087414

Formerly Utilized Sites Remedial Action Program (FUSRAP)
Contract No. DE-AC05-91OR21949

ADDENDUM TO THE HAZARD ASSESSMENT FOR RADIOACTIVE CONTAMINATION IN AND BENEATH CERTAIN BUILDINGS AT THE ALBANY RESEARCH CENTER

Albany, Oregon

March 1992

087414

ADDENDUM TO THE HAZARD ASSESSMENT FOR RADIOACTIVE CONTAMINATION IN AND BENEATH CERTAIN BUILDINGS AT THE ALBANY RESEARCH CENTER ALBANY, OREGON

MARCH 1992

Prepared for

United States Department of Energy

Oak Ridge Field Office

Under Contract No. DE-AC05-91OR21949

By

Bechtel National, Inc.

Oak Ridge, Tennessee

Bechtel Job No. 14501

CONTENTS

	Page
Figures	iv
Tables	iv
Acronyms	v
Units of Measure	v
1.0 INTRODUCTION	1
1.1 OBJECTIVE AND SCOPE	1
1.2 BACKGROUND	2
1.3 ASSUMPTIONS FOR DOSE CALCULATIONS	5
1.4 CONCLUSIONS	5
2.0 BUILDING ASSESSMENTS	8
2.1 BUILDING 23	8
2.1.1 Contaminated Pipes and Sumps	8
2.1.2 Main Collection Drain	11
2.1.3 Trenches 1, 2, and 18	12
2.1.4 Transformer Room Drain	12
2.2 BUILDING 30	14
2.2.1 Hydraulic Press	14
2.2.2 Baldwin Press	14
2.2.3 Lindberg Furnace	18
REFERENCES	20

FIGURES

Figure	Title	Page
1-1	Albany Research Center	4
2-1	Basement of Building 23	9
2-2	Detail of Pipes and Sumps in Basement of Building 23	10
2-3	First Floor of Building 23	13
2-4	Locations of Equipment in Building 30 Fabrication Room	15
2-5	Hydraulic Press in Fabrication Room	16
2-6	Baldwin Press in Fabrication Room	17
2-7	Lindberg Furnace in Fabrication Room	19

TABLES

Table	Title	Page
1-1	Cost-Effectiveness of Remedial Action in Buildings 23 and 30	3
1-2	Estimated External Gamma and Inhalation Doses to Present and Future Workers in Buildings 23 and 30	7

ACRONYMS

AEC	Atomic Energy Commission
ANL	Argonne National Laboratory
ARC	Albany Research Center
BNI	Bechtel National, Inc.
DOE	Department of Energy
ERDA	Energy Research and Development Administration
FUSRAP	Formerly Utilized Sites Remedial Action Program
MED	Manhattan Engineer District

UNITS OF MEASURE

cm	centimeter
dpm	disintegrations per minute
ft	foot
g	gram
in.	inch
m	meter
mrem	millirem
pCi	picocurie
yr	year

1.0 INTRODUCTION

This addendum presents the findings of hazard assessment activities conducted after September 1989 in Buildings 23 and 30 at the Albany Research Center (ARC) in Albany, Oregon. The work addressed additional areas of residual radioactive contamination identified in these two buildings during remedial action conducted at the site in 1990 and 1991 under the Formerly Utilized Sites Remedial Action Program (FUSRAP). The objective of FUSRAP, which is managed by the U.S. Department of Energy (DOE), is to identify and clean up or otherwise control sites where residual radioactive contamination (exceeding current guidelines) remains from the early years of the nation's atomic energy program or from commercial operations causing conditions that Congress has authorized DOE to remedy.

The report contains an assessment of the risks of potential exposure in these areas, describes the methodology used to estimate these potential exposures, and provides cost estimates for remediating the areas.

DOE protocol provides for the release of property without radiological restrictions in cases where residual radioactive contamination, although it may exceed generic guidelines, does not pose a potential risk of present or future exposure and where the cost of remedial action is unreasonably high relative to the long-term benefits (DOE 1986). With regard to the residual radioactive contamination in Buildings 23 and 30, the application of supplemental limits does not pose an undue risk to workers or members of the general public.

1.1 OBJECTIVE AND SCOPE

The objectives of this additional hazard assessment were to evaluate the risks associated with residual radioactive contamination in Buildings 23 and 30 and to estimate the cost of remediation.

The areas requiring further assessment in Building 23 are contaminated pipes and sumps beneath the stairway to the basement; the main collection drain in the basement; trenches 1, 2, and 18 beneath the floors of Laboratories 1 and 2; and the drain in the transformer room. The radioactive contamination in Building 30 is on inaccessible areas of the hydraulic press, the Baldwin press, and the Lindberg furnace in the fabrication room. Table 1-1 summarizes the estimated cost of remedial action and the cost per millirem of avoided dose for each contaminated area.

1.2 BACKGROUND

During Manhattan Engineer District/Atomic Energy Commission (MED/AEC) activities, work involving radioactive materials was performed at ARC. From 1954 to 1956 and from 1960 to 1971, operations involved melting, machining, welding, and producing thorium alloys. From 1955 to 1978, under contract to AEC and, subsequently, the Energy Research and Development Administration (ERDA), operations also included research on alloys of uranium and thorium (ANL 1983a). AEC/ERDA activities were terminated in 1978. Although some work with ores containing radioactive constituents continues at ARC, no work is currently performed under contract to DOE.

Records indicate that as AEC/ERDA activities were terminated, structures were released without radiological restriction in accordance with guidelines existing at the time (ANL 1983a). However, surveys conducted by DOE in 1982 established that radioactive contamination in excess of current DOE guidelines was present in several areas of the site (ANL 1983a, 1983b). A follow-up radiological survey performed in 1984 to define the locations and boundaries of the radioactive contamination indicated that the major contaminants at ARC were thorium-232 and its decay products (BNI 1985).

In 1987, remedial action was performed on the grounds and in Buildings 2, 4, 5, 17, 19, 23, 27, 28, 29, 30, and 31 (Figure 1-1). Activities in the buildings included decontaminating surfaces of

Table 1-1

Cost-Effectiveness of Remedial Action in Buildings 23 and 30

Building	Location	Total Estimated Cost ($)[a,b]	Unit Cost ($/mrem/yr)[b]
23	Contaminated sumps and pipes in basement	250,000	4.6×10^9
23	Main collection drain	51,584	1.4×10^9
23	Trenches 1, 2, and 18	30,972	1.3×10^8
23	Transformer room drain	11,800	2.1×10^7
30	Hydraulic press	--[c]	--[c]
30	Baldwin press	300,000	9.0×10^8
30	Lindberg furnace	100,000	1.9×10^9

[a]Excludes cost of lost productivity during remedial action.

[b]In FY 1991 dollars.

[c]Cost could not be estimated because replacement parts are not available.

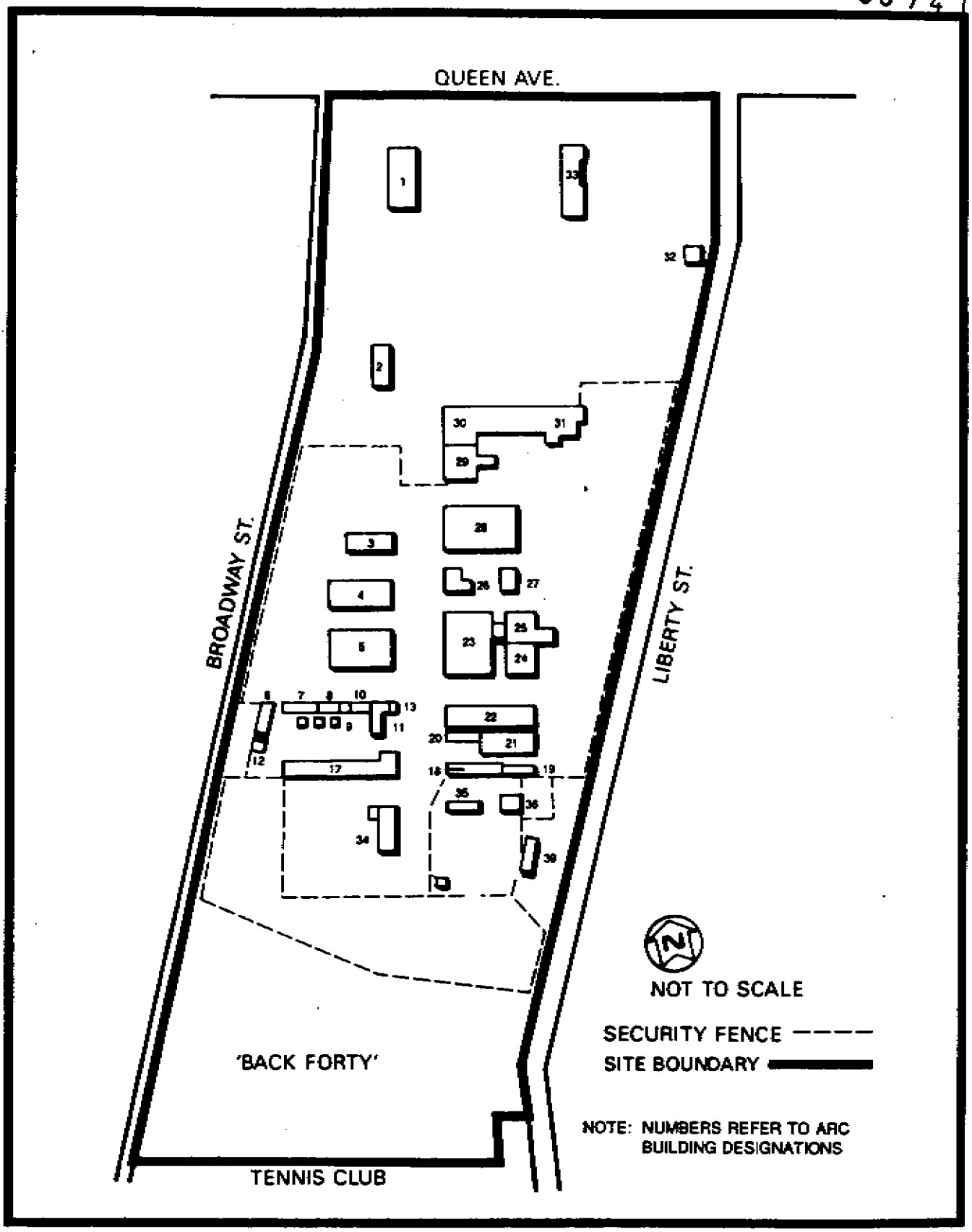

FIGURE 1-1 ALBANY RESEARCH CENTER

floors, walls, structural members, and contaminated equipment. Radioactively contaminated soil was removed, and the excavated areas were restored. Remedial action resulted in the release of three buildings (Buildings 2, 19, and 27) without radiological restrictions.

A follow-up characterization of the buildings in 1987 indicated that radioactive contamination exceeding applicable DOE guidelines was present in additional areas of 15 buildings (BNI 1989a). Data from that characterization were the basis for a hazard assessment of radioactively contaminated areas in 6 of the 15 buildings (Buildings 4, 17, 28, 29, 30, and 31) (BNI 1989b).

In August 1990, remedial action was initiated to address the remaining radioactively contaminated areas identified during the 1987 characterization. In addition to the contaminated areas in the buildings, a lime pit east of Building 30 and four areas of radioactively contaminated asphalt in the parking lots near Buildings 27, 29, and 31 were included in the remedial action. Remediation of all areas of residual radioactive contamination was completed in April 1991, with the exception of the areas in Buildings 23 and 30 that are the subject of this report.

1.3 ASSUMPTIONS FOR DOSE CALCULATIONS

The potential external gamma dose and internal inhalation exposure sustained by a hypothetical individual worker have been calculated for each area addressed in this assessment. The calculations are based on the assumption that an individual works 1 m (3.3 ft) from the area containing the highest level of residual contamination for 40 hours a week for a year.

1.4 CONCLUSIONS

Conservative techniques were used to calculate the annual dose currently received by a hypothetical worker in Building 23 or Building 30 and to calculate the potential inhalation dose to a worker involved in building demolition in the future. The results

of these calculations show that potential present or future exposure to residual radioactive contamination in the buildings would be well below 100 mrem/yr, which is the DOE standard for protection of the general public. Table 1-2 presents the estimated potential external gamma and inhalation doses received by workers in the buildings.

Results of these calculations show that supplemental limits are warranted for the areas assessed in Buildings 23 and 30. Leaving the residual radioactive material in place does not pose a potential present or future exposure risk, and the cost of remedial action is high relative to the long-term benefits that would be derived.

Table 1-2

Estimated External Gamma and Inhalation Doses to Present and Future Workers in Buildings 23 and 30

Radiation Source	Contamination Levels from Which Dose Rates Are Calculated (dpm/100 cm^2)[a]	Present Worker[b] External Gamma Dose (mrem/yr)	Future Worker[c,d] Inhalation Dose (mrem)
Building 23			
Contaminated sumps and pipes in basement	80,000[e]	5.47×10^{-5}	0.932
Main collection drain	488[e]	3.58×10^{-5}	0.051
Trenches 1, 2, and 18	2,800[e]	2.48×10^{-4}	0.356
Transformer room drain	367.4[f]	5.61×10^{-4}	0.050
Building 30			
Hydraulic press	14,212[e]	1.46×10^{-4}	0.160
Baldwin press	85,500[e]	3.34×10^{-4}	0.080
Lindberg furnace	13,435[e]	5.25×10^{-5}	0.076

[a]Background values were subtracted from measured values.

[b]It is assumed that a worker spends 40 hours per week at a distance of 1 m (3.3 ft) from the maximum contamination level found in the area assessed.

[c]Conservative doses were estimated assuming that the future worker spends all of the demolition time enshrouded in a particulate cloud composed entirely of contaminated material.

[d]The inhalation dose is estimated for the cumulative exposure resulting from demolition of all areas within a building covered in this assessment.

[e]A Geiger-Mueller probe was used for these measurements.

[f]The dose is based on laboratory analysis.

2.0 BUILDING ASSESSMENTS

Hazard assessment activities described in this section were conducted in seven areas of residual radioactive contamination in Buildings 23 and 30. Included with the description of each contaminated area are an estimated potential external dose to a hypothetical worker near the source and an estimated inhalation dose to a hypothetical worker involved in demolition of the contaminated area.

2.1 BUILDING 23

Four areas in Building 23 are addressed in this addendum: (1) contaminated pipes and sumps in the floor beneath the southwest stairway to the basement; (2) the main collection drain in the basement; (3) trenches 1, 2, and 18 in Laboratories 1 and 2; and (4) the drain located in the transformer room.

2.1.1 Contaminated Pipes and Sumps

The locations of the contaminated pipes and sumps are shown in Figures 2-1 and 2-2. The pipes, located within two sumps, are of cast iron. The 10-cm- (4-in.-) diameter pipe in the large sump has been broken; it is assumed that this pipe was originally connected to the pipe located in the small sump. After exiting the sumps, the pipe enters a "T" fitting and is believed to exit to the local sewer system. The highest measured level of fixed beta/gamma contamination on the pipe was 80,000 dpm/100 cm^2.

The potential dose of penetrating radiation from the pipes in the basement sumps was estimated by choosing the highest instrument reading and applying it to the entire basement of Building 23. The potential external dose to a worker in the basement is 5.47×10^{-5} mrem/yr, or less than 0.01 percent of the DOE annual radiation protection standard.

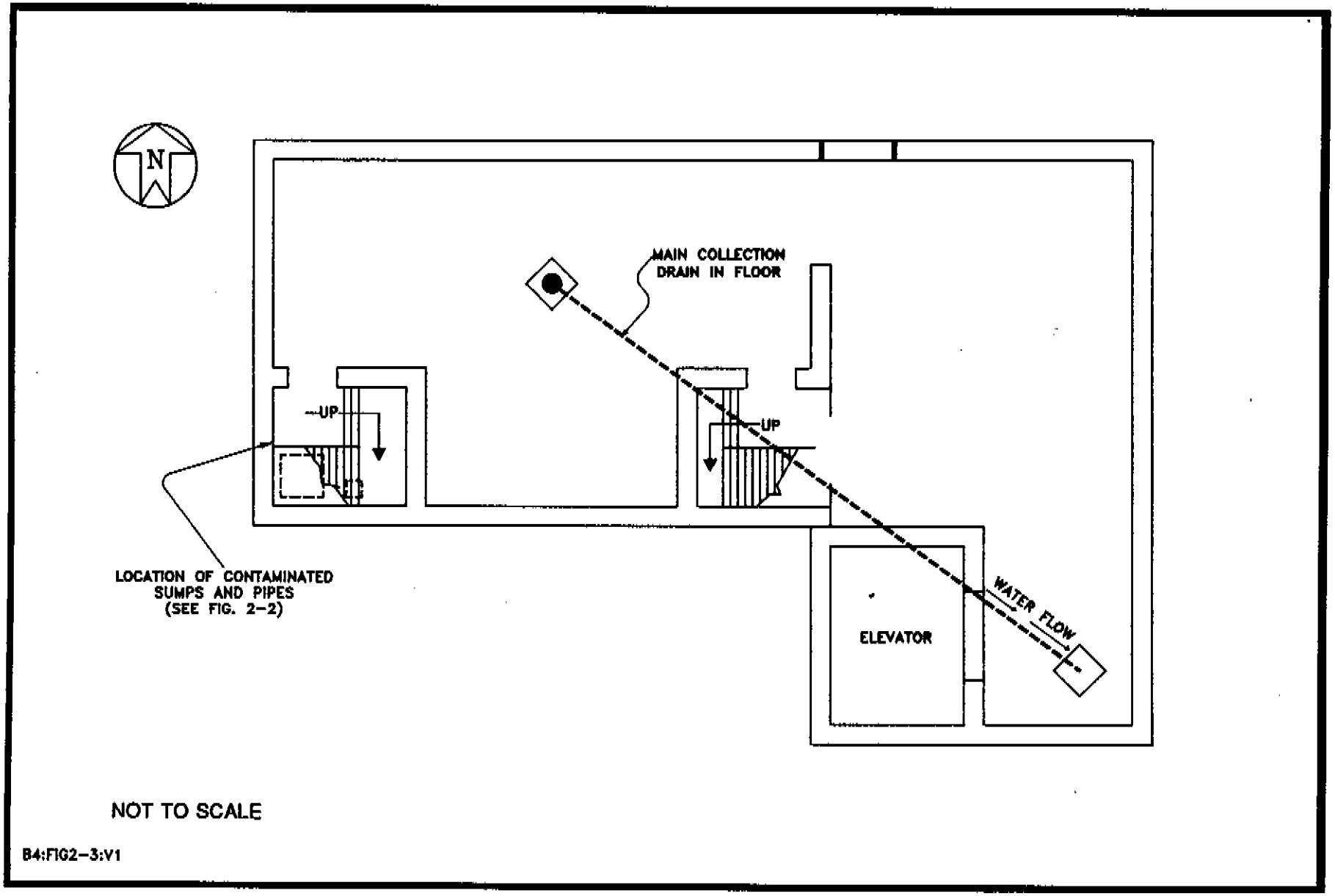

FIGURE 2-1 BASEMENT OF BUILDING 23

087414

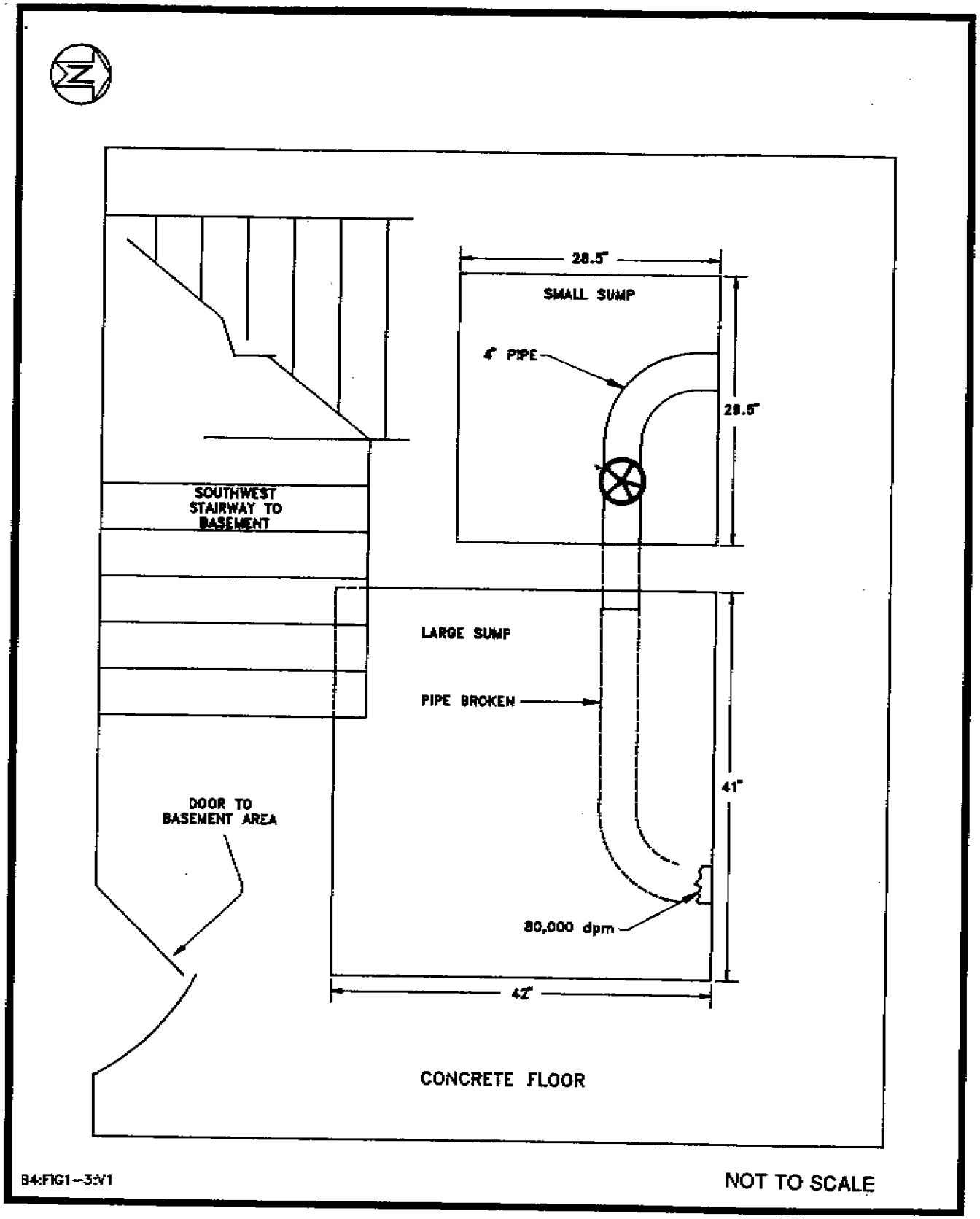

FIGURE 2-2 DETAIL OF PIPES AND SUMPS IN BASEMENT OF BUILDING 23

The estimated inhalation dose to an individual resulting from airborne particulates inhaled while removing the sumps and pipes is 0.932 mrem. The calculated specific activity of the contaminated material is 400 pCi/g.

2.1.2 Main Collection Drain

The main collection drain in the basement of Building 23 (see Figure 2-1) collects liquid from the entire basement for discharge to the local sewer line. The drain is located beneath a reinforced concrete floor and extends southeastward under the building. Because direct measurements of radioactive contamination inside the pipe could not be taken without removing part of the concrete floor, instrument readings at contact with the drain were used for calculating potential exposure rates. The highest level of beta/gamma contamination measured on the surface of the drain was 488 dpm/100 cm^2.

The external gamma radiation dose to a worker during removal of the radioactively contaminated drain in the basement of Building 23 was calculated based on the highest level of contamination measured 1 cm (0.4 in.) from the surface of the drain. Based on this reading (448 dpm/100 cm^2) and assuming that contamination is distributed throughout the drain, the external gamma radiation dose is 3.58×10^{-5} mrem/yr, which is less than 0.01 percent of the DOE annual radiation protection standard.

The estimated inhalation dose to a worker during removal of the drain, based on instrument readings at the surface of the drain, is 0.051 mrem. This exposure estimate may be high because the actual extent of contamination could not be determined; therefore, the entire pipe was assumed to be contaminated. The calculated specific activity is 2.44 pCi/g.

2.1.3 Trenches 1, 2, and 18

Trenches 1, 2, and 18 are beneath Laboratories 1 and 2, which are located on the first floor of Building 23. The trenches are of

concrete and contain pipes and conduits that branch out to locations throughout the building (Figure 2-3). Most of the trenches are located beneath Laboratory 2 and cannot be accessed without extensive damage to the laboratory floor. The northern section of trench 1 has been decontaminated to below-guideline levels. The highest level of fixed beta/gamma contamination measured in the trenches was 2,800 dpm/100 cm^2.

The estimated external gamma dose received by a person working 1 m (3.3 ft) from trench 1, 2, or 18 is 2.48×10^{-4} mrem/yr. This dose is only 0.0002 percent of the DOE annual radiation protection standard.

The estimated inhalation dose to an individual during the demolition of trenches 1, 2, and 18 is 0.356 mrem. This dose, based on a specific activity of 14 pCi/g, is 0.13 percent of the average estimated background dose in the United States.

2.1.4 Transformer Room Drain

The floor drain in the transformer room of Building 23 (see Figure 2-3) is encapsulated in concrete; it empties into trench 7, which runs directly beneath the concrete floor of the room. Direct beta/gamma measurements of the floor drain could not be obtained without causing extensive damage to the floor and posing an electrical hazard from high-voltage lines. Therefore, the analytical results for a thorium-contaminated sludge sample removed from the drain were used for the risk calculation. The thorium-232 concentration in the sludge sample was 367.4 pCi/g; the concentration in the material remaining in the drain was assumed to be the same as the concentration in the sample.

The penetrating gamma radiation dose from the drain in the transformer room is 5.61×10^{-4} mrem/yr. This dose is less than 0.01 percent of the DOE annual radiation protection standard.

The maximum annual inhalation exposure that an individual would receive during removal of the drain in the floor of the transformer room would be 0.050 mrem, based on the assumption that the specific activity of the contaminated material is 367.4 pCi/g.

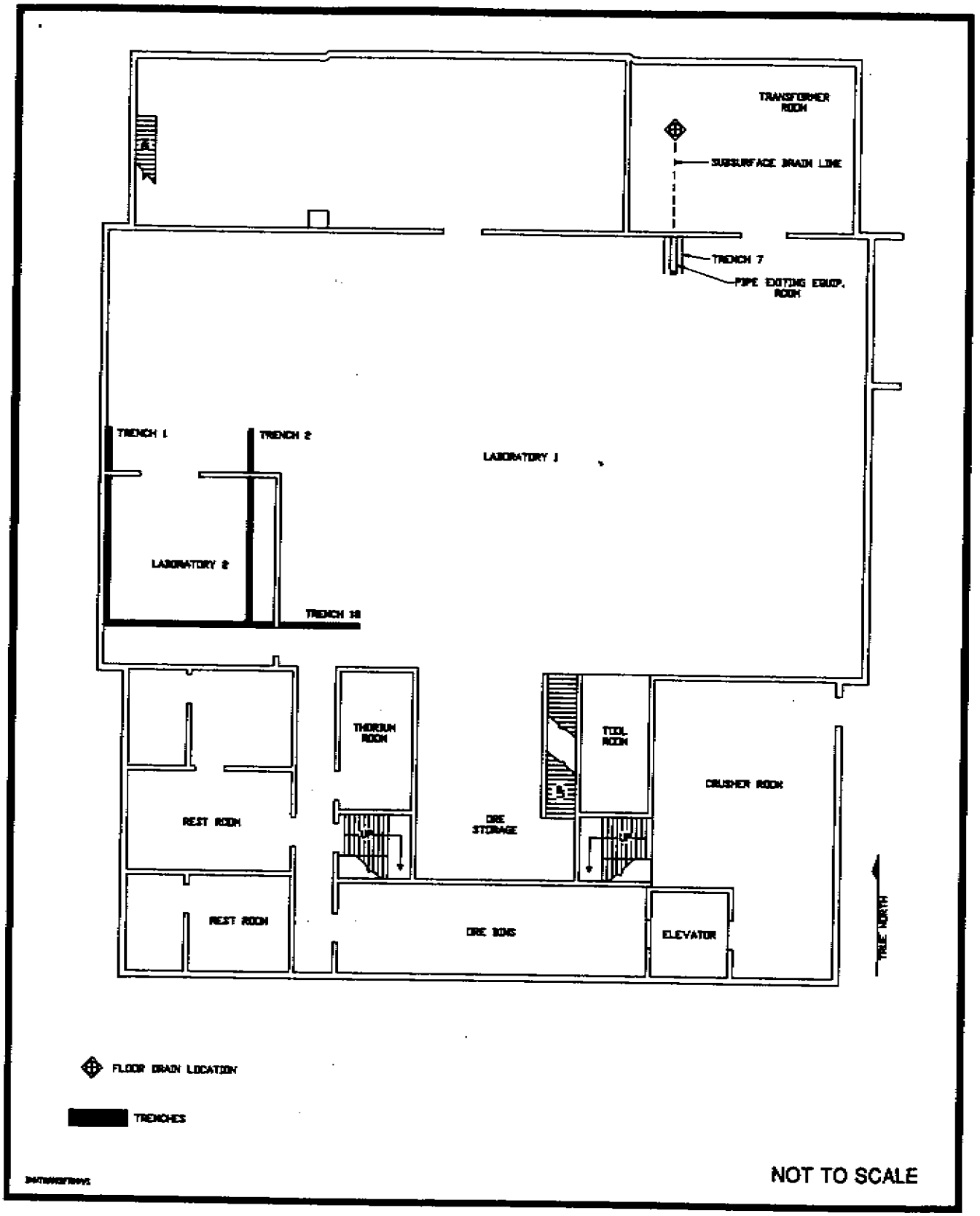

FIGURE 2-3 FIRST FLOOR OF BUILDING 23

2.2 BUILDING 30

Contaminated areas on three pieces of equipment in the fabrication room of Building 30 are addressed in this addendum: (1) the hydraulic press, (2) the Baldwin press, and (3) the Lindberg furnace. Figure 2-4 shows the locations of this equipment.

2.2.1 Hydraulic Press

The hydraulic press (Figure 2-5) is a large piece of equipment that has been in service for more than 40 years. All removable contamination has been removed from the accessible areas of the press and adjoining catwalk. The fixed contamination is located at the base of the press and beneath the catwalk in areas that are not accessible without damaging the press. To partially survey these areas, detectors were disassembled and reassembled inside the contaminated areas. The highest level of residual radioactive contamination measured was 14,212 dpm/100 cm^2.

The potential external gamma dose to an individual working 1 m (3.3 ft) from the area of contamination inside the hydraulic press is 1.46×10^{-4} mrem/yr, which is considerably less than 0.01 percent of the DOE radiation protection standard.

The potential annual inhalation dose to a hypothetical worker demolishing the hydraulic press, based on a specific activity of 71 pCi/g, is 0.160 mrem.

2.2.2 Baldwin Press

The Baldwin press (Figure 2-6) is a smaller version of the large hydraulic press. The large bolts and plates located on the top and base of the press could not be remediated without possible damage to the press. All removable contamination was removed, leaving only a few small areas of contamination. The highest level of beta/gamma contamination remaining on the press is 85,500 dpm/100 cm^2.

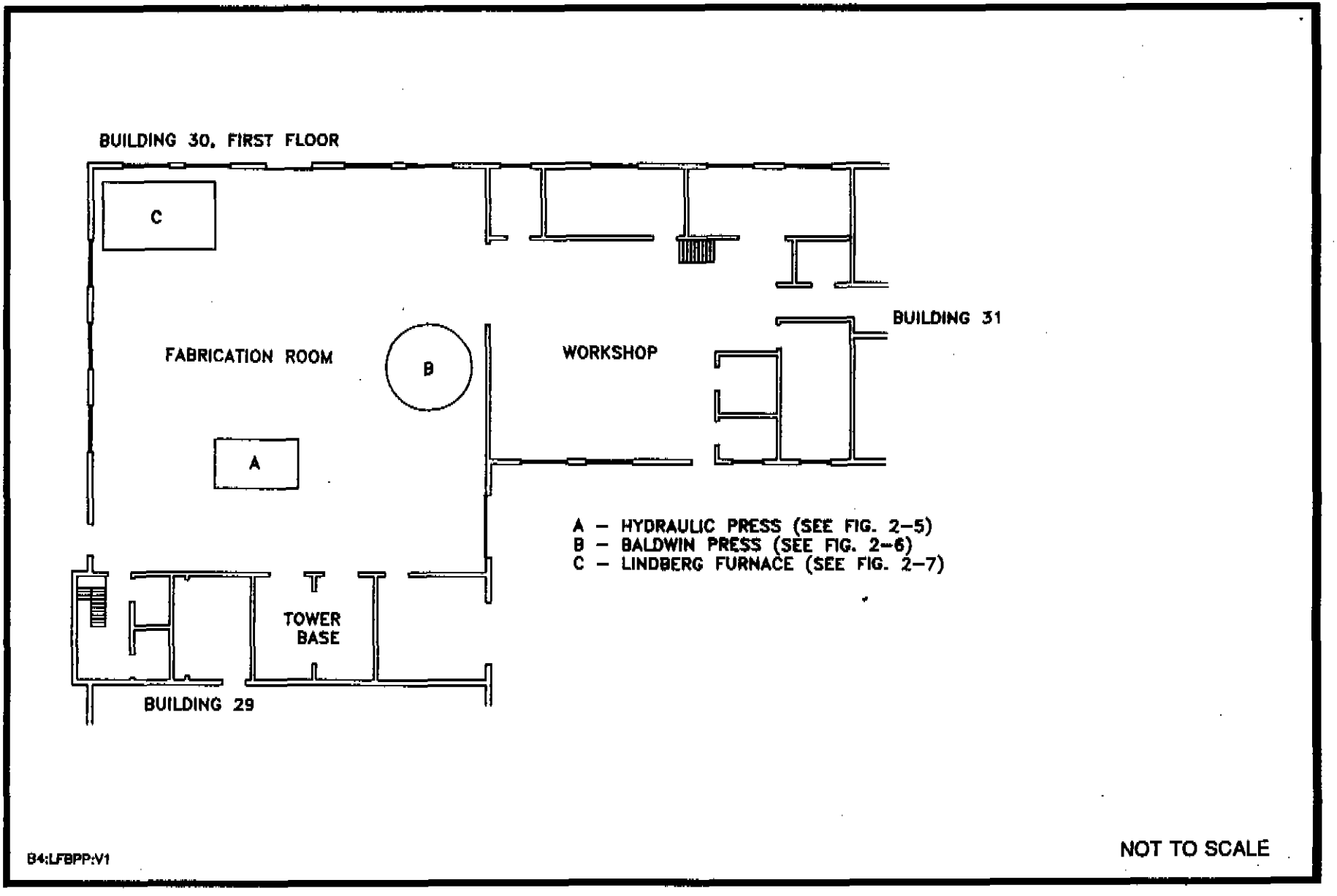

FIGURE 2-4 LOCATIONS OF EQUIPMENT IN BUILDING 30 FABRICATION ROOM

087414

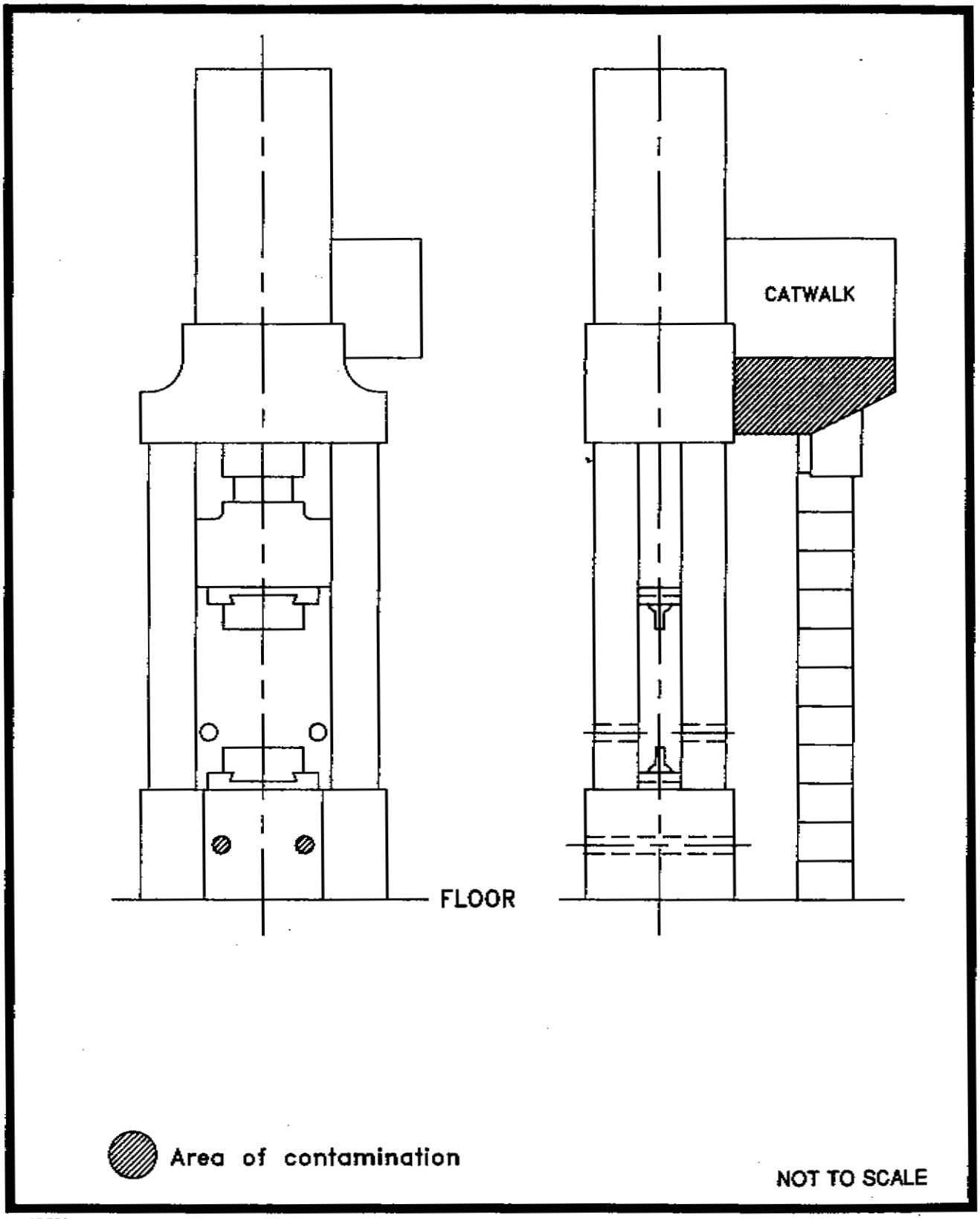

B4:PRESS:V1

FIGURE 2-5 HYDRAULIC PRESS IN FABRICATION ROOM

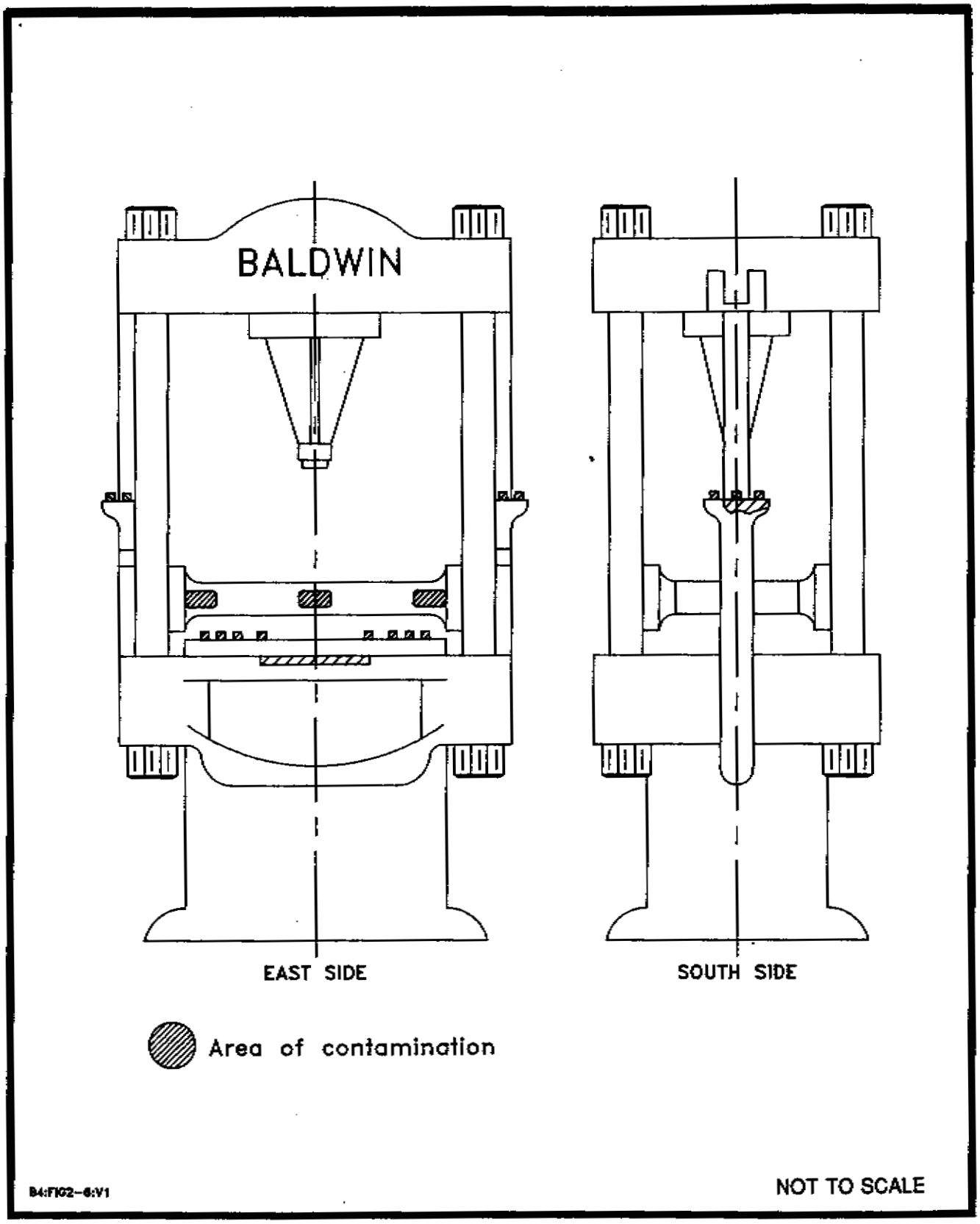

FIGURE 2-6 BALDWIN PRESS IN FABRICATION ROOM

The estimated external gamma dose received by an individual at a distance of 1 m (3.3 ft) from the area of highest contamination on the Baldwin press is 3.34×10^{-4} mrem/yr. This dose is less than 0.01 percent of the DOE radiation protection standard.

The estimated inhalation dose to a worker demolishing or renovating the press is 0.080 mrem. The calculated specific activity of the contaminated material is 427.8 pCi/g.

2.2.3 Lindberg Furnace

The Lindberg furnace (Figure 2-7) is a large open furnace that is to be used in future activities at ARC. The interior of the furnace contained radioactively contaminated asbestos, which was removed by qualified technicians.

The fixed contamination is located on two large steel pulleys or wheels and on the inside walls of the furnace in areas that are inaccessible without possible damage to the furnace. The highest level of fixed beta/gamma contamination is 13,435 dpm/100 cm^2.

An individual working 1 m (3.3 ft) from the highest level of contamination on the Lindberg furnace would receive a total dose of 5.25×10^{-5} mrem/yr. This exposure is less than 0.01 percent of the DOE radiation protection standard.

The annual inhalation exposure that an individual would receive while dismantling or remediating the furnace would be 0.076 mrem. The calculated specific activity of the contaminated areas is 67.22 pCi/g.

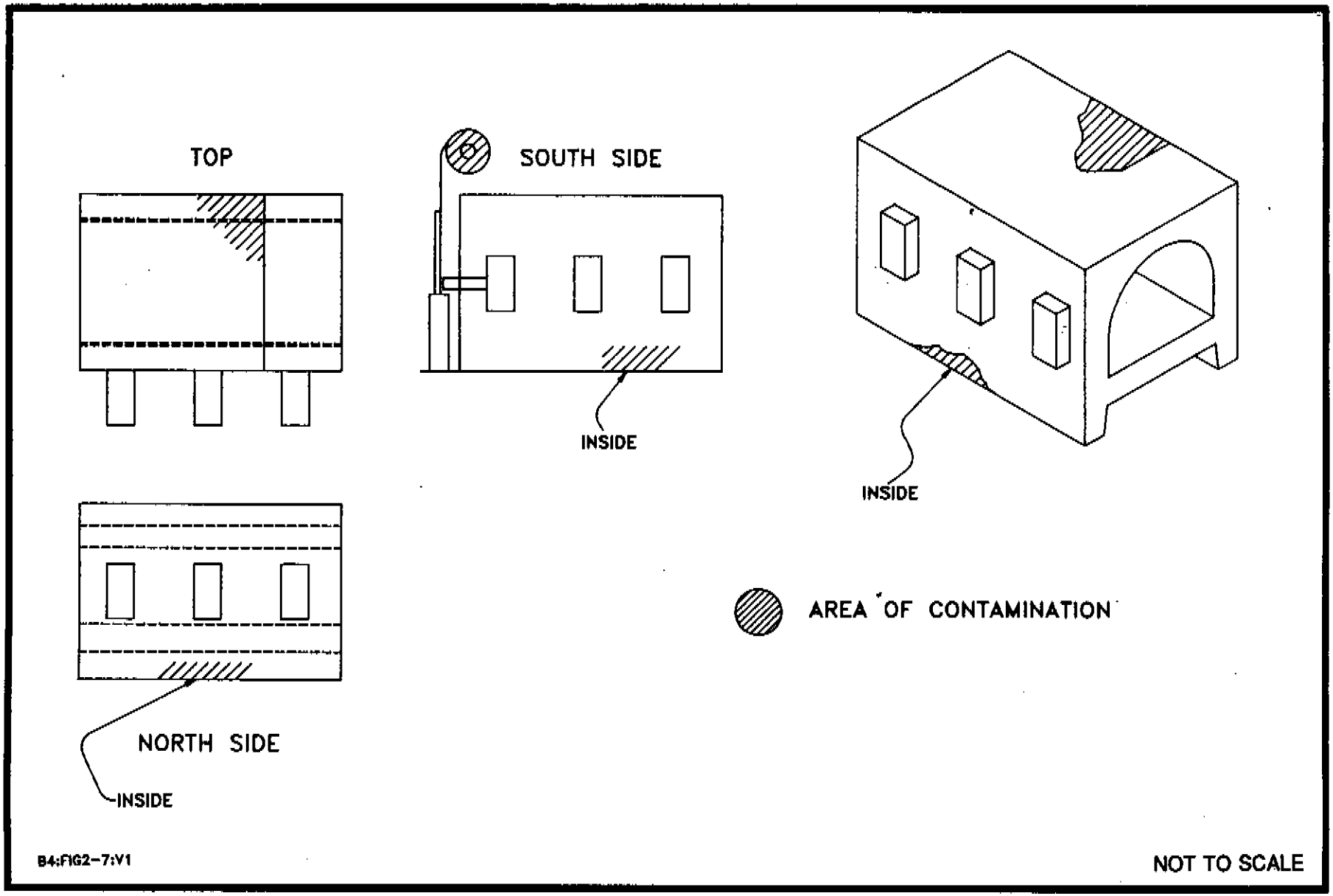

FIGURE 2-7 LINDBERG FURNACE IN FABRICATION ROOM

087414

REFERENCES

Argonne National Laboratory (ANL), 1983a. Formerly Utilized MED/AEC Remedial Action Program, Radiological Survey of the Albany Metallurgical Research Center, United States Bureau of Mines, Albany, Oregon, DOE/EV-0005/40, Argonne, Ill. (June).

ANL, 1983b. Formerly Utilized MED/AEC Remedial Action Program, Radiological Survey of the Albany Metallurgical Research Center, United States Bureau of Mines, Biomass Facility and the "Back Forty" Area, Albany, Oregon, DOE/EV-0005/39, Argonne, Ill. (June).

Bechtel National, Inc., (BNI), 1985. Radiological Survey of the Albany Research Center, Albany, Oregon, DOE/OR/20722-29, Oak Ridge, Tenn. (January).

BNI, 1989a. Radiological Characterization Report for the Albany Research Center, Albany, Oregon, DOE/OR20722-204, Oak Ridge, Tenn. (April).

BNI, 1989b. Hazard Assessment for Radioactive Contamination in and Beneath Certain Buildings at the Albany Research Center, Albany, Oregon, Contract No. DE-AC05-81OR20722, Oak Ridge, Tenn. (September).

U.S. Department of Energy (DOE), 1986. Formerly Utilized Sites Remedial Action Program, Summary Protocol, Identification - Characterization - Designation - Remedial Action - Certification, Washington, D.C. (January).

087414

Bechtel

Oak Ridge Corporate Center
151 Lafayette Drive
P.O. Box 350
Oak Ridge, Tennessee 37831-0350

Facsimile: (615) 220-2100

Job No. 14501, FUSRAP Project
DOE Contract No. DE-AC05-91OR21949
Code: 7340/WBS: 102

U.S. Department of Energy
Oak Ridge Field Office
P.O. Box 2001
Oak Ridge, TN 37831-8723

Attention: David G. Adler, Site Manager
Former Sites Restoration Division

Subject: Addendum to the Hazard Assessment for Radioactive Contamination in and Beneath Certain Buildings at the Albany Research Center

Dear Mr. Adler:

Enclosed are six copies of the subject document. The document has been revised to reflect comments received during review of the second draft and is ready for submittal to DOE-HQ for approval. Also enclosed are a draft memorandum transmitting the document from you to DOE-HQ and a disk containing the memorandum.

This document was prepared under my direction or supervision in accordance with a system designed to ensure that the information submitted was properly gathered and evaluated. To the best of my knowledge and belief it is true, accurate, and complete.

Very truly yours,

G. L. Palau, Project Manager
FUSRAP

GLP:bjb:LR_0540

Enclosures: As stated

Concurrence: A. M. Feldman
K. C. Noey @

cc: J. Berger (ORAU)

Bechtel National, Inc.

087414

United States Government

Department of Energy

Oak Ridge Operations

memorandum

DATE:

REPLY TO
ATTN OF: EW-93

SUBJECT: **APPROVAL OF THE ADDENDUM TO THE HAZARD ASSESSMENT FOR ALBANY RESEARCH CENTER**

TO: James W. Wagoner, II, Director, Division of Off-Site Programs, Office of Eastern Area Programs, Office of Environmental Restoration, EM-421, DOE-GTN

Attached are four copies of the subject document for approval by HQ. This hazard assessment provides the necessary documentation of the analysis supporting the decision to make limited use of supplemental cleanup guidelines at ARC during the 1991 remedial action. In accordance with the walkdown of the site that we made at the time of remedial action, the supplemental limits were used for six areas in which efforts to achieve standard cleanup guidelines would have been prohibitively expensive. In no case does the dose to current or future ARC workers from the residual contamination exceed the DOE exposure limit of 100 mrem/year -- in fact, in all cases the dose is significantly lower than this guideline limit.

In order to support preparation of the certification docket for ARC, it is requested that the hazard assessment be approved by April 30, 1992.

If you have any questions regarding the hazard assessment, please call me.

David G. Adler, Site Manager
Former Sites Restoration Division

Attachment