141-3ØR-VØ3-ØØ1

DOE/OR/21949-397

Formerly Utilized Sites Remedial Action Program (FUSRAP)
Contract No. DE-AC05-91-OR21949

Post-Remedial Action Report for the Remedial Action at the General Motors Site

Adrian, Michigan

March 1997

Printed on recycled/recyclable paper.

DOE/OR/21949-397

POST-REMEDIAL ACTION REPORT

FOR THE

REMEDIAL ACTION AT THE GENERAL MOTORS SITE

ADRIAN, MICHIGAN

MARCH 1997

Prepared for

United States Department of Energy

Oak Ridge Operations Office

Under Contract No. DE-AC05-91OR21949

By

Bechtel National, Inc.

Oak Ridge, Tennessee

Bechtel Job No. 14501

CONTENTS

Page

FIGURES iv

TABLES v

ACRONYMS vi

UNITS OF MEASURE vii

1.0 INTRODUCTION 1
- 1.1 BACKGROUND 1
- 1.2 HISTORY 4
- 1.3 SITE DESCRIPTION 6

2.0 REMEDIAL ACTION GUIDELINES 9

3.0 REMEDIAL ACTION 11
- 3.1 CLEANUP/DECONTAMINATION ACTIVITIES 11
- 3.2 CONTAMINATION CONTROL DURING THE CLEANUP 19

4.0 POST-REMEDIAL ACTION MEASUREMENTS 21

5.0 POST-REMEDIAL ACTION STATUS 30

REFERENCES 31

GLOSSARY 32

APPENDIX A CHARACTERIZATION OF RADIOACTIVE CONTAMINATION INSIDE PIPES WITH THE PIPE EXPLORER™ SYSTEM A-1

APPENDIX B WASTE MANAGEMENT SUMMARY B-1

FIGURES

Figure	Title	Page
1-1	General Motors Site Location Map	2
1-2	General Motors Plant, Adrian, Michigan, Site Plan	3
1-3	Former Extrusion Pits with Associated Drainage System	5
1-4	Piping System Designated for Remedial Action with Post-Remedial Action Status	7
3-1	Typical Section Through Pipe Chase Before Remedial Action	12
3-2	Typical Manhole Before Remedial Action	14
3-3	Forty-Two-Inch Sump Before Remedial Action	15
3-4	Sump 3 Before Remedial Action	16
3-5	Oil Trap Before Remedial Action	17
4-1	Post-Remedial Action Survey Locations for Sump 3	22
4-2	Typical Remedial Action Survey Locations for the Sump 3 Oil Trap	23
4-3	Typical Post-Remedial Action Survey Locations for the Remediated Manholes	24

TABLES

Table	Title	Page
2-1	Summary of DOE Guidelines for Residual Radioactive Contamination	10
3-1	Post-Remedial Action Status of the Piping System at the General Motors Site	18
4-1	Post-Remedial Action Survey Results for the Drain Lines at the General Motors Site	26
4-2	Post-Remedial Action Survey Results for Other Components at the General Motors Site	27

ACRONYMS

ACM	asbestos-containing material
AEC	U.S. Atomic Energy Commission
ALARA	as low as reasonably achievable
BNI	Bechtel National, Inc.
CLSM	controlled low-strength material
DCG	derived concentration guide
DOE	U.S. Department of Energy
EPA	Environmental Protection Agency
ERDA	Energy Research and Development Administration
FUSRAP	Formerly Utilized Sites Remedial Action Program
GM	General Motors Corporation
IVC	independent verification contractor
LLRW	low-level radioactive waste
LSA	low-specific-activity
MDA	minimum detectable activity
MED	Manhattan Engineer District
NRC	Nuclear Regulatory Commission
ORNL	Oak Ridge National Laboratory
PPE	personal protective equipment
RSS	radiological support subcontractor
SAIC	Science Applications International Corporation, Inc.
SEA	Science and Engineering Associates
TN	Thermo NUtech

UNITS OF MEASURE

cm	centimeter
cpm	counts per minute
dpm	disintegrations per minute
ft	foot
g	gram
gal	gallon
h	hour
ha	hectare
in.	inch
lb	pound
m	meter
µCi	microcurie
ml	milliliter
µR	microroentgen
mrad	millirad
mrem	millirem
od	outer diameter
pCi	picocurie
psi	pounds per square inch
yd	yard
yr	year

1.0 INTRODUCTION

1.1 BACKGROUND

This report documents the remedial action conducted at the General Motors Inland Fisher Guide Division site (GM site) (former Bridgeport Brass Company Special Metals Extrusion Plant) in Adrian, Michigan (Figures 1-1 and 1-2). Remediation activities were performed from April to July 1995 under the authority of the U.S. Department of Energy (DOE) mandated by the Atomic Energy Act of 1954 and subsequent related legislation (BNI 1995).

Remediation activities at the site were performed as part of the DOE Formerly Utilized Sites Remedial Action Program (FUSRAP) following the protocols and procedures established by DOE. FUSRAP was established to identify and clean up or otherwise control sites where residual radioactive contamination (exceeding current federal guidelines) remains from the early years of the nation's atomic energy program or from commercial operations causing conditions that Congress has authorized DOE to remedy.

The objectives of FUSRAP as applied to the GM site are to

- identify and evaluate all sites used to support former Manhattan Engineer District (MED) and Atomic Energy Commission (AEC) nuclear development activities;
- remove or otherwise control contamination on sites identified as contaminated above current DOE guidelines;
- achieve and maintain compliance with applicable criteria for the protection of human health and the environment;
- certify the site, to the extent possible, for use without radiological restrictions after remediation; and
- remove hazardous waste that is mixed with radioactively contaminated waste resulting from MED/AEC-related work.

FUSRAP was established in 1974, and major remedial actions began at FUSRAP sites in 1981. Administered by the Former Sites Restoration Division of DOE's Office of Environmental Management, FUSRAP currently includes 46 sites in 14 states.

Bechtel National, Inc. (BNI) is the project management contractor for DOE. Science Applications International Corporation (SAIC), the environmental studies contractor, conducted a hazard assessment for the site. Oak Ridge National Laboratory (ORNL), the FUSRAP independent verification contractor (IVC),

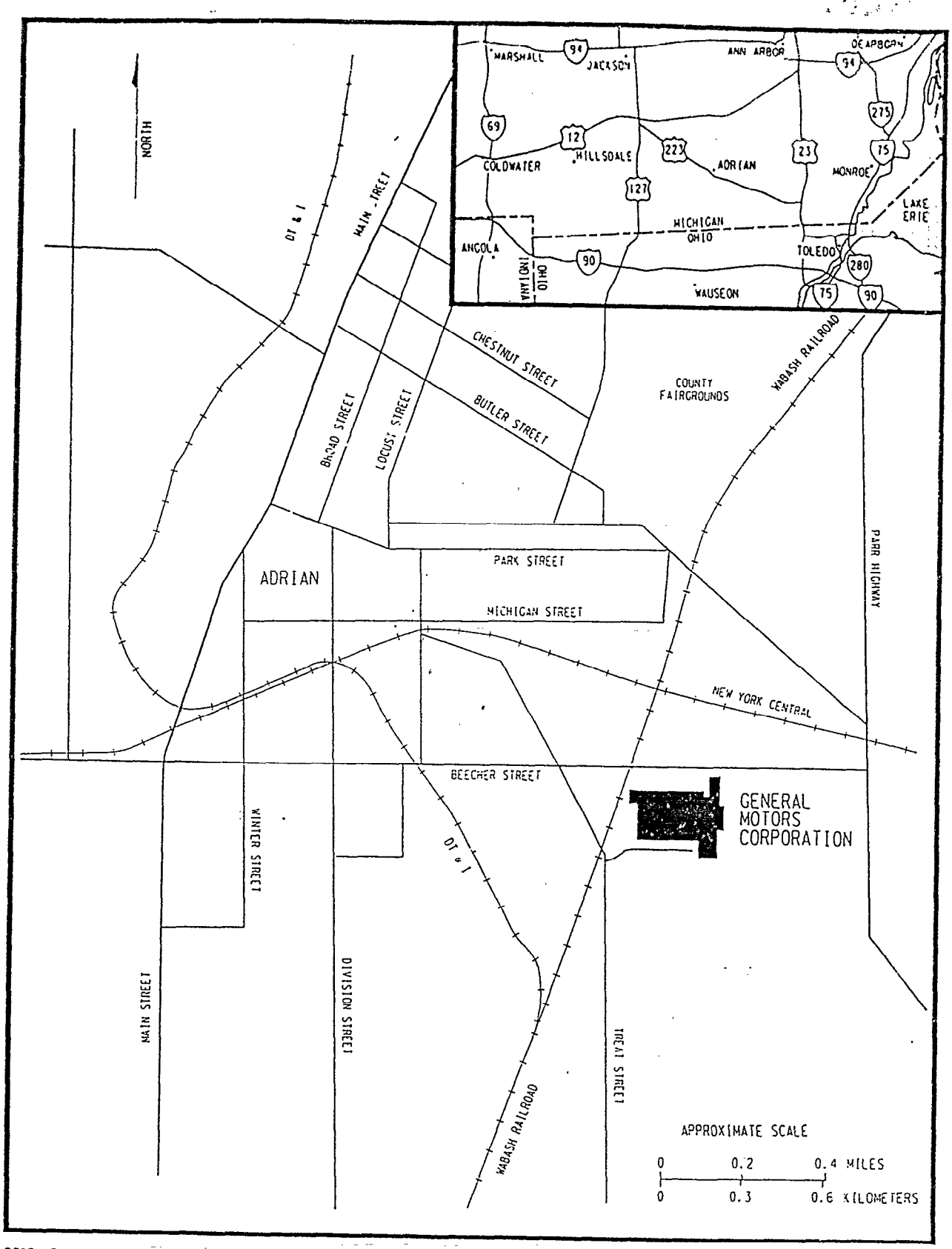

R78F015.DGN

Figure 1-1
General Motors Site
Location Map

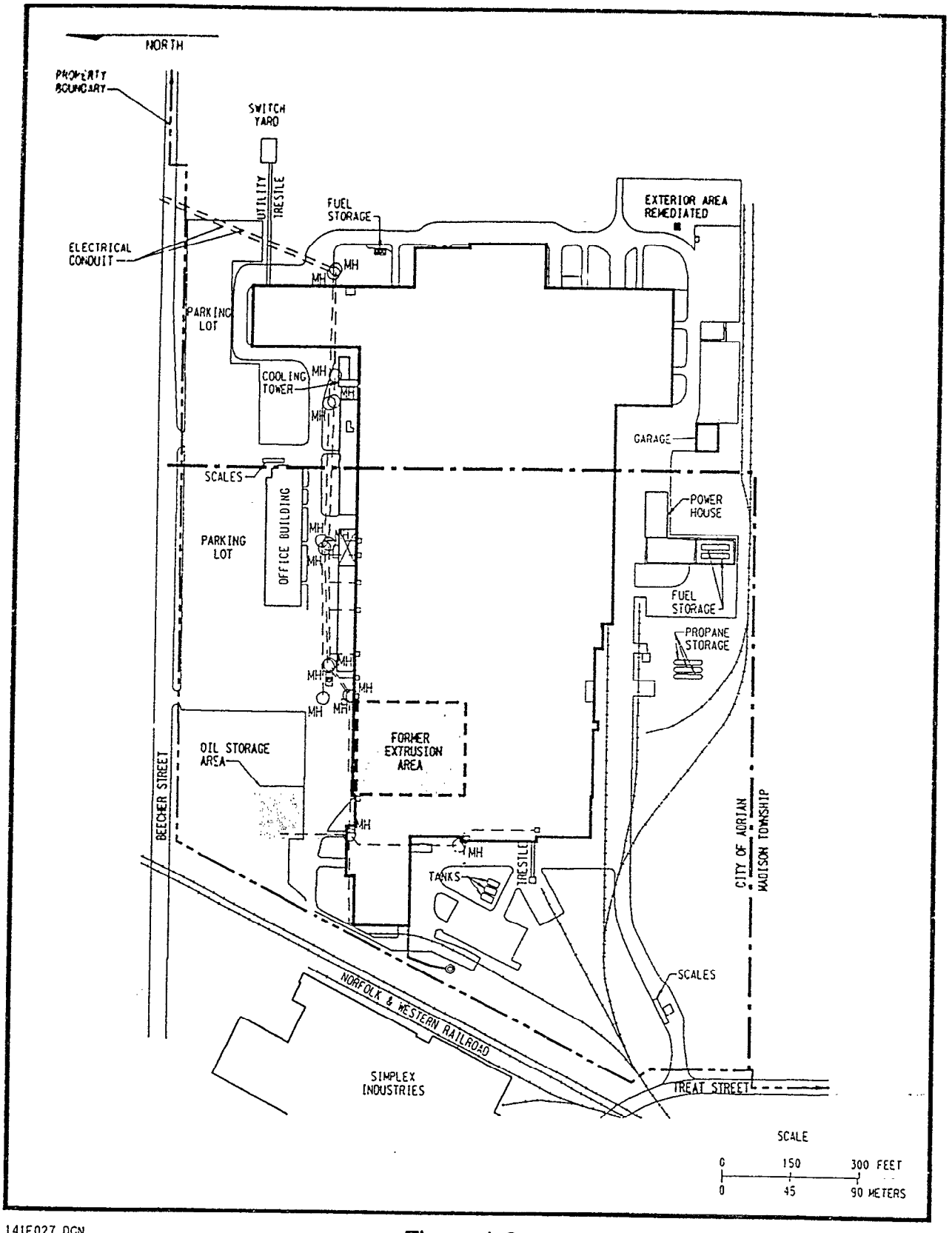

141F027.DGN

Figure 1-2
General Motors Plant
Adrian, Michigan
Site Plan

performed independent designation and verification surveys and will issue a report of its post-remedial verification survey results. Health physics and laboratory functions were provided by Thermo NUtech (TN), the radiological support subcontractor (RSS).

1.2 HISTORY

During the 1950s, the Bridgeport Brass Company operated a Special Metals Extrusion Plant in Adrian, Michigan, under contract AT-(30-1)-1405 with the AEC. The plant was operated to extrude uranium metal, which was used to make reactor fuel elements for the Hanford, Washington, and Savannah River, South Carolina, nuclear reactors.

At the completion of work by the Bridgeport Brass Company, the extrusion presses were removed and the extrusion pits filled with sand and covered with concrete (Figure 1-3). One large extrusion press was shipped to Reactive Metals, Inc., in Ashtabula, Ohio, and put into operation there, and all other equipment was dismantled and scrapped; the location of this material is unknown. The Adrian, Michigan, plant was sold to Martin Marietta Energy Systems, Inc. in the early 1960s and sold again in 1974 to GM, Inland Fisher Guide Division. No records exist from about 1961 until 1976 to document residual radioactivity levels on the floor, walls, fixtures, and structural members of the building.

In May 1976, a report from the General Accounting Office recommended that the Energy Research and Development Administration (ERDA), a predecessor of DOE, expedite completion of radiological surveys at numerous sites throughout the United States, including the former Bridgeport Brass Company property. In response, GM performed an in-house survey of the plant building to determine the need for decontamination activities. Residual uranium contamination exceeding the levels permitted by the Nuclear Regulatory Commission (NRC) and ERDA was found in many places at the site, especially on elevated horizontal surfaces, on fixtures, and in floor cracks. Equipment stored in these areas was removed, and contaminated areas were decontaminated by GM. Dust and scale buildup were found inside several exhaust ducts in the extrusion and cutting operations areas with uranium-238 at levels ranging from 11,000 to 25,000 pCi/g; these ducts were subsequently removed and sent for disposal. Results from a survey performed by GM indicated that the areas surveyed were within the NRC (and ERDA) guidelines. GM then asked ERDA to perform a survey to verify that the building met current NRC and ERDA guidelines for release of the property. In response, ERDA sent ORNL to inspect the facility, make investigative measurements, and conduct a survey if one was warranted.

ORNL conducted a follow-up survey in 1977. The surveys included measurements of residual uranium contamination on building surfaces; external gamma exposure rates; airborne radioactivity (collected by high-volume air samplers); uranium in water, sediments, and sludge in underground sumps and drains; and uranium-238, radium-226, and thorium-232 in soil samples from onsite locations. All areas of the floor and overhead structural members were found to be within NRC and ERDA guidelines

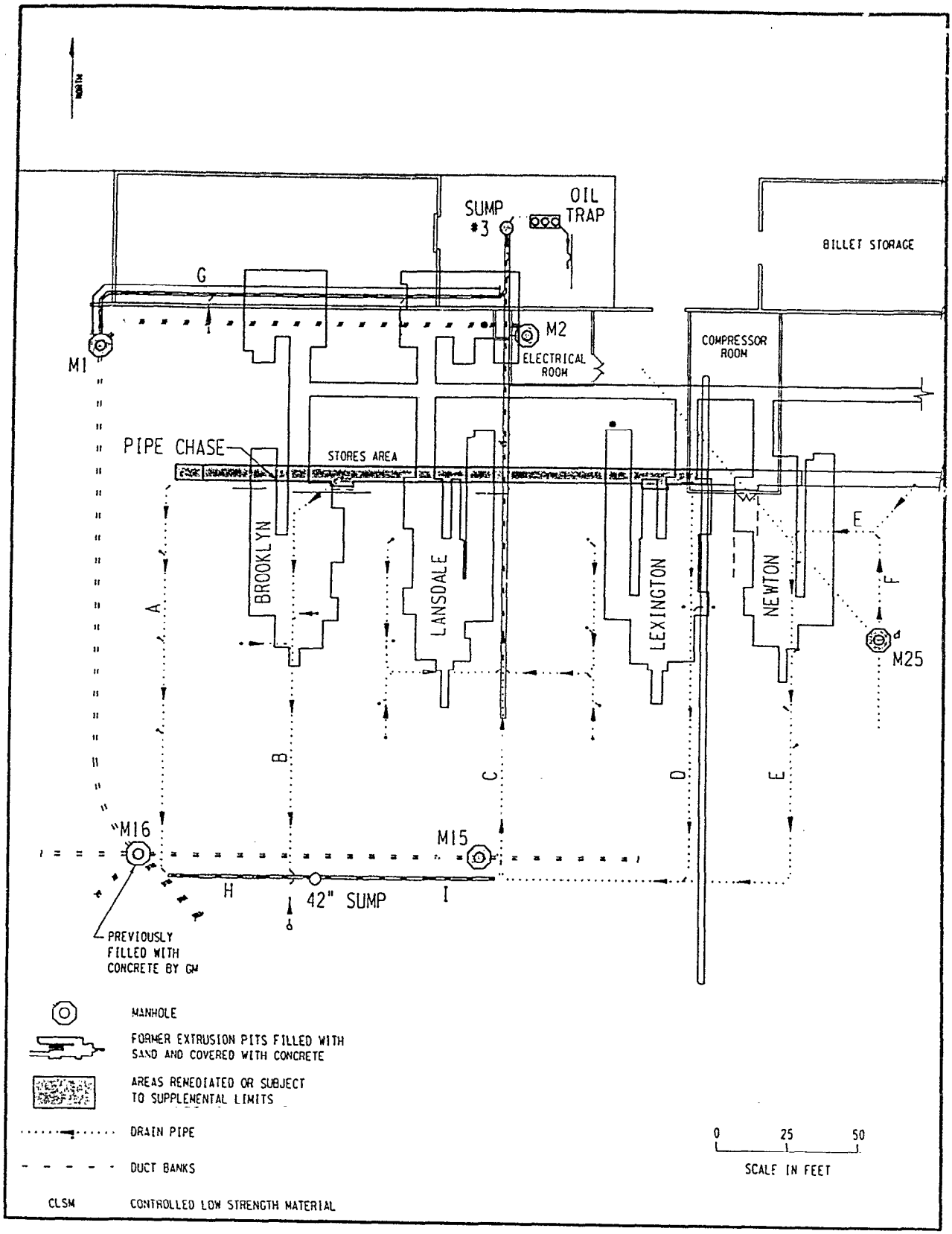

R78F014.DGN

Figure 1-3
Former Extrusion Pits with
Associated Drainage System

for radioactive contamination. However, some areas underneath the floor (service pits, manholes, holding tanks, drainlines, and sumps), were found to contain concentrations of uranium above guidelines (ORNL 1982). This survey also included taking smear samples from surfaces and samples of sediment from manholes and tanks. The maximum uranium-238 concentration, 21,000 pCi/g, was found in mud and sludge in the bottom of the 107-cm (42-in.) sump drain line that collects liquid from floor drains in the former uranium extrusion area (ORNL 1982). Concentrations of uranium ranged from 20 to 40 pCi/L in oil and from 110 to 350 pCi/g in sludge and scale collected near the top of the tank. An oily sample from the bottom of a drainline in the eastern section of the extrusion area contained uranium-238 concentrations of 4,100 pCi/L. Oily liquid from a sump in the area of the north loading dock (sump 3) contained 9,700 pCi/L of uranium-238. Samples from an underground storm drain contained uranium concentrations from 5 to 1,800 pCi/L in water and from 0.1 to 1,500 pCi/g in sludge and sediment. Therefore, remedial action was deemed necessary for the drainage and oil collection system at the site (Figure 1-4).

In 1985, GM installed the currently used manufacturing line in the former extrusion area. During construction, a tile drain line was excavated and found to be radioactively contaminated. The portion of the drain line directly under the manufacturing area was removed, placed in four 208-L (55-gal) drums, and shipped to Oak Ridge, Tennessee, for disposal.

A team of FUSRAP representatives from DOE, BNI, and SAIC visited the plant on June 23-24, 1994, to obtain information regarding the location, extent, and current condition of the manholes, sumps, and drainage system and conduct radiological surveys for validation of the ORNL data.

During the June site visit, minimal documentation was available on the extent of the interconnections of the manholes, sumps, and drain lines. Observation and surveying of the manholes and sumps were hindered because most of the manholes and sumps were filled with an oily liquid. The radiological survey results collected during the site visit showed that the manholes, sumps, pipe chase, and the associated piping were contaminated at levels generally consistent with data presented in the 1982 ORNL report.

1.3 SITE DESCRIPTION

The GM site is located in Lenawee County near Adrian, Michigan, on the eastern side of Route 52. The town of Adrian is approximately 48 km (30 mi) northwest of Toledo, Ohio, and 32 km (20 mi) southwest of Ann Arbor, Michigan (Figure 1-1).

The plant is a large complex covering approximately 7 ha (17 acres). Only part of the plant was used for the uranium extrusion operations (see Figure 1-2); this area is approximately 3,800 m^2 (41,000 ft^2) with a ceiling height that varies from 14 to 17 m (45 to 55 ft). Lighting is provided by several rows of fluorescent fixtures and by sunlight through windows in two 10-ft- high "monitors" (raised sections of the roof containing rows of windows). The large open areas of this structure are afforded by a massive steel framework. Supported from this framing are crane rails, roofing, electrical conduits, water pipes, space heaters, and exhaust ducts.

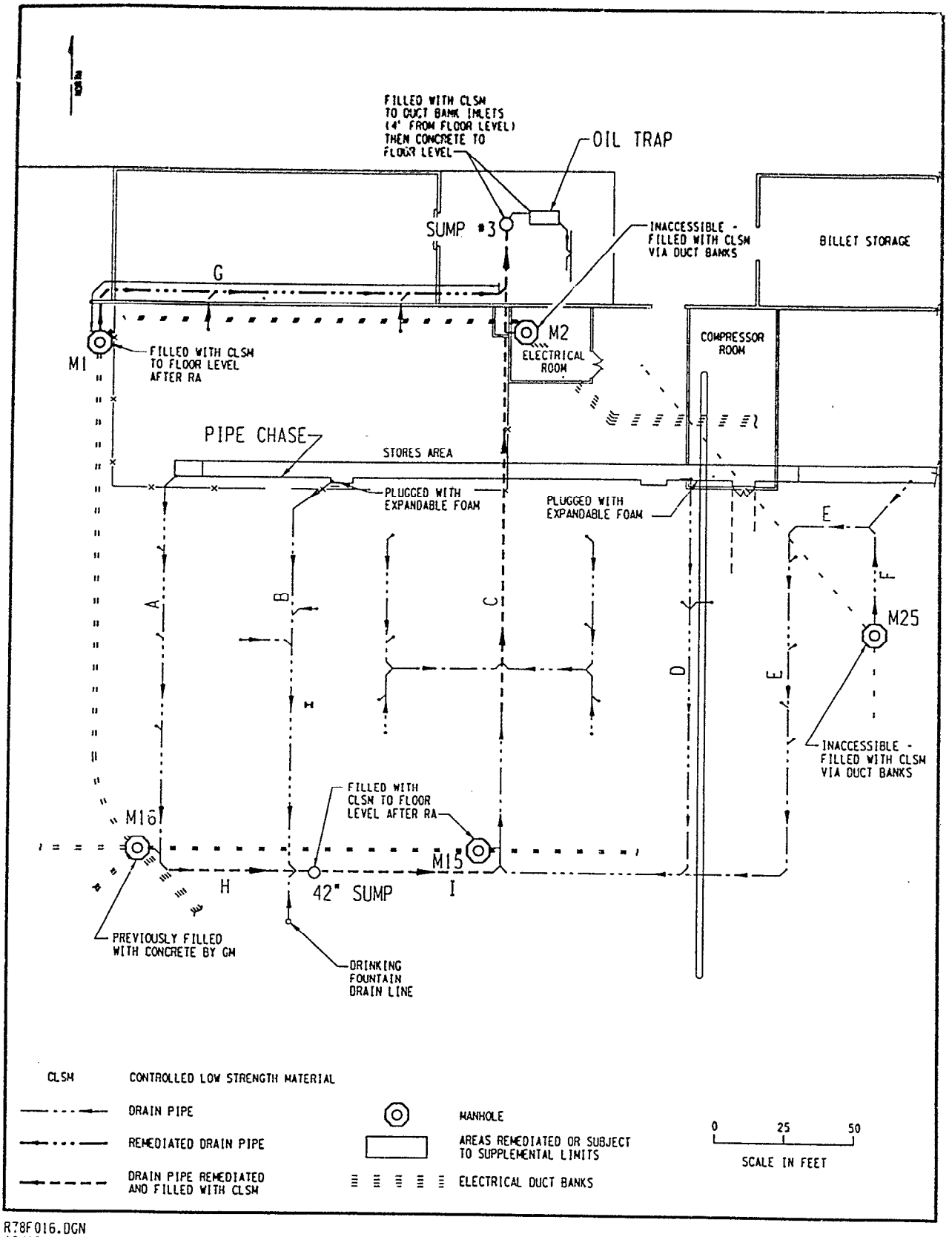

R78F016.DGN
12/18/96

Figure 1-4
Piping System Designated for Remedial Action
with Post-Remedial Action Status

The drainage system shown in Figure 1-4 was designated for remedial action because it contained concentrations of uranium-238 exceeding the DOE guidelines. The system contains sumps, electrical manholes, pipe chase, piping [ranging from 1 in. outer diameter (od) to 8 in. od], and electrical conduit within the electrical manholes (ranging from 1.5 in. od to 4 in. od).

2.0 REMEDIAL ACTION GUIDELINES

The source of contamination at the GM site was the machining of natural, depleted, and up to 2.1 percent enriched uranium metal. Available records do not fully describe the nature of the operations conducted at the site. Standards and criteria governing the release of properties for radiologically unrestricted future use are included in DOE Order 5400.5, "Radiation Protection of the Public and Environment" (and proposed by 10 CFR 834) and are comparable to those currently used by the Environmental Protection Agency (EPA) and the NRC. The remedial action guidelines (Table 2-1) for alpha activity from natural uranium, uranium-235, uranium-238, and associated decay products on indoor and outdoor structure surfaces are 5,000 disintegrations per minute per 100 square centimeters (dpm/100 cm^2) averaged over the whole surface area; 15,000 dpm/100 cm^2 (maximum); and 1,000 dpm/100 cm^2 (removable). The site-specific criterion for residual radioactive material in soil and sludge debris was 35 pCi/g for total uranium averaged over the remediated area.

Because only trace concentrations of radium and thorium exist in uranium metal after processing, extremely low concentrations of these two radionuclides were detected in characterization samples. Only the uranium isotopes contributed significantly to the radioactive contamination at the site.

Oil and asbestos were the only nonradioactive constituents mingled with residual uranium materials at concentrations requiring remedial action. All oil and asbestos materials containing residual radioactive material were removed from the site, properly managed, and transported to a licensed facility for disposal.

The target concentration at the site for the oil and water, or liquid waste, containing uranium was 300 pCi/L total uranium. This site-specific goal was established based on the DOE derived concentration guide (DCG) of 600 pCi/L total uranium for discharges of wastewater containing uranium from DOE facilities to surface waters and the NRC concentration limit of 300 pCi/L for natural uranium in liquid effluent discharges from licensed facilities to unrestricted areas (10 CFR 20). Although this site was not a licensed facility, the limit was used for determining the liquid criterion, with approval from the Michigan Department of Natural Resources, Division of Radiological Health (Michigan Department of Public Health 1995).

Table 2-1

Summary of DOE Guidelines for Residual Radioactive Contamination

Base Dose Limits

The basic limit for the annual radiation dose (excluding radon) received by a member of the general public is 100 mrem/yr. In implementing this limit, DOE applies as-low-as-reasonably-achievable principles to set site-specific guidelines where necessary.

Site-Specific Soil/Sludge Guidelines

The site-specific criterion for soil is 35 pCi/g for total uranium.

Site-Specific Liquid Guidelines

The site-specific criterion for oil/water solutions is 300 pCi/L for total uranium (DOE 1994).

Indoor/Outdoor Structure Surface Contamination

The residual contamination guidelines for fixed and transferable radioactive contamination (dpm/100 cm^2) (DOE Order 5400.5):

Radionuclide	Average	Maximum	Removable
Natural uranium, uranium-235, uranium-238, and associated decay products	5,000 (alpha)	15,000 (alpha)	1,000 (alpha)
Beta/gamma emitters (radionuclides with decay modes other than alpha emissions)	5,000 (beta/gamma)	15,000 (beta/gamma)	1,000 (beta/gamma)

3.0 REMEDIAL ACTION

3.1 CLEANUP/DECONTAMINATION ACTIVITIES

During the characterization sampling and surveys at the GM plant, concentrations of uranium exceeding the current guidelines were found in oil, scale, and sludge contained within the pipe chase and in the oil collection system (including sumps, manholes, and drains) near the area formerly used for uranium metal extrusion operations. All water, oil, sludge, and scale were removed from the sumps and manholes as well as the associated piping to the extent practicable using a 3,000-pounds-per-square-inch (psi) and 10,000-psi Hydrolaser™ systems, and wiping with rags. Some residual radioactive materials were left in place within the piping system because of the high costs of complete remediation and the economic impact of shutting down the GM plant to accomplish the remedial action. A hazard assessment was conducted and concluded that the supplemental limits for material left in the piping system would not result in a member of the general public receiving a dose above the DOE guidelines (DOE 1996). In addition, the subsurface piping and drain system was filled with a concrete material for added protection.

To collect data for the hazard assessment, an innovative technology incorporating an inverted-membrane-deployed detector called the Pipe Explorer™ was used. The technology was developed by the Science and Engineering Associates, Inc. (SEA) group, which provided technicians for operating the device. A significant savings for the remedial action was realized because of the nondestructive surveying methods of this system. No excavation of material was necessary to gain access to the drainage system, and the drainage system could be left in place while measurements were obtained. A detailed description of the technology and its usage at the site is provided in Appendix A.

The components remediated at the GM site were the pipe chase, electrical manholes (M1, M15), sump 3, a 107-cm (42-in.) sump, and all the accessible associated piping within each system. All sumps and manholes contained an oil/water and sludge liquid mix that first had to be removed before the decontamination process could be started.

All the oil/water and sludge were removed by pumping the liquids into lined drums, separated (oil and water), and transferred to storage tanks outside the building (Figure 1-2). As the liquids were removed and containerized, they were sampled to determine the appropriate treatment and disposal strategies and to obtain an indication of the uranium concentrations within the sumps and manholes. After the oil/water and sludge were removed, the scrap materials within the sumps and manholes were removed to facilitate decontamination efforts and removal of the scale on the walls and floors (Figure 3-1). This debris was wiped to remove the oil and scale and containerized separately for shipment as low-level radioactive waste (LLRW). Before shipment to the commercial disposal facility, the oil and sludge were removed from the storage tanks, placed in lined drums, and solidified to meet disposal facility requirements and land disposal restrictions.

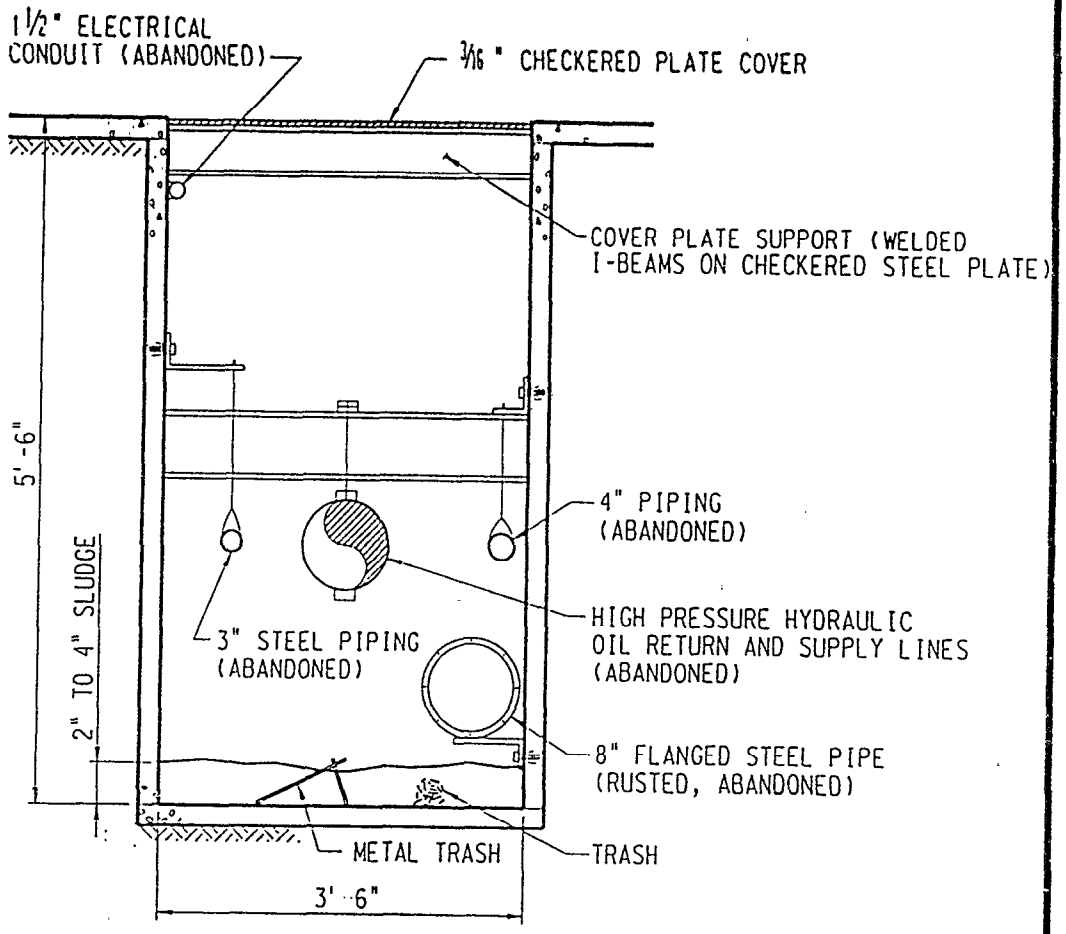

NOTES:

1. RUST ON ALL COMPONENTS.
2. SEE GENERAL LOCATION ON FIGURE 1-3.

141F021.DGN

Figure 3-1
Typical Section Through Pipe Chase
Before Remedial Action

The water was filtered and disposed of by a local water treatment and processing company, a support subcontractor specializing in management of waste waters of various types with agreement from the Michigan Department of Natural Resources, Division of Radiological Health (Michigan Department of Public Health 1995).

The contaminated inactive lines within the contaminated portion of the pipe chase were cut and wiped to remove the oily film. The decontamination materials were disposed of as LLRW. These pipes varied in size from 3 cm (1 in.) to 24 cm (8 in.) od. About 30 percent of the pipe hangers, brackets, and pipes were radiologically clean and were left in place. The walls and floors of the pipe chase were decontaminated using simple decontamination techniques, which successfully removed all uranium in the pipe chase that exceeded surface radioactivity guidelines.

The walls and floors of each sump were decontaminated by using a 3,000-psi and a 10,000-psi Hydrolaser™ system and wiping with rags. The piping was decontaminated to the extent possible, surveyed, and then plugged and filled with flowable concrete.

Manholes and sumps involved in the remedial action (Figure 1-4) were electrical manholes (Figure 3-2) M1, M15, sump 3 with the associated oil trap, and the 107-cm (42-in.) sump (Figure 3-3). The manholes were constructed of concrete with drain inlets and outlets and typical duct banks.

Some of the cables within the duct banks were insulated with friable asbestos-containing materials (ACM). Before the oil was removed, the ACM was encapsulated to keep it from spreading into the liquid and prevent unnecessary personnel exposure. After the oil was removed, the ACM was removed from the duct bank entrance, bagged, packaged in accordance with 49 CFR 173.1050 and Occupational Safety and Health Administration (OSHA) regulations in 29 CFR 1926.1101, and shipped for disposal as LLRW at the commercial disposal facility. The inactive cables were abandoned and left in place. To prevent inadvertent exposure to the ACM, all asbestos work was performed in accordance with applicable OSHA and Michigan State standards.

After all the oil/water, sludge, and ACM were removed, the decontamination efforts were completed and all manholes were filled with flowable concrete or controlled low-strength material (CLSM) up to the cover plate level. [CLSM is a material similar to concrete but less dense: CLSM is 110 lb/ft^3 (1.76 g/cm^3), while concrete is 150 lb/ft^3 (2.40 g/cm^3).] The cover plates were then embedded in the concrete or CLSM and welded shut.

For sump 3 (Figure 3-4) and the oil trap (Figure 3-5), shoring reinforced the brick wall in the top portion of the sump. The oil/water was pumped out; sump pumps, the ladder, and electrical items were removed from the sump, and access was gained to the oil trap. The oil trap was decontaminated and filled with CLSM. Sump 3 was filled with a combination of CLSM [bottom to top 1.2 m (4 ft)] and flowable concrete [top 1.2 m (4 ft)]. A detailed description of the post-remedial action status of each piping system is presented in Table 3-1.

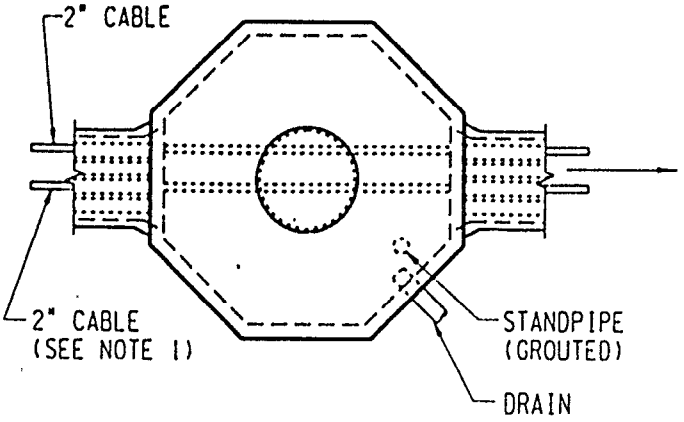

TOP VIEW - MANHOLE

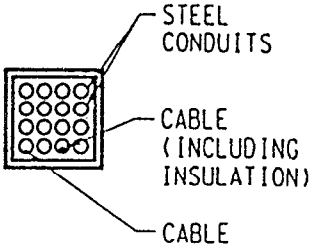

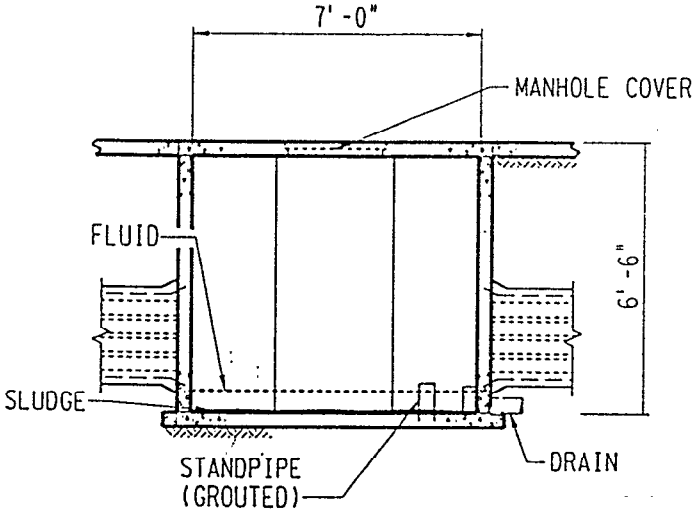

SIDE VIEW - MANHOLE

NOTES:

1. 2" CABLE IS INSULATED WITH ASBESTOS.
2. SEE GENERAL LOCATION ON FIGURE 1-3.

141F024.DGN

Figure 3-2
Typical Manhole
Before Remedial Action

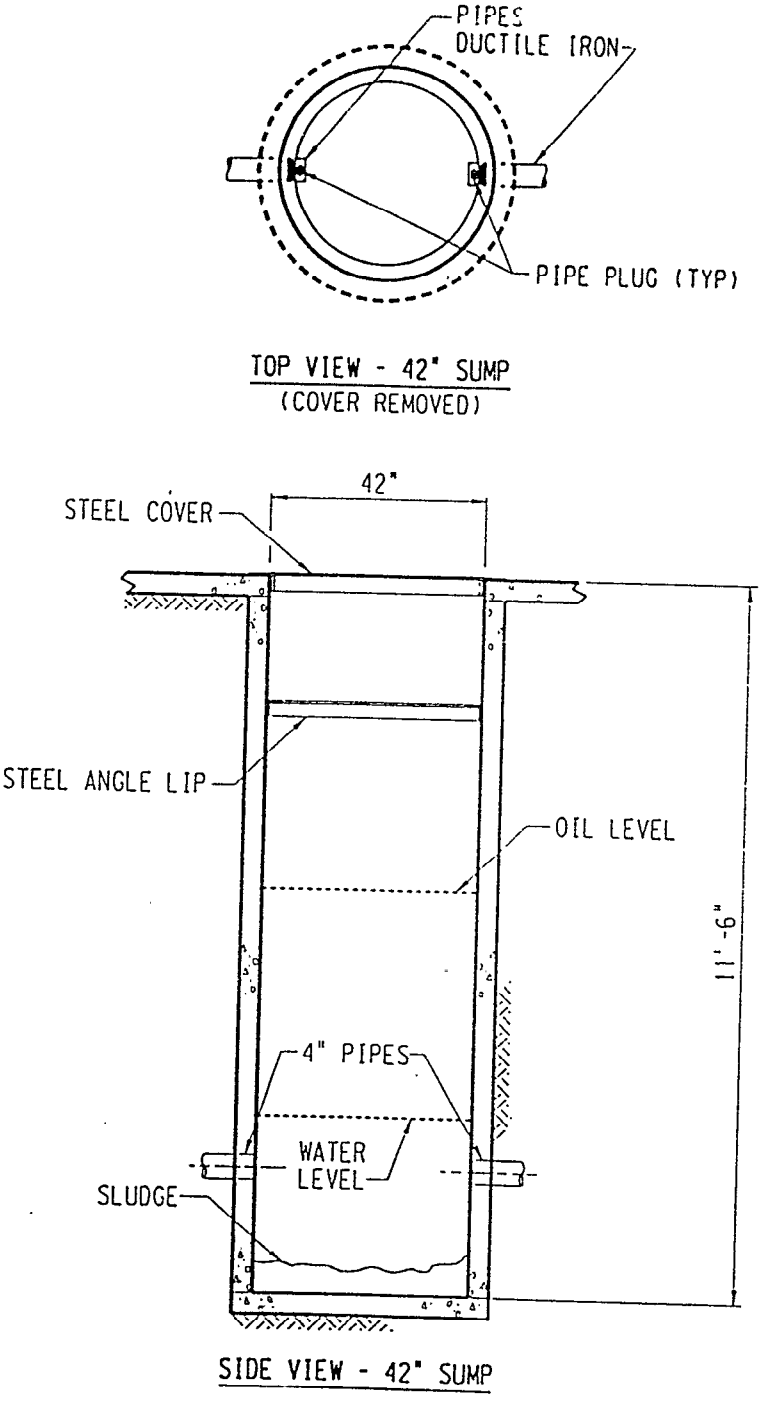

NOTE:

SEE GENERAL LOCATION ON FIGURE 1-3.

141F025.DGN

Figure 3-3
Forty-Two-Inch Sump
Before Remedial Action

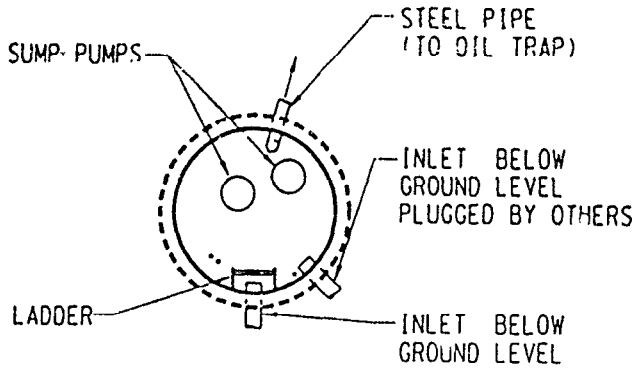

TOP VIEW - SUMP NO. 3
(COVER REMOVED)

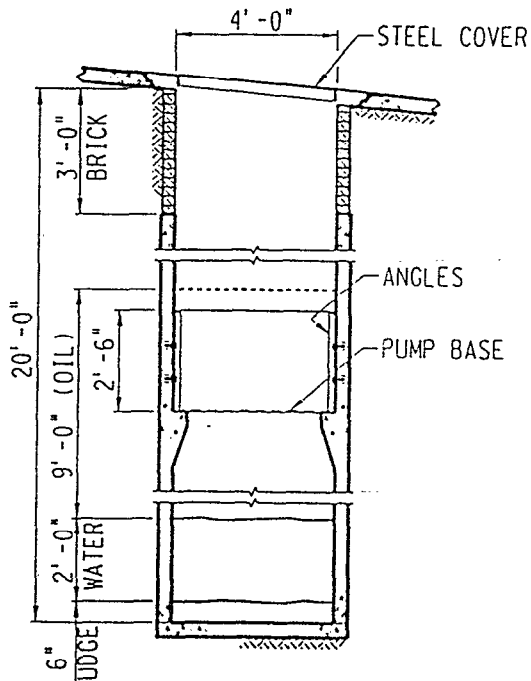

SIDE VIEW - SUMP NO. 3

NOTES:

1. RUST WAS PREVALENT ON ALL METAL COMPONENTS.
2. BRICK WAS DETERIORATED.
3. STEEL ACCESS LADDER WAS RUSTED.
4. SUMP PUMPS, LADDER, ELECTRICAL CONDUITS WERE NOT SHOWN IN THE SECTION FOR CLARITY.
5. SEE GENERAL LOCATION ON FIGURE 1-3.

141F023.DGN

Figure 3-4
Sump 3 Before Remedial Action

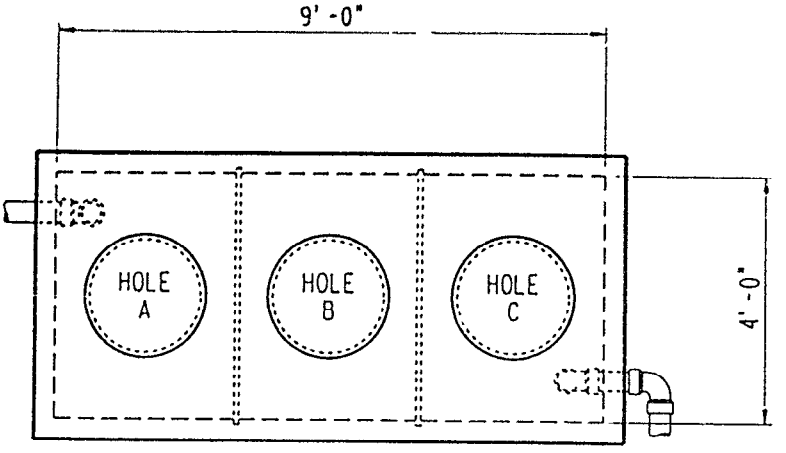

TOP VIEW - OIL TRAP

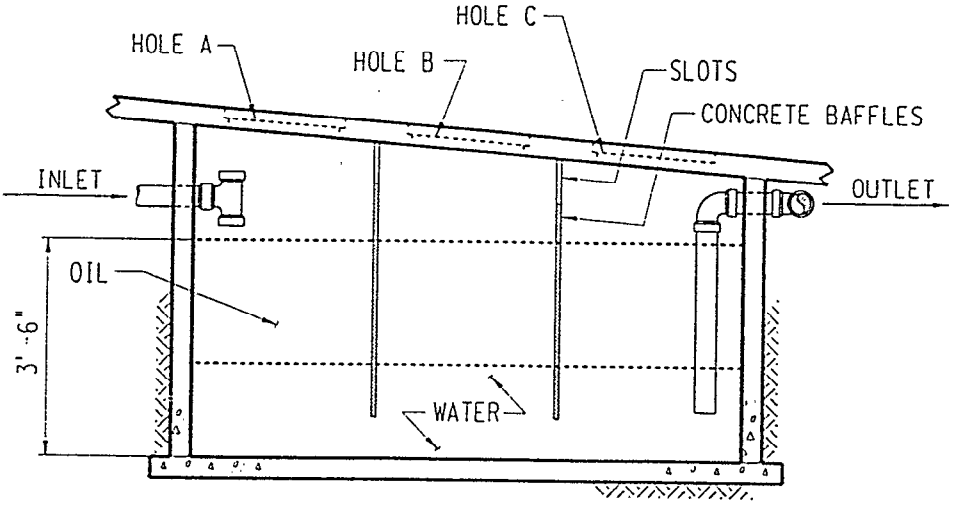

SIDE VIEW - OIL TRAP

NOTES:

1. SEE GENERAL LOCATION ON FIGURE 1-3.

R78F003.DGN

Figure 3-5
Oil Trap Before Remedial Action

Table 3-1

Post-Remedial Action Status of the Piping System

at the General Motors Site

Component	Length m (ft)	Status
Drainline:		
A	37 (120)	Filled
B	37 (120)	Plugged at pipe chase
C	61 (200)	Partially filled
E	52 (170)	Plugged at pipe chase
D	56 (185)	Plugged at pipe chase
F	9 (30)	Plugged at M25
G	44 (145)	Plugged at M1
H	14 (45)	Filled
I	18 (60)	Filled

Note: See Figure 1-2.

Component	Status
Sump 3/oil trap:	Backfilled with CLSM to duct bank inlets (4 ft from floor level), then concrete from floor level.
42-in. sump:	Backfilled with CLSM.
Pipe Chase:	Decontaminated to surface release criteria.
M1:	Backfilled to top with CLSM.
M2:	Backfilled to top with CLSM.
M15:	Backfilled to top with CLSM.
M25:	Backfilled to top with CLSM.

Note: Density of CLSM = 110 lb/ft^3 (1.76 g/cm^3)
Concrete = 150 lb/ft^3 (2.40 g/cm^3)

One isolated area of slightly contaminated soil suspected of being a former disposal area was located 40 m (131 ft) southeast of the main GM building (Figure 1-2). This soil was excavated to a depth of 0.6 m (2 ft) and an area of 0.03 m^2 (3 ft^2). Post-remedial action soil samples were then collected from the excavation to verify that the total uranium concentration was below the guidelines. Results from this sampling demonstrated that the post-remedial action total uranium concentration was 5 pCi/g, which is well below the site-specific cleanup limit of 35 pCi/g.

A hazard assessment was conducted on the remaining components of the discharge system (M2, M16, and M25) and piping systems. Because these areas were either filled by GM after its purchase of the building in 1974 (M16) or rendered inaccessible (M2 and M25) by placement of heavy machinery or switchgear, attempts to gain normal access would be extremely expensive. The unfilled manholes, M2 and M25, were filled with flowable concrete via their duct banks from other manholes.

A hazard assessment (DOE 1996) was conducted to evaluate the use of supplemental limits, with the existing concentrations as inputs to estimate potential exposures under current and future use. The hazard assessment was designed to evaluate doses to workers and the public from the residual contamination and to assess whether additional remediation was warranted based on costs of further reductions in dose and current and future land uses. The potential doses from the site in the areas with residual uranium were estimated as 0.8 mrem/yr for a non-routine maintenance worker and 2.5 mrem/yr for a future renovation worker. These estimates are well below the DOE limit of 100 mrem/yr.

The results from the hazard assessment showed that supplemental limits, as described in DOE Order 5400.5, were warranted for the GM site, so the existing residual uranium concentrations were approved as supplemental limits. These limits allow the materials to be left in place and permit the subject areas to be backfilled. The residual uranium in these limited areas will not pose a significant potential future risk, and the cost of removal would be very high relative to the long-term benefits that would result.

3.2 CONTAMINATION CONTROL DURING THE CLEANUP

During the remedial action, engineering controls, administrative controls, and monitoring were used to protect remediation workers and members of the general public from potential exposure to radiation in excess of applicable standards. These controls are outlined in the safety and health instructions for the site.

All personnel working in radioactively contaminated areas were required to wear disposable coveralls, booties, gloves, safety glasses, and hard hats. When conditions warranted, additional protective clothing and equipment such as hoods and respirators were required, as specified in the safety and health instructions.

Workers exiting radioactively contaminated work areas were subjected to a whole-body scan (frisked) at the control point by a health physics technician with a hand-held radiation detection instrument

to ensure that their protective clothing was not contaminated and to prevent the spread of contamination to clean areas. A frisk is simply a search for radioactive material that may have rubbed off onto the clothing of individuals inside the work area. The hand-held radiation detection instrument is held approximately two inches away from the area to be "frisked" and moved slowly [about 6 cm (2 in.) per second] to scan the portion of the body or clothing being examined. Personnel were resurveyed (boots and hands) after they removed their personal protective equipment (PPE) to ensure that no material was transferred to personal clothing or skin. Contaminated PPE was containerized and shipped for disposal as low-level radioactive waste.

The total exposure to the general public and the work force was minimized because of the nondestructive methods of surveying the piping systems and components. An SEA Pipe Explorer™ obtained radiological survey information on 12-cm (4-in.) drain lines and electrical duct bank conduits connecting the electrical manholes and sump 3 without using intrusive methods of conventional remedial actions (e.g., excavation, pipe cutting). The Pipe Explorer™ used a pneumatically deployed inverted membrane to send the detector through the system at a constant rate while obtaining real-time data. Therefore, the operator could remain outside the system and obtain the radiological results for the pipe. The only contaminated material from the operation was approximately 0.03 m^3 (0.04 yd^3) of plastic membrane (Appendix A).

Perimeter air particulate sampling was conducted adjacent to areas being remediated to ensure that no member of the general public was exposed to radioactivity in excess of the current DOE guidelines (DOE Order 5400.5). The DCG limits for air in DOE Order 5400.5 represent the concentration of a particular radionuclide that would yield a committed effective dose equivalent of 100 mrem/yr, the DOE basic dose limit, to an individual continuously exposed to the radionuclide by inhalation for an entire year. This guideline was established to protect the members of the general public against undue risk from radiation. High-volume air samplers were used to collect air samples for calculation of the air particulate concentration. The samples were collected and counted daily after sufficient time was allowed for radon progeny decay. Concentrations of uranium-238 measured by area particulate air samplers ranged from 4.3×10^{-13} μCi/ml (0.00043 pCi/L) to 7.8×10^{-13} μCi/ml (0.00078 pCi/L). The DCG is 2.0×10^{-12} μCi/ml (0.002 pCi/L) for uranium-238 (2.6 times larger than any activity detected at the site).

4.0 POST-REMEDIAL ACTION MEASUREMENTS

Post-remedial action surveys are designed to permit an evaluation of the current radiological status of the property and a comparison with guidelines for the release of property for radiologically unrestricted future use. Differences in measurement protocol among sites are generally attributable to the types of material handled and the physical form of the contaminants. The measurements listed in this section, therefore, are those needed to provide an adequate survey of the GM facility.

To determine the levels of uranium remaining after decontamination, the following surfaces were monitored: walls and floors of sump 3 (Figure 4-1), the oil trap associated with sump 3 (Figure 4-2), 42-in. sump, M1, M15 (Figure 4-3), piping associated with the systems remediated, the pipe chase, and the exterior area southeast of the building.

Direct surface contamination is the total amount of radioactive contamination on a surface; therefore, a survey of direct surface contamination quantifies both the removable and the permanently fixed contamination. Transferable contamination is the removable component and can conceivably be picked up on clothing or skin upon contact.

To quantify direct surface contamination, radiation detection instrumentation is placed directly on or near the surface to measure the radioactivity emitted from a known surface area. Direct alpha radiation is measured with an alpha scintillation detector connected to a scaler, an instrument that counts the number of radioactive disintegrations (decays) detected in a specified amount of time. Direct beta/gamma radiation measurements are obtained with a Geiger-Mueller probe attached to a scaler. The probe is placed about 1.3 cm (0.5 in.) above the surface to be surveyed, and decay pulses are allowed to accumulate for one minute on the scaler, resulting in a measurement of counts per minute (cpm) for the surface area. These measurements are then converted, with appropriate calibration and conversion factors, to dpm/100 cm^2, a common unit of measurement in health physics.

To measure transferable contamination, the surface is "swiped" or "smeared" with a paper smear. The smear is placed in a portable smear counter, and alpha and beta/gamma radiation are each counted for one minute. The resulting measurements in cpm are then readily converted to dpm/100 cm^2.

TN performed the laboratory functions for analyzing the collected samples and provided radiological support as required. ORNL performed independent verification surveys of the remediated areas using similar survey techniques; the ORNL survey data will be issued as a separate report. When remedial action was completed, the property was restored to a condition agreed upon by DOE and the property owner: the sumps and manholes were backfilled and cover plates welded shut, and all associated piping was plugged or filled.

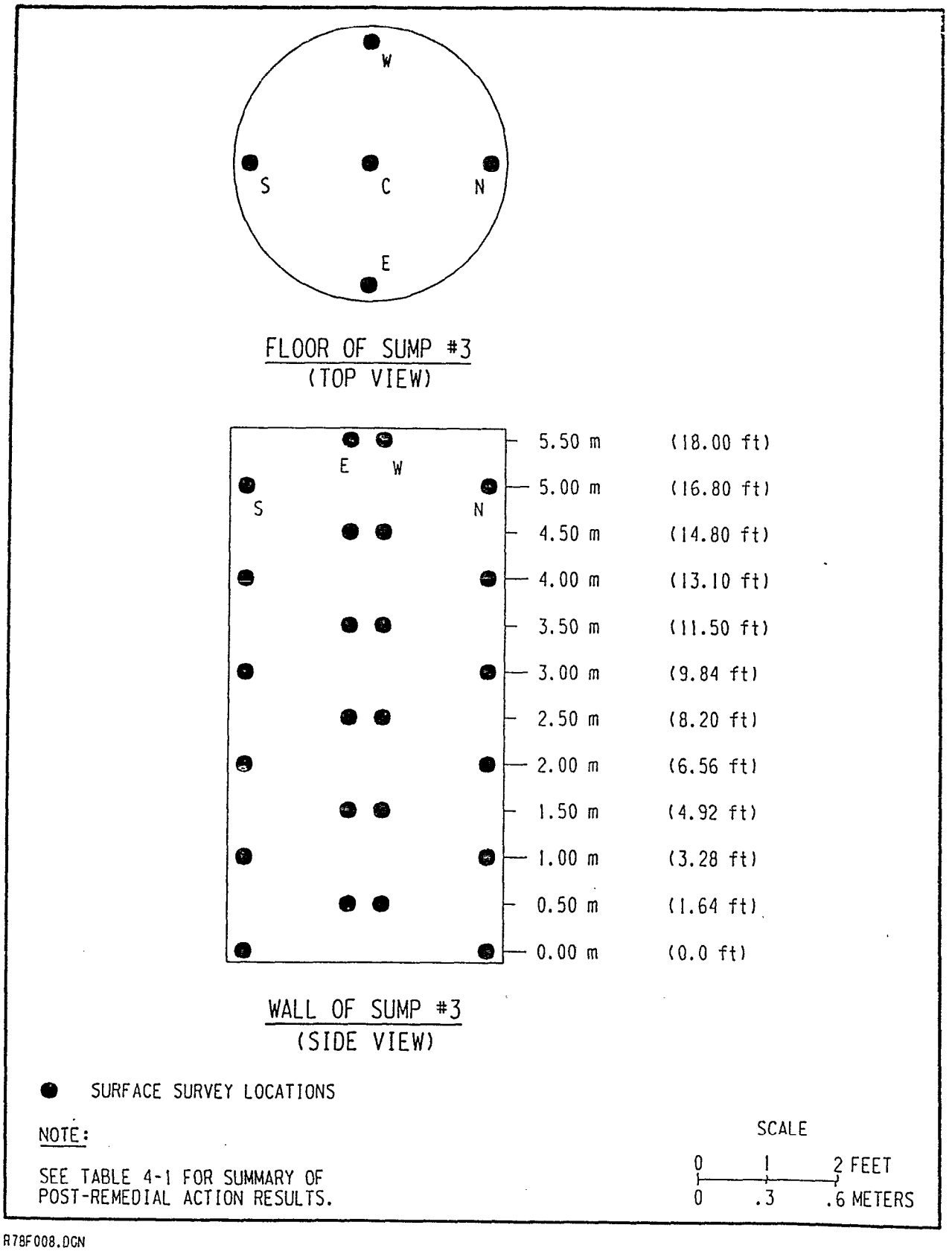

R78F008.DGN

Figure 4-1
Post-Remedial Action Survey Locations for Sump 3

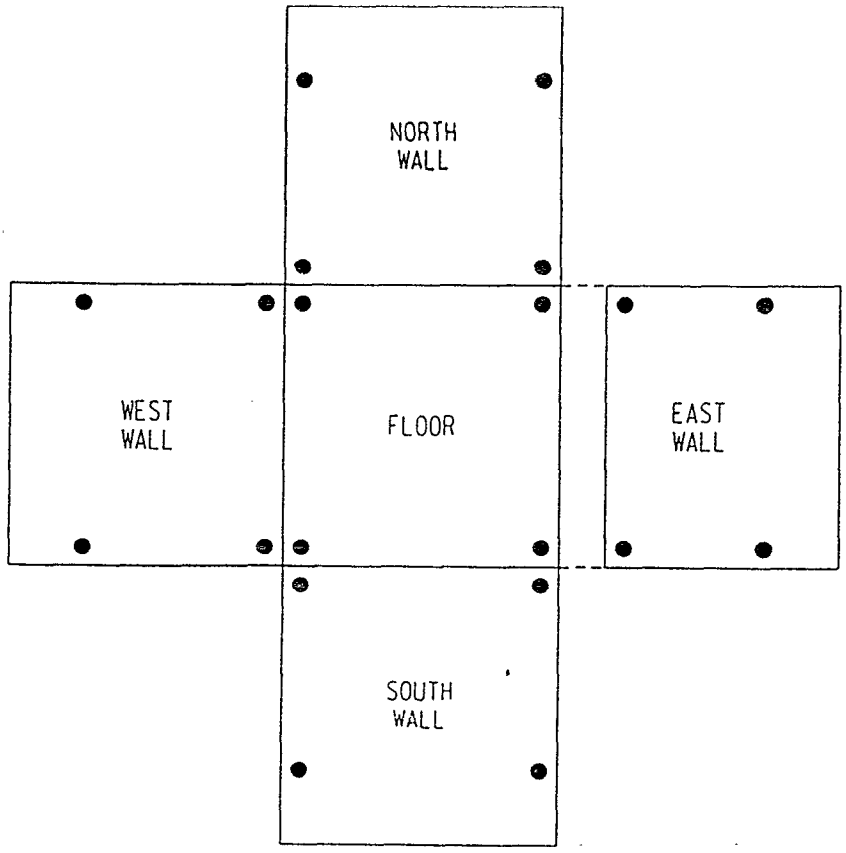

EXPLODED VIEW

● SURFACE SURVEY LOCATIONS

NOTE:

SEE TABLE 4-2 FOR SUMMARY OF
POST-REMEDIAL ACTION SURVEY RESULTS.

SCALE: 3/8" = 1'

R78F010.DGN

Figure 4-2
Typical Remedial Action Survey Locations
for the Sump 3 Oil Trap

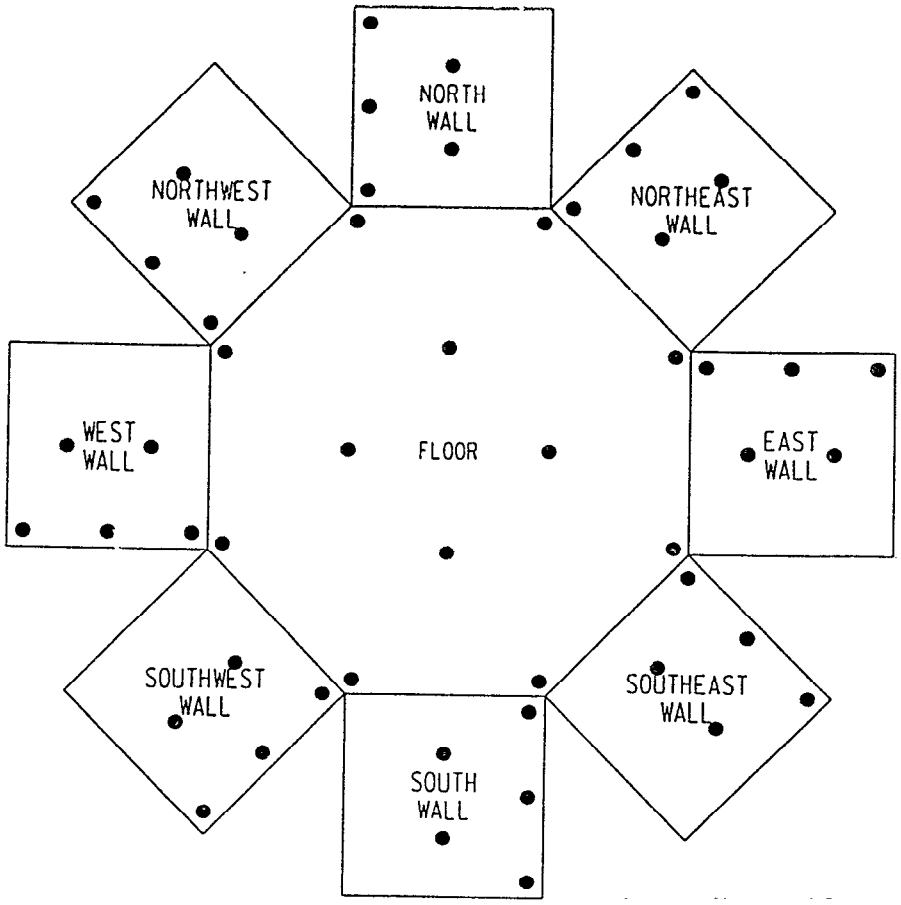

EXPLODED VIEW

● SURFACE SURVEY LOCATIONS

NOTE:

SEE TABLE 4-1 FOR SUMMARY OF
POST-REMEDIAL ACTION SURVEY RESULTS

SCALE: 3/8" = 1'

R78F011.DGN
10/3/96

Figure 4-3
Typical Post-Remedial Action Survey Locations
for the Remediated Manholes

All removable residual radioactive material above the current guideline that could be reached in a practicable and cost-effective manner was removed from the GM site and properly disposed of (see Appendix B). Post-remedial action direct surface contamination measurements (Tables 4-1 and 4-2) were used to verify the removal of the residual radioactive material from the pipe chase areas to levels below the DOE guidelines. The supplemental limits derived from the previously described hazard assessment were applied to the remaining areas.

Table 4-1

Post-Remedial Action Survey Results for the Drain Lines at the GM Site

Component	Current Levels of Residual Contamination (dpm/100 cm^2)	Average Over Length Surveyed (dpm/100 cm^2)	Status
Drain Line:			
A:	Pipe was found to be previously backfilled.	N/A	Filled
B:	3,500 - 32,720	7,760	Plugged at pipe chase
C:	7,840 - 1,343,631	540,000	Partially filled
D:	3,270 - 10,941	1,850	Plugged at pipe chase
E:	2,940 - 5,484	2,210	Plugged at pipe chase
F:	Pipe inaccessible. No survey.	N/A	Plugged at M25
G:	3,280 - 3,307	1,110	Plugged at M1
H[a]:	36,637 - 1,314,289	361,000	Filled
I[a]:	18,668 - 752,077	166,000	Filled

[a]These drain lines are associated with the 42-in. sump.

Table 4-2

Post-Remedial Action Survey Results for Other Components at the GM Site

Component	Direct Surface Contamination: Number of Samples	Direct Surface Contamination: Alpha Range (dpm/100 cm²)	Direct Surface Contamination: Beta/Gamma Range (dpm/100 cm²)	Transferable Surface Contamination[a]: Number of Samples	Transferable Surface Contamination[a]: Beta/Gamma Range (dpm/100 cm²)
M1					
Walls:					
North:	5	61 - 212	-83 - 584	a	a
Northeast:	5	20 - 161	445 - 1,168	1	< -21[b]
East:	6	50 - 182	56 - 640	1	< -16
Southeast:	5	81 - 192	195 - 862	a	a
South:	5	71 - 222	250 - 862	a	a
Southwest:	5	50 - 212	28 - 695	a	a
West:	5	30 - 313	-83 - 528	1	< -51
Northwest:	6	50 - 192	306 - 862	a	a
Floor		<-6 - 89	612 - 4,727	2	<-7 - <28
M15					
Walls:					
North:	5	-50 - 121	584 - 2,475	1	< 16
Northeast:	5	-50 - 71	556 - 1,502	1	< -1
East:	6	-50 - 141	445 - 2,197	2	< -1 - 54
Southeast:	5	-20 - 111	334 - 1,418	2	< 4 - 54
South:	5	-50 - 121	501 - 3,587	2	< -9 - 29
Southwest:	5	-50 - 161	417 - 1,307	1	< -17
West:	5	-50 - 252	417 - 945	2	< -38 - 20
Northwest:	6	-50 - 202	195 - 4,255	1	83
Floor:	12	81 - 353	1,390 - 13,598	12	< 14 - 185
42-in. SUMP					
Walls:	14	69 - 956	<163 - 4,391	14	< -19 - 58

Table 4-2
(continued)

Component	Direct Surface Contamination: Number of Samples	Direct Surface Contamination: Alpha Range (dpm/100 cm²)	Direct Surface Contamination: Beta/Gamma Range (dpm/100 cm²)	Transferable Surface Contamination[a]: Number of Samples	Transferable Surface Contamination[a]: Beta/Gamma Range (dpm/100 cm²)
SUMP 3					
Walls:					
North:	6	<-4 - 140	729 - 2,609	4	< 7 - 41
East:	6	53 - 282	1,150 - 5,863	4	< 3 - <20
South:	6	63 - 140	6,170 - 9,285	4	<-19 - 105
West:	6	<15 - 82	701 - 1,066	4	<-27 - 24
Floor:	5	<-8 - 258	125 - 215,064	NA	
OIL TRAP:					
Hole A:					
Walls:					
North:	4	c	844 - 63,375	c	c
East:	4	c	1,216 - 3,896	c	c
South:	4	c	1,588 - 108,933	c	c
West:	5	c	1,067 - 4,069	c	c
Floor:	4	c	5,246 - 15,344	c	c
Hole B:					
Walls:					
North:	4	c	1,017 - 52,308	c	c
East:	4	c	1,117 - 26,774	c	c
South:	4	c	1,166 - 6,352	c	c
West:	5	c	1,638 - 3,524	c	c
Floor:	4	c	4,067 - 64,909	c	c
Hole C:					
Walls:					
North:	4	c	1,861 - 8,511	c	c
East:	4	c	794 - 7,370	c	c
South:	4	c	2,060 - 6,179	c	c
West:	5	c	1,638 - 7,618	c	c
Floor:	4	c	1,516 - 32,903	c	c

Table 4-2
(continued)

Component	Direct Surface Contamination: Number of Samples	Direct Surface Contamination: Alpha Range (dpm/100 cm²)	Direct Surface Contamination: Beta/Gamma Range (dpm/100 cm²)	Transferable Surface Contamination[a]: Number of Samples	Transferable Surface Contamination[a]: Beta/Gamma Range (dpm/100 cm²)
PIPE CHASE:					
East End:					
Walls:					
North:	52	<-8 - 70	<-309 - 1,206	2	< -12 - <5
South:	52	<-8 - 97	<-281 - 757	a	a
East:	39	< 2 - 97	< 84 - 4,628	11	<-25 - 52
Floor:	39	<-15 - 51	<-564 - 908	a	a
West End:					
Walls:					
North:	44	<-13 - 290	< 167 - 2,753	14	<-17 - 75
South:	44	< 15 - 602	< 83 - 3,115	14	<-34 - 114
West:	6	<-13 - 25	< 222 - 612	a	a
Floor:	33	< 6 - 233	< 306 - 3,671	21	<-17 - 92[b]
Stores Area:					
Walls:					
North:	70	<- 331	<-532 - 2,380	24	<-29 - 91
South:	70	< 2 - 324	<-112 - 8,426	17	<-28 - 79
Floor:	56	< -8 - 335	<-112 - 2,160	22	<-19 - 67
Average DOE Guideline:		5,000	5,000 (Average) 15,000 (Maximum)		1,000

[a]Transferable samples taken when direct surface contamination readings exceed the DOE guidelines.
[b]The "<" sign indicates that the measurement was less than the minimum detectable activity (MDA). The "<-" sign indicates that the measurement was less than the MDA and that after background was subtracted, the numerical value was negative (i.e., <MDA result minus background >MDA = negative results indicated by "<-")
[c]Pipe Explorer™ readings, capabilities limited to direct readings only. Alpha detection currently unavailable.

Note: Pipe chase area was remediated to DOE Order 5400.5 levels. Remaining areas were remediated to supplemental levels.

5.0 POST-REMEDIAL ACTION STATUS

The post-remedial action survey data indicated that all areas of the GM site determined to be contaminated during characterization surveys are now in compliance with applicable guidelines (authorized or supplemental limits) for cleanup of residual radioactive contamination. Based on a review of post-remedial action measurements, survey procedures, and quality assurance data, the IVC confirmed that the site was decontaminated to the radiological guidelines established for the site, below the DOE guidelines.

After completing verification activities, the IVC notified DOE-Headquarters, Division of Facility and Site Decommissioning, and DOE-Oak Ridge Operations, Former Sites Restoration Division, of its findings and recommendations. DOE reviewed the data to determine whether the remedial action was successful. Based on this review, radiological conditions at the site were determined to be in compliance with DOE decontamination criteria and standards to protect health, safety, and the environment, and the site was released for use without radiological restrictions.

REFERENCES

Bechtel National, Inc. (BNI), 1995. Memorandum from D. Sexton to G. Palau, *Scoping Notice: Former Bridgeport Brass Company Special Metals Extrusion Plant Site, Adrian, Michigan,* BNI CCN 127976, March, 29, 1995.

Department of Energy (DOE), 1994. Letter from J. Kopotic to R.A. Gaede, "General Motors Plant - Cleanup Strategy," BNI CCN 123548, November 29, 1994.

DOE, 1995. Letter from J. Kopotic to K. Stange, "Post-RA Survey Results of Exterior Soil Behind Plant," BNI CCN 133557, August 23, 1995.

DOE, 1996. *Hazard Assessment for the General Motors Site, Adrian, Michigan*, DOE/OR/21950-1017, Oak Ridge, Tenn. (June).

Michigan Department of Public Health, 1995. Letter from D. Minaar to J. Koptic, "Comments on the Proposal for Management of Waste Oil Preparatory to Remediation of Uranium Contamination," BNI CCN 126746 (February 17).

Oak Ridge National Laboratory (ORNL), 1982. *Radiological Survey of the Former Bridgeport Brass Company Special Metals Extrusion Plant Site, Adrian, Michigan*, DOE/EV-0005/28, ORNL-5713 (April).

GLOSSARY

Alpha-emitting - See **Radiation.**

Ambient background radiation - Ambient background radiation refers to naturally occurring radiation emitted from either cosmic (e.g., from the sun) or terrestrial (i.e., from the earth) sources. Exposure to this type of radiation is unavoidable, and its level varies greatly depending on geographic location. For example, New Jersey typically receives 100 millirem per year (mrem/yr), Colorado receives about 115 mrem/yr, and some areas in South America receive up to 7,000 mrem/yr. Naturally occurring terrestrial radionuclides include uranium, radium, potassium, and thorium (see **Radionuclide**). The dose levels do not include the concentrations of naturally occurring radon inside buildings.

Beta/gamma-emitting - See **Radiation.**

Centimeter - A centimeter (cm) is a metric unit of measure for length; 1 inch is equal to 2.54 cm; 1 foot is equal to approximately 30 cm.

Contamination - The term "contamination" is used generally to mean a concentration of one or more radioactive materials that exceeds naturally occurring levels. Contamination may or may not exceed the DOE cleanup guidelines.

Disintegrations per minute - Disintegrations per minute (dpm) is the measurement indicating the amount of radiation being released from a substance per minute.

Dose - As used in this report, dose is actually dose equivalent and is used to relate absorbed dose (mrad) to an effect on the body. Dose is measured in mrem. For comparison, a dose of 500,000 mrem to the whole body within a short time causes death in 50 percent of the people who receive it; a dose of 5,000,000 mrem may be delivered to a cancerous tumor during radiation treatment; normal background radiation at or near sea level results in an annual dose of about 100 mrem; DOE radiation protection standards limit the dose that may be received by members of the general public to 100 mrem/yr above background levels; living in a brick house typically results in a dose of about 75 mrem/yr above the background level.

Exposure rate - Exposure rate is the rate at which radiation imparts energy to the air. Exposure is typically measured in microroentgens (μR), and exposure rate is typically expressed as μR/h. The dose to the whole body can be approximated by multiplying the exposure rate by the number of hours of exposure. For example, if an individual were exposed to gamma radiation at a rate of 20 μR/h for 168 h/week (continuous exposure) for 52 weeks/yr, the whole-body dose would be approximately 175 mrem/yr.

Gamma radiation - See **Radiation.**

Meter - A meter (m) is a metric unit of length; 1 m is equal to approximately 39 inches.

Microroentgen - A microroentgen (μR) is a unit used to measure radiation exposure. For further information, **see Exposure rate.**

Millirem - The millirem (mrem) is the unit used to measure radiation dose to man. The DOE dose limit is 100 mrem above background radiation levels within any one-year period for members of the general public. Naturally occurring radioactive substances in the ground result in a yearly exposure of about 100 mrem to each member of the population. To date, no difference can be detected between the health of population groups exposed to 100 mrem/yr above background and the health of groups who are not exposed.

Natural background radiation - Natural background radiation refers to radiation emitted from the naturally occurring radionuclides found in manmade materials. The concentrations of the radionuclide, and thus the radiation, will vary widely because of variations in the composition of the materials.

Radiation - There are three primary types of radiation: alpha, beta, and gamma. Alpha radiation travels less than an inch in air before it stops, and it cannot penetrate the outer layers of human skin. Beta radiation can penetrate the outer layers of skin but cannot reach the internal organs. Gamma radiation, the most penetrating type, can usually reach the internal organs.

Radionuclide - Radioactive elements are also referred to as radionuclides. For example, uranium-235 is a radionuclide, uranium-238 is another, thorium-232 is another, and so on.

Remedial action - Remedial action is a general term used to mean "cleanup of contamination that exceeds DOE guidelines." It refers to any action required so that a property may be certified as being in compliance with guidelines and may therefore be released for future use. Remedial action also includes restoring remediated properties to their original conditions as far as possible.

Uranium - Uranium is a naturally occurring radioactive element. The principal use of refined uranium is for the production of fuel for nuclear reactors. Uranium in its natural form is not suitable for use as a fuel source.

APPENDIX A

CHARACTERIZATION OF RADIOACTIVE CONTAMINATION INSIDE PIPES WITH THE PIPE EXPLORER™ SYSTEM

Characterization Of Radioactive Contamination Inside Pipes With The Pipe Explorer™ System*

C. David Cremer (seaentec@usa.net, 505-884-2300)
William Lowry (sea@roadrunner.com, 505-983-6698)
Eric Cramer (seaentec@usa.net, 505-884-2300)
D.T. Kendrick (seaentec@usa.net, 505-884-2300)

Science and Engineering Associates, Inc.
6100 Uptown Blvd., NE
Albuquerque, NM 87110

Introduction

The U.S. Department of Energy's nuclear facility decommissioning program needs to characterize radiological contamination inside piping systems before the pipe can be recycled, remediated, or disposed. Historically, this has been attempted using hand held survey instrumentation, surveying only the accessible exterior portions of pipe systems. Difficulty, or inability of measuring threshold surface contamination values, worker exposure, and physical access constraints have limited the effectiveness of this approach. Science and Engineering associates, Inc. under contract with the DOE Morgantown Energy Technology Center has developed and demonstrated the Pipe Explorer™ system, which uses an inverting membrane to transport various characterization sensors into pipes. The basic process involves inverting (turning inside out) a tubular impermeable membrane under air pressure. A characterization sensor is towed down the interior of the pipe by the membrane.

Advantages of this approach include the capability of deploying through constrictions in the pipe, around 90° bends, vertically up and down, and in slippery conditions. Because the detector is transported inside the membrane (which is inexpensive and disposable), it is protected from contamination, which eliminates cross-contamination. Characterization sensors that have been demonstrated with the system thus far include: gamma detectors, beta detectors, video cameras, and pipe locators. Alpha measurement capability is currently under development.

A remotely operable Pipe Explorer™ system has been developed and demonstrated for use in DOE facilities in the decommissioning stage. The system is capable of deployment in pipes as small as 2-inch-diameter and up to 250 feet long. This paper describes the technology and presents measurement results of a field demonstration conducted with the Pipe Explorer™ system at a DOE site. These measurements identify surface activity levels of U-238 contamination as a function of location in drain lines. Cost savings to the DOE of approximately $1.5 million dollars were realized from this one demonstration.

Research sponsored by the U.S. Department of Energy's Morgantown Energy Technology Center, under contract DE-AC21-93MC30172 with Science and Engineering Associates, Inc. 6100 Uptown Blvd. NE, Albuquerque, NM, 87110; telefax: (505) 881-7420

* Patent Pending

Problem

By their nature, the interiors of pipes and ducts are difficult to access. In many cases, even the exteriors are inaccessible. For example, drainlines are buried or encased in concrete and duct work is often elevated or enclosed. To access these structures for characterizations such as radiological surveys, requires significant effort and cost. These costs are further increased if the characterizations are carried out in a radiological control zone, where greater personal protective measures and support crews are required.

Furthermore, for alpha and beta emitting contaminants, such as U-238 and Pu-239, it is necessary to take unobstructed measurements of contaminated surfaces. Thus, external measurements through pipe walls are inadequate and the only way to gather data is to get an instrument inside of the pipe.

Alternative methods to the Pipe Explorer™ system can be used to transport detectors into pipes, such as pipe crawlers and push rods. However, these methods lead to ambiguous results if there is removable contamination present. With nothing to prevent contamination from getting on the detector there is no way to differentiate between contamination on the pipe wall and contamination on the detector.. There are additional limitations associated with these alternative methods. For example, pipe crawlers are typically limited to larger diameter pipes (> 4 inches). They are also cumbersome to operate around elbows and have a difficult time in pipes with slippery surfaces. Push rod methods are limited in length and are often unreliable when trying to get a detector around elbows.

Solution

As a solution to this problem, SEA adapted its inverting membrane technology to transport radiation detectors and other characterization tools into pipes. The system uses an air-tight membrane configured so that when it is pressurized it inverts into a pipe. As it inverts the pressure force on the end of the membrane is adequate to tow a detector around multiple elbows and through several hundred feet of piping. This technology not only provides an effective transportation method for detectors, but it also provides a clean conduit through which the detector can travel.

Technology Description

The primary components of the Pipe Explorer™ technology are illustrated in Figure 1. The heart of the system is an air-tight membrane which is initially spooled inside of a canister. The end of the membrane protruding out of the canister is folded over and attached to a basepipe. When the canister becomes pressurized in this configuration, the air pressure on the membrane causes the membrane to be pulled from the spool. This continues until the membrane is completely off the spool. A characterization tool such as a radiation detector is attached to the end of the membrane and towed into the pipe as the membrane continues to invert. The detector cabling is also towed into the pipe from the spool. To retrieve the system from a pipe, the process is simply reversed, where the cabling, detector, and membrane are wound back onto the spool. The system can thus be used to move a detector freely back and forth through a pipe while the detector output and position are continuously recorded. As a result, the Pipe Explorer™ system provides high resolution analysis of the location of radioactive contamination in pipes.

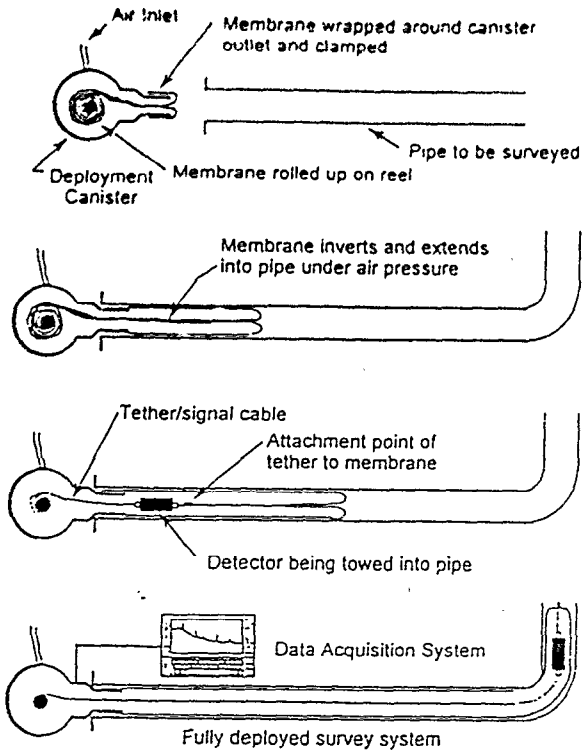

Figure 1. Sequence of membrane and detector deployment with the Pipe Explorer™ system.

The membrane also provides a clean conduit through which the detector travels. This protects both the detector and the workers handling it. Furthermore, measurements are inherently more reliable. A detector transported in any other fashion runs the risk of removable contamination adhering to the sensor, which can cause erroneously high or false positive readings.

The general operating procedure is to first deploy the membrane halfway into the pipe. This is the point where the detector begins to enter the pipe from the deployment canister. At this time data acquisition is initiated. In most cases the detector is deployed out relatively quickly (up to 30-ft/min). More detailed radiological measurements are taken as the detector is retrieved from the pipe at a slower rate.

As the detector is being retrieved the tether is wound back into the deployment canister. The membrane prevents contamination from contacting the tether. However, as a precautionary measure, two sampling smears are used to swipe the entire surface of the tether and the detector. When the tether is completely retrieved the smears are surveyed with a pancake GM probe to ascertain if any contamination has potentially been transferred into the canister. To date, no contamination of the canister or tether has been noted. Once the detector has been retrieved and the survey completed (the detector can be re-deployed for additional data if needed), the detector is removed from the end of the membrane. The membrane is then fed through a diaphragm to an external reel assembly or manually fed into a disposal drum. The membrane being handled has been inverted. Therefore, the side of the membrane that has been in contact with the contaminated pipe is contained within itself (this is analogous to the way a Hazmat worker removes rubber gloves). The inexpensive membrane (about $0.03/ft) is then disposed. This secondary waste generation is minimal. Several hundred feet of membrane is easily compacted into less than a cubic foot.

Capabilities Summary

The absolute maximum deployable distance of the system is currently limited by the length of cabling and canister size. The current configuration allows for 250-foot deployments. Longer distances may be achievable but no applications to date have required any longer attempts. Practical deployment lengths are limited by elbows in the lines and the diameter of the pipe. Table 1 lists typical results that have been achieved, in laboratory tests, and are used as general guidelines.

The Pipe Explorer™ system has been used to transport several different types of radiological measurement instruments. Table 2 lists these instruments and their descriptions.

SEA currently has two deployment systems available. The first is a fully automated system. With its motorized operation and built in deployment sensors it allows for continual unattended pipe surveys. The second system is a smaller, manually operated system.

Additional uses of the Pipe Explorer™ have been identified and have either been nominally demonstrated or are being integrated with the system. These include;

- Transport of pipe locating beacons
- Transport of video cameras
- Alpha detection methodologies

Table 1. Typical Deployment Lengths and Number of Elbows for Various Pipe Sizes.

Pipe Diameter (inches)	Number of 90° Elbows	Maximum Deployed Distance (feet)
1	0	50
2	2	200
3	4	250
4	4	250

Table 2. Radiological Instruments Used with the Pipe Explorer™ System.

Detector Type	Detection Mode	Notes
Bicron BC-404 Plastic Scintillator 1.25 inch x 1.95 inch	Beta	Large window offers high sensitivity beta detection. Compact package allows transport around 2-inch elbows.
Bicron BC-408 Plastic Scintillator 0.5 inch x 0.5 inch	Beta	Ruggedized packaging good for applications in pipe sizes 3-inches and up.
NaI(Tl) 2-inch x 2-inch crystal size	Gamma	Large crystal provides high sensitivity and good spectral resolution. Larger package size limits applications to pipe sizes greater than 4 inches.
CsI(Na) 1.125-inch x 1.188-inch crystal size	Gamma	Small package allows transport around elbows in 2-inch pipe.

Results

An extensive demonstration of the Pipe Explorer™ was conducted for the DOE Formerly Utilized Sites Remedial Action Program (FUSRAP) at a site in Adrian Michigan. During the 1950's the Bridgeport Brass Company operated a Special Metals Extrusion Plant at the site. This was done under contract with the DOE, then the Atomic Energy Commission. The product of this operation was material for uranium fuel elements for reactors in Hanford, Washington, and the Savannah River Plant in South Carolina. Uranium handled in this operation included depleted, natural, and up to 2.1 percent enriched in U-235. The site is still an active factory where plastic automobile parts, such as door panels and dash-boards, are extruded and finished.

During production of the uranium fuel elements, waste material from the extrusion process mixed with oil from the machinery. This mixture subsequently flowed into the oil drainage system contaminating over 1000 feet of buried drain-lines with varying amounts of uranium tainted oil. In order to quantify the extent and degree of this contamination and to conduct post-remediation measurements, the DOE FUSRAP hosted a demonstration of the Pipe Explorer™ system.

SEA conducted surveys at the site on two separate occasions. The first occurred in April 1995 and the second in May 1995. Thirteen surveys were carried out in eight drain-lines. Several lines were surveyed more than once to confirm success of remedial actions. Two Pipe Explorer™ deployment systems were used with 3 different radiological sensors. The first system used during the April demonstration was a manually operated system. Deployment with this system is controlled by a hand crank. Figure 3 shows the system in operation at the site. With this system, the detector is deployed to a specified location where the position of the detector and its output are recorded by the operator. Figure 4 shows data from one of the surveys conducted with the manually operated Pipe Explorer™ system in conjunction with a beta detector. The data was taken prior to any remedial actions. Thus, the drain-line had a substantial amount of thick oily sludge in it (about the consistency of peanut butter). The detector and its tether were successfully deployed and retrieved with none of the oily contamination coming into contact with the detector, tether, or workers. The data in Figure 4 was obtained with a detector designed and calibrated by the DOE Grand Junction Projects Office Radon Laboratory (Reference 1).

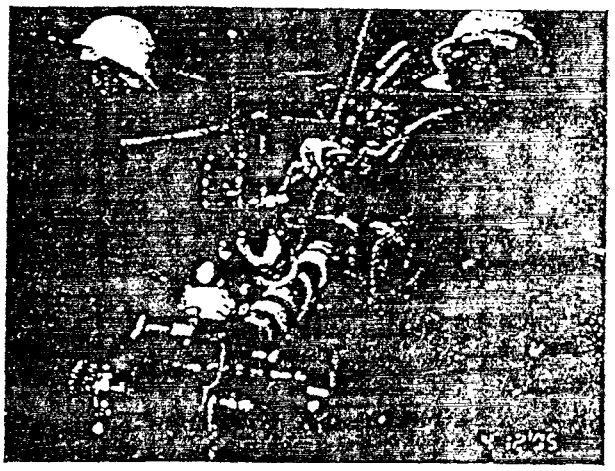

Figure 3. Operation of the Pipe Explorer™ system at the FUSRAP site. The membrane is being retrieved from a drain-line.

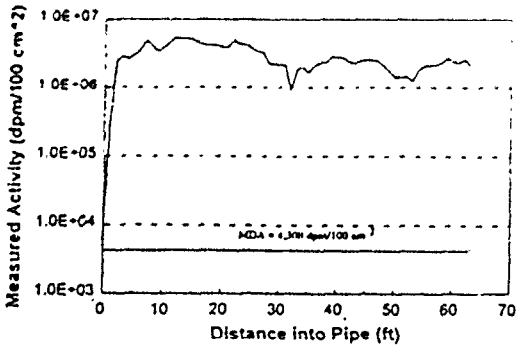

Figure 4. Surface activity measured in a 4-inch drain-line at the FUSRAP site with the manually operated Pipe Explorer™ system. These measurements were taken prior to removal of contaminated sludge from the drain-line.

For the second stage of the demonstration carried out in May 1995, the automated Pipe Explorer™ system was used with a higher sensitivity beta detector. The system canister includes a motorized reel and a deployment distance measurement sensor. Additional sensors in the canister such as a slack indicator, a tension meter, and pressure transducers enable the system to run with minimal operator interaction. All outputs from the sensors are displayed on a control panel. In addition, they are recorded and displayed on a laptop computer acting as a virtual instrument through a LabView® program. The radiological data is also recorded on the laptop so that surface activity as a function of distance into the pipe can be monitored in real time. Figure 5 shows the automated system in use at the FUSRAP site.

A sample of the data obtained with this system is shown in Figure 6. The actual drain-line begins at a distance of 27 feet. Since access to the drain-line was obtained through a deep manhole it was necessary to construct a conduit of this length to guide the membrane to the drain-line entrance. The structure of this data shows the utility of a continuous survey. The data shows a small amount of contamination up to the 40-foot mark in the drain-line. At this point the line intersects another drain-line which had been thoroughly cleaned. After the intersection, however, substantial contamination was encountered. The only exception was a relatively clean section between 90 and 100 feet.

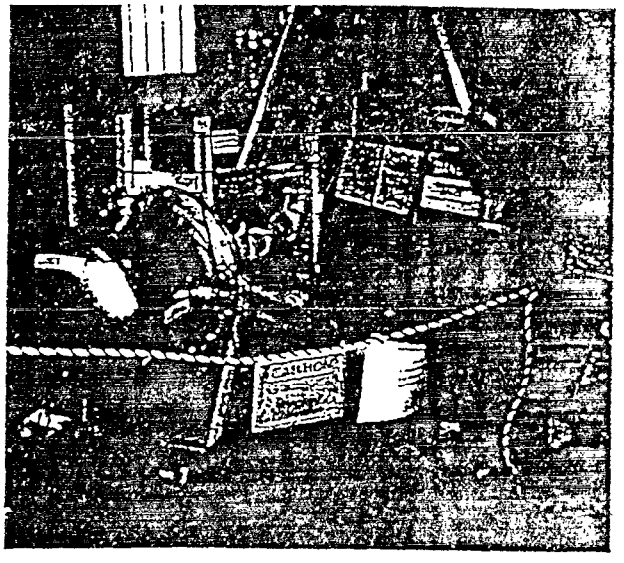

Figure 5. The fully automated Pipe Explorer™ system in use at the FUSRAP site. The deployment canister is on the floor to the left and the operator and control box are on the right. Note that the system is located outside of the radiological control zone.

Confirmation of the Data

Data obtained with the Pipe Explorer™ system at the FUSRAP site was verified with several methods. The first was purely qualitative, where the membrane was visually inspected as it was retrieved from the drain-line. This was useful in such instances as shown in Figure 6 where the data showed significant structure. For example, a large amount of the

oily sludge was noted on the portion of the membrane that had traveled 100 to 120 feet into the drain-line. The portion of the membrane around 98 feet had virtually no oil on it, but below 90 feet substantial amounts of the oily sludge were again seen on the membrane.

Another validation method used was to measure the activity of contamination adhering to the membrane as it was being retrieved. Measurements were taken with a conventional pancake GM probe. This data is shown as triangles in Figure 6. The distance accuracy for these measurements is substantially less than the accuracy of the Pipe Explorer™ data (pancake meter data accurate to approximately ±2 feet, Pipe Explorer™ accurate to ±1 inch). Surface activity measured with the Pipe Explorer™ is consistently higher than that measured with the pancake GM probe because the Pipe Explorer™ system measures the contamination in the pipe and the pancake GM probe measures only the contamination that adheres to the external surface of the membrane. Furthermore measurements with the pancake probe are not calibrated for attenuation effects of the membrane, whereas the data obtained by the Pipe Explorer™ system is.

Confirmation of the data was also attempted by pushing a small GM detector into the drain-line. However, contamination adhering to the GM probe assembly tended to obscure the measurement of contamination on the pipe wall.

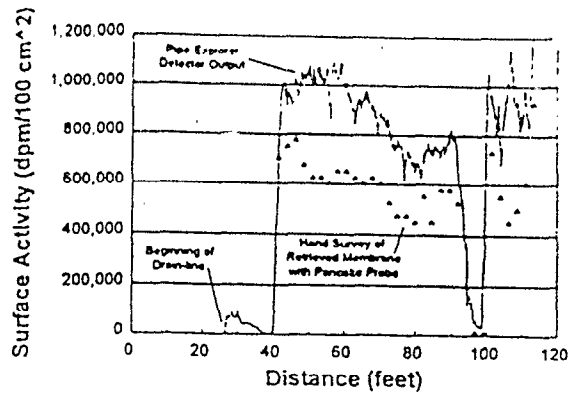

Figure 6. Survey of a drain-line at the FUSRAP site with the automated Pipe Explorer™ system (solid line). Triangular data markers show measurements of contamination on the membrane retrieved from the drain-line.

Detector Calibration

The ideal way to confirm the Pipe Explorer™ system data would have been to excavate a portion of a drain line and have it analyzed. However, the motivation for using the system at the FUSRAP site was to avoid excavating drain-lines. Therefore, confidence in the data was obtained through rigorous calibration of the detector.

Detectors used with the Pipe Explorer™ system are specifically calibrated for each use. They are calibrated with an isotope of similar energy of the contaminants that are suspected in a pipe and calibrated in the same measurement geometry. For example, since U-238 was suspected at the FUSRAP site, Sr-90 was used as a calibration source (U-238 is not available in sufficiently high activities for calibrations). The daughter product of Sr-90 (Y-90) emits a beta particle with similar energy as the dominant U-238 daughter product, Pa-234m. The Sr-90 calibration source has an known activity traceable to the National Institute of Standards and Technologies. Using this calibration source results in slightly elevated detection efficiencies because of a lower energy beta emitted by Sr-90 (546 keV max.). This emission is more heavily attenuated by air and the membrane material than the higher energy beta from Y-90, but no effort was made to determine this difference.

The significant added cost of assessing this effect on the calibrations was not deemed necessary, since the error was not considered significant (on the order of 20 percent) and it results in conservative measurements.

The calibrations were carried out to best simulate the measurement conditions that would be encountered at the FUSRAP site, where the detector rests on the bottom of a 4-inch pipe inside of a 4-mil polyethylene membrane. Therefore, all of the calibration measurements were made through a sample of the membrane material in 4-inch pipe. The fundamental procedure used in the calibrations was to move the calibration source to various grid locations surrounding the detector and determine the probe response at each location. The response of the detector to the Sr-90/Y-90 source was integrated over all angular and axial positions to determine detector response to distributed contamination inside of 4-inch pipes. The response of the detector to a check source in a fixed geometry was recorded immediately before and after the detector calibrations. The check source measurement was repeated prior to and after each drain-line survey at the FUSRAP site to verify the detector performance had not changed since the calibrations.

Benefits

The use of the Pipe Explorer offers many technical benefits. These include;

- 100% gamma and beta surveys of pipe interiors, even in buried pipes.
- 100% alpha surveys of pipe interiors (available soon)
- Detector does not become contaminated
- Removable contamination is not spread along pipe.
- Personnel exposure significantly reduced.
- Immediate results.

Technical benefits such as the ones listed above for the Pipe Explorer™ are usually heralded as the pay-off for a DOE investment in a new technology. However, the primary reason the DOE provides funding for development of environmental technologies is so that economic benefits will result through more expedient and cost effective methods. Substantial cost savings have already been realized from use of the Pipe Explorer™ system at the FUSRAP site demonstration. **These cost savings to the DOE are nearly three times the amount invested in the development of the Pipe Explorer™ system.**

The DOE FUSRAP recognized that the cost of excavating buried drain-lines at the site in Adrian MI would be substantial. Therefore, they developed a methodology to avoid these excavation costs. The plan was to verify that activity levels of contamination in the pipes were below a criteria level of $7x10^5$ dpm/100cm^2 (averaged over the length of the drain-lines). It was determined through a hazard assessment that such levels of contamination posed no threat to the general population. Thus, the drain-lines could be left in place after sealing the contamination with grout. If surface activities were found in excess of the criteria level then the drain-lines were to be flushed and cleaned prior to grouting.

The initial method that was used to characterize the drain-line was to insert a small geiger-mueller (GM) detector directly into the drain lines. This was soon found to be an ineffective method because of the abundance of removable contamination present. The contaminated oil would adhere to the detector, making it difficult to differentiate between measurements of contamination on the pipe walls and contamination directly on the detector. In addition, only limited lengths of the drain-lines could be accessed since in many cases the detector could not be shoved around elbows.

The benefits of using the Pipe Explorer™ over direct insertion of a detector were readily seen in surveys of one of the drain-lines. Data initially obtained with the manually operated Pipe Explorer™ system from this drain-line is shown in Figure 6. Activity levels in the pipe were found in excess of the $7x10^5$ dpm/$100cm^2$ criteria level. The drain-line was then cleaned and a subsequent survey was conducted. Activity levels were found substantially reduced with the exception of a hot spot near the beginning of the drain-line. A detector manually inserted into the pipe would have come into contact with this hot spot and measurements through the rest of the drain-line would have been inaccurately high. Therefore, the Pipe Explorer™ system provided accurate results showing that the drain-line was within the criteria level. Similar results were obtained in the other seven drain-lines surveyed.

Had accurate data not been available from the Pipe Explorer™ system there would have been no way to assess activity levels in the drain-lines. Therefore, it would have been necessary to excavate them. It is estimated that the costs to excavate the drain-lines would have been on the order of $1.2 million (Ref. 2). However, this estimate neglects the fact that the site is an active automotive parts factory. Therefore, costs associated with plant impacts and relocating factory operations should also be included. Factory personnel have good estimates of these costs from prior experiences of modifications to the plant. Their estimate of these costs are about $0.8 million. The cost savings were diminished somewhat by the expense of cleaning the drain-lines and disposing of the waste generated from the cleaning. This cost is estimated at $0.5 million. Therefore, the net savings is estimated to be;

$1.2 +$0.8 -$0.5 = $1.5 million

It is interesting to note that the cost of surveying excavated drain-lines with the Pipe Explorer™ system was included in the excavation cost estimate. This was done since characterization of waste is necessary prior to disposal. Therefore, whether the drain-lines were left in place or excavated, the FUSRAP remediators identified a need for the Pipe Explorer™ system.

Future Activities

The development of the basic Pipe Explorer™ system which includes gamma and beta detection capability is nearing completion. The final aspect of this phase of development is to demonstrate the system at ORNL during October 1995. Video inspection capability of the system will be demonstrated along with radiological surveys.

After this time the system will be available for service work as an inspection tool. A great deal of interest has already been expressed in using the system at;

- Rocky Flats
- Los Alamos National Laboratory
- Sandia National Laboratory
- Other FUSRAP Sites
- and Argonne National Laboratory

In July of 1995 an the development of an enhancement to the system was funded by the DOE METC. This will enable the system to be used for detecting low levels of alpha emitting contaminants such as Pu-239. This will be accomplished by making the inverting membrane component of the system an alpha sensitive scintillator. A photo-detector, towed through the membrane, much the same way as gamma and beta detectors, will quantify activity levels as a function of length over 100% of the internal surface area (for more information see

related paper in these proceedings). After this enhancement is added to the system, complete alpha/beta/gamma surveys will be possible with the Pipe Explorer™ system.

Acknowledgments

SEA wishes to thank Mr. C. Edward Christy of METC for his diligent and enthusiastic support as COR of the Pipe Explorer™ system development. SEA also wishes to thank Mr. Al Tardiff of EM-50 who has helped in finding demonstration sites for the system. We also thank Mr. James D. Kopotic of the FUSRAP for agreeing to host the demonstration of the Pipe Explorer™ system. Finally we wish to thank Mr. Marty Keller and Mr. Gil Drexel of Bechtel along with the site crew at the FUSRAP site who were all extremely helpful in the successful demonstration of the system.

References

1) M.J. Rangel, D. E. Martz, and G. H. Langner, "Gamma and Beta Logging of Underground Sewer and Process Lines," DOE/ID/1584-45, November 1989.
2) FUSRAP Productivity Improvement Program (PIP) Submittal, Bechtel National, Inc, April 1995.

APPENDIX B

WASTE MANAGEMENT SUMMARY

WASTE MANAGEMENT SUMMARY
FOR THE GENERAL MOTORS SITE IN ADRIAN, MICHIGAN

The decontamination of the GM site was conducted in a manner that reduced expenditures and minimized waste volume while expediting the remedial action. The volume and waste streams that were produced at the GM site are listed in Table B-1. None of the excavated material was used as fill material; all of it was disposed of as low-level-radioactive waste (LLRW). The quantity of waste material was minimized by using a Pipe Explorer™ during pipe surveys and obtaining a local water treatment and processing company for the accumulated water instead of adding an absorbent material and increasing the volume to be shipped as LLRW for disposal.

Use of the Science and Engineering Associates, Inc. (SEA) Pipe Explorer™ significantly minimized waste by reducing investigation-derived waste (including personal protective equipment and decontamination and other materials) and by reducing the volume generated to gain access to the piping systems by conventional methods (excavating to the pipe for surveys and removal).

Use of the Pipe Explorer™ allowed for a hazard assessment encompassing the entire site (most uranium material was found within the piping systems), which significantly reduced the total volume removed from the site and the costs of the removal action.

TABLE B-1

REMEDIAL ACTION SUMMARY

WBS 141

SITE Bridgeport Brass Company Special Metals
OWNER General Motors Corporation
SITE ADDRESS 1450 Beecher Street
CITY, STATE Adrian, Michigan

REMEDIATION AUTHORITY

- ☐ NEPA/CERCLA
- ☐ SUPERFUND
- ☐ RCRA

ACTION	DATE	RESPONSIBLE ENTITY	DOCUMENT
DESIGNATION	00-00-1990	DOE	Designation/Authorization Report
CHARACTERIZATION	04-1982	ORNL	Radiological Survey of the Former Bridgeport Brass Company Special Metals Extrusion Plant Site in Adrian, Michigan.
FINAL RA	4/95 - 7/95	DOE/ORNL/BNI	Post-Remedial Action Report for the Remedial Action at the General Motors Site in Adrian, Michigan.

TOTAL VOLUME 174 yd^3
To Remain In Situ 0
Volume Reduction 0
Net Disposal 174 yd^3

Documentation Used:
Waste shipping record, CCN 133298

TYPE OF WASTE FOR NET DISPOSAL:

REGULATORY	VOLUME	DISPOSAL SITE
☐ LLRW	174 yd^3	Clive, Utah
☐ 11(E)2		
☐ MIXED		
☐ CHEMICAL		
PHYSICAL		
☐ BUILDING RUBBLE		
☐ SOIL		
☐ LIQUID	6,150 gal water	Environmental Waste Control
OTHER Solidified sludges and oil	174 yd^3	

TREATMENT TECHNOLOGIES APPLIED AT THE SITE:
Macroencapsulation and stabilization.