APPENDIX A: REACTOR DESIGN AND LAYOUT ILLUSTRATIONS

System Layout 1: Flow Information

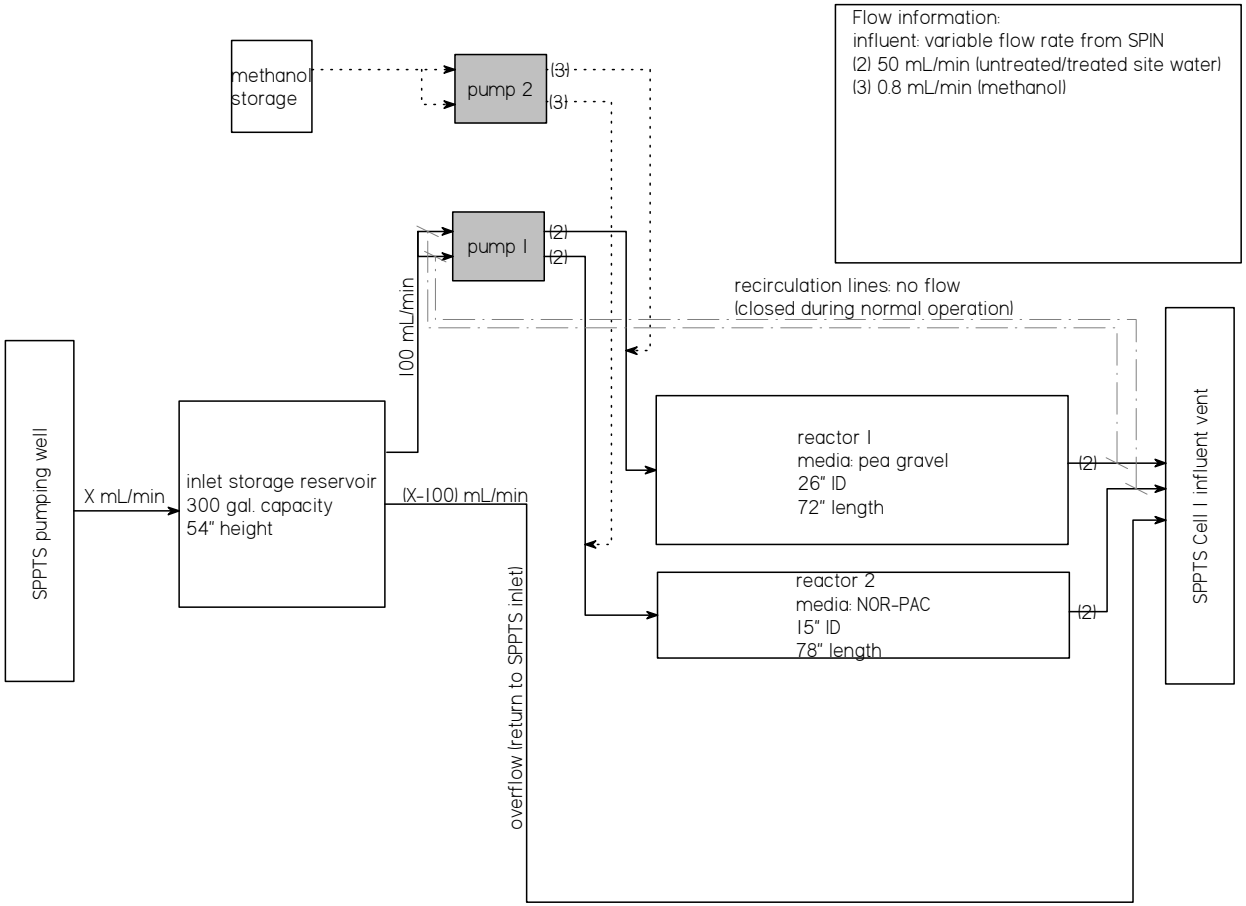

Note: All flow routed back into SPPTS Cell 1 to ensure adequate treatment for nitrate and uranium.

System Layout 2: Plumbing Information

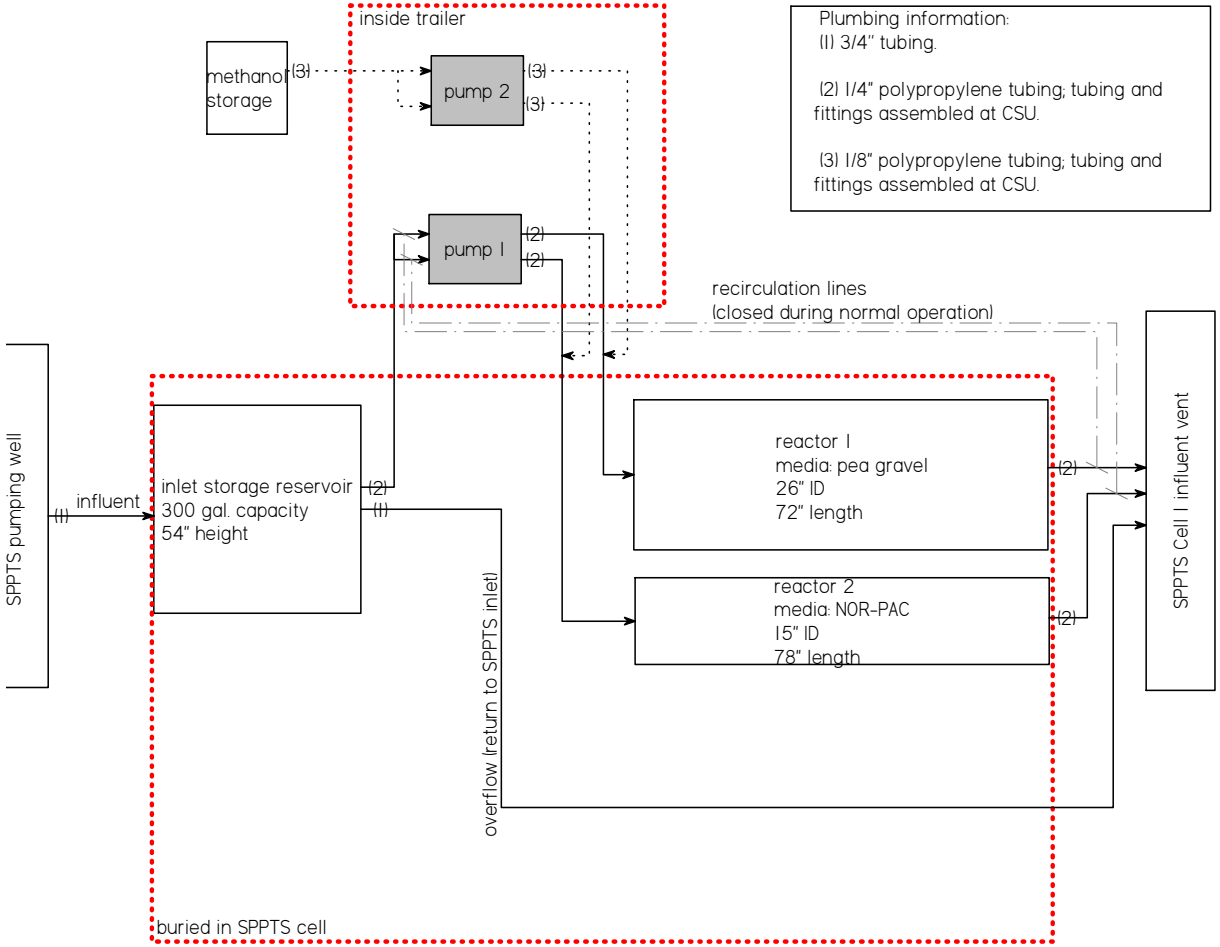

Note: All flow routed back into SPPTS Cell 1 to ensure adequate treatment for nitrate and uranium

Reactor Design Schematic

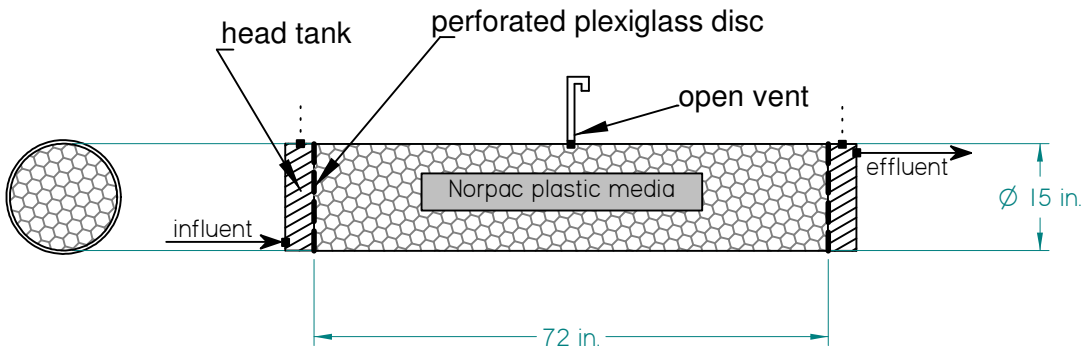

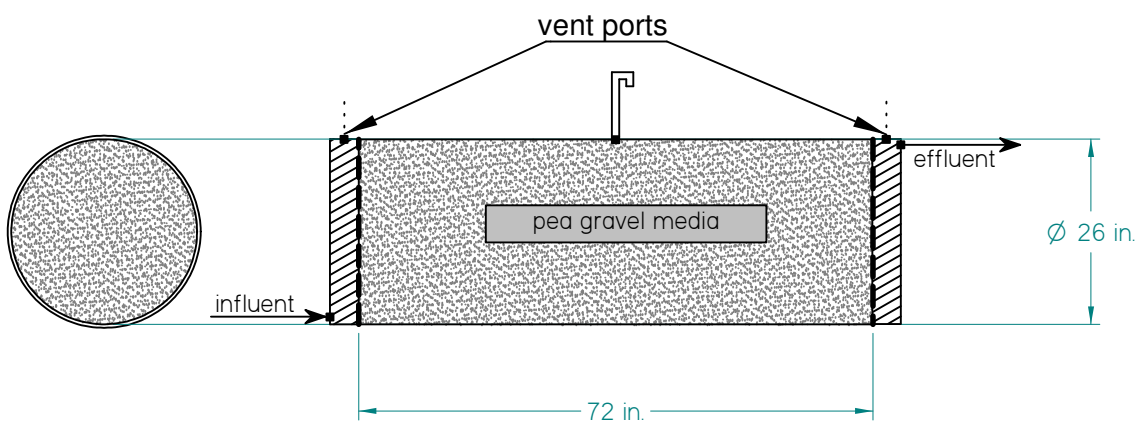

Notes: (1) dimenstions refer to inside of reactor; (2) open vent (near center) and vent ports (upstream and downstream head tanks) are included on both reactors, but only labeled on one; (3) the head tank refers to the open area at the end of each reactor used to distribute head pressure upstream and downstream of the reactor; (4) the perforated plexiglass disc is added to distribute flow throughout the entire cross section of media.