Department of Energy
Oak Ridge Operations
Weldon Spring Site
Remedial Action Project Office
Route 2, Highway 94 South
St. Charles, Missouri 63303

December 11, 1990

Addressees:

SCREENING LEVEL CHARACTERIZATION OF ELECTRICAL SUBSTATION 411 REPORT

Enclosed for your information is the subject document. This report contains data necessary to prepare a subcontract package for the removal of all transformers and dielectric fluids contained in substation 411.

If you have any questions please call Ken Lawver at (314)441-8978.

Sincerely,

for Stephen H. McCracken, Acting
Project Manager
Weldon Spring Site
Remedial Action Project

Enclosure:
As stated

DISTRIBUTION LIST

Mr. Dan Wall
Superfund Branch
U.S. Environmental Protection Agency
Region VII
726 Minnesota Avenue
Kansas City, Kansas 66101

Mr. Steve Iverson, Project Manager
Superfund Branch
U.S. Army Corps of Engineers
Kansas City District
601 East 12th Street
Kansas City, Missouri 64106
ATTN: CEMRKED-TD

Mr. Karl J. Daubel
Environmental Coordinator
Weldon Spring Training Area
7301 Highway 94 South
St. Charles, Missouri 63303

Mr. Ali Alavi
Project Manager
U.S. Army Toxic & Hazardous Materials Agency
ATTN: CETHA-IR-A
Building E4435
Aberdeen Proving Ground, Maryland 21010-5401

Dr. David E. Bedan
Division of Environmental Quality
Missouri Department of Natural Resources
Post Office Box 176
Jefferson City, Missouri 65102

Mr. William Adams, EW-90
Acting Assistant Manager for Environmental Restoration & Waste Management
Oak Ridge Operations Office
U.S. Department of Energy
Post Office Box 2001
Oak Ridge, Tennessee 37831-8541

Mr. Peter J. Gross, SE-31
Director of Environmental Protection Division
Oak Ridge Operations Office
U.S. Department of Energy
Post Office Box 2001
Oak Ridge, Tennessee 37831-8738

Mr. J.D. Berger
Oak Ridge Associated Universities
230 Warehouse Road
Building 1916-T2
Oak Ridge, Tennessee 37830

Kisker Road Branch
St. Charles City/County Library
1000 Kisker Road
St. Charles, Missouri 63303

Spencer Road Branch
St. Charles City/County Library
425 Spencer Road
St. Peters, Missouri 63376

Mr. Robert Shoewe, Principal
Francis Howell High School
7001 Highway 94 South
St. Charles, Missouri 63303

Kathryn M. Linneman Branch
St. Charles City/County Library
2323 Elm Street
St. Charles, Missouri 63301

Administrative Record
MK-Ferguson Company
7295 Highway 94 South
St. Charles, Missouri 63303

Mr. Park Owen
Remedial Action Program Information Center
Oak Ridge National Laboratory
Martin-Marietta Energy Systems, Inc.
Post Office Box 2008
Oak Ridge, Tennessee 37831-6050

DISTRIBUTION LIST

Distribution
Office of Scientific and Technical
Information
U.S. Department of Energy
Post Office Box 62
Oak Ridge, Tennessee 37830

Dr. Margaret MacDonell
Energy and Environmental Systems
Division
Argonne National Laboratory
9700 South Cass Avenue,
Building 362
Argonne, Illinois 60439

3589-87-I-EPA-011

UNITED STATES ENVIRONMENTAL PROTECTION AGENCY

REGION VII
726 MINNESOTA AVENUE
KANSAS CITY, KANSAS 66101

NOV 9 1987

M-K FERGUSON CO.
RECEIVED
NOV 10 1987
WSSRAP CONTRACT 3589

Mr. Rodney R. Nelson
U.S. Department of Energy
Weldon Spring Site Remedial
Action Project/Office
Route 2, Highway 94, South
St. Charles, Missouri 63303

Dear Mr. Nelson:

We have reviewed the material you provided on the following interim response actions proposed for the Weldon Spring site:

1. Dismantling of Building 401
2. Dismantling of Building 409
3. Removal of PCB Transformers
4. Debris Consolidation

These actions, as with the four other interim response actions we have reviewed, should be useful in preparing for long-term remedial actions and have positive effects on health and safety and the environment. The documents developed in support of these proposals represent a significant improvement over those developed for the previous actions. Generally, we believe that a more thorough analysis and screening of response alternatives would be appropriate. Also, the documents do not contain sufficient detail of the work to be done to stand alone without the support of the technical specifications and drawings. Other comments and recommendations regarding these interim response actions are discussed below.

Building Demolition

- More specifics regarding the handling, storage and ultimate disposal of radioactively contaminated waste should be presented.
- The specifications state that "..., if chemically hazardous or toxic material is suspected or encountered, the Contractor shall be immediately notified...". What guidelines will be used by the demolition subcontractor to determine the hazard potential of unknown materials?
- The responsibility for determining whether a pollution condition has or will be created should be clearly specified.
- The specification does not state the health and safety requirements for the subcontractor.

CC's: X R Lewis
RA Nelson
AJ Stewart

DOCUMENT NUMBER: ~~1.02~~
I-100-101-1.02

PCB Transformer Removal

In this case, more detail in the site characterization section of the text would be appropriate. For instance, the PCB transformers are catagorized as those containing PCBs at concentrations greater than 500 ppm. It may be somewhat misleading not to indicate in the text that the concentrations in these transformers are in excess of 350,000 ppm.

Disposal facilities under consideration for receipt of these wastes must provide certification that they meet the Superfund offsite policy.

Debris Consolidation

It is stated in the description of the response action that one of the response objectives is to "Perform a detailed chemical and radiological characterization of the debris...". The description of the response action and specifications document contain no guidelines, references or information which would allow the subcontractor to complete this objective.

More specifics regarding the handling, storage and ultimate disposal of radioactive contaminated waste are needed.

If there are any questions, please do not hesitate to call.

Sincerely yours,

Katie

B. Katherine Biggs
Chief, Environmental Review Branch

cc: Dave Bedan, MDNR

PROCESS FLOW CHART FOR DOE'S PROPOSED WASTEWATER TREATMENT AT THE WELDON SPRING SITE

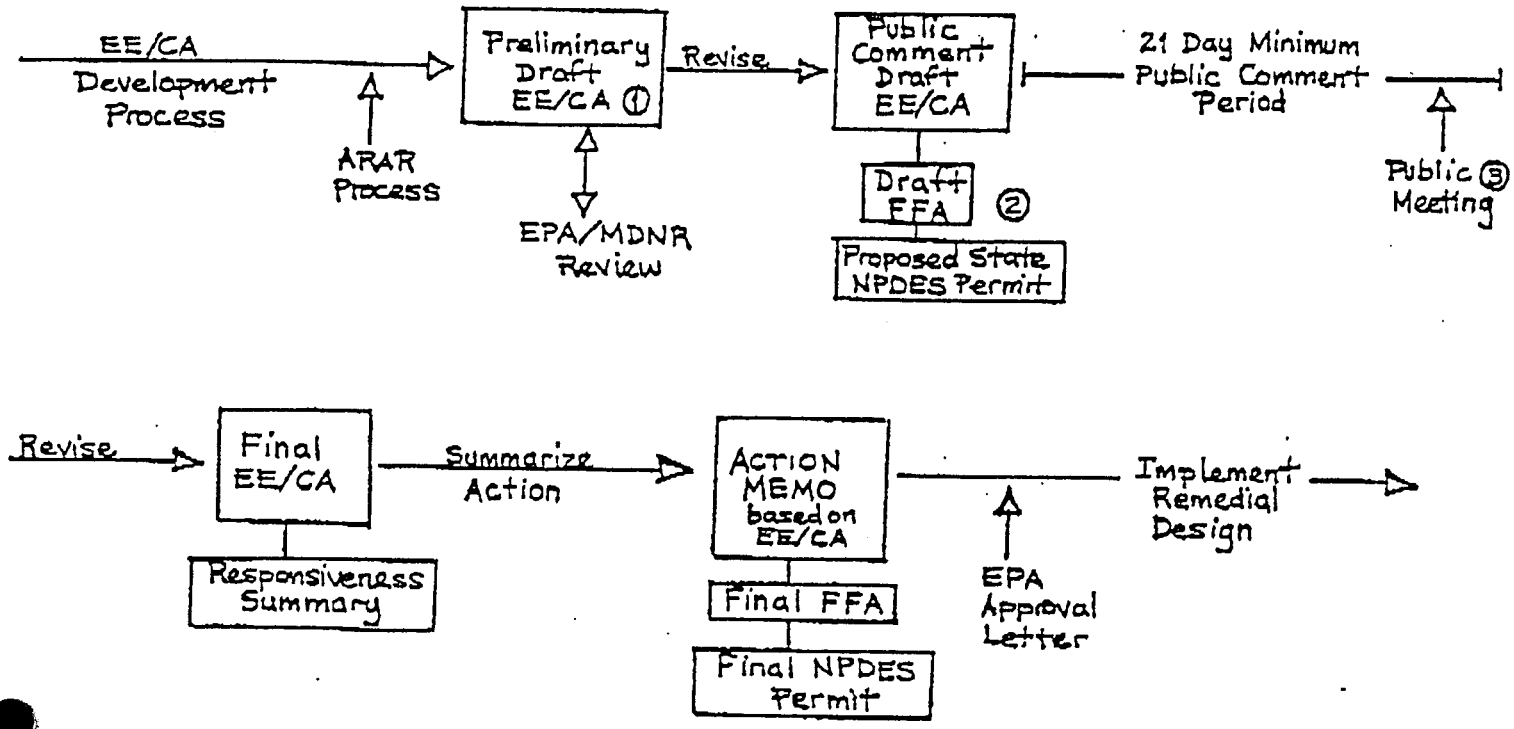

1. Effluent limits are proposed by DOE based on BAT and/or ARARs.
2. It would be desirable to make the FFA and NPDES permit (if necessary) available for public comment along with the EE/CA.
3. Timing of the public meeting can vary, however it is desirable to hold it after the EE/CA is made available for public comment so that it provides an opportunity for oral comment.

DRAFT