G-000-106.33

42

FEED MATERIALS PRODUCTION CENTER ENVIRONMENTAL MONITORING ANNUAL REPORT FOR 1975

04/01/76

NLCO-1133
NLO/ERDA
32
REPORT

G-000-0042

PROPERTY OF
U.S. DEPT. OF ENERGY
REFERENCE MATERIAL
G-000-106.33

DO NOT REMOVE

NLCO-1133
Special

FEED MATERIALS PRODUCTION CENTER
ENVIRONMENTAL MONITORING ANNUAL REPORT
FOR 1975

Prepared by

HEALTH AND SAFETY DIVISION

NATIONAL LEAD COMPANY OF OHIO
P. O. Box 39158
Cincinnati, Ohio 45239

Contract No. E(30-1)-1156

Date of Report: April 1, 1976

UNITED STATES ENERGY RESEARCH & DEVELOPMENT ADMINISTRATION
CINCINNATI AREA

Printed in the USA. Available from
National Technical Information Service, U. S. Department
of Commerce, 5285 Port Royal Road, Springfield, VA. 22161
Price: Printed copy $4.00; microfiche copy $2.25.

HS
Env '75

CONTENTS

	Page
Introduction	1
Summary	3
Area Features	3
Environmental Standards	5
Sample Collection and Analyses	6
Monitoring Data	13
Total Radionuclides Released	21
Radiation Exposure Estimations For 1975	21
Other Environmental Controls	25
References	29
Distribution List	30

FIGURES

1	Area Map	2
2	Feed Materials Production Center Environmental Features	8
3	Waste Disposal Flow Diagram	10
4	FMPC And Surrounding Area	11

TABLES

1	Radioactive Contaminants in Air	15
2	Non-Radioactive Contaminants in Air	16
3	Radioactive Contaminants in Water	17
4	Non-Radioactive Contaminants in Water	19
5	Hydrogen Ion Concentration	19
6	Uranium In Soil	20
7	Uranium in Miami River Sediment	20
8	Sewage Treatment Plant Data	26

INTRODUCTION

The Feed Materials Production Center (FMPC) is an industrial facility owned by the United States Energy Research & Development Administration and operated by the National Lead Company of Ohio. It is located on a 1050-acre site about 20 miles northwest of Cincinnati, Ohio. Several rural communities are 1-3 miles away. See Figure 1 for a map of the area.

The primary work at the FMPC is the production of purified uranium metal and compounds for use at other ERDA sites. In regard to U^{235} content, the uranium may be depleted, normal, or slightly enriched. The average content is close to normal.

Uranium production may begin with ore concentrates, recycled uranium from spent reactor fuel, or with various compounds from other ERDA sites. Impure starting material is dissolved in nitric acid and the uranium is extracted into an organic liquid and then back-extracted into dilute nitric acid to yield a solution of uranyl nitrate.

Evaporation and heating convert the nitrate solution to uranium trioxide (UO_3) powder. This compound is reduced to uranium dioxide (UO_2) with hydrogen and then converted to uranium tetrafluoride (UF_4) by reaction with anhydrous hydrogen fluoride. Uranium metal is produced by reacting UF_4 and magnesium metal in a refractory-lined reduction vessel. This primary uranium metal

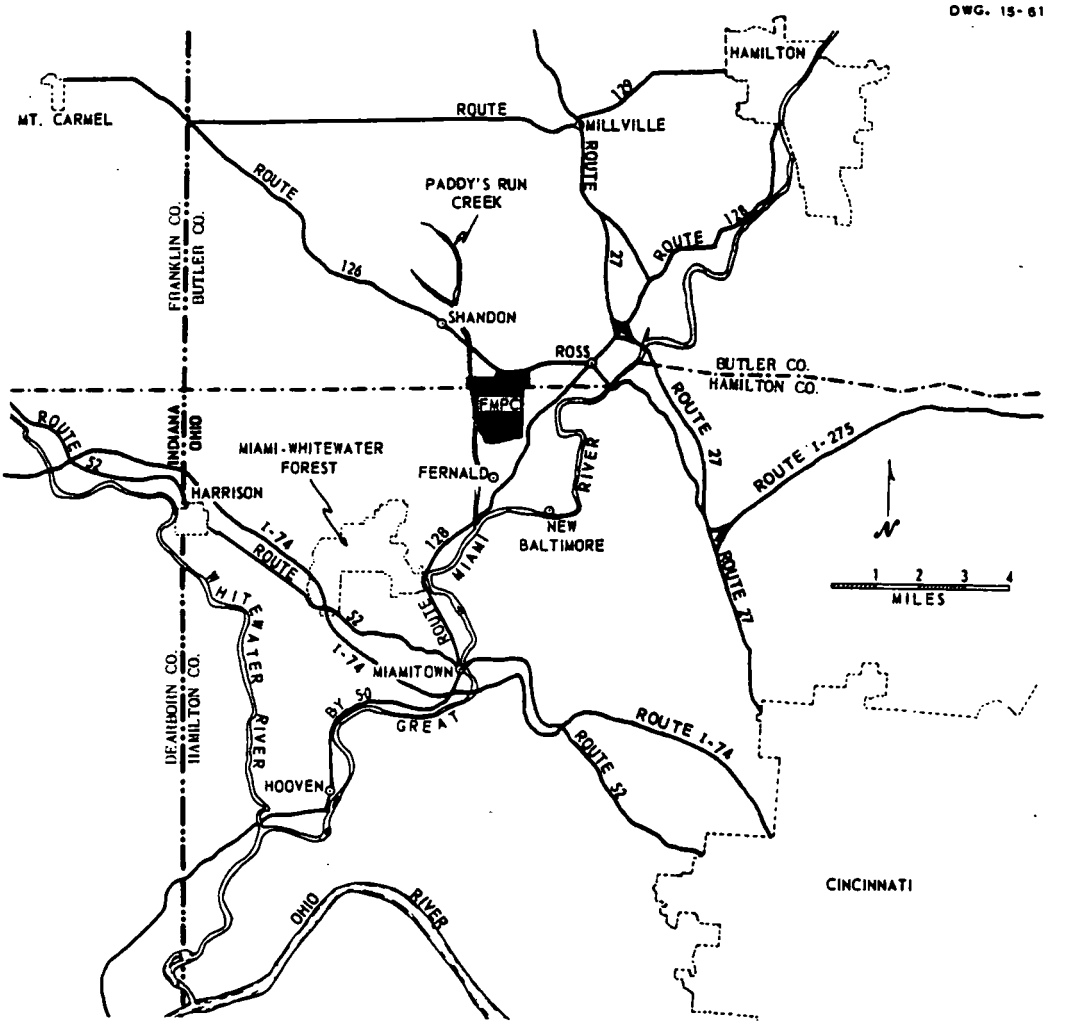

FIGURE 1 Area Map

is then remelted with scrap uranium metal to yield a purified uranium ingot which is extruded to form rods or tubes. Sections are then cut and machined to final dimensions. These machined cores are shipped to other ERDA sites for canning and final assembly into reactor fuel elements.

Periodically, small amounts of thorium are processed. Thorium production steps, in general, are similar to those followed in uranium production. Final products may be purified thorium nitrate solution, solid thorium compounds, or metal.

SUMMARY

This report contains environmental monitoring data collected at the FMPC during 1975. These data show that the average boundary concentrations of radioactive contaminants from FMPC operations were no greater than 0.7% of the guide levels published in ERDA Manual Chapter 0524.[1] The resulting offsite radiation exposures would, therefore, be a small fraction of the standards for uncontrolled areas.

Concentrations of environmentally important non-radioactive contaminants in water and air are also reported. Results show that FMPC operations did not cause state standards for these contaminants to be exceeded.

AREA FEATURES

Glacial action during the time of the Illinoian and Wisconsinan ice sheets gave the area its basic geological features. In the

FMPC area, outwash from retreating glaciers filled in the wide valley of a large ancient river. Through this fill, the Miami River has cut its present course and the river bed is now located about 60 feet below the original level of the glacial deposits. Underlying the FMPC is about 50 feet of a clay-rich till which may be a remnant of a large glacial moraine. Beneath the till is about 150 feet of sand and gravel which fills the buried valley of the pre-glacier river. In the FMPC area, that ancient valley is about three miles wide.

The area east of the FMPC, in the Miami River floor plain, has fertile soil and is reported to contain some of the best farm land in the state. In the gently rolling uplands west of the flood plain, the thin soil mantle over the glacial drift is less fertile.

Although there are several small industries nearby, the major economic activities in this rural area are farming, dairying, and the raising of beef cattle. Farm crops include sweet corn, field corn, soybeans and wheat. Truck crops are widely grown and sold at local produce stands and in nearby urban markets.

The glacial fill and the Miami River have provided two other important area products--ground water and gravel. A company located about one mile from the FMPC pumps out about 20 million gallons of ground water per day, chiefly for industries in and near Cincinnati. Pumping began just before the FMPC was built. The

permeable glacial deposits, called valley-train, house the bountiful deep aquifer from which the water company and the FMPC draw supplies. The Miami River continuously provides part of the aquifer recharge.

Gravel pit operations are a familiar sight in the Miami Valley. Some operations are located along the river, with a sand dike separating gravel washwater from the river. Other operations are within the floor plain, but are several hundred feet from the river.

Upstream from the FMPC, the river receives substantial amounts of industrial and municipal wastes. The cities of Dayton, Middletown, Hamilton, and Fairfield are major contributors. Little recreational use is made of the river. Downstream from the FMPC, the population is sparse and industries are small and scattered. About 18 miles away, the Miami meets the Ohio River.

In 1975, the total precipitation measured at the FMPC was 41 inches. Monthly maximum and minimum values were 5.6 inches during March and 1.5 inches during July.

ENVIRONMENTAL STANDARDS

There are several sets of standards which can be applied to environmental samples collected in connection with FMPC operations. These standards have been set by ERDA and the State of Ohio Environmental Protection Agency (OEPA).

ERDA specifies limits for radionuclides in air and water which must be followed by contract operators such as the National Lead Company of Ohio.[1] These criteria are concentration guides for work areas and for offsite areas which are beyond ERDA control.

For environmental monitoring purposes, ERDA criteria for air and water in uncontrolled areas are used as standards. At the FMPC, criteria for offsite or ambient air are applied to samples collected at the plant boundary. Criteria for offsite water are applied to river samples collected downstream from the point where the plant effluent reaches the river, but upstream from any known use of the water as a drinking water supply.

Criteria used for non-radioactive contaminants in ambient air are those established by the Ohio EPA.[2] Water quality criteria adopted by the Ohio EPA are mainly concerned with non-radioactive contaminants, but several radioactivity limits are included.[3] State water quality standards apply to the river, beyond a mixing zone permitted for industrial and municipal effluents.

SAMPLE COLLECTION AND ANALYSIS

Air. Conversion of impure uranium and thorium compounds to reactor-grade feed materials involves operations which generate radioactive dust, nuisance dusts, and corrosive mists or reaction products. Ventilation and air cleaning systems are used to confine

this air and remove airborne contaminants, including valuable material which is returned to the production processes. The filtered or scrubbed air is exhausted to the atmosphere. Sampling of these stack exhausts is maintained on a continuous schedule to determine the operating condition of the air cleaning systems.

Samples of particulate matter in air are continuously collected at six permanent sampling stations located on the project's outer boundary (see Figure 2). At each boundary station, air is drawn at a rate of about one cubic meter per minute through an 8 inch x 10 inch filter which is changed weekly. Filters are weighed before use and then reweighed after changing to obtain the weight of collected dust. After reweighing, the filter and its collection of dust is dissolved in acid and the solutions are analyzed for uranium and alpha and beta radicactivity. Counting is done about seven days after the end of the collection period. After these analyses are completed the remaining solution is held to provide a long-term composite for thorium analyses. Frequent thorium analyses are not considered necessary because of the small amount of thorium processed and the low concentration of thorium found in the boundary samples. Because of the low concentrations, analysis of annual composites for each station is considered adequate.

Periodically during the year, air samples were collected at boundary station no. 3 for the determination of nitrogen dioxide and gaseous

FIGURE 2
FEED MATERIALS PRODUCTION CENTER
ENVIRONMENTAL FEATURES

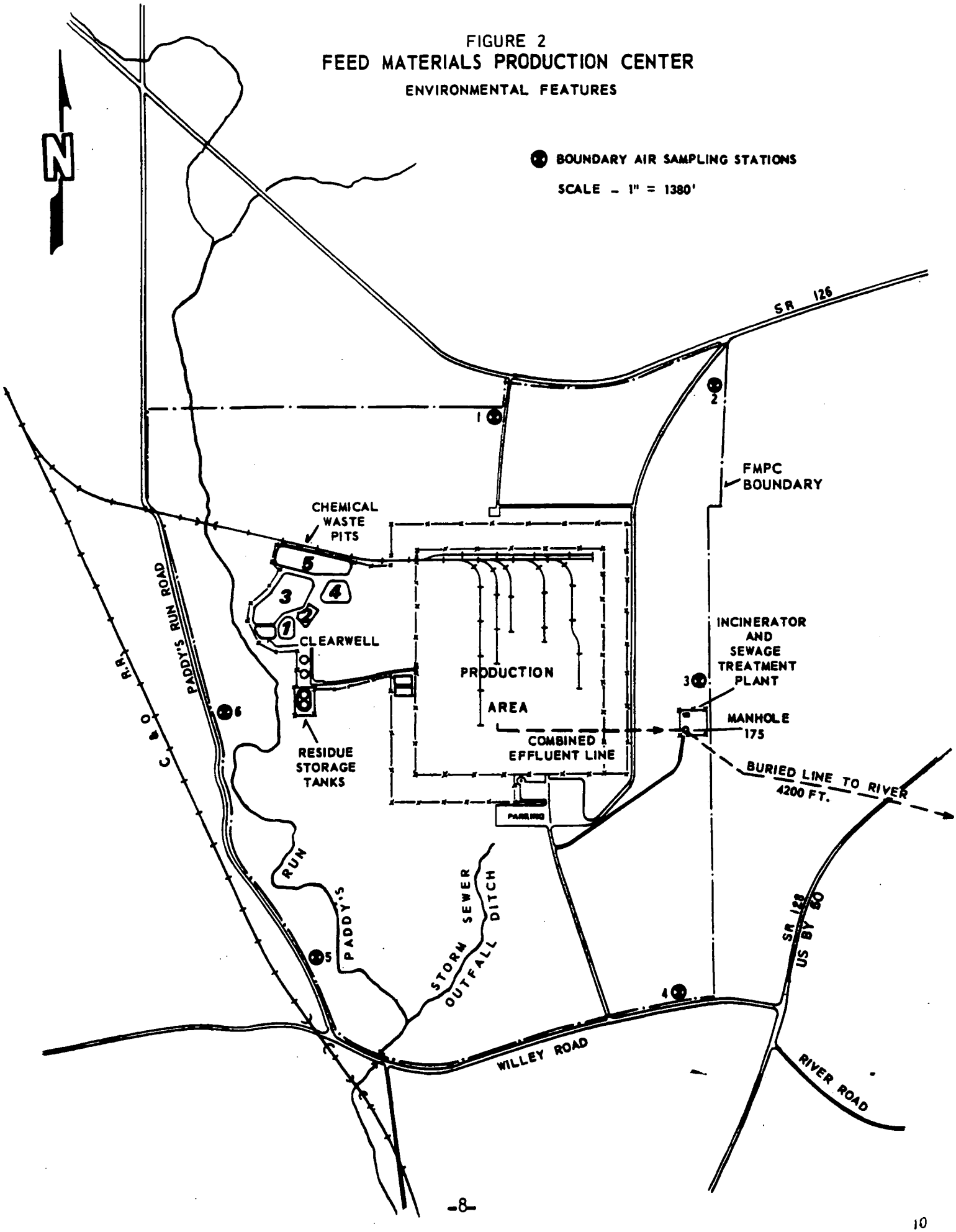

fluoride. The NO_2 samples were collected for 24-hour periods and the fluoride samples were collected for periods varying from one to five days.

Water. Each of the individual production plants on the project has sumps and equipment for the collection and initial treatment of process waste water. Uranium and thorium may be recovered as part of the treatment. Effluents from the plants are collected at a central facility, called the General Sump, for additional treatment. The treated wastes are filtered or are discharged into a large pit where the solids settle to the bottom. Both the filtrate and clear effluent from the pit are combined with the other water streams and discharged to the Great Miami River. See Figure 3 for a diagram of the process.

Water samples are collected at several points to determine the effect of the effluent upon the river. Locations are shown in Figure 4. At point W1, upstream from the effluent discharge, a daily grab sample is collected. At the final access point on the waste line, a Parshal Flume type water sampler continuously collects a sample which is proportional to the total flow. Twenty-four-hour samples from this point are collected daily for analyses. Results of these analyses, combined with river flow measurements, are used to calculate the average contaminant concentrations added to the river at point W2. At point W3, downstream on the river from the discharge point, 24-hour samples are collected by a continuous sampler.

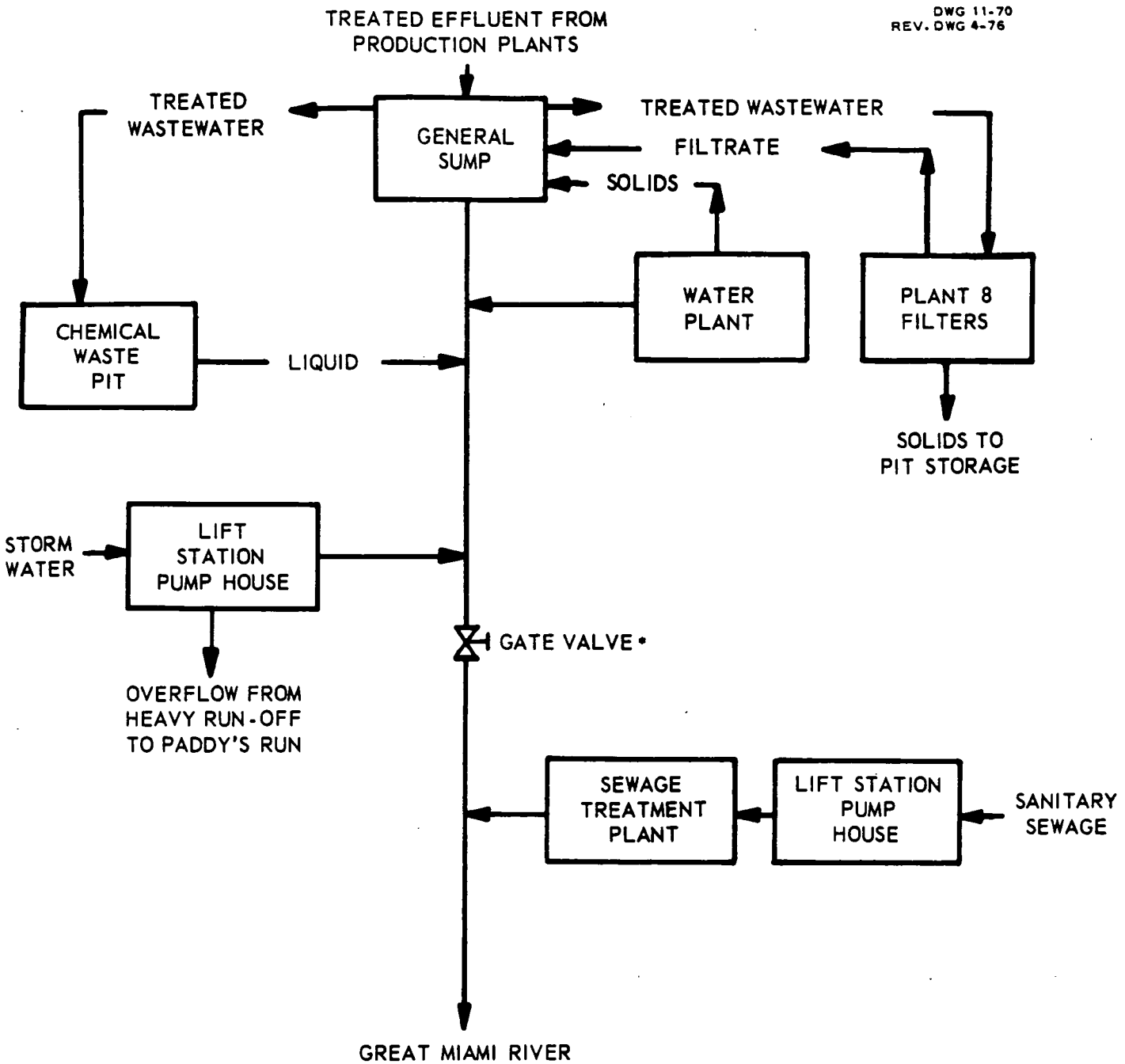

**Storm sewer water can be diverted to the Chemical Waste Pit or the General Sump by first halting the pumping from both locations and then closing the gate valve.*

FIGURE 3 Liquid Waste Streams

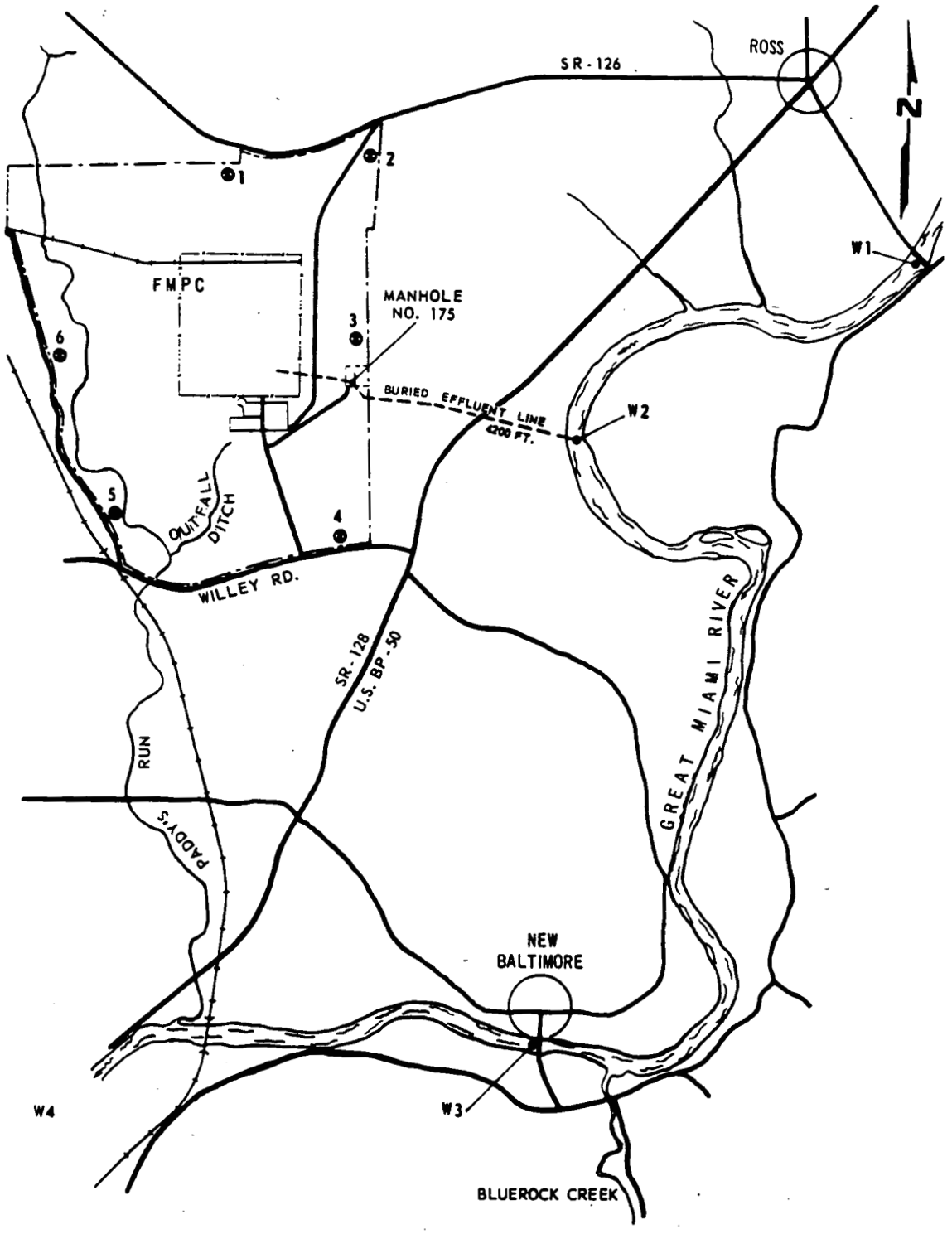

W4 is located at Miamitown,
4.7 miles from Paddy's Run.

FIGURE 4 FMPC and Surrounding Area

BOUNDARY AIR SAMPLING STATIONS.
W1, W3 & W4 - WATER SAMPLING LOCATIONS.
W2 - POINT OF PLANT DISCHARGE
SCALE: 1" = 3055'.

Point W4 is at Miamitown, 4.7 miles downstream from the mouth of Paddy's Run. Grab samples are collected weekly at this point. Paddy's Run is a small stream which flows along the site's west edge and joins the Miami River about two miles away from the FMPC southern boundary. During periods of heavy run-off, excess water in the storm sewer system overflows to a drainage ditch which discharges into Paddy's Run. Under normal conditions, all water reaching the storm sewer lift station is pumped to the line which leads to the Miami River (see Fig. 3). Because of the occasional discharge of storm water to Paddy's Run, samples are collected from the Miami River at Miamitown. It is unlikely that the intermittent flow of storm water would have any effect on river water quality since it contains no process waste discharges.

Daily samples from the final access point are analyzed for uranium, alpha and beta radioactivity, chloride, fluoride, nitrate, non-filterable solids, and pH. The same analyses are made on at least one sample per week from each of the river sampling points (W1, W3, and W4).

Monthly composites from each of the three river sampling points are analyzed for radium-226 and radium-228. For points W1 and W3, daily samples are composited into a monthly sample and for point W4 weekly samples are composited. Weekly composites of daily samples

from the waste-line final access point are analyzed for radium-226 and radium-228 and one-month composites are analyzed for thorium.

Soil and River Sediment. Once each year, soil samples are collected near the six boundary sampling stations. Each sample consists of six cores, 2 cm diameter and 10 cm deep. The cores are taken about 1.5 meters apart. These samples are analyzed for uranium to observe the possible contribution from stack effluents.

Sediment samples were collected from the banks of the Miami River and analyzed for uranium to determine if material was accumulating below the site outfall. Sediment from the river bank, near the water line, was collected by scraping up the top two inches. Only the portion passing a 50-mesh screen was analyzed.

MONITORING DATA

Environmental data collected during 1975 are given in Tables 1-6. Comparisons are made with the applicable standard for each contaminant. Confidence limits given in the tables are derived from analytical variations or from the statistical error inherent in radioactivity determinations.

Data in Table 1 show that average airborne uranium concentrations at the boundary sampling stations were no greater than 0.7% of the standard for offsite areas. It is concluded from these data that

any offsite radiation exposure resulting from FMPC airborne contaminants would be a small fraction of the standards given in reference 1.

The concentrations of particulate matter found at the boundary are given in Table 2. At all locations the average concentration of particulate matter did not exceed the OEPA limit for the annual arithmetic mean. The FMPC contribution to ambient air particulate matter cannot be assessed from these data. Except for BS3, all boundary stations are located near roads where traffic dust is generated. Also, BS4, BS5, and BS6 are located near agricultural lands, and periodic farming activities cause high dust levels.

Also shown in Table 2 are results for NO_2. All samples were collected at BS2 because the wind generally moves from the production area and power plant toward this location. The NO_2 results are below the state ambient air standard.

Table 3 contains information on radionuclides in water. As shown, the average concentration of uranium and thorium added to the river was less than 3×10^{-5}% of the ERDA Concentration Guides (CG) for uncontrolled areas. Combined radium-226 and -228 added to the river was 0.02% of the radium CG. By comparison, the combined average upstream concentrations of radium-226 and -228 was 3.0% of the CG.

TABLE 1 Radioactive Contaminants in Air

Contaminant	Sampling Point (1)	Number of Samples	Maximum Conc. Found		Minimum Conc. Found		Average Concentration				Detection Level	Standard
			$\mu g/m^3$	$\mu Ci/ml$	$\mu g/m^3$	$\mu Ci/ml$	$\mu g/m^3$	$\mu Ci/ml$	% of Standard	95% Confidence Level		
Uranium	BS1	51	0.118	3.92×10^{-14}	0.002	0.05×10^{-14}	0.037	1.24×10^{-14}	0.6	$\pm 0.14 \times 10^{-14}$ $\mu Ci/ml$	0.02×10^{-14} $\mu Ci/ml$	2×10^{-12} $\mu Ci/ml$ (2)
	BS2	51	0.125	4.18×10^{-14}	0.002	0.07×10^{-14}	0.033	1.09×10^{-14}	0.5			
	BS3	52	0.173	5.77×10^{-14}	0.003	0.09×10^{-14}	0.040	1.34×10^{-14}	0.7			
	BS4	52	0.064	2.12×10^{-14}	0.001	0.02×10^{-14}	0.011	0.37×10^{-14}	0.2			
	BS5	51	0.051	1.71×10^{-14}	0.001	0.04×10^{-14}	0.013	0.43×10^{-14}	0.2			
	BS6	52	0.108	3.60×10^{-14}	0.002	0.05×10^{-14}	0.026	0.87×10^{-14}	0.4			
Thorium	BS1	1(3)	NA(4)	NA	NA	NA	2.1×10^{-4}	0.24×10^{-16}	0.002	$\pm 0.1 \times 10^{-16}$ $\mu Ci/ml$	0.1×10^{-16} $\mu Ci/ml$	1×10^{-12} $\mu Ci/ml$ (5)
	BS2	1					3.3×10^{-4}	0.37×10^{-16}	0.004			
	BS3	1					1.4×10^{-4}	0.16×10^{-16}	0.002			
	BS4	1					1.6×10^{-4}	0.18×10^{-16}	0.002			
	BS5	1					2.9×10^{-4}	0.33×10^{-16}	0.003			
	BS6	1					1.8×10^{-4}	0.20×10^{-16}	0.002			
Gross Alpha Radioactivity	BS1	51	NA	5.43×10^{-14}	NA	0.06×10^{-14}	NA	1.28×10^{-14}	0.6	$\pm 0.14 \times 10^{-14}$ $\mu Ci/ml$	0.01×10^{-14} $\mu Ci/ml$	2×10^{-12} $\mu Ci/ml$ (2)
	BS2	51		5.47×10^{-14}		0.05×10^{-14}		1.21×10^{-14}	0.6			
	BS3	52		5.21×10^{-14}		0.20×10^{-14}		1.41×10^{-14}	0.7			
	BS4	52		1.85×10^{-14}		0.03×10^{-14}		0.40×10^{-14}	0.2			
	BS5	51		1.78×10^{-14}		0.04×10^{-14}		0.48×10^{-14}	0.2			
	BS6	52		3.01×10^{-14}		0.04×10^{-14}		0.90×10^{-14}	0.5			
Gross Beta Radioactivity	BS1	51	NA	9.20×10^{-14}	NA	2.06×10^{-14}	NA	4.10×10^{-14}	0.04	$\pm 0.6 \times 10^{-14}$ $\mu Ci/ml$	0.01×10^{-14} $\mu Ci/ml$	1×10^{-10} $\mu Ci/ml$ (6)
	BS2	51		9.17×10^{-14}		1.00×10^{-14}		4.14×10^{-14}	0.04			
	BS3	52		12.37×10^{-14}		1.50×10^{-14}		4.84×10^{-14}	0.05			
	BS4	52		9.87×10^{-14}		1.50×10^{-14}		3.74×19^{-14}	0.04			
	BS5	51		10.02×10^{-14}		1.18×10^{-14}		4.60×10^{-14}	0.05			
	BS6	52		9.19×10^{-14}		2.09×10^{-14}		4.58×10^{-14}	0.04			

Footnotes:

(1) See sampling locations shown in Figure 2.

(2) ERDA Manual Chapter 0524, Annex A, Table II, Concentration Guide for natural uranium.

(3) Each sample is a composite of 51 or 52 weekly samples.

(4) Not applicable.

(5) ERDA Manual Chapter 0524, Annex A, Table II, Concentration Guide for natural thorium.

(6) ERDA Manual Chapter 0524, Annex A, Table II, Concentration Guide for mixtures of unknown beta emitters.

TABLE 2 Non-Radioactive Contaminants in Air

Contaminant	Sampling Point (1)	Number of Samples	Concentration Range		Average Concentration			Detection Level	Standard (2)
			Maximum $\mu g/m^3$	Minimum $\mu g/m^3$	$\mu g/m^3$	% of Standard	95% Confidence Level		
Particulates	BS1	51	91	29	48	80	±5%	1 $\mu g/m^3$	60 $\mu g/m^3$
	BS2	51	91	23	55	91			
	BS3	52	90	30	52	86			
	BS4	52	98	30	53	88			
	BS5	51	107	21	60	100			
	BS6	52	88	29	51	85			
Nitrogen Dioxide	BS2	11	34	4	24	24	±15%	1$\mu g/m^3$	100 $\mu g/m^3$

Footnotes:

(1) See sampling locations shown in Figure 2.

(2) Ohio Ambient Air Quality Standards.

TABLE 3 Radioactive Contaminants in Water

Contaminant	Sampling Point (1)	Number of Samples	Maximum Conc. Found		Minimum Conc. Found		Average Concentration Found				Detection Level μCi/ml	Standard
			mg/l	μCi/ml	mg/l	μCi/ml	mg/l	μCi/ml	% of Standard	95% Confidence Limits		
Uranium	W1	53	0.016	0.53×10^{-8}	<0.001	$<0.33 \times 10^{-9}$	<0.004	$<0.13 \times 10^{-8}$	<0.006	$\pm 3.4 \times 10^{-10}$	3.3×10^{-10}	2×10^{-5} μCi/ml (3)
	W2	365	NA(2)	NA	NA	NA	1.65×10^{-4}	0.55×10^{-11}	2.8×10^{-5}	NA	NA	
	W3	53.	0.010	0.33×10^{-8}	0.001	0.33×10^{-9}	0.003	0.10×10^{-8}	0.005	$\pm 3.4 \times 10^{-10}$	3.3×10^{-10}	
	W4	8	0.019	0.64×10^{-8}	0.004	0.13×10^{-8}	0.008	0.27×10^{-8}	0.01	$\pm 3.4 \times 10^{-10}$	3.3×10^{-10}	
Thorium	W2	12	NA	NA	NA	NA	1.51×10^{-8}	0.17×10^{-12}	1.7×10^{-5}	NA	NA	1×10^{-8} μCi/ml (3)
Radium-226	W1	12	NA	4.54×10^{-10}	NA	$<4.54 \times 10^{-10}$	NA	$<4.54 \times 10^{-10}$	<1.5	$\pm 4.54 \times 10^{-10}$	4.54×10^{-10}	3×10^{-8} μCi/ml (3)
	W2	51	NA	NA	NA	NA	NA	3.16×10^{-12}	0.01	NA	NA	
	W3	12	NA	4.54×10^{-10}	NA	$<4.54 \times 10^{-10}$	NA	$<4.54 \times 10^{-10}$	<1.5	$\pm 4.54 \times 10^{-10}$	4.54×10^{-10}	
	W4	2	NA	4.54×10^{-10}	NA	4.54×10^{-10}	NA	4.54×10^{-10}	1.5	$\pm 4.54 \times 10^{-10}$	4.54×10^{-10}	
Radium-228	W1	12	NA	4.54×10^{-10}	NA	$<4.54 \times 10^{-10}$	NA	$<4.54 \times 10^{-10}$	<1.5	$\pm 4.54 \times 10^{-10}$	4.54×10^{-10}	3×10^{-8} μCi/ml (3)
	W2	51	NA	NA	NA	NA	NA	3.96×10^{-12}	0.01	NA	NA	
	W3	12	NA	3.63×10^{-9}	NA	$<4.54 \times 10^{-10}$	NA	$<1.36 \times 10^{-9}$	<4.5	$\pm 4.54 \times 10^{-10}$	4.54×10^{-10}	
	W4	2	NA	4.54×10^{-10}	NA	4.54×10^{-10}	NA	4.54×10^{-10}	1.5	$\pm 4.54 \times 10^{-10}$	4.54×10^{-10}	
Gross Alpha	W1	53.	NA	1.44×10^{-7}	NA	0.03×10^{-7}	NA	0.21×10^{-7}	700	$\pm 0.05 \times 10^{-7}$	1×10^{-9}	3×10^{-9} μCi/ml (4)
	W2	365	NA	NA	NA	NA	NA	0.10×10^{-9}	3.3	NA	NA	
	W3	53	NA	1.44×10^{-7}	NA	0.22×10^{-7}	NA	0.35×10^{-7}	1170	$\pm 0.05 \times 10^{-7}$	1×10^{-9}	
	W4	8	NA	1.26×10^{-7}	NA	$<1 \times 10^{-9}$	NA	$<0.29 \times 10^{-7}$	967	$\pm 0.05 \times 10^{-7}$	1×10^{-9}	
Gross Beta	W1	53	NA	1.26×10^{-7}	NA	0.09×10^{-7}	NA	0.23×10^{-7}	23	$\pm 5 \times 10^{-9}$	4×10^{-9}	1×10^{-7} μCi/ml (4)
	W2	365	NA	NA	NA	NA	NA	0.45×10^{-9}	0.45	NA	NA	
	W3	53	NA	0.91×10^{-7}	NA	0.09×10^{-7}	NA	0.32×10^{-7}	32	$\pm 5 \times 10^{-9}$	4×10^{-9}	
	W4	8	NA	0.72×10^{-7}	NA	0.45×10^{-8}	NA	0.18×10^{-7}	18	$\pm 5 \times 10^{-9}$	4×10^{-9}	

Footnotes:

(1) See sampling locations shown in Figure 2.

(2) Not applicable.

(3) ERDA Manual Chapter 0524, Annex A, Table II, Concentration Guides for natural uranium, natural thorium, radium-226 and radium-228.

(4) Ohio EPA Regulation EP-1, Water Quality Standards for gross alpha and gross beta radioactivity, Jan. 8, 1975.

The calculated addition of gross alpha and gross beta radioactivity averaged 3.3% and 0.45%, respectively, of the state criteria. However, gross alpha upstream and downstream in the river was above the state standard. No effort was made to identify this activity. A control program has been started to insure that high alpha results are not due to sampling, handling, or analytical problems. If these results are found to be valid, additional analyses will be made to identify the radionuclides present.

Operations at the FMPC did not cause any state standard for non-radioactive contaminants to be exceeded in the river. The contaminants listed in Table 4 were selected for analysis and reporting because of the possibility of adding to the river concentrations greater than 1% of the applicable state standards. Table 5 contains a summary of pH data.

There are no standards for comparison with the results for uranium in soil listed in Table 6. Although the normal concentration for uranium in local soil is 1-4 μg/g, there are no hazards associated with the increased concentrations caused by FMPC operations. External radiation from uranium is slight and the exposure contribution from these boundary concentrations would be considerably less than 1% of the Radiation Protection Standard for people in uncontrolled areas.

TABLE 4 Non-Radioactive Contaminants in Water

Contaminant	Sampling Point (1)	Number of Samples	Maximum Conc. Found mg/l	Minimum Conc. Found mg/l	Average Concentration mg/l	Average Concentration % of Standard	Average Concentration 95% Confidence Limits	Detection Limit	Standard
Fluoride	W1	53	1.10	<0.1	<0.41	<32	±15%	0.1 mg/l	1.3 mg/l (3)
	W2	365	NA(2)	NA	0.0005	0.04			
	W3	53	0.97	<0.1	<0.46	<35			
	W4	8	0.69	0.41	0.57	44			
Nitrate	W1	53	32	6	14	40	±10%	0.3 mg/l	35 mg/l (3)
	W2	365	NA	NA	1.1	3.1			
	W3	53	40	11	19	54			
	W4	8	31	12	18	51			

Footnotes:
(1) See sampling locations shown in Figure 4.
(2) Not applicable.
(3) Ohio EPA Regulation EP-1, Water Quality Standards, Jan. 8, 1975.

TABLE 5 Hydrogen Ion Concentration

Sampling Point (1)	No. of Samples	pH Range	Standard
W1	53	6.9 – 8.7	6.0 – 9.0 (2)
W2	365	7.0 – 10.2	NA(3)
W3	53	7.0 – 8.5	6.0 – 9.0 (2)
W4	8	7.8 – 8.1	6.0 – 9.0 (2)

Footnotes:
(1) See sampling locations shown in Figure 4.
(2) Ohio EPA Regulation EP-1, Water Quality Standards, Jan. 8, 1975.
(3) Not applicable.

TABLE 6 Uranium in Soil

Sampling Point (2)	Uranium Concentration (1)			Detection Level
	μg/g	μCi/g	95% Confidence Level	
BS1	26	8.7×10^{-6}	±25%	0.5 μg/g
BS2	26	8.7×10^{-6}		
BS3	117	39.1×10^{-6}		
BS4	12	4.0×10^{-6}		
BS5	20	6.7×10^{-6}		
BS6	22	7.3×10^{-6}		

Footnotes:

(1) Results on dry basis.

(2) See sampling locations shown in Figure 2.

TABLE 7 Uranium in Miami River Sediment

Distance from FMPC Outfall	Uranium Concentration (1)			Detection Level
	μg/g	μCi/g	95% Confidence Level	
Upstream				
3.7 miles	7.1	2.4×10^{-6}	±25%	0.5 μg/g
1.5 miles	3.6	1.2×10^{-6}		
Downstream				
50 feet	10	3.3×10^{-6}	±25%	0.5 μg/g
0.8 mile	2.8	0.9×10^{-6}		
3.3 miles	1.9	0.6×10^{-6}		
4.5 miles (2)	2.8	0.9×10^{-6}		
4.7 miles (3)	2.8	0.9×10^{-6}		

Footnotes:

(1) Results on dry basis.

(2) Upstream of mouth of Paddy's Run.

(3) Downstream of mouth of Paddy's Run.

The results of sediment sampling given in Table 7 do not indicate any build-up of uranium along the edge of the water where settling might be expected to occur. Most of the uranium present in the site effluent is soluble, probably existing as a carbonate complex, and remains soluble after mixing in the river. Furthermore, periodic flooding, which is severe enough to cause channel alteration and bank erosion, scours the river bed and banks and prevents any long-term sediment accumulation.

TOTAL RADIONUCLIDES RELEASED

During 1975, the amount of airborne uranium released through the plant stacks was 0.07 curies. The total uranium released in liquid effluent was 0.27 curies. Other liquid effluent release totals were: natural thorium, 0.0007 curies; radium-226, 0.013 curies; radium-228, 0.016 curies.

RADIATION EXPOSURE ESTIMATIONS FOR 1975

Based on the reasoning outlined below, it is concluded that radiation doses to the public from activities at the FMPC during 1975 did not exceed one percent of ERDA radiation protection standards.[1] Intakes of radionuclides from water, food, and air are considered as the only potential sources of exposure. As discussed below, exposure from FMPC radionuclides in water is not

likely. A hypothetical radiation dose from FMPC radionuclides in food is calculated and, even if likely to be received, is small enough to be considered insignificant.

Water. As shown in Table 3, radium was the radionuclide present at the greatest percentage of the limits specified in ERDM-0524. Radium-226 and radium-228, combined, from the FMPC amounted to 0.02% of the permissible intake limit for persons living at the plant boundary. Bone is the critical organ for radium and the radiation protection standard for bone is 1.5 rem/year. Therefore, if a resident used downstream water from the Miami River, the possible radiation dose to bone from the intake of FMPC radium would have been 3×10^{-4} rem. This is a negligible dose and, in addition, there is no known downstream use of the river as a potable water supply.

Food. It is possible for locally grown vegetables to contain trace amounts of uranium either from FMPC operations or from uranium which occurs naturally in the soil. The average concentration of uranium found in vegetables grown near the FMPC is 0.016 micrograms per gram wet weight. If we assume that a boundary resident consumes one pound of such vegetables per day, his uranium intake would be 7 micrograms per day. This amount of uranium is 0.005% of the intake permitted in drinking water. The gastrointestinal tract is the critical organ for ingested uranium and the radiation protection standard for the GI tract is 1.5 rem/year.

Therefore, the radiation dose to the GI tract from total ingested uranium (including background) would have been 7.5×10^{-5} rem.

Air. As shown in Table 1, the highest average concentration of uranium in air was found at Boundary Sampling Station No. 3. This average is 0.7% of the standard for insoluble uranium given in ERDM-0524. The critical organ is the lung and the related permissible radiation protection standard is 1.5 rems/year to a boundary resident. Therefore, the radiation dose to the lung from total inhaled uranium (including background) would have been 0.01 rem.

Maximum Radiation Dose At The Site Boundary. The maximum lung exposure at the site boundary from airborne uranium was calculated by two techniques. As noted in the previous section, a value of 0.01 rem or 0.7% of the standard was obtained from the Table 1 data. Using the total amount of airborne uranium released (0.07 curies), a diffusion equation calculation gave a value of 0.002 rem or 0.013% of the standard.

Starting in late 1975, measurements of external radiation at the site boundary were made using thermoluminescent dosimeters. However, the difference in results for two exposure periods precludes use of the data until additional experience is gained with this system.

Maximum Dose To An Individual. Airborne uranium is the only significant source of exposure from FMPC operations. As noted in a preceding section, the highest average uranium concentration was found at Boundary Station No. 3. The nearest residence to this location is about 1600 feet away. Assuming an occupancy factor of 80%, the radiation dose at this location due to airborne uranium was 8×10^{-3} rem or about 0.6% of the standard.

Maximum Dose To A Population Group. In addition to providing limits for boundary residents, ERDM-0524 also stipulates that the limits must be reduced by a factor of three when applied to a suitable sample of the exposed population. The community of Ross, Ohio is located about 2.5 miles from the center of the FMPC production area. If Ross residents qualify as a suitable sample of the exposed population, their airborne uranium exposure limit should be one-third of the limit used in Table 1 of this report, or 0.7×10^{-2} μCi/mℓ.

Boundary Station No. 2 is the nearest station to Ross. During 1975, the average airborne uranium concentration at this station was 1.34×10^{-14} μCi/mℓ. This is 1.9% of 0.7×10^{-2} μCi/mℓ. The actual concentration in Ross would have been much lower since the 2.5 miles between FMPC and Ross is about six times the distance from the production area center to the Boundary Sampling Station. Based on diffusion equation calculations, we

conservatively assume a reduction to one-third of the boundary concentration, or 0.6% of 0.7×10^{-12} μCi/mℓ.

The uranium limit of 0.7×10^{-12} μCi/mℓ for Ross residents is equivalent to a dose limit of 0.5 rem for a suitable sample of the exposed population. Therefore, the airborne uranium concentration assumed for Ross is equivalent to 0.6% of 0.5 rem, or 3×10^{-3} rem.

Additional exposure from possible food intake would be negligible compared with the possible exposure from airborne uranium. As noted earlier, the river is not used as a potable water supply. Therefore, there would be no additional exposure from water-borne radionuclides.

OTHER ENVIRONMENTAL CONTROLS

Sewage Plant Effluent. Effluent from the FMPC Sewage Treatment Plant is combined with other effluents at MH-175 (see Figure 3). Prior to discharge from the Sewage Treatment Plant, however, the effluent is carefully monitored and sampled to determine efficiency of operation and compliance with all applicable standards. The comparison in Table 8 shows that FMPC sewage treatment effluent far surpasses the requirements, in all parameters, of the federal EPA secondary treatment regulations (40 CFR 133.102).

TABLE 8 Sewage Treatment Plant Data

Parameter	EPA Standard			1975 FMPC Monthly Results
B.O.D. (five-day)	30 days (1)	(mg/l)	30	1 avg.
	7 days (1)	(mg/l)	45	4 max.
	Reduction (2)	(%)	≥ 85	99
Suspended Solids	30 days	(mg/l)	30	5 avg.
	7 days	(mg/l)	45	11 max.
	Reduction	(%)	≥ 85	93
Fecal Coliform	30 days	(per 100ml)	200	4 avg.
	7 days	(per 100ml)	400	60 max.
pH		(range)	6.0 – 9.0	7.1 – 8.6

Footnotes:

(1) Sampling period.

(2) Removal determined from analysis of Sewage Treatment Plant influent and effluent samples.

Steam Plant Emissions. The steam generation plant at FMPC consists of four boilers with a total design capacity of 300,000 lbs. of steam per hour. State of Ohio EPA Regulation EP-11-10 (AP-3-11), "Restriction on emission of particulate matter from fuel-burning equipment" establishes 0.13 pounds of particulates per million BTU input as the maximum limit on emissions of particulates from a steam generation plant with such capacity. Repeated stack sampling tests have shown that the range of particulate emissions from the steam generaion plant stacks is 0.25 - 0.40 lbs per million BTU input.

It has been estimated that only two boilers will be needed for projected future operations at the FMPC and the U. S. Congress has approved the installation of electrostatic precipitators on two units. It is anticipated that the installation will be completed by December 1, 1978, and the FMPC will be in compliance with the Ohio particulate emission limit as of December 30, 1978.

Sulfur dioxide emission limits for stationary facilities in Ohio such as the FMPC steam generation plant are in dispute between the regulatory agencies and therefore at this time it is impossible to state compliance status. However, low sulfur coal (1.56% sulfur) was burned during 1975.

Particulates From Industrial Processes. Maximum rates of emissions of particulates from industrial processes are prescribed

in State of Ohio EPA Regulation EP-11-11, "Restriction of emission of particulate matter from industrial processes." Through the use of many dust collectors, scrubbers, electrostatic precipitators, and other types of air cleaning equipment, particulate emissions from FMPC process operations are far below the established limits. No problems are anticipated in remaining in compliance with EP-11-11.

Incinerator Operations. The FMPC incinerator is used for the destruction of combustible trash, paper, wood, etc. It is equipped with a gas-fired afterburner to aid in attaining a goal of +1850°F temperature in the stack gases. The particulate emission limit prescribed by State of Ohio EPA Regulation EP-11-09, "Restriction on emissions from incinerators" is 0.10 pounds of particulate matter per 100 pounds of combustible refuse charged. Inaccessability of the stack and the high temperature of the stack gas combine to make sampling difficult and data as to compliance with EP-11-09 has not been obtained. However, during steady state operations with the 1850°F temperature developed, particulate emissions from the incinerator operation are minimized. Open burning is prohibited at FMPC in compliance with State of Ohio EPA Regulation AP3-08.

REFERENCES

(1) U. S. Energy Research & Development Administration, ERDA Manual Chapter 0524, Standards For Radiation Protection. April 8, 1975.

(2) Ohio Environmental Protection Agency, Ambient Air Quality Standards.

(3) Ohio Environmental Protection Agency, Regulation EP-1, Water Quality Standards, effective January 8, 1975.

FEED MATERIALS PRODUCTION CENTER
ENVIRONMENTAL MONITORING REPORT
FOR 1975

DISTRIBUTION LIST

Federal Activities Coordinator, EPA, Region V

Director, State of Ohio, Department of Health

Planning Director, Ohio River Basin Commission

Commissioner of Health, City of Cincinnati

Health Commissioner, County of Hamilton, Board of Health

Atomic Energy Coordinator, State of Ohio, Development Department

Director, State of Ohio Environmental Protection Agency

Southwest District Office, State of Ohio Environmental Protection Agency