43

G-000-106.34

FEED MATERIALS PRODUCTION CENTER ENVIRONMENTAL MONITORING ANNUAL REPORT FOR 1976

04/01/77

NLCO-1142
NLO/ERDA
37
REPORT

G-000-0043

PROPERTY C G-000-106.34

U.S. DEPT. OF ENERGY

REFERENCE MATERIAL

NLCO-1142
Special

DO NOT REMOVE

FEED MATERIALS PRODUCTION CENTER
ENVIRONMENTAL MONITORING ANNUAL REPORT
FOR 1976

By

M. W. Boback, K. N. Ross, and D. A. Fuchs

NATIONAL LEAD COMPANY OF OHIO
P. O. Box 39158
Cincinnati, Ohio 45239

Contract No. EY-76-C-05-1156

Date of Report: April 1, 1977

UNITED STATES ENERGY RESEARCH & DEVELOPMENT ADMINISTRATION
CINCINNATI AREA

Printed in the USA. Available from
National Technical Information Service, U. S. Department
of Commerce, 5285 Port Royal Road, Springfield, VA. 22161
Price: Printed copy $4.00; microfiche copy $3.00.

HS
Env '76

CONTENTS

Page

Summary 1

Introduction. 1

Area Features 4

Environmental Standards 6

Sample Collection and Analyses. 7

Monitoring Data 14

NPDES Permit. 24

Radiation Exposure Estimations For 1976 24

Other Environmental Controls. 29

References. 34

Distribution List 35

FIGURES

1 Area Map 2

2 Feed Materials Production Center Environmental Features. 8

3 Liquid Waste Streams. 10

4 FMPC And Surrounding Area. 12

TABLES

1 Radioactive Contaminants in Air. 15

2 Non-Radioactive Contaminants in Air. 16

3 Radioactive Contaminants in Water. 18

4 Radionuclides In Liquid Effluent 19

5 Non-Radioactive Contaminants in Water. 19

6 Hydrogen Ion Concentration 21

7 Uranium In Soil. 21

CONTENTS (Cont'd.)

Page

8 Uranium In Soil vs. Depth. 23

9 Uranium In Miami River Sediment. 23

10 1976 NPDES Summary 25

11 Radiation Dose Rates At Site Boundary. 25

12 Sewage Treatment Plant Data. 30

SUMMARY

This report contains environmental monitoring data collected at the Feed Materials Production Center during 1976. These data show that the average boundary concentrations of airborne radioactive contaminants from FMPC operations were no greater than 0.5% of the guide levels published in ERDA Manual Chapter 0524.[1] The resulting offsite radiation exposures would, therefore, be a small fraction of the standards for uncontrolled areas. Radionuclides in wastewater did not present a significant potential for radiation exposure.

Concentrations of environmentally important non-radioactive contaminants in water and air are also reported. Results show that FMPC operations did not cause State standards for these contaminants to be exceeded.

INTRODUCTION

The Feed Materials Production Center (FMPC) is an industrial facility owned by the United States Energy Research & Development Administration and operated by the National Lead Company of Ohio. It is located on a 1050-acre site about 20 miles northwest of Cincinnati, Ohio. Several rural communities are 1-3 miles away. See Figure 1 for a map of the area.

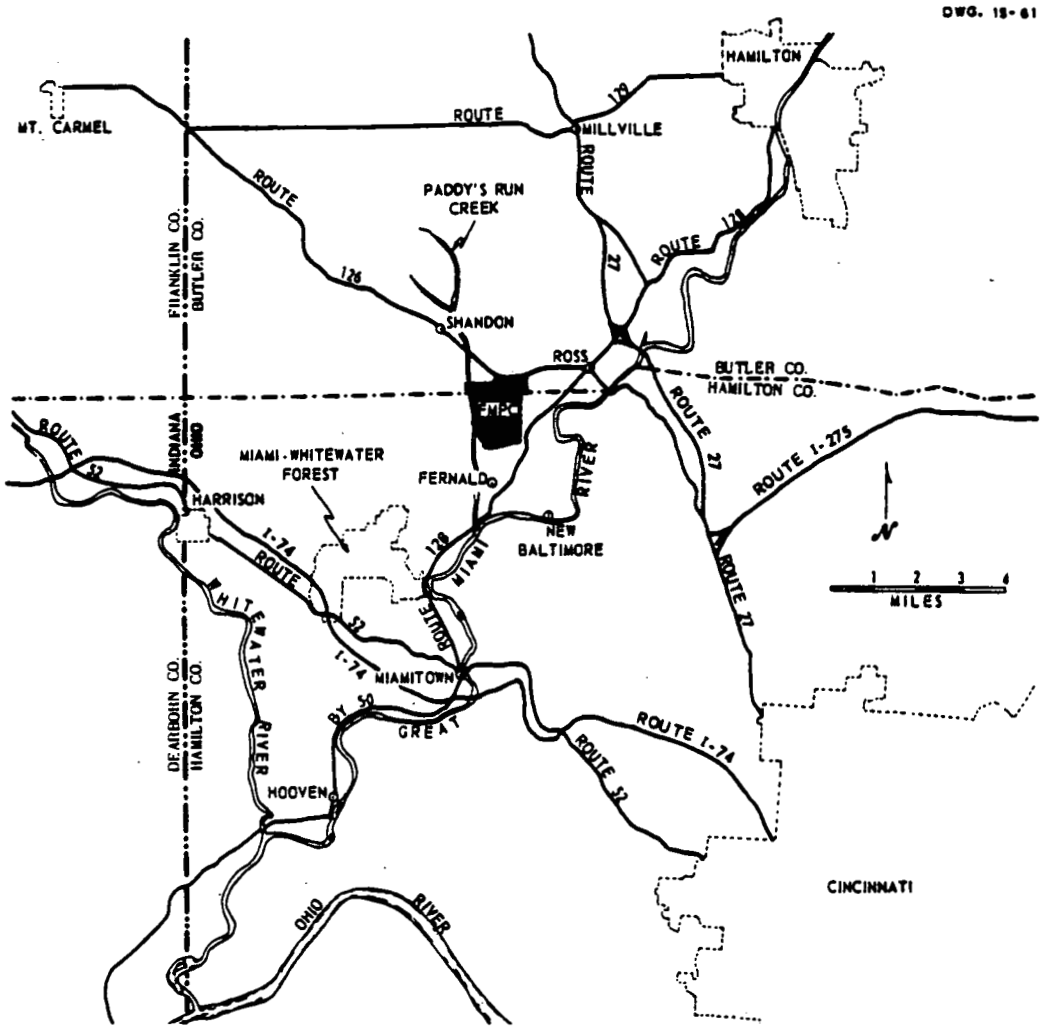

FIGURE 1 Area Map

The primary work at the FMPC is the production of purified uranium metal and compounds for use at other ERDA sites. In regard to uranium-235 content, the uranium may be depleted, normal, or slightly enriched. The average content is close to normal.

Uranium production may begin with ore concentrates, recycled uranium from spent reactor fuel, or with various compounds from other ERDA sites. Impure starting material is dissolved in nitric acid and the uranium is extracted into an organic liquid and then back-extracted into dilute nitric acid to yield a solution of uranyl nitrate.

Evaporation and heating convert the nitrate solution to uranium trioxide (UO_3) powder. This compound is reduced to uranium dioxide (UO_2) with hydrogen and then converted to uranium tetrafluoride (UF_4) by reaction with anhydrous hydrogen fluoride. Uranium metal is produced by reacting UF_4 and magnesium metal in a refractory-lined reduction vessel. This primary uranium metal is then remelted with scrap uranium metal to yield a purified uranium ingot which is extruded to form rods or tubes. Sections are then cut and machined to final dimensions. These machined cores are shipped to other ERDA sites for canning and final assembly into reactor fuel elements.

Periodically, small amounts of thorium are processed. Thorium production steps, in general, are similar to those followed in uranium production. Final products may be purified thorium nitrate solution, solid thorium compounds, or metal.

AREA FEATURES

Glacial action during the time of the Illinoian and Wisconsinan ice sheets gave the area its basic geological features. In the FMPC area, outwash from retreating glaciers filled in the wide valley of a large ancient river. Through this fill, the Miami River has cut its present course and the river bed is now located about 60 feet below the original surface level of the glacial deposits. Underlying the FMPC is about 50 feet of a clay-rich till which may be a remnant of a large glacial moraine. Beneath the till is about 150 feet of sand and gravel which fills the buried valley of the pre-glacier river. In the FMPC area, that ancient valley is about three miles wide.

The area east of the FMPC, in the Miami River flood plain, has fertile soil and is reported to contain some of the best farm land in the State. In the gently rolling uplands west of the flood plain, the thin soil mantle over the glacial drift is less fertile.

Although there are several small industries nearby, the major economic activities in this rural area are farming, dairying,

and the raising of beef cattle. Farm crops include sweet corn, field corn, soybeans and wheat. Truck crops are widely grown and sold at local produce stands and in nearby urban markets.

The glacial fill and the Miami River have provided two other important area products--ground water and gravel. A company located about one mile from the FMPC pumps out about 20 million gallons of ground water per day, chiefly for industries in and near Cincinnati. Pumping began just before the FMPC was built. The permeable glacial deposits, called valley-train, house the bountiful deep aquifer from which the water company and the FMPC draw supplies. The Miami River continuously provides part of the aquifer recharge.

Gravel pit operations are a familiar sight in the Miami Valley. Some operations are located along the river, with a sand dike separating gravel washwater from the river. Other operations are within the flood plain, but are several hundred feet from the river.

Upstream from the FMPC, the river receives substantial amounts of industrial and municipal wastes. The cities of Dayton, Middletown, Hamilton, and Fairfield are major contributors. Little recreational use is made of the river. Downstream from the FMPC, the population is sparse and industries are small and scattered. About 18 miles away, the Miami meets the Ohio River.

In 1976, the total precipitation measured at the FMPC was 30 inches. Monthly maximum and minimum values were 5.6 inches during August and 0.4 inch during December.

ENVIRONMENTAL STANDARDS

There are several sets of standards which can be applied to environmental samples collected in connection with FMPC operations. These standards have been set by ERDA and the State of Ohio Environmental Protection Agency (OEPA).

ERDA standards for radiation protection must be met by contract operators such as the National Lead Company of Ohio.[1] Concentration Guides for radionuclides are established separately for air and water in work areas and in areas outside of ERDA control.

For environmental monitoring purposes, ERDA criteria for air and water in uncontrolled areas are used as standards. At the FMPC, criteria for offsite or ambient air are applied to samples collected at the plant boundary. Criteria for offsite water are applied to river samples collected downstream from the point where the plant effluent reaches the river, but upstream from any known use of the water as a drinking water supply.

Criteria used for non-radioactive contaminants in ambient air are those established by the Ohio EPA.[2] Water quality

criteria adopted by the Ohio EPA are mainly concerned with non-radioactive contaminants, but several radioactivity limits are included.[3] State water quality standards apply to the river, beyond a mixing zone permitted for industrial and municipal effluents.

SAMPLE COLLECTION AND ANALYSIS

Air. Conversion of impure uranium and thorium compounds to reactor-grade feed materials involves operations which generate radioactive dust, nuisance dusts, and corrosive mists or reaction products. Ventilation and air cleaning systems are used to confine this air and remove airborne contaminants, including valuable material which is returned to the production processes. The filtered or scrubbed air is exhausted to the atmosphere. Sampling of these stack exhausts is maintained on a continuous schedule to determine the operating condition of the air cleaning systems.

Samples of particulate matter in air are continuously collected at six permanent sampling stations located on the project's outer boundary (see Figure 2). At each boundary station, air is drawn at a rate of about one cubic meter per minute through an 8 inch x 10 inch filter which is changed weekly. Filters are weighed before use and then reweighed after changing to obtain the weight of collected dust. After reweighing, the filter and

FIGURE 2
FEED MATERIALS PRODUCTION CENTER
ENVIRONMENTAL FEATURES

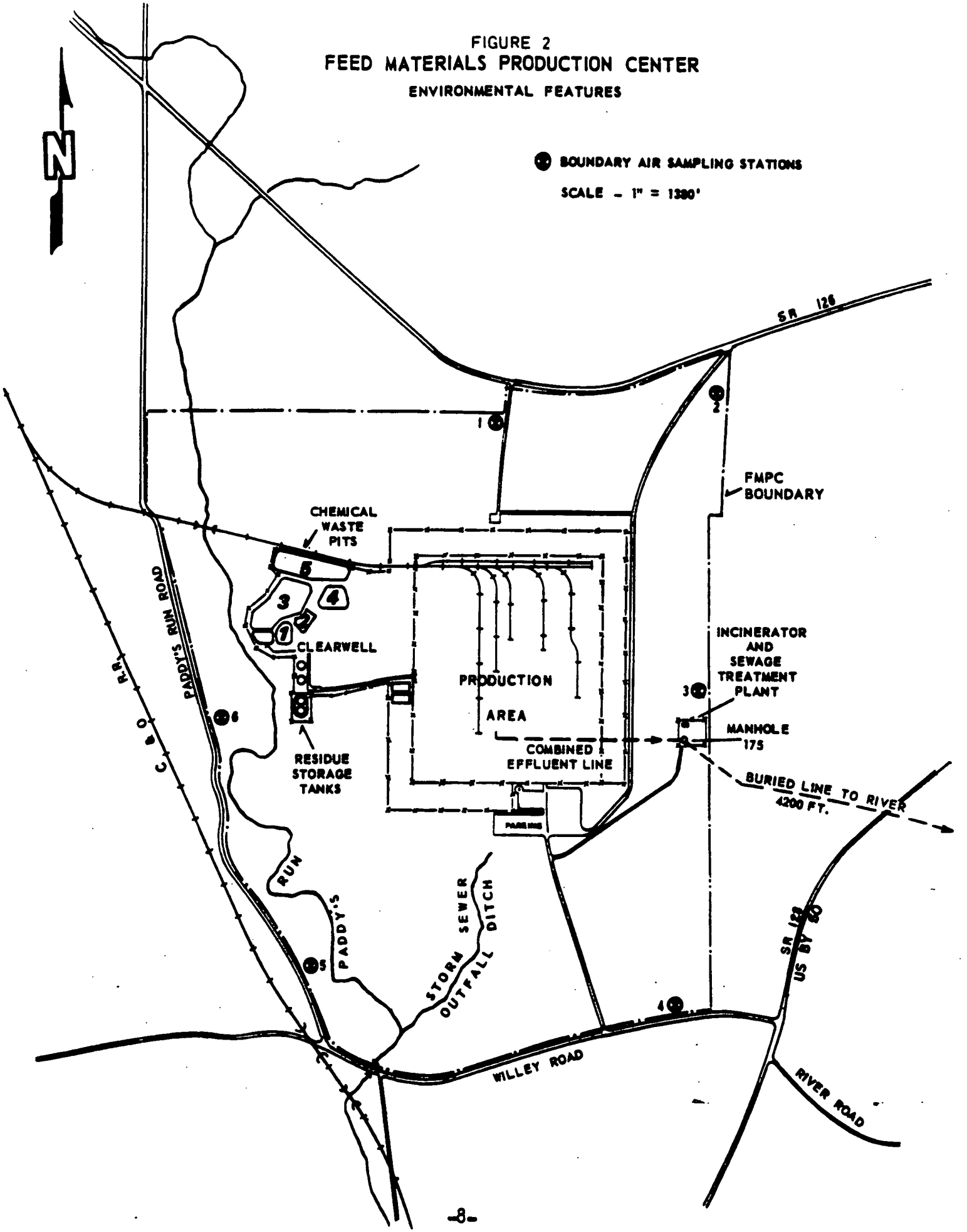

its collection of dust are dissolved in acid and the solutions are analyzed for uranium and alpha and beta radioactivity. Counting is done about seven days after the end of the collection period. After these analyses are completed the remaining solution is held to provide a long-term composite for thorium analyses. Frequent thorium analyses are not considered necessary because of the small amount of thorium processed and the low concentration of thorium found in the boundary samples. Because of the low concentrations, analysis of annual composites for each station is considered adequate.

Periodically during the year, air samples were collected at boundary station no. 2 for the determination of nitrogen dioxide. The NO_2 samples were collected for 24-hour periods.

Water. Each of the individual production plants on the project has sumps and equipment for the collection and initial treatment of process waste water. Uranium and thorium may be recovered as part of the treatment. Effluents from the plants are collected at a central facility, called the General Sump, for additional treatment. The treated wastes are filtered or are discharged into a large pit where the solids settle to the bottom. Both the filtrate and clear effluent from the pit are combined with the other water streams and discharged to the Great Miami River. See Figure 3 for a diagram of the process.

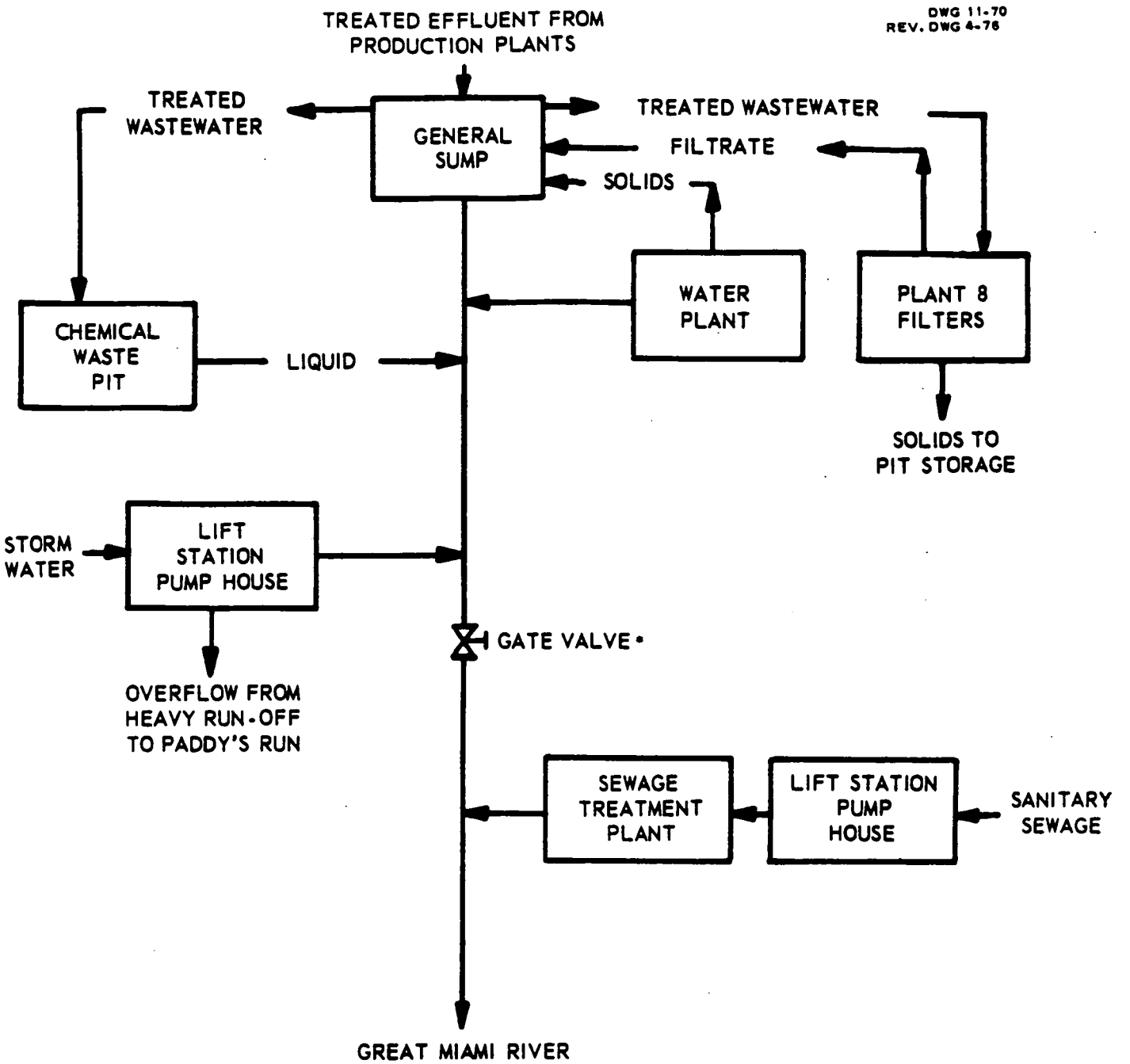

**Storm sewer water can be diverted to the Chemical Waste Pit or the General Sump by first halting the pumping from both locations and then closing the gate valve.*

FIGURE 3 Liquid Waste Streams

Water sampling locations are shown in Figure 4. At the final access point on the plant effluent line, W2, a Parshal Flume type water sampler continuously collects a sample which is proportional to the total flow. Twenty-four-hour samples from this point are collected daily for analyses. Each sample is analyzed for uranium, alpha and beta radioactivity, chloride, fluoride, nitrate, non-filterable solids and pH. One- and two-week composites of the daily samples are analyzed for radium-226 and radium-228 and one-month composites are analyzed for thorium. Long-term composites are analyzed for other radionuclides of interest.

In Figure 4, the river sampling points are identified as W1, W3, and W4. At W1, upstream from the effluent discharge, a daily grab sample is collected. At point W3, downstream on the river from the effluent discharge, 24-hour samples are collected by a continuous sampler. Point W4 is at Miamitown, 4.7 miles downstream from the mouth of Paddy's Run. Grab samples are collected weekly at this point. Paddy's Run is a small stream which flows along the site's west edge and joins the Miami River about two miles away from the FMPC southern boundary. During periods of heavy run-off, excess water in the storm sewer system overflows to a drainage ditch which discharges into Paddy's Run. Under normal conditions, all water reaching the storm sewer lift station is pumped to the line which leads to the Miami River

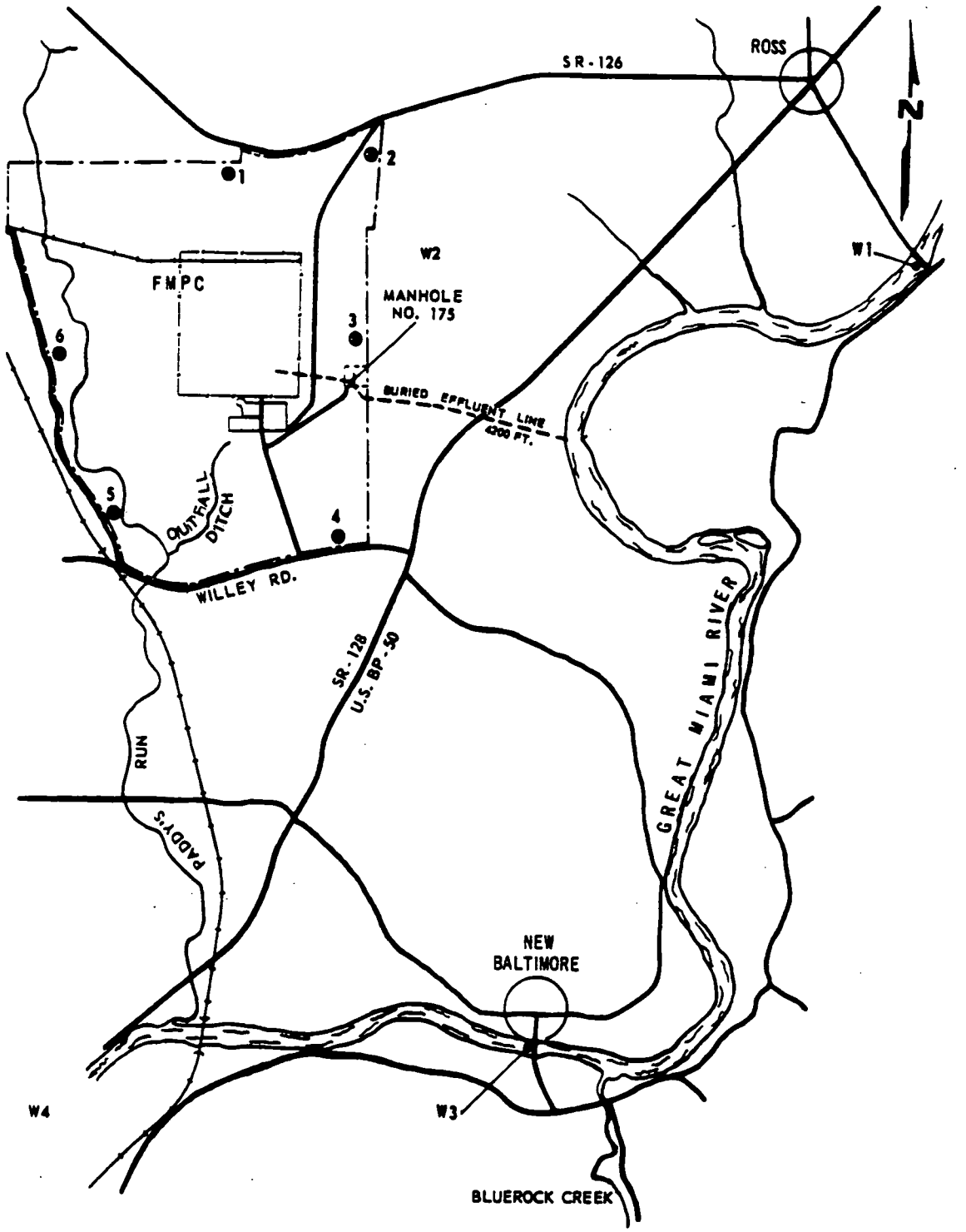

W4 is located at Miamitown,
4.7 miles from Paddy's Run.

FIGURE 4 FMPC and Surrounding Area

● BOUNDARY AIR SAMPLING STATIONS.

W1, W2, W3 & W4 - WATER SAMPLING LOCATIONS

SCALE: 1" = 3055'

(see Figure 3). Because of the occasional discharge of storm water to Paddy's Run, samples are collected from the Miami River at Miamitown. It is unlikely that the intermittent flow of storm water would have any effect on river water quality since it contains no process waste discharges.

At least one sample per week from each of the three river sampling points is analyzed for uranium, alpha and beta radioactivity, chloride, fluoride, nitrate, non-filterable solids, and pH. Monthly composites from each location are analyzed for radium-226 and radium-228.

Soil and River Sediment. Once each year, soil samples are collected near the six boundary sampling stations. Each sample consists of six cores, 2 cm diameter and 10 cm deep. The cores are taken about 1.5 meters apart. These samples are analyzed for uranium to observe the possible contribution from stack effluents.

Sediment samples were collected from the banks of the Miami River and analyzed for uranium to determine if material was accumulating below the site outfall. Sediment from the river bank, near the water line, was collected by scraping up the top two inches. Only the portion passing a 50-mesh screen was analyzed.

MONITORING DATA

Environmental data collected during 1976 are given in the accompanying tables. Comparisons are made with the applicable standard for each significant contaminant. Confidence limits given in the tables are derived from analytical variations or from the statistical error inherent in radioactivity determinations.

Data in Table 1 show that average airborne uranium concentrations at the boundary sampling stations were no greater than 0.5% of the standard for offsite areas. It is concluded from these data that any offsite radiation exposure resulting from FMPC airborne contaminants would be a small fraction of the standards given in reference 1.

According to stack monitoring data, the total amount of uranium released to the atmosphere during 1976 was 0.03 Curies.

The concentrations of particulate matter found at the boundary are given in Table 2. At all locations the average concentration of particulate matter did not exceed the OEPA limit for the annual arithmetic mean. The FMPC contribution to ambient air particulate matter cannot be assessed from these data. Except for BS3, all boundary stations are located near roads where traffic dust is generated. Also, BS4, BS5, and BS6 are located near agricultural lands, and periodic farming activities cause high dust levels.

TABLE 1 Radioactive Contaminants In Air

Contaminant	Sampling Point (1)	Number of Samples	Maximum Conc. Found		Minimum Conc. Found		Average Concentration				Detection Level	Standard
			$\mu g/m^3$	$\mu Ci/ml$	$\mu g/m^3$	$\mu Ci/ml$	$\mu g/m^3$	$\mu Ci/ml$	% of Standard	95% Confidence Level		
Uranium	BS1	52	0.212	7.08×10^{-14}	0.002	0.08×10^{-14}	0.028	0.93×10^{-14}	0.5	$\pm 0.14 \times 10^{-14}$ $\mu Ci/ml$	0.02×10^{-14} $\mu Ci/ml$	2×10^{-12} $\mu Ci/ml$ (2)
	BS2	52	0.077	2.56×10^{-14}	0.002	0.06×10^{-14}	0.019	0.62×10^{-14}	0.3			
	BS3	52	0.064	2.14×10^{-14}	0.005	0.18×10^{-14}	0.029	0.97×10^{-14}	0.5			
	BS4	51	0.045	1.50×10^{-14}	0.002	0.06×10^{-14}	0.009	0.30×10^{-14}	0.2			
	BS5	51	0.034	1.12×10^{-14}	0.001	0.03×10^{-14}	0.009	0.30×10^{-14}	0.2			
	BS6	51	0.076	2.53×10^{-14}	0.001	0.04×10^{-14}	0.015	0.49×10^{-14}	0.2			
Thorium	BS1	1 (3)	NA (4)	NA	NA	NA	2.6×10^{-4}	0.29×10^{-16}	0.003	$\pm 0.1 \times 10^{-16}$ $\mu Ci/ml$	0.1×10^{-16} $\mu Ci/ml$	1×10^{-12} $\mu Ci/ml$ (5)
	BS2	1					3.3×10^{-4}	0.37×10^{-16}	0.004			
	BS3	1					2.2×10^{-4}	0.25×10^{-16}	0.002			
	BS4	1					2.2×10^{-4}	0.25×10^{-16}	0.002			
	BS5	1					2.0×10^{-4}	0.23×10^{-16}	0.002			
	BS6	1					2.3×10^{-4}	0.26×10^{-16}	0.003			
Gross Alpha Radioactivity	BS1	52	NA	7.39×10^{-14}	NA	0.08×10^{-14}	NA	0.99×10^{-14}	0.5	$\pm 0.14 \times 10^{-14}$ $\mu Ci/ml$	0.01×10^{-14} $\mu Ci/ml$	2×10^{-12} $\mu Ci/ml$ (2)
	BS2	52		2.26×10^{-14}		0.04×10^{-14}		0.69×10^{-14}	0.3			
	BS3	52		3.32×10^{-14}		0.22×10^{-14}		0.96×10^{-14}	0.5			
	BS4	51		1.49×10^{-14}		0.05×10^{-14}		0.37×10^{-14}	0.2			
	BS5	51		1.36×10^{-14}		0.05×10^{-14}		0.38×10^{-14}	0.2			
	BS6	51		2.26×10^{-14}		0.10×10^{-14}		0.52×10^{-14}	0.3			
Gross Beta Radioactivity	BS1	52	NA	10.1×10^{-14}	NA	0.97×10^{-14}	NA	3.10×10^{-14}	0.03	$\pm 0.6 \times 10^{-14}$ $\mu Ci/ml$	0.01×10^{-14} $\mu Ci/ml$	1×10^{-10} $\mu Ci/ml$ (6)
	BS2	52		20.4×10^{-14}		0.48×10^{-14}		2.94×10^{-14}	0.03			
	BS3	52		26.1×10^{-14}		0.99×10^{-14}		3.70×10^{-14}	0.04			
	BS4	51		29.2×10^{-14}		0.68×10^{-14}		3.07×10^{-14}	0.03			
	BS5	51		26.4×10^{-14}		0.92×10^{-14}		3.45×10^{-14}	0.03			
	BS6	51		29.3×10^{-14}		1.13×10^{-14}		4.00×10^{-14}	0.04			

Footnotes:

(1) See sampling locations shown in Figure 2.

(2) ERDA Manual Chapter 0524, Annex A, Table II, Concentration Guide for natural uranium.

(3) Each sample is a composite of 51 or 52 weekly samples.

(4) Not applicable.

(5) ERDA Manual Chapter 0524, Annex A, Table II, Concentration Guide for natural thorium.

(6) ERDA Manual Chapter 0524, Annex A, Table II, Concentration Guide for mixtures of unknown beta emitters.

TABLE 2 Non-Radioactive Contaminants in Air

Contaminant	Sampling Point (1)	Number of Samples	Concentration Range		Average Concentration			Detection Level	Standard (2)
			Maximum $\mu g/m^3$	Minimum $\mu g/m^3$	$\mu g/m^3$	% of Standard	95% Confidence Level		
Particulates	BS1	52	85	29	48	80	±5%	1 $\mu g/m^3$	60 $\mu g/m^3$
	BS2	52	88	31	49	82			
	BS3	52	94	29	48	80			
	BS4	51	125	34	59	98			
	BS5	52	108	33	51	85			
	BS6	51	104	22	53	88			
Nitrogen Dioxide	BS2	9	95	25	44	44	±15%	1 $\mu g/m^3$	100 $\mu g/m^3$

Footnotes:

(1) See sampling locations shown in Figure 2.

(2) Ohio Ambient Air Quality Standards.

Also shown in Table 2 are results for NO_2. All samples were collected at BS2 because the wind generally moves from the production area and power plant toward this location. The NO_2 results are below the State ambient air standard.

Table 3 contains information on uranium, radium-226, radium-228, and alpha and beta radioactivity in the Miami River. There is no significant difference between the upstream and downstream concentrations of radium and uranium. All concentrations are well within the ERDA limit for water in uncontrolled areas. Average concentrations of alpha radioactivity were above the State standard, both upstream and downstream from the FMPC discharge point.

Information given in Table 4 shows the total quantity of ten radionuclides discharged during 1976 and the average concentrations in the plant effluent as measured at the final onsite access point, W2. The average concentrations are all below the limits given in ERDAM-0524 for water in uncontrolled areas. Analysis of the plant effluent provides basic information for assessing the adequacy of waste treatment efforts and the control of contaminant releases. It is much easier to get continuous representative samples of the effluent than of the river and radionuclides can generally be determined with greater reliability in effluent samples than by analysis of river samples after the radionuclides have undergone a large dilution.

TABLE 3 Radioactive Contaminants in Water

Contaminant	Sampling Point (1)	Number of Samples	Maximum Conc. Found		Minimum Conc. Found		Average Concentration Found				Detection Level μ Ci/ml	Standard
			mg/l	μ Ci/ml	mg/l	μ Ci/ml	mg/l	μ Ci/ml	% of Standard	95% Confidence Limit (5)		
Uranium	W1	52	0.013	0.43×10^{-8}	0.001	0.33×10^{-9}	0.005	0.17×10^{-8}	0.008			2×10^{-5}
	W3	52	0.014	0.47×10^{-8}	0.001	0.33×10^{-9}	0.004	0.13×10^{-8}	0.006	$\pm 3.4 \times 10^{-10}$	3.3×10^{-10}	μ Ci/ml
	W4	52	0.024	0.80×10^{-8}	0.001	0.33×10^{-9}	0.008	0.27×10^{-8}	0.014			(3)
Radium-226	W1	52		4.54×10^{-10}		$< 4.54 \times 10^{-10}$		$< 4.54 \times 10^{-10}$	< 1.5			3×10^{-8}
	W3	52	NA(2)	4.54×10^{-10}	NA	$< 4.54 \times 10^{-10}$	NA	$< 4.54 \times 10^{-10}$	< 1.5	$\pm 4.54 \times 10^{-10}$	4.54×10^{-10}	μ Ci/ml
	W4	52		4.54×10^{-10}		$< 4.54 \times 10^{-10}$		$< 4.54 \times 10^{-10}$	< 1.5			(3)
Radium-228	W1	52		9.08×10^{-10}		$< 4.54 \times 10^{-10}$		$< 4.99 \times 10^{-10}$	< 1.7			3×10^{-8}
	W3	52	NA	9.08×10^{-10}	NA	$< 4.54 \times 10^{-10}$	NA	$< 4.99 \times 10^{-10}$	< 1.7	$\pm 4.54 \times 10^{-10}$	4.54×10^{-10}	μ Ci/ml
	W4	52		9.08×10^{-10}		$< 4.54 \times 10^{-10}$		$< 5.69 \times 10^{-10}$	< 1.9			
Gross Alpha	W1	52		0.31×10^{-7}		0.04×10^{-8}	< DL	0.77×10^{-8}	257			3×10^{-8}
	W3	52	NA	0.14×10^{-7}	NA	0.04×10^{-8}	NA	0.54×10^{-8}	180	$\pm 0.05 \times 10^{-7}$	1×10^{-8}	μ Ci/ml
	W4	52		0.29×10^{-7}		$< 0.09 \times 10^{-8}$		$< 0.82 \times 10^{-8}$	< 273	0.09×10^{-8}	0.09×10^{-8}	(4)
Gross Beta	W1	52		1.00×10^{-7}		0.45×10^{-8}		0.18×10^{-7}	18			1×10^{-7}
	W3	52	NA	0.45×10^{-7}	NA	0.45×10^{-8}	NA	0.18×10^{-7}	18	$\pm 5 \times 10^{-8}$	4×10^{-8}	μ Ci/ml
	W4	52		3.86×10^{-7}		0.45×10^{-8}		0.36×10^{-7}	36	0.03×10^{-7}	0.02×10^{-7}	(4)

Footnotes:

(1) See sampling locations shown in Figure 2.

(2) Not applicable.

(3) ERDA Manual Chapter 0524, Annex A, Table II, Concentration Guides for natural uranium, natural thorium, radium-226 and radium-228.

(4) Ohio EPA Regulation EP-1, Water Quality Standards for gross alpha and gross beta radioactivity, Jan. 8, 1975.

(5) Confidence limit applies to the average concentration.

TABLE 4 Radionuclides in Liquid Effluent (1)

Radionuclide	Total Curies	Average Conc. Found		Standard (2)
		μ Ci/ml	% of Standards	μ Ci/ml
Cesium - 137	2×10^{-2}	4.0×10^{-8}	0.2	2×10^{-5}
Neptunium - 237	2×10^{-7}	2.6×10^{-10}	0.009	3×10^{-6}
Plutonium - 238	4×10^{-7}	5.9×10^{-10}	0.01	5×10^{-6}
Plutonium - 239	2×10^{-7}	2.2×10^{-10}	0.004	5×10^{-6}
Radium - 226	7×10^{-3}	1.0×10^{-8}	33	3×10^{-8}
Radium - 228	8×10^{-3}	1.2×10^{-8}	40	3×10^{-8}
Ruthenium - 106	3×10^{-3}	4.7×10^{-9}	0.05	1×10^{-5}
Technetium - 99	9	1.3×10^{-5}	4	3×10^{-4}
Thorium	6×10^{-4}	8.6×10^{-10}	0.09	1×10^{-6}
Uranium	2.4×10^{-1}	3.5×10^{-7}	1.8	2×10^{-5}

Footnotes:

(1) Radionuclides discharged directly to the Great Miami River through a buried pipeline. An additional 0.3×10^{-1} curies of uranium was discharged in the precipitation run-off which flowed to Paddy's Run via the storm sewer outfall drainage ditch.

(2) ERDA Manual Chapter 0524, Annex A, Table II, Concentration Guides for water in uncontrolled areas. These Guides are for water such as the Great Miami River and are not meant to be applied to the plant effluent. They are listed here for comparison purposes, only.

TABLE 5 Non-Radioactive Contaminants in Water

Contaminant	Sampling Point (1)	Number of Samples	Maximum Conc. Found mg/l	Minimum Conc. Found mg/l	Average Concentration			Detection Limit	Standard
					mg/l	% of Standard	95% Confidence Limits		
Fluoride	W1	52	1.1	0.1	0.5	38	±15%	0.1 mg/l	1.3 mg/l (2)
	W3	52	1.2	0.2	0.6	46			
	W4	52	1.2	0.2	0.5	38			
Nitrate	W1	52	39	6	13	37	±10%	0.3 mg/l	35 mg/l (2)
	W3	52	49	11	19	54			
	W4	52	43	9	17	48			

Footnotes:

(1) See sampling locations shown in Figure 4.

(2) Ohio EPA Regulation EP-1, Water Quality Standards, Jan. 8, 1975.

During 1976, the average flow of plant effluent was 0.5 million gallons per day. The average river flow was 1523 million gallons per day, which means that on an average basis, each gallon of FMPC effluent was mixed with 3046 gallons of river water. At this mixing ratio, radium-226 and radium-228 from the FMPC would have amounted to only 0.01% each, of the ERDAM-0524 limit for water in uncontrolled areas. The percentages shown for the other nuclides in Table 4 would have been similarly reduced.

Operations at the FMPC did not cause any State standard for non-radioactive contaminants to be exceeded in the river. The contaminants listed in Table 5 were selected for analysis and reporting because of the possibility of adding to the river concentrations greater than 1% of the applicable State standards. Table 6 is a summary of pH data.

There are no standards for comparison with the results for uranium in soil listed in Table 7. Although normal concentration for uranium in local soil is 1-4 μg/g, there are no hazards associated with the increased concentrations caused by FMPC operations. External radiation from uranium is slight and the exposure contribution from these boundary concentrations would be considerably less than 1% of the Radiation Protection Standard for people in uncontrolled areas.

TABLE 6 Hydrogen Ion Concentration

Sampling Point (1)	No. of Samples	pH Range	Standard (2)
W1	52	7.5 - 8.5	
W3	52	7.3 - 8.4	6.0 - 9.0
W4	52	7.1 - 8.9	

Footnotes:
(1) See sampling locations shown in Figure 4.
(2) Ohio EPA regulation EP - 1, Water Quality Standards, Jan. 8, 1975.

TABLE 7 Uranium In Soil

Sampling Point (2)	Uranium Concentration (1)			Detection Level
	μg/g	μCi/g	95% Confidence Level	
BS1	18	6.0×10^{-6}		
BS2	22	7.4×10^{-6}		
BS3	117	39.1×10^{-6}	±25%	0.5 μg/g
BS4	9.4	3.1×10^{-6}		
BS5	15	5.0×10^{-6}		
BS6	17	5.7×10^{-6}		

Footnotes:
(1) Results on dry basis.
(2) See sampling locations shown in Figure 2.

Uranium deposited on the ground will be slowly solubilized and transported as surface water percolates through the soil. The rate of movement will depend on a number of factors, including the amount of annual precipitation, uranium compounds involved, soil carbonate content, and amount of organic material in the upper soil horizon. The degree of movement in an undisturbed location near boundary sampling station no. 3 is shown by the data in Table 8. Minor surface deposition of uranium began about 25 years ago with peak deposition occurring about 15-20 years ago. Considering this uncertainty in surface deposition rate, it appears that the vertical movement of uranium through the soil at this location has been at about 0.5 inch per year.

The results of sediment sampling given in Table 9 do not indicate any build-up of uranium along the edge of the water where settling might be expected to occur. Most of the uranium present in the site effluent is soluble, probably existing as a carbonate complex, and remains soluble after mixing in the river. Furthermore, periodic flooding, which is severe enough to cause channel alteration and bank erosion, scours the river bed and banks and prevents any long-term sediment accumulation.

TABLE 8 Uranium Concentration In Soil vs Depth

Soil Depth, Inches	Uranium, μg/g (1)
0-2	125
3-4	62
5-6	20
7-8	10
9-10	5.2
11-12	3.5

Footnotes:
(1) Results on dry basis.

TABLE 9 Uranium In Miami River Sediment

Distance from FMPC Outfall	Uranium Concentration (1)			Detection Level
	μg/g	μCi/g	95% Confidence Level	
Upstream				
3.7 miles	1.8	0.6×10^{-6}	±25%	0.5 μg/g
1.5 miles	2.4	0.8×10^{-6}		
Downstream				
50 feet	4.8	1.6×10^{-6}	±25%	0.5 μg/g
0.8 mile	1.6	0.5×10^{-6}		
3.3 miles	1.3	0.4×10^{-6}		
4.5 miles (2)	1.3	0.4×10^{-6}		
4.7 miles (3)	2.0	0.7×10^{-6}		

Footnotes:
(1) Results on dry basis.
(2) Upstream of mouth of Paddy's Run.
(3) Downstream of mouth of Paddy's Run.

NPDES PERMIT

A permit to discharge liquid effluent has been issued to the FMPC by the U. S. Environmental Protection Agency. The permit was issued under the National Pollutant Discharge Elimination System (NPDES) and it contains maximum and average limits for 18 parameters at four plant locations. Schedules for sampling are specified and results are reported to the EPA on a quarterly basis. Table 10 lists the 18 parameters and also shows the degree of compliance achieved during 1976. The limits shown in the table remain in effect until June 30, 1977.

RADIATION EXPOSURE ESTIMATIONS FOR 1976

Based on the reasoning outlined below, it is concluded that radiation doses to the public from activities at the FMPC during 1976 did not exceed one percent of ERDA radiation protection standards.[1] Intakes of radionuclides from water, food, and air are considered as the only potential sources of exposure. As discussed below, exposure from FMPC radionuclides in water is not likely. A hypothetical radiation dose from FMPC radionuclides in food is calculated and, even if likely to be received, is small enough to be considered insignificant.

Water. As shown in Table 4, radium was the radionuclide present in the plant effluent at the greatest percentage of the limits specified in ERDM-0524. Radium-226 and radium-228, from

TABLE 10 1976 NPDES Summary

Location	Parameter	Daily Maximum mg/l (1)	Daily Average mg/l (1)	Compliance With Permit Limits, %
Manhole - 175	Residual chlorine	0.5	---	100
	Dissolved solids	18000	9000	99
	Nitrate (N)	4000	1800	100
	Ammonia (N)	200	75	84
	Chloride	450	290	99
	Fluoride	15	6	100
	Chromium	0.25	0.15	95
	Iron	3.0	1.2	68
	Oil & Grease	50	30	100
	Flow, MGD	---	0.9	100
	pH	6.5 - 10.0	---	99
Pit Clearwell	Suspended solids	125	70	100
Sewage Treatment Plant Effluent	5- Day BOD	40	20	100
	Suspended solids	40	20	100
	Fecal coliform bacteria (No. per 100 ml)	400	200	100
Storm Sewer Outfall	Suspended solids	100	30	54
	Oil & Grease	15	---	97
	pH	6.5 - 8.5	---	91

Footnote:
(1) Results in mg/l except as noted.

TABLE 11 Radiation Dose Rates At Site Boundary

Location (1)	Dose Rate, mR/hr	
	Range	Average
BS1	0.006 - 0.010	0.008
BS2	0.006 - 0.012	0.010
BS3	0.008 - 0.012	0.010
BS4	0.006 - 0.011	0.009
BS5	0.006 - 0.012	0.009
BS6	0.008 - 0.015	0.012

Footnote:
(1) See Figure 4.

the FMPC amounted to 0.02% of the permissible intake limit for persons living at the plant boundary. Bone is the critical organ for radium and the radiation protection standard for bone is 1.5 rem/year. Therefore, if a resident used downstream water from the Miami River, the possible radiation dose to bone from the intake of FMPC radium would have been 3×10^{-4} rem. This is a negligible dose and, in addition, there is no known downstream use of the river as a potable water supply.

Food. It is possible for locally grown vegetables to contain trace amounts of uranium either from FMPC operations or from uranium which occurs naturally in the soil. The average concentration of uranium found in vegetables grown near the FMPC is 0.016 micrograms per gram wet weight. If we assume that a boundary resident consumes one pound of such vegetables per day, his uranium intake would be 7 micrograms per day. This amount of uranium is 0.005% of the intake permitted in drinking water. The gastrointestinal tract is the critical organ for ingested uranium and the radiation protection standard for the GI tract is 1.5 rem/year. Therefore, the radiation dose to the GI tract from total ingested uranium (including background) would have been 7.5×10^{-5} rem.

Air. As shown in Table 1, the highest average concentration of uranium in air was found at Boundary Sampling Station No. 3. This average is 0.5% of the standard for insoluble uranium given

in ERDM-0524. The critical organ is the lung and the related permissible radiation protection standard is 1.5 rems/year to a boundary resident. Therefore, the radiation dose to the lung from total inhaled uranium (including background) would have been 0.008 rem.

Maximum Radiation Dose At The Site Boundary. The maximum lung exposure at the site boundary from airborne uranium was calculated by two techniques. As noted in the previous section, a value of 0.008 rem or 0.5% of the standard was obtained from the Table 1 data. Using the total amount of airborne uranium released (0.03 Curies), a diffusion equation calculation gives a value of 0.001 rem or 0.007% of the standard.

Throughout 1976, gamma radiation at the six boundary sampling stations was measured with thermoluminescent dosimeters which were changed and processed every three months. Results are given in Table 11. The maximum annual average, 0.012 mR/hr, was measured at BS6. Background radiation in the general area around the FMPC is about 0.010 mR/hr, as indicated by the averages for BS2 and BS4, which are both located about 4000 feet away from the nearest production or storage building. If 0.002 mR/hr at BS6 was due to FMPC operations, the maximum dose at the boundary would have been 0.02 R. This figure is 4% of the ERDAM-0524 limit for a dose to indivtduals at points of maximum probable exposure.

Maximum Dose To An Individual. Airborne uranium is the only significant source of exposure from FMPC operations. As noted in a preceding section, the highest average uranium concentration was found at Boundary Station No. 3. The nearest residence to this location is about 1600 feet away. Assuming an occupancy factor of 80%, the radiation dose at this location due to airborne uranium was 8×10^{-3} rem or about 0.6% of the standard.

Maximum Dose To A Population Group. In addition to providing limits for boundary residents, ERDM-0524 also stipulates that the limits must be reduced by a factor of three when applied to a suitable sample of the exposed population. The community of Ross, Ohio is located about 2.5 miles from the center of the FMPC production area. If Ross residents qualify as a suitable sample of the exposed population, their airborne uranium exposure limit should be one-third of the limit used in Table 1 of this report, or 0.7×10^{-12} μCi/mℓ.

Boundary Station No. 2 is the nearest station to Ross. During 1975, the average airborne uranium concentration at this station was 0.62×10^{-14} μCi/mℓ. This is 0.9% of 0.7×10^{-12} μCi/mℓ. The actual concentration in Ross would have been much lower since the 2.5 miles between FMPC and Ross is about six times the distance from the production area center to the Boundary Sampling Station. Based on diffusion equation calculations, we conservatively assume a reduction to one-third of the boundary concentration, or 0.3% of 0.7×10^{-12} μCi/mℓ.

The uranium limit of 0.7×10^{-12} μCi/mℓ for Ross residents is equivalent to a dose limit of 0.5 rem for a suitable sample of the exposed population. Therefore, the airborne uranium concentration assumed for Ross is equivalent to 0.3% of 0.5 rem, or 1.5×10^{-3} rem.

Additional exposure from possible food intake would be negligible compared with the possible exposure from airborne uranium. As noted earlier, the river is not used as a potable water supply. Therefore, there would be no additional exposure from water-borne radionuclides.

OTHER ENVIRONMENTAL CONTROLS

Sewage Plant Effluent. Effluent from the FMPC Sewage Treatment Plant is combined with other effluents at MH-175 (see Figure 3). Prior to discharge from the Sewage Treatment Plant, however, the effluent is carefully monitored and sampled to determine efficiency of operation and compliance with all applicable standards. The comparison in Table 12 shows that FMPC sewage treatment effluent far surpasses the requirements, in all parameters, of the federal EPA secondary treatment regulations (40 CFR 133.102).

Steam Plant Emissions. The steam generation plant at FMPC consists of four boilers with a total design capacity of 300,000 lbs. of steam per hour. State of Ohio EPA Regulation EP-11-10,

TABLE 12 Sewage Treatment Plant Data

Parameter	EPA Standard			1976 FMPC Monthly Results
B.O.D. (five-day)	30 days (1)	(mg/l)	30	1 avg.
	7 days (1)	(mg/l)	45	7 max.
	Reduction (2)	(%)	≥85	99
Suspended Solids	30 days	(mg/l)	30	4 avg.
	7 days	(mg/l)	45	9 max.
	Reduction	(%)	≥85	96
Fecal Coliform	30 days	(per 100ml)	200	2 avg.
	7 days	(per 100ml)	400	20 max.
pH		(range)	6.0 - 9.0	7.0 - 8.8

Footnotes:
(1) Sampling period.
(2) Removal determined from analysis of Sewage Treatment Plant influent and effluent samples.

"Restriction on emission of particulate matter from fuel-burning equipment" establishes 0.13 pounds of particulates per million BTU input as the maximum limit on emissions of particulates from a steam generation plant with such capacity. Repeated stack sampling tests have shown that the range of particulate emissions from the steam generation plant stacks is 0.25 - 0.40 lbs. per million BTU input.

It has been estimated that only two boilers will be needed for projected future operations at the FMPC. Electrostatic precipitators have been approved for these two units and a subcontract has been awarded for installation. It is anticipated that the installation will be completed by December 1, 1978, and the FMPC will be in compliance with the Ohio particulate emission limit as of December 30, 1978.

Sulfur dioxide emission limits for stationary facilities in Ohio such as the FMPC steam generation plant are in dispute between the regulatory agencies and therefore at this time it is impossible to state compliance status. However, low sulfur coal (1.66% sulfur) was burned during 1976 and the future use of coal containing less than 1% sulfur is planned in order to meet contemplated SO_2 emission requirements.

Particulates From Industrial Processes. Maximum rates of emissions of particulates from industrial processes are prescribed

in State of Ohio EPA Regulation EP-11-11, "Restriction of emission of particulate matter from industrial processes." Through the use of many dust collectors, scrubbers, electrostatic precipitators, and other types of air cleaning equipment, particulate emissions from FMPC process operations are far below the established limits. No problems are anticipated in remaining in compliance with EP-11-11.

Incinerator Operations. The FMPC incinerator is used for the destruction of combustible trash, paper, wood, etc. It is equipped with a gas-fired afterburner to aid in attaining a goal of +1850°F temperature in the stack gases. The particulate emission limit prescribed by State of Ohio EPA Regulation EP-11-09, "Restriction on emissions from incinerators" is 0.10 pounds of particulate matter per 100 pounds of combustible refuse charged. Inaccessability of the stack and the high temperature of the stack gas combine to make sampling difficult and data as to compliance with EP-11-09 has not been obtained. However, during steady state operations with the 1850°F temperature developed, particulate emissions from the incinerator operation are minimized. Open burning is prohibited at FMPC in compliance with State of Ohio EPA Regulation AP3-08.

REFERENCES

(1) U. S. Energy Research & Development Administration, ERDA Manual Chapter 0524, Standards For Radiation Protection. April 8, 1975.

(2) Ohio Environmental Protection Agency, Ambient Air Quality Standards.

(3) Ohio Environmental Protection Agency, Regulation EP-1, Water Quality Standards, effective January 8, 1975.

FEED MATERIALS PRODUCTION CENTER

ENVIRONMENTAL MONITORING REPORT

FOR 1976

DISTRIBUTION LIST

Federal Activities Coordinator, EPA, Region V

Director, State of Ohio, Department of Health

Planning Director, Ohio River Basin Commission

Commissioner of Health, City of Cincinnati

Health Commissioner, County of Hamilton, Board of Health

Atomic Energy Coordinator, State of Ohio, Development Department

Director, State of Ohio Environmental Protection Agency

Southwest District Office, State of Ohio Environmental Protection Agency