46

G-000-106.37

FEED MATERIALS PRODUCTION CENTER ENVIRONMENTAL MONITORING ANNUAL REPORT FOR 1979

05/01/80

NLCO-1164
NLO/DOE
37
REPORT

PROPERTY OF
U.S. DEPT. OF ENERGY
REFERENCE MATERIAL
DO NOT REMOVE

G-000-0046

NLCO-1164
Special

G-000-106.37

FEED MATERIALS PRODUCTION CENTER ENVIRONMENTAL MONITORING ANNUAL REPORT FOR 1979

M. W. Boback and K. N. Ross

National Lead Company of Ohio
P. O. Box 39158
Cincinnati, Ohio 45239

Operated for the U. S. Department of Energy under Contract DE-AC05-76OR01156. This article was supported by the Manufacturing Division.

Date of Report: May 1, 1980

NTIS Price Codes:
Printed Copy. A03
Microfiche Copy. A01

HS
Env '79

CONTENTS

	Page
Summary	1
Introduction	1
Area Features	3
Environmental Standards	5
Sample Collection and Analyses	6
Monitoring Data	14
NPDES Permit	24
Estimation of Radiation Dose	24
Other Environmental Controls	28
References	33
Distribution List (External)	34

FIGURES

1	Area Map	2
2	Feed Materials Production Center Environmental Features	8
3	Liquid Waste Streams	10
4	FMPC and Surrounding Area	11

TABLES

		Page
1	Radioactive Contaminants in Air	15
2	Airborne Particulates	17
3	Radioactive Contaminants in Water	18
4	Radionuclides Discharged Via Sampling Point W2. . .	20
5	Non-Radioactive Contaminants in Water	22
6	Uranium In Soil	23
7	Uranium In Miami River Sediment	23
8	NPDES Summary	26
9	Radiation Dose Rates At Site Boundary	26
10	Population Distribution Within 80-km (50 mi.) of the FMPC	29
11	Summary of 1979 Exposure Data	29
12	Sewage Treatment Plant Data, 1979	30

SUMMARY

This report contains environmental monitoring data collected at the Feed Materials Production Center during 1979. These data show that the discharges of radioactive contaminants from FMPC operations were only a small fraction of the Department of Energy guide levels published in DOE Manual Chapter 0524.[1] The resulting offsite radiation exposures would, therefore, be a small fraction of the standards for uncontrolled areas.

Concentrations of environmentally important nonradioactive contaminants in water and air are also reported. Results show that FMPC operations did not cause State standards for these contaminants to be exceeded.

INTRODUCTION

The Feed Materials Production Center (FMPC) is an industrial facility owned by the United States Department of Energy (DOE) and operated by the National Lead Company of Ohio. The facility is located on a 1050-acre site about 20 miles northwest of Cincinnati, Ohio. Several rural communities are 1-3 miles away. Figure 1 is a map of the area.

The primary work at the FMPC is the production of purified uranium metal and compounds for use at other DOE sites. In regard to uranium-235 content, the uranium may be depleted, normal, or slightly enriched. The average content is close to normal.

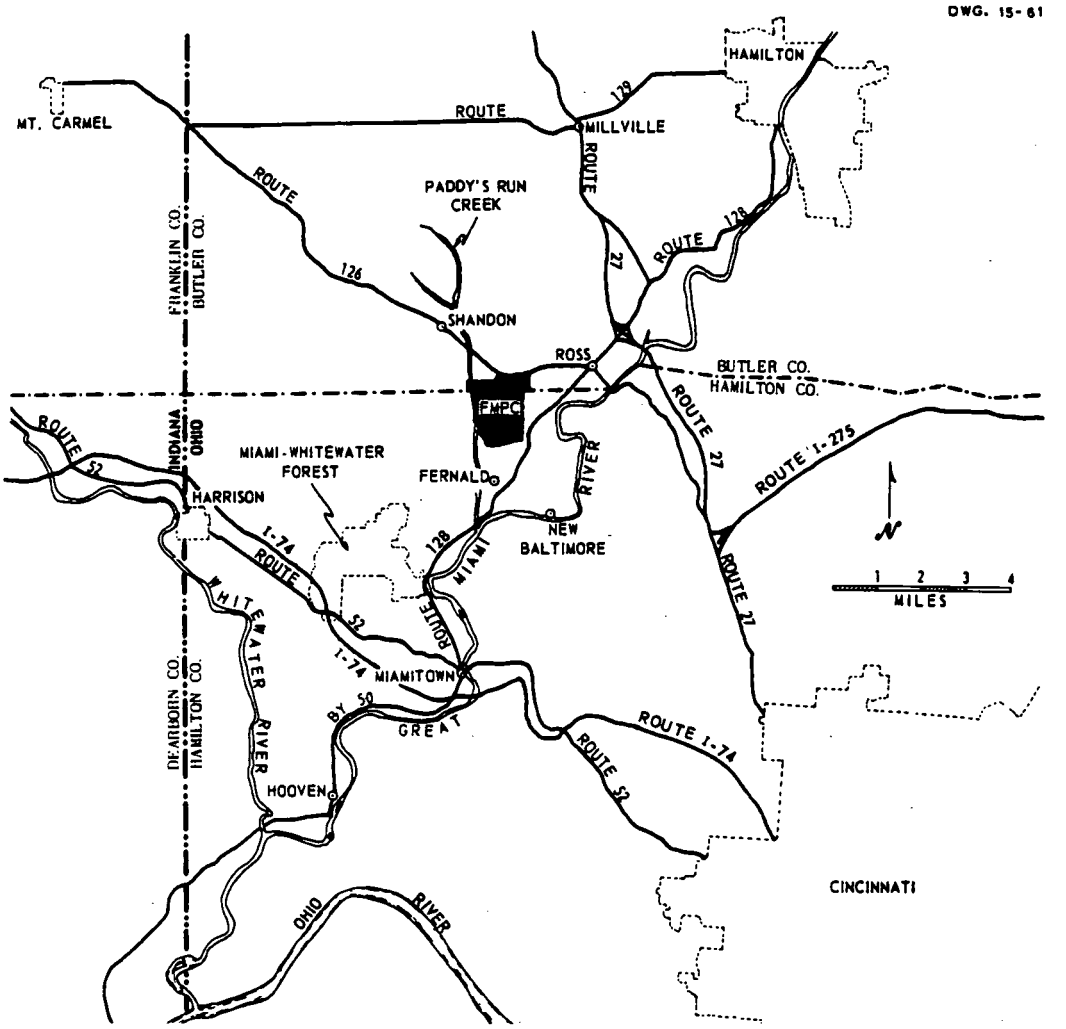

FIGURE 1 Area Map

Uranium production may begin with ore concentrates, recycled uranium from spent reactor fuel, or with various uranium compounds. Impure starting material is dissolved in nitric acid and the uranium is extracted into an organic liquid and then back-extracted into dilute nitric acid to yield a solution of uranyl nitrate.

Evaporation and heating convert the nitrate solution to uranium trioxide (UO_3) powder. This compound is reduced to uranium dioxide (UO_2) with hydrogen and then converted to uranium tetrafluoride (UF_4) by reaction with anhydrous hydrogen fluoride. Uranium metal is produced by reacting UF_4 and magnesium metal in a refractory-lined reduction vessel. This primary uranium metal is then remelted with scrap uranium metal to yield a purified uranium ingot which is extruded to form rods or tubes. Sections are then cut and machined to final dimensions. These machined cores are shipped to other DOE sites for canning and final assembly into reactor fuel elements.

Periodically, small amounts of thorium are processed. Thorium production steps, in general, are similar to those followed in uranium production. Final products may be purified thorium nitrate solution, solid thorium compounds, or metal.

AREA FEATURES

Glacial action during the time of the Illinoian and Wisconsinan ice sheets gave the area its basic geological features. In the FMPC area, outwash from retreating glaciers filled in the wide valley of

a large ancient river. Through this fill, the Miami River has cut its present course and the river bed is now located about 60 feet below the original surface level of the glacial deposits. Underlying the FMPC is about 50 feet of clay-rich till which may be a remnant of a large glacial moraine. Beneath the till is about 150 feet of sand and gravel which fills the buried valley of the pre-glacier river. In the FMPC area, that ancient valley is about three miles wide.

The area east of the FMPC, in the Miami River flood plain, has fertile soil and is reported to contain some of the best farm land in the State. In the gently rolling uplands west of the flood plain, the thin soil mantle over the glacial drift is less fertile.

Although there are several small industries nearby, the major economic activities in this rural area are farming, dairying, and the raising of beef cattle. Farm crops include sweet corn, field corn, soybeans and wheat. Truck crops are widely grown and sold at local produce stands and in nearby urban markets.

The glacial till and the Miami River have provided two other important area products--ground water and gravel. A company located about one mile from the FMPC pumps out about 20 million gallons of ground water per day, chiefly for industries in and near Cincinnati. Pumping began just before the FMPC was built. The permeable glacial deposits, called valley-train, house the bountiful deep aquifer from

which the water company and the FMPC draw supplies. The Miami River continuously provides part of the aquifer recharge.

Gravel pit operations are a familiar sight in the Miami Valley. Some operations are located along the river, with a sand dike separating gravel washwater from the river. Other operations are within the flood plain, but are several hundred feet from the river.

Upstream from the FMPC the river receives substantial amounts of industrial and municipal wastes. The cities of Dayton, Middletown, Hamilton, and Fairfield are major contributors. Little recreational use is made of the river. Downstream from the FMPC the population is sparse and industries are small and scattered. About 18 miles away, the Miami meets the Ohio River.

In 1979, total precipitation at the FMPC was 45 inches, measured as water. Monthly maximum and minimum values were 7.4 inches during September and 1.1 inches during March.

ENVIRONMENTAL STANDARDS

There are several sets of standards which can be applied to environmental samples collected in connection with FMPC operations. These standards have been set by DOE and the State of Ohio Environmental Protection Agency (OEPA).

DOE standards for radiation protection and environmental monitoring must be met by contract operators such as the National Lead Company of Ohio.[1,2] Concentration Guides for radionuclides are established separately for air and water in work areas and in areas outside of DOE control. For environmental monitoring purposes, DOE criteria for air and water in uncontrolled areas are used as standards. At the FMPC, criteria for offsite or ambient air are applied to samples collected at the plant boundary. Criteria for offsite water are applied to stream and river samples collected downstream from the point where plant effluent is discharged, but upstream from any known use of the water as a drinking water supply.

Criteria used for nonradioactive contaminants in ambient air, the Great Miami River, and Paddy's Run are taken from standards adopted by the Ohio EPA.[3, 4] In rivers and streams of the State of Ohio, water quality standards apply beyond a mixing zone permitted for industrial and municipal effluents.

SAMPLE COLLECTION AND ANALYSIS

Air. Conversion of impure uranium and thorium compounds to reactor-grade feed materials involves operations which generate radioactive dust, nuisance dusts, and corrosive mists or reaction products. Ventilation and air cleaning systems are used to confine this air and remove airborne contaminants, including valuable material which is returned to the production processes. The filtered

or scrubbed air is exhausted to the atmosphere. Sampling of these stack exhausts is maintained on a continuous schedule to determine the operating condition of the air cleaning systems.

Samples of particulate matter in air are continuously collected at six permanent sampling stations located on the project's outer boundary (see Figure 2). At each boundary station, air is drawn at a rate of about one cubic meter per minute through an 8 inch x 10 inch filter which is changed weekly. Filters are weighed before use and then reweighed after changing to obtain the weight of collected dust. After reweighing, the filter and its collection of dust are dissolved in acid and the solutions are analyzed for uranium and alpha and beta radioactivity. Counting is done about seven days after the end of the collection period. After these analyses are completed the remaining solution is held to provide a long-term composite for thorium analyses. Frequent thorium analyses are not considered necessary because of the small amount of thorium processed and the low concentration of thorium found in the boundary samples.

Water. Each of the individual production plants on the project has sumps and equipment for the collection and initial treatment of process waste water. Uranium and thorium may be recovered as part of the treatment. Effluents from the plants are collected at a central facility, called the General Sump, for additional treatment. The treated wastes are filtered or are discharged

FIGURE 2
FEED MATERIALS PRODUCTION CENTER
ENVIRONMENTAL FEATURES

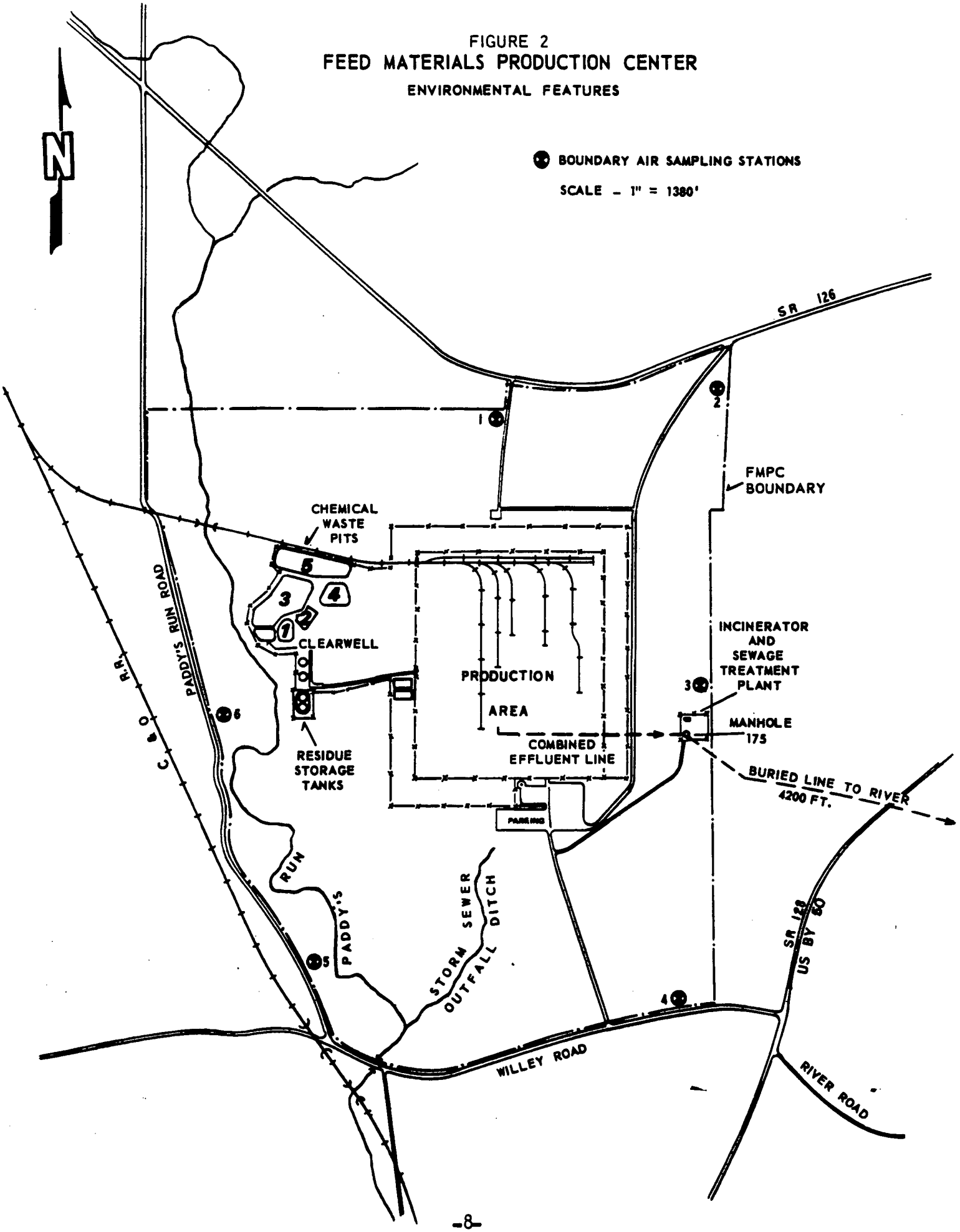

into a large pit where the solids settle to the bottom. Both the filtrate and clear effluent from the pit are combined with the other water streams and discharged to the Great Miami River. See Figure 3 for a diagram of the process.

Water sampling locations are shown in Figure 4. At the final access point on the plant effluent line, W2, a Parshal Flume type water sampler continuously collects a sample which is proportional to the total flow. Twenty-four-hour samples from this point are collected daily for analyses. Each sample is analyzed for uranium, alpha and beta radioactivity, chloride, fluoride, nitrate, non-filterable solids, and pH. One- and two-week composites of the daily samples are analyzed for radium-226 and radium-228 and one-month composites are analyzed for thorium. Long-term composites are analyzed for other radionuclides of interest.

From sampling point W2 the plant effluent is discharged to the Great Miami River through a buried pipeline.

In Figure 4, the river sampling points are identified as W1, W3, and W4. At W1, upstream from the effluent discharge, a daily grab sample is collected. At point W3, downstream on the river from the effluent discharge, 24-hour samples are collected by a continuous sampler. Point W4 is at Miamitown, 4.7 miles downstream from the mouth of Paddy's Run. Grab samples are collected weekly at this point.

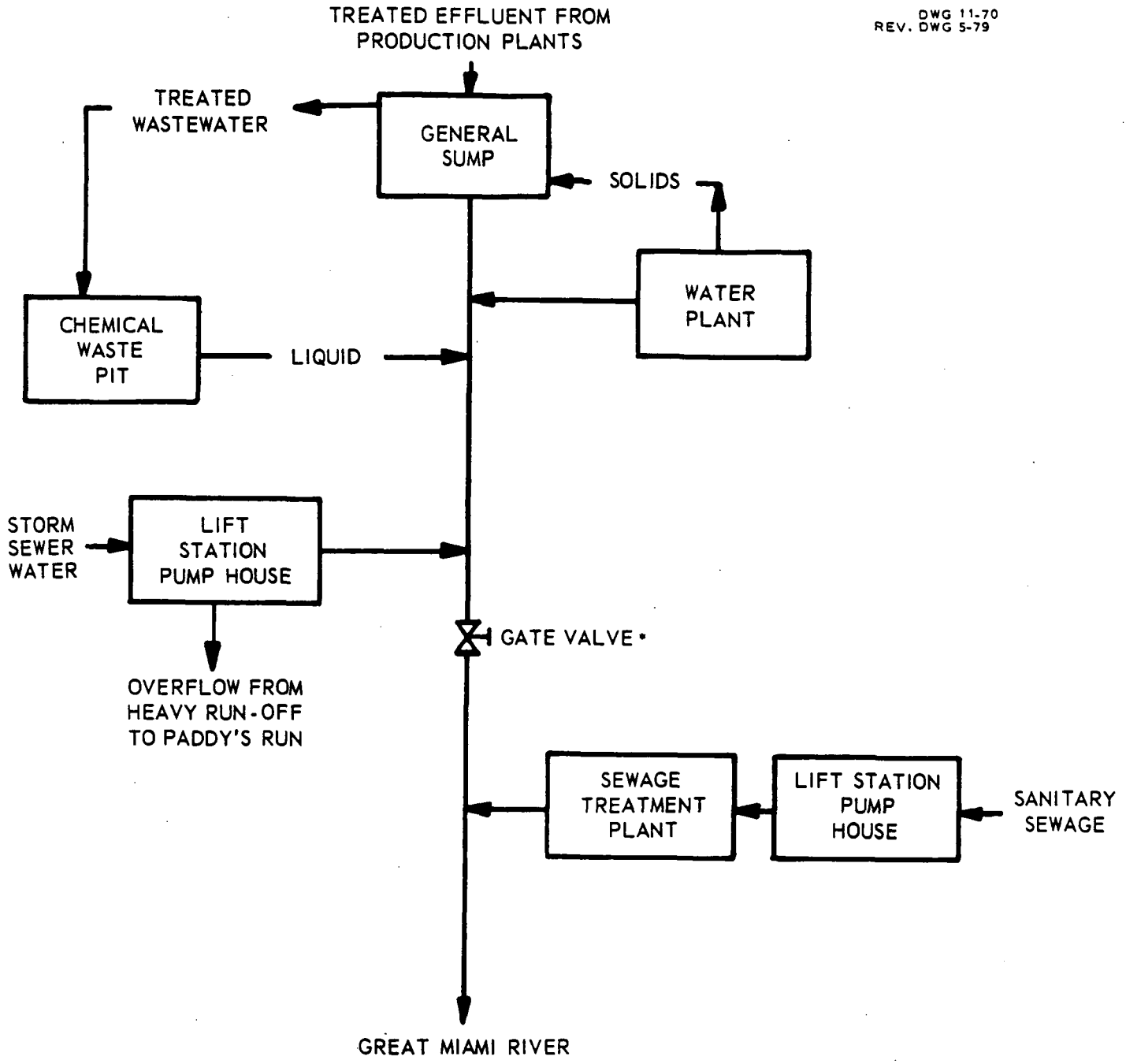

**Storm sewer water can be diverted to the Chemical Waste Pit or the General Sump by first halting the pumping from both locations and then closing the gate valve.*

FIGURE 3 Liquid Waste Streams

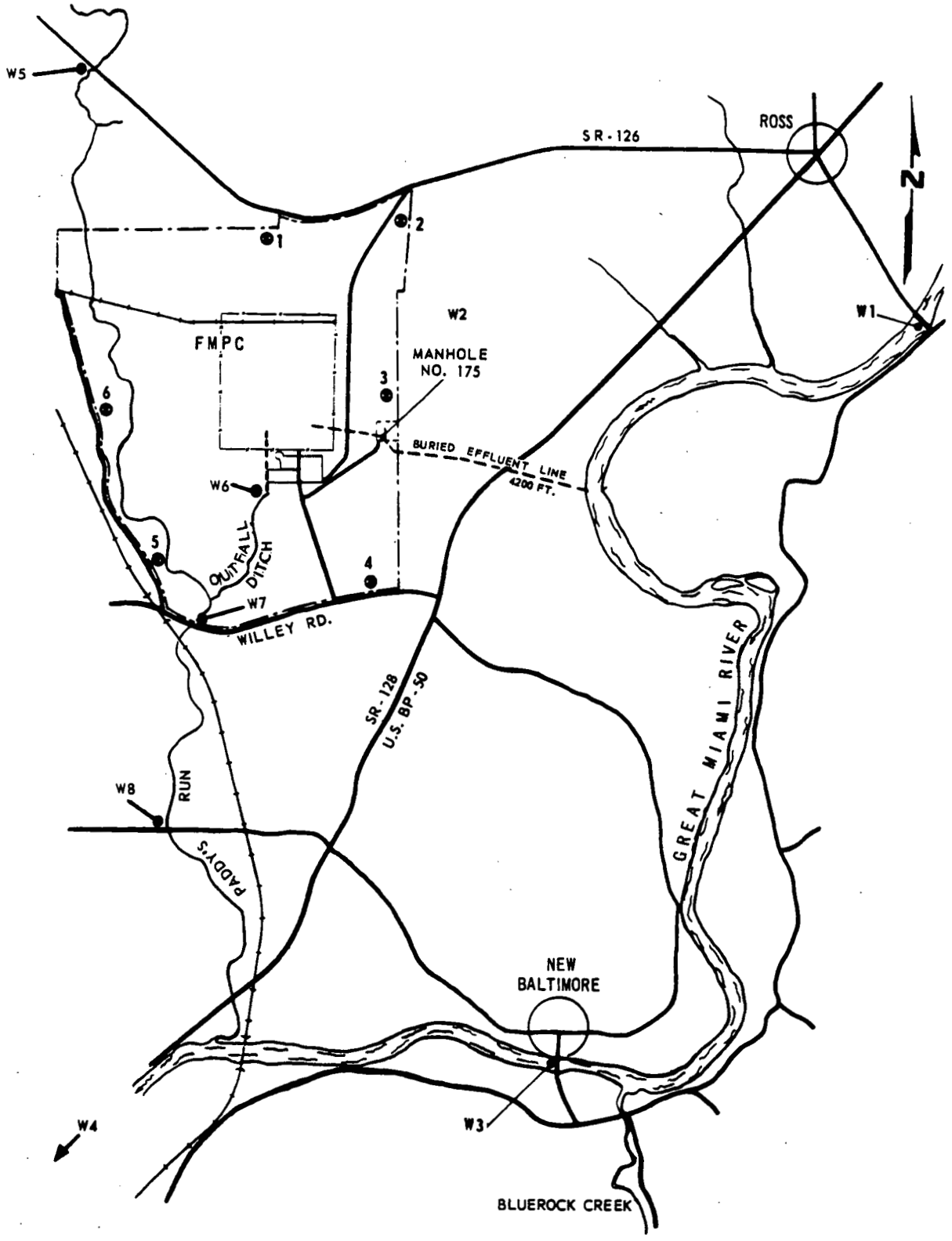

W4 is located at Miamitown,
4.7 miles from Paddy's Run.

FIGURE 4 FMPC and Surrounding Area

BOUNDARY AIR SAMPLING STATIONS.

• W8 - WATER SAMPLING LOCATIONS

SCALE: 1" = 3055'

Paddy's Run is a small stream which flows along the site's west edge and joins the Miami River about two miles away from the FMPC southern boundary. During periods of heavy runoff, excess water in the storm sewer system overflows at sampling point W6 to a drainage ditch which discharges into Paddy's Run. Under normal conditions, all water reaching the storm sewer lift station is pumped to the line which leads to the Miami River (see Figure 3). It is unlikely that the intermittent flow of storm water would have any effect on river water quality since it contains no process waste discharges.

At least one sample per week from each of the three river sampling points is analyzed for uranium, alpha and beta radioactivity, chloride, fluoride, nitrate, non-filterable solids, and pH. Monthly composites from each location are analyzed for radium-226 and radium-228.

Paddy's Run sampling locations are shown in Figure 4 as W5, W7, and W8. Grab samples are collected once each week at W5 and W7. A sample is collected at W8 if there is no flow at W7. These samples are analyzed for uranium, alpha and beta radioactivity, chloride, fluoride, nitrate and pH.

Soil and River Sediment. Once each year, soil samples are collected near the six boundary sampling stations. Each sample consists of six cores, 2 cm diameter and 10 cm deep. The cores are taken

about 1.5 meters apart. These samples are analyzed for uranium to observe the possible contribution from stack effluents.

Sediment samples were collected from the banks of the Miami River and analyzed for uranium to determine if material was accumulating below the site outfall. Sediment from the river bank, near the water line, was collected by scraping up the top two inches. Only the portion passing a 50-mesh screen was analyzed.

Quality Assurance. Quality assurance is an integral part of the overall environmental monitoring effort. Included among the various interlaboratory quality assurance practices are daily calibrations of instrumentation and routine analyses of blanks, standard solutions and spiked sample aliquots. The values obtained from these analyses have been within the ranges which indicate the analytical systems are under control and the results being obtained are reliable. Uranium control samples provided by another onsite analytical laboratory are analyzed daily as part of the intralaboratory quality assurance activities. The values which have been obtained for these daily control samples show that the procedure used for uranium analyses produces reliable data. NLO also participates in the DOE quality assurance program which is conducted by the DOE Environmental Measurements Laboratory (EML). In this program, laboratories receive samples of various media for analysis. Results are reported to EML for comparison with the values established by EML. NLO has been participating in this quality assurance activity by analyzing water, soil, and air filter samples for uranium.

The average of the ratio of NLO results to the EML values for these analyses was 1.20 during 1979.

Quality control samples provided by the U. S. Environmental Protection Agency's Environmental Monitoring and Support Laboratory, Cincinnati, Ohio, are also analyzed as part of the quality assurance program. Samples have been analyzed for pH, non-filterable residue, nitrate nitrogen, chloride, fluoride, and sulfate. Results obtained by NLO have all been within the guidelines recommended by EPA.

MONITORING DATA

Environmental data collected during 1979 are given in the accompanying tables. Comparisons are made with the applicable standard for each significant contaminant. Confidence limits given in the tables are derived from analytical variations or from the statistical error inherent in radioactivity determinations.

Data in Table 1 show that average airborne uranium and thorium concentrations at the boundary sampling stations were no greater than 0.5% of the standard for offsite areas. It is concluded from these data that any offsite radiation exposure resulting from FMPC airborne contaminants would be a small fraction of the standards given in reference 1.

According to stack monitoring data, the total amount of uranium released to the atmosphere during 1979 was 0.02 Curie.

TABLE 1 Radioactive Contaminants in Air

Contaminant	Sampling Point (1)	Number of Samples	Maximum Conc. Found		Minimum Conc. Found		Average Concentration Found				Detection Level	Standard
			$\mu g/m^3$	$\mu Ci/mL$	$\mu g/m^3$	$\mu Ci/mL$	$\mu g/m^3$	$\mu Ci/mL$	% of Standard	95% Confidence Level		
Uranium	BS1	48	0.24	8.2×10^{-14}	0.002	6×10^{-16}	0.020	6.7×10^{-15}	0.3	$\pm 1.4 \times 10^{-15}$ $\mu Ci/mL$	2×10^{-16} $\mu Ci/mL$	2×10^{-12} $\mu Ci/mL$ (2)
	BS2	49	0.12	4.0×10^{-14}	0.001	3×10^{-16}	0.016*	5.5×10^{-15}*	0.3			
	BS3	49	0.68	2.3×10^{-13}	0.002	6×10^{-16}	0.028	9.6×10^{-15}	0.5			
	BS4	49	0.22	7.5×10^{-14}	0.001	2×10^{-16}	0.012	4.1×10^{-15}	0.2			
	BS5	49	0.35	1.2×10^{-13}	0.001	3×10^{-16}	0.016	5.4×10^{-15}	0.3			
	BS6	46	0.24	8.1×10^{-14}	0.001	3×10^{-16}	0.014	4.7×10^{-15}	0.2			
Thorium	BS1	1 (3)	NA (4)	NA	NA	NA	2.4×10^{-4}	2.7×10^{-17}	0.003	$\pm 1 \times 10^{-17}$ $\mu Ci/mL$	1×10^{-17} $\mu Ci/mL$	1×10^{-12} $\mu Ci/mL$ (5)
	BS2	1					2.3×10^{-4}	2.6×10^{-17}	0.003			
	BS3	1					3.9×10^{-4}	4.4×10^{-17}	0.004			
	BS4	1					2.9×10^{-4}	3.3×10^{-17}	0.003			
	BS5	1					2.5×10^{-4}	2.8×10^{-17}	0.003			
	BS6	1					3.2×10^{-4}	3.6×10^{-17}	0.003			
Gross Alpha Radioactivity	BS1	48	NA	7.6×10^{-14}	NA	4×10^{-16}	NA	6.3×10^{-15}	0.3	$\pm 1.4 \times 10^{-15}$ $\mu Ci/mL$	1×10^{-16} $\mu Ci/mL$	2×10^{-12} $\mu Ci/mL$ (2)
	BS2	49		3.9×10^{-14}		3×10^{-16}		3.9×10^{-15}	0.2			
	BS3	49		2.2×10^{-13}		8×10^{-16}		9.7×10^{-15}	0.5			
	BS4	49		6.6×10^{-14}		4×10^{-16}		4.7×10^{-15}	0.2			
	BS5	49		1.1×10^{-13}		2×10^{-16}		5.2×10^{-15}	0.3			
	BS6	46		7.8×10^{-14}		2×10^{-16}		4.7×10^{-15}	0.2			
Gross Beta Radioactivity	BS1	48	NA	1.1×10^{-13}	NA	8.9×10^{-15}	NA	2.5×10^{-14}	0.02	$\pm 6 \times 10^{-15}$ $\mu Ci/mL$	1×10^{-16} $\mu Ci/mL$	1×10^{-10} $\mu Ci/mL$ (6)
	BS2	49		5.9×10^{-14}		6.2×10^{-15}		1.9×10^{-14}	0.02			
	BS3	49		2.1×10^{-13}		7.3×10^{-15}		2.5×10^{-14}	0.03			
	BS4	49		7.8×10^{-14}		7.9×10^{-15}		2.0×10^{-14}	0.02			
	BS5	49		1.1×10^{-13}		8.0×10^{-15}		2.2×10^{-14}	0.02			
	BS6	46		1.1×10^{-13}		1.0×10^{-14}		2.4×10^{-14}	0.02			

Footnotes:

(1) See sampling locations shown in Figure 2.

(2) DOE Manual Chapter 0524, Annex A, Table II, Concentration Guide for Natural Uranium.

(3) Each sample is a composite of 46-49 weekly samples.

(4) Not applicable

(5) DOE Manual Chapter 0524, Annex A, Table II, Concentration Guide for Natural Thorium.

(6) DOE Manual Chapter 0524, Annex A, Table II, Note 3, Concentration Guides for Mixtures of Unidentified Radionuclides.

* Average results for BS2 should be 0.012 $\mu g/m^3$ and 5.9×10^{-15} $\mu Ci/mL$.

Methods are being investigated for determining the concentration of radon-222 at the site boundary. Preliminary sampling over one-week periods indicates concentrations up to 0.6 picocuries per liter (pCi/L). A long-term average may be about 0.3 pCi/L, which is 10% of the DOE limit for uncontrolled areas. The naturally-occurring background concentration of radon-222 in this region is about 0.1 pCi/L.

The concentrations of particulate matter found at the boundary are given in Table 2. At all locations the average concentration of particulate matter did not exceed the OEPA limit for the annual arithmetic mean. The FMPC contribution to ambient air particulate matter cannot be assessed from these data. Except for BS-3, all boundary stations are located near roads where traffic dust is generated. Also, BS-4, BS-5, and BS-6 are located near agricultural lands, and periodic farming activities cause high dust levels.

Table 3 contains information on uranium, radium-226, radium-228, and alpha and beta radioactivity in the Great Miami River. There is no significant difference between the upstream and downstream concentrations of radium and uranium. All concentrations are well within the DOE limits for water in uncontrolled areas.

Uranium and radioactivity data for Paddy's Run are also given in Table 3. At the downstream sampling points the average uranium concentration was less than 0.03% of the DOE standard for

TABLE 2 Airborne Particulates

Sampling Point (1)	Number of Samples	Concentration Range		Average Concentration			Detection Level	Standard (2)
		Maximum $\mu g/m^3$	Minimum $\mu g/m^3$	$\mu g/m^3$	% of Standard	95% Confidence Level		
BS1	48	164	27	48	80	±5%	1 $\mu g/m^3$	60 $\mu g/m^3$
BS2	49	61	22	42	70			
BS3	49	59	19	34	57			
BS4	49	75	15	47	78			
BS5	49	90	12	42	70			
BS6	46	115	10	43	72			

Footnotes:

(1) See sampling locations shown in Figure 2.

(2) State of Ohio Ambient Air Quality Standard.

TABLE 3 Radioactive Contaminants in Water

Contaminant	Sampling Point (1)	Number of Samples	Maximum Conc. Found		Minimum Conc. Found		Average Concentration Found				Detection Level μCi/mL	Standard μCi/mL
			mg/l	μCi/mL	mg/l	μCi/mL	mg/l	μCi/mL	% of Standard	95% Confidence Limits (2)		
Uranium	W1	52	0.009	3.0×10^{-9}	0.001	3.4×10^{-10}	0.004	1.4×10^{-9}	0.007	$\pm 0.7 \times 10^{-9}$ μCi/mL	3.4×10^{-10}	2×10^{-5} (5)
	W3	52	0.009	3.0×10^{-9}	0.001	3.4×10^{-10}	0.004	1.4×10^{-9}	0.007			
	W4	52	0.008	2.7×10^{-9}	0.001	3.4×10^{-10}	0.004	1.4×10^{-9}	0.007			
	W5	52	0.030	1.0×10^{-8}	0.001	0.3×10^{-9}	0.004	1.4×10^{-9}	0.007			
	W7	29	0.052	1.8×10^{-8}	0.009	3.0×10^{-9}	0.016	5.4×10^{-9}	0.027			
	W8	25	0.024	0.8×10^{-8}	0.003	1.0×10^{-9}	0.012	4.1×10^{-9}	0.020			
Radium-226	W1	12 (3)	NA (4)	4.5×10^{-10}	NA	$< 4.5 \times 10^{-10}$	NA	$< 4.5 \times 10^{-10}$	< 1.5	$\pm 4.5 \times 10^{-10}$ μCi/mL	4.5×10^{-10}	3×10^{-8} (5)
	W3	12		4.5×10^{-10}		$< 4.5 \times 10^{-10}$		$< 4.5 \times 10^{-10}$	< 1.5			
	W4	12		4.5×10^{-10}		$< 4.5 \times 10^{-10}$		$< 4.5 \times 10^{-10}$	< 1.5			
Radium-228	W1	12 (3)	NA	9.0×10^{-10}	NA	$< 4.5 \times 10^{-10}$	NA	$< 4.9 \times 10^{-10}$	< 1.6	$\pm 4.5 \times 10^{-10}$ μCi/mL	4.5×10^{-10}	3×10^{-8} (5)
	W3	12		4.5×10^{-10}		$< 4.5 \times 10^{-10}$		$< 4.5 \times 10^{-10}$	< 1.5			
	W4	12		9.0×10^{-10}		$< 4.5 \times 10^{-10}$		$< 4.9 \times 10^{-10}$	< 1.6			
Gross Alpha	W1	52	NA	4.5×10^{-9}	NA	$< 0.9 \times 10^{-9}$	NA	$< 2.2 \times 10^{-9}$	< 7	$\pm 0.8 \times 10^{-9}$ μCi/mL	0.9×10^{-9}	3×10^{-8} (6)
	W3	52		4.5×10^{-9}		$< 0.9 \times 10^{-9}$		$< 1.8 \times 10^{-9}$	< 6			
	W4	52		4.0×10^{-9}		$< 0.9 \times 10^{-9}$		$< 2.2 \times 10^{-9}$	< 7			
	W5	52		2.0×10^{-8}		$< 0.9 \times 10^{-9}$		$< 3.6 \times 10^{-9}$	< 12			
	W7	29		3.5×10^{-8}		4.5×10^{-9}		1.0×10^{-8}	33			
	W8	25		2.2×10^{-8}		2.2×10^{-9}		8.6×10^{-9}	29			
Gross Beta	W1	52	NA	4.0×10^{-8}	NA	4.5 ~~0.4~~ $\times 10^{-9}$	NA	1.4×10^{-8}	47	$\pm 0.3 \times 10^{-8}$ μCi/mL	0.2×10^{-8}	3×10^{-8} (6)
	W3	52		3.6×10^{-8}		4.5 ~~0.4~~ $\times 10^{-9}$		0.9×10^{-8}	30			
	W4	52		2.7×10^{-8}		4.5 ~~0.4~~ $\times 10^{-9}$		0.9×10^{-8}	30			
	W5	52		9.0×10^{-8}		4.5×10^{-9}		1.8×10^{-8}	60			
	W7	29		4.5×10^{-8}		4.5×10^{-9}		1.4×10^{-8}	47			
	W8	25		7.7×10^{-8}		4.5×10^{-9}		2.7×10^{-8}	90			

Footnotes:

(1) See sampling locations shown in Figure 2.

(2) Confidence limits are given for the average concentration.

(3) Each sample was a one-month composite of daily samples (W1 and W3) or of samples collected once each week (W4).

(4) Not applicable.

(5) DOE Manual Chapter 0524, Annex A, Table II, Concentration Guides for natural uranium, natural thorium, radium-226 and radium-228.

(6) DOE Manual Chapter 0524, Annex A, Note 2, Concentration Guides for mixtures of unidentified radionuclides.

uncontrolled areas. Alpha and beta radioactivity, which is due chiefly to uranium and daughters, was within the DOE limits for unidentified emitters.

Information given in Table 4 shows the total quantity of 11 radionuclides discharged during 1979 and the average concentrations in the plant effluent as measured at the final onsite access point, W2. The average concentrations are all below the DOE limits for water in uncontrolled areas. Analysis of the plant effluent provides basic information for assessing the adequacy of waste treatment efforts and the control of contaminant releases. It is much easier to get continuous representative samples of the effluent than of the river and radionuclides can generally be determined with greater reliability in effluent samples than by analysis of river samples after the radionuclides have undergone a large dilution.

During 1979, the average flow of plant effluent was 0.55 million gallons per day. The average river flow was 3586 million gallons per day, which means that on an average basis, each gallon of FMPC effluent mixed with 6520 gallons of river water. At this volume ratio, radium-226 and radium-228 from the FMPC would have amounted to less than 0.01% each, of the DOE Manual Chapter 0524 limit for water in uncontrolled areas. The percentages shown for the other nuclides in Table 4 would have been similarly reduced.

TABLE 4 Radionuclides Discharged Via Sampling Point W2 (1)

Radionuclide	Total Curies	Average Conc. Found		Standard (2)
		μCi/mL	% of Standard	μCi/mL
Cesium - 137	6.1×10^{-3}	8.0×10^{-9}	0.04	2×10^{-5}
Neptunium - 237	1.9×10^{-4}	2.5×10^{-10}	0.008	3×10^{-6}
Plutonium - 238	1.0×10^{-5}	1.3×10^{-11}	<0.001	5×10^{-6}
Plutonium - 239	2.9×10^{-5}	3.8×10^{-11}	<0.001	5×10^{-6}
Radium - 226	7.8×10^{-4}	1.0×10^{-9}	3.3	3×10^{-8}
Radium - 228	9.3×10^{-3}	1.2×10^{-8}	40	3×10^{-8}
Ruthenium - 106	1.8×10^{-3}	2.4×10^{-9}	0.02	1×10^{-5}
Strontium - 90	3.2×10^{-3}	4.2×10^{-9}	1.4	3×10^{-7}
Technetium - 99	3.4	4.5×10^{-6}	1.5	3×10^{-4}
Thorium	7.6×10^{-4}	1.0×10^{-9}	0.1	1×10^{-6}
Uranium	3.8×10^{-1}	5.0×10^{-7}	2.5	2×10^{-5}

Footnotes:

(1) Radionuclides in the plant effluent which is discharged to the Great Miami River through a buried pipeline. An additional 2.3×10^{-2} Curie of uranium was contained in the storm sewer overflow discharged into a ditch at sampling point W6. The ditch empties into Paddy's Run above sampling point W7.

(2) DOE Manual Chapter 0524, Annex A, Table II, Concentration Guides for Water in Uncontrolled Areas. These Guides are for water such as the Great Miami River and are not meant to be applied to the plant effluent. They are listed here for comparison purposes.

Operations at the FMPC did not cause any State standard for nonradioactive contaminants to be exceeded in the Great Miami River and Paddy's Run. The contaminants listed in Table 5 were selected for analysis and reporting because of the possibility of adding to the river concentrations greater than 1% of the applicable State standards.

There are no standards for comparison with the results for uranium in soil listed in Table 6. Although normal concentration for uranium in local soil is 1-4 μg/g, there are no hazards associated with the increased concentrations caused by FMPC operations. Penetrating radiation from uranium is slight and the exposure contribution at the boundary locations would be considerably less than 1% of the Radiation Protection Standard for people in uncontrolled areas.

The results of sediment sampling given in Table 7 do not indicate any build-up of uranium along the edge of the water where settling might be expected to occur. Most of the uranium present in the site effluent is soluble, probably existing as a carbonate complex, and remains soluble after mixing in the river. Furthermore, periodic flooding, which is severe enough to cause channel alteration and bank erosion, scours the river bed and banks and prevents any long-term sediment accumulation.

TABLE 5 Non-Radioactive Contaminants in Water

Contaminant	Sampling Point (1)	Number of Samples	Maximum Conc. Found mg/L	Minimum Conc. Found mg/L	Average Concentration mg/L	Average Concentration % of Standard	Average Concentration 95% Confidence Limits	Detection Limit	Standard (2)
Fluoride	W1	52	1.0	0.2	0.4	20	±15%	0.1 mg/L	2.0 mg/L
	W3	52	0.7	0.2	0.4	20			
	W4	52	0.7	0.2	0.4	20			
	W5	12	0.3	0.2	0.2	15			
	W7	11	0.3	0.2	0.2	15			
Nitrate Nitrogen	W1	52	6.0	2.2	3.4	15	±10%	0.3 mg/L	22 mg/L
	W3	52	5.9	2.0	3.5	15			
	W4	52	5.8	2.2	3.4	15			
	W5	12	15	5.2	8.8	~~25~~ 40			
	W7	12	18	4.1	9.2	~~26~~ 42			
Chloride	W1	52	108	17	45	18	±5%	5 mg/L	250 mg/L
	W3	52	117	18	45	18			
	W4	52	123	17	45	18			
	W5	12	32	11	23	9			
	W7	12	24	10	19	8			
pH	W1	52	8.6 (3)	7.5	NA (4)	NA	±0.1 pH units	NA	6.5 – 9.0
	W3	52	8.6	7.3					
	W4	52	8.6	7.4					
	W5	12	8.1	6.9					
	W7	12	8.3	6.9					

Footnotes:

(1) See sampling locations shown in Figure 4.

(2) Ohio EPA Water Quality Standards, Administrative Code Chapter 3745-1.

(3) pH is reported in standard units.

(4) Not applicable.

TABLE 6 Uranium in Soil

Sampling Point (2)	Uranium Concentration (1)			Detection Level
	μg/g	μCi/g	95% Confidence Level	
BS1	12	4.0×10^{-6}	±25%	0.5 μg/g
BS2	17	5.7×10^{-6}		
BS3	110	3.7×10^{-5}		
BS4	11	3.7×10^{-6}		
BS5	11	3.7×10^{-6}		
BS6	14	4.7×10^{-6}		

Footnotes:

(1) Results on dry basis.

(2) See sampling locations shown in Figure 2.

TABLE 7 Uranium in Miami River Sediment

Distance from FMPC Outfall	Uranium Concentration (1)			Detection Level
	μg/g	μCi/g	95% Confidence Level	
Upstream				
3.7 miles	2.0	0.7×10^{-6}	±25%	0.5 μg/g
1.5 miles	2.8	0.9×10^{-6}		
Downstream				
50 feet	4.2	1.4×10^{-6}	±25%	0.5 μg/g
0.8 mile	2.4	0.8×10^{-6}		
3.3 miles	1.8	0.6×10^{-6}		
4.5 miles (2)	1.8	0.6×10^{-6}		
4.7 miles (3)	2.6	0.9×10^{-6}		

Footnotes:

(1) Results on dry basis.

(2) Upstream of mouth of Paddy's Run.

(3) Downstream of mouth of Paddy's Run.

NPDES PERMIT

A permit to discharge liquid effluent has been issued to the FMPC by the U.S. Environmental Protection Agency. The permit was issued under the National Pollutant Discharge Elimination System (NPDES) and it contains maximum and average limits for 18 parameters at four plant locations. Schedules for sampling are specified and results are reported to the EPA on a quarterly basis. Table 8 lists the 18 parameters and also shows the degree of compliance achieved during 1979.

ESTIMATION OF RADIATION DOSE

Maximum potential dose at the site boundary. During 1979, the highest average concentration of airborne uranium found at the FMPC site boundary was 9.6×10^{-15} µCi/mL, at boundary station BS-3. See Table 1. The radiation dose to the lungs which would have been received from this concentration was calculated using a methodology based on transport and uptake models.[5] This method yields a 50-year lung dose commitment of 7.3 mrems, assuming the year-long inhalation of airborne uranium at a concentration of 9.6×10^{-15} µCi/mL. Thorium, at an average concentration of 4.4×10^{-17} µCi/mL, adds 0.5 mrems to the 50-year lung dose commitment.

The Great Miami River is not used as a source of drinking water but calculations of 50-year dose commitments were made assuming an individual took water from a location downstream from the FMPC discharge point. A daily intake of 2.2 liters per day was

assumed.[5] This intake, for a full year, would result in a 50-year dose commitment of 0.3 mrem to the bone and 0.03 mrem to the total body.

Throughout 1979, gamma radiation at the six boundary sampling stations was measured with thermoluminescent dosimeters which were changed and processed every three months. See Table 9. The maximum annual average, 0.015 mR/hr, was measured at BS-6. Background radiation in the general area around the FMPC is about 0.009 - 0.010 mR/hr, as indicated by the data for BS-2 and BS-4, which are both located about 4000 feet away from the nearest production or storage building.

If 0.009 mR/hr is used as the natural background, about 0.006 mR/hr at BS-6 was due to FMPC operations. This results in a maximum potential annual exposure at the boundary of 0.052 R. This exposure is equivalent to about 10% of the ERDAM-0524 dose limit for individuals at points of maximum exposure.

Maximum dose to an individual. The highest average concentration of airborne uranium and thorium at an offsite residence occurred near BS-3. Diffusion equation calculations[6] yield average uranium and thorium concentrations of 3.34×10^{-15} µCi/mL and 1.53×10^{-17} µCi/mL, respectively, for this location. Using these air concentrations, and assuming an occupancy time factor of 80%, a 50-year lung dose commitment of 2.1 mrems was calculated.

TABLE 8 NPDES Summary

Location	Parameter	Daily Maximum mg/L (1)	Daily Average mg/L (1)	Compliance With Permit Limits, %
Manhole - 175	Residual chlorine	0.5	–	100
	Dissolved solids	12000	6000	100
	Nitrate (N)	2000	900	100
	Ammonia (N)	200	75	100
	Chloride	350	290	99
	Fluoride	10	6	100
	Chromium	0.10	0.05	100
	Iron	3.0	1.2	100
	Oil & Grease	–	15	100
	Flow, MGD	0.9	–	100
	pH	6.5 – 10.0	–	100
Pit Clearwell	Suspended solids	40	20	99
Sewage Treatment Plant Effluent	5-Day BOD	40	20	100
	Suspended solids	40	20	100
	Fecal Coliform bacteria (No. per 100 mL)	400	200	100
Storm Sewer Outfall	Suspended solids	100	30	100
	Oil & Grease	40	20	100
	pH	6.5 – 8.5	–	100

Footnote:

(1) Results in mg/L except as noted.

TABLE 9 Radiation Dose Rates at Site Boundary

Location (1)	Dose Rate, mR/hr	
	Range	Average
BS1	0.006 - 0.012	0.009
BS2	0.008 - 0.012	0.010
BS3	0.008 - 0.010	0.009
BS4	0.006 - 0.010	0.009
BS5	0.006 - 0.011	0.008
BS6	0.010 - 0.018	0.015

Footnote:

(1) See Figure 4.

The maximum dose to an individual due to direct radiation from FMPC operations was calculated from the dose rate data in Table 10. An annual whole body dose of 8 mrem was obtained, assuming an occupancy factor of 80%.

River water is not used as a drinking water supply but it is possible for the residents to have an additional uranium intake if they consume a significant quantity of locally grown vegetables. The average concentration of uranium found in vegetables grown near the FMPC is 0.016 micrograms per gram wet weight. Assuming that a resident would consume an average of one-half pound per day of fresh or home-canned vegetables, an annual ingestion of 1.3 mg would result. The following 50-year dose commitments were calculated for this intake: total body, 0.04 mrems; bone, 0.7 mrems; kidney, 0.02 mrems; G.I. tract, 0.05 mrems.

Maximum dose to a population group. The community of Ross, Ohio, is located about 2.5 miles from the center of the production area. Because of distance and wind direction frequency, boundary station BS-3 is the sampling location which would give the best indication of contaminants moving toward Ross. Starting with the average concentrations found at BS-3, diffusion equation calculations give average uranium and thorium concentrations at Ross of 1.55×10^{-15} μCi/mL and 0.71×10^{-17} μCi/mL, respectively. Assuming a time occupancy factor of 80%, the following 50-year dose commitments were calculated for this population group: Lung, 1.0 mrem;

kidney, 0.5 mrem; bone, 0.3 mrem; total body, 0.03 mrem. Each of these doses is less than 1% of the applicable DOE radiation protection standard for the general population.

80-km man-rem dose. The total population within an 80-km radius of the FMPC is 2.5 million. See Table 10. The total 50-year whole body dose commitment due to airborne uranium and thorium for this group is 3.6 person-rem. For this same population group, whole body dose due to natural radiation is 200,000 person-rem per year.(7)

Summary of exposure data. Radiation exposures to the public due to FMPC activities were only a small fraction of the DOE radiation protection standards. A summary of pertinent exposure data is given in Table 11.

OTHER ENVIRONMENTAL CONTROLS

Sewage Plant effluent. Effluent from the FMPC Sewage Treatment Plant is combined with other effluents at MH-175 (see Figure 3). Prior to discharge from the Sewage Treatment Plant, however, the effluent is carefully monitored and sampled to determine efficiency of operation and compliance with all applicable standards. The comparison in Table 12 shows that FMPC sewage treatment effluent far surpasses the requirements, in all parameters, of the federal EPA secondary treatment regulations (40 CFR 133.102).

TABLE 10 Population Distribution within 80-km (50 mi) of the FMPC

Compass Segment	Estimated Population (1)			
	0-8 km (0-5 mi)	8-16 km (5-10 mi)	16-32 km (10-20 mi)	32-80 km (20-50 mi)
0 - 45°	600	29,000	41,000	667,000
45° - 90°	2,500	42,000	25,000	176,000
90° - 135°	1,900	59,000	351,000	212,000
135° - 180°	2,100	31,000	326,000	217,000
180° - 225°	1,100	18,000	27,000	42,000
225° - 270°	2,100	10,000	2,500	40,000
270° - 315°	800	6,000	2,800	63,000
315° - 360°	1,200	6,000	25,000	104,000
Totals	12,360	201,000	800,300	1,521,000
Total in all segments: 2,534,660				

Footnote:

(1) Based on 1970 census.

TABLE 11 Summary of 1979 Exposure Data

Type of Exposure	Dose Estimate	% of Standard	Radiation Protection Standard (1)
"Maximum potential" dose due to direct radiation from FMPC operations.	0.052 Rem	10	0.5 Rem
"Maximum indiviual" whole-body dose due to direct radiation from FMPC operations.	0.008 Rem	1.6	0.5 Rem
"Population group" 50-year whole-body dose commitment from airborne uranium and thorium.	0.00003 Rem	0.02	0.17 Rem
"80-km" 50-year whole-body dose commitment from airborne uranium and thorium.	3.6 person-Rem	–	–

Footnote:

(1) DOE Manual Chapter 0524, Part III, Individuals and Population Groups in Uncontrolled Areas.

TABLE 12 Sewage Treatment Plant Data, 1979

Parameter	EPA Standard	FMPC Data
Suspended Solids		
30-day average	≤ 30 mg/L	1-7 mg/L (1)
Maximum in any 7 days	≤ 45 mg/L	12 mg/L (2)
Solids reduction achieved	≥ 85%	90% (3)
B.O.D. (5-day)		
30-day average	≤ 30 mg/L	< 1-9 mg/L (1)
Maximum in any 7 days	≤ 45 mg/L	12 mg/L (2)
B.O.D. reduction achieved	≥ 85%	94% (3)
Fecal Coliform		
30-day average	≤ 200 per 100 mL	< 1-30 per 100 mL (1)
Maximum in any 7 days	≤ 400 per 100 mL	200 per 100 mL (2)
pH	6.0 – 9.0	6.2 – 8.8 (4)

Footnotes:

(1) Range of monthly averages for the year.

(2) Maximum 7-day concentration.

(3) Reduction determined from analysis of Sewage Treatment Plant influent and effluent samples.

(4) Range of daily pH measurements.

Steam Plant emissions. The steam generation plant at FMPC consists of four boilers with a total design capacity of 300,000 lbs. of steam per hour. Only two boilers will be needed for projected future operations and during 1978 work began on the installation of electrostatic precipitators for these two units. The precipitators became operational in January, 1979. Compliance testing has been done and results show the stack discharge now meets the Ohio EPA particulate limit of 0.13 pounds per million BTU input.

Sulfur dioxide emission limits for stationary facilities have been proposed by the Ohio Environmental Protection Agency. Under these proposed rules, the limit for the FMPC steam plant would be 2.0 pounds of sulfur dioxide per million BTU input from each boiler. This limit is equivalent to the use of coal containing 1.3% sulfur. Coal containing only 1% sulfur, or less, is purchased in order to meet the State's proposed SO_2 emission requirement.

Particulates from industrial processes. Maximum rates of emissions of particulates from industrial processes are prescribed in State of Ohio EPA Regulation 3745-17-11, "Restriction of emission of particulate matter from industrial processes." Through the use of many dust collectors, scrubbers, electrostatic precipitators, and other types of air cleaning equipment, particulate emissions from FMPC process operations are far below the established limits. No problems are anticipated in remaining in compliance with the State standard.

Incinerator operations. The FMPC incinerator used throughout 1979 was replaced with a new unit in January, 1980. The old incinerator, in use for over two decades, could not meet the State of Ohio discharge limit of 0.10 pound of particulate matter per 100 pounds of combustible refuse charged. Arrangements have been made to have a consulting firm do compliance testing of the new unit.

REFERENCES

(1) U.S. Department of Energy, Manual Chapter 0524, Standards For Radiation Protection. March 30, 1977.

(2) U.S. Department of Energy, Manual Chapter 0513, Effluent and Environmental Monitoring and Reporting. March 20, 1974.

(3) Ohio Environmental Protection Agency, Ambient Air Quality Standards.

(4) Ohio Environmental Protection Agency, Water Quality Standards, Administrative Code Chapter 3745-1, effective February 14, 1978.

(5) U.S. ERDA Report ORNL-4992, A Methodology for Calculating Radiation Doses from Radioactivity Released to the Environment, G. G. Killough and L. R. McKay. March, 1976.

(6) U.S. AEC Report, Meteorology And Atomic Energy - 1968, D. H. Slade, ed. July, 1968.

(7) U.S. Environmental Protection Agency, ORP/SID 72-1, Natural Radiation Exposure In The United States, D. T. Oakley, June, 1972.

FEED MATERIALS PRODUCTION CENTER
ENVIRONMENTAL MONITORING REPORT
FOR 1979

EXTERNAL DISTRIBUTION LIST

Federal Activities Coordinator, U.S. EPA, Region v

Director, State of Ohio, Department of Health

Planning Director, Ohio River Basin Commission

Commissioner of Health, City of Cincinnati

Health Commissioner, County of Hamilton, Board of Health

Atomic Energy Coordinator, State of Ohio, Development Department

Director, State of Ohio Environmental Protection Agency

Southwest District Office, State of Ohio Environmental Protection Agency

Crosby Township Board of Trustees, New Haven, Ohio

Ross Township Board of Trustees, Ross, Ohio