48

G-000-106.39

FEED MATERIALS PRODUCTION CENTER ENVIRONMENTAL MONITORING ANNUAL REPORT FOR 1981

05/01/82

NLCO-1180
NLO/DOE
36
REPORT

G-000-106.39
G-000-0048
48

Special
UC-41

FEED MATERIALS PRODUCTION CENTER

ENVIRONMENTAL MONITORING ANNUAL REPORT

FOR 1981

By

D. A. Fleming, M. W. Boback, and K. N. Ross

May 1, 1982

NLO, Inc.
P. O. Box 39158
Cincinnati, Ohio 45239

Prepared for:

U. S. Department of Energy
Weapons Division of Oak Ridge Operations
Contract DE-AC05-76OR01156

Approved:

M. W. Boback

M. W. Boback, Director
Health & Safety Division

Approved:

R. M. Spenceley

R. M. Spenceley
Manager

PROPERTY OF
U.S. DEPT. OF ENERGY
REFERENCE MATERIAL

DO NOT REMOVE

CONTENTS

	Page
Summary	1
Introduction	1
Area Features	3
Environmental Standards	5
Sample Collection and Analysis	6
Monitoring Data	13
NPDES Permit	23
Estimation of Radiation Dose	23
Other Environmental Controls	28
References	32
Distribution List (External)	33

FIGURES

1	Area Map	2
2	Feed Materials Production Center Environmental Features	7
3	Liquid Waste Streams	9
4	FMPC and Surrounding Area	10

TABLES

Table		Page
1	Radioactive Contaminants in Air	14
2	Radon-222 in Air	16
3	Airborne Particulates	16
4	Radioactive Contaminants in Water	18
5	Radionuclides Discharged Via Sampling Point W2	19
6	Non-Radioactive Contaminants in Water	21
7	Uranium in Soil	22
8	Uranium in Miami River Sediment	22
9	NPDES Summary	24
10	Radiation Dose Rates at Site Boundary	26
11	Population Distribution Within 80-km (50 mi.) of the FMPC	29
12	Summary of Exposure Data	29

48

SUMMARY

This report contains environmental monitoring data collected at the Feed Materials Production Center (FMPC) during 1981. These data show that the discharges of radioactive contaminants from FMPC operations were only a small fraction of the Department of Energy guide levels published in DOE Order 5480.1A.[1] The resulting offsite radiation exposures would, therefore, be a small fraction of the standards for uncontrolled areas.

Concentrations of environmentally important nonradioactive contaminants in water and air are also reported. Results show that FMPC operations did not cause State standards for these contaminants to be exceeded.

INTRODUCTION

The Feed Materials Production Center (FMPC) is an industrial facility owned by the United States Department of Energy (DOE) and operated by NLO, Inc. The facility is located on a 1050-acre site about 20 miles northwest of downtown Cincinnati, Ohio. Several rural communities are 1-3 miles away. Figure 1 is a map of the area.

The primary work at the FMPC is the production of purified uranium metal and compounds for use at other DOE sites. In regard to uranium-235 content, the uranium may be depleted, normal, or slightly enriched. The average content is close to normal.

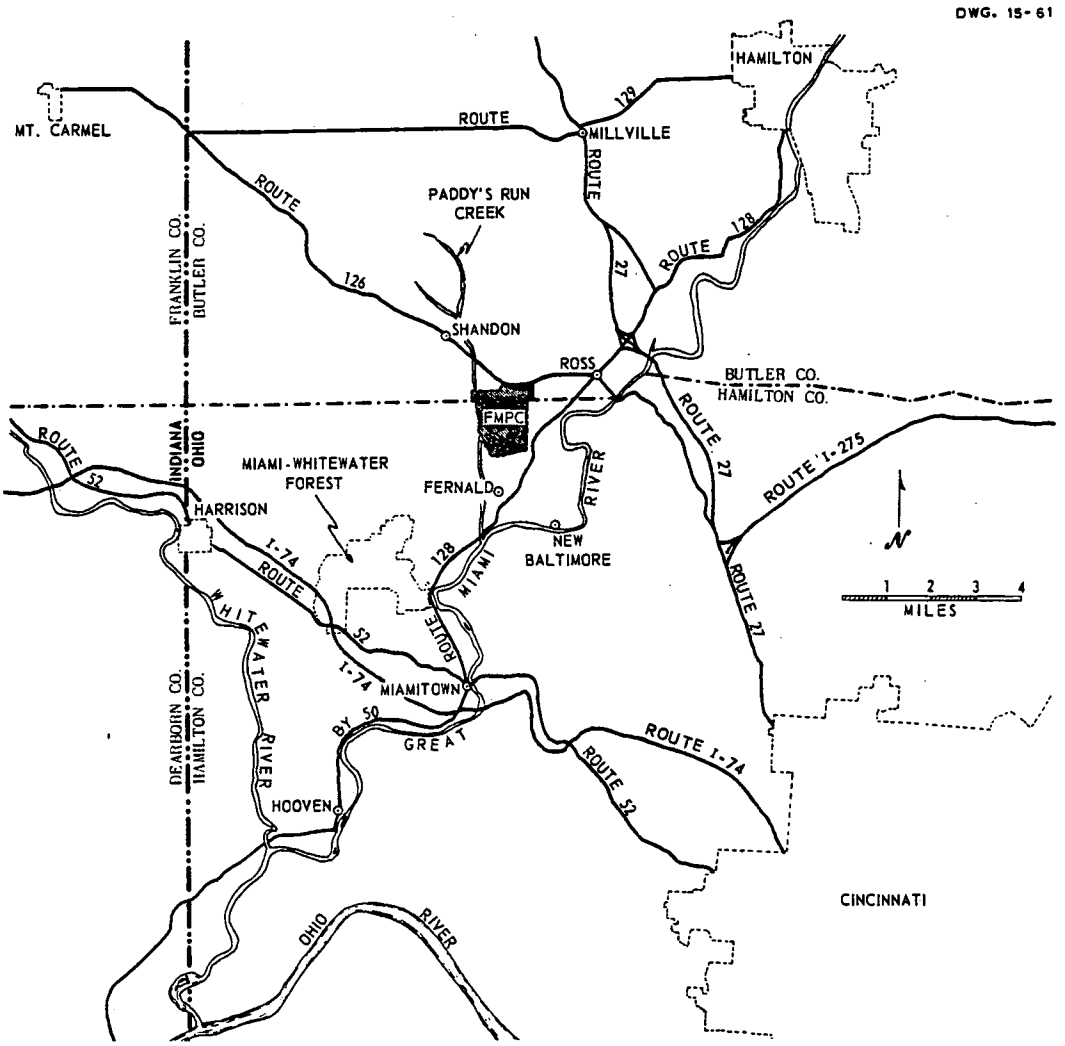

FIGURE 1 Area Map

Uranium production may begin with ore concentrates, recycled uranium from spent reactor fuel, or with various uranium compounds. Impure starting material is dissolved in nitric acid and the uranium is extracted into an organic liquid and then back-extracted into dilute nitric acid to yield a solution of uranyl nitrate.

Evaporation and heating convert the nitrate solution to uranium trioxide (UO_3) powder. This compound is reduced to uranium dioxide (UO_2) with hydrogen and then converted to uranium tetrafluoride (UF_4) by reaction with anhydrous hydrogen fluoride. Uranium metal is produced by reacting UF_4 and magnesium metal in a refractory-lined reduction vessel. This primary uranium metal is then remelted with scrap uranium metal to yield a purified uranium ingot which is extruded to form rods or tubes. Sections are then cut and machined to final dimensions. These machined cores are shipped to other DOE sites for canning and final assembly into reactor fuel elements.

Periodically, small amounts of thorium are processed. Thorium production steps, in general, are similar to those followed in uranium production. Final products may be purified thorium nitrate solution, solid thorium compounds, or metal.

AREA FEATURES

Glacial action during the time of the Illinoian and Wisconsinan ice sheets gave the area its basic geological features. In the FMPC area, outwash from retreating glaciers filled in the wide valley of a large

ancient river. Through this fill, the Miami River has cut its present course and the river bed is now located about 60 feet below the original surface level of the glacial deposits. Underlying the FMPC is about 50 feet of clay-rich till which may be a remnant of a large glacial moraine. Beneath the till is about 150 feet of sand and gravel which fills the buried valley of the pre-glacier river. In the FMPC area, that ancient valley is about three miles wide.

The area east of the FMPC, in the Miami River flood plain, has fertile soil and is reported to contain some of the best farm land in the State. In the gently rolling uplands west of the flood plain, the thin soil mantle over the glacial drift is less fertile.

Although there are several small industries nearby, the major economic activities in this rural area are farming, dairying, and the raising of beef cattle. Farm crops include sweet corn, field corn, soybeans and wheat. Truck crops are widely grown and sold at local produce stands and in nearby urban markets.

The glacial till and the Miami River have provided two other important area products - groundwater and gravel. A company located about one mile from the FMPC pumps out about 20 million gallons of groundwater per day, chiefly for industries in and near Cincinnati. Pumping began just before the FMPC was built. The permeable glacial deposits, called valley-train, house the bountiful deep aquifer from which the water company and the FMPC draw supplies. The Miami River continuously provides part of the aquifer recharge.

Gravel pit operations are a familiar sight in the Miami Valley. Some operations are located along the river, with a sand dike separating gravel washwater from the river. Other operations are within the flood plain, but are several hundred feet from the river.

Upstream from the FMPC the river receives substantial amounts of industrial and municipal wastes. The cities of Dayton, Middletown, Hamilton, and Fairfield are major contributors. Little recreational use is made of the river. Downstream from the FMPC the population is sparse and industries are small and scattered. About 18 miles away, the Miami meets the Ohio River.

In 1981, total precipitation at the FMPC was 34 inches, measured as water. Monthly maximum and minimum values were 4.6 inches during April and 0.2 inch during January.

ENVIRONMENTAL STANDARDS

There are several sets of standards which can be applied to environmental samples collected in connection with FMPC operations. These standards have been set by DOE and the State of Ohio Environmental Protection Agency (OEPA).

DOE standards for radiation protection and environmental monitoring must be met by contract operators such as NLO, Inc. ([1,2]) Concentration Guides for radionuclides are established separately for air and water in work areas and in areas outside of DOE control. For environmental

monitoring purposes, DOE criteria for air and water in uncontrolled areas are used as standards. At the FMPC, criteria for offsite or ambient air are applied to samples collected at the plant boundary. Criteria for offsite water are applied to stream and river samples collected downstream from the point where plant effluent is discharged, but upstream from any known use of the water as a drinking water supply.

Criteria used for nonradioactive contaminants in ambient air, the Great Miami River, and Paddy's Run are taken from standards adopted by the Ohio EPA.([3,4]) In rivers and streams of the State of Ohio, water quality standards apply beyond a mixing zone permitted for industrial and municipal effluents.

SAMPLE COLLECTION AND ANALYSIS

Air. Conversion of impure uranium and thorium compounds to reactor-grade feed materials involves operations which generate radioactive particulates and reaction products in an air stream. Ventilation and air cleaning systems are used to confine this air and remove airborne contaminants, including valuable material which is returned to the production processes. The filtered or scrubbed air is exhausted to the atmosphere. Sampling of these stack exhausts is maintained on a continuous schedule to determine the operating condition of the air cleaning systems.

Samples of particulate matter in air are continuously collected at permanent sampling stations located on the project's outer boundary (see Figure 2). Seven stations were operated during 1981. At each boundary station, air is drawn at a rate of about one cubic meter per minute

FIGURE 2
FEED MATERIALS PRODUCTION CENTER
ENVIRONMENTAL FEATURES

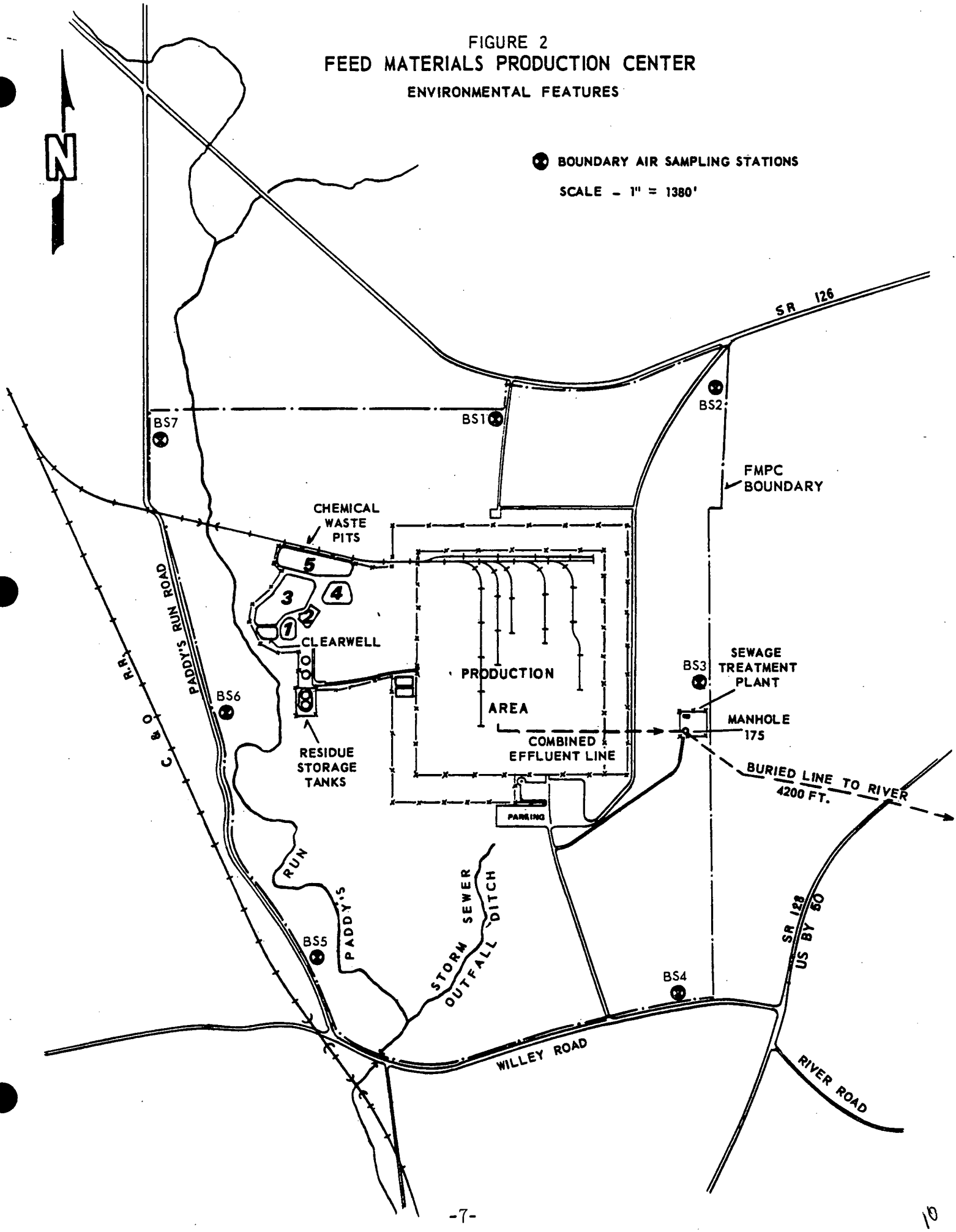

through an 8 inch x 10 inch filter which is changed weekly. Filters are weighed before use and then reweighed after changing to obtain the weight of collected dust. After reweighing, the filter and its collection of dust are dissolved in acid and the solutions are analyzed for uranium and alpha and beta radioactivity. Counting is done about seven days after the end of the collection period. After these analyses are completed, the remaining solution is held to provide a long-term composite for thorium analyses. Frequent thorium analyses are not considered necessary because of the small amount of thorium processed and the low concentration of thorium found in the boundary samples.

Water. Each of the individual production plants on the project has sumps and equipment for the collection and initial treatment of process waste water. Uranium and thorium may be recovered as part of the treatment. Effluents from the plants are collected at a central facility, called the General Sump, for additional treatment. The treated wastes are allowed to settle and clear or are discharged into a large pit where the solids settle to the bottom. Clear supernatant from the settling tank and clear effluent from the pit are combined with the other water streams and discharged to the Great Miami River. See Figure 3 for a diagram of the process.

Water sampling locations are shown in Figure 4. At the final access point on the plant effluent line, W2, a Parshall Flume type water sampler continuously collects a sample which is proportional to the total flow. Twenty-four hour samples collected daily from this point are analyzed for uranium, alpha and beta radioactivity, and pH. Analyses for chloride, fluoride and nitrate are done on one sample each week. One-month

DWG 11-70

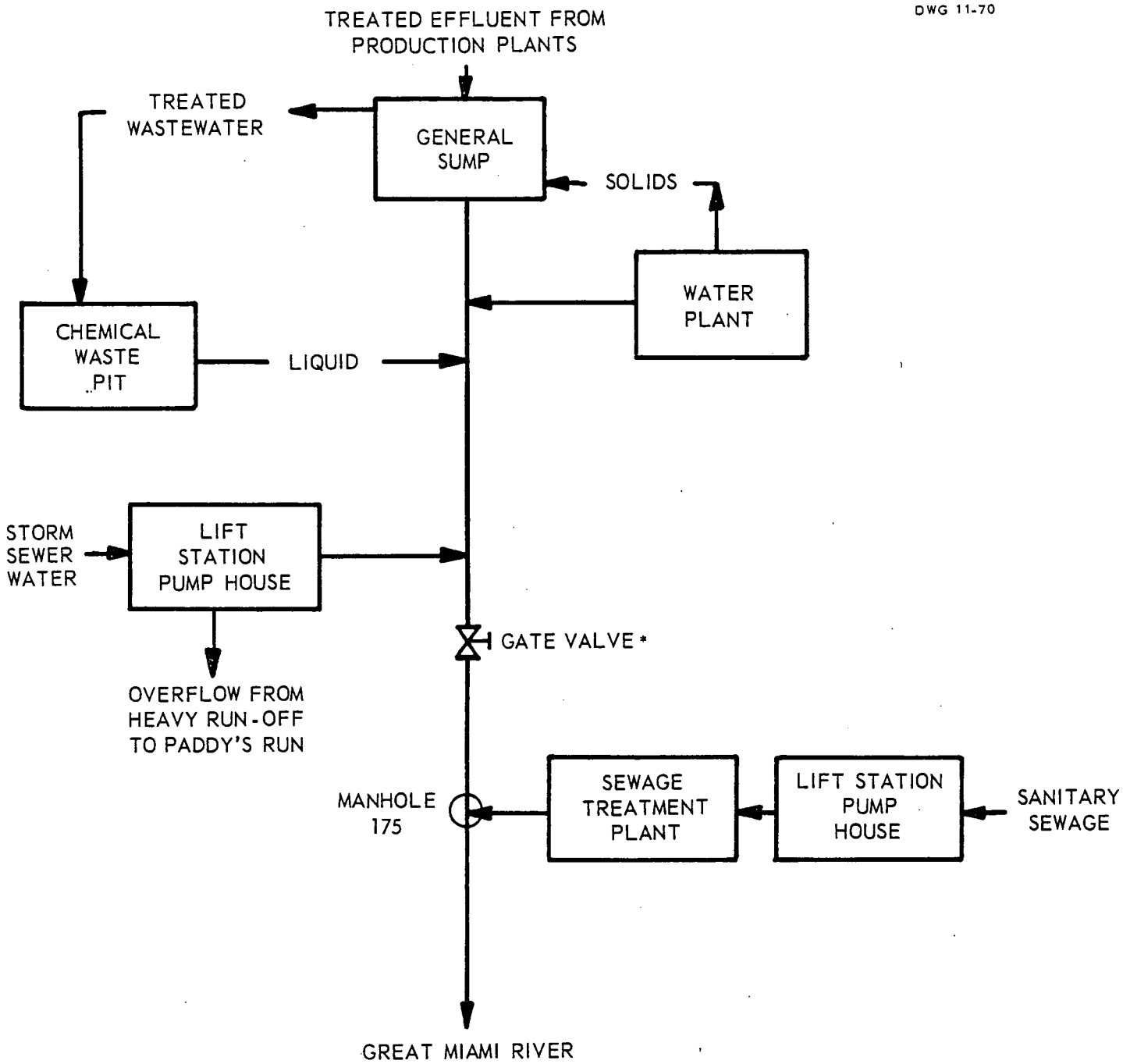

**Storm sewer water can be diverted to the Chemical Waste Pit or the General Sump by first halting the pumping from both locations and then closing the gate valve.*

FIGURE 3 Liquid Waste Streams

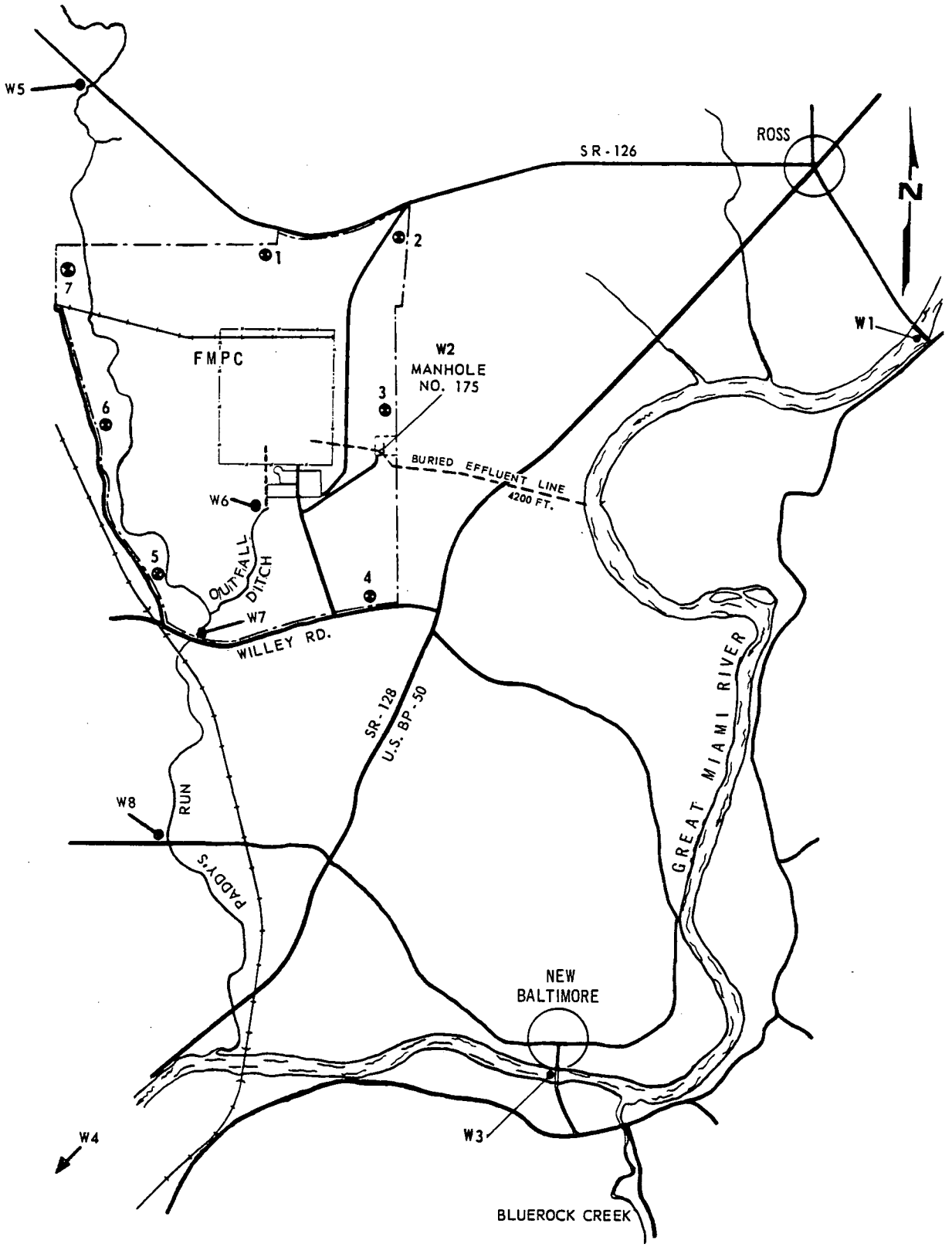

W4 is located at Miamitown, 4.7 miles from Paddy's Run.

FIGURE 4 FMPC and Surrounding Area

⊗ BOUNDARY AIR SAMPLING STATIONS.

W1-W8 - WATER SAMPLING LOCATIONS

SCALE: 1" = 3055'

composites of the daily samples are analyzed for radium-226, radium-228, and thorium. Long-term composites are analyzed for other radionuclides of interest.

From sampling point W2 the plant effluent is discharged to the Great Miami River through a buried pipeline.

In Figure 4, the river sampling points are identified as W1, W3, and W4. At W1, upstream from the effluent discharge, a daily grab sample is collected. At point W3, downstream on the river from the effluent discharge, a daily grab sample is collected. Point W4 is at Miamitown, 4.7 miles downstream from the mouth of Paddy's Run. Grab samples are collected weekly at this point.

Paddy's Run is a small stream which flows along the site's west edge and joins the Miami River about two miles away from the FMPC boundary. During periods of heavy runoff, excess water in the storm sewer system overflows at sampling point W6 to a natural drainage ditch which discharges into Paddy's Run. Under normal conditions, all water reaching the storm sewer lift station is pumped to the line which leads to the Miami River (see Figure 3). It is unlikely that the intermittent flow of storm water would have any effect on river water quality since it contains no process waste discharges.

At least one sample per week from each of the three river sampling points is analyzed for uranium, alpha and beta radioactivity, chloride, fluoride, nitrate, non-filterable solids, and pH. Monthly composites from each location are analyzed for radium-226 and radium-228.

Paddy's Run sampling locations are shown in Figure 4 as W5, W7, and W8. Grab samples are collected once each week at W5 and W7. A sample is collected at W8 if there is no flow at W7. These samples are analyzed for uranium, alpha and beta radioactivity and pH weekly. Chloride, fluoride and nitrate analyses are performed on monthly composites. Radium analyses are performed on bi-monthly composites of samples collected at sampling point W5 and, when available, on monthly composites of samples from location W7.

Soil and River Sediment. Once each year, soil samples are collected near the boundary sampling stations. Each sample consists of six cores, 2 cm diameter and 10 cm deep. The cores are taken about 1.5 meters apart. These samples are analyzed for uranium to observe the possible contribution from stack effluents.

Sediment samples were collected from the banks of the Miami River and analyzed for uranium to determine if material was accumulating below the site outfall. Sediment from the river bank, near the water line, was collected by scraping up the top two inches.

Quality Assurance. Quality assurance is an integral part of the overall environmental monitoring effort. Included among the various interlaboratory quality assurance practices are daily calibrations of instrumentation and routine analyses of blanks, standard solutions and spiked sample aliquots. The values obtained from these analyses have been within the ranges which indicate the analytical systems are under control and the results being obtained are reliable. Uranium control samples provided by another onsite analytical laboratory are analyzed daily as part of the intralaboratory quality assurance activities. The

values which have been obtained for these daily control samples show that the procedure used for uranium analyses produces reliable data. NLO also participates in the DOE quality assurance program which is conducted by the DOE Environmental Measurements Laboratory (EML). In this program, laboratories receive samples of various media for analysis. Results are reported to EML for comparison with established values. During 1981 water, soil, and air filter samples were analyzed for uranium and water samples were analyzed for chloride and nitrate. The average of the ratio of NLO results to the EML values for these analyses was 1.06.

Quality control samples provided by the U. S. Environmental Protection Agency's Environmental Monitoring and Support Laboratory, Cincinnati, Ohio, are also analyzed as part of the quality assurance program. Samples have been analyzed for pH, non-filterable residue, nitrate nitrogen, chloride, fluoride, and sulfate. Results obtained by NLO have all been within the guidelines recommended by EPA.

MONITORING DATA

Environmental data collected during 1981 are given in the accompanying tables. Comparisons are made with the applicable standard for each significant contaminant. Confidence limits given in the tables are derived from analytical variations or from the statistical error inherent in radioactivity determinations.

Data in Table 1 show that average airborne uranium and thorium concentrations at the boundary sampling stations were no greater than 0.3% of the standard for offsite areas. It is concluded from these data that any offsite radiation exposure resulting from FMPC airborne contaminants would

TABLE 1 Radioactive Contaminants in Air

Contaminant	Sampling Point (1)	Number of Samples	Maximum Conc. Found		Minimum Conc. Found		Average Concentration				Detection Level	Standard
			$\mu g/m^3$	$\mu Ci/mL$	$\mu g/m^3$	$\mu Ci/mL$	$\mu g/m^3$	$\mu Ci/mL$	% of Standard	95 % Confidence Level		
Uranium	BS1	52	0.081	2.7×10^{-14}	0.0011	3.5×10^{-16}	0.012	4.1×10^{-15}	0.2	$\pm 1 \times 10^{-15}$ $\mu Ci/mL$	5×10^{-17} $\mu Ci/mL$	2×10^{-12} $\mu Ci/mL$ (2)
	BS2	52	0.183	6.1×10^{-14}	0.0008	2.7×10^{-16}	0.013	4.2×10^{-15}	0.2			
	BS3	51	0.057	1.9×10^{-14}	0.0009	3.1×10^{-16}	0.016	5.3×10^{-15}	0.3			
	BS4	52	0.084	2.8×10^{-14}	0.0004	1.4×10^{-16}	0.005	1.8×10^{-15}	0.1			
	BS5	52	0.033	1.1×10^{-14}	0.0006	2.1×10^{-16}	0.007	2.6×10^{-15}	0.1			
	BS6	52	0.036	1.2×10^{-14}	0.0004	1.4×10^{-16}	0.007	2.4×10^{-15}	0.1			
	BS7	50	0.022	7.3×10^{-15}	0.0002	6.0×10^{-17}	0.004	1.3×10^{-15}	0.1			
Thorium	BS1	1 (3)	NA (4)	NA	NA	NA	3×10^{-5}	3.3×10^{-18}	0.0003	$\pm 2 \times 10^{-18}$ $\mu Ci/mL$	2×10^{-18} $\mu Ci/mL$	1×10^{-12} $\mu Ci/mL$ (5)
	BS2	1					4×10^{-5}	4.4×10^{-18}	0.0004			
	BS3	1					6×10^{-5}	6.7×10^{-18}	0.0007			
	BS4	1					3×10^{-5}	3.3×10^{-18}	0.0003			
	BS5	1					2×10^{-5}	2.2×10^{-18}	0.0002			
	BS6	1					5×10^{-5}	5.6×10^{-18}	0.0006			
	BS7	1					3×10^{-5}	3.3×10^{-18}	0.0003			
Gross Alpha	BS1	52	NA	2.2×10^{-14}	NA	5.3×10^{-16}	NA	3.8×10^{-15}	0.2	$\pm 1 \times 10^{-15}$ $\mu Ci/mL$	1×10^{-16} $\mu Ci/mL$	2×10^{-12} $\mu Ci/mL$ (2)
	BS2	52		6.4×10^{-14}		2.2×10^{-16}		4.2×10^{-15}	0.2			
	BS3	51		2.0×10^{-14}		3.9×10^{-16}		5.1×10^{-15}	0.3			
	BS4	52		2.2×10^{-14}		3.0×10^{-16}		1.8×10^{-15}	0.1			
	BS5	52		1.1×10^{-14}		2.2×10^{-16}		2.7×10^{-15}	0.1			
	BS6	52		1.0×10^{-14}		1.8×10^{-16}		2.4×10^{-15}	0.1			
	BS7	50		7.0×10^{-15}		4.0×10^{-17}		1.3×10^{-15}	0.1			
Gross Beta	BS1	52	NA	2.8×10^{-13}	NA	1.9×10^{-14}	NA	7.9×10^{-14}	0.08	$\pm 6 \times 10^{-15}$ $\mu Ci/mL$	1×10^{-16} $\mu Ci/mL$	1×10^{-10} $\mu Ci/mL$ (6)
	BS2	52		2.3×10^{-13}		1.7×10^{-14}		7.7×10^{-14}	0.08			
	BS3	51		2.2×10^{-13}		2.4×10^{-14}		7.6×10^{-14}	0.08			
	BS4	51		1.9×10^{-13}		1.8×10^{-14}		6.5×10^{-14}	0.07			
	BS5	52		3.1×10^{-13}		1.8×10^{-14}		8.6×10^{-14}	0.09			
	BS6	52		1.8×10^{-13}		1.7×10^{-14}		6.2×10^{-14}	0.06			
	BS7	50		1.7×10^{-13}		1.5×10^{-14}		5.2×10^{-14}	0.05			

Footnotes:

(1) See sampling locations shown in Figure 2.

(2) DOE Order 5480.1A, Attachment XI-1, Table II, Concentration Guide for Natural Uranium.

(3) Each sample is a composite of 50-52 weekly samples.

(4) Not applicable.

(5) DOE Order 5480.1A, Attachment XI-1, Table II, Concentration Guide for Natural Thorium.

(6) DOE Order 5480.1A, Attachment XI-1, Table II, Note 3, Concentration Guides for Mixtures of Unidentified Radionuclides.

be a small fraction of the standards given in Reference 1.

According to stack monitoring data, the total amount of uranium released to the atmosphere during 1981 was 0.113 Curie.

A commercial service was employed to monitor for radon-222 at the site boundary during 1981. Patented radon monitoring devices were deployed at the Boundary Stations for periods of approximately three months. Two offsite locations were also monitored to obtain information about the level of naturally-occurring radon in the general area. After exposure, the devices were returned to the commercial service for analysis. The data obtained are presented in Table 2. No independent analyses for verification of the data have been performed. The average concentrations at the Boundary Stations ranged from 0.28 picocuries per liter (pCi/L) to 0.70 pCi/L, well under the DOE Concentration Guide of 3 pCi/L for radon in uncontrolled areas. A comparison of the average onsite data with offsite data shows no observable difference between radon levels at the FMPC site boundary and radon levels measured at locations five to eight miles distant from the site.

Particulate matter concentrations found at the boundary are given in Table 3. At all locations the average concentration of particulate matter did not exceed the OEPA limit for the annual arithmetic mean. The FMPC contribution to ambient air particulate matter cannot be assessed from these data. Except for BS-3, all boundary stations are located near roads where traffic dust is generated. Also, BS-4, BS-5, and BS-6 are located near agricultural lands, and periodic farming activities cause high dust levels.

TABLE 2 Radon-222 In Air

Location	Number of Samples	Concentration Range		Average Concentration		Standard (2)
		Maximum pCi/L	Minimum pCi/L	pCi/L	% of Standard	
Onsite (1)						
BS1	4	0.94	0.11	0.58	19	
BS2	4	1.35	0.17	0.61	20	
BS3	3	0.60	0.13	0.42	14	
BS4	4	0.66	0.05	0.34	11	
BS5	3	0.40	0.08	0.28	9	3 pCi/L
BS6	4	0.80	0.34	0.57	19	
BS7	3	1.07	0.30	0.70	23	
Offsite						
8 mi., ENE	3	0.80	0.60	0.67	22	
5 mi., WNW	1	NA	NA	0.36	12	

Footnotes:

(1) See sampling locations shown in Figure 2.

(2) DOE Order 5480.1A, Attachment XI-1, Table II, Concentration Guide for Radon-222.

TABLE 3 Airborne Particulates

Sampling Point (1)	Number of Samples	Concentration Range		Average Concentration			Detection Level	Standard (2)
		Maximum $\mu g/m^3$	Minimum $\mu g/m^3$	$\mu g/m^3$	% of Standard	95% Confidence Level		
BS1	52	101	24	40	53			
BS2	52	84	23	44	59			
BS3	51	65	19	37	49			
BS4	52	143	22	49	65	±5%	$1 \mu g/m^3$	$75 \mu g/m^3$
BS5	51	102	25	56	75			
BS6	51	75	25	43	57			
BS7	50	70	22	39	52			

Footnotes:

(1) See sampling locations shown in Figure 2.

(2) State of Ohio Ambient Air Quality Standard.

Table 4 contains information on uranium, radium-226, radium-228, and alpha and beta radioactivity in the Great Miami River. There is no significant difference between the upstream and downstream concentrations of radium and uranium. All concentrations are well within the DOE guides for water in uncontrolled areas.

Uranium, radium-226 and radium-228 data for Paddy's Run are also given in Table 4. At the downstream sampling points the average uranium, radium-226, and radium-228 concentrations were less than 2% of the DOE guides for uncontrolled areas. Average concentrations of gross alpha and beta radioactivity were within the DOE limits for unidentified emitters.

Information given in Table 5 shows the total quantity of 11 radionuclides discharged during 1981 and the average concentrations in the plant effluent as measured at the final onsite access point, W2. The average concentrations are all below the DOE limits for water in uncontrolled areas. Analysis of the plant effluent provides basic information for assessing the adequacy of waste treatment efforts and the control of contaminant releases. It is much easier to get continuous representative samples of the effluent than of the river and radionuclides can generally be determined with greater reliability in effluent samples than by analysis of river samples after the radionuclides have undergone a large dilution.

During 1981, the average flow of plant effluent was 0.412 million gallons per day. The average river flow was 2130 million gallons per day, which means that on an average basis, each gallon of FMPC effluent mixed with 5170 gallons of river water. At this volume ratio, uranium, radium-226 and radium-228 from the FMPC would have amounted to less than

TABLE 4 Radioactive Contaminants in Water

Contaminant	Sampling Point (1)	Number of Samples	Max. Conc. Found		Min. Conc. Found		Average Concentration Found				Detection Level µCi/mL	Standard
			mg/L	µCi/mL	mg/L	µCi/mL	mg/L	µCi/mL	% of Standard	95 % Confidence Limits (2)		
Uranium	W1	52	0.007	2.4×10^{-9}	<0.003	$<1.0 \times 10^{-9}$	0.004	$<1.4 \times 10^{-9}$	<0.23	$\pm 0.7 \times 10^{-9}$ µCi/mL	1×10^{-9}	6×10^{-7} (5)
	W3	52	0.009	3.0×10^{-9}	<0.003	$<1.0 \times 10^{-9}$	0.004	$<1.4 \times 10^{-9}$	<0.23			
	W4	52	0.008	2.7×10^{-9}	<0.003	$<1.0 \times 10^{-9}$	0.004	$<1.4 \times 10^{-9}$	<0.23			
	W5	52	0.017	5.7×10^{-9}	<0.003	$<1.0 \times 10^{-9}$	0.004	$<1.4 \times 10^{-9}$	<0.23			
	W7	28	0.400	1.4×10^{-7}	<0.003	$<1.0 \times 10^{-9}$	0.031	$<1.0 \times 10^{-8}$	<1.67			
	W8	24	0.068	2.3×10^{-8}	<0.003	$<1.0 \times 10^{-9}$	0.012	$<4.1 \times 10^{-9}$	<0.68			
Radium - 226	W1 (3)	12	NA(4)	4.5×10^{-10}	NA	$<4.5 \times 10^{-10}$	NA	$<4.5 \times 10^{-10}$	<1.5	$\pm 4.5 \times 10^{-10}$ µCi/mL	4.5×10^{-10}	3×10^{-8} (5)
	W3	12		9.0×10^{-10}		$<4.5 \times 10^{-10}$		$<4.5 \times 10^{-10}$	<1.5			
	W4	12		4.5×10^{-10}		$<4.5 \times 10^{-10}$		$<4.5 \times 10^{-10}$	<1.5			
	W5	6		$<4.5 \times 10^{-10}$		$<4.5 \times 10^{-10}$		$<4.5 \times 10^{-10}$	<1.5			
	W7	10		4.5×10^{-10}		$<4.5 \times 10^{-10}$		$<4.5 \times 10^{-10}$	<1.5			
Radium - 228	W1(3)	12	NA	4.5×10^{-10}	NA	$<4.5 \times 10^{-10}$	NA	$<4.5 \times 10^{-10}$	<1.5	$\pm 4.5 \times 10^{-10}$ µCi/mL	4.5×10^{-10}	3×10^{-8} (5)
	W3	12		2.3×10^{-9}		$<4.5 \times 10^{-10}$		$<9.0 \times 10^{-10}$	<3.0			
	W4	12		4.5×10^{-10}		$<4.5 \times 10^{-10}$		$<4.5 \times 10^{-10}$	<1.5			
	W5	6		4.5×10^{-10}		$<4.5 \times 10^{-10}$		$<4.5 \times 10^{-10}$	<1.5			
	W7	10		9.0×10^{-10}		$<4.5 \times 10^{-10}$		$<4.5 \times 10^{-10}$	<1.5			
Gross Alpha	W1	52	NA	4.5×10^{-9}	NA	$<9.0 \times 10^{-10}$	NA	$<2.3 \times 10^{-9}$	<7.7	$\pm 8.0 \times 10^{-10}$ µCi/mL	9.0×10^{-10}	3×10^{-8} (6)
	W3	52		4.5×10^{-9}		$<9.0 \times 10^{-10}$		$<1.4 \times 10^{-9}$	<4.7			
	W4	52		4.5×10^{-9}		$<9.0 \times 10^{-10}$		$<2.3 \times 10^{-9}$	<7.7			
	W5	52		8.1×10^{-9}		$<9.0 \times 10^{-10}$		$<2.3 \times 10^{-9}$	<7.7			
	W7	28		2.3×10^{-7}		$<9.0 \times 10^{-10}$		$<1.6 \times 10^{-8}$	<53			
	W8	24		3.7×10^{-8}		$<9.0 \times 10^{-10}$		$<6.3 \times 10^{-9}$	<21			
Gross Beta	W1	52	NA	2.2×10^{-8}	NA	4.5×10^{-9}	NA	9.0×10^{-9}	30	$\pm 3.0 \times 10^{-9}$ µCi/mL	4.5×10^{-9}	3×10^{-8} (6)
	W3	52		2.2×10^{-8}		4.5×10^{-9}		9.0×10^{-9}	30			
	W4	52		3.2×10^{-8}		4.5×10^{-9}		9.0×10^{-9}	30			
	W5	52		2.2×10^{-8}		4.5×10^{-9}		9.0×10^{-9}	30			
	W7	28		3.2×10^{-8}		4.5×10^{-9}		9.0×10^{-9}	30			
	W8	24		3.6×10^{-8}		4.5×10^{-9}		1.4×10^{-8}	47			

Footnotes:

(1) See sampling locations shown in Figure 4.

(2) Confidence limits are given for the average concentration.

(3) Each sample was a one-month composite of daily samples (W1 and W3), of samples collected once each week (W4), or composite of 3-8 weekly samples.

(4) Not applicable.

(5) DOE Order 5480.1A, Attachment XI-1, Table II, Concentration Guides for natural uranium, radium-226 and radium-228.

(6) DOE Order 5480.1A, Attachment XI-1, Note 2, Concentration Guides for mixtures of unidentified radionuclides.

TABLE 5 Radionuclides Discharged Via Sampling Point W2 (1)

Radionuclide	Total Curies	Average Conc. Found		Standard (2) µCi/mL
		µCi/mL	% of Standard	
Cesium-137	2.3×10^{-3}	4.0×10^{-9}	0.02	2×10^{-5}
Neptunium-237	$<1.4 \times 10^{-4}$	$<2.5 \times 10^{-10}$	<0.008	3×10^{-6}
Plutonium-238	5.1×10^{-6}	8.9×10^{-12}	<0.001	5×10^{-6}
Plutonium-239	2.9×10^{-5}	5.1×10^{-11}	0.001	5×10^{-6}
Radium-226	1.1×10^{-2}	1.9×10^{-8}	63	3×10^{-8}
Radium-228	7.0×10^{-3}	1.2×10^{-8}	40	3×10^{-8}
Ruthenium-106	6.7×10^{-4}	1.2×10^{-9}	0.012	1×10^{-5}
Strontium-90	2.5×10^{-3}	4.4×10^{-9}	1.5	3×10^{-7}
Technetium-99	4.2	7.4×10^{-6}	2.5	3×10^{-4}
Thorium	3.3×10^{-4}	5.8×10^{-10}	0.058	1×10^{-6}
Uranium	1.9×10^{-1}	3.3×10^{-7}	55	6×10^{-7}

Footnotes:

(1) Radionuclides in the plant effluent which is discharged to the Great Miami River through a buried pipeline. An additional 1.3×10^{-3} Curie of uranium was contained in the storm sewer overflow discharged into a ditch at sampling point W6. The ditch empties into Paddy's Run above sampling point W7.

(2) DOE Order 5480.1A, Attachment XI-1, Table II, Concentration Guides for Water in Uncontrolled Areas. These Guides are for water such as the Great Miami River and are not meant to be applied to the plant effluent. They are listed here for comparison purposes.

0.02% each, of the DOE Order 5480.1A limit for water in uncontrolled areas. The percentage shown for the other nuclides in Table 5 would have been similarly reduced.

Operations at the FMPC did not cause any State standard for non-radioactive contaminants to be exceeded in the Great Miami River and Paddy's Run. The contaminants listed in Table 6 were selected for analysis and reporting because of the possibility of adding to the river concentrations greater than 1% of the applicable State standards.

There are no soil concentration standards for comparison with the results for uranium in soil listed in Table 7. Although normal concentration for uranium in local soil is 1-4 μg/g, there are no hazards associated with the increased concentrations caused by FMPC operations. Penetrating radiation from uranium is slight and the exposure contribution at the boundary locations would be considerably less than 1% of the Radiation Protection Standard ([1]) for people in uncontrolled areas. Considerations of the exposures from direct radiation at the boundary stations, exposures from airborne dust, and exposures from consumption of locally grown vegetables are presented in the section on "Maximum dose to an individual".

The results of sediment sampling given in Table 8 do not indicate any build-up of uranium along the edge of the water where settling might be expected to occur. Most of the uranium present in the site effluent is soluble, probably existing as a carbonate complex, and remains soluble after mixing in the river. Furthermore, periodic flooding, which is severe enough to cause channel alteration and bank erosion, scours

TABLE 6 Non-Radioactive Contaminants in Water

Contaminant	Sampling Point (1)	Number of Samples	Maximum Conc. Found mg/L	Minimum Conc. Found mg/L	Average Concentration mg/L	Average Concentration % of Standard	Average Concentration 95% Confidence Limits	Detection Limit	Standard (2)
Fluoride	W1	52	0.9	0.2	0.5	25	±15%	0.1 mg/L	2.0 mg/L
	W3	52	0.9	0.2	0.5	25			
	W4	52	1.0	0.2	0.5	25			
	W5	12	0.5	0.2	0.2	10			
	W7	12	0.8	0.2	0.3	15			
	W8	11	0.2	0.1	0.1	5			
Nitrate Nitrogen	W1	52	11	0.7	5.6	25	±10%	0.3 mg/L	22 mg/L
	W3	52	11	0.8	6.0	27			
	W4	52	11	0.8	5.9	27			
	W5	12	4.3	0.5	2.2	10			
	W7	12	5.4	1.5	3.1	14			
	W8	11	3.1	0.4	1.0	5			
Chloride	W1	52	111	15	55	22	±5%	5 mg/L	250 mg/L
	W3	52	95	15	56	22			
	W4	52	95	14	56	22			
	W5	12	46	13	29	12			
	W7	12	65	8	24	10			
	W8	11	122	27	51	20			
pH (3)	W1	52	8.8	7.9	NA (4)	NA	±0.1 pH units	NA	6.5 – 9.0
	W3	52	8.8	7.8					
	W4	52	8.9	7.9					
	W5	52	8.3	7.5					
	W7	28	8.4	7.5					
	W8	24	8.0	7.4					

Footnotes:

(1) See sampling locations shown in Figure 4.

(2) Ohio EPA Water Quality Standards, Administrative Code Chapter 3745-1.

(3) pH is reported in standard units.

(4) Not Applicable.

TABLE 7 Uranium in Soil

Sampling Point (2)	Uranium Concentration (1)			Detection Level
	μg/g	μCi/g	95% Confidence Level	
BS1	17	5.7×10^{-6}	±25%	0.5 μg/g
BS2	23	7.8×10^{-6}		
BS3	134	4.5×10^{-5}		
BS4	6	2.0×10^{-6}		
BS5	24	8.1×10^{-6}		
BS7	3	1.0×10^{-6}		

Footnotes:

(1) Results on dry basis.

(2) See sampling locations shown in Fibure 2.

TABLE 8 Uranium in Miami River Sediment

Distance from FMPC Outfall	Uranium Concentration (1)			Detection Level
	μg/g	μCi/g	95% Confidence Level	
Upstream				
3.7 miles	1.6	5.4×10^{-7}	±25%	0.5 μg/g
1.5 miles	0.9	3.0×10^{-7}		
Downstream				
50 feet	1.6	5.4×10^{-7}	±25%	0.5 μg/g
0.8 mile	1.2	4.1×10^{-7}		
3.3 miles	2.0	6.8×10^{-7}		
4.5 miles (2)	3.2	1.1×10^{-6}		
4.7 miles (3)	1.6	5.4×10^{-7}		

Footnotes:

(1) Results on dry basis.

(2) Upstream of mouth of Paddy's Run.

(3) Downstream of mouth of Paddy's Run.

the river bed and banks and prevents any long-term sediment accumulation.

NPDES PERMIT

A permit to discharge liquid effluent has been issued to the FMPC by the U. S. Environmental Protection Agency. The permit was issued under a national control program called the National Pollutant Discharge Elimination System (NPDES). Schedules for sampling are specified in the permit and results are reported to the EPA on a quarterly basis. Table 9 lists parameters and shows the degree of compliance achieved during 1981 on the FMPC NPDES permit which became effective November 1, 1980. There was 100% compliance with all permit limits, with the exception of one violation of the daily maximum limit for ammonia at Manhole-175.

ESTIMATION OF RADIATION DOSE

Maximum potential dose at the site boundary. During 1981, the highest average concentration of airborne uranium found at the FMPC site boundary was 5.3×10^{-15} μCi/mL, at boundary station BS-3 (see Table 1). The radiation dose to the lungs which would have been received from this concentration was calculated using a methodology based on transport and uptake models.([5]) This method yields a 50-year lung dose commitment of 4 mrems, assuming the year-long inhalation of airborne uranium at a concentration of 5.3×10^{-15} μCi/mL. The highest average thorium concentration (6.7×10^{-18} μCi/mL at BS-3) adds 0.08 mrems to the 50-year lung dose commitment.

The Great Miami River is not used as a source of drinking water, but calculations of 50-year dose commitments were made assuming an individual took water from a location downstream from the FMPC discharge point. A

TABLE 9 NPDES Summary

Location	Parameter	Daily Maximum Limit (1)		Daily Average Limit (1)		Compliance With Permit Limits, %
		mg/L	kg/day	mg/L	kg/day	
Manhole-175	Suspended solids	60	– (2)	20	–	100
	Nitrate (N)	–	3180	–	1590	100
	Ammonia (N)	–	43	–	28	99
	Oil & Grease	15	–	–	–	100
	Residual Chlorine	0.10	–	–	–	100
	pH (Std. pH units)	6.5 – 10	–	–	–	100
General Sump & Clearwell Combined	Suspended solids	–	12.8	–	6.2	100
	Chromium (+6)	–	0.008	–	0.004	100
	Chromium (total)	–	0.102	–	0.050	100
	Iron	–	0.85	–	0.41	100
	Nickel	–	0.256	–	0.124	100
	Copper	–	0.051	–	0.025	100
Storm Sewer Lift Station	Suspended solids	100	–	30	–	100
	Oil & Grease	15	–	–	–	100
Sewage Treatment Plant	BOD, 5-day	40	10.0	20	5.0	100
	Suspended solids	40	10.0	20	5.0	100
	Fecal, coliform (No. per 100 mL)	2000	–	1000	–	100
Storm Sewer Outfall	Suspended solids	100	–	30	–	100
	Oil & Grease	15	–	–	–	100

Footnotes:

(1) Permit limits are in units of mg/L or kg/day except pH and Fecal coliform bacteria.

(2) Not applicable.

daily intake of 2.2 liters per day was assumed.([5]) This intake, for a full year, would result in a 50-year dose commitment of 1.2 mrem to the bone and 0.13 mrem to the total body.

Throughout 1981, gamma radiation at the seven boundary sampling stations was measured with thermoluminescent dosimeters which were changed and processed every three months (see Table 10). The maximum annual average, 0.018 mR/hr, was measured at BS-6. Background radiation in the general area around the FMPC was about 0.011 - 0.012 mR/hr, as indicated by the data for BS-2 and BS-4, which are both located about 4000 feet away from the nearest production or storage building.

If 0.011 mR/hr is used as the natural background, 0.007 mR/hr at BS-6 was due to FMPC operations. This results in a maximum potential annual exposure at the boundary of 0.06 R. This exposure is equivalent to about 12% of the DOE Order 5480.1 dose limit for individuals at points of maximum exposure.

The maximum average fenceline radon-222 concentration was 0.70 pCi/L, measured at boundary station BS-7. This concentration includes naturally-occurring radon plus that from FMPC operations. If the concentration of radon from natural sources is taken as 0.36 pCi/L (see Table 2), a maximum average of 0.34 pCi/L could be attributed to the FMPC. Year-long intake of this concentration would produce a radiation dose of 0.16 rem to the bronchial epithelium. This dose is 11% of the DOE standard for individuals at points of maximum probable exposure.([1])

TABLE 10 Radiation Dose Rates at Site Boundary

Location (1)	Dose Rate, mR/hr	
	Range (2)	Average
BS1	0.010	0.010
BS2	0.011 – 0.012	0.012
BS3	0.012	0.012
BS4	0.011 – 0.012	0.011
BS5	0.010 – 0.012	0.011
BS6	0.017 – 0.021	0.018
BS7	0.011 – 0.013	0.012

Footnotes:

(1) See Figure 2.

(2) Continuous monitoring dosimeters were processed quarterly.

Maximum dose to an individual. The highest average concentration of airborne uranium and thorium at an offsite residence occurred near BS-3. Diffusion equation calculations([6]) yield average uranium and thorium concentrations of 2.71×10^{-15} μCi/mL and 3.81×10^{-18} μCi/mL, respectively, for this location. Using these air concentrations, and assuming an occupancy time factor of 80%, a 50-year lung dose commitment of 1.7 mrem was calculated.

The maximum dose to an individual due to direct radiation from FMPC operations was calculated from the dose rate data in Table 10. An annual whole body dose of 9 mrem was obtained, assuming an occupancy factor of 80%.

River water is not used as a drinking water supply but it is possible for the residents to have an additional uranium intake if they consume a significant quantity of locally grown vegetables. The average concentration of uranium found in vegetables grown near the FMPC is 0.021 micrograms per gram wet weight. Assuming that a resident would consume an average of one-half pound per day of fresh or home-canned vegetables an annual ingestion of 1.74 mg would result. The following 50-year dose commitments were calculated for this intake: total body, 0.06 mrem; bone, 0.95 mrem; kidney, 0.22 mrem; G.I. tract, 0.07 mrem.

Maximum dose to a population group. The community of Ross, Ohio, is located about 2.5 miles from the center of the production area. Because of distance and wind direction frequency, boundary station BS-3 is the sampling location which would give the best indication of contaminants moving toward Ross. Starting with the average concentrations

found at BS-3, diffusion equation calculations give average uranium and thorium concentrations at Ross of 7.55×10^{-16} μCi/mL and 9.54×10^{-19} μCi/mL, respectively. Assuming a time occupancy factor of 80%, the following 50-year dose commitments were calculated for this population group: lung, 0.47 mrem, kidney, 0.1 mrem; bone, 0.06 mrem; total body, 0.01 mrem. Each of these doses is less than 0.1% of the applicable DOE radiation protection standard for the general population.

80-km man-rem dose. The total population within an 80-km radius of the FMPC is 2.5 million (see Table 11). The total 50-year whole body dose commitment due to airborne uranium and thorium for this group is 2.0 person-rem. For this same population group, whole body dose due to natural radiation is 200,000 person-rem per year.([7])

Summary of exposure data. Radiation exposures to the public due to FMPC activities were only a small fraction of the DOE radiation protection standards. A summary of pertinent exposure data is given in Table 12.

OTHER ENVIRONMENTAL CONTROLS

Sewage Plant effluent. Effluent from the FMPC Sewage Treatment Plant is combined with other effluents at Manhole-175 (see Figure 4). Prior to discharge from the Sewage Treatment Plant, however, the effluent is carefully monitored and sampled to determine efficiency of operation and compliance with all applicable standards. Table 9 shows that the Sewage Treatment Plant was in 100% compliance with its NPDES limits.

TABLE 11 Population Distribution within 80-km (50 mi) of the FMPC

Compass Sector	Estimated Population (1)			
	0-8 km (0-5 mi)	8-16 km (5-10 mi)	16-32 km (10-20 mi)	32-80 km (20-50 mi)
N	445	3,395	6,743	29,597
NNE	221	18,959	12,805	148,079
NE	489	32,001	36,705	557,783
ENE	2,489	25,760	29,830	55,078
E	512	40,770	70,762	85,240
ESE	713	54,533	150,630	107,365
SE	1,606	36,467	247,846	118,490
SSE	985	28,932	207,202	51,946
S	669	19,214	53,673	39,116
SSW	390	4,217	10,614	21,987
SW	185	2,957	13,066	16,574
WSW	440	4,961	3,930	19,199
W	519	1,765	3,292	31,629
WNW	157	1,361	5,211	21,605
NW	511	1,433	1,802	37,945
NNW	519	1,134	21,042	71,493
Totals	10,850	277,859	875,153	1,413,126

Total in all sectors: 2,576,988

Footnote:

(1) Based on "Report of Findings, Population Studies for DOE Feed Materials Production Center, Near Fernald, Ohio, for NLO, Inc.", May 18, 1981.

TABLE 12 Summary of 1981 Exposure Data

Type of Exposure	Dose Estimate	% of Standard	Radiation Protection Standard (1)
"Maximum potential" dose due to direct radiation from FMPC operations.	0.06 Rem	12	0.5 Rem
"Maximum individual" whole-body dose due to direct radiation from FMPC operations.	0.009 Rem	1.8	0.5 Rem
"Population group" 50-year whole-body dose commitment from airborne uranium and thorium.	0.000012 Rem	0.007	0.17 Rem
"80-km" 50-year whole-body dose commitment from airborne uranium and thorium.	2.0 person-Rem	–	–

Footnote:

(1) DOE Order 5480.1A, Chapter XI, Exposure of Individuals and Population Groups in Uncontrolled Areas.

Steam Plant emissions. The steam generation plant at the FMPC utilizes two boilers with a total design capacity of 150,000 lbs of steam per hour. Electrostatic precipitators keep the particulate discharge below the Ohio EPA particulate limit of 0.13 pounds per million BTU input.

Sulfur dioxide emission limits for stationary facilities have been adopted by the Ohio Environmental Protection Agency. Under these rules, the limit for the FMPC steam plant is 2.0 pounds of sulfur dioxide per million BTU input from each boiler. This limit is equivalent to the use of coal containing 1.3% sulfur. Coal containing only 1% sulfur, or less, is purchased in order to meet the State's SO_2 emission requirement.

Particulates from industrial processes. Maximum rates of emissions of particulates from industrial processes are prescribed in State of Ohio EPA Regulation 3745-17-11, "Restriction of emission of particulate matter from industrial processes." Through the use of many dust collectors, scrubbers, electrostatic precipitators, and other types of air cleaning equipment, particulate emissions from FMPC process operations are far below the established limits. No problems are anticipated in remaining in compliance with the State standard.

Incinerator operations. A new FMPC incinerator was placed in operation during 1980. The FMPC incinerator is used for the destruction of combustible trash, paper, wood, etc. The incinerator was specified to meet State emission standards. The old incinerator, in use for over two decades, could not meet the State of Ohio discharge limit

of 0.10 pound of particulate matter per 100 pounds of combustible refuse charged. Results of preliminary emissions testing of the new incinerator have prompted repair work and changes in operational methods which should bring particulate emissions below the state limits.

REFERENCES

(1) U. S. Department of Energy, Order 5480.1A, Environmental Protection, Safety and Health Protection Program for DOE Operations, Chapter XI Requirements for Radiation Protection. August 13, 1981.

(2) U. S. Department of Energy, Order 5484.1, Environmental Protection, Safety and Health Protection Information Reporting Requirements. February 24, 1981.

(3) Ohio Environmental Protection Agency, Ambient Air Quality Standards.

(4) Ohio Environmental Protection Agency, Water Quality Standards Administrative Code Chapter 3745-1, effective February 14, 1978.

(5) G. G. Killough and L. R. McKay. A Methodology for Calculating Radiation Doses from Radioactivity Released to the Environment, USERDA Report ORNL-4992. March, 1976.

(6) D. H. Slade, editor. Meterology and Atomic Energy - 1968, U. S. Air Resources Laboratories, USAEC Report TID-24190. July, 1968.

(7) D. T. Oakley. Natural Radiation Exposure in the United States, USEPA Report ORP/SID-72-1. June, 1972.

48

FEED MATERIALS PRODUCTION CENTER

ENVIRONMENTAL MONITORING REPORT

FOR 1981

EXTERNAL DISTRIBUTION LIST

Federal Activities Coordinator, U. S. EPA, Region V
Director, State of Ohio, Department of Health
Planning Director, Ohio River Basin Commission
Commissioner of Health, City of Cincinnati
Health Commissioner, County of Hamilton, Board of Health
Atomic Energy Coordinator, State of Ohio, Development Department
Director, State of Ohio Environmental Protection Agency
Southwest District Office, State of Ohio Environmental Protection Agency
Crosby Township Board of Trustees, New Haven, Ohio
Ross Township Board of Trustees, Ross, Ohio