~~R-001-206.16~~
G-000-206.16

140

KNOLLMAN'S FARM - OUTFALL SEWER RESTORATION EXCAVATION DETAILS

06-16-89

WMCO/X
11
DATA

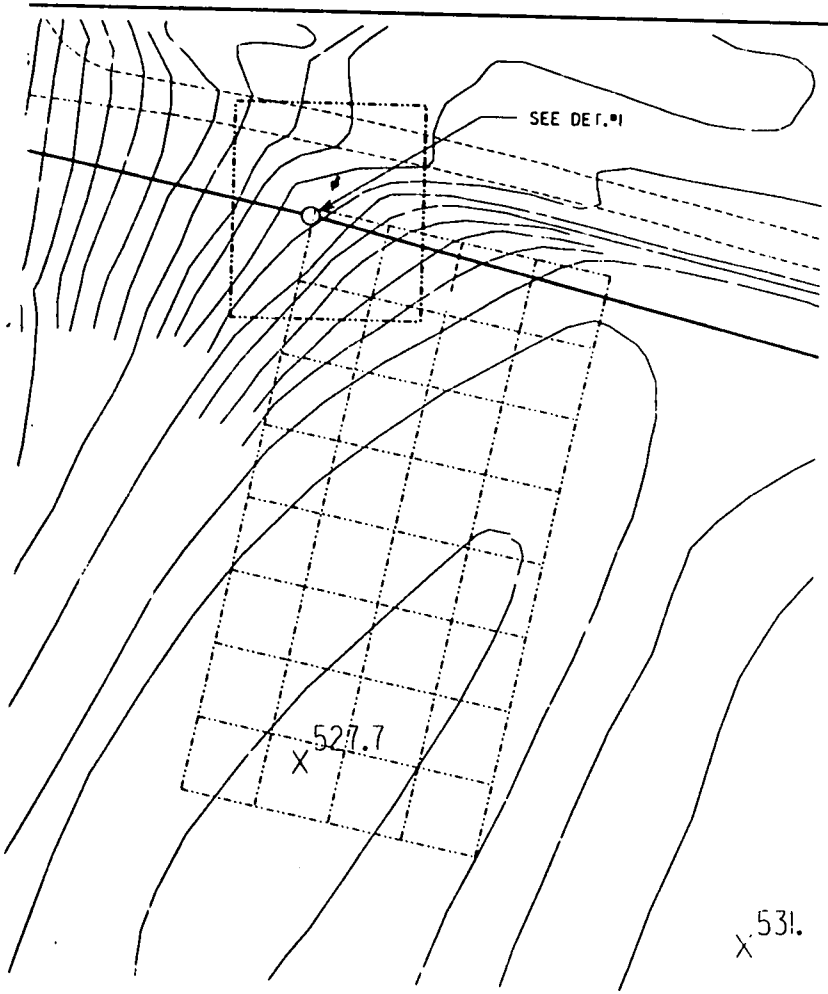

LOCATION MAP

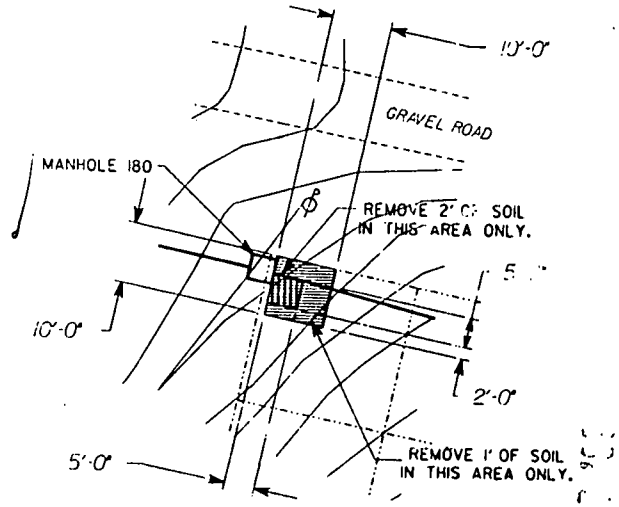

DETAIL #1

G-000-206.16

R-001-0110

DO NOT SCALE REDUCED DRAWING

REVISIONS	DATE	DWN. BY	APPD.	NO.	REVISIONS	DATE	DWN. BY	APPD.	REF. DWG. NO.

NOTE: WMCO C.A.D. DRAWING NOT TO BE REVISED MANUALLY

APPROVALS: CHEMICAL, CIVIL & STR., ELECTRICAL, ENGINEER, INSTRUMENT, MECHANICAL, CHECKED, APPROVED; S.S.& H., MAINTENANCE, IND. SAFETY, Q.A., PRODUCTION, PROD. TECH., WASTE MANAGE.

WESTINGHOUSE MAT'LS. CO. OF OHIO
FERNALD, OHIO
FEED MATERIALS PRODUCTION CENTER
U.S. DEPARTMENT OF ENERGY

KNOLLMANS FARM — MANHOLE 180
OUTFALL SEWER RESTORATION
EXCAVATION DETAILS

00X-5500-G-02502 | 0

FILE NAME: [illegible]

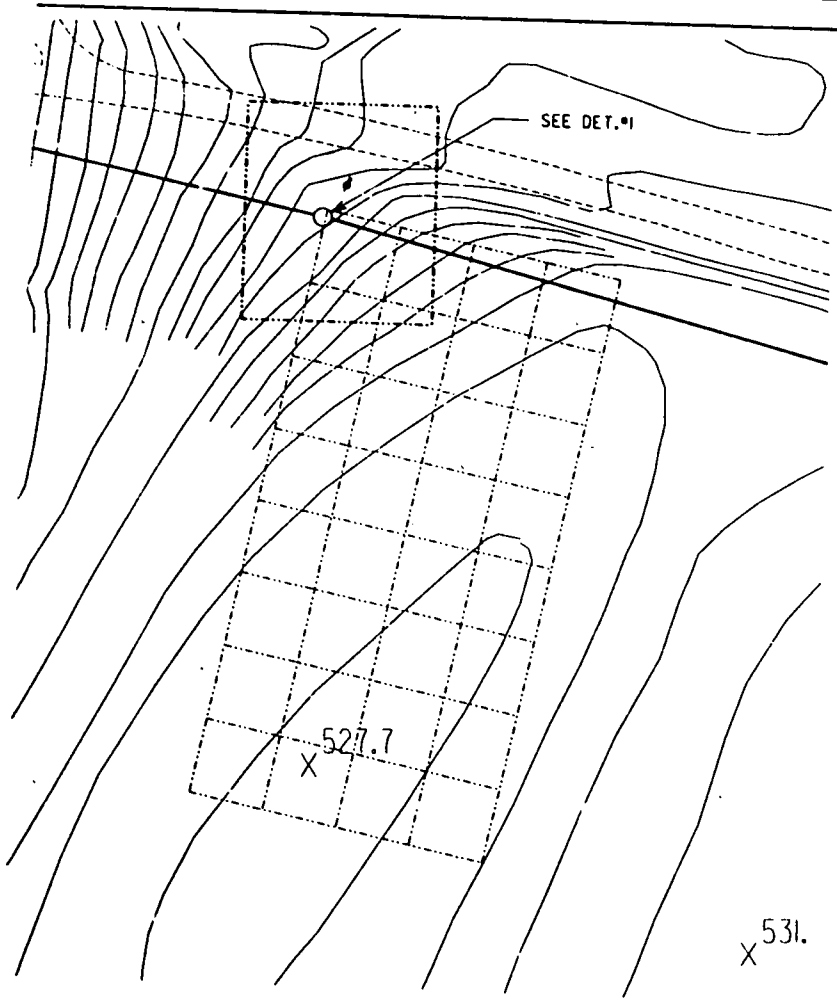

LOCATION MAP

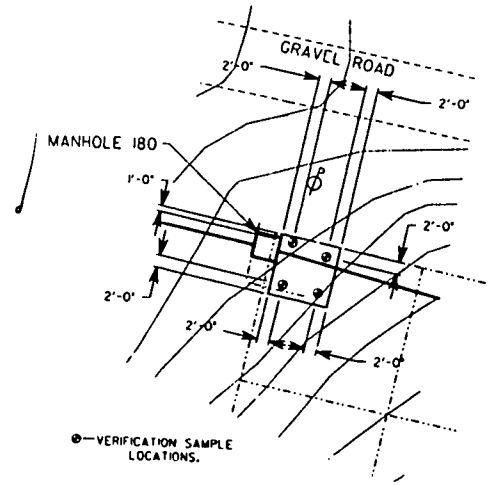

DETAIL #1

DO NOT SCALE REDUCED DRAWING

REVISIONS	DATE	DWN. BY	APPD.	NO.	REVISIONS	DATE	DWN. BY	APPD.	REF. DWG. NO.

NOTE: WMCO C.A.D. DRAWING NOT TO BE REVISED MANUALLY

APPROVALS: CHEMICAL, CIVIL & STR., ELECTRICAL, ENGINEER, INSTRUMENT, MECHANICAL, CHECKED, APPROVED; C.S. & H., MAINTENANCE, IND. SAFETY, O.A., PRODUCTION, PROD. TECH., WASTE MANAGE.

WESTINGHOUSE MAT'LS CO. OF OHIO
FERNALD, OHIO
FEED MATERIALS PRODUCTION CENTER
U.S. DEPARTMENT OF ENERGY

KNOLLMANS FARM — MANHOLE 180
OUTFALL SEWER RESTORATION
VERIFICATION SAMPLE LOCATIONS

00X-5500-G-02503 | 0

FILE NAME: [illegible]

140

DO NOT SCALE REDUCED DRAWING

NO.	REVISIONS	DATE	DRN. BY	APPD.	NO.	REVISIONS	DATE	DRN. BY	APPD.	REF. DOC. NO.

NOTE: WACO C.A.D. DRAWING NOT TO BE REVISED MANUALLY

WESTINGHOUSE MAT'LS. CO. OF OHIO
FERNALD, OHIO
FEED MATERIALS PRODUCTION CENTER
U.S. DEPARTMENT OF ENERGY

KNOLLMANS FARM — OUTFALL SEWER
CUTFALL SEWER RESTORATION
SAMPLING GRID LOCATIONS

00X-5500-G-02504 | 0

FILE NAME:

40

3

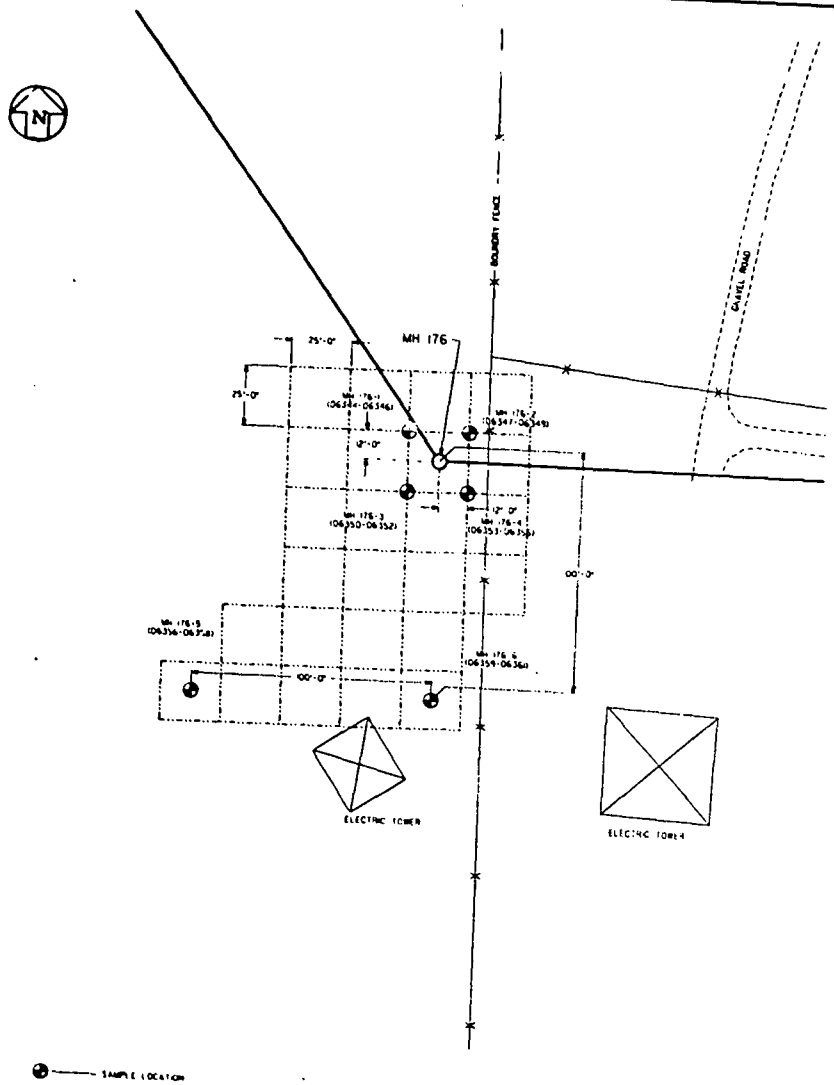

SAMPLE NO.	TOTAL URANIUM *			TOTAL THORIUM *		
	0-6"	6"-12"	12"-18"	0-6"	6"-12"	12"-18"
1	23	-	-	-	-	-
2	-	-	-	-	-	-
3	15	-	-	-	-	-
4	12	-	-	-	-	-
5	12	-	-	-	-	-
6	29	-	-	-	-	-

* - SEE NOTE NO. 1

GENERAL NOTES:

1. ONLY THE VALUES ABOVE INSTRUMENT DETECTION LEVELS ARE SHOWN IN THE DATA TABLE. DETECTION LEVEL IS 11PPM FOR TOTAL URANIUM, AND 23PPM FOR THORIUM.
2. THE ACTION LEVEL AT WHICH REMEDIATION IS REQUIRED FOR RADIOLOGICALLY CONTAMINATED SOIL AT THE F.M.P.C. IS AS FOLLOWS: (REFER TO FMPC-720)

   NATURAL URANIUM-30 PICOCURIES PER GRAM, OR 45 PPM
   NATURAL THORIUM-10 PICOCURIES PER GRAM, OR 46 PPM

DO NOT SCALE REDUCED DRAWING

NO.	REVISIONS	DATE	DWN. BY	APPD.	NO.	REVISIONS	DATE	DWN. BY	APPD.	REF. DWG. NO.

NOTE: UNCID C.A.D. DRAWING NOT TO BE REVISED MANUALLY

WESTINGHOUSE MAT'LS CO. OF OHIO
FERNALD, OHIO
FEED MATERIALS PRODUCTION CENTER
U.S. DEPARTMENT OF ENERGY

KNOLLMANS FARM — MANHOLE 176
OUTFALL SEWER RESTORATION
SAMPLE GRID
MANHOLE 176

00X-5500-G-02505 | 0

FILE NAME: [illegible]

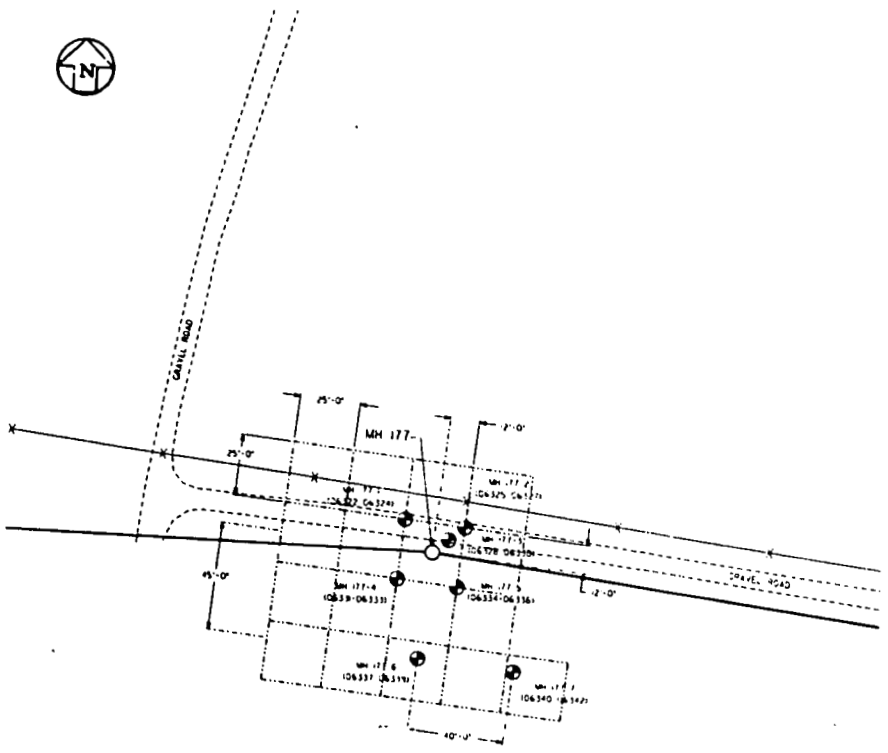

SAMPLE NO.	TOTAL URANIUM *			TOTAL THORIUM *		
	0-6"	6"-12"	12"-18"	0-6"	6"-12"	12"-18"
1	16	-	-	-	-	-
2	-	-	-	-	-	-
3	21	-	-	-	-	-
4	19	-	-	-	-	-
5	25	-	-	25	-	-
6	23	-	-	-	-	-
7	23	-	-	-	-	-

* - SEE NOTE NO. 1

GENERAL NOTES:

1. ONLY THE VALUES ABOVE INSTRUMENT DETECTION LEVELS ARE SHOWN IN THE DATA TABLE. DETECTION LEVEL IS 11PPM FOR TOTAL URANIUM, AND 2.3PPM FOR THORIUM.
2. THE ACTION LEVEL AT WHICH REMEDIATION IS REQUIRED FOR RADIOLOGICALLY CONTAMINATED SOIL AT THE F.M.P.C. IS AS FOLLOWS (REFER TO FMPC-720)

   NATURAL URANIUM-30 PICOCURIES PER GRAM, OR 45 PPM
   NATURAL THORIUM-10PICOCURIES PER GRAM, OR 46 PPM.

DO NOT SCALE REDUCED DRAWING

NO.	REVISIONS	DATE	DWN. BY	APPD.	NO.	REVISIONS	DATE	DWN. BY	APPD.	REF. DWG. NO.

NOTE: WHEN C.A.D. DRAWING NOT TO BE REVISED MANUALLY

APPROVAL

WESTINGHOUSE MAT'LS CO. OF OHIO
FERNALD, OHIO
FEED MATERIALS PRODUCTION CENTER
U.S. DEPARTMENT OF ENERGY

KNOLLMANS FARM — MANHOLE 177
OUTFALL SEWER RESTORATION
SAMPLE GRID
MANHOLE 177

00X-5500-G-02506 | 0

5

140

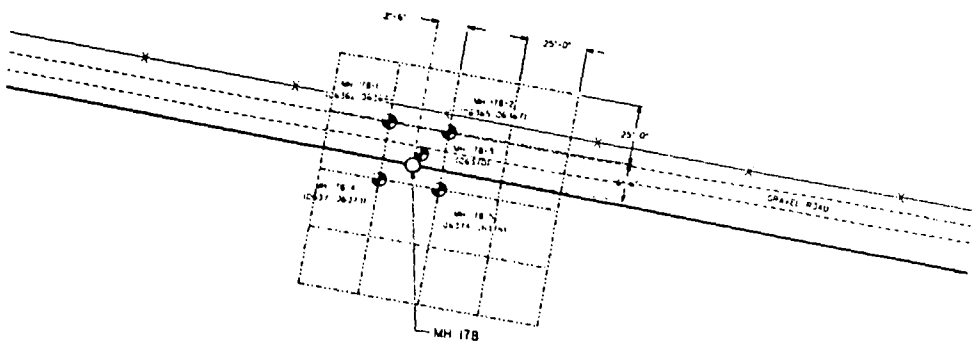

SAMPLE NO.	TOTAL URANIUM *			TOTAL THORIUM *		
	0-6"	6"-12"	12"-18"	0-6"	6"-12"	12"-18"
1	13	-	-	-	-	-
2	14	-	-	-	-	-
3	13	12	-	-	-	-
4	-	-	-	-	-	-
5	-	-	-	-	-	-

* - SEE NOTE NO. 1

GENERAL NOTES:

1. ONLY THE VALUES ABOVE INSTRUMENT DETECTION LEVELS ARE SHOWN IN THE DATA TABLE. DETECTION LEVEL IS 11PPM FOR TOTAL URANIUM, AND 23PPM FOR THORIUM.
2. THE ACTION LEVEL AT WHICH REMEDIATION IS REQUIRED FOR RADIOLOGICALLY CONTAMINATED SOIL AT THE F.M.P.C. IS AS FOLLOWS:(REFER TO FMPC-720)

   NATURAL URANIUM-30 PICOCURIES PER GRAM, OR 45 PPM
   NATURAL THORIUM-10PICOCURIES PER GRAM, OR 46 PPM.

SAMPLE LOCATION

DO NOT SCALE REDUCED DRAWING

NO.	REVISIONS	DATE	DWN. BY	APPD.	NO.	REVISIONS	DATE	DWN. BY	APPD.	REF. DOC. NO.

NOTE: WMCC C.A.D. DRAWING NOT TO BE REVISED MANUALLY

WESTINGHOUSE MAT'LS CO. OF OHIO
FERNALD, OHIO
FEED MATERIALS PRODUCTION CENTER
U.S. DEPARTMENT OF ENERGY

KNOLLMANS FARM — MANHOLE 178
OUTFALL SEWER RESTORATION
SAMPLE GRID
MANHOLE 178

00X-5500-G-02507 | 0

6

40

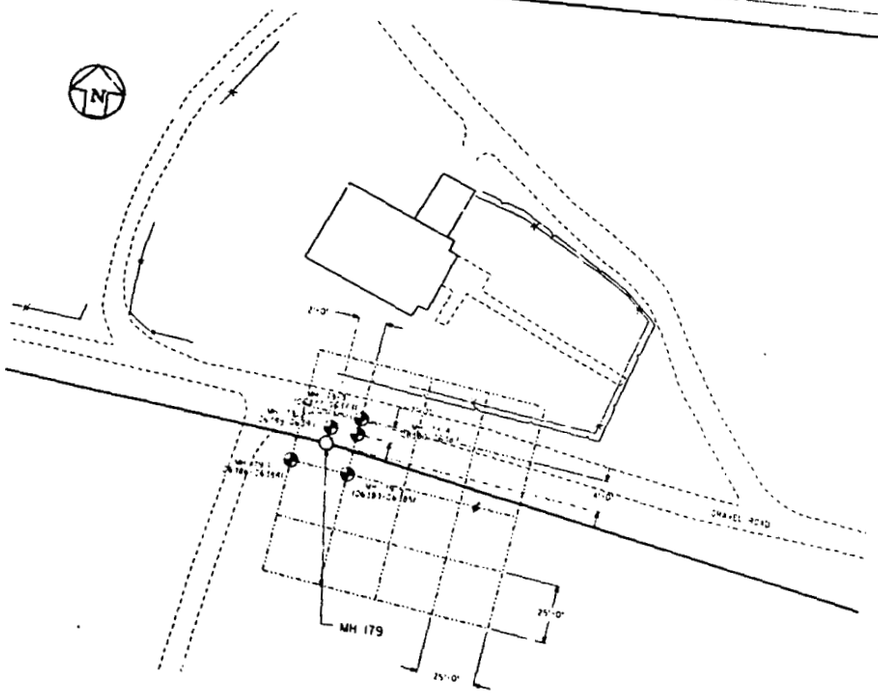

SAMPLE NO.	TOTAL URANIUM *			TOTAL THORIUM *		
	0-6"	6"-12"	12"-18"	0-6"	6"-12"	12"-18"
1	-	-	-	-	-	-
2	-	-	-	-	-	-
3	11	-	-	-	-	-
4	13	-	-	-	-	-
5	-	-	12	-	-	-

* - SEE NOTE NO. 1

GENERAL NOTES:

1. ONLY THE VALUES ABOVE INSTRUMENT DETECTION LEVELS ARE SHOWN IN THE DATA TABLE. DETECTION LEVEL IS 11PPM FOR TOTAL URANIUM AND 23PPM FOR THORIUM.
2. THE ACTION LEVEL AT WHICH REMEDIATION IS REQUIRED FOR RADIOLOGICALLY CONTAMINATED SOIL AT THE F.M.P.C. IS AS FOLLOWS (REFER TO FMPC-7201)
   NATURAL URANIUM-30 PICOCURIES PER GRAM, OR 45 PPM
   NATURAL THORIUM- 10PICOCURIES PER GRAM, OR 46 PPM.

SAMPLE LOCATION

NO.	REVISIONS	DATE	DWN. BY	APPD.	NO.	REVISIONS	DATE	DWN. BY	APPD.	REF. DWG. NO.

NOTE: WHEN CAD DRAWING NOT TO BE REVISED MANUALLY

DO NOT SCALE REDUCED DRAWING

WESTINGHOUSE MAT'LS CO. OF OHIO
FERNALD, OHIO
FEED MATERIALS PRODUCTION CENTER
U.S. DEPARTMENT OF ENERGY

KNOLLMANS FARM — MANHOLE 179
OUTFALL SEWER RESTORATION
SAMPLE GRID
MANHOLE 179

00X-5500-G-02508 | 0

FILE NAME: [illegible]

140

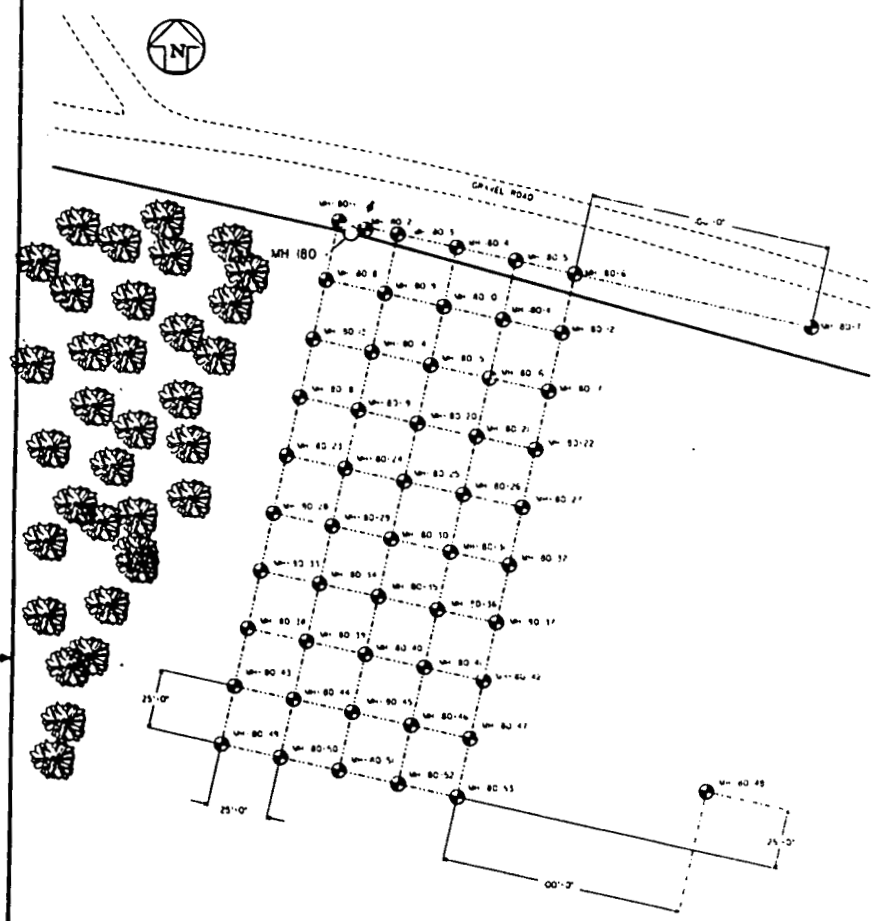

SAMPLE NO.	TOTAL URANIUM * 0-6"	6"-12"	12"-18"	TOTAL THORIUM * 0-6"	6"-12"	12"-18"
1						
2	28	54	28			
3						
4						
5						
6						
7						
8						
9						
10						
11						
12						
13	12					
14						
15						
16						
17						
18						
19						
20	16					
21	15				23	
22						
23						
24	17	16				
25						
26						
27						
28						
29	16	17			24	
30						

SAMPLE NO.	TOTAL URANIUM * 0-6"	6"-12"	12"-18"	TOTAL THORIUM * 0-6"	6"-12"	12"-18"
31						
32						24
33						
34	19	17		23		
35			17		24	27
36					23	
37						
38						
39	16	19		23	24	
40						
41						
42						
43						24
44	16			24		
45						
46						
47						
48						
49				24		
50	16			24		
51						
52						
53						

* - SEE NOTE NO. 1

GENERAL NOTES:

1. ONLY THE VALUES ABOVE INSTRUMENT DETECTION LEVELS ARE SHOWN IN THE DATA TABLE. DETECTION LEVEL IS 11PPM FOR TOTAL URANIUM, AND 23PPM FOR THORIUM.
2. THE ACTION LEVEL AT WHICH REMEDIATION IS REQUIRED FOR RADIOLOGICALLY CONTAMINATED SOIL AT THE F.M.P.C. IS AS FOLLOWS:(REFER TO FMPC-720)

   NATURAL URANIUM-30 PICOCURIES PER GRAM, OR 45 PPM
   NATURAL THORIUM- 10PICOCURIES PER GRAM, OR 46 PPM.

DO NOT SCALE REDUCED DRAWING

NO.	REVISIONS	DATE	DRN. BY	APPD.	NO.	REVISIONS	DATE	DRN. BY	APPD.	REF. DWG. NO.

NOTE: WHEN CADD DRAWING NOT TO BE REVISED MANUALLY

WESTINGHOUSE MAT'LS. CO. OF OHIO
FERNALD, OHIO
FEED MATERIALS PRODUCTION CENTER
U.S. DEPARTMENT OF ENERGY

KNOLLMANS FARM — MANHOLE 180
OUTFALL SEWER RESTORATION
SAMPLE GRID
MANHOLE 180

00X-5500-G-02509 | 0

FILE NAME: [illegible]

140

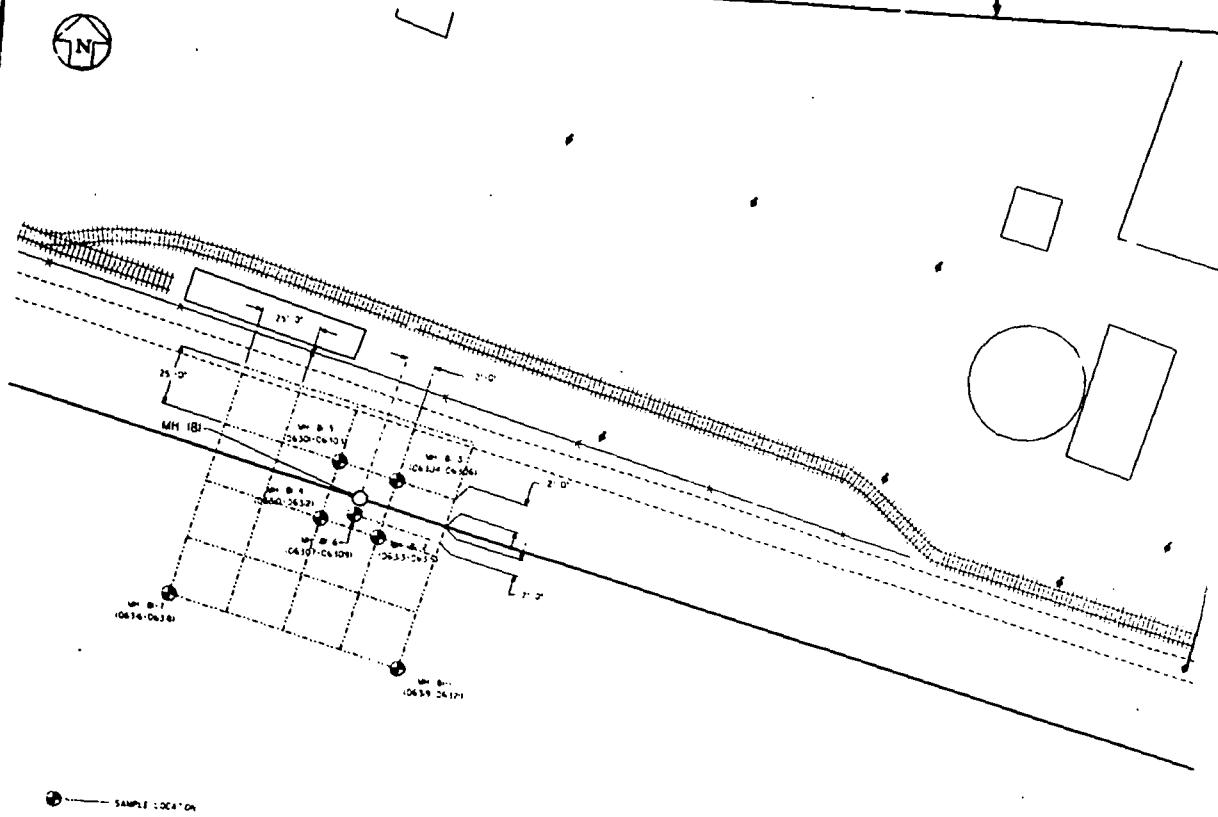

SAMPLE NO.	TOTAL URANIUM *			TOTAL THORIUM *		
	0-6"	6"-12"	12"-18"	0-6"	6"-12"	12"-18"
1	-	-	-	-	-	-
2	-	-	-	-	-	-
3	-	-	-	-	-	-
4	-	-	-	-	-	-
5	-	-	-	-	-	-
6	16	-	-	-	-	-
7	-	-	-	-	-	-

* - SEE NOTE NO. 1

GENERAL NOTES:

1. ONLY THE VALUES ABOVE INSTRUMENT DETECTION LEVELS ARE SHOWN IN THE DATA TABLE. DETECTION LEVEL IS 11PPM FOR TOTAL URANIUM, AND 23PPM FOR THORIUM.
2. THE ACTION LEVEL AT WHICH REMEDIA[illegible] IS REQUIRED FOR RADIOLOGICALLY CONTAMINATED SOIL [illegible] THE F.M.P.C. IS AS FOLLOWS:(REFER TO FMPC-720)

   NATURAL URANIUM-30 PICOCURIES PER GRAM, OR 45 PPM
   NATURAL THORIUM-10PICOCURIES PER GRAM, OR 46 PPM.

DO NOT SCALE REDUCED DRAWING

NO.	REVISIONS	DATE	DWN. BY	APPD.	NO.	REVISIONS	DATE	DWN. BY	APPD.	REF. DWG. NO.

NOTE: VMCO C.A.D. DRAWING NOT TO BE REVISED MANUALLY

APPROVED

WESTINGHOUSE MAT'LS CO. OF OHIO
FERNALD, OHIO
FEED MATERIALS PRODUCTION CENTER
U.S. DEPARTMENT OF ENERGY

KNOLLMAYS FARM — MANHOLE 181
OUTFALL SEWER RESTORATION
SAMPLE GRID
MANHOLE 181

00X-5500-G-02510 | 0

FILE NAME:

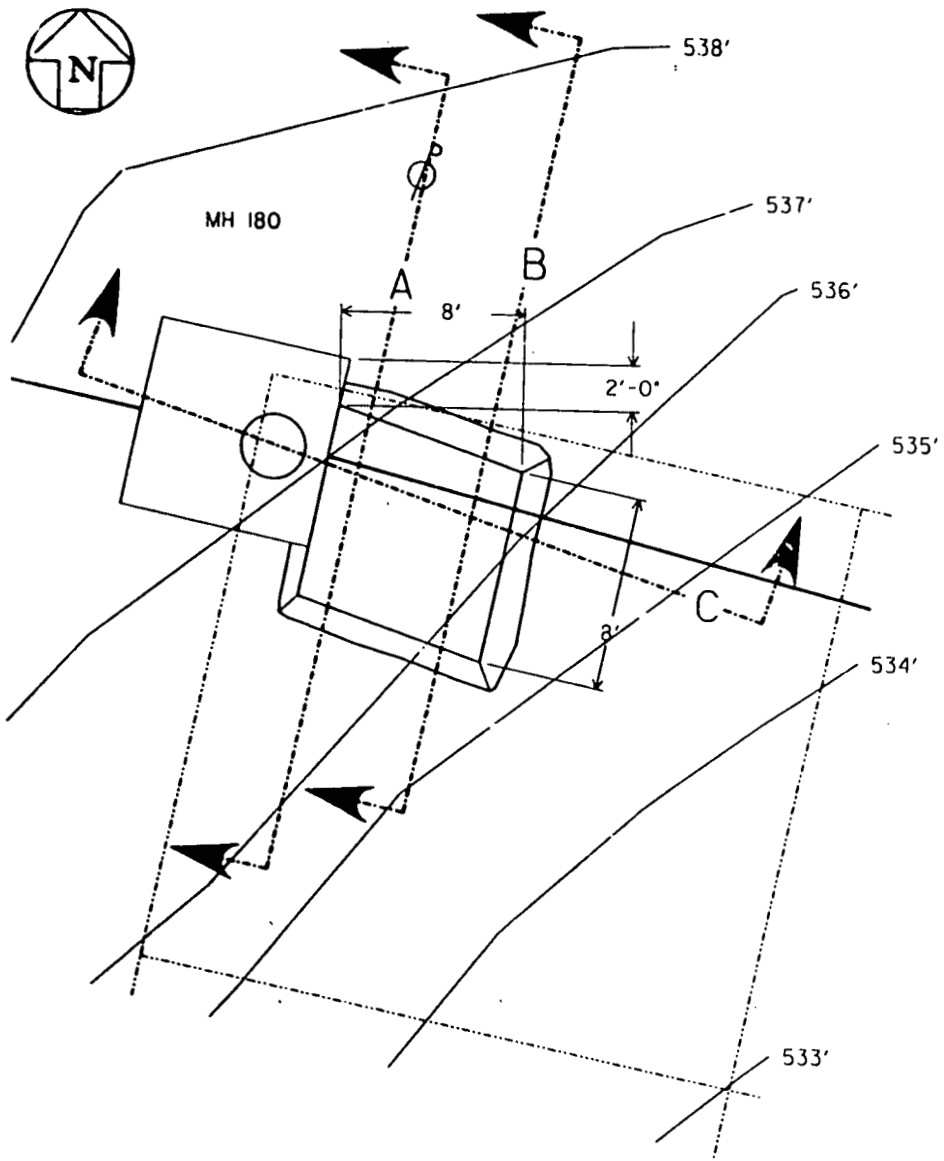

SECTION - A

SECTION - B

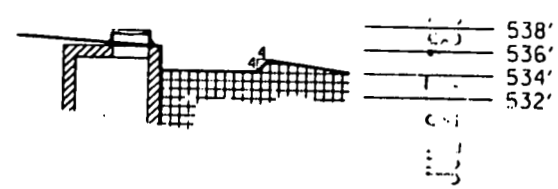

SECTION - C

DO NOT SCALE REDUCED DRAWING

REVISIONS	DATE	DWN. BY	APPD.	NO.	REVISIONS	DATE	DWN. BY	APPD.	REF. DWG. NO.

NOTE: WMCO C.A.D. DRAWING NOT TO BE REVISED MANUALLY

APPROVALS

CHEMICAL		K.S. & H.	
CIVIL & STR.		MAINTENANCE	
ELECTRICAL		NU. SAFETY	
ENGINEER		Q.A.	
INSTRUMENT		PRODUCTION	
MECHANICAL		PROD. TECH.	
CHECKED		WASTE MANAGE	
APPROVED			

WESTINGHOUSE MAT'LS. CO. OF OHIO
FERNALD, OHIO
FEED MATERIALS PRODUCTION CENTER
U.S. DEPARTMENT OF ENERGY

KNOLLMANS FARM MANHOLE 180
OUTFALL SEWER RESTORATION
EXCAVATION DETAILS
AS-BUILT

00X-5500-G-025II 0

FILE NAME: 2FA1(100,4)00XG025X500

10

140

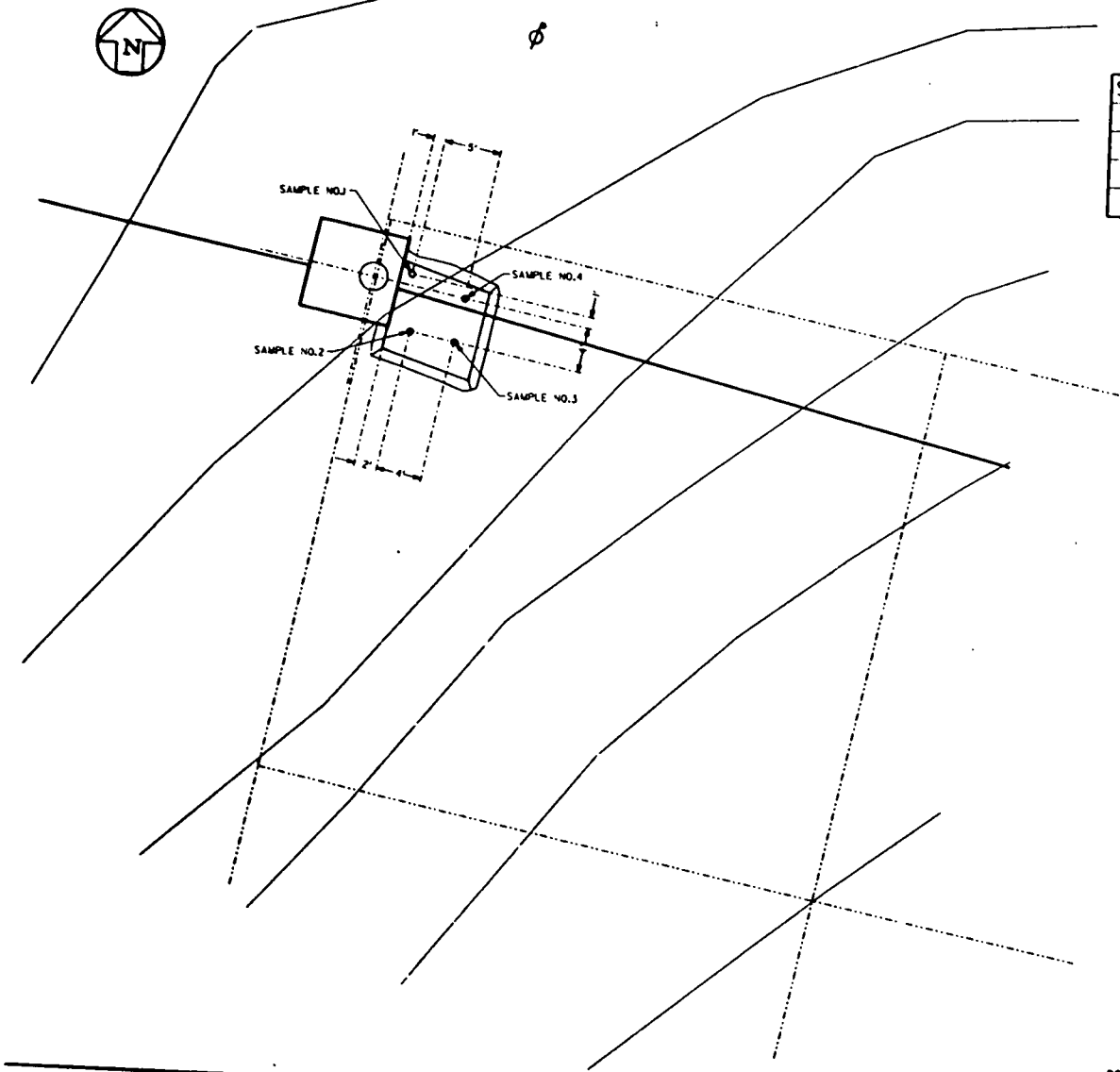

	TOTAL THORIUM IN PPM	TOTAL URANIUM IN PPM
SAMPLE NO.	0-6"	0-6"
1	<23	18
2	<23	27
3	<23	27
4	<23	<11

GENERAL NOTES:

1. THE ACTION LEVEL AT WHICH REMEDIATION IS REQUIRED FOR RADIOLOGICALLY CONTAMINATED SOIL AT THE F.M.P.C. IS AS FOLLOWS:(REFER TO FMPC-720)

   NATURAL URANIUM-35 PICOCURIES PER GRAM,OR 52 PPM
   NATURAL THORIUM-10 PICOCURIES PER GRAM,OR 46 PPM.

DO NOT SCALE REDUCED DRAWING

REVISIONS	DATE	DWN. BY	APPD.	NO.	REVISIONS	DATE	DWN. BY	APPD.	REF. DWG. NO.

NOTE: WMCO C.A.D. DRAWING NOT TO BE REVISED MANUALLY

APPROVALS

CHEMICAL		E.S. & H.	
CIVIL & STR.		MAINTENANCE	
ELECTRICAL		NU. SAFETY	
ENGINEER		Q.A.	
INSTRUMENT		PRODUCTION	
MECHANICAL		PROD. TECH.	
PIPES		WASTE MANAGE	
CHECKED			
APPROVED			

WESTINGHOUSE MAT'LS. CO. OF OHIO
FERNALD, OHIO
FEED MATERIALS PRODUCTION CENTER
U.S. DEPARTMENT OF ENERGY

KNOLLMANS FARM — MANHOLE 180
OUTFALL SEWER RESTORATION
VERIFICATION SAMPLE LOCATIONS
AS BUILT

00X-5500-G-02512 | 0

FILE NAME: ZFA1(100,4)00X-G02512.DGN