287 G-000-209.4

OFFSITE SOILS REMOVAL AUGUST 1989

08/01/1989

FMPC-2184
WMCO DOE-ORE
62
REPORT

[redacted] 287

FMPC - 2184
INTERNAL SPECIAL

OFFSITE SOILS REMOVAL

by

Gordon J. Brown
Dennis J. Carr

August 1989

FEED MATERIALS PRODUCTION CENTER

WESTINGHOUSE MATERIALS COMPANY of OHIO

P.O. BOX 398704
CINCINNATI, OHIO 45239-8704

Prepared for the

U.S. Department of Energy

OAK RIDGE OPERATIONS OFFICE
Under Contract DE-AC05-86OR21600

FMPC - 2184
INTERNAL SPECIAL

OFFSITE SOILS REMOVAL

by

Gordon J. Brown
Dennis J. Carr

August 1989

FEED MATERIALS PRODUCTION CENTER
WESTINGHOUSE MATERIALS COMPANY of OHIO
P.O. BOX 398704
CINCINNATI, OHIO 45239-8704

Prepared for the
U.S. Department of Energy
OAK RIDGE OPERATIONS OFFICE
Under Contract DE-AC05-86OR21600

Approved: J. P. Hopper
J. P. Hopper, Manager
Environmental Remedial Action Project

Approved: W. A. Weinreich
W. A. Weinreich, Vice President
Manager, FMPC Site Restoration

---------- NOTICE ----------

This Report was prepared as an account of work sponsored by an agency of the United States Government. Neither the United States Government nor any agency thereof, nor any of their employees, nor any of its contractors, subcontractors nor their employees, makes any warranty, express or implied, or assumes any legal liability or responsibility for the accuracy, completeness, or usefulness of any information, apparatus, product, or process disclosed, or, represents that its use would not infringe privately owned rights. The reference herein to any specific commercial product, process, or service, by tradename, trademark, manufacturer, or otherwise, does not necessarily constitute or imply its endorsement, recommendation, or favoring by the United States Government or any agency thereof. The views and opinions of authors expressed herein do not necessarily state or reflect those of the United States Government or any agency thereof.

TABLE of CONTENTS

	Page
Executive Summary	1
Excavation Criteria	
Introduction	5
Background	5
Manhole 180 Removal Action Criteria	6
Technical Justification	8
Conclusion	10
Area Excavated - Contamination Levels	10
Health and Safety Practices	10
Contamination Control	10
Excavation and Soil Disposition	11
Post Excavation Certification Sampling	11
Excavation Site Restoration	12
Reoccurrence Protection	12

ATTACHMENTS

Attachment I -	Results of a Radiological Survey in the Vicinity of Manhole 180
Attachment II -	Results of Radiochemical Analysis of Split Samples from Manhole 180
Attachment III -	Dose to Source Sample Calculations
Attachment IV -	Results of Environmental Pathway Analysis
Attachment V -	Vicinity Map for Manhole 180
Attachment VI -	As-Built Excavation Details, Manhole 180
Attachment VII -	As-Built Outfall Sewer Restoration Certification Sample Locations
Attachment VIII-	Radiological Survey Report, Manhole 180

LIST of TABLES

Table	Description	Page
1	Total Uranium and Total Thorium in Initial Soil Samples	1
2	Chronology of Events and Scheduling Information	3
3	Summary Results of Certification Samples	4
4	NRC Option 1 Guidelines for Uranium and Thorium	7
5	Analytical Results of Certification Samples	11

INTRODUCTION - EXECUTIVE SUMMARY

On April 4th, 1989, Westinghouse Materials Co. of Ohio received a telephone call from a local area resident, who explained that water was overflowing from a manhole located on the Knollman Dairy Farm property. (The Knollman Dairy Farm property is situated such that the effluent discharge line runs under the property).

A response team was dispatched to the area to investigate the situation. The team observed water flowing out of manhole 180, onto the farm property. A water sample was taken (the total uranium concentration for this sample was 2.24 mg/l), and adjustments were made to the water discharge flow rate to discontinue the overflow situation. The manhole cover was then temporarily sealed, using a quickset sealant. The area was allowed to dry, and on April 6th, 1989, eight (8) soil samples were collected by the Operations Safety and Health Department of Westinghouse. The soil samples were analyzed for total uranium and total thorium, utilizing X-ray fluorescence, and the results were reported on May 3rd, 1989. A second set of analysis was performed, by the BrPADAP (2-(Bromo- pyridzo- 5 diethyl amino phenol)) method, to validate the total uranium findings of the first analysis. The results of the analysis of the soil samples are presented in Table I.

TABLE 1

Total Uranium and Total Thorium in Initial Soil Samples

SAMPLE NO.	X-Ray TOTAL U (ppm)	BrPADAP CHECK TEST TOTAL U (ppm)	X-Ray TOTAL Th (ppm)
1	<11	6	<23
2	61	55	<23
3	28	20	<23
4	12	8	<23
5	17	10	25
6	127	116	<23
7	16	7	23
8	27	22	<23

The area around manhole 180 was characterized to assess contamination boundaries and to determine concentration of contaminants associated with the overflow. Split samples were sent to the International Technologies (IT) Laboratory as a quality control measure. The results of the characterization samples can be found in Attachment I (Figure 1.1 and Table 1.1). The results of the split samples sent to the IT Laboratory can be found in Attachment II. The lower limit of detectability for the testing done at the FMPC, by X-ray fluoresence, is 11 ppm and 23 ppm for uranium and thorium respectively. The BrPADAP method provides greater accuracy for the uranium measurements.

These results indicated that the majority of the manhole site was far below the established cleanup criteria (see cleanup criteria section), but there was a small area that was at levels above the criteria. This finding was sufficient to warrant a removal action.

The specific objectives of this removal action were to:

1. Perform any and all necessary repairs to the effluent line, the manhole structures, and the manhole seals/lids to insure integrity of the outfall system, as designed.

2. Remove soils, contaminated with levels of uranium or thorium above criteria levels, from the off-site areas and replace the contaminated soil with clean (uncontaminated) soil.

3. Store the contaminated soil on the FMPC site, in a confined condition, for future treatment and/or disposal.

Table 2 shows the chronology of events surrounding the removal action.

TABLE 2

CHRONOLOGY OF EVENTS and SCHEDULING INFORMATION

April 4th, 1989.....	Received telephone call from area resident reporting the effluent line, manhole 180 discharge incident
April 4th, 1989.....	Water samples taken, manhole temporarily sealed
April 6th, 1989.....	Eight preliminary soil samples taken, analysis begun
May 3rd, 1989.....	Results of soil samples reported to WMCO, DOE, and Knollman Farm owner - DOE Oak Ridge provided with verbal notification and test results
May 11th, 1989.....	Written notification given to DOE Oak Ridge
May 15th, 1989.....	Characterization soil sampling begun - manholes 178, 179, 180 and 181 repaired to prevent further overflow situations
May 23rd, 1989.....	Signs posted around affected areas, warning away persons attempting to access the area
June 11th, 1989.....	Characterization sample results complete
June 15th, 1989.....	Excavation area determined, excavation planned
June 16th, 1989.....	Excavation procedure written, Excavation checklist written
June 19th, 1989.....	Excavation initiated, Excavation completed, Certification sampling completed
June 23th, 1989.....	Certification sampling results completed, Backfill initiated & completed
July 24th, 1989.....	Split sample results received from IT Lab.

Table 3 shows the certification sample results. The four certification samples were taken after the excavation had been completed, but before the area was restored to its original configuration. The results indicate that, based on the criteria used, the cleanup effort was successful. The cleanup criteria used for this removal action is presented in the next section of this report.

TABLE 3

(Values shown are ppm)

Certification Sample No.	TOTAL URANIUM	TOTAL THORIUM
1	18	<23
2	27	<23
3	27	<23
4	<11	<23

EXCAVATION CRITERIA

Introduction

The criteria identified for this removal action were 52 parts per million (ppm) total uranium and/or 46 ppm total thorium. These concentrations were adopted from the NRC Branch Technical Position as presented in the Federal Register on October 23, 1981, and are based on activity levels of 35 pCi/gm (picoCuries per gram) for depleted uranium, and 10 pCi/gm for thorium. Expression of the cleanup criteria for uranium in parts per million is done for convenience and the conversion calculations assume natural equilibrium of the major isotopes of uranium. The criteria conversion calculations, to concentration level in ppm for thorium, are based on evaluations of the relative concentrations of the various isotopes in samples collected at manhole 180 site. The calculations to convert the pCi/gm to ppm were the same as those set forth by Argonne National Laboratory, in their report on dose to source conversion. Their report, titled "Derivation of a Uranium Residual Radioactivity Guideline for the National Guard Armory in Chicago, Illinois", was submitted to the Department of Energy in May, 1987. Attachment III presents a sample calculation of the conversion process.

These criteria were used as removal action cleanup levels pending the development of final residual radioactivity guidelines for the FMPC through the risk assessment process of the ongoing site-wide Remedial Investigation / Feasibility Study (RI/FS). The selected criteria represent a conservative action level which are both protective of public health and the environment, and are consistent with DOE, NRC, and proposed USEPA policies and guidance.

The site-wide RI/FS is being performed at the FMPC for the purpose of selecting remedial action alternatives to address identified environmental concerns at the facility. A critical element of the RI/FS process is the completion of a comprehensive baseline risk assessment to evaluate the potential impacts associated with existing facility conditions and to define cleanup criteria for future remedial actions. Pending the final development and approval of definitive cleanup criteria through the RI/FS process, interim cleanup criteria must be developed to support removal actions. Removal action cleanup criteria must be protective of human health and the environment and support final remedial activities. Part of this project was the development of the removal action cleanup criteria.

Background

The soil characterization program in the vicinity of manhole 180 identified a localized area of soil with above background concentrations of total uranium and total thorium. The maximum concentrations of total uranium and total thorium detected during the characterization at this location were approximately 54 ppm (parts per million) and 24 ppm, respectively. The higher values of 124/116ppm total uranium and 25ppm total thorium, obtained during the initial sampling, were not found during the characterization sampling. This is believed to be the result of a localized area of high fertilizer content, which was disturbed during the characterization sampling process.

Background concentrations for total uranium in the southwestern Ohio area have been estimated to range from 2.2 to 6.5 ppm, assuming natural equilibrium of the major isotopes of uranium (1). The same study identified

Th-232 concentrations ranging from 6.5 to 7.3 ppm.
On June 19, 1989, the FMPC completed the removal of approximately 125 cubic feet of soil from an approximate 64 square foot area immediately adjacent to manhole 180. Confirmatory soil samples were collected following completion of the excavation to provide certification data that the selected cleanup levels were attained at manhole 180. This cleanup activity was authorized by DOE as a "time - critical" removal based on its responsibility as the lead agency for removal actions described in section 300.415 of the proposed rule 40 CFR 300 "National Oil and Hazardous Substance Contingency Plan", 53 FR 51500-51502.

Manhole 180 Removal Action Cleanup Criteria

During the manhole 180 removal action, the FMPC employed cleanup criteria of 35 pCi/g and 10 pCi/g for total uranium and total thorium, respectively. These residual radioactivity guidelines were adopted from the NRC Branch Technical Position as presented in the Federal Register on October 23, 1981. The 35 pCi/g was recommended by the NRC for residual material containing depleted uranium. The guideline for depleted uranium was selected on the basis of isotopic analysis of collected samples from the vicinity of manhole 180. Attachment II lists the isotopic results of the split samples sent to International Technology Laboratories.

In order to provide an effective cleanup criterion consistent with established field and analytical protocols, the activity based cleanup criteria presented in the Branch Technical Position were converted to concentration guidelines. Attachment III presents a sample calculation, which illustrates the conversion technique. A removal action cleanup criterion of 52 ppm of total uranium in soil (dry weight basis) was derived for use at manhole 180 assuming natural equilibrium of the major isotopes of uranium (U-238, U-234). A concentration based cleanup level of 46 ppm total thorium in soil (dry weight basis) was derived based upon an evaluation of the relative concentrations of the major isotopes of thorium (Th-232 and Th-230) in the samples collected at manhole 180. The relative concentrations of thorium isotopes are also presented in Attachment II.

The NRC Branch Technical Position presents five options for the disposal or onsite storage of thorium or uranium wastes from past nuclear operations. Option 1 of the NRC Position paper proposes residual radioactivity guidelines for natural thorium and depleted and enriched uranium for properties with no future land use restrictions (2).

(1) "Determination of Concentrations of Selected Radionuclides in Surface Soil in the U.S."; T. Myrick - B. A. Berven & Fred Haywood, ORNL; Health Physics; Vol. 45 No. 3; September, 1983.

(2) Federal Register; Vol. 46 No. 205, October 23, 1981, p. 52062

The referenced document states as follows:

> "Under this option the activity concentration of the isotopes are set sufficiently low so that no member of the public would be expected to receive in excess of 1 millirad per year to the lung or 3 millirad per year to the bone from inhalation and ingestion under any foreseeable use of the material or property."

Note: millirad is a unit of absorbed dose. The unit millirem is typically used when addressing radiation dose to humans. A millirem, which is a unit of dose accounting for the relative biological damage due to the type of radiation involved, is equivalent to 1 millirad times a quality factor. The quality factor for alpha radiation from sources like uranium is 20.

In addition, the activity concentration guidelines are sufficiently low so that no individual would receive an external exposure in excess of 10 microroentgens per hour above background. Background exposure rates in the southwestern Ohio area range between 7 and 10 microroentgens per hour (1).

Employing these radiation dose guidelines the NRC completed a pathway analysis to determine the residual radioactivity concentrations in soil which would limit dose to the maximally exposed individual to not more than that proposed by the U.S.E.P.A. This pathways model utilized a resident farmer scenario whereby an individual lives on and grows his crops on a large area containing a uniform concentration of the given radionuclides. The scenario also includes the consumption of groundwater from wells located within this area of uniform concentration. Table 3 provides a listing of the residual radioactivity guidelines presented by the NRC for Option 1 in its Branch Technical Position.

TABLE 4

NRC Option 1 Guidelines for Uranium and Thorium

Kind of material	Concentration (pCi/gm)
Natural thorium (Th-232 plus Th-228) if all daughters are present and in equilibrium----------	10
Depleted Uranium----------	35
Enriched Uranium----------	30
Natural Uranium Ores (U-238 plus U-234) if all daughters are present and in equilibrium----------	10

(1) "Determination of Concentrations of Selected Radionuclides in Surface Soil in the U.S."; T. Myrick - B. A. Berven & Fred Haywood, ORNL; Health Physics; Vol. 45 No. 3; September, 1983.

Pathways of exposure evaluated by the NRC included direct radiation from ground surfaces, ingestion of contaminated food, inhalation of suspended radionuclides and drinking contaminated water. The pathways analysis methodology employed by the NRC was consistent with nuclear industry accepted protocols and can be found in detail in Radiological Assessment: Textbook on Environmental Dose Analysis; John E. Till and H. Robert Meyer; NUREG/CR-3332; September, 1983. Attachment IV presents example pathway analysis for two scenarios:

1. Radiation Doses to Man Via Grazing Cow Pathway
2. Radiation Doses to Man Via Food Crop Ingestion Pathway

The dose calculations completed as part of the pathways analysis considered both internal and external exposures resultant from the residual radioactivity. All internal doses were based upon a 50-year dose commitment; that is, the total dose an individual would receive from one year of intake integrated over the next 50 years of his/her life. Exposures were assumed to continue on an annual basis over the life of the individual. Internal dose conversion factors (used for converting internal exposure to dose) were consistent with the International Commission on Radiological Protection (ICRP, Report # 30) guidelines for internal dose conversion.

Technical Justification

Definitive residual radioactivity standards for long lived isotopes such as uranium and thorium have not, as yet, been established by the DOE, NRC or USEPA. To this date definitive guidance on the subject has not been issued by either the ICRP or the International Atomic Energy Agency. USEPA standards (40 CFR 192) have been established for the control of residual radioactivity at designated processing or depository sites under Section 108 of the Uranium Mill Tailings Radiation Control Act of 1978.

This federal regulation establishes a maximum allowable residual radioactivity concentration standard for radium-226 and radium-228 in soil at unrestricted use sites. These standards were developed based upon pathways modeling assuming natural equilibrium of all the daughters of the parent radionuclides uranium-238 and thorium-232. These standards are of limited use at facilities such as the FMPC where processing operations have, for the most part, involved pure uranium and thorium compounds essentially free of radium and its daughters products.

Implementing DOE guidance on 40 CFR 192 provide that the remedial criteria for residual concentrations in soil of all radionuclides other than radium-226 and radium-228 shall be derived by means of an environmental pathways analysis using site specific data.

Such a site specific pathways model is being completed at the FMPC as part of the ongoing site-wide RI/FS. Since such analyses have not been completed at the facility, the residual radioactivity guidelines defined in the 1981 NRC Branch Technical Position paper were adopted for use at the FMPC to support the soils removal action at manhole 180.

These criteria were selected because they represent conservative actions levels which are both protective of human health and the environment and are consistent with proposed USEPA guidance.

As stated above, the risk based activity concentration guidelines presented in the NRC Branch Technical Position paper are set sufficiently low so that no member of the public would receive a radiation dose commitment from the residual radioactivity in excess of 1 millirad per year to the lungs or 3 millirads per year to the bone from inhalation and ingestion, under any foreseeable use of the property. These radiation dose guidelines were recommended by the USEPA for protection against transuranium elements present in the environment as a result of unplanned contamination (3). The current USEPA standards defined in 40 CFR 192.12 for uranium mill tailings remedial activities were developed based upon comparable dose commitments to the maximally exposed individual.

In addition, the NRC guidelines are set sufficiently low so that no member of the public will receive an external dose in excess of 10 microroentgens per hour above background. Current USEPA regulations in 40 CFR 192.12 limit the level of external radiation from residual radioactive materials to twice this level or 20 microroentgens per hour. Thus, the risk based criteria for residual radioactivity concentrations of long half-life radionuclides such as uranium and thorium as defined within the NRC Branch Technical Position provide conservative action levels employing dose commitments which are comparable to current USEPA guidance.

As previously stated, the pathway model employed by NRC in developing its residual radioactivity guidelines utilized a resident farmer scenario. This scenario is based upon an area of sufficient size to allow the individual to reside and grow crops in the uniform concentration of the radionuclides. Applying this scenario to the manhole 180 situation yields an added factor of conservatism to minimize potential exposures due to the extremely small surface areas involved. The maximally exposed individual cannot grow crops or reside entirely within the affected area at manhole 180.

A residual radioactivity criterion of 35 pCi/g of total uranium in soil was recently employed in the cleanup of several private properties in the U. S. The criterion was employed in the cleanup and unrestricted release of properties in the vicinity of the NL Industries uranium fabrication facility in Colonie, New York. Remedial actions were completed at the Colonie site as part of the DOE Formerly Utilized Sites Remedial Action Program (FUSRAP). This criterion was employed as a result of a negotiated agreement between the DOE and the State of New York.

The 35 pCi/g criterion was also employed in the cleanup and unrestricted release of two commercial facilities owned by Aerojet,Inc. These facilities were located in Jonesboro, Tennessee and Compton, California. In both cases the cleanup criteria employed were as a result of a negotiated agreement between the property owner and the respective State authorities.

(3) 42 FR 60956-60959, November 30, 1977

Conclusion

Definitive criteria for residual radioactivity of long half-life radionuclides such as uranium and thorium have not as yet been established by the DOE, NRC, or the USEPA. Current DOE guidance recommends the establishment of uranium and thorium residual radioactivity guidelines through site specific pathway modeling. Site specific pathway modeling is currently underway at the FMPC as part of the ongoing site-wide RI/FS. In order to support the objectives of the removal action at manhole 180, the FMPC adopted the proposed criteria presented in the 1981 NRC Branch Technical Position paper as presented in the Federal Register on October 23, 1981. These criteria have been employed throughout the country in similar situations involving the cleanup of private properties for unrestricted use. The criteria defined within the NRC Branch Technical Position were employed for the manhole 180 removal action as they represent conservative action levels which are both protective of human health and the environment and consistent with proposed USEPA guidance.

AREA EXCAVATED - CONTAMINATION LEVELS

The area excavated during the removal action was approximately 64 square feet (8 ft x 8 ft) located east of and up to manhole 180. Attachments IV & V illustrate the area, with appropriate references. The soil was removed to a depth of approximately 2 ft over most of the area, on a gradient as illustrated in Attachment VI.
The excavation boundaries were set up to center, as closely as possible, the sample point with the high reading (sample point #2) within the surface area of excavation.

HEALTH AND SAFETY PRACTICES

All employees working within the contaminated area were dressed in clean brown coveralls, with the leg ends taped to close off any gaps between skin and garment. The employees also wore safety shoes, safety glasses, gloves, and hard hats. Dust masks were available, but were not required due to the damp soil consistency. All personnel were monitored by a Radiological Services (R.S.) technician, prior to leaving the FMPC.

A photographer and a minicam operator were at the excavation site to record the removal action, in addition to several supervisory personnel. After the excavation was complete, all personnel and equipment were monitored prior to being released from the excavation area, to return to the FMPC.

CONTAMINATION CONTROL

Dust suppression equipment was available, but was not used due to the damp soil consistency. A dump truck, a pickup truck, and a front loader were used during the course of the removal action. All equipment was monitored, by a R.S. technician, prior to being released from the FMPC, for off-site work.

The dump truck bed was lined with plastic, prior to loading the excavated material, and was equipped with a tarpaulin cover which was used to prevent any soil from blowing out of the truck during transport. All excavated material that fell from the front-loader/back-hoe buckets during the excavation process was cleaned up by laborers, and the area was monitored by the R.S. technician to insure that no material was inadvertently left behind. During the return trip to the FMPC the project manager followed the dump truck to insure that no material was spilled during transit. (No material was spilled)

All equipment used during the removal action was monitored by an R.S. technician prior to being released from the excavation area, to return to the FMPC site.

EXCAVATION and SOIL DISPOSITION

Approximately 125 cubic feet of soil was excavated from the area around manhole 180, transported to the FMPC Site, and stabilized in the northwest quadrant of the site.

The excavation was begun with the front scoop of the front-loader. Approximately 90 cubic feet of material was removed from the excavation area, and loaded into the dump truck. When enough material had been removed, the laborers went to work with shovels to remove material from those areas that were inaccessible to the front-loader (an area directly adjacent to the concrete form of the manhole).

The back-hoe section of the front-loader was then used to remove an additional section of material, approximately 30 cubic feet, to obtain the gradient as depicted in Attachment VI, and loaded it into the dump truck. The laborers then went back into the area with shovels to remove the secondary section that was next to the concrete form of the manhole. The Excavated soils were transported to the FMPC site, and placed in storage as indicated previously.

POST EXCAVATION CERTIFICATION SAMPLING

Attachment VII illustrates the position of the certification samples taken right after the excavation was completed. The samples represented the 0 - 6 inch depth of the newly exposed soil. The results of the certification sampling are shown in Table 4:

TABLE 5

(Values shown are ppm)

Certification Sample No.	TOTAL URANIUM	TOTAL THORIUM
1	18	<23
2	27	<23
3	27	<23
4	<11	<23

The information in Table 4 indicates that the levels of uranium in soil in the excavation/study area were successfully reduced to levels below the established removal criteria.

A radiation dose rate test (with a Ludlum Model 19) was run over the area surrounding manhole 180, after the site was restored to its original configuration. The results of that test are presented in Attachment VIII.

On the basis of the results of the certification sampling and the radiation levels, no further excavation is required to meet the criteria employed.

EXCAVATION SITE RESTORATION

The excavated area required approximately 125 cubic feet of soil for the backfill/restoration process. The work was done by Welch Sand and Gravel Incorporated, under a subcontract to the FMPC. The area was seeded as an erosion control measure.

REOCCURRENCE PREVENTION

On May 15th, 1989, FMPC employees repaired manholes 178, 179, 180, and 181 access ways to prevent reoccurrence of the overflow situation. The manhole access frames were excavated, the top of the manhole frame retention bolts were cut off, and the old manhole frames and lids were removed and bagged. The remaining sections of the retention bolts were removed. New retention bolts were set into the holes left by the old bolts, and grouted into place with concrete. After the concrete had hardened, new frames were set into place with a layer of grout between the concrete and the frame. The inside seams, between the concrete of the manhole and the steel of the frame were grouted also. The manhole frames were secured with the newly installed bolts. An "O-ring" inside each frame seals the lid when the lid is in place. The lids were tightly secured to the frame with nuts. The outside base of each manhole frame was grouted to provide further protection for the systems. The frame/lid systems are now fully operational as "pressurized" manholes.

A periodic (monthly) inspection schedule, to be performed by Utilities Department personnel, has been established and will prevent reoccurrence of the deteriorated conditions that ultimately led to the overflow situation. Plans are now being formulated to clean out the section of the effluent line which extends from manhole 180 to the Great Miami River. This action will reduce the resistance to flow within the line, and will consequently reduce back-pressure against the manhole covers and frames.

ATTACHMENT I

Results of a Radiological Survey in the Vicinity of Manhole 180

Figure 1.1
MANHOLE 180
Sample Map

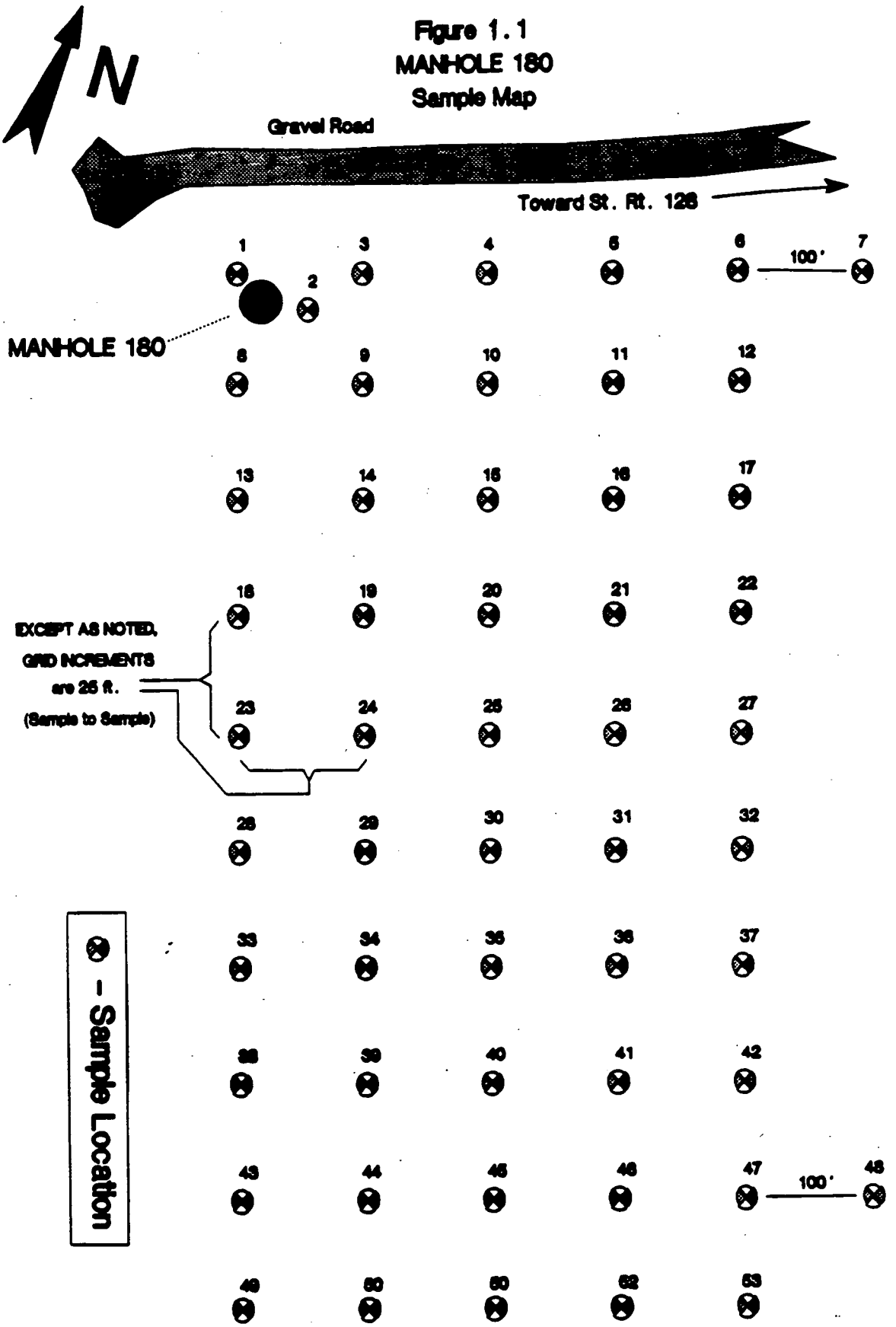

Table 1.1
(values are given as ppm)

Sample Number	TOTAL URANIUM 0-6"	TOTAL URANIUM 6"-12"	TOTAL URANIUM 12"-18"	TOTAL THORIUM 0-6"	TOTAL THORIUM 6"-12"	TOTAL THORIUM 12"-18"
1	<11	<11	<11	<23	<23	<23
2	28	54	28	<23	<23	<23
3	<11	<11	<11	<23	<23	<23
4	<11	<11	<11	<23	<23	<23
5	<11	<11	<11	<23	<23	<23
6	<11	<11	<11	<23	<23	<23
7	<11	<11	<11	<23	<23	<23
8	<11	<11	<11	<23	<23	<23
9	11	<11	<11	<23	<23	<23
10	<11	<11	<11	<23	<23	<23
11	<11	<11	<11	<23	<23	<23
12	<11	<11	<11	<23	<23	<23
13	12	<11	<11	<23	<23	<23
14	<11	<11	<11	<23	<23	<23
15	<11	<11	<11	<23	<23	<23
16	<11	<11	<11	<23	<23	<23
17	<11	<11	<11	<23	<23	<23
18	<11	<11	<11	<23	<23	<23
19	<11	<11	<11	<23	<23	<23
20	16	<11	<11	<23	<23	<23
21	15	<11	<11	<23	23	<23
22	<11	<11	<11	<23	<23	<23
23	<11	<11	<11	<23	<23	<23
24	17	16	<11	<23	<23	<23
25	<11	<11	<11	<23	<23	<23
26	<11	<11	<11	<23	<23	<23
27	<11	<11	<11	<23	<23	<23
28	<11	<11	<11	<23	<23	<23
29	18	17	<11	<23	24	<23
30	<11	<11	<11	<23	<23	<23
31	<11	<11	<11	<23	<23	<23
32	<11	<11	<11	<23	<23	24
33	<11	<11	<11	<23	<23	<23
34	19	17	<11	23	<23	<23
35	<11	<11	17	<23	24	27
36	<11	<11	<11	<23	23	<23
37	<11	<11	<11	<23	<23	<23
38	<11	<11	<11	<23	<23	<23
39	16	19	<11	23	24	<23
40	<11	<11	<11	<23	<23	<23
41	<11	<11	<11	<23	<23	<23
42	<11	<11	<11	<23	<23	<23
43	<11	<11	<11	<23	<23	24
44	16	<11	<11	24	<23	<23
45	<11	<11	<11	<23	<23	<23

Table 1.1 (cont'd)
(values are given as ppm)

Sample Number	TOTAL URANIUM 0-6"	TOTAL URANIUM 6"-12"	TOTAL URANIUM 12"-18"	TOTAL THORIUM 0-6"	TOTAL THORIUM 6"-12"	TOTAL THORIUM 12"-18"
46	<11	<11	<11	<23	<23	<23
47	<11	<11	<11	<23	<23	<23
48	<11	<11	<11	<23	<23	<23
49	<11	<11	<11	<23	<23	<23
50	<11	16	<11	<23	24	<23
51	<11	<11	<11	<23	<23	<23
52	<11	<11	<11	<23	<23	<23
53	<11	<11	<11	<23	<23	<23

ATTACHMENT II

Results of Radiochemical Analysis of Split Samples from Manhole 180

IT Lab Split Sample Results

(results are given as ppm)

Sample Number	TOTAL URANIUM			TOTAL THORIUM		
	0-6"	6"-12"	12"-18"	0-6"	6"-12"	12"-18"
3	5.5			2.1		
7	7.8			9.3		
10			4.3			3.2
14		7.6			5.1	
18	7.6			6.3		
21		5.5			7.9	
25		6.3			7.0	
29	11.9			10.0		
32		4.0			12.6	
36		4.1			7.8	
43			3.3			7.9
47	3.6			8.4		
51	10.2			8.5		

Page 1 ITRSL Oak Ridge REPORT Work Order # R9-06-063
Received: 06/08/89 07/07/89 12:23:02

REPORT ADVANCED SCIENCES, INC.
TO P.O. BOX 475
ROSS, OH 45061-0475

ATTEN CINDY DANIELS

PREPARED IT/RADIOLOGICAL SCIENCES LAB.
BY 1550 BEAR CREEK ROAD
OAK RIDGE, TN 37831

ATTEN ERS
PHONE 615-482-9707

CERTIFIED BY James T. Harvey

CONTACT JIM HARVEY

CLIENT RI FS FER SAMPLES 23
COMPANY ADVANCED SCIENCES, INC.
FACILITY 10845 HAMILTON CLEVES ROAD

WORK ID SOIL SAMPLES
TAKEN
TRANS
TYPE
P.O. # 866A21602-04 602.09.02.04
INVOICE under separate cover

SAMPLE IDENTIFICATION

01	66394	- 06146
02	66395	06158
03	66396	06169
04	66397	06180
05	66398	06191
06	66399	06202
07	66400	06213
08	66401	06224
09	66402	06235
10	66403	06246
11	66404	06263
12	66405	06278
13	66406	06290
14	66407	06307
15	66408	06310
16	66409	06322
17	66410	06326
18	66411	06344
19	66412	06349
20	66413	06368
21	66414	06375
22	66415	06381
23	66416	06389

TEST CODES and NAMES used on this report

GS	GAMMA SPEC
TC99	TC-99
TH228	TH-228
TH230	TH-230
TH232	TH-232
THTOTA	THORIUM TOTAL
U234	U-234
U235	U-235,U-236
U238	U-238
UTOTS	URANIUM TOTAL

Page 2
Received: 06/08/89

ITRSL Oak Ridge REPORT
Results by Sample

Work Order # R9-06-063

SAMPLE ID 66394 FRACTION 01A TEST CODE GS NAME GAMMA SPEC
Date & Time Collected 05/11/89 Category 45229

UNITS pCi/g
WRTN 07/07/89

VERIFIED BY SDL

GAMMA SPEC	RESULT	2-SIGMA	OTHER	RESULT	2-SIGMA
U-TOTAL *	5.5	3.0	TC-99	<0.9	
			U-234	0.8	0.2
*Units-ug/g			U-235/236	<0.6	
			U-238	0.6	0.2
			TH-228	1.2	0.4
			TH-230	1.4	0.4
			TH-232	<0.6	
			TH-TOTAL *	2.1	1.5
			*Units-ug/g		

SAMPLE ID 66395 FRACTION 02A TEST CODE GS NAME GAMMA SPEC
Date & Time Collected 05/12/89 Category 45229

UNITS pCi/g
WRTN 07/07/89

VERIFIED BY SDL

GAMMA SPEC	RESULT	2-SIGMA	OTHER	RESULT	2-SIGMA
U-TOTAL *	7.8	1.7	TC-99	<0.9	
			U-234	1.7	0.4
*Units-ug/g			U-235/236	<0.6	
			U-238	2.6	0.6
			TH-228	1.6	0.5
			TH-230	2.9	0.7
			TH-232	1.0	0.4
			TH-TOTAL *	9.3	3.3
			*Units-ug/g		

Page 3 ITRSL Oak Ridge REPORT Work Order # R9-06-063
Received: 06/08/89 Results by Sample

SAMPLE ID 66396 FRACTION 03A TEST CODE GS NAME GAMMA SPEC
Date & Time Collected 05/12/89 Category 45229

UNITS pCi/g VERIFIED BY SDL
WRTN 07/07/89

GAMMA SPEC	RESULT	2-SIGMA	OTHER	RESULT	2-SIGMA
U-TOTAL *	4.3	2.7	TC-99	<0.9	
			U-234	0.9	0.2
*Units-ug/g			U-235/236	<0.6	
			U-238	0.7	0.2
			TH-228	<0.6	
			TH-230	1.3	0.4
			TH-232	<0.6	
			TH-TOTAL *	3.2	2.0

*Units-ug/g

SAMPLE ID 66397 FRACTION 04A TEST CODE GS NAME GAMMA SPEC
Date & Time Collected 05/12/89 Category 45229

UNITS pCi/g VERIFIED BY SDL
WRTN 07/07/89

GAMMA SPEC	RESULT	2-SIGMA	OTHER	RESULT	2-SIGMA
U-TOTAL *	7.6	3.1	TC-99	1.1	0.4
			U-234	1.7	0.3
*Units-ug/g			U-235/236	<0.6	
			U-238	2.0	0.3
			TH-228	1.0	0.3
			TH-230	1.8	0.5
			TH-232	<0.6	
			TH-TOTAL *	5.1	2.2

*Units-ug/g

Page 4
Received: 06/08/89

ITRSL Oak Ridge REPORT
Results by Sample

Work Order # R9-06-063

SAMPLE ID 66398 FRACTION 05A TEST CODE GS NAME GAMMA SPEC
Date & Time Collected 05/15/89 Category 45229

UNITS pCi/g
WRTN 07/07/89

VERIFIED BY SDL

GAMMA SPEC	RESULT	2-SIGMA	OTHER	RESULT	2-SIGMA
U-TOTAL *	7.6	3.5	TC-99	<0.9	
			U-234	2.6	0.4
*Units-ug/g			U-235/236	<0.6	
			U-238	2.6	0.4
			TH-228	0.8	0.3
			TH-230	1.6	0.4
			TH-232	0.7	0.2
			TH-TOTAL *	6.3	2.2

*Units-ug/g

SAMPLE ID 66399 FRACTION 06A TEST CODE GS NAME GAMMA SPEC
Date & Time Collected 05/15/89 Category 45229

UNITS pCi/g
WRTN 07/07/89

VERIFIED BY SDL

GAMMA SPEC	RESULT	2-SIGMA	OTHER	RESULT	2-SIGMA
U-TOTAL *	5.5	3.1	TC-99	<0.9	
			U-234	1.5	0.3
*Units-ug/g			U-235/236	<0.6	
			U-238	1.8	0.3
			TH-228	1.7	0.5
			TH-230	2.1	0.6
			TH-232	0.9	0.3
			TH-TOTAL *	7.9	3.0

*Units-ug/g

Page 5 ITRSL Oak Ridge REPORT Work Order # R9-06-063
Received: 06/08/89 Results by Sample

SAMPLE ID 66400 FRACTION 07A TEST CODE GS NAME GAMMA SPEC
Date & Time Collected 05/15/89 Category 45229

UNITS pCi/g VERIFIED BY SDL
WRTN 07/07/89

GAMMA SPEC	RESULT	2-SIGMA	OTHER	RESULT	2-SIGMA
U-TOTAL *	6.3	2.9	TC-99	<0.9	
			U-234	1.7	0.4
*Units-ug/g			U-235/236	<0.6	
			U-238	1.3	0.3
			TH-228	1.0	0.3
			TH-230	2.3	0.5
			TH-232	0.8	0.3
			TH-TOTAL *	7.0	2.6

*Units-ug/g

SAMPLE ID 66401 FRACTION 08A TEST CODE GS NAME GAMMA SPEC
Date & Time Collected 05/15/89 Category 45229

UNITS pCi/g VERIFIED BY SDL
WRTN 07/07/89

GAMMA SPEC	RESULT	2-SIGMA	OTHER	RESULT	2-SIGMA
U-TOTAL *	11.9	4.0	TC-99	1.5	0.5
			U-234	2.8	0.5
*Units-ug/g			U-235/236	<0.6	
			U-238	3.5	0.6
			TH-228	1.2	0.4
			TH-230	2.4	0.6
			TH-232	1.1	0.4
			TH-TOTAL *	10.0	3.2

*Units-ug/g

Page 6 ITRSL Oak Ridge REPORT Work Order # R9-06-063
Received: 06/08/89 Results by Sample

SAMPLE ID 66402 FRACTION 09A TEST CODE GS NAME GAMMA SPEC
Date & Time Collected 05/15/89 Category 45229

UNITS pCi/g VERIFIED BY SDL
WRTN 07/07/89

GAMMA SPEC	RESULT	2-SIGMA	OTHER	RESULT	2-SIGMA
U-TOTAL *	4.0	3.2	TC-99	<0.9	
			U-234	1.5	0.3
*Units-ug/g			U-235/236	<0.6	
			U-238	1.4	0.3
			TH-228	1.1	0.3
			TH-230	2.6	0.5
			TH-232	1.4	0.4
			TH-TOTAL *	12.6	3.2
			*Units-ug/g		

SAMPLE ID 66403 FRACTION 10A TEST CODE GS NAME GAMMA SPEC
Date & Time Collected 05/16/89 Category 45229

UNITS pCi/g VERIFIED BY SDL
WRTN 07/07/89

GAMMA SPEC	RESULT	2-SIGMA	OTHER	RESULT	2-SIGMA
U-TOTAL *	4.1	3.2	TC-99	<0.9	
			U-234	1.8	0.5
*Units-ug/g			U-235/236	<0.6	
			U-238	1.8	0.5
			TH-228	1.2	0.4
			TH-230	2.1	0.6
			TH-232	0.9	0.3
			TH-TOTAL *	7.8	3.0
			*Units-ug/g		

Page 7
Received: 06/08/89

ITRSL Oak Ridge REPORT
Results by Sample

Work Order # R9-06-063

SAMPLE ID 66404 FRACTION 11A TEST CODE GS NAME GAMMA SPEC
Date & Time Collected 05/16/89 Category 45227

UNITS pCi/g
WRTN 07/07/89

VERIFIED BY SDL

GAMMA SPEC	RESULT	2-SIGMA	OTHER	RESULT	2-SIGMA
U-TOTAL *	3.3	2.5	TC-99	<0.9	
			U-234	1.1	0.4
*Units-ug/g			U-235/236	<0.6	
			U-238	1.1	0.4
			TH-228	1.4	0.4
			TH-230	2.2	0.5
			TH-232	0.9	0.3
			TH-TOTAL *	7.9	2.8

*Units-ug/g

SAMPLE ID 66405 FRACTION 12A TEST CODE GS NAME GAMMA SPEC
Date & Time Collected 05/16/89 Category 45227

UNITS pCi/g
WRTN 07/07/89

VERIFIED BY SDL

GAMMA SPEC	RESULT	2-SIGMA	OTHER	RESULT	2-SIGMA
U-TOTAL *	3.6	2.6	TC-99	<0.9	
			U-234	1.6	0.4
*Units-ug/g			U-235/236	<0.6	
			U-238	1.5	0.3
			TH-228	1.4	0.4
			TH-230	2.6	0.5
			TH-232	0.9	0.3
			TH-TOTAL *	8.4	2.7

*Units-ug/g

Page 8
Received: 06/08/89

ITRSL Oak Ridge REPORT
Results by Sample

Work Order # R9-06-063

SAMPLE ID 66406 FRACTION 13A TEST CODE GS NAME GAMMA SPEC
Date & Time Collected 05/16/89 Category 45227

UNITS pCi/g
WRTN 07/07/89

VERIFIED BY SDL

GAMMA SPEC	RESULT	2-SIGMA	OTHER	RESULT	2-SIGMA
U-TOTAL *	10.2	3.8	TC-99	1.0	0.4
			U-234	2.9	0.5
*Units-ug/g			U-235/236	<0.6	
			U-238	2.9	0.5
			TH-228	0.9	0.3
			TH-230	2.25	0.6
			TH-232	0.9	0.3
			TH-TOTAL *	8.5	3.1

*Units-ug/g

SAMPLE ID 66407 FRACTION 14A TEST CODE GS NAME GAMMA SPEC
Date & Time Collected 05/17/89 Category 45227

UNITS pCi/g
WRTN 07/07/89

VERIFIED BY SDL

GAMMA SPEC	RESULT	2-SIGMA	OTHER	RESULT	2-SIGMA
U-TOTAL *	11.9	3.8	TC-99	1.5	0.4
			U-234	3.5	0.6
*Units-ug/g			U-235/236	<0.6	
			U-238	4.0	0.6
			TH-228	1.1	0.3
			TH-230	2.0	0.4
			TH-232	0.7	0.2
			TH-TOTAL *	6.4	1.9

*Units-ug/g

Page 9 ITRSL Oak Ridge REPORT Work Order # R9-06-063
Received: 06/08/89 Results by Sample

SAMPLE ID 66408 FRACTION 15A TEST CODE GS NAME GAMMA SPEC
Date & Time Collected 05/17/89 Category 45227

UNITS pCi/g VERIFIED BY SDL
WRTN 07/07/89

GAMMA SPEC	RESULT	2-SIGMA	OTHER	RESULT	2-SIGMA
U-TOTAL *	6.9	2.5	TC-99	1.6	0.5
			U-234	2.2	0.4
*Units-ug/g			U-235/236	<0.6	
			U-238	2.3	0.4
			TH-228	1.0	0.3
			TH-230	2.0	0.5
			TH-232	0.9	0.3
			TH-TOTAL *	8.5	2.8

*Units-ug/g

SAMPLE ID 66409 FRACTION 16A TEST CODE GS NAME GAMMA SPEC
Date & Time Collected 05/17/89 Category 45227

UNITS pCi/g VERIFIED BY SDL
WRTN 07/07/89

GAMMA SPEC	RESULT	2-SIGMA	OTHER	RESULT	2-SIGMA
U-TOTAL *	13.0	3.4	TC-99	<0.9	
			U-234	3.3	0.6
*Units-ug/g			U-235/236	<0.6	
			U-238	3.4	0.6
			TH-228	1.1	0.3
			TH-230	2.3	0.5
			TH-232	1.0	0.3
			TH-TOTAL *	9.3	2.8

*Units-ug/g

SAMPLE ID 66410 FRACTION 17A TEST CODE GS NAME GAMMA SPEC
Date & Time Collected 05/17/89 Category 45227

UNITS pCi/g VERIFIED BY SDL
WRTN 07/07/89

GAMMA SPEC	RESULT	2-SIGMA	OTHER	RESULT	2-SIGMA
U-TOTAL *	3.7	3.3	TC-99	<0.9	
			U-234	1.0	0.2
*Units-ug/g			U-235/236	<0.6	
			U-238	1.0	0.2
			TH-228	0.7	0.3
			TH-230	1.3	0.4
			TH-232	0.8	0.3
			TH-TOTAL *	7.2	2.7

*Units-ug/g

SAMPLE ID 66411 FRACTION 18A TEST CODE GS NAME GAMMA SPEC
Date & Time Collected 05/22/89 Category 45227

UNITS pCi/g VERIFIED BY SDL
WRTN 07/07/89

GAMMA SPEC	RESULT	2-SIGMA	OTHER	RESULT	2-SIGMA
U-TOTAL *	14.4	3.9	TC-99	<0.9	
			U-234	4.4	0.7
*Units-ug/g			U-235/236	<0.6	
			U-238	4.3	0.7
			TH-228	1.1	0.3
			TH-230	1.6	0.4
			TH-232	0.7	0.3
			TH-TOTAL *	5.9	2.3

*Units-ug/g

Page 11
Received: 06/08/89

ITRSL Oak Ridge REPORT
Results by Sample

Work Order # R9-06-063

SAMPLE ID 66412 FRACTION 19A TEST CODE GS NAME GAMMA SPEC
Date & Time Collected 05/22/89 Category 45227

UNITS pCi/g
WRTN 07/07/89

VERIFIED BY SDL

GAMMA SPEC	RESULT	2-SIGMA	OTHER	RESULT	2-SIGMA
U-TOTAL *	3.0	2.4	TC-99	<0.9	
			U-234	1.3	0.3
*Units-ug/g			U-235/236	<0.6	
			U-238	1.3	0.3
			TH-228	1.6	0.4
			TH-230	1.6	0.4
			TH-232	1.1	0.3
			TH-TOTAL *	10.0	2.7

*Units-ug/g

SAMPLE ID 66413 FRACTION 20A TEST CODE GS NAME GAMMA SPEC
Date & Time Collected 05/19/89 Category 45227

UNITS pCi/g
WRTN 07/07/89

VERIFIED BY SDL

GAMMA SPEC	RESULT	2-SIGMA	OTHER	RESULT	2-SIGMA
U-TOTAL *	11.2	3.1	TC-99	<0.9	
			U-234	3.9	0.6
*Units-ug/g			U-235/236	<0.6	
			U-238	3.8	0.6
			TH-228	1.2	0.3
			TH-230	2.7	0.5
			TH-232	0.8	0.2
			TH-TOTAL *	7.5	1.9

*Units-ug/g

SAMPLE ID 66414 FRACTION 21A TEST CODE GS NAME GAMMA SPEC
Date & Time Collected 05/19/89 Category 45230

UNITS pCi/g VERIFIED BY SDL
WRTN 07/07/89

GAMMA SPEC	RESULT	2-SIGMA	OTHER	RESULT	2-SIGMA
U-TOTAL *	12.1	3.9	TC-99	<0.9	
			U-234	3.4	0.5
*Units-ug/g			U-235/236	<0.6	
			U-238	3.3	0.5
			TH-228	0.9	0.2
			TH-230	2.2	0.4
			TH-232	0.9	0.2
			TH-TOTAL *	7.7	2.1

*Units-ug/g

SAMPLE ID 66415 FRACTION 22A TEST CODE GS NAME GAMMA SPEC
Date & Time Collected 05/19/89 Category 452340

UNITS pCi/g VERIFIED BY SDL
WRTN 07/07/89

GAMMA SPEC	RESULT	2-SIGMA	OTHER	RESULT	2-SIGMA
U-TOTAL *	7.8	3.0	TC-99	<0.9	
			U-234	2.6	0.4
*Units-ug/g			U-235/236	<0.6	
			U-238	2.8	0.5
			TH-228	1.0	0.3
			TH-230	1.6	0.4
			TH-232	<0.6	
			TH-TOTAL *	4.6	2.2

*Units-ug/g

ITRSL Oak Ridge REPORT Work Order # R9-06-063
Results by Sample

SAMPLE ID 66416 FRACTION 23A TEST CODE GS NAME GAMMA SPEC
Date & Time Collected 05/19/89 Category 452340

UNITS pCi/g VERIFIED BY SDL
WRTN 07/07/89

GAMMA SPEC	RESULT	2-SIGMA	OTHER	RESULT	2-SIGMA
U-TOTAL *	4.7	2.7	TC-99	<0.9	
			U-234	1.3	0.3
*Units-ug/g			U-235/236	<0.6	
			U-238	1.6	0.3
			TH-228	0.8	0.3
			TH-230	1.9	0.4
			TH-232	0.6	0.2
			TH-TOTAL *	5.8	2.2

*Units-ug/g

ATTACHMENT III

Dose to Source
Sample Calculations

CALCULATION OF URANIUM SPECIFIC ACTIVITY

The calculation of the specific activity of uranium requires both the analysis of U-235 (wt %) and the analysis of uranium (ppm). From 10 CFR 20, the specific activity of uranium is

$$\text{U Specific Activity} = (0.4 + 0.38E + 0.0034E^2)(1\times10^{-6}) \quad \text{Ci/gU}$$

where "E" is the wt % U-235 (U basis).

$$1 \text{ pCi} = 1 \times 10^{-12} \text{ Ci}$$

$$\text{U Specific Activity} = \frac{(0.4 + 0.38E + 0.0034E^2)(1\times10^{-6})}{(1\times10^{-12} \text{ Ci/pCi})} \quad \text{Ci/gU}$$

$$\text{U Specific Activity} = (0.4 + 0.38E + 0.0034E^2)(1\times10^{6}) \quad \text{pCi/gU}$$

If a sample contains "X" ppm of uranium, the uranium activity of the sample is given by

$$X \text{ ppm} = X \text{ ugU/g sample} = X \times 10^{-6} \text{ gU/g sample}$$

$$\boxed{\text{U Specific Activity} = (X \text{ ppm})(0.4 + 0.38E + 0.0034E^2) \quad \text{pCi/g sample}}$$

Example: X = 50 ppm , E = 0.73 wt % U-235

$$\text{U Specific Activity} = (50)[0.4 + (0.38)(0.73) + (0.0034)(0.73)^2]$$

$$\text{U Specific Activity} = 34 \quad \text{pCi/g sample}$$

CONVERSION OF Th-232 ppm → pCi/g

$1\ \mu g\ Th\text{-}232 = 0.0040\ d/s = 0.24\ d/m$

$1\ ppm\ Total\ Th \cong 1\ \mu g\ Th\text{-}232/g\ Sample$

$1\ ppm\ Total\ Th \cong 0.24\ d/m\text{-}g\ Sample$

Assume a sample measures 'X' ppm of total Th/g sample

then, the specific activity "A" is

$$A \cong 0.24(X_{ppm})\ d/m\text{-}g\ Sample$$

$1\ pCi = 2.22\ d/m$

$$\boxed{A \cong \frac{0.24X}{2.22} \cong 0.108(X)\ pCi/g\ Sample}$$

PPM

Natural Th contains:

$$Th\text{-}232 = 1.000 \times 10^{6}\ ppm$$

$$Th\text{-}228 = 1.333 \times 10^{-4}\ ppm$$

Activity due to Th-232 and Th-228:

If a sample contains 10 ppm of total Th, then

Th-228 Specific Activity = (2)(0.24) = 2.4 d/m-g sample

1 μg Th-228 = 3.040×10^7 d/s = 1.824×10^9 d/m

Th-228 Sample Content = $(10\ ppm)\dfrac{(1.333 \times 10^{-4})}{(1.000 \times 10^6)} = 1.333 \times 10^{-9}$ ppm

Th-228 Specific Activity = $(1.333 \times 10^{-9})(1.824 \times 10^9)$

" " " = 2.4314 d/m-g sample

Total Th Sample Specific Activity = (2.4 + 2.4314)

" " " " " = 4.8314 d/m-g Sample

" " " " = $\dfrac{4.8314}{2.22}$ = $\boxed{2.1763\ pCi/g\ Sample}$

Note: Although the Th-225/Th-232 wt ratio is equal to 1.333×10^{-10} in natural thorium, the activity ratio is approximately equal to 1

Th-225/Th-232 Activity Ratio = $\dfrac{(1.824 \times 10^9\ d/m\text{-}\mu g\ Th\text{-}228)(1.333 \times 10^{-4}\ \mu g)}{(0.24\ d/m\text{-}\mu g\ Th\text{-}232)(1.000 \times 10^6\ \mu g)} = 1.013$

MAXIMUM CONCENTRATION IN SOIL

05/30/89

	ppm (sample basis)	
	Category 1	Category 2
Depleted Uranium (0.20 wt %)	74	210
Natural Uranium (0.71 wt %) (without daughters)	45	149
Enriched Uranium (>0.71 wt %)	45	149
Natural Uranium Ore (0.71 wt %) (with daughters)	15	15
Natural Thorium (with daughters)	46	230

ATTACHMENT IV

Results of Environmental Pathway Analysis

RADIATION DOSES TO MAN VIA GRAZING COW PATHWAY

By:

John R. Frazier, Ph.D., CHP
John W. Poston, Jr., M.S., B.S.

July 18, 1989

URANIUM IN SOIL ——————> DOSE TO MAN

Potential Pathways to Man

- External exposure
- Inhalation of resuspended soil
- Ingestion of soil
- Ingestion of vegetation grown in soil
- Ingestion of meat from grazing animals
- Ingestion of milk from grazing animals
- Ingestion of dairy products
- Ingestion of poultry
- Ingestion of eggs
- •
- •
- •

U in Soil —> Grazing Cow —> Dose to Man

	Ingestion of forage by cow	->	U in -> meat	Ingestion of meat by man	->	
U in soil ->						Dose to man
	Ingestion of soil by cow	->	U in -> milk	Ingestion of milk by man	->	

Meat $C_{soil} \times [f_{s->f} \times I_f + I_s] \times f_{meat} \times I_{meat} \times DCF = CEDE$

Milk $C_{soil} \times [f_{s->f} \times I_f + I_s] \times f_{milk} \times I_{milk} \times DCF = CEDE$

Definition of Pathway Parameters

C_{soil} = Concentration of total uranium in soil [pCi/g]

$f_{s->f}$ = Transfer coefficient for uranium from soil to forage [pCi/kg forage per pCi/g soil]

I_f = Rate of ingestion of forage by cow [kg/day]

I_s = Rate of ingestion of soil by cow [g/day]

f_{meat} = Transfer coefficient for uranium from intake to meat [pCi/kg meat per pCi/day]

I_{meat} = Rate of ingestion of meat by man [kg/year]

f_{milk} = Transfer coefficient for uranium from intake to milk [pCi/l milk per pCi/day]

I_{milk} = Rate of ingestion of milk by man [l/year]

DCF = Dose conversion factor for ingestion of uranium [mrem/pCi]

CEDE = 50-year Committed Effective Dose Equivalent [mrem]

Assumed Values for Pathway Parameters

PARAMETER	VALUE*	REFERENCE
$f_{s->f}$	2.5 pCi/kg per pCi/g	NCRP Commentary No.3
I_f	50 kg/day	Reg. Guide 1.109
I_s	500 g/day	Zach & Mayoh (HP 1984)
f_{meat}	5.0×10^{-3} pCi/kg per pCi/day	NCRP Commentary No. 3
I_{meat}	110 kg/yr (max adult)	Reg. Guide 1.109
f_{milk}	6.0×10^{-4} pCi/l per pCi/day	NCRP Commentary No. 3
I_{milk}	400 l/yr (max teen)	Reg guide 1.109

- Values are the most conservative (i.e. give highest calculated dose) found in the literature.

Dose Conversion Factor (DCF)
For Ingestion of Uranium with Natural Isotopic Ratios

50-Year Committed Effective Dose Equivalent (CEDE)

Radionuclide	DCF	Fraction of Total Activity
U-234 (Soluble)	2.6×10^{-4} mrem/pCi	0.49
U-235 (Soluble)	2.5×10^{-4} mrem/pCi	0.02
U-238 (Soluble)	2.3×10^{-4} mrem/pCi	0.49

$$DCF = (2.6 \times 10^{-4} \times 0.49) + (2.5 \times 10^{-4} \times 0.02) + (2.3 \times 10^{-4} \times 0.49)$$

$$DCF = 1.3 \times 10^{-4} + 0.05 \times 10^{-4} + 1.1 \times 10^{-4}$$

$$DCF = 2.5 \times 10^{-4} \text{ mrem/pCi}$$

Meat	C_{soil} x (8.6 x 10^{-2} mrem/pCi/g-soil)	= CEDE
Milk	C_{soil} x (3.8 x 10^{-2} mrem/pCi/g-soil)	= CEDE
Meat + Milk	C_{soil} x (0.12 mrem/pCi/g-soil)	= CEDE

Examples:

For C_{soil} = 35 pCi/g, CEDE = 4.2 mrem

For CEDE = 5 mrem, C_{soil} = 42 pCi/g

GRAZING COW PATHWAY

-Calculated Concentration of Uranium in Meat (assuming 35 pCi/g soil)

Concentration in Meat $= C_{soil} \times [f_{s->f} \times I_f + I_s] \times f_{meat}$

$= 110$ pCi/kg

or

$= 0.11$ pCi/g

-Measured Concentration of Uranium in Meat

Concentration In Meat < LLD

GRAZING COW PATHWAY

-Calculated Concentration of Uranium in Milk (assuming 35 pCi/g soil)

Concentration in Milk $= C_{soil} \times [f_{s->f} \times I_f + I_s] \times f_{milk}$

$= 13.$ pCi/l

-Measured Concentration of Uranium in Milk

Concentration in Milk < 0.7 pCi/l

REFERENCES

National Council on Radiation Protection and Measurements. Screening Techniques for Determining Compliance With Environmental Standards. Bethesda, MD:NCRP; NCRP Commentary No. 3; March 1986.

U.S. Department of Energy. Internal Dose Conversion Factors for Calculation of Dose to the Public. Washington, DC:U.S. Government Printing Office; DOE/EH-0071; July 1988.

U.S. Nuclear Regulatory Commission. Calculation of Annual Doses to Man from Routine Releases of Reactor Effluents for Evaluating Compliance with 10 CFR 50, Appendix I. Washington, DC:U.S. Government Printing Office; Regulatory Guide 1.109, Revision 1; 1977.

Zach, R.; Mayoh, K.R. "Soil Ingestion by Cattle: A Neglected Pathway". Health Physics 46:426-431; 1984.

FIXED IN ORIG

RADIATION DOSES TO MAN
VIA FOOD CROP INGESTION PATHWAY

By:

John R. Frazier, Ph.D., CHP
John W. Poston, Jr., M.S., B.S.

July 18, 1989

URANIUM IN SOIL ——————> DOSE TO MAN

Potential Pathways to Man

- External exposure
- Inhalation of resuspended soil
- Ingestion of soil
- Ingestion of vegetation grown in soil
- Ingestion of meat from grazing animals
- Ingestion of milk from grazing animals
- Ingestion of dairy products
- Ingestion of poultry
- Ingestion of eggs
- •
- •
- •

U in Soil —> Food Crops —> Dose to Man

U in Soil —> Uptake by Edible Portions of Plant —> Ingestion of Plant By Man —> Dose to Man

$$C_{soil} \times f_{s->c} \times I_c \times DCF = CEDE$$

DEFINITION OF PATHWAY PARAMETERS

C_{soil} = Concentration of total uranium in soil [pCi/g].

$f_{s->c}$ = Transfer coefficient for uranium from soil to edible portions of food crops [pCi/kg - crop per pCi/g - soil].

I_c = Rate of ingestion of food crops by man [kg/year].

DCF = Dose conversion factor for ingestion of uranium [mrem/pCi].

CEDE = 50-year committed effective dose equivalent [mrem].

ASSUMED VALUES FOR PATHWAY PARAMETERS

PARAMETER	VALUE	REFERENCE
$f_{s->c}$	9.0 pCi/kg per pCi/g	NCRP No. 76
I_c	630 kg/year (max teen)	Reg. Guide 1.109
DCF	2.5×10^{-4} mrem/pCi	DOE/EH -- 0071

CROP INGESTION PATHWAY

- Calculated Concentrations of Uranium in Food Crops (assuming 35 pCi/g soil)

  Concentration in Crops $= C_{soil} \times f_{s->c}$

  $= 0.32$ pCi/g

- Measured Concentrations of Uranium in Food Crops

  Concentrations in Food Crops < 0.005 pCi/g (potatoes)

$$C_{soil} \times (1.4 \text{ mrem/pCi/g - soil}) = \text{CEDE}$$

EXAMPLE

For $C_{soil} = 35$ pCi/g, CEDE = 49 mrem

ATTACHMENT V

Vicinity Map for Manhole 180

287

55

WESTINGHOUSE MAT'LS CO. OF OHIO
FERNALD, OHIO
FEED MATERIALS PRODUCTION CENTER
U.S. DEPARTMENT OF ENERGY

OUTFALL SEWER RESTORATION
SAMPLING GRID LOCATIONS

00X-5500-G-02504 | 0

ATTACHMENT VI

As-Built Excavation Details
Manhole 180

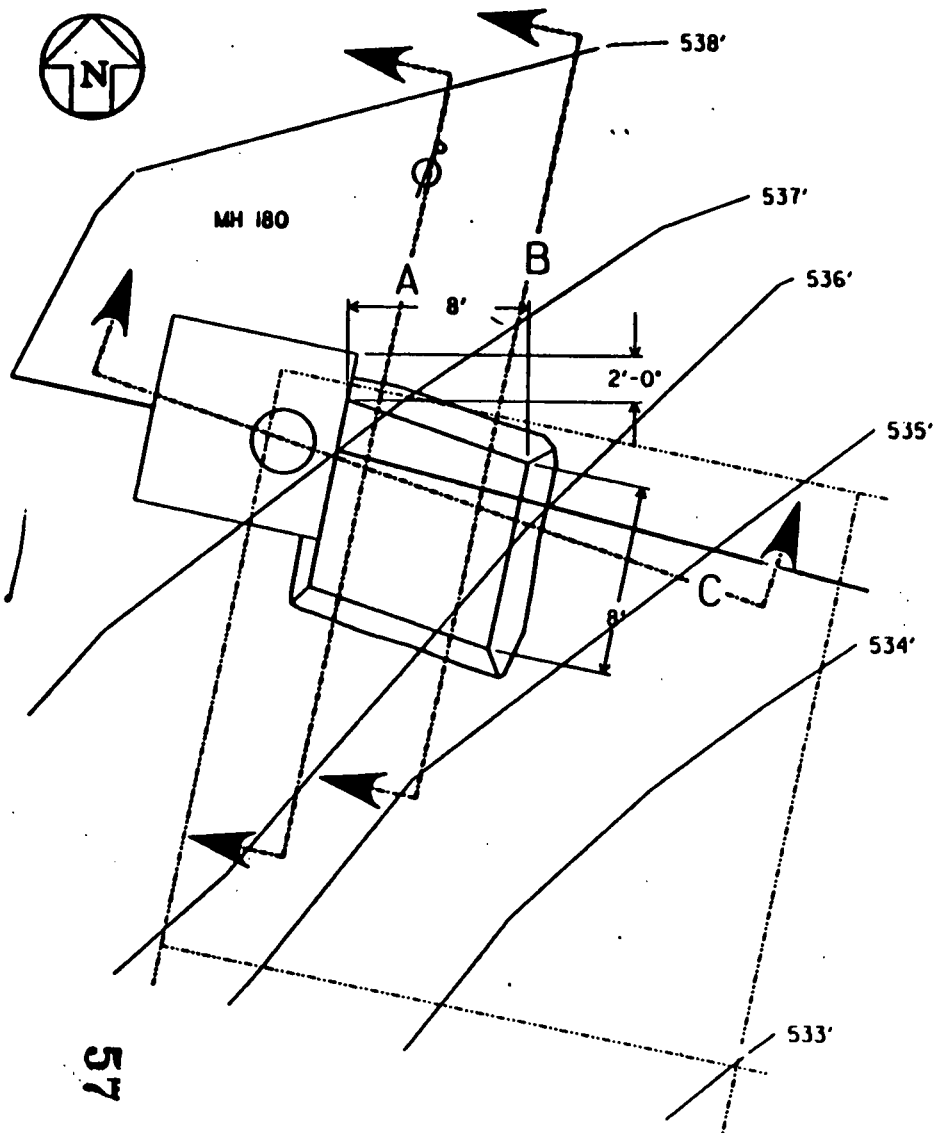

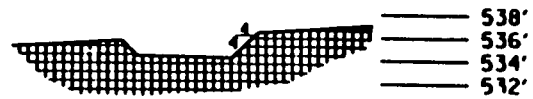

SECTION - A

SECTION - B

SECTION - C

57

287

NO.	REVISIONS	DATE	DWN. BY	APPD.	NO.	REVISIONS	DATE	DWN. BY	APPD.	REF. DWG. NO.

NOTE: DWGS C.A.D. DRAWING NOT TO BE REVISED MANUALLY

WESTINGHOUSE NAT'L CO. OF OHIO
FERNALD, OHIO
FEED MATERIALS PRODUCTION CENTER
U.S. DEPARTMENT OF ENERGY

OUTFALL SEWER RESTORATION
EXCAVATION DETAILS
AS-BUILT

00X-5500-G-0258 | 0

ATTACHMENT VII

As-Built Outfall Sewer Restoration Certification Sample Locations

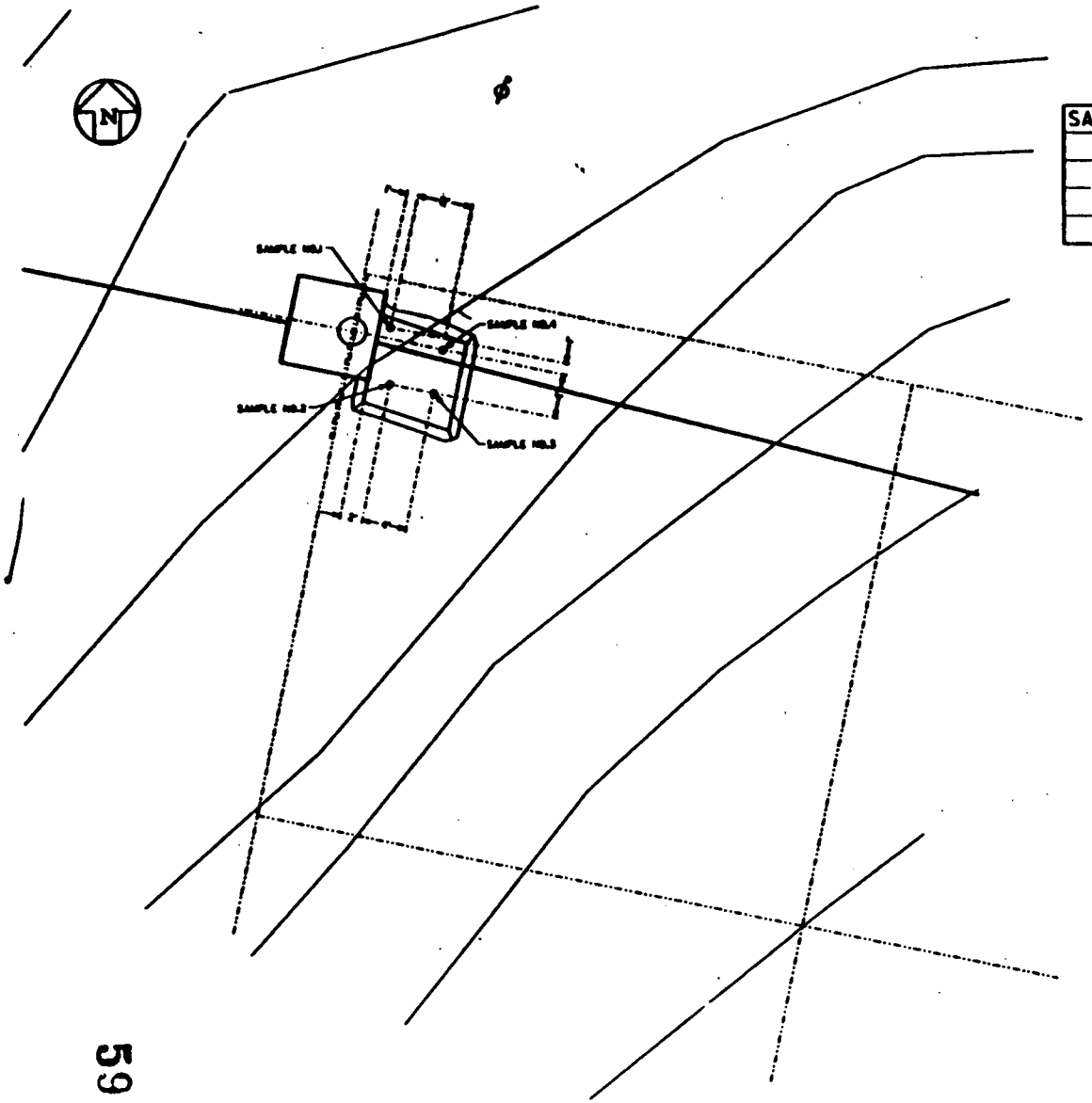

SAMPLE NO.	TOTAL THORIUM IN PPM 0-6"	TOTAL URANIUM IN PPM 0-6"
1	<23	18
2	<23	27
3	<23	27
4	<23	<11

GENERAL NOTES:

1. THE ACTION LEVEL AT WHICH REMEDIATION IS REQUIRED FOR RADIOLOGICALLY CONTAMINATED SOIL AT THE F.M.P.C. IS AS FOLLOWS(REFER TO FMPC-7201

NATURAL URANIUM-35 PICOCURIES PER GRAM,OR 52 PPM
NATURAL THORIUM-10 PICOCURIES PER GRAM,OR 46 PPM.

287

59

NO.	REVISIONS	DATE	DWN. BY	APPD.	NO.	REVISIONS	DATE	DWN. BY	APPD.	REF. DWG. NO.

NOTE: UNCO C.A.D. DRAWING NOT TO BE REVISED MANUALLY

WESTINGHOUSE MAT'LS CO. OF OHIO
FERNALD, OHIO
FEED MATERIALS PRODUCTION CENTER
U.S. DEPARTMENT OF ENERGY

OUTFALL SEWER RESTORATION
VERIFICATION SAMPLE LOCATIONS
AS BUILT

00X-5500-G-02512 | 0

ATTACHMENT VIII

Radiological Survey Report
Manhole 180

RADIO-ANALYTICAL DATA
from the
VICINITY of MANHOLE 180

NOTE: See accompanying map for sample locations

(Values given are millirem)

LOCATION	DESCRIPTION	ANALYZER HEIGHT CONTACT	3 FEET
1	Roadside	.002	.002
2	Roadside (down incline)	.003	.003
3	Roadside	.002	.002
4	Manhole	.003	.003
5	Above manhole	.003	.003
6	Boundary	.002	.003
7	Within Boundary	.003	.003
8	Within Boundary	.004	.004
9	Within Boundary	.005	.004
10	Within Boundary	.004	.004
11	Within Boundary	.004	.004
12	Within Boundary	.004	.004
13	Within Boundary	.004	.004

KHA
Dose rate locations are numbered and circled
~~See Survey.~~

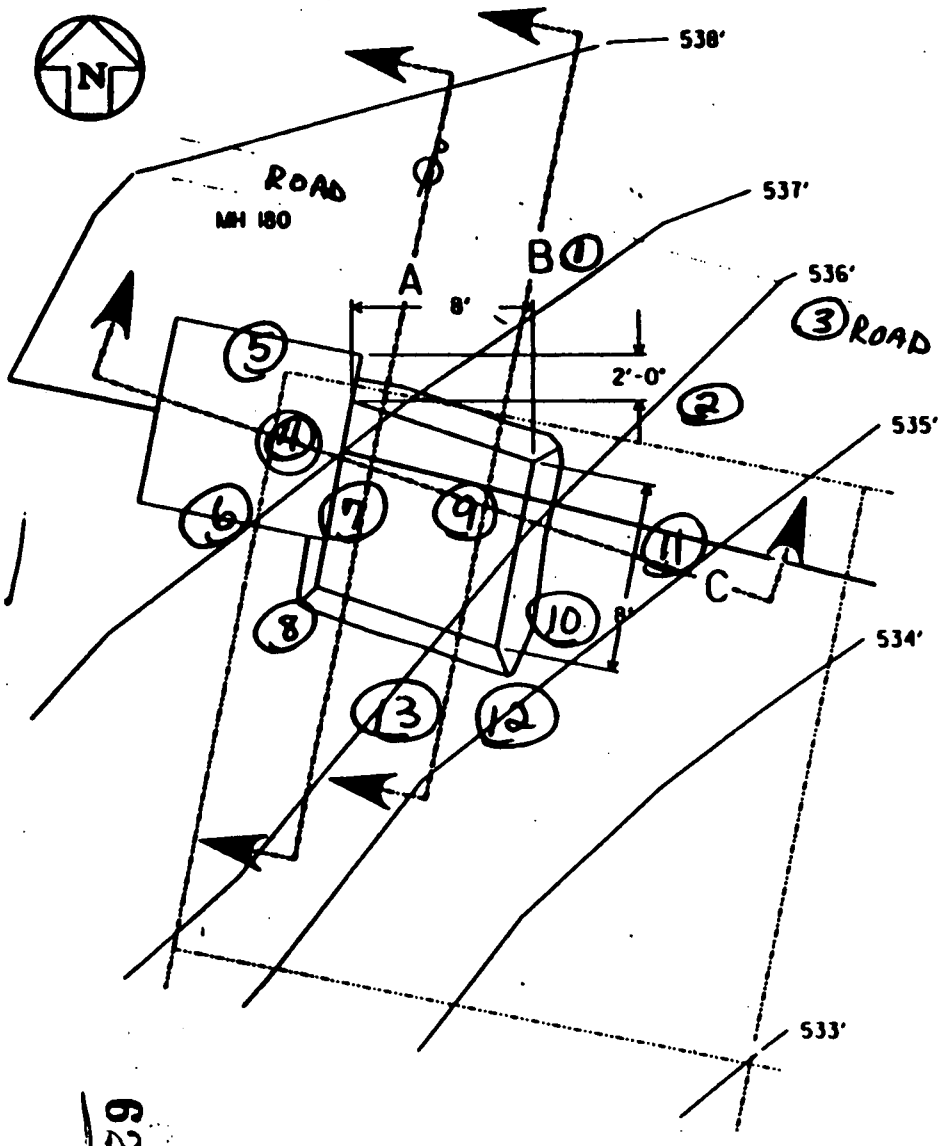

SECTION - A

SECTION - B

SECTION - C

287

62

REVISIONS	DATE	DRN. BY	APPD.	NO.	REVISIONS	DATE	DRN. BY	APPD.	REF. DWG. NO.

NOTE: UNCD C.A.D. DRAWING NOT TO BE REVISED MANUALLY

WESTINGHOUSE NATL CO. OF OHIO
FERNALD, OHIO
FEED MATERIALS PRODUCTION CENTER
U.S. DEPARTMENT OF ENERGY

OUTFALL SEWER RESTORATION
EXCAVATION DETAILS
AS-BUILT

00X-5500-G-0258 | 0