G-000-1104.3

377

FEASIBILITY DEMONSTRATION OF THE POLYMERIC BARRIER SYSTEM FOR THE INTERIM CONTROL OF HAZARDOUS MATERIALS

11/01/88

US
14
REPORT

[redacted]

377

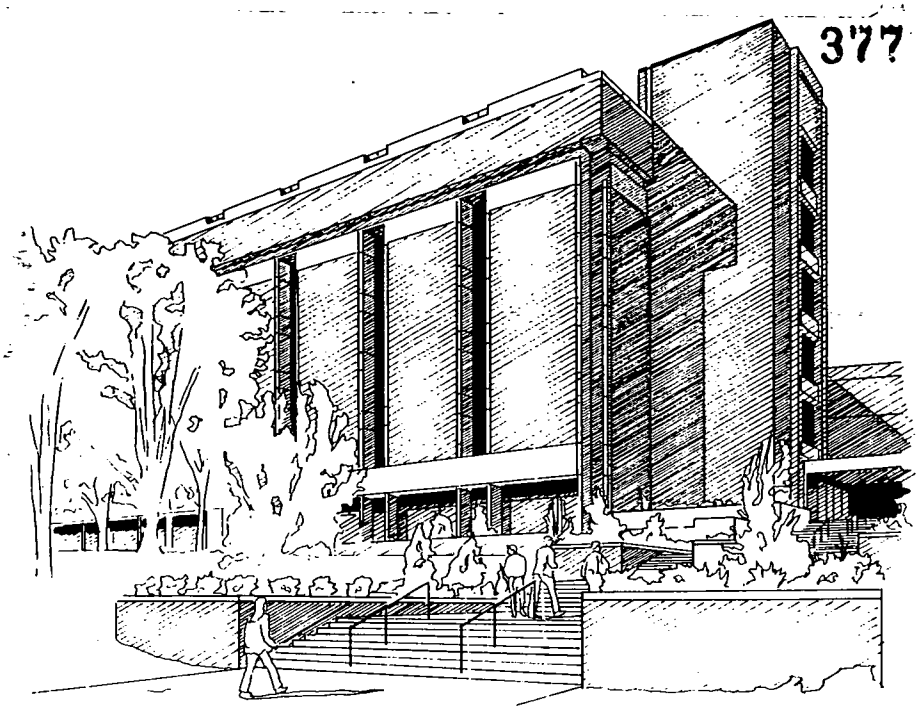

UNIVERSITY OF CINCINNATI
COLLEGE OF ENGINEERING

FEASIBILITY DEMONSTRATION OF THE POLYMERIC BARRIER SYSTEM FOR THE INTERIM CONTROL OF HAZARDOUS MATERIALS

by

L. A. Rieser, R. Janke, J. M. Christenson

Nuclear Engineering Program
Department of Chemical & Nuclear Engineering
College of Engineering
University of Cincinnati

FEASIBILITY DEMONSTRATION

OF THE

POLYMERIC BARRIER SYSTEM

FOR THE

INTERIM CONTROL OF HAZARDOUS MATERIALS

by

L. A. Rieser, R. Janke, J. M. Christenson

CONFIDENTIAL

November, 1988

Nuclear Engineering Program
Department of Chemical & Nuclear Engineering
College of Engineering
University of Cincinnati

JMC5

ACKNOWLEDGEMENTS

The success of the Polymeric Barrier System (PBS) Feasibility Demonstration Project was the result of a team effort. Other members of the project team in addition to the authors of this report were B. Baumeister, D. Tierney and M. Lessler. Their contributions to the project's success were significant and are gratefully acknowledged.

POLYMERIC BARRIER SYSTEM FEASIBILITY DEMONSTRATION PROJECT

CONTENTS

		PAGE
1.0	Executive Summary	1
2.0	Background	2
3.0	Materials Development	4
4.0	FMPC Site Feasibility Field Test	6
5.0	Field Test Results	10
6.0	Conclusions	13
	References	14

1.0 EXECUTIVE SUMMARY

The feasibility of using a non-toxic water based Polymeric Barrier System (PBS) for the interim control of several types of contaminated materials was demonstrated on a pilot scale by a field test at the Feed Materials Production Center on September 28, 1988. Using a spray application system three test sections simulating contaminated material, were covered with a continuous polymeric coating in a two-stage process. The test sections (consisting of recently excavated soil, fly ash and a compacted roadway surface) were chosen to demonstrate the wide variety of substrates to which the PBS can be applied. After curing the PBS formed a flexible, impermeable coating that isolated the test section material from the external environment. The test sections have been visually monitored since the date of the field test. Despite four weeks of exposure to the outdoor elements (wind, rain, sunlight and the associated thermal cycling), the polymeric barrier material on two of the three test sections (excavated soil and fly ash), has maintained its integrity and shows no visual evidence of weathering. The roadway section was subjected to uncontrolled vehicular traffic and the barrier surface on some portions of this test section has been significantly degraded. The barrier material on the other two test sections appears to be just as strong and durable as it was on the day of the field test.

2.0 BACKGROUND

On June 3, 1988 the University of Cincinnati submitted a proposal to Westinghouse Materials Company of Ohio (WMCO) to perform a 90-day demonstration project on the feasibility of using a polymeric barrier system (PBS) for the interim control of hazardous material at the Uranium Feed Materials Production Center (FMPC) at Fernald, Ohio. During the project the University proposed to undertake a short material development program to refine an existing low-toxicity water-based polymeric barrier system that had been briefly investigated as part of a previous project.[1]

After the development program was completed the University proposed to conduct a feasibility field test demonstration of the PBS on the following soil test sections on the FMPC site:

1. Fly ash
2. Roadway surface
3. Excavated soil

The proposed test sections had surface areas of between 50 and 100 square feet and were all inside the FMPC property lines and outside the FMPC security fence.

The PBS was to be applied to the test sections by a spray application system which had already been demonstrated in several pilot scale field tests. After curing the applied PBS was expected to cover each test section with a durable, continuous polymeric coating that would isolate the test section material from the external environment and prevent its further dispersion by wind or rain. The proposal specified that the test sections would be visually monitored for integrity and durability for a minimum of 30 days after the application of the PBS material.

Westinghouse accepted the University's proposal on July 1, 1988 and the

University began the project immediately thereafter. The following sections describe the work performed under the terms of the project agreement, including results of the material development program, a description of the feasibility demonstration field test, the field test results, and the conclusions drawn from those results.

3.0 MATERIALS DEVELOPMENT PROGRAM

The materials development effort was restricted to the consideration of water-based, low toxicity materials. Two commercially available base emulsions used industrially as bases for latex paint formulations, an acrylic latex and a vinyl acetate/ethylene co-polymer were considered. Both emulsions have similar functional characteristics and require the use of a thickening agent so that the applied material is sufficiently thixotropic that it does not simply drain to the low-point of an irregularly shaped substrate surface before it sets up. In preliminary investigations of the more than 20 thickening agents considered, laboratory experiments demonstrated that only one of the agents was suitable for the material system selected for this application. The evaluation was based on the agent's ability to induce thixotropy in the intially applied material and to enhance the desirable properties (continuity, strength, flexibility and durability) of the cured polymeric film. As a result of these experiments a material system consisting primarily of an acrylic latex emulsion base with an acrylate thickener was selected for PBS feasibility demonstration at the FMPC.

Further experiments, including two pilot-scale field tests, determined that the most reliable way to establish a continuous durable barrier film over a soil substrate was by means of a two step process. The material applied to the substrate in each step was designed to perform a different function. The material applied in the first step, the primary film, was designed to penetrate the substrate and to leave a thin film on the surface. After about a 30 minute soak and setup time, the second step application, consisting of the secondary film material, is made to the primary-film-coated substrate surface.

The major component of both the primary and secondary films is the acrylic latex emulsion. In the case of the primary film, water and a surfactant are added to enhance the ability of film material to soak into the substrate and incorporate the substrate material into the film. As a result of these modifications, when the primary film material is applied to a water-permeable substrate (such as soil or fly-ash), only a thin coating of film material is left on the substrate surface and no thickening agent is needed to control film run-off.

The secondary film material includes a thickening agent and a pigment which gives the cured film a distinctive dark brown color and makes it easy to determine film continuity by visual inspection.

4.0 FMPC SITE FEASIBILITY FIELD TEST

On the morning of Wednesday, September 28, the UC project team transported the PBS system materials necessary for the Feasibility Field Test and the PBS Spray Application System (Table 4.1) to the FMPC site. The team was conducted to the field test site by Mr. David Kozak, WMCO Research and Development Engineer. By mutual agreement of Mr. Kozak and the project team, three test sections were selected. The substrates of the test sections consisted of excavated soil, fly ash and a compacted roadway surface.

4.1 Test Section 1 - Excavated Soil

A small test section with a surface area of about 57 sq. ft. was constructed using recently excavated material from the FMPC site. Using this test section as a substrate, a PBS was spray applied in a two step process. A primary composition was applied to seal the surface of the test section, followed by a secondary composition to resist mechanical wear and weathering. A volume of 0.93 gal. of the primary composition and 10.0 gal. of the secondary composition were applied. Geometry and dimensions of test section 1 are provided in Figure 4.1.

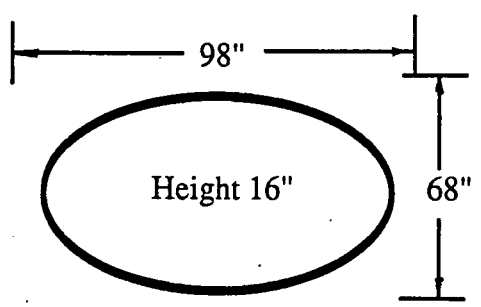

Figure 4.1: Plan View of Test Section 1 - Excavated Soil Substrate

4.2 Test Section 2 - Fly Ash

Test Section 2 consisted of a conically shaped, thirty-three inch high pile of weathered fly ash and a relatively flat adjoining triangular area at the base of the pile. The basic geometry and dimensions of Test Section 2 are provided in Figure 4.2. This section was isolated using an identical two part system to that demonstrated on Test Section 1. In this application, 2.9 gal. of the primary composition and 8.8 gal. of the secondary composition were applied.

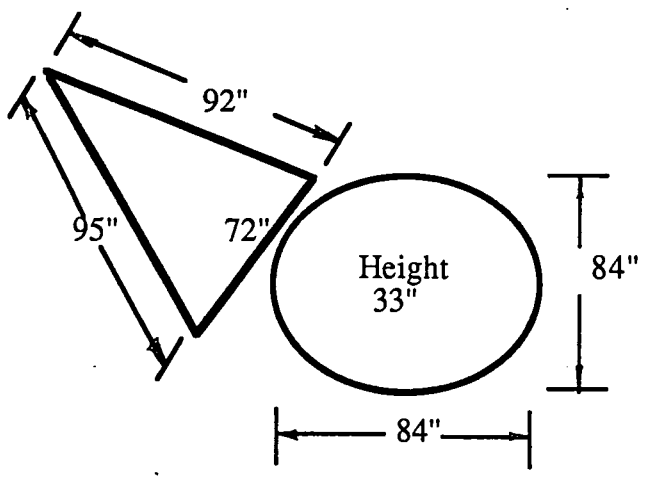

Figure 4.2: Plan View of Test Section 2 - Fly Ash Substrate

4.3 Test Section 3 - Roadway Surface

Test Section 3 was selected to demonstrate the mechanical wearability of the modified acrylic latex emulsion system. This section was comprised of a well compacted roadway surface covered with chipped limestone and larger gravel. Figure 4.3, below illustrates the roadway section geometry and dimensions.

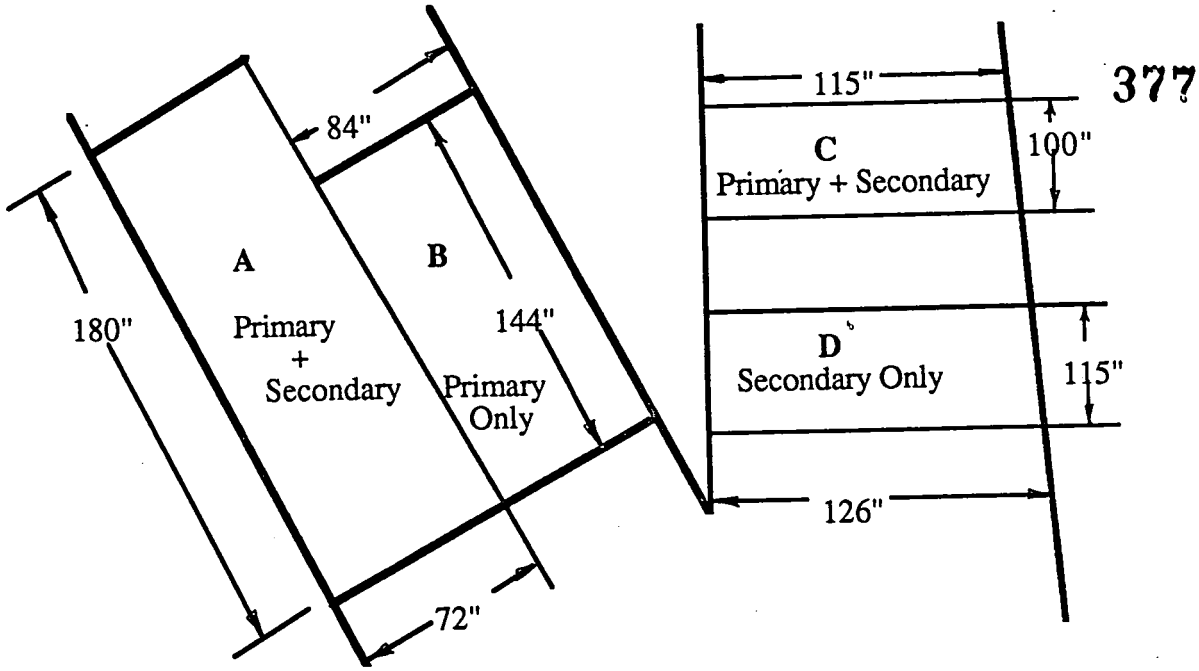

Figure 4.3: Plan View of the 4 Parts of Test Section 3 - Roadway Surface

After subdividing Section 3 into four parts, several combinations of the primary and secondary coatings were applied. The volumes and compositions applied to each section are as follows:

Part A	Primary 2.2 gal. Secondary 4.0 gal.
Part B	Primary only 2.2 gal.
Part C	Primary 2.2 gal. Secondary 3.3 gal.
Part D	Secondary only 8.4 gal.

Traffic conditions at the test section were also varied. Parts A and B of Test Section 3 supported heavy truck traffic while Parts C and D supported mostly car and light truck traffic.

TABLE 4.1 PBS SPRAY APPLICATION SYSTEM

1. DeVilbiss Air operated, high pressure supply pump (Model QEX-R80-A4, fluid to air pressure ratio of 33:1)
2. DeVilbiss spray gun, VGB-511
3. DeVilbiss transporter cart, QEX-9990
4. Air regulator kit, KK600
5. 50 feet 3300 psi hose, 3/8 inch diameter
6. DeVilbiss high pressure surge chamber, 75-8860
7. DeVilbiss safety valve, KK607
8. Fluid nozzles, maximum orifice size of 0.054 inch
9. Mastic fluid tips, maximum of orifice size 0.072 inch
10. Diesel operated, high delivery air compressor, 100 cubic feet per minute

5.0 RESULTS

In the thirty days that have elapsed following the feasibility demonstration field test, the three PBS test sections have been visually monitored by the UC research team and by WMCO development personnel. As indicated in Section 1.0, despite four weeks of exposure to the outdoor elements (wind, rain, sunlight and the associated thermal cycling), the polymeric barrier material applied to Test Sections 1 and 2 has maintained its integrity and shows no visual evidence of weathering.

The polymeric barrier material applied to Test Section 3 also provides no visual indication of degradation by natural weathering. However, heavy vehicular traffic over the test section before and after the curing of the polymeric barrier has caused some mechanical damage to the material. Part A of Test Section 3 shows some minor stress cracking of the two-part PBS material due to the movement of large (3-5" diameter) stones, displaced by tire rotation. Part B of Test Section 3 to which only the primary composition was applied showed a near total loss of integrity. Parts A and B of Test Section 3 located on the only access road to the fly ash storage area supported heavy vehicular traffic routinely.

Part D, covered with a high volume secondary coating only, and Part C covered with the two-part system also evidenced minor abrasive stress cracking.

Overall, the two-part polymeric barrier system applied to Part C of Test Section 3 showed the greatest mechanical wearability at a cost of less than $\$0.50/ft^2$. Cost data for the material applied to all of the Test Sections is provided in Table 5.1.

It is anticipated that adjustments to the thickness of the barrier and the addition of extenders or fillers to the composition will further reduce these costs.

TABLE 5.1 COST ANALYSIS OF PBS MATERIALS

Test Section	Applied Wt. Primary (lbs.)	Applied Wt. Secondary (lbs.)	Test Section Area (ft^2)	Primary Cost[1] ($\$/ft^2$)	Secondary Cost[1] ($\$/ft^2$)
Section 1 (Excavated Soil)	8.25	90.5	57.0	0.09	1.31
Section 2 (Fly Ash)	26.25	78.0	97.0	0.17	0.67
Section 3 (Road Surface) A	20.0	36.0	90.0	0.14	0.33
(Road Surface) B	20.0	-	84.0	0.15	-
(Road Surface) C	20.0	30.0	80.0	0.16	0.31
(Road Surface) D	-	75.0	100.0	-	0.63

NOTE 1: Allows for 10% material waste from overspray and system losses.

TABLE 5.2

COST ANALYSIS DATA

Constituent	Cost/lb.($)
Modified Acrylic Latex Emulsion (62% Solids)	0.765
Surfactant	2.195
Pigment (Secondary Film Component Only)	2.47
Acrylate Thickener (Dry)	105.33

Primary Composition (100 lb. Basis)

Component	Weight (lbs.)
Modified Acrylic Latex Emulsion	89.3
Surfactant	1.0
Water	9.7
Total Weight	100.0

Primary Cost: $0.70/lb

Secondary Composition (100 lb. Basis)

Component	Weight (lbs.)
Modified Acrylic Latex Emulsion	96.0
Suspended Pigment	3.0
Acrylate Thickner (10% Aqueous Solution)	1.0
Total Weight	100.0

Secondary Cost: $0.92/lb.

6.0 CONCLUSIONS

The results of the September 28 FMPC field test have unequivocally demonstrated the feasibility of using a two step application process to form a durable continuous polymeric barrier over a wide variety of substrate materials. The toughness and durability of the resulting barrier make the two-step PBS process an attractive method for the interim control of hazardous waste material.

The barrier produced by the PBS process has several advantages over the sheet plastics and coated fabrics commonly used to control the dispersion of contaminated material.

Tarpaulins and similar geotextiles used to isolate contamination from the environment have several known limitations. In extremely cold weather most become brittle and crack, allowing wind and moisture to penetrate. This type of cover is also subject, even while intact, to movement or removal by wind alone. Tarpaulins additionally do not conform well to nonsymetrical configurations and must be seamed to accommodate all but the smallest applications. Polymeric Barrier Systems, as demonstrated at the FMPC Feasibility Field Test exhibit none of the functional deficiencies of pre-formed covers such as tarpaulins.

In many situations the PBS material can be allowed to remain in place indefinitely without having an adverse environmental impact. In cases where the disposal philosophy requires the removal of the substrate to an "ultimate disposal site," the PBS material can probably be treated in the same manner as the substrate without having much effect on the overall disposal costs.

The PBS materials are impervious to wind and rain, conform to any waste configuration, and can be applied continuously, even over the space of days, if necessary for very large applications. Unlike other polymer systems

currently in use for waste management applications (i.e.; polyurethane and urea/formaldehyde foam) the PBS materials demonstrated have no known environmental impact.

REFERENCES

1. "Polymeric Barrier System Project Phase 1 Report: Development of Polymeric Barrier Systems for Waste Control Technology Applications", B. W. Baumeister et. al., Nuclear Engineering Program, University of Cincinnati, 50-53 (April, 1988).