R-008-203.3

443

ENGINEERING EVALUATION/COST ANALYSIS (EE/CA) K-65 SILOS REMOVAL ACTION AT THE FMPC JULY 1990

7-31-90

BNI/DOE
135
REPORT

[redacted]

443

ENGINEERING EVALUATION/COST ANALYSIS (EE/CA)

K-65 SILOS REMOVAL ACTION

at the

Feed Materials Production Center
Fernald, Ohio

for

The United States Department Of Energy

July 1990

BY: BECHTEL NATIONAL, INC.

443

ENGINEERING EVALUATION/COST ANALYSIS (EE/CA)

K-65 SILOS REMOVAL ACTION

at the

FEED MATERIALS PRODUCTION CENTER

FERNALD, OHIO

for

THE UNITED STATES DEPARTMENT OF ENERGY

by

Bechtel National, Inc.

243

CONTENTS

		Page
1.0	INTRODUCTION	1
1.1	BACKGROUND	1
1.2	SCOPE	2
1.3	TECHNICAL DESCRIPTION	3
1.4	REGULATORY REQUIREMENTS	10
1.5	REMOVAL ACTION OBJECTIVES	11
1.6	EVALUATION CRITERIA	12
2.0	SITE CHARACTERIZATION	13
2.1	SITE BACKGROUND	13
2.2	SITE SETTING	17
2.2.1	Climate and Meteorology	17
2.2.2	Vegetation and Wildlife	18
2.2.3	Land Use and Population	21
2.3	ANALYTICAL DATA	21
2.3.1	Environmental Fate	24
2.3.2	Environmental Transport	24
2.3.3	Potential Risks	25
3.0	REMOVAL ACTION OBJECTIVES	28
3.1	STATUTORY REQUIREMENTS	28
3.1.1	CERCLA Requirements	28
3.1.2	Requirements of FFCA and Other Agreements	30
3.1.3	RCRA Requirements	32
3.1.4	National Environmental Policy Act (NEPA)	33
3.2	SCOPE AND PURPOSE	34
3.3	COMPLIANCE WITH ARARs	36
3.3.1	Background	36
3.3.2	ARARs for the K-65 Silo Removal Action	40
4.0	REMOVAL ACTION ALTERNATIVES	44
4.1	DEVELOPMENT OF INITIAL ALTERNATIVES	44
4.2	SUMMARY DESCRIPTION OF INITIAL ALTERNATIVES	46
4.2.1	Alternative 1: No Action	46
4.2.2	Alternative 2: Construction of Tornado-Resistant Enclosure	46
4.2.3	Alternative 3: Relocation of Residues	51
4.2.4	Alternative 4: Construction of Light Structure Enclosure with Continuous Radon Removal	53
4.2.5	Alternative 5: Covering the K-65 Residues	54
4.2.6	Alternative 6: Reduction of Radon Inventory	63
4.2.7	Alternative 7: Administrative Controls	65

5.0 EVALUATION OF ALTERNATIVES 67
5.1 EVALUATION CRITERIA 67
5.1.1 Effectiveness 67
5.1.2 Implementability 71
5.1.3 Costs 71
5.2 ALTERNATIVE 1: NO ACTION 71
5.2.1 Effectiveness 71
5.2.2 Implementability 73
5.2.3 Cost 73
5.3 ALTERNATIVE 2: CONSTRUCTION OF TORNADO-RESISTANT ENCLOSURE 74
5.3.1 Effectiveness 74
5.3.2 Implementability 75
5.3.3 Cost 76
5.4 ALTERNATIVE 3: RELOCATION OF RESIDUES 76
5.4.1 Effectiveness 76
5.4.2 Implementability 78
5.4.3 Cost 80
5.5 ALTERNATIVE 4: CONSTRUCTION OF LIGHT STRUCTURE ENCLOSURE WITH CONTINUOUS RADON REMOVAL 80
5.5.1 Effectiveness 80
5.5.2 Implementability 82
5.5.3 Cost 83
5.6 ALTERNATIVE 5: COVERING THE K-65 RESIDUES 83
5.6.1 Effectiveness 83
5.6.2 Implementability 87
5.6.3 Cost 89
5.7 ALTERNATIVE 6: REDUCTION OF RADON INVENTORY . . 89
5.8 ALTERNATIVE 7: ADMINISTRATIVE CONTROLS 90

6.0 SELECTION OF THE PREFERRED ALTERNATIVE 91
6.1 ELIMINATION OF NONRESPONSIVE ALTERNATIVES 91
6.2 COMPARATIVE ANALYSIS 91
6.2.1 Short-Term Protection of Public Health and Environment 92
6.2.3 Reduction of Toxicity/Mobility/Volume . . 97
6.2.4 Consistency with Final Action 97
6.2.5 Technical Feasibility 99
6.2.6 Timeliness 100
6.2.7 Compliance with ARARs 101
6.2.8 Cost 101
6.3 PREFERRED ALTERNATIVE 101

REFERENCES R-1
APPENDIX A-1
ATTACHMENT 1 . . . . . A1-1
ATTACHMENT 2 . . . . . A2-1
ATTACHMENT 3 . . . . . A3-1

443

FIGURES

Number	Title	Page
1-1	FMPC Site Location	5
1-2	Generalized FMPC Site Layout	6
1-3	Waste Storage Area West Side of Site	7
1-4	Typical Cross-Section, Silos 1 and 2	8
2-1	Radium Decay Chart	15
2-2	Wind Rose for FMPC	20
4-1	Elevation - Tornado-Resistant Shelter Structure	48
4-2	Plan View - Tornado-Resistant Shelter Structure	49
4-3	Isometric - Tornado-Resistant Shelter Structure at Fernald	50
4-4	Elevation - Light, Temporary, Non-Tornado-Resistant Shelter Structure	55
4-5	Plan View - Light, Temporary, Non-Tornado-Resistant Shelter Structure	56
4-6	Elevation - Temporary Structure for Cover Layer Alternative	57
4-7	Detail - Introduction of Sand Layer	59
4-8	Detail - Introduction of Bentonite Layer	62

443

TABLES

Number	Title	Page
1-1	Data Summary	9
3-1	ARARs and TBCs	42
5-1	Performance of Alternatives vs ARARs	70
6-1	Responsiveness of Alternative vs Failure Mode	94
6-2	Comparative Evaluation of Removal Alternatives	95
6-3	Summary of Cost Estimates	102

6

ACRONYMS

AEC	Atomic Energy Commission
ALARA	As Low As Reasonably Achievable
ARARs	Applicable or Relevant and Appropriate Requirements
ATE	Air-tight temporary enclosure
AWQC	Ambient Water Quality Criteria
BAT	Best available technology
CAA	Clean Air Act
CERCLA	Comprehensive Environmental Response, Compensation, and Liability Act
COE	U.S. Army Corps of Engineers
CWA	Clean Water Act
DCG	Derived concentration guide
DOE	U.S. Department of Energy
EE/CA	Engineering evaluation and cost analysis
EPA	U.S. Environmental Protection Agency
FFCA	Federal Facility Compliance Agreement
FMPC	Feed Materials Production Center
ICRP	International Commission on Radiological Protection
ISF	Interim storage facility
MCL	Maximum Concentration Limit
MCLG	Maximum Concentration Level Goals
MRPSA	Marine Protection Research and Sanctuaries Act
NAAQS	National Ambient Air Quality Standards
NCP	National Contingency Plan
NEPA	National Environmental Policy Act
NESHAP	National Emission Standards for Hazardous Air Pollutants
NLO	National Lead (Company) of Ohio
NPDES	National Pollutant Discharge Elimination System
NPL	National Priorities List
NRC	U.S. Nuclear Regulatory Agency
O&M	Operations and maintenance
OSHA	Occupational Safety and Health Administration

443

RI/FS	Remedial Investigation/Feasibility Study
SDWA	Safe Drinking Water Act
SECURE	Surface/Subsurface Engineered Canister Units Retention
TBC	To be considered
TSCA	Toxic Substances Control Act
UIC	Underground inspection control
WMCO	Westinghouse Materials Company of Ohio

8

ABBREVIATIONS

cfm	cubic feet per minute
cm	centimeter
cm^2	square centimeter
Ci	Curie
d	day
°F	degrees Fahrenheit
ft	foot
ft^3	cubic feet
g	gram
h	hour
ha	hectares
in.	inch
°K	degrees Kelvin
kg	kilogram
km	kilometer
L	liter
m	meter
m^2	square meter
mCi	millicurie
MeV	million electron volts
Mt	metric ton
mi	mile
mph	miles per hour
mrem	millirem
Pci	picocurie
sec	second
μCi	microcurie
y	year

1.0 INTRODUCTION

1.1 BACKGROUND

On July 18, 1986, a federal facility compliance agreement (FFCA) was jointly signed by the U.S. Department of Energy (DOE) and the U.S. Environmental Protection Agency (EPA) concerning the environmental efforts associated with DOE's Feed Materials Production Center (FMPC) in Fernald, Ohio. The FFCA was required by Executive Order 12088 (43 FR 47707) to ensure compliance with existing statutes and regulations. The purpose of the FFCA is to ensure that any environmental effects associated with past and present activities conducted at FMPC are promptly investigated so that appropriate response actions can be taken.

FMPC is divided into five operable units. An operable unit means any logical grouping of parts of all of the site that are similar based upon physical features, contaminant sources or types, schedules or likely responses. One of the operable units for FMPC includes those facilities used for the storage or disposal of radiological wastes from FMPC operations. These facilities include two silos (Silos 1 and 2) containing K-65 residues and are part of the operable unit known as Operable Unit Number 4.

The National Contingency Plan (NCP) requires that the lead agency, DOE in this case, conduct an engineering evaluation and cost analysis (EE/CA) to assist in the selection of a nontime-critical removal action. This EE/CA evaluates the feasibility of performing a removal action to mitigate the threat to public health and the environment from the wastes stored in Silos 1 and 2. This removal action is an element of a larger remedial action by DOE, which is currently in the development stages.

1.2 SCOPE

A Consent Agreement under the Comprehensive Environmental Response, Compensation, and Liability Act (CERCLA) Section 120 and 106(a) between EPA Region V and DOE was signed in April 9, 1990, which established a new and broader framework for remedial and removal actions. The Consent Agreement was entered into pursuant to Executive Order 12580 (52 FR 2923) to ensure that environmental impacts associated with past and present activities at FMPC are thoroughly investigated and that appropriate response actions are taken to protect the public health and the environment.

The Consent Agreement specifies the scope and schedule for Removal Action Number 4 at Silos 1 and 2. Key elements include an EE/CA for a removal action for Silos 1 and 2 and an evaluation of the feasibility of the construction of a protective structure enclosing Silos 1 and 2.

The function of this EE/CA is to investigate removal alternatives (including "no action") in response to short term threats to public health and environment from the K-65 Silos 1 and 2 <u>only</u>, to select the most appropriate response, and to document the decision-making process. The following screening criteria for alternatives were considered during development of this EE/CA:

- Consistency with long-term remedial action
- Ability to meet applicable and relevant or appropriate requirements (ARARs) to the extent practicable
- Reliance upon existing technologies only

1.3 TECHNICAL DESCRIPTION

Structural analysis (BNI 1990) of the silos has revealed that the silos have no credible remaining design life and may fail under tornado loadings. Failure of the domes means a loss of full containment function which may result from large cracks, or spalling of the domes, or a complete structural collapse of the domes.

The two silos addressed in this EE/CA are located on the west side of the FMPC (Figures 1-1 through 1-3) and were constructed in 1951 and 1952. The silos (Figure 1-4) are used for storage of radium-bearing wastes (K-65 residues), a by-product of uranium ore processing. The current volume of K-65 residues stored in both silos is estimated to be 195,000 ft^3 (approximately 8,800 Mt) (IT/ASI 1988).

Approximately 40 percent of the K-65 material is composed of silicates (SiO_2). Other constituents, which individually make up 1 percent or more of the residue, include calcium, iron, magnesium, and lead. No organic constituents are known to be present in the K-65 residues (IT 1990). In addition, no hazardous wastes are known to be present.

Unless otherwise stated in the text, all references to radon are ^{222}Rn. Similarly, all references to radium are ^{226}Ra, and all references to thorium are ^{230}Th.

The radiological constituents of the K-65 residues have been estimated to include 7 Ci of U (0.71 percent ^{235}U), 3,300 Ci of radium (^{226}Ra), and 1,810 Ci of thorium (^{230}Th) (Ijaz 1990). Prior to the installation of the protective coatings, the external radon flux ranged from 13 to 3 x 10^7 Pci/m^2-sec. The highest flux levels were detected near cracks in the concrete surface (IT/ASI 1988). No radon flux data is available after the domes were covered.

Radiation levels on the surface of the silo domes currently range from 145 to 185 mrem/h without operating the Radon Treatment System (RTS) (IT/ASI 1988). Samples of the internal air space indicate that there are approximately 33 Ci of radon in each of the silos (WMCO 1988b). Table 1-1 provides a summary of data pertinent to the K-65 silos which is used in this report. It should be noted that the data has been extracted from several sources and that the sources are not always in agreement. In those cases, this report uses either the data used in published risk assessment documents (Ijaz, 1990 and IT 1990) or the most conservative number available.

The following actions have been taken with regard to the silos:

- Berms were constructed (1963-1964) around each silo to provide lateral support to the silo walls. To correct erosion problems, the slope of the berms was changed from 1.5:1 to 3:1 (1983). The berms provide shielding as a secondary benefit.
- A radon treatment system (RTS) was added (1987) to reduce the level of radon gas in the air space above the residues and thus lower the radiation levels on the dome. This system is operated only when access to the silo domes for sampling or maintenance is required.
- In response to a structural analysis (Camargo 1986), protective structures, including a protective coating, were added (1987) to minimize further concrete deterioration and to reduce the radon emissions.

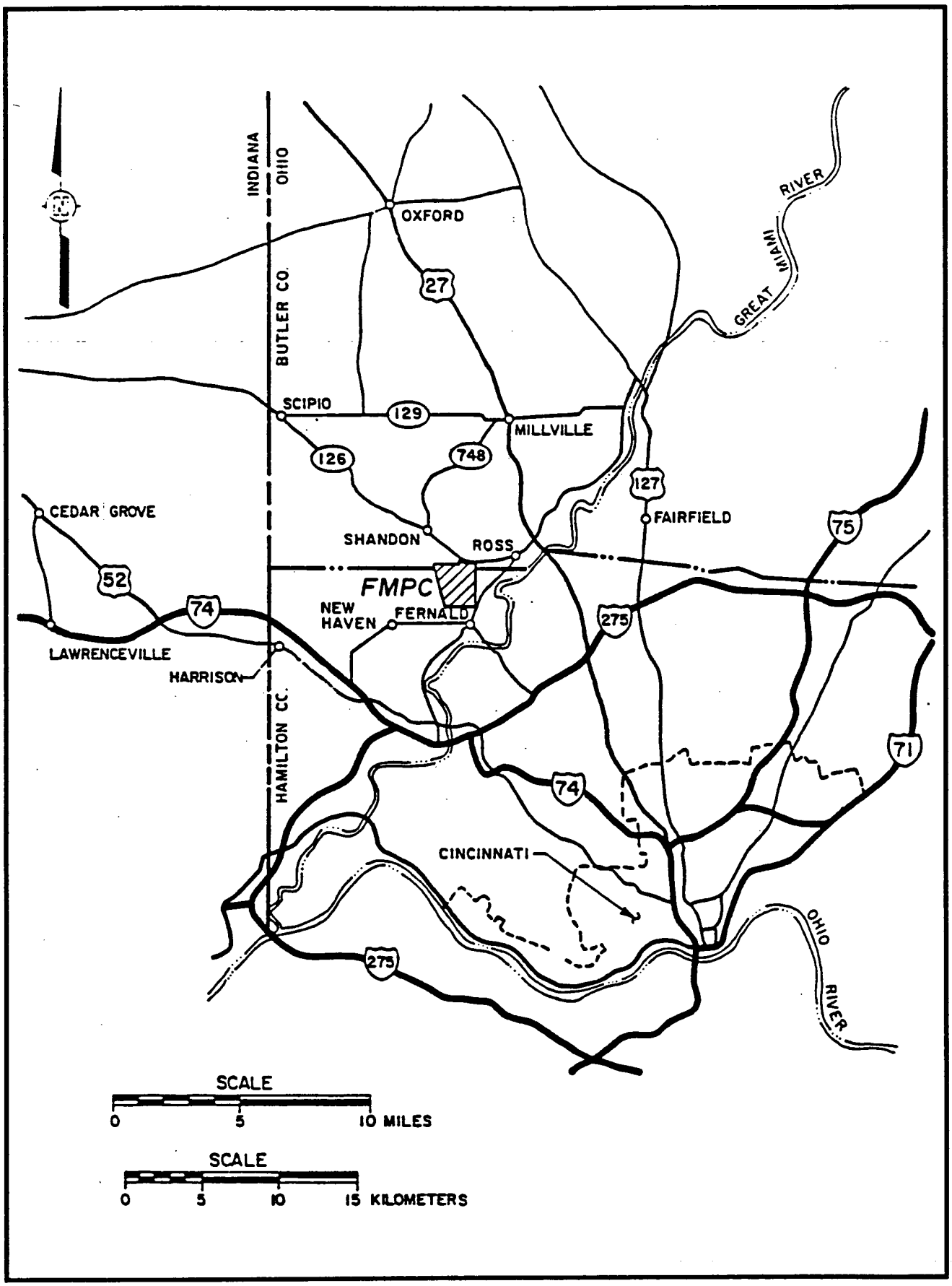

FIGURE 1-1
FMPC SITE LOCATION

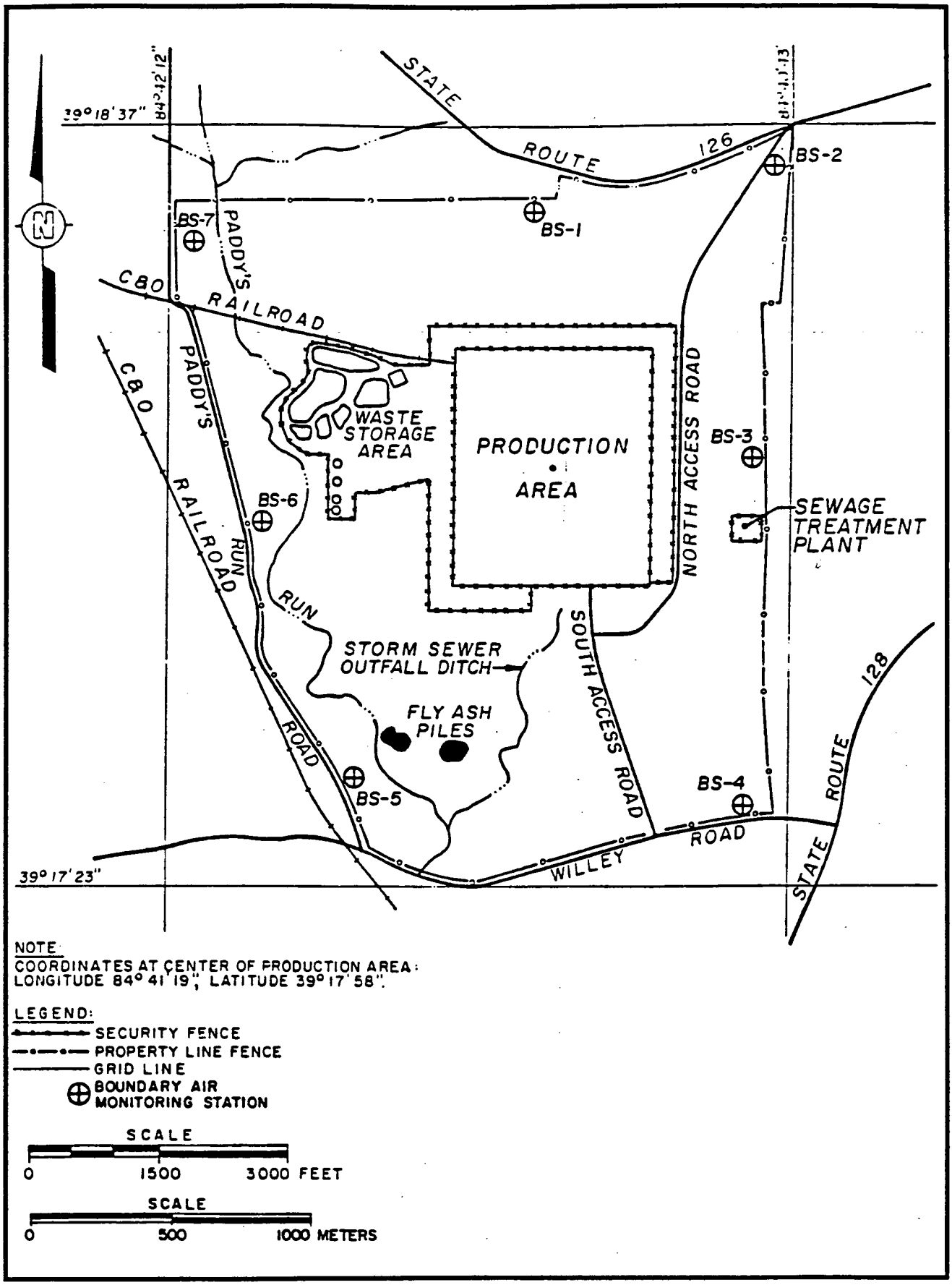

Figure 1-2
GENERALIZED FMPC SITE LAYOUT

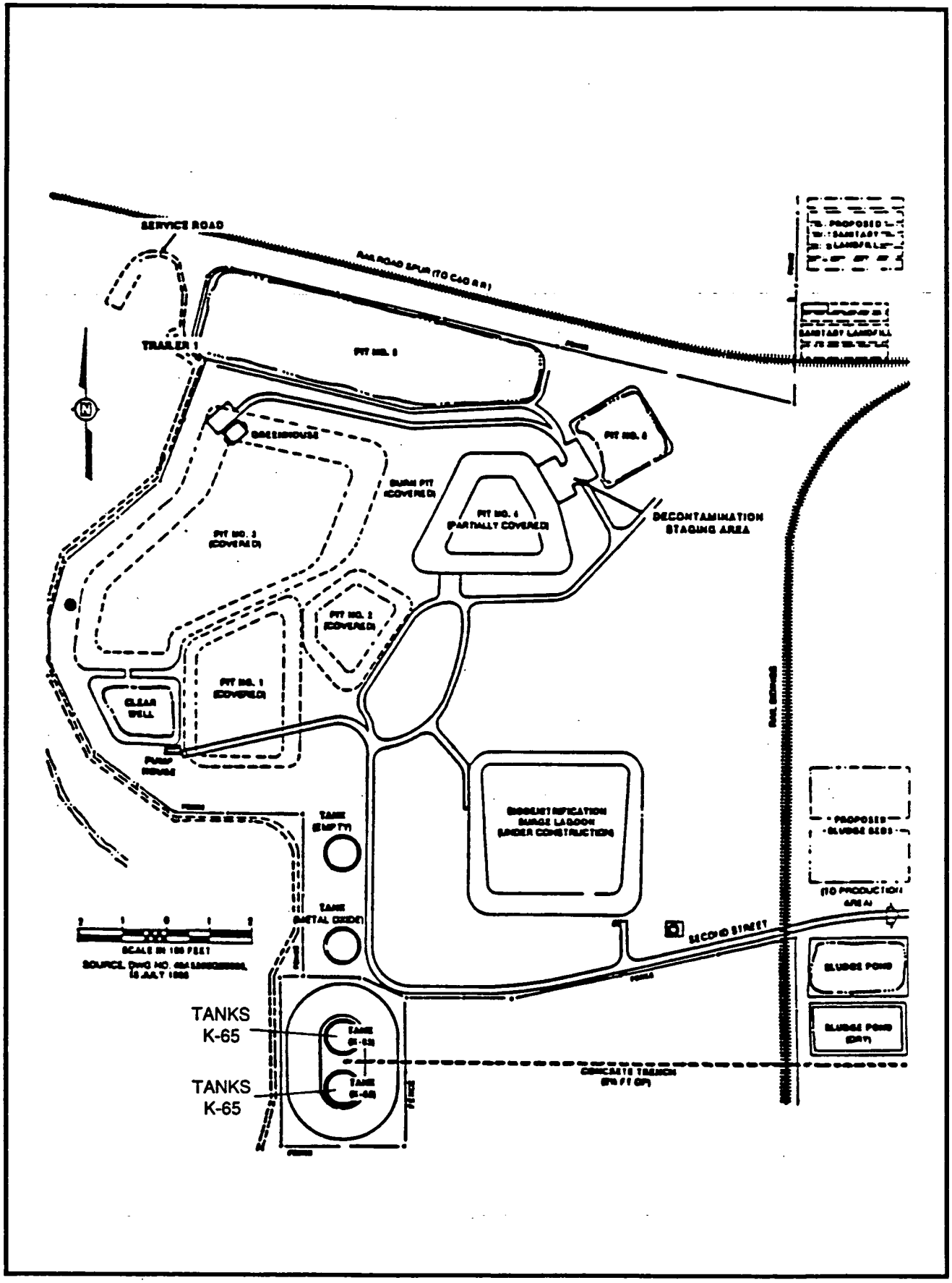

Figure 1-3
WASTE STORAGE AREA WEST SIDE OF SITE

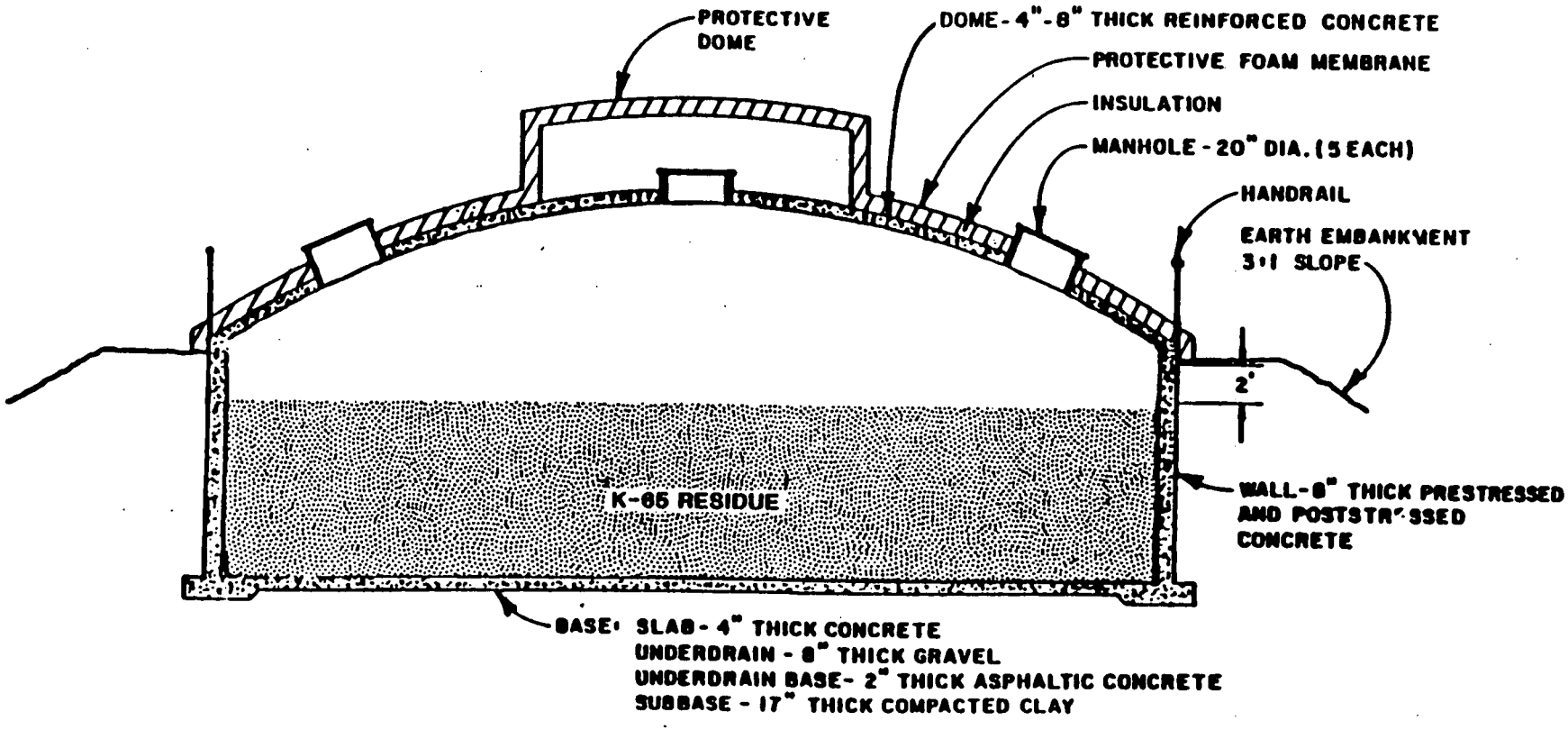

Figure 1-4
TYPICAL CROSS-SECTION, SILOS 1 AND 2

1 25A 1990.8

TABLE 1-1 Data Summary

Item	Units	Silo 1 (South)	Silo 2 (North)	Total	Notes
A. SILOS					
Height (Walls)	ft(m)			27 (8.23)	
Height (Dome)	ft(m)			36 (10.97)	
Diameter	ft(m)			80 (24.38)	
Dome Surface Area	m2	467	467	934	
B. WASTES					
Depth	ft			24	
Volume	ft3			195,000	
Metric Tons	Mt			8,800	
Uranium (.71 percent U-235)	kg			11,200	
U-238	Ci			3.7	
Total Uranium	Ci			7.0	
Radium (Ra-226)	Ci			3,300	
Radon (Rn-222)	Ci	32.2	34.0	66.3	Located in the silo head space
Thorium (Th-230)	Ci			1,810	
C. RADON					
Chronic Emission	Ci/y			650	
Average Chronic Flux	pCi/m2-sec			2.2 E4	
Internal Generation Rate	Ci/d	6.3	4.8	11.1	
External Flux Post Failure	pCi/m2-sec	8.0 E4	6.0 E4	14.0 E4	

1.4 REGULATORY REQUIREMENTS

Removal actions, as described in 40 CFR 300.415, are primarily intended to abate, minimize, stabilize, mitigate, or eliminate a release or a threat of release of hazardous substances, pollutants, or contaminants prior to a final remedial action, if there is a threat to public health and welfare or the environment. Removal actions should be consistent with the anticipated long-term remedial action and contribute to the efficient performance of the long-term remedy to the extent practicable.

As stated in the National Contingency Plan (NCP) (40 CFR 300.415), DOE as the lead agency will develop a removal action plan. There are eight factors listed in 40 CFR 300.415 that are used to determine the need for a removal action. Of the eight factors listed in 40 CFR 300.415, the following regulations apply to the K-65 residues:

40 CFR 300.415(b)(2)(i) - Actual or potential exposure to nearby human populations, animals, or the food chain from hazardous substances, pollutants, or contaminants.

40 CFR 300.415(b)(2)(iii) - Hazardous substances, pollutants, or contaminants stored in drums, barrels, tanks, or other bulk storage containers, that may pose a threat if released.

40 CFR 300.415(b)(2)(v) - Weather conditions that may cause hazardous substances or pollutants to migrate or be released.

Current chronic emissions of radon from the K-65 Silos are estimated to result in an incremental lifetime risk of fatal lung cancer of 9×10^{-3} to a member of the general public (IT 1990). A tornado-induced structural failure of both silos could result in an initial uncontrolled release of approximately 66 Ci of radon, as well as some of the K-65 residues. This would result in an

incremental lifetime risk of fatal lung cancer of 1.4×10^{-4} to a member of the general public (Ijaz 1990)(Note: Ijaz 1990 uses a total radon inventory of 50 Ci). A spontaneous failure of the silos would result in a release of 33 Ci of radon (only one silo is assumed to fail). A continuing higher rate of radon release would follow upon the initial release in both cases until corrective action could be implemented by FMPC personnel. This would result in an incremental lifetime risk of fatal lung cancer of 9.2×10^{-7} to a member of the general public (Ijaz 1990)(Note: Ijaz 1990 uses a dome radon inventory of 50 Ci). The removal action will reduce the threat to the public and the environment from the threat posed by current chronic emissions and the exposure pathways associated with such a structural failure.

Since this action is not funded by Superfund under CERCLA, the statutory limits of $2 million and 12 months for implementation are not required, but may be considered for guidance.

1.5 REMOVAL ACTION OBJECTIVES

The objectives of this removal action are:

- to reduce routine emissions of radon from the K-65 silos
- to decrease, mitigate, or otherwise control the radon gas inventory in the K-65 silos head space so that a failure of the dome(s) will not result in a release of significant quantities of radon gas, which would pose a potential threat to the public;
- to decrease, mitigate, or otherwise control the threat of K-65 residues released in significant quantities as a result of dome failure caused by a tornado.

1.6 EVALUATION CRITERIA

Removal action alternatives will be evaluated with regard to the following criteria:

Effectiveness

- In protecting the public health (work force and general population) for the estimated 5 years prior to initiation of the final remedial action
- In protecting the environment
- In the reduction of toxicity, mobility, and/or volume of both the radon gas inventory and the K-65 residues
- In consistency with final action by retaining ability to conduct the proposed final remedial actions currently under consideration
- In compliance with ARARs

Implementability

- Technical feasibility, or reliance on proven technologies, methods, and materials
- Administrative ease of implementation, or their ability to obtain other agency approval and/or coordination
- Time required for implementation

Costs

- Cost, including capital costs

2.0 SITE CHARACTERIZATION

2.1 SITE BACKGROUND

The U.S. Atomic Energy Commission (AEC), predecessor to DOE, established FMPC for manufacturing uranium metal from natural uranium ore concentrates for U.S. government military needs. The production facility began operations in the early 1950s.

In 1951, National Lead Company of Ohio, Inc. (NLO), a wholly-owned subsidiary of National Lead Industries was chosen by AEC to manage operations and maintenance (O&M) for FMPC. In 1986, Westinghouse Materials Company of Ohio (WMCO), a wholly-owned subsidiary of Westinghouse Electric Corporation, assumed management of the site for a minimum 5-year period.

The FMPC site is located on 425 ha (1,050 acres) in a rural area approximately 32 km (20 mi) northwest of downtown Cincinnati, Ohio. The production area is limited to an approximate 55-ha (136-acre) tract near the center of the FMPC site. The villages of Fernald, Ross, New Haven, and Shandon are all located within 5 km (3 mi) of the site (Figure 1-1).

A variety of chemical and metallurgical processes are used at FMPC to manufacture uranium products. During the manufacturing process, high-quality uranium compounds are introduced into the FMPC processes at several points. Feed materials are dissolved in nitric acid, and the uranium is purified through solvent extraction to yield a solution of uranyl nitrate. Evaporation and thermal decomposition convert the nitrate solution to uranium trioxide (UO_3) powder. This compound is reduced with hydrogen to uranium dioxide (UO_2), and then converted to uranium tetrafluoride (UF_4) by reaction with anhydrous hydrogen fluoride. Uranium metal is produced by reacting UF_4 and magnesium metal in a refractory-lined reduction vessel. The primary uranium metal is then remelted with

scrap uranium metal to yield a purified uranium metal ingot. Various uranium metalworking processes also exist at the FMPC.

During the early 1950s, FMPC refinery processed pitchblende (uranium-rich ore) ore from the Belgian Congo. No chemical separation or purification was performed on the radium-rich ore before it arrived at the FMPC. One process stream was termed K-65, the residues of which were precipitated and separated per contract with African Metals. These residues were slurried from 1953 to 1955 to Silos 1 and 2 where they are currently stored. Two additional silos (3 and 4) were constructed in the same area but were never used for the K-65 residues.

The four silos were constructed in 1951 and 1952 for dewatering and storing radioactive waste effluent from the plant processing lines. The silos received waste residues primarily between 1952 and 1958. The sources of the waste included slurry from FMPC; 25,000 drums from a plant in St. Louis, Missouri; and 6,000 drums from a DOE storage site in Niagara Falls, New York. This report assumes the silos now contain approximately 8,800 Mt of residual solids that include approximately 3,300 Ci of radium and 1,810 Ci of thorium (Ijaz 1990). The radium-bearing residues emit radiation in the form of high energy alpha particles and decay to radon gas. Radon's daughter products are solids that emit high-energy alpha particles, and beta and gamma radiation (see Figure 2-1) (HEW, 1970).

By 1963, indications of exterior surface deterioration to the silos was apparent, and a repair program was begun. In 1964, repairs were made to the shot-crete coat, and an earthen embankment (berm) was constructed around Silos 1 and 2 to counterbalance the load from the silo contents. The berm also protected the walls from further weathering and acted as a radiation shield. Vents in the silos were sealed in 1979, and the berms were enlarged in 1983 to reduce erosion.

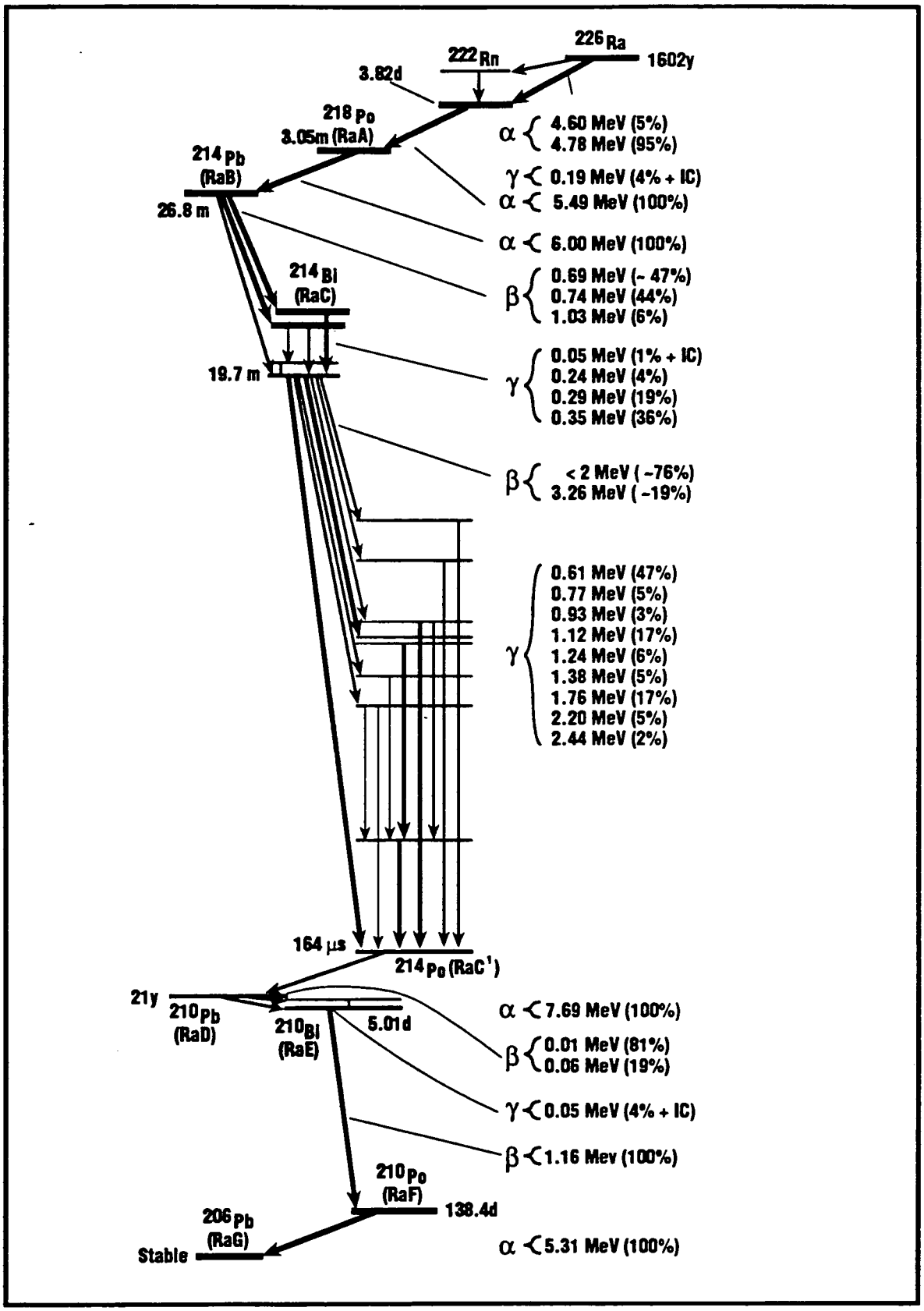

Figure 2-1
RADIUM DECAY CHART

1 ZSA 1990.3

In late 1985, Camargo Associates Limited performed a structural analysis of the silos that showed evidence of structural instability and recommended that some protective action be taken (Camargo 1986). In January 1986, 20-ft diameter, protective plywood covers for the domes of the silos were constructed and installed on Silos 1 an 2. In late 1987, a foam coating was applied to the domes of the silos to further reduce weathering and to reduce radon gas emissions. A radon treatment system was also developed and installed to remove radon from the silos prior to performing work on them.

In January 1990, Bechtel National, Inc. completed an additional structural analysis of Silos 1 and 2 (BNI 1990). Included in this analysis were predicted life expectancies of the silos and an evaluation of their structural integrity. The findings showed that the silo concrete had lost at least 60 percent of its design strength, and confirmed the Camargo finding that the silo domes might fail under tornado loads. The result of silo dome failure would be an immediate release to the environment of radon gas from the head space of the silos (the area between the top of the residues and the silo dome). There would also be the potential for K-65 residues to become airborne under tornado loading conditions.

Currently, Silos 1 and 2 produce approximately 11 Ci/d of radon in the head space. Together both silos produce approximately 4,100 Ci/y in the head space which represents approximately 4 percent of the total radon production within the bulk of the wastes. Most (96 percent) of the radon generated is contained within the residue matrix where it radioactively decays. Therefore this radon does not reach the head space of the silos. The concentration of radon in the head space has been measured to be as high as 3×10^7 pCi/L (WMCO 1988b). Using this concentration and the volume of the head space of each silo, it has been calculated that a relatively constant inventory of approximately 33 Ci of radon exist in the head space of each silo (see Section 2.3).

2.2 SITE SETTING

This EE/CA is intended to aid in the selection of a removal action that would mitigate the current chronic radon emissions and the potential for or consequences of failure of the K-65 silo domes and the subsequent airborne transport of contaminants. Therefore, only the immediate effects of the airborne release to the public and environment will be considered. Pathways of exposure such as groundwater or surface water migration will not be considered. Since FMPC is an operating plant with personnel available, this EE/CA assumes that corrective action could be implemented within 7 days after a dome failure.

The following description of the physical setting of the FMPC and surrounding area was derived from various existing reports. Two documents were relied on substantially (IT 1988, DOE 1988) and are not specifically referenced in the text. Other documents used to support individual statements are cited within the text.

2.2.1 Climate and Meteorology

Data from the Greater Cincinnati International Airport were used to describe the climate of the FMPC area. Wind-flow data from the Dayton Airport were used as a secondary data source.

The regional climate is continental, with temperatures ranging from a monthly average of 29°F in January to 75°F in July. The highest temperature recorded from 1950 through 1984 was 102°F in August 1962 and the lowest was -25°F in January 1977. The average number of days per year with a minimum temperature of 32°F or less is 110 days, and the average number of days with a maximum temperature of 90°F or above is 20 days per year. Frost depth ranges from 30 to 36 in. per year.

The average annual precipitation from 1955 through 1984 was 37.75 in. and ranged from 29.22 to 40.64 in. The highest

precipitation occurs during the spring and early summer; precipitation is lowest in late summer and fall. The average annual snowfall for the same period was 24.0 in., with the heaviest snowfall in January.

Figure 2-2 shows the wind rose for the Greater Cincinnati International Airport superimposed upon FMPC site. The most prevalent wind direction at the site is from the south-southwest. The wind blows from the combination of the south, south-southwest, and southwest directions approximately 34 percent of the time.

2.2.2 Vegetation and Wildlife

The FMPC site is in a region containing beech trees and mixed deciduous forests. Generalized habitats in the area have been described as grazed pastures, ungrazed pastures, pine plantations, riparian zones, a reclaimed fly ash pile, and woodlots (FMPC WMCO 1987). Forested areas occur along Paddy's Run and north of the production area, and contain ash, sugar maple, sycamore, and cottonwood trees. Grasses and herbs dominate the pasture areas and covered waste storage areas. Aquatic species such as cattails and rushes grow along drainage ditches. Area habitats support a number of species, although the habitats have not been described as unique.

Mammals in the FMPC area predominantly are the whitetail deer, eastern cottontail, fox squirrel, eastern chipmunk, woodchuck, and raccoon. Birds that inhabit open pasture and wooded and shrubby fields have been observed on site. Species include the red-winged blackbird, mourning dove, blue jay, tufted titmouse, song sparrow, and common yellowthroat.

FMPC is within the geographic ranges of several species that have been determined by the U.S. Fish and Wildlife Service to be endangered or threatened. These include the Indiana bat, bald

eagle, peregrine falcon, and northern wild monkshood (50 CFR 17.11 and 17.12). The cave salamander is recognized by the state as an endangered species (ODNR 1974). There are no critical habitats in the vicinity of the FMPC. The bald eagle and peregrine falcon do not nest in the counties surrounding the FMPC site and would occur only as rare transients along the Great Miami River. The northern wild monkshood has not been observed in the FMPC area.

During remedial investigation/feasibility studies (RI/FS) biological sampling, Indiana bats were not found on or adjacent to the FMPC, but were netted at a monitoring site 3 mi northeast of the FMPC boundary. Potential habitat areas for the Indiana bat along Paddy's Run range in quality from poor to excellent, with over 50 percent being fair. The cave salamander was not found within FMPC boundaries during RI/FS sampling. Marginal habitats for this species were identified along Paddy's Run.

A number of fish have been identified in the area, including minnows, creek chubs, and darters in Paddy's Run, and carp, gizzard shad, and sunfish in the Great Miami River. Fish populations in the Great Miami River are healthy and have not changed appreciably since 1984 (WMCO 1988a).

A study to assess the acute and chronic toxic effects of effluent from the FMPC on algae, invertebrates, and fish is being conducted as part of the RI/FS. The effects of the effluent on the macroinvertebrate community structure in the Great Miami River and Paddy's Run are also being examined as part of the RI/FS.

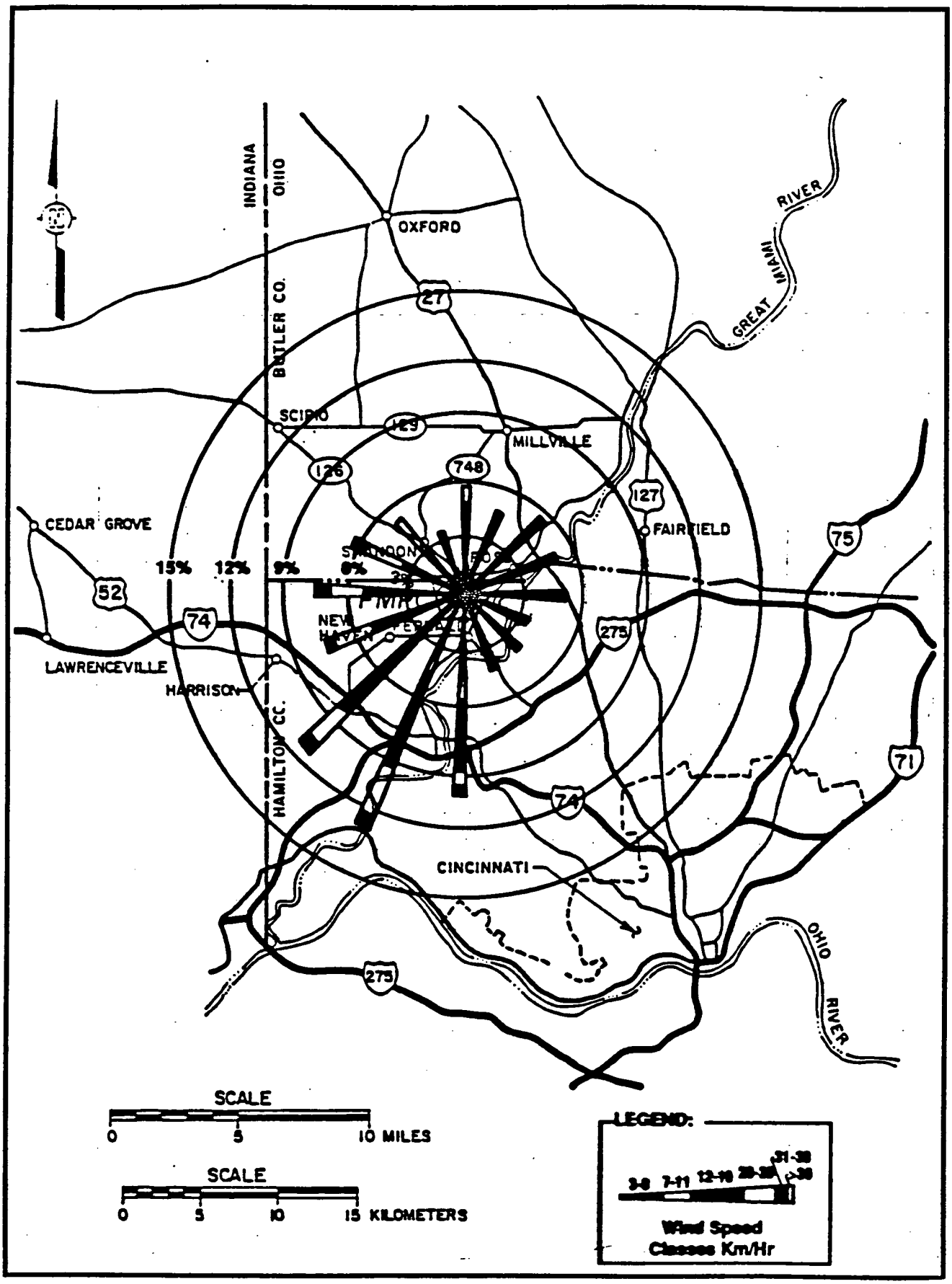

FIGURE 2-2
WIND ROSE FOR FMPC

2.2.3 Land Use and Population

The area surrounding FMPC is used primarily for agriculture, including dairy, beef, corn, and soybean production. Several industries are located south of the site. The Miami Whitewater Forest (a Hamilton County park) is located 5 mi southwest of FMPC.

Scattered residences and several villages, including Fernald, New Baltimore, Ross, and Shandon, are located near FMPC. The City of Cincinnati and its suburbs are 10 to 15 mi southeast of FMPC, and the town of Hamilton is 8 mi to the northeast. There is an estimated population of over 14,000 within a 5 mi radius of the site.

The area surrounding FMPC contains several sites of historical interest, but none are within the immediate waste storage study area. The National Register of Historic Places lists four prehistoric Indian sites within a 3 mi radius. These include the Adena Circle, the Demoret Mound, the Colerain Work, and the Dunlap Work. The closest site, the Colerain Work, is situated approximately 1 mi east of FMPC. There are no known sites of archaeological significance on the FMPC site.

2.3 ANALYTICAL DATA

Gas samples were taken from the interior of K-65 Silos 1 and 2 on November 4, 1987 (WMCO 1988b). Samples were taken in multi-layer gas bags and glass flasks. WMCO analyzed the samples taken in the glass flasks by evacuating a 1-L Lucas cell and then adding 10 mL of gas sample from a gas-tight syringe. Four samples were also taken to Mound Laboratories for analysis. The gas sample activities analyzed by both WMCO and Mound Laboratories were approximately 2.5×10^7 pCi/L for Silo 1 and 3.0×10^7 pCi/L for Silo 2. Since the Mound Laboratory and WMCO analyses were within

4 percent of each other, these values will be considered valid results for use in future calculations.

The following calculations were performed by WMCO (WMCO 1988b) based on the assumption that the samples were representative of the radon gas content in the head space of the silos. First, the total curie content of the silo head space was calculated based upon volume estimates of the head space.

The volume of the south silo (Silo 1): $V = \pi r^2 h$

where h = effective height of silo head space = 9.5 ft

r = radius of silo = 40 ft

Therefore

$$V = \pi(40)^2(9.5) \approx \mathbf{48{,}000\ ft^3}$$

The volume of the north silo (Silo 2):

where $h = 7.5$ ft $\quad r = 40$ ft

$$V = \pi(40)^2(7.5) \approx \mathbf{38{,}000\ ft^3}$$

The radon content of Silo 1 is then:

$$48{,}000\ ft^3 \times 28.3(L/ft^3) \times 2.5 \times 10^7(pCi/L) \times (1\ Ci/(10^{12}\ pCi)) = \mathbf{34\ Ci}$$

The radon content of the Silo 2 is:

$$38{,}000\ ft^3 \times 28.3(L/ft^3) \times 3.0 \times 10^7(pCi/L) \times (1\ Ci/(10^{12}\ pCi)) = \mathbf{32.3\ Ci}$$

For all practical purposes, the curie content of each dome head space is essentially the same. Therefore, the average value of the two curie contents will suffice for generation rate calculations for both silos. The average curie content for each silo is approximately 33 Ci.

The head space radon equilibrium inventory is calculated as follows:

$$R = (R_o/\ \lambda)\ (1-e^{-\lambda(t)})$$

where R = radon curie content the silo head space
R_o = radon addition to head space in Ci/sec
λ = the radon decay constant in sec^{-1}
t = time interval long compared to the half life of radon (this allows secular equilibrium to be assumed)

therefore, since

$\lambda = 2.1 \times 10^{-6}$/sec
t = 100 days or 8.64×10^6 sec
R = 33.2 Ci

33.2 Ci = (A_o/2.1 X 10^{-6} sec)(1-e^(-2.1 X 10^{-6}/sec X (8.64 X 10^6 sec))

$R_o = 6.95 \times 10^{-5}$ Ci/sec

The radon addition rate to the head space per silo per day for the radon would be:

R_o = (6.95 X 10^{-5} Ci/sec)(86,400 sec/d)
R_o = **6.0 Ci/d**

The exposed surface area of the K-65 residues inside the silo is:

$A = \pi r^2$

where: r = 40 ft

$A = \pi$ (40 ft x 12 in./ft x 2.54 cm/in.)^2 = 4.67×10^6 cm^2

The radon flux from the K-65 residue surface is:

$$\phi = R_o/A$$

$$\phi = (6.95 \times 10^{-5}\ Ci/sec)/(4.67 \times 10^{6}\ cm^2)$$

$$\phi = (1.49 \times 10^{-11}\ Ci/cm^2\text{-}sec) \times (1 \times 10^{12}\ pCi/Ci)$$

$$\phi = 15\ pCi/cm^2\text{-}sec \times 10^{4}\ cm^2/m^2$$

$$\phi = 1.5 \times 10^{5}\ pCi/m^2\text{-}sec$$

2.3.1 Environmental Fate

Data from the Greater Cincinnati International Airport satisfactorily characterize the climatic regime of the FMPC area. Wind-flow data from the Dayton Airport have been used as a secondary information source.

Figure 2-2 shows the wind rose for the Greater Cincinnati International Airport superimposed upon the FMPC site. The most prevalent wind direction at the site is from the south-southwest. The wind blows from the combination of the south, south-southwest, and southwest directions approximately 34 percent of the time.

The probability of a natural meteorological phenomenon such as the occurrence of a tornado in the area of FMPC is calculated in the University of Cincinnati Baseline Risk Assessment (Ijaz 1990).

2.3.2 Environmental Transport

The primary difficulty in modeling the transport of the radon and K-65 residues is the uncertainty of the specific environmental conditions at the time of release. When there is a continuous release over long periods of time, this difficulty is resolved by assuming average environmental conditions. However, if a sudden release of the material should occur as a result of some catastrophic failure of the silo, the environmental conditions present during the release will strongly influence the exposure pathways and the subsequent dose received by various receptors.

A number of key assumptions must be made to evaluate the possible transport of the contaminants off site. For example, in the event of failure due to a tornado, the initial release of radon from the head space of the silo would probably not result in significant exposures from radon gas; the extreme wind speeds and atmospheric turbulence would quickly disperse and dilute the radon gas, however the K-65 residues could be carried from the silo into neighboring areas. If the silos were to fail under relatively calm atmospheric conditions, radon would then be the primary contaminant. The total volume of radon in the head space of the silos would be released instantaneously and carried into surrounding areas without the benefit of large-scale dilution. The K-65 residues would probably remain stable beneath the collapsed silo dome and would not be of immediate concern.

2.3.3 Potential Risks

Direct gamma radiation, release of the K-65 residues or release of radon both from the residues stored and the radon accumulated in the K-65 silos at FMPC could result in a radiological hazard to humans and the environment. Baseline risk assessments have been conducted by both IT (IT 1990) and the University of Cincinnati (Ijaz 1990).

Source Terms

A baseline risk assessment (Ijaz 1990) indicates that radium, thorium, uranium and radon are the major contaminants of concern. The K-65 Silos contain approximately 8,800 Mt of residual solids (IT/ASI 1988), which include approximately 3,300 Ci of radium, 1,810 Ci of thorium (Ijaz 1990), and 7 Ci of uranium .

The radium decays to radon gas, emitting radiation in the form of high-energy alpha particles (see Figure 2-1). Both silos emit a

total of approximately 1.7 Ci/d (650 Ci/y/365 d) of radon, the radon flux is calculated as follows:

$$\frac{(650\ \text{Ci/y} * \text{E12 pCi/Ci} * 1\ \text{y}/3.1536\ \text{E7 sec})}{934\ \text{m}^2} = \mathbf{2.2 * E4\ pCi/m^2\text{-}sec}$$

Concentrations of radon in the head spaces are as high as 3×10^7 pCi/L, or approximately 33 Ci of radon per silo. There is considerable uncertainty in the radon emission rate, as well as in the total inventory available in the free space of the dome.

Radon is an odorless, colorless, inert gas. Radon as a gas and its radioactive daughter products in aerosol form may decay in the lungs when inhaled.

Release Mechanisms

Radon gas generated by the decay of the K-65 residues accumulates in the head space inside the silos. It is released to the atmosphere because the K-65 Silos exchange air with the outside environment through leaks and cracks in the silo domes. The reason for the air exchange is the expansion and contraction of the air mass caused by changes in the ambient temperature.

In the event of a spontaneous dome failure, the radon inventory in the head space would be available for release. Failure is considered any significant loss in the containment function of the silos which would allow the rapid release of the radon and does not require a full dome collapse.

In the event of a tornado, particles from the residues containing radium, thorium, and uranium may also be suspended in the air (Ijaz 1990). Inhalation of radium could result in lung cancer, bone cancer, osteitis, skin damage, or blood dysrasias. Radium also

damages the body by radiation after replacing calcium in the bone. The highly toxic effect of insoluble uranium and thorium compounds is due to the lung irradiation that is caused by the inhaled particles. Inhaled soluble particles are deposited in bone, but no cases of cancer directly resulting from such deposits have been recorded.

Exposure Pathways

Ultimately, the wind will be the mechanism of transport into the environment, either by the suspension of particulates and their subsequent removal from the failed dome area or by continuous removal of radon gas from the silo area. Depending upon atmospheric conditions at the time of release, the diffusion of radon gas and dispersion of particulate matter could have an impact on surrounding areas several kilometers away through various exposure pathways. Of these, only inhalation is considered significant. External exposure should be considered as a pathway, both for chronic and acute releases. Only inhalation and external exposure will be considered in any detail, since the other ingestion pathways would be secondary in nature.

Potential Receptors

Three groups are considered to be potential receptors from these exposure pathways (Ijaz 1990):

- the work force within the fence line @ 100 m
- the nearest residents @ 500 m
- the nearest populations @ 14,500 m

3.0 REMOVAL ACTION OBJECTIVES

Section 3.1 explains the statutory requirements of the removal action at FMPC. Section 3.2 defines the scope and purpose of the removal action. Section 3.3 explains which federal, state, and local standards are applicable or relevant and appropriate.

3.1 STATUTORY REQUIREMENTS

This action is primarily directed by the statutory provisions of Sections 104, 106(a), and 120(a)(1) of CERCLA (42 U.S.C. 9604, 9606(a), and 9620(a)(1)), and the NCP regulatory policies (40 CFR 300). Summaries of these and other statutory objectives are presented in this section.

3.1.1 CERCLA Requirements

The K-65 residues contained in Silos 1 and 2, as well as the radon gas produced by the radioactive decay of radium, are considered to be hazardous substances under CERCLA, Sections 101 (14) and (33).

The authority to respond to releases or to the substantial threat of release of any hazardous substance into the environment is contained in CERCLA Sections 104 and 106. Section 104 (a)(1) authorizes EPA to undertake a removal or remedial action, unless it is determined that such action will be conducted properly by the owner or operator of the facility or another responsible party. Executive Order 12580 (52 FR 2923) delegates the response authority of Section 104 to the U.S. Secretary of Energy for actions taken at DOE facilities. However, EPA maintains response authority if an action is carried out in response to an enforcement order issued under Section 106.

Section 104 (c)(1) specifies that a removal action cannot exceed $2 million or take longer than 1 year if the action is financed

with Superfund monies; extensions are granted under several circumstances. These limits do not apply to the K-65 silo removal action because the response will not be financed with Superfund monies. In addition, removal actions performed pursuant to Section 106 (or 122) of CERCLA are not subject to these restrictions, as specified in NCP (Section 300.415(j)).

Section 121 of CERCLA requires that remedial actions comply with ARARs for any hazardous substance, pollutant, or contaminant that will remain on site, unless waiver of an ARAR is justified. The EPA has extended this requirement to include removal actions, as a matter of regulatory policy, although it has added several limitations. As specified in NCP Section 300.415(i) (formerly Section 300.65):

> "Fund-financed removal actions under CERCLA Section 104 and removal actions pursuant to CERCLA section 106 shall, to the extent practicable considering the exigencies of the situation, attain applicable or relevant and appropriate requirements under federal environmental or state environmental or facility siting laws. Waivers described in NCP Section 300.430(f)(1)(ii)(C) may be used for removal actions. Other federal and state advisories, criteria, or guidance may, as appropriate, be considered in formulating the removal action (see NCP Section 300.400(g)(3)). In determining whether compliance with ARARs is practicable, the lead agency may consider appropriate factors, including:
>
> (1) The urgency of the situation; and
> (2) The scope of the removal action to be conducted."

The scope of the ARARs, and their potential influence on removal action options, are described in Section 3.3.

In many similar situations, removal actions are conducted at sites that will also undergo further remedial action. In such cases, EPA requires that the removal action be consistent with the final remedy for the site. A removal action may be considered consistent if it does not hinder or interfere with the planned remedial action or if it contributes to the action in some positive

way. If a final remedy has not yet been determined, a range of feasible alternatives may be considered.

3.1.2 Requirements of FFCA and Other Agreements

FFCA signed by DOE and EPA on July 18, 1986, established a framework to ensure that environmental effects from past and current operations at the Fernald facility are adequately investigated and that appropriate response actions are developed and implemented. A comprehensive RI/FS is now under way and separate reports will be prepared for each of the five operable units of the FMPC. Operable Unit 4 consists of the K-65 Silos 1 and 2 and the Metal Oxide Silo 3.

FFCA directed DOE to provide EPA with a plan and implementation schedule for initial remedial measures for the following:

- Interim control of radioactive emissions, including radon gas and radon decay product emissions from the K-65 Silos
- Interim controls to ensure the structural integrity of the K-65 silos
- A radon and radon decay product monitoring program for the fence line and off-site environs
- Measures to be undertaken in the event of unplanned releases from the K-65 Silos to the environment

This agreement also directed DOE to comply with the radionuclides emission standard (40 CFR 61.92) which states, "Airborne concentrations of radionuclides shall not exceed those amounts that cause a whole body dose equivalent of 25 millirem (mrem) per year and 75 mrem per year to a critical organ of any member of the public." (This standard was amended by EPA in December 1989; the level for effective dose equivalent was reduced to 10 mrem/y.) It also directs DOE to establish monitoring and emission controls. This element of the agreement appears to address facility-wide

emissions, and not only those specific to the K-65 silos. Therefore, any removal action for the K-65 silos must be designed and implemented within the framework of these facility-wide restrictions.

DOE and the State of Ohio entered into a consent decree on December 2, 1988, which provided for the abatement of water pollution and hazardous waste violations.

FMPC was added to the National Priorities List (NPL) on November 21, 1989 (54 FR 48184).

The Consent Agreement under CERCLA Section 120 and 106(a) signed by EPA Region V and DOE on April 9, 1990 established a new and broader framework for removal and remedial actions. It specifies the scope and schedule for the removal action for Silos 1 and 2 presented in the Appendix. Key elements of the scope are an EE/CA for the removal action for Silos 1 and 2 and evaluation of the feasibility of the construction of a protective structure enclosing Silos 1 and 2 (see Section 5.0 for this evaluation). This agreement also integrates the statutory requirements pertaining to cleanup under CERCLA and the Resource Conservation and Recovery Act (RCRA), as will be explained later in this section.

The agreement also establishes that DOE will perform removal actions pursuant to Sections 104, 106(a), and 120(a)(1) of CERCLA; Sections 6001, 3008(h), 3004(u), and 3004(v) of RCRA; Executive Order 12580 (52 FR 2923); and the Atomic Energy Act. Four removal actions are described in the agreement, as well as a process for undertaking actions for newly discovered problems; the K-65 silos are covered under the fourth removal action. Since the K-65 silos are not known to contain RCRA solid or hazardous wastes, we assume that references to RCRA authorities for the removal actions are not intended to apply to the K-65 silos.

3.1.3 RCRA Requirements

The K-65 residues contained in the silos are classified as by-product material under Section 11 of the Atomic Energy Act. Section 1004 (27) of RCRA specifically excludes these materials as defined by the amended Atomic Energy Act, from the definition of solid and hazardous waste. Consequently, these wastes are exempted from the permitting and waste management standards under RCRA, unless the residues were mixed with materials that meet the definition of hazardous waste. Such radioactive mixed wastes are subject to RCRA, as explained in an EPA policy statement issued to all NRC licensees (EPA 530/SW-90-016). The K-65 residues contain a significant amount of lead. Because this lead originates in the ores from which uranium was extracted, it is classified as part of the by-product material exempted from regulation as a solid or hazardous waste.

The April 9, 1990, Consent Agreement between EPA and DOE cites both CERCLA and RCRA, particularly the corrective action authorities of RCRA Sections 3008 (h) and 3004 (u) and (v). It identifies FMPC as being an existing hazardous waste management facility under RCRA. This agreement could have resulted in a dual, and potentially inconsistent, set of regulatory and cleanup criteria. Section VIII of the agreement resolves this potential conflict by establishing a RCRA/CERCLA integration framework. Compliance with the activities specified in the agreement will be considered by EPA to satisfy CERCLA and RCRA corrective action requirements. Paragraph D of Section VIII also states that the agreement does not alter DOE's authority to conduct removal actions pursuant to Section 104 of CERCLA.

While such integration of RCRA and CERCLA requirements should remove any potential for inconsistency, citation of EPA-RCRA guidance and policy as one set of the framework policies for the agreement [see Section IV.A.(2)] may introduce inconsistencies as

specific options for **remedial** action and unit closure are developed. However, Section IV.B.(1) eliminates this potential problem for the **removal** actions, including those for the K-65 silos; it states that the removal action requirements must be consistent with NCP procedures. This is reinforced by the fact that the silos are not known to contain wastes subject to regulation under RCRA.

3.1.4 National Environmental Policy Act (NEPA) Requirements

The National Environmental Policy Act (NEPA) requires every federal agency to consider environmental factors in the decision-making process for all major federal actions significantly affecting the quality of the human environment. EPA has determined that compliance with NEPA may be achieved for removal actions by conducting an EE/CA. This process allows for an evaluation of alternatives, an assessment of the environmental impacts of the action, and an opportunity for public comment. This EE/CA analysis is modeled after the RI/FS process, which meets the criteria required for NEPA compliance.

The Department of Energy has determined that certain categories of DOE actions normally do not individually or cumulatively have a significant effect on the human environment, and therefore normally do not require an environmental assessment or environmental impact statement. DOE has determined that CERCLA removal actions may be categorically excluded from NEPA review (DOE Compliance with National Environmental Policy Act: Amendments to Guidelines, April 6,1991: 55 CFR 13064). The FMPC facility and therefore the proposed removal action are not located within a floodplain and this proposed removal action will not have an adverse environmental impact on any wetlands. In addition, the proposed removal action will not affect any sensitive areas such as archeological sites, critical habitats, or sole source aquifers. DOE believes that this

removal action will have only a positive environmental impact, and will substantially mitigate an existing environmental problem.

3.2 SCOPE AND PURPOSE

As previously stated, the purpose of a removal action under Section 104 of CERCLA is to abate, minimize, stabilize, mitigate, or eliminate the release or threat of release of hazardous substances, pollutants, contaminants, or hazardous constituents. Removal actions should also be consistent with anticipated long-term remedial actions, and should contribute to the efficient performance of the long-term remedy to the extent that this is practicable.

The public health and the environment is threatened by the potential for:

- continuous radon releases occurring as the gas diffuses through silo domes;
- puff release of dome contents (one silo only during very stable meteorological conditions) as a result of spontaneous dome failure followed by continuous radon release at a higher rate (dome no longer retards diffusion of gases); and
- puff release of dome contents (both domes) as a result of a tornado-induced failure followed by a continuous radon release at a higher rate (domes no longer retard diffusion of gases).

The objectives of the proposed removal action for the K-65 Silos 1 and 2 are:

- to reduce routine emissions of radon from the K-65 silos to the maximum extent practical within the context of the removal action

- to decrease, mitigate, or otherwise control the radon gas inventory in the K-65 silos so that a failure of the dome(s) will not result in a release of significant quantities of radon gas, which would pose a threat to the public;
- to decrease, mitigate, or otherwise control the threat of K-65 residues released in significant quantities as a result of dome failure caused by a tornado.

This removal action will protect public health and the environment. While this action is not restricted to a total cost of $2 million dollars and completion within 12 months from start-up, these guidelines are used in this EE/CA as points of departure for evaluating various technical strategies.

Alternatives selected for this removal action may either focus on the prevention of failure of the silo domes or mitigation of the results of a structural failure by reducing the equilibrium radon inventory. Alternatives that focus on the reduction of the radon inventory must also prevent continuous release of radon after dome failure, as well as the release of the K-65 residues caused by a tornado-induced failure. Alternatives that prevent structural failure or control the radon inventory will also control the chronic radon emissions.

The chronic emission of radon gas through the domes of the silos is clearly the most significant existing environmental threat. The selected alternative must reduce the rate of uncontrolled radon emission to the maximum extent practical within the scope and time frames associated with removal actions. Elimination of a tornado-induced dome failure is a secondary objective, and mainly associated with contingency planning activities.

The scope of the removal action was determined after a rigorous screening of alternative options. Section 4.0 of this EE/CA presents seven different removal action alternatives, and

Section 5.0 presents an evaluation of these alternatives. Each alternative is evaluated using the following set of criteria:

- Effectiveness
  - in ensuring protection of public health, including site workers
  - in ensuring protection of the environment
  - in reducing the toxicity/mobility/volume of the waste
  - in consistency with the final remedy for the site
  - in compliance with ARARs
- Implementability
  - technical feasibility
  - administrative feasibility
  - timeliness
- Cost

EPA regulatory policy for removal actions also requires that all ARARs be identified and attained to the extent practicable. ARARs are identified and evaluated in Section 3.3, of this EE/CA.

NCP Section 300.415(b)(3) requires the lead agency (in this case, DOE) to determine whether a removal action is appropriate, and, if so, to begin as soon as possible to "...abate, prevent, minimize, stabilize, mitigate, or eliminate the threat to public health or welfare or the environment...." Under NCP Section 300.415(b)(4), whenever a planning period of at least 6 months exists before on-site activities are initiated, the lead agency must conduct an EE/CA, or its equivalent. This report fulfills that requirement.

3.3 COMPLIANCE WITH ARARs

3.3.1 Background

Section 121 of CERCLA requires that remedial actions result in attaining an ARAR level or standard of control for any hazardous substance, pollutant, or contaminant that will remain on the site, unless waiver of an ARAR is justified. EPA extended this

requirement, as a matter of regulatory policy [see NCP 300.415(i)], to Superfund-financed removal actions under CERCLA section 104 and actions pursuant to CERCLA section 106. The Agency provides for several limitations to this obligation. EPA policy also requires that the implementation of remedial actions comply with ARARs to protect public health and the environment.

Because the 1990 Consent Agreement establishes that this removal action is being conducted pursuant to CERCLA Section 106, as well as under DOE's authority under CERCLA section 104, the action must, to the extent practicable considering the exigencies of the situation, attain ARAR standards under federal or state environmental or facility siting laws. In addition, other federal and state advisories, criteria, or guidance may, as appropriate, be considered in formulating the removal action.

In determining whether compliance with ARARs is practicable, appropriate factors, including the following, are considered:

(1) the urgency of the situation and

(2) the scope of the removal action to be conducted.

Criteria for selecting a removal action that does not meet an ARAR are stated in NCP Section 300.430(f)(1)(ii)(C).

NCP (Section 300.5) defines <u>applicable</u> requirements as

"those cleanup standards, standards of control, and other substantive requirements, criteria, or limitations promulgated under federal environmental or state environmental or facility siting laws that specifically address a hazardous substance, pollutant, contaminant, remedial action, location, or other circumstance found at a CERCLA site. Only those state standards that are identified by a state in a timely manner and that are more stringent than federal requirements may be applicable."

The NCP also defines <u>relevant and appropriate</u> requirements as

"those cleanup standards, standards of control, and other substantive requirements, criteria, or limitations promulgated under federal environmental or state environmental or facility siting laws that, while not "applicable" to a hazardous substance,

pollutant, contaminant, remedial action, location, or other circumstance at a CERCLA site, address problems or situations sufficiently similar to those encountered at the CERCLA site that their use is well suited to the particular site. Only those state standards that are identified in a timely manner and are more stringent than federal requirements may be relevant and appropriate."

Relevant and appropriate requirements are intended to carry the same weight as applicable requirements. The NCP identifies the following federal statutes as the sources for regulations that may be potential ARARs:

Toxic Substances Control Act (TSCA)
Safe Drinking Water Act (SDWA)
Clean Air Act (CAA)
Clean Water Act (CWA)
Marine Protection Research and Sanctuaries Act (MPRSA).

Three classifications of ARARs are considered:

1. ambient or chemical-specific;
2. location-specific; and
3. performance, design, or other action-specific.

Chemical-specific ARARs are usually health- or risk-based numerical values, or methodologies which, when applied to site-specific conditions, result in numerical values. These values establish the acceptable amount or concentration of a specific pollutant that may be found in, or discharged to the soil, water, or air.

Location-specific ARARs are restrictions placed on the concentrations of hazardous substances or the conduct of activities solely because they occur in special locations. Action-specific ARARs are usually technology- or action-based requirements or limitations on the specific response action taken.

In the absence of federal- or state-promulgated regulations, there are many nonpromulgated criteria, advisories, guidance values, and proposed standards that, while not legally binding, may serve as useful guidelines for setting protective cleanup levels. These are not potential ARARs, but are classified as "to be considered TBC) necessary for protection" by EPA; their use is discretionary.

Identification and evaluation of ARARs is an ongoing process; as removal or remedial action planning and implementation progress, additional requirements might become pertinent.

ARARs (and TBCs necessary for protection), pertaining both to contaminant levels and to performance or design standards, should generally be attained at all points of potential exposure, or at the point specified by the ARAR. At each potential point of exposure, a reasonable maximum exposure scenario should be assumed, using best professional judgment, and cleanup goals should be set accordingly to ensure adequate protection.

As explained in Office of Solid Waste and Emergency Response (OSWER) Directive 9234.1-01, "non-engineered" or "exposure" controls may be used in certain circumstances in combination with "engineered" controls and/or treatment in the management and cleanup of the site, where it is determined that such controls are necessary to be protective (EPA 1988). In such circumstances, where exposure controls are used, restrictions should be employed to ensure that the controls remain in place, that they remain protective, and that they are effective in preventing exposure to hazardous substances for as long as the substances at the site remain hazardous.

Section 121 (e) of CERCLA and NCP Section 300.400(e) exempts any response action conducted entirely on site from having to obtain a federal, state, or local permit, when the action is carried out in compliance with Section 121. In general, on-site actions must

comply only with the substantive aspects of ARARs and not with their corresponding administrative requirements.

ARAR identification, as explained in the following sections, included consideration of regulatory standards issued by the State of Ohio. While certain Ohio regulations may require both substantive and administrative procedures (i.e., permits), Section 121 (e) of CERCLA and the NCP exempt all on-site actions from the need to obtain permits.

3.3.2 ARARs for the K-65 Silo Removal Action

A requirement under other environmental laws other than those discussed above may be either "applicable" or "relevant and appropriate," but not both. Identification of ARARs must be done on a site-specific basis. It involves a two-part analysis: first, a determination of whether a given requirement is applicable; second, if it is not applicable, a determination of whether it is both relevant and appropriate.

Attachments 1 through 3 present a list of potential ARARs and TBCs; much of these lists were developed from work performed as part of the ongoing RI/FS study for final remedial action for Operable Unit 4 (DOE 1990). The attachments contain standards issued by a number of federal agencies, as well as standards issued by several Ohio state agencies. Attachment 1 contains chemical-specific ARARs, Attachment 2 contains location-specific ARARs and Attachment 3 contains action-specific ARARs.

CERCLA requires that ARARs be met at the conclusion of remedial action, and that they be achieved to the extent practicable for removal actions. Many removal actions are elements of larger-scale remedial actions. The K-65 silo removal action is typical of this pattern, it is not expected to satisfy all of the ARARs pertinent to a completed, full-scale remedial action. Rather,

only those ARARs directly pertinent to the immediate objectives of the removal action will be met. For this reason, the list of ARARs for the alternatives under consideration for the K-65 silos (presented in Table 3-1) is less extensive than the list presented in Attachment 2.

Most significant in this list are the requirements that radon emissions from any source be less than 20 pCi/m^2-sec, and that effective dose equivalents to the general public from DOE facility operations be less than 25 mrem/y for all pathways and less than 10 mrem/y for airborne release other than radon. Annual average concentrations of radon in the air both inside and outside the DOE facility should be less than 3×10^{-9} μCi/mL, and should not exceed 100×10^{-9} μCi/mL in on-site air at any time. Concentrations of thorium should be less than 4×10^{-14} μCi/mL, uranium should be less than 1×10^{-13} μCi/mL, and radium should be less than 1×10^{-12} μCi/mL. The ALARA process must also be used in planning and conducting the removal action. Worker health and safety must be protected during the removal action in compliance with several DOE and OSHA orders.

TABLE 3-1

ARARs & TBCs

ARAR Citation	Requirement
40 CFR 61 Subpart Q	No source can emit >20 pCi/m^2-s of ^{222}Rn into the air
40 CFR 61 Subpart H	Emissions of radionuclides other than ^{222}Rn and ^{220}Rn must be less than amount needed to cause an effective dose equivalent to general public of 10 mrem/y
29 CFR 1910, 1926, 1904. DOE Orders 5480.1B, 5480.4 & 5480.11	Establishes worker health and safety standard for both private sector and DOE operations. These will be used in planning jobsite activities.
10 CFR 61	effective dose < 75 mrem/y (thyroid) < 25 mrem/y (total body)
10 CFR 20	effective dose < 1.25 rem/qtr (site workers) < 0.1 rem/y[1] (whole body continuous) < 0.5 rem/y[1] (whole body acute)
DOE Order 5820.2A	effective dose < 25 mrem/y (all pathways, general public)
DOE Order 5400.5	* effective dose equivalent <100 mrem/y[2] from all pathways * effective dose equivalent <10 mrem/y for air pathway * ^{222}Rn should be <3 x 10^{-9} μCi/mL in ambient air outside facility * ^{230}Th should be <4 x 10^{-14} μCi/mL * ^{238}U should be <1 x 10^{-13} μCi/mL * ^{226}Ra should be <1 x 10^{-12} μCi/mL * follow ALARA process * ^{222}Rn should be <3 x 10^{-9} μCi/mL in on-site air (Annual Average) * ^{222}Rn should be <100 x 10^{-9} μCi/mL in on-site air (instantaneous)

TABLE 3-1 (continued)

ARAR Citation	Requirement
40 CFR 192	* releases of ^{220}Rn and ^{222}Rn should be <20 pCi/m^2-sec * dose equivalent to public (radon emissions excepted: <25 mrem/y (whole body) <75 mrem/y (thyroid) <25 mrem/y (any other organ)
OAC 3701-38-01 thru -39	* ^{222}Rn exposure for workers should be $\leq 1 \times 10^{-7}$ μCi/mL (air) in a 40 hour period over a 7 day week ^{222}Rn exposure for the general public should be $\leq 3 \times 10^{-9}$ μCi/mL
OAC 3745-17-02	Reasonably available control measures should be used for fugitive dust control during any waste transfer/handling activities

[1] to the general public in unrestricted areas, due to the land disposal of radioactive waste

[2] to the general public

4.0 REMOVAL ACTION ALTERNATIVES

4.1 DEVELOPMENT OF INITIAL ALTERNATIVES

The selection of the alternatives in this report was made through implementation of techniques utilized in the Value Engineering five phase job plan. The job plan phases are:

1. Information phase - the objective of this phase is to gather and analyze information on the study subject.
2. Speculation/Creative phase - the objective of this phase is to generate a large quantity and variety of "solutions" for the study subject. In this phase no judicial analysis is permitted and all ideas are acceptable. A "brain storming" session was utilized in the creative phase of this study.
3. Analysis phase - initial evaluation and screening of ideas are performed in this phase. Alternatives are selected which undergo further development.
4. Development phase - selected alternatives are further developed to provide a basis for detailed comparative analysis and a recommended alternative is selected.
5. Proposal/Presentation phase - this report is the organized compilation of data and analyses to support the approval and commitment of the appropriate decision makers.

Alternatives selected for this removal action may focus on either preventing silo dome failure or on mitigating the results of a structural failure by reducing the equilibrium radon inventory and ensuring the containment of the K-65 residues. Radon inventory reduction may focus on either processing the gases as generated or reducing radon flux into the dome head space while containment of the residues may require a cover over the residues.

Alternatives preventing structural failure resulting from tornado loads must also consider the failure of the domes due to continued degradation of the concrete. Alternatives selected that focus on the elimination of the radon inventory must also prevent continuous release of radon after dome failure and the release of K-65 residues in the case of failure resulting from a tornado. In addition, the alternatives must reduce or eliminate chronic radon emissions.

The following alternatives are to be considered for the K-65 silo removal action:

- Alternative 1: No action
- Alternative 2: Construction of tornado resistant enclosure
- Alternative 3: Relocation of residues
- Alternative 4: Construction of light-structure enclosure with continuous radon removal
- Alternative 5: Covering the K-65 residues(5 options)
- Alternative 6: Reduction of radon inventory

- Alternative 7: Administrative controls

4.2 SUMMARY DESCRIPTION OF INITIAL ALTERNATIVES

4.2.1 Alternative 1: No Action

Under the no-action alternative, no abatement, remediation or treatment activities would occur at the K-65 Silos. Without a dome failure, the relative risk to the general public and the environment would not change from those currently posed.

4.2.2 Alternative 2: Construction of Tornado-Resistant Enclosure

This alternative consists of constructing airtight, tornado-resistant enclosures to protect the silo domes from tornado loads. The enclosures would prevent tornado loads from reaching the domes, which do not have sufficient strength to withstand such loads. The enclosures would also prevent radon gas and K-65 residue release to the environment should the domes collapse due to continued material degradation. The enclosure would reduce chronic radon emissions. Under this alternative, a tornado-resistant enclosure would be constructed over each of the silos containing K-65 residues (see Figures 4-1 through 4-3). The foundation of each enclosure will rest on 16 3-ft diameter drilled concrete piers. The piers will be evenly spaced around each silo at a distance of 54 ft from the silo centerline. The foundation itself will be a continuous, reinforced concrete ring beam that will be anchored to

the piers at grade elevation. A layer of clay will be placed over the beam between the silo wall and the ring beam to minimize diffusion of radon gas into the beam.

Each enclosure will be comprised of a space truss with 1/2-in.-thick steel plate welded or bolted to the surface. The trusses will be fabricated on site and lifted into place with a crane. The skeletons will be anchored to the foundations and the plating will be attached. The enclosure will be constructed such that there is an air-tight seal between the steel plating and the concrete ring beam.

Access ports will be provided to allow sampling of the enclosure environment, and fittings will be provided to accommodate the existing radon treatment system. All access ports and fittings will be tornado-resistant.

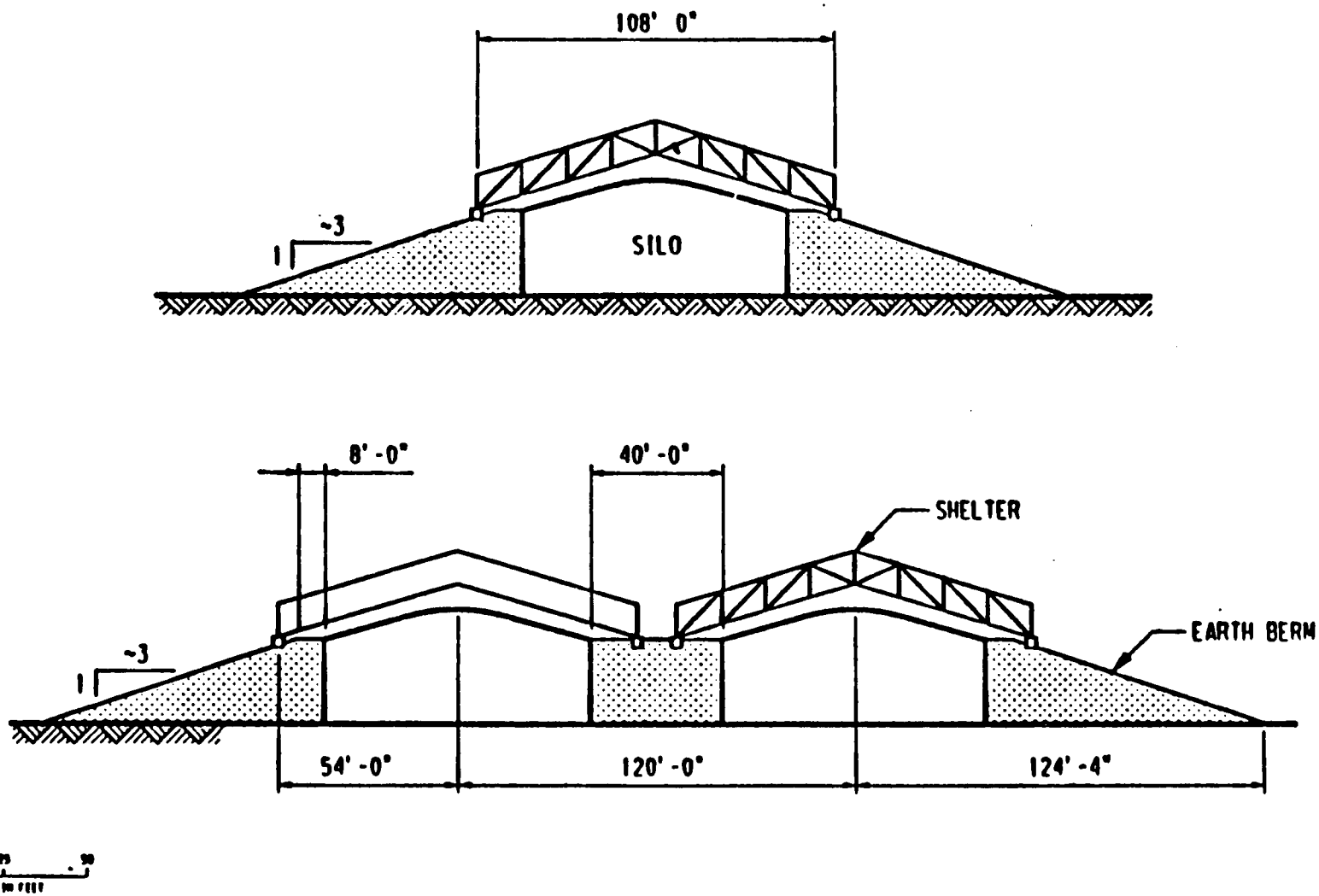

Figure 4-1
ELEVATION
TORNADO-RESISTANT SHELTER STRUCTURE

1 27 2043.1

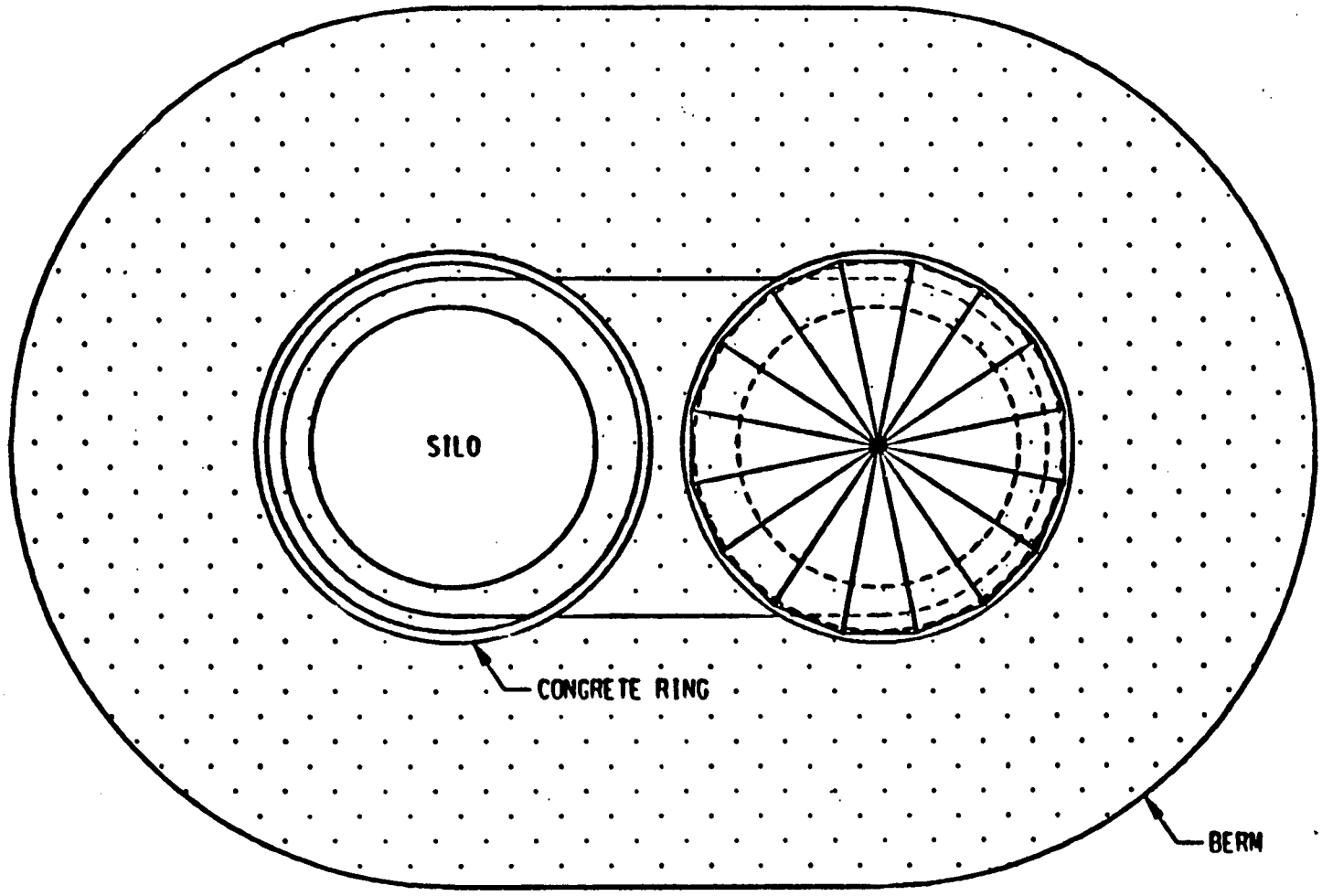

Figure 4-2
PLAN VIEW
TORNADO-RESISTANT SHELTER STRUCTURE

1 27 2043.2

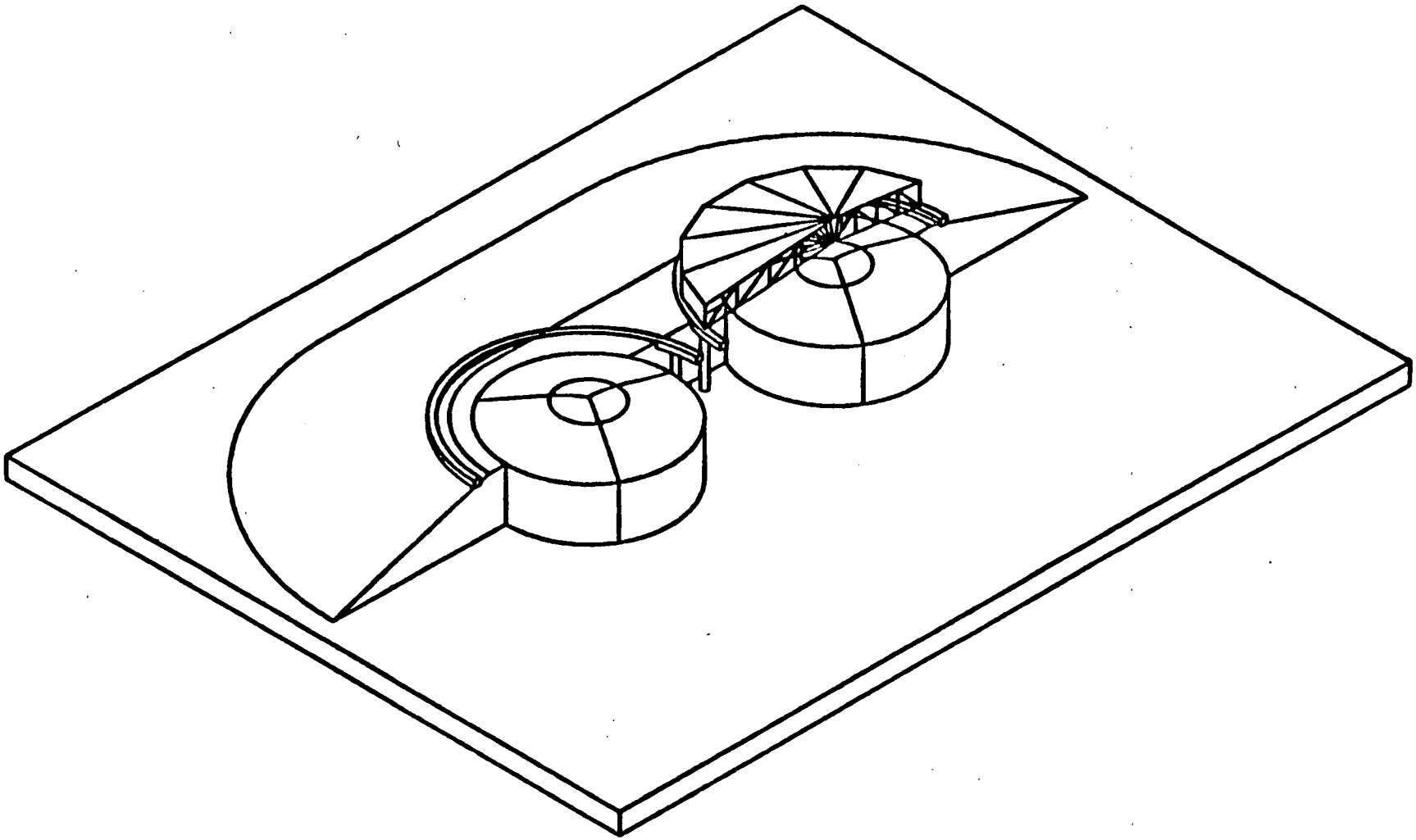

Figure 4-3
ISOMETRIC
TORNADO-RESISTANT SHELTER STRUCTURE AT FERNALD

1 27 2043.3

The existing radon treatment system will be modified to allow the purging of radon gas from the enclosures as well as from the silos. The existing rainwater drainage system will be removed and replaced with a new drainage system to minimize erosion.

4.2.3 Alternative 3: Relocation of Residues

This alternative involves the removal and interim storage of the K-65 residues now contained in Silos 1 and 2. The residue results from raffinate slurries that were pumped into the K-65 silos where the solids settled and the free liquid was decanted through a series of valves placed at 1-ft intervals along the silo wall. This resulted in a densely compacted, irregular granular material.

The full scope of this alternative includes construction of surface/subsurface engineered canister units retention (**SECURE**) containers, siting, design and construction of an interim storage facility (ISF), construction of an air-tight temporary enclosure (ATE), removal of residues from Silos 1 and 2 by mechanical or hydraulic means, and transporting the materials in containers to the ISF. No disposition of the existing silo structures or the surrounding earthen berm is included in this alternative because disposition will be included in the final site remedial action.

An ATE will be installed over the silos during the removal activities to ensure the isolation of the removal efforts from the public and the environment. This is necessary to provide a high

level of protection against accidental releases of radioactive material. The ATE will be constructed on the extension of the embankment such that a failure of the silo wall and the embankment immediately adjacent to the wall will not effect the stability of the ATE. Heavy equipment employed atop the embankment will require drilled piers and/or cribbing to distribute loads on the embankment.

The two methods of material removal under consideration are mechanical and hydraulic. In the case of mechanical removal, the dome of the silos would first be removed and would be stored as waste. Then remotely operated construction backhoes and conveyors, and trucks would be used to fill the **SECURE** containers. As each container is filled, it would be capped and moved out of the ATE and into the ISF and a new container would be brought into the ATE. Approximately 1,100 **SECURE** containers would be required.

The second method considered for residue removal is hydraulic mining. This option also requires removal of the silo domes. The hydraulic mining tools would again be remotely operated and the residues would be slurried to a dewatering/drying facility prior to being deposited into the **SECURE** containers.

4.2.4 Alternative 4: Construction of Light Structure Enclosure with Continuous Radon Removal

This alternative consists of constructing a light, temporary air-tight enclosure around the K-65 silos to prevent the release of radon gas in the event of spontaneous silo dome failure and to eliminate the chronic radon emissions. The enclosure will contain the existing radon gas inventory should the domes collapse due to continued material degradation. A continuous radon treatment system will be employed to control the quantity of radon gas that could be released into the enclosure by removing radon from the silo head space inventory. The enclosure will also slow dome material degradation by minimizing further weathering of the silos.

A single enclosure will be constructed over both silos containing K-65 residues (see Figures 4-4 and 4-5). Small footings will be placed around the top of the earth berm to accommodate the structural framing. The main section of the structure will be composed of 13 112-ft span frames set 10 ft apart. The two end sections will be composed of 61-ft half-span frames radiating outward at equal angles. The entire structure will be covered with an airtight fabric and lifted into place by crane. The enclosure will be anchored to the footings, and the base of the enclosure will be sealed.

The existing radon treatment system will be renovated so that it will be capable of continuously recycling the silo atmospheres as well as that in the enclosure, thus maintaining their radon gas inventories at a low level. Additional radiation shielding will be added to the RTS to account for additional system loading. An airlock through the enclosure wall will be provided to permit access to the silos for sampling or inspection (not shown in figures). The enclosure will be designed to withstand a 100-mph wind and a 30-psf snow load.

The existing rainwater drainage system on the silo domes will be removed, and a new drainage system will be installed around the enclosure to minimize erosion of the berm.

4.2.5 Alternative 5: Covering the K-65 Residues

This alternative consists of covering the K-65 residues with a gas barrier material that will retard the emanation of radon gas into the space between the residues and the silo domes (IT 1988, Rogers et. al, 1983, Mihalovich 1983, NRC 1979). The material will be introduced into the silos through the man-way openings in the silo domes. The surface of the residues in Silo 2 is irregular due to the addition of low-level contaminated soils to the silo subsequent to the placement of the K-65 residues. These residues are assumed to act in conjunction with the cover layer. To minimize the possibility of displacing radon gas from the silos during filling activities, the existing radon treatment system will be employed to reduce the inventory of radon gas within the silos to the lowest practicable level prior to introducing the cover material. The radon treatment system will operate throughout the implementation activities to maintain a low radon inventory.

An ATE will be erected over both silo domes to contain the volume of the silo atmospheres displaced by the cover materials. The size of the earth berm will be increased to provide a level surface for the span of the enclosure (see Figure 4-6). The enclosure will be equipped with an airlock for the passage of personnel, equipment, and materials. The enclosure environment will be continually monitored during the implementation activities to verify that worker dose rates do not exceed an acceptable level. The radon treatment system will be modified to remove radon from the enclosure as well as from the silos.

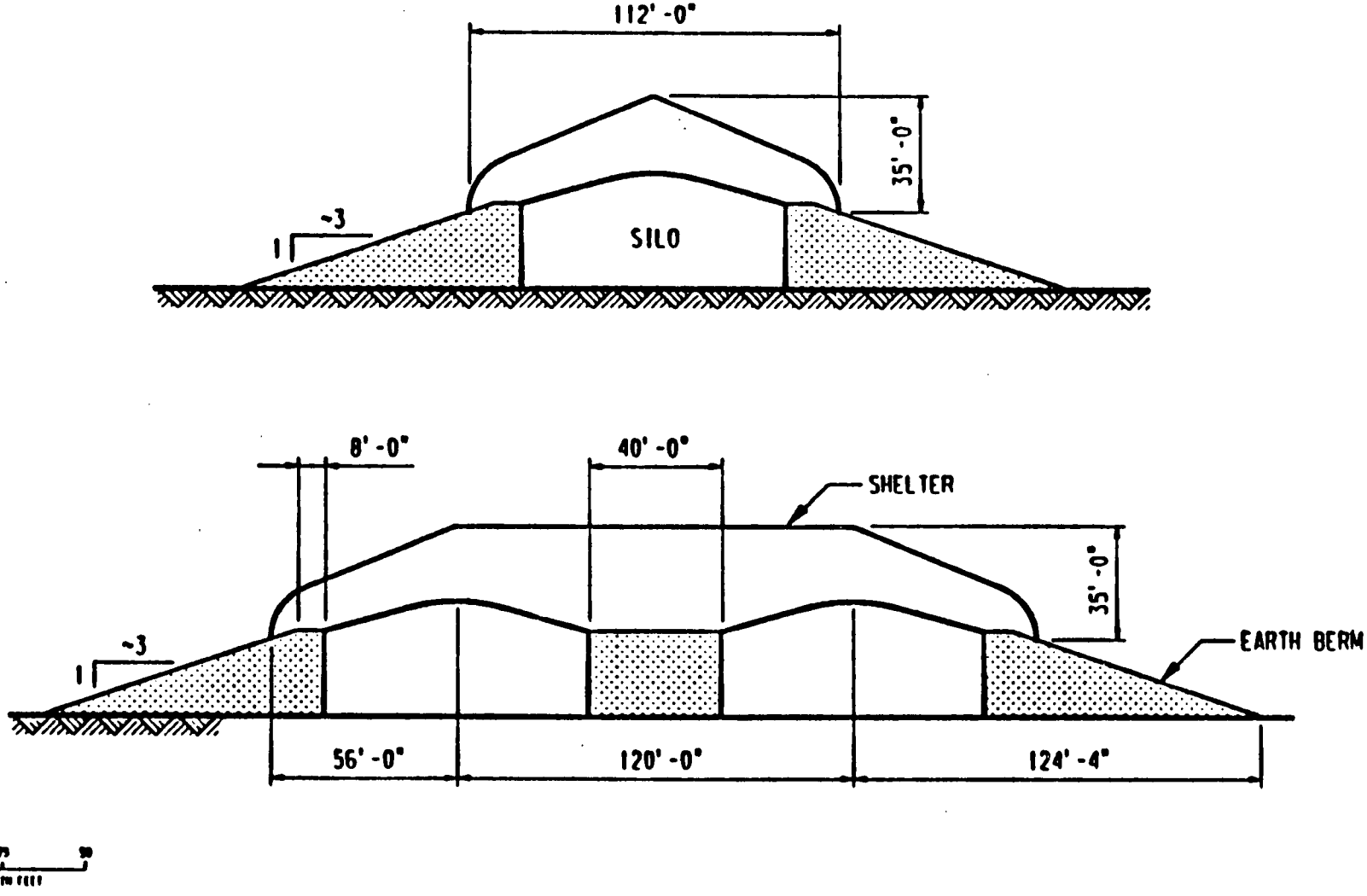

Figure 4-4
ELEVATION
LIGHT, TEMPORARY, NON-TORNADO-RESISTANT SHELTER STRUCTURE

1 27 2043.4

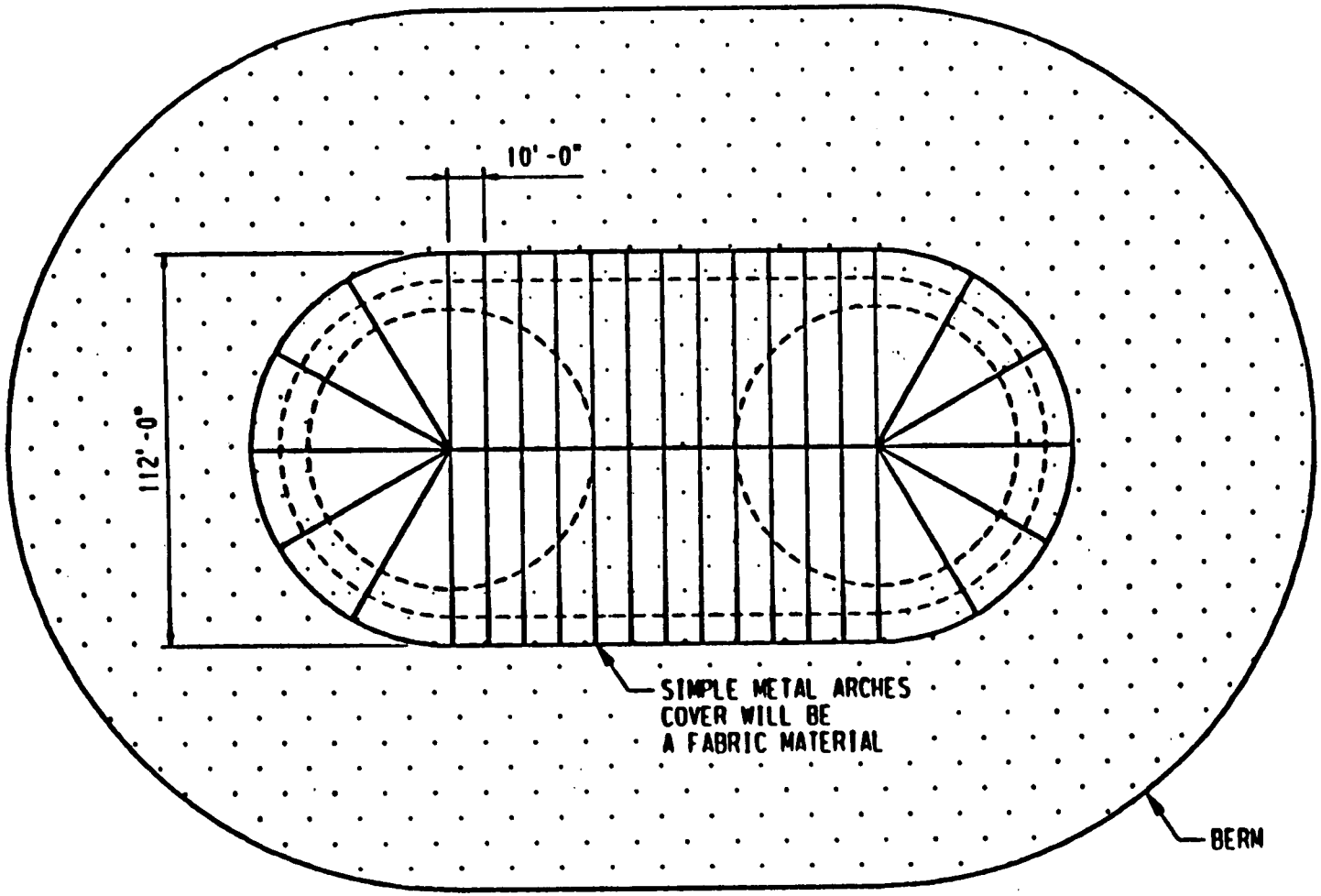

Figure 4-5
PLAN VIEW
LIGHT, TEMPORARY, NON-TORNADO-RESISTANT SHELTER STRUCTURE

1 27 2043.8

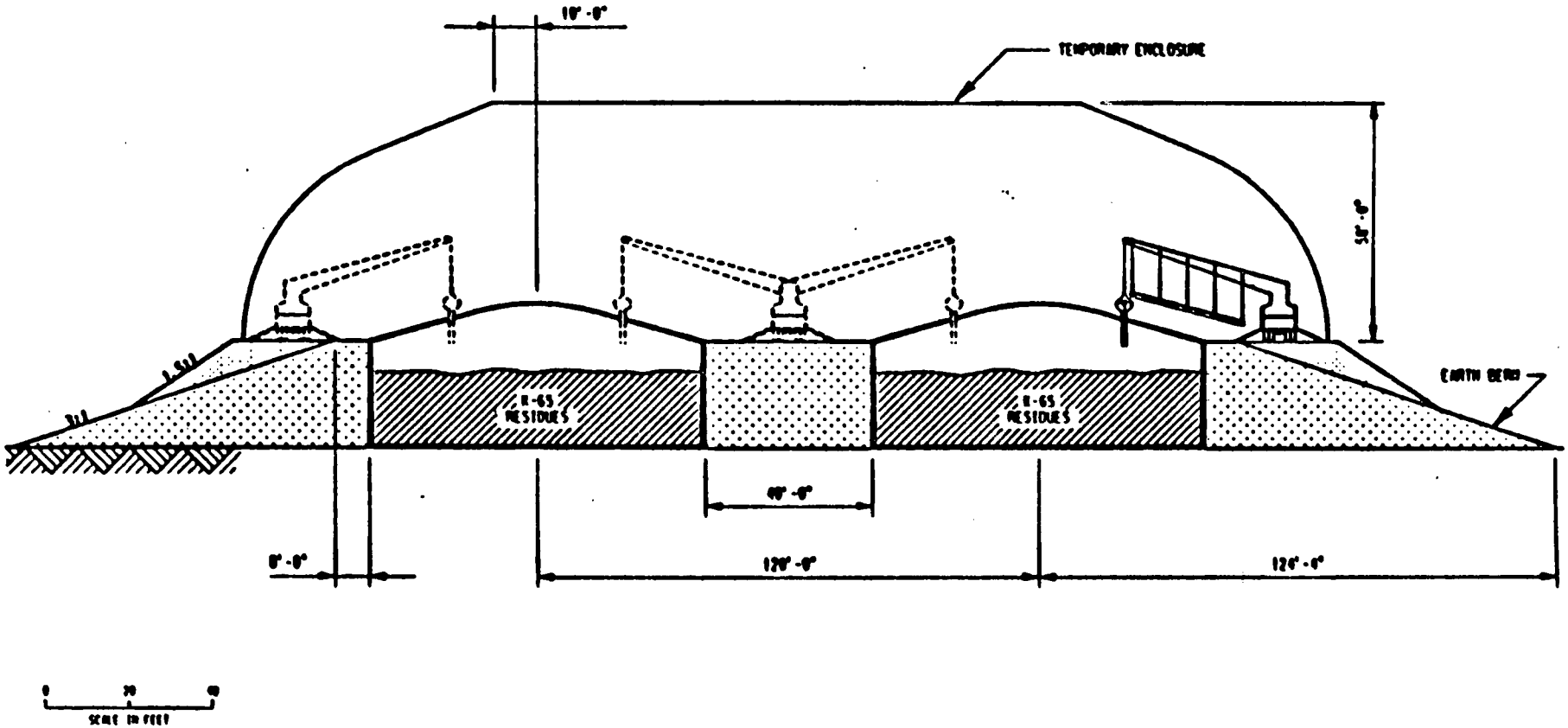

Figure 4-6
ELEVATION
TEMPORARY STRUCTURE FOR COVER LAYER ALTERNATIVE

1 27 2043.6

As much of the cover material as practicable will be stockpiled inside the enclosure before the silo dome man-ways are opened. The covering operations will be suspended each time the stockpile is depleted. More material will be brought into the enclosure once the radon gas in the enclosure environment has been reduced to acceptably low levels.

A small, mobile, expandable boom crane will be used inside the enclosure to lower the material conveying/distribution system through the man-way openings. All equipment will be positioned far enough away from the silos to prevent critical loads from reaching the silo walls.

Several cover materials were considered to determine which would maximize the effectiveness of this alternative. These materials were:

1. Sand: Once the level of radon gas within the silos is determined to be at a minimum inventory, the dome man-ways will be opened. A 4-ft-thick layer of masonry grade sand will be distributed with a relatively level surface over the K-65 residues using an impeller-type broadcast spreader. The spreader will be suspended from the crane and lowered into each of the man-way openings. Dry sand will be fed into the spreader to be distributed over the residues (see Figure 4-7). Dust control filters will be added to the radon treatment system to prevent the sand dust from clogging the system. After placement in the silos the sand will be wetted, to approximately 70 percent moisture saturation using fire hoses with fog nozzles inserted in the man-way.

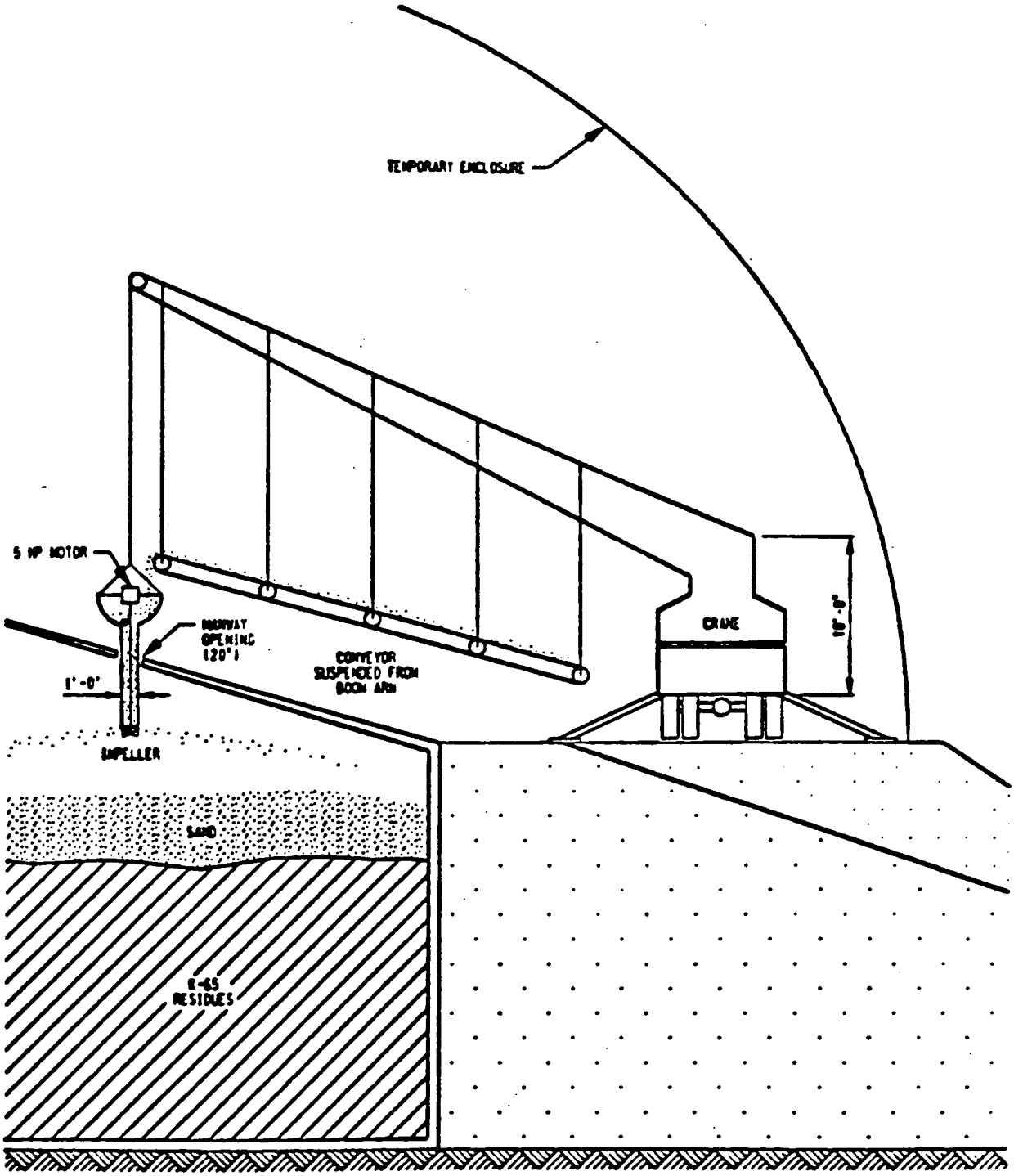

Figure 4.7
DETAIL
INTRODUCTION OF SAND LAYER

1 27 2043.7

After the covering is installed, the man-ways will be resealed. The enclosure structure will be removed after monitoring indicates that radon gas levels in the enclosure have been reduced to acceptable concentrations.

2. Concrete: A 3-ft thick layer of concrete will be used to cover the K-65 residues. The concrete mixture will be prepared with a superplasticizing agent to facilitate concrete flow. A shrinkage-control admixture will also be added to control concrete shrinking and cracking while the concrete cures. The concrete will be placed over the residues by pumping through the man-way openings and allowed to spread out over the surface of the residues.

   After initial curing of the concrete, a 2 in. (minimum) layer of bentonite slurry will be poured over the concrete to retain moisture and thus prevent shrinking and cracking of the concrete due to drying.

   After implementation activities are complete, the man-ways will be resealed. The enclosure structure will be removed after monitoring indicates that the amount of radon gas remaining in the enclosure has been reduced to acceptable levels.

3. Foam: A 3-ft-thick layer of expansive polyurethane foam will be used to cover the K-65 residues. The canisters containing the foam components will be pressurized. The dome man-ways will be opened after the radon gas inventory is determined to be at an acceptable level. The foam will be introduced into the silos in a froth form and will be allowed to cure in layers approximately 3 in. thick. Curing time will allow for expansion and will allow exothermic heat to dissipate to prevent heat build-up.

After foam installation activities are complete, the man-ways will be resealed. The enclosure structure will be removed after monitoring indicates that the amount of radon gas remaining in the enclosure has been reduced to an acceptable level.

4. Bentonite: A 4-ft-thick (the half value for moist clay is .12 meters (NUREG-0511) layer of bentonite slurry will be poured over the surface of the K-65 residues. When the level of radon gas within the silos is determined to be at the lowest practicable inventory, the man-ways will be opened. The dry bentonite will be mixed with water into a free flowing slurry and pumped into the silos through the man-ways. The slurry will be allowed to level over the residues (see Figure 4-8).

   Gages will be installed inside the silos to monitor the moisture level over the bentonite layer. Water will be added to the silos if the moisture drops to such a point that the bentonite might dry out and cause shrinking and cracking of the cover layer.

   After the cover is installed, the man-ways will be resealed. The enclosure structure will be removed after monitoring indicates that the amount of radon gas remaining in the enclosure has been reduced to acceptable levels.

5. Flyash: A 4-ft-thick layer of flyash will be placed over the surface of the K-65 residues. When the level of radon gas within the silos is determined to be at the lowest practicable inventory, the man-ways will be opened. The dry flyash will be mixed with water and a superplasticizer into a free flowing slurry and pumped into the silos through the man-ways. The slurry will be allowed to level over the residues. After implementation activities are complete, the

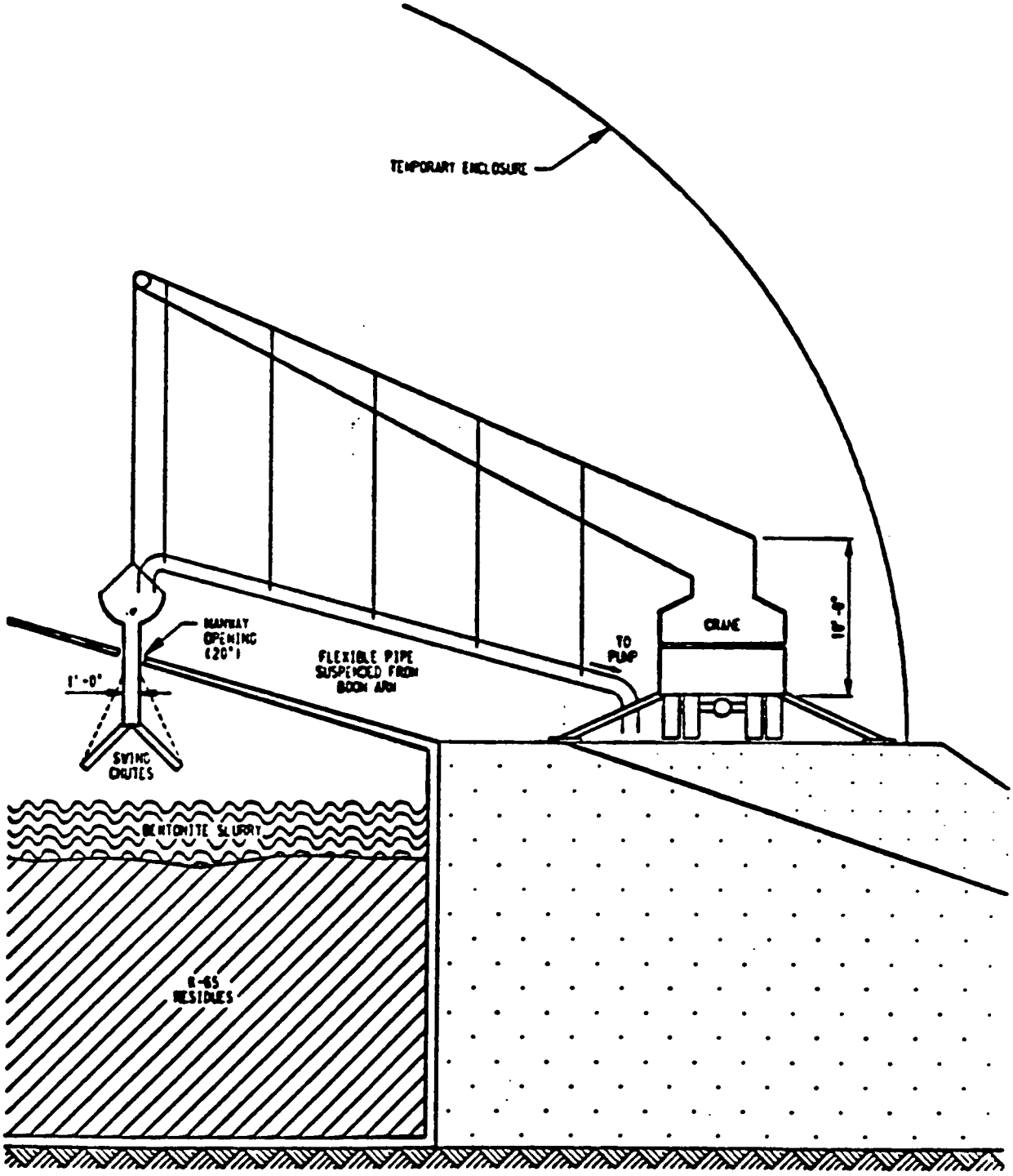

Figure 4.8
DETAIL
INTRODUCTION OF BENTONITE LAYER

1 27 2043.8

man-ways will be resealed. The enclosure structure will be removed after monitoring indicates that the radon gas remaining in the enclosure has been reduced to acceptable levels.

4.2.6 Alternative 6: Reduction of Radon Inventory

For this alternative, the silo's free space atmosphere is circulated through radon treatment equipment. The objective is to reduce the radon inventory in the silo atmosphere such that in the event of sudden dome failure, the level of radon dispersed into the atmosphere will remain within acceptable limits. The radon reducing equipment will be sized to ensure that chronic radon emissions are kept within allowable limits. The three methods of reducing the radon under consideration are (1) to circulate the silo atmosphere through carbon filters, (2) to circulate and hold the silo atmosphere in decay chambers, and (3) to recirculate the silo atmosphere. For each method, the option exists to discharge to the atmosphere or to recirculate to the silos. All three options effectively mitigate the consequences of immediate release of radon in the event of the silo dome failure and should reduce the chronic radon release rate as well.

These three options will ensure a reduced radon inventory that would preclude the inadvertent release of significant quantities of radon in the event of a sudden collapse of the silo dome. These options do <u>not</u> mitigate the release of the K-65 residues that would result from the failure of the dome during a tornado. Further, they would not address the continuing radon releases from the silo after dome failure.

1. Carbon Filters: For this option, the silo atmosphere is continuously removed and cycled through carbon filters similar to those currently in use. After the radon is removed, the treated air is discharged to the atmosphere.

The existing filter system uses a flow rate of 1,000 cfm. Once design radon levels have been reached, a reduced flow rate (between 100 to 400 cfm) would be used to maintain the reduced radon inventory. Redundant fan and filter units would be added to account for breakdown of equipment and maintenance. In addition, a concrete structure would be constructed over the filter units to handle the larger quantity of carbon filters required and to provide additional radiation shielding and the necessary protection against tornado pressures and tornado-generated missiles. Due to the level of radiation, remote handling of valves would be engineered into the system. This alternative will ensure a reduced radon inventory so that in the event of a sudden collapse of the silo dome, no significant quantity of radon would be released.

2. Decay Chambers: In this option, the silo atmosphere is similarly removed and stored in decay chambers. The decay chamber is a series of pressure vessels with a common manifold that will allow the radon-contaminated silo atmosphere to be held in suspension until the radon has decayed. As each chamber is filled, the manifold would shift to the next chamber. Size and number of chambers are designed to hold the radon for 20 to 30 days with sufficient additional chambers to allow portions of the system to be shut down for maintenance. The chambers would be enclosed in a reinforced concrete structure designed to provide radiation shielding and resist tornado pressures and tornado generated missiles, precluding the inadvertent release of radon or its daughter products. Due to the level of radiation, remote handling of valves would be engineered into the system. This alternative will ensure a reduced radon inventory so that in the event of a sudden collapse of the silo dome, no significant quantity of radon would be released.

3. Recirculation of Silo Atmosphere: This option is a combination of the two previous alternatives; the silo atmosphere is treated by either carbon filters or decay chambers. In lieu of discharging to the atmosphere, the silo atmosphere is then recirculated back to the silo. This option eliminates any potential discharge to the atmosphere.

4.2.7 Alternative 7: Administrative Controls

In this alternative, no abatement, remediation or treatment activities would be undertaken for the K-65 silos. Instead, an administrative program would be developed to provide necessary actions to be taken for each of the three considered failure modes. There are three possible failure scenarios.

For the case of a spontaneous failure of one of the domes, a single "puff" release of approximately 33 Ci (Note: Ijaz 1990 use 50 Ci for the acute release) of radon gas would be released followed by a continuing higher radon release of approximately 6 Ci/d. To provide for rapid detection of dome failure, a monitoring system would be mounted on the dome. The worst condition in which this failure would occur is a calm day with minimal dispersion taking place. The action to be taken is evacuation of the site area and the general public for a distance of approximately 500 m. To mitigate the resultant continuing release of radon, the administrative procedures will require the placement of 4 ft of sand over the exposed residues.

The second scenario is a dome failure resulting from a tornado. The major concern in this case is the dispersion of a portion of the K-65 residues, which is likely to occur. This scenario is less severe with respect to the original "puff" release of radon gas due to the dispersion that results from tornado winds. For this scenario, the action would call for an evacuation of the affected

areas and include a requirement to develop an appropriate plan for identification and cleanup of the affected areas.

The third scenario involves an increase in chronic radon emissions resulting from the deteriorated condition of the silo dome. For this case, the detection system previously described would identify the increased radon concentration and actions would be taken to control access to the area until remedial actions could be taken.

This alternative does not address the current chronic release of radon from the domes.

5.0 EVALUATION OF ALTERNATIVES

5.1 EVALUATION CRITERIA

The alternatives described in Section 4.0 were evaluated according to the following criteria:

- Effectiveness
- Implementability
- Cost

To achieve consistency with regulatory requirements and removal objectives summarized in Section 3.0, the effectiveness and implementability criteria are divided into several evaluation components. These criteria are similar to the evaluation criteria detailed in Chapter 6 of EPA/540/G-89/004 (OSWER Directive 9355.3-01), "Guidance for Conducting Remedial Investigations and Feasibility Studies under CERCLA." For the purposes of this report, these criteria are modified somewhat since the removal action is not intended to be the final and permanent remedial action.

5.1.1 Effectiveness

The effectiveness criterion has been divided into five components. These components are as follows:

- Protection of public health
- Protection of environment
- Reduction of toxicity/mobility/volume of contaminants
- Consistency with final remedial action
- Compliance with ARARs

Public Health and Environment

The components of effectiveness are evaluated by the alternatives' ability to ensure the protection of, and to minimize the impacts to public health and environment. The evaluation will address two aspects of public health: the general public and the workers involved in the removal action. In addition, the evaluation will address the protection provided during implementation of the removal action and for the time period until the final remedial action takes place, assumed to be 5 years. Also involved in this evaluation is the potential for failure of the alternative and any resultant public health threats. Any environmental impact resulting from the release of the residues will be evaluated.

As described in Section 2.3.3, under normal conditions radon is the major potential contaminant. The K-65 residues are a contaminant of concern because of a tornado's assumed ability to draw the residues and carry them elsewhere. Therefore, assessment of public health risks to off-site populations will focus on the radiation doses from both radon and the K-65 residues.

The exposure pathway associated with the radon emissions is airborne distribution. Three release scenarios are considered:

- continuous radon releases occurring as the gas diffuses through silo domes;
- puff release of dome contents (one silo only during very stable meteorological conditions) as a result of spontaneous dome failure followed by continuous radon release at a higher rate (dome no longer retards diffusion of gases); and
- puff release of dome contents (both domes) as a result of a tornado-induced failure followed by a continuous radon release at a higher rate (domes no longer retard diffusion of gases).

Reduction in Toxicity/Mobility/Volume

This criteria normally focuses on the treatment of the contaminant of concern. In this evaluation, this criteria focused on the alternative's ability to either reduce the mobility of the radon gas and residues by providing leak tight barriers or reduce the volume of radon gas and K-65 residues available for release.

Consistency with Final Action

NCP requires that a removal action be consistent with the anticipated final action for the operable unit. RI/FS (Draft), FMPC Task 12 Report, Initial Screening of Alternatives for Operable Unit 4 provided the anticipated remedial actions (DOE 1990a). In addition, the removal action should not unduly delay the final action.

Compliance with ARARs

Table 5-1 summarizes the performance of each alternative with regard to the ARARs. Radioactive releases and resultant doses are those presented in the Baseline Risk Assessment (Ijaz 1990) performed by the University of Cincinnati. Since no reliable data exists for the radon flux currently emitting from the silo domes, the NESHAP standard 20 pCi/m^2-sec was extrapolated to a curies/year dimension using the following:

Flux * Dome area * Time = Ci/time

20 pCi/m^2-sec * 934 m^2 * 3.1536 E7 sec/y * 1 Ci/10 E12 pCi =

.589 Ci/y

n8

Table 5-1 Performance of Alternatives vs ARAR's

ALTERNATIVE	ITEM DESCRIPTION	UNITS	ARARs	CHRONIC	DOME FAILURE (1) SINGLE (4) SPONTANEOUS	DOME FAILURE (1) BOTH TORNADO	MEETS ARARs ?
No Action	Rn FLUX	pCi/m2-sec	2.0 E1	2.2 E4	8.0 E4	14.0 E4	NO
	Curies Released Radon	Ci/y	0.589 E0 (6)	6.5 E2	5.0 E1	5.0 E1	NO
	Curies Released Radium	Ci/y	(2)	0	0	2.81 E2	NO
	Curies Released Thorium	Ci/y	(2)	0	0	1.54 E2	NO
	Curies Released Uranium	Ci/y	(2)	0	0	0.6 E0	NO
	Dose Worker @100 m (1)	mrem/y	5.0 E3	2.57 E3	2.8 E3	31.0 E3	NO
	Dose resident @500 m	mrem/y	0.010 E3	0.21 E3	0.13 E3	1.5 E3	NO
	Dose Population @1500 m	mrem/y	0.010 E3	0.0012 E3	0.00023 E3	0.0013 E3	YES
Tornado Resistant Enclosure	Rn FLUX	pCi/m2-sec	2.0 E1	2.0 E1	0	0	YES
	Curies Released Radon	Ci/y	0.589 E0 (6)	0.589 E0 (6)	0	0	YES
	Curies Released Radium	Ci/y	(2)	0	0	0	YES
	Curies Released Thorium	Ci/y	(2)	0	0	0	YES
	Curies Released Uranium	Ci/y	(2)	0	0	0	YES
	Dose Worker @100 m (1)	mrem/y	5.0 E3	(3)	0	0	YES
	Dose resident @500 m	mrem/y	0.010 E3	(3)	0	0	YES
	Dose Population @1500 m	mrem/y	0.010 E3	(3)	0	0	YES
Relocate Residues	Rn FLUX	pCi/m2-sec	2.0 E1	0	0	0	YES
	Curies Released Radon	Ci/y	0.589 E0 (6)	0	0	0	YES
	Curies Released Radium	Ci/y	(2)	0	0	0	YES
	Curies Released Thorium	Ci/y	(2)	0	0	0	YES
	Curies Released Uranium	Ci/y	(2)	0	0	0	YES
	Dose Worker @100 m (1)	mrem/y	5.0 E3	0	0	0	YES
	Dose resident @500 m	mrem/y	0.010 E3	0	0	0	YES
	Dose Population @1500 m	mrem/y	0.010 E3	0	0	0	YES
Light Enclosure	Rn FLUX	pCi/m2-sec	2.0 E1	2.0 E1	0	14.0 E4	NO
	Curies Released Radon	Ci/y	0.589 E0 (6)	0.589 E0 (6)	0	5.0 E1	NO
	Curies Released Radium	Ci/y	(2)	0	0	2.81 E2	NO
	Curies Released Thorium	Ci/y	(2)	0	0	1.54 E2	NO
	Curies Released Uranium	Ci/y	(2)	0	0	0.6 E0	NO
	Dose Worker @100 m (1)	mrem/y	5.0 E3	(3)	0	31.0 E3	NO
	Dose resident @500 m	mrem/y	0.010 E3	(3)	0	1.5 E3	NO
	Dose Population @1500 m	mrem/y	0.010 E3	(3)	0	0.0013 E3	YES
Covering Residues	Rn FLUX	pCi/m2-sec	2.0 E1	2.0 E1	0	0	YES
	Curies Released Radon	Ci/y	0.589 E0 (6)	0.589 E0 (6)	0	0	YES
	Curies Released Radium	Ci/y	(2)	0	0	0	YES
	Curies Released Thorium	Ci/y	(2)	0	0	0	YES
	Curies Released Uranium	Ci/y	(2)	0	0	0	YES
	Dose Worker @100 m (1)	mrem/y	5.0 E3	(3)	0	0	YES
	Dose resident @500 m	mrem/y	0.010 E3	(3)	0	0	YES
	Dose Population @1500 m	mrem/y	0.010 E3	(3)	0	0	YES
Reduce (5) Radon Inventory	Rn FLUX	pCi/m2-sec	2.0 E1	2.0 E1	8.0 E4	14.0 E4	NO
	Curies Released Radon	Ci/y	0.589 E0 (6)	0.589 E0	5.0 E1	5.0 E1	NO
	Curies Released Radium	Ci/y	(2)	0	0	2.81 E2	NO
	Curies Released Thorium	Ci/y	(2)	0	0	1.54 E2	NO
	Curies Released Uranium	Ci/y	(2)	0	0	0.6 E0	NO
	Dose Worker @100 m (1)	mrem/y	5.0 E3	(3)	2.8 E3	31.0 E3	NO
	Dose resident @500 m	mrem/y	0.010 E3	(3)	0.13 E3	1.5 E3	NO
	Dose Population @1500 m	mrem/y	0.010 E3	(3)	0.00023 E3	0.0013 E3	YES
Admin Controls	Rn FLUX	pCi/m2-sec	2.0 E1	2.2 E4	8.0 E4	14.0 E4	NO
	Curies Released Radon	Ci/y	0.589 E0 (6)	6.5 E2	5.0 E1	5.0 E1	NO
	Curies Released Radium	Ci/y	(2)	0	0	2.81 E2	NO
	Curies Released Thorium	Ci/y	(2)	0	0	1.54 E2	NO
	Curies Released Uranium	Ci/y	(2)	0	0	0.6 E0	NO
	Dose Worker @100 m (1)	mrem/y	5.0 E3	2.57 E3	2.8 E3	31.0 E3	NO
	Dose resident @500 m	mrem/y	0.010 E3	0.21 E3	0.13 E3	1.5 E3	NO
	Dose Population @1500 m	mrem/y	0.010 E3	0.0012 E3	0.00023 E3	0.0013 E3	YES

NOTES:

(1) Radioactive releases and doses are extracted from Baseline Risk Assesment (Ijaz 1990)
(2) The following are ARARs by concentration:

Radon	3.0 E-09 uCi/ml	Uranium	1.0 E-13 uCi/ml
Radium	1.0 E-12 uCi/ml	Thorium	4.0 E-14 uCi/ml

(3) Chronic radon doses were not calculated since the source terms meet ARARs
(4) Uses data from Silo 1 which has the highest calculated radon generation rate
(5) Assumes a radon treatment system that reduces the in-silo inventory such that the leakage meets NESHAP
(6) Extrapolated from NESHAP Standard: 20 pCi/m2-sec * 934 m2 * 3.1536 E7 sec/y * 1 Ci/10 E12 pCi = .589 Ci/y

It should be noted that the Baseline Risk Assessment (Ijaz 1990) uses 50 Ci of Radon for both the spontaneous (one dome fails) and the tornado (both domes fail) induced dome failure. While this may cause some inconsistencies with the descriptions in the EE/CA, the results are not effected since radon is not a significant dose contributor in the tornado scenario.

5.1.2 Implementability

This criterion was evaluated based on the following components:

- Ability to construct and/or operate alternative
- Reliability
- Ability to monitor effectiveness/status of alternative
- Interagency coordination
- Availability of material and craftsmen
- Length of construction schedule

5.1.3 Costs

Only capital costs were considered. The operating and maintenance costs for each of the alternatives was considered equivalent, and therefore would not be a determining factor in the selection process.

5.2 ALTERNATIVE 1: NO ACTION

5.2.1 Effectiveness

Public Health

Under Alternative 1, it is assumed that the wastes will remain "as-is" without implementation of any technology that removes, treats, contains, or otherwise mitigates the wastes. The overall

level of protection afforded by this alternative is minimal assuming failure of the silos does not occur.

Chronic exposure to the radon releases currently being experienced by the workers and general public exceed ARARs and will in all likelihood increase as the silo domes continue to degenerate.

Given a spontaneous failure of one of the silo domes, approximately 33 Ci of ^{222}Rn will be released. A conservative estimate of the dose (based on 50 Ci) for the nearest resident by this event is 130 mrem (Ijaz 1990). Given such a failure, the chronic release of the radon gas will increase significantly and will probably continue for several days, at best, before a layer of sand or other cover could be added.

Environment

For Alternative 1, the wastes remain as-is in the silos. Currently, the only impact is the minute buildup of the daughter products on the surrounding fauna and flora.

Under a tornado-induced failure, approximately 1 m of the residues are projected to be drawn into the storm and distributed on the surrounding soil (Ijaz 1990). This would result in large-scale environmental contamination that would necessitate cleanup and subsequent waste disposal.

Reduction in Toxicity/Mobility/Volume

Alternative 1 would provide no reduction in toxicity/mobility/volume. It should be noted that there is no known treatment that would reduce the radioactivity (toxicity) of radon or radium.

Consistency with Final Action

Alternative 1 is obviously consistent with the final action in that "no action" does not preclude any other alternative.

5.2.2 Implementability

Technical Feasibility

The evaluation of technical feasibility is not necessary for the no action alternative. No construction or monitoring activities other than those already being practiced will be implemented.

Administrative Feasibility

Administrative and public acceptance of the no-action alternative is highly unlikely. Taking no action will not mitigate the current hazards to the public health posed by the chronic radon emissions.

Timeliness

There is no time required to implement Alternative 1.

5.2.3 Cost

Alternative 1 requires no expenditure in capital funds. Environmental monitoring requirements will remain constant.

5.3 ALTERNATIVE 2: CONSTRUCTION OF TORNADO-RESISTANT ENCLOSURES

5.3.1 Effectiveness

Public Health

Due to the risk of damage to the silo domes during enclosure construction activities and to the necessary proximity of the workers to the silos, the silo enclosure decreases the short-term protection of public health. However, worker dose rates are minimal because there is no direct contact between the workers and the silo contents. Long-term protection of the public health is increased because of the protection of the domes from tornado loads and the containment of radon gas and K-65 residues should the domes collapse due to other causes. Current chronic releases of radon gas from the silos are also contained within the enclosure, which enhances protection of the general public from existing conditions.

Environment

The protection of the environment involves the same factors as the protection of the public health. Any noise or air quality impacts associated with this option will be minimal and limited to on-site populations. There would be no change in land use practices or waste management requirements before final remedial action occurs.

Reduction of Toxicity/Mobility/Volume

This alternative will not affect the toxicity or the volume of the silo contents. However, it will eliminate the mobility of the radon gas and K-65 residues (by tornado uptake) upon completion of the enclosures. The result is a reduction of the potential long-term risk of exposure. The short-term risk of exposure is increased due to the possibility of dome collapse, caused by an industrial accident, during construction of the enclosures.

The long-term effectiveness of the enclosures would not be affected by a delay of the final removal action. However, the effectiveness of Alternative 2 ceases upon implementation of a final action requiring the removal of the enclosures.

Consistency with Final Action

Implementation of Alternative 2 would hinder final action to the extent that the enclosure structures will have to be removed to allow access to the silos and their contents. The structures will not be considered as contaminated waste, and the materials may be reused. This alternative will not change the physical properties of the silo contents.

5.3.2 Implementability

Technical Feasibility

Construction of the tornado-resistant enclosures will utilize only widely practiced and proven technologies. All materials, including structural steel and concrete, are readily available. Extensive planning is required to minimize the risk of damage to the silo domes while the enclosures are being constructed. Construction of the enclosures will require skilled craftsmen and equipment operators, which are available locally.

Monitoring of the enclosure environment should be performed periodically to determine the concentration of radon gas. This will performed by on-site personnel.

Administrative Feasibility

No permits are required for the enclosure construction because it is an on-site operation. Public acceptance of Alternative 2 is

questionable due to the risk of radon release during construction. However, if this risk can be mitigated through the planning process, the enclosure alternative should be publicly acceptable.

Timeliness

Preparation of this EE/CA could constitute the initial portion of the design phase, so the time required for the initiation of construction is minimal and mostly dependent on administrative details. Although construction time for the structure is not expected to exceed 3 months (barring adverse weather conditions), the implementation of this alternative, including design, procurement, and construction, is expected to take 10 months.

5.3.3 Cost

The total capital cost for Alternative 2 is expected to be $5 million. This cost reflects direct capital costs for equipment, labor, and materials necessary to construct the enclosures. Indirect capital costs for engineering, subcontracting, and contingencies are also included.

5.4 ALTERNATIVE 3: RELOCATION OF RESIDUES

5.4.1 Effectiveness

Public Health

This alternative will significantly decrease the short-term protection of public health because the residues would be handled during removal to the ISF. Further, additional exposure exists from rehandling, which will be required during final disposal. An ATE will be used during removal to provide short-term protection of the public health from the release of radon. The long-term

protection to the public would be increased by an ISF designed and constructed to resist tornado loads.

There a potential for failure of the ATE to contain the radon gas inventory due leakage caused by material defect or accidental breaching of the barrier fabric. To minimize the effects of such failures the RTS will be utilized to maintain the concentration of radon gas to as low as practicable. The ATE internal atmosphere will be routinely monitored for radon concentration and external monitoring will be performed to detect leakage from the facility.

Environment

The protection of the environment involves the same factors as the protection of the public health. Additionally, any noise or air quality impacts associated with this option will be minimal and limited to on-site populations.

Reduction of Toxicity/Mobility/Volume

This alternative will not affect the toxicity or the volume of the silo contents. It will add to the total volume of wastes since the **SECURE** containers must be included in the final remedial action. The ISF would eliminate the mobility of the radon gas and K-65 residues since the structure will be designed to withstand tornado loadings. This results in a significant reduction of the long-term risk of exposure.

Removal of the residues and storage in an interim facility provides a high degree of protection from the concern of a dome failure of Silos 1 and 2. Since the residues would be in a tornado-resistant facility, a tornado would not present a potential for additional radon release. This lowers the long-term risk of exposure.

Consistency with Final Action

Creation of an ISF and use of **SECURE** containers would not eliminate any of the alternatives under consideration for final disposal of the residues. However, there are inconsistencies with most of the alternatives. In most cases, double handling of the residues may be required. For those alternatives based on in situ storage, reconstruction of the silo dome may be required. For those alternatives based on stabilization or vitrification, removal of the material from the interim containers may be required. Although no additional volume of residues would be created, there would be an additional volume of total waste, since the **SECURE** containers would be included in the final remediation.

5.4.2 Implementability

Technical Feasibility

This alternative requires the design, siting and construction of the ISF before removal of the residues can occur. The ISF is a steel reenforced concrete structure which is tornado resistant and weather tight. The ISF will be constructed at grade elevation and will have a leakage collection system. Primary containment of the residues and the radon gas will be provided by the SECURE containers.
Construction of both the ATE and ISF will utilize current technology. Removal and transporting of the residues will require resolution of some technical concerns and development of special handling procedures.

Hydraulic systems have been used in previous DOE K-65 removal operations. However, in those instances, the slurried residues were pumped directly into the permanent disposal facilities, which were designed to dewater the residues for long-term storage. At FMPC, the residues would be slurried into an enclosed container,

and dewatering of the residues would present significant unresolved technical questions. If the slurried residue is pumped to an intermediate dewatering facility, dried residue would have to be mechanically handled to be placed into the interim containers, which also presents significant unresolved technical questions.

Mechanical systems would utilize standard construction equipment that would avoid the technical concerns associated with dewatering. However, the mechanical equipment would require modification to allow remote operation. This would require innovative concepts and controls to ensure uninterrupted operations. In addition, mechanical removal requires separate loading and transporting of the **SECURE** containers. This operation would require opening and closing of the temporary enclosure structure, increasing the potential for the release of radon, approximately 1,100 times.

Administrative Feasibility

No permits are required for construction of the ISF. Public acceptance of this alternative is questionable since the material is handled twice and is not fully remediated. However, these concerns should be mitigated through the planning process since the interim storage structure provides a substantial structural improvement over the existing silos.

Timeliness

Based on preliminary evaluation, efforts for removal of the material in the K-65 silos are expected to require 15 months for engineering and review; 8 months for construction of the ATE and ISF, and 9 months for the material removal, transport, and demobilization of the site. Total estimated duration is 32 months.

5.4.3 Cost

Total capital cost for this alternative based on preliminary evaluations, is expected to be $60 million. This cost includes direct capital costs for equipment, material, and labor for construction of the ISF and the ATE. Indirect capital costs for engineering, subcontracting, and contingencies are also included.

5.5 ALTERNATIVE 4: CONSTRUCTION OF LIGHT STRUCTURE ENCLOSURE WITH CONTINUOUS RADON REMOVAL

5.5.1 Effectiveness

Public Health

This alternative does not significantly affect the short-term protection of the public health because the enclosure has no radon-control effect until completion of construction. Workers are required to be near the silos, but dose rates, barring unexpected dome collapse, are minimal because there is no direct contact between the workers and the silo contents. Long-term protection of the public health is increased because the enclosure provides a barrier to radon release in the event of dome collapse and also prevents the dispersion of current chronic radon emissions from the silos.

There a potential for failure of the ATE to contain the radon gas inventory due leakage caused by material defect or accidental breaching of the barrier fabric. To minimize the effects of such failures the RTS will be utilized to maintain the concentration of radon gas to as low as practicable. The ATE internal atmosphere will be routinely monitored for radon concentration and external monitoring will be performed to detect leakage from the facility.

Environment

The protection of the environment involves many of the same factors as the protection of the public health. Any noise or air quality impacts associated with this option will be minimal and limited to on-site populations. There will be no change in land use practices or waste management requirements before final remedial action occurs.

Reduction of Toxicity/Mobility/Volume

This alternative will affect the volume of the silo contents by reducing the inventory of radon gas available for release. The volume of the K-65 residues will not be affected, but the mobility of the residues will be reduced by the enclosure. The result is a reduction of the long-term risk of exposure.

This alternative ceases to be effective in the event of a tornado. The enclosure will not be designed to resist tornado loads and is likely to be damaged or destroyed along with the silo domes, which have insufficient strength to resist tornado loads. The radon removal system will reduce the volume of radon gas, which could be released by a tornado-induced dome failure. However, since it does not mitigate the release of the K-65 residues caused by a tornado, a contingency plan must be available to reestablish the containment of radon gas and K-65 residues after a tornado-induced enclosure destruction/dome collapse and to recover the dispersed residues.

This option prevents water from reaching and penetrating the silo domes, reducing weathering of the domes, thereby extending effective lifetimes of the silo domes.

Consistency with Final Action

Final action will not be significantly hindered by the implementation of this alternative. The enclosure may be removed to facilitate final action, but the structure may be quickly and easily removed, dismantled, and decontaminated as required, and can be reused. This alternative will not change the physical properties of the K-65 residues.

5.5.2 Implementability

Technical Feasibility

Construction of the enclosure and radon removal system will utilize only widely practiced and proven technologies. All materials are readily available from vendor's stock. Laborers, carpenters, and ironworkers are necessary to construct the enclosure, a crane and operator are required to place it, and mechanical contractors are needed to renovate the radon removal system. All workers and equipment are available locally. Extensive planning is required to minimize the risk of damage to the silo domes during the installation of the enclosure.

Administrative Feasibility

No permits are required for implementation because it is an on-site operation. The risk of radon gas release during construction is low, and the long-term effectiveness of the enclosure and radon removal system is judged to be good. Public acceptance of this option is expected to be minimal even though there is a tornado contingency plan available.

Timeliness

The enclosure is pre-designed from vendor's stock and is deliverable within days. The time required for construction is minimal and is mostly dependent on administrative delays. Construction time is not expected to exceed 6 weeks, barring adverse weather conditions. The implementation of this alternative including design, procurement and construction is expected to take 10 months.

5.5.3 Cost

The total capital cost for this alternative is expected to be $600,000. This cost reflects direct capital costs for equipment, labor, and materials necessary to construct the enclosures and renovate the radon removal system. Indirect capitol costs for engineering, subcontracting, and contingencies are also included.

5.6 ALTERNATIVE 5: COVERING THE K-65 RESIDUES

5.6.1 Effectiveness

Public Health

The short-term effectiveness of each of the cover materials is good because the radon-attenuating effect of the cover begins as soon as the surface of the residues is covered. Worker dose rates are low since there is no direct contact between the workers and the K-65 residues. Each of the alternatives positively reduces the chronic emission of radon. Each of the materials is further evaluated below:

1. **Sand:** Water saturated sand is very effective in increasing the protection of the public health. Long-term protection is excellent since the saturated sand cover allows the radon

gas to diffuse into it, but detains the gas for a long enough period of time to allow the radon to decay into its daughter products, thereby eliminating all measurable radon emissions. Also, the sand layer is not susceptible to shrinking and cracking, thereby providing an effective long-term barrier. The sand would also attenuate the gamma flux associated with the K-65 residues.

2. **Concrete:** The long-term effectiveness of the concrete layer is dependent on the amount of shrinkage and cracking the concrete experiences. If the concrete shrinks away from the walls of the silos, or develops cracks through the layer, radon gas will have a pathway to the cover surface. Should the seal be maintained by mitigating shrinking and cracking with a moisture-retaining layer of bentonite slurry, the effectiveness will be increased.

3. **Foam:** The increase in the short-term protection of public health is questionable for foam. Radon attenuation begins as soon as the residue surface is covered, but, due to the high exothermic heat generated by the foam as it cures, any water or moisture inside the silos may flash into a steam and produce a higher risk to workers within the enclosure. It is also possible that any steam generated could burst through the foam layer as it cures. Long-term protection is good because there is no pathway for radon gas emission into the space above the foam layer.

4. **Bentonite:** The bentonite is very effective in increasing the protection of the public health. Long-term protection is good because the bentonite forms an effective cap over the residues and the pathway for radon emissions into the space above the cover layer is eliminated. Bentonite is self-healing and is not susceptible to cracking if kept moist and in a plastic condition.

5. **Flyash:** The effectiveness of flyash is poor in the long-term protection of public health. As the flyash slurry dries it is likely to shrink and crack and expose numerous pathways for the emanation of radon gas into the space above the cover layer. Therefore it will not be considered further.

There a potential for failure of the ATE to contain the radon gas inventory due leakage caused by material defect or accidental breaching of the barrier fabric. To minimize the effects of such failures the RTS will be utilized to maintain the concentration of radon gas to as low as practicable. The ATE internal atmosphere will be routinely monitored for radon concentration and external monitoring will be performed to detect leakage from the facility.

Environment

The protection of the environment involves the same factors as the protection of public health. Any noise or air quality impacts associated with this option would be minimal and limited to on-site populations. There will be no changes in land use practices or waste management requirements before final remedial action occurs.

Reduction of Toxicity/Mobility/Volume

This alternative will reduce the inventory of radon gas available for release. The mobility of the radon gas and the K-65 residues is greatly reduced by the cover material. The volume of contaminated wastes in the silos will be increased because the cover material will become contaminated and will have to be disposed of with the residues.

It has been established that the silo domes will probably fail under a tornado load and would collapse during such an event. Each material would be effected differently in this situation:

1. **Sand:** Sand will absorb the impact of the collapsing domes with minimal impact on its radon attenuating capacity. A small amount of sand might be removed from the silo by the turbulence of the high-speed winds associated with a tornado. Any sand lost to a tornado can be quickly replaced to assure its radon attenuation capacity.

2. **Concrete:** Concrete may crack under the impact of the collapsing domes. Cracks in the concrete will provide a migration path for the radon gas. Steps will have to be taken to confirm and, if necessary, reestablish the integrity of the concrete barrier.

3. **Foam:** The solidified foam barrier may crack under the impact of the collapsing domes and the effect of the tornado winds is unknown. It assumed the a low density material such as the foam may be subsequently mobilized by the tornado force winds. Steps will have to be taken to confirm and, if necessary, reestablish the integrity of the foam barrier.

4. **Bentonite:** Falling rubble from the dome will penetrate the surface of the bentonite layer, but due to the self-healing nature of the bentonite, it will flow around the rubble and reestablish the gas barrier. Some amount of the bentonite layer may be removed from the silo by the turbulence of the high-speed winds associated with a tornado. Steps will have to be taken after a dome failure to ensure that the bentonite layer is replenished and kept moist.

The amount of material that would be removed from the silos by a tornado is not expected to exceed three feet in depth. With all materials, the amount remaining will be of such thickness that the residues are not expected to be uncovered. Steps will have to be

taken after a tornado to replenish the cover material to restore its design thickness.

Consistency with Final Action

The physical properties of the K-65 residues will not be altered by the cover material.

Final action will be somewhat hindered by this alternative because of the additional volume of contaminated materials to be dealt with. Other factors will have to be considered for certain materials:

1. **Concrete:** The concrete layers will have to be broken before they can be removed from the silos, requiring a significant amount of extra effort.

2. **Foam:** The removal of the foam layers will require cutting before they can be extracted from the silos.

Due to the adverse affect these two materials would have on a final removal action, concrete and foam will not be considered further.

5.6.2 Implementability

Technical Feasibility

Implementation of this alternative will utilize widely used and proven technologies. All materials are readily available. A carefully planned implementation program is required to minimize the risk of damage to the silo domes.

The difficulties involved in this option concern the ability to achieve a relatively level surface of the cover material. Video

monitors will be employed within the silos to monitor the success of the implementation activities.

For the sand to be an effective barrier to radon gas migration it must be saturated with water (Nielson 1988). Therefore after the sand is placed in the silos, water must be added to bring the sand to 70 percent saturation. The water fills the voids in the sand and therefore influences the performance of the sand as a radon gas barrier. Both evaporation and gravity work to remove the water content from the sand and it would be necessary to provide a means to monitor the water content of the sand or a radon monitoring system to measure the performance of the barrier. Upon determining the need for additional water, it would be difficult to determine the right amount to add.

Application of bentonite requires the use of water. The water content allows the bentonite to flow freely during placement. Unlike sand, the water which is molecularly bound to the bentonite in the mixture will not migrate. The bentonite will seal all surfaces it comes in contact with. The bentonite in the slurry will eventually settle leaving a layer of water that will insure the bentonite remains wetted. A simple visual check can be made to insure the bentonite remains wetted and if required it is easier to determine that enough water has been added to the bentonite.

Implementation of this alternative will require skilled craftsmen, equipment operators and unskilled laborers. These workers are available locally.

Continued monitoring of the silo environments will need to be performed periodically to determine the condition of the cover material and/or the concentration of radon gas. This will be performed by on-site personnel.

Administrative Feasibility

No permits are required for the introduction of a cover material into the silos because it is an on-site operation. Public acceptance of this option is likely to be favorable due to the elimination of chronic radon emissions and the mitigation of the risks involved in event of a tornado.

Timeliness

The initial design of the material distribution systems has begun and fabrication time will be minimal. The time required for the initiation of implementation activities is mostly dependent on administrative delays. Implementation time is not expected to exceed ten months including design, procurement and construction.

5.6.3 Cost

The total cost for each material reflects the direct capital costs for equipment, labor, and materials. Indirect capital cost for engineering, subcontracting, and contingencies are also included.

1. **Sand:** The total cost for using sand as a cover material is expected to be $2.1 million.

2. **Bentonite:** The total cost for using bentonite as a cover material is expected to be $2.9 million.

5.7 ALTERNATIVE 6: REDUCTION OF RADON INVENTORY

This alternative will not significantly improve the short-term or long-term protection of the public health in the event of a dome failure. Although the radon inventory is effectively reduced, no mitigating action is taken for the K-65 residues. The residues are still subject to dispersal during a tornado event. Therefore, this

alternative does not meet the basic objectives of this removal action and will not be considered further.

5.8 ALTERNATIVE 7: ADMINISTRATIVE CONTROLS

This alternative does not provide any significant improvement to the short term or long protection of the public health. Administrative controls would be acceptable back-up to a system that was operational and had a small probability of failure. However, in this case the structural stability of the silos is highly questionable, and the likelihood of the use of such a back-up system (administrative control) is relatively high. The residues are still subject to dispersal during a tornado event. In addition, the exposure pathway for radon assumed a one hour inhalation period (an evacuation could not be implemented in that time frame) and resulted in a 130 mrem exposure to the general public (Ijaz 1990). Under these conditions, the risk to the public health is too high, therefore, Alternative 7 is not a viable alternative and will not be considered further in this evaluation.

6.0 SELECTION OF THE PREFERRED ALTERNATIVE

6.1 ELIMINATION OF NONRESPONSIVE ALTERNATIVES

The seven alternatives described in Section 4.0 were first evaluated to determine if they fulfilled the basic and secondary objectives of the removal action. The objectives of the removal action are:

- to reduce routine emissions of radon from the K-65 silos
- to decrease, mitigate, or otherwise control the radon gas inventory in the K-65 silos head space so that a failure of the dome(s) will not result in a release of significant quantities of radon gas, which would pose a potential threat to the public;
- to decrease, mitigate, or otherwise control the threat of K-65 residues released in significant quantities as a result of dome failure caused by a tornado.

Table 6-1 presents the results of the evaluation of the alternatives solely on their ability to meet the objectives of the removal action.

Failure of an alternative to meet both of these objectives precluded that alternative from further consideration. Three alternatives fulfilled both objectives of the removal action and were further evaluated. Note that Alternative 5 (cover the K-65 residues) is divided into two options that are evaluated separately.

6.2 COMPARATIVE ANALYSIS

The purpose of the following comparative analysis is to identify the relative advantages of each alternative with regard to the evaluation criteria. This comparative analysis describes the

actual selection process for identifying the preferred alternative and is summarized in Table 6-2.

6.2.1 Short-Term Protection of Public Health and Environment

This evaluation criterion addresses the effects of the alternative on human health and the environment during implementation of the removal action.

Alternative 2 - Tornado-Resistant Enclosures for Silos

The short-term effectiveness of this alternative also decreases the protection of the public health because of the proximity of the workers to the silos. Because the structures will be erected above the silos, there is a danger that an industrial accident will damage one or both silos.

The inventory of radon will not be diminished by the construction of the tornado-resistant enclosures. That inventory will probably increase because the head spaces between the concrete silos and the tornado-resistant enclosure will accumulate some equilibrium concentration of radon gas due to chronic radon gas emissions from the silos.

The advantage of this alternative is that handling of the residues is not required, and the volume of the stored wastes is not increased.

Alternative 3 - Relocation of Residues

Implementation of this alternative would significantly decrease the short-term protection of the public health because the residues would have to be handled from the time of removal from the silos to placement in the ISF. The residues will again be handled during the final remedial action. The ATE will provide protection during

removal action against chronic radon emissions but will offer no protection against tornado-induced failure of the domes because the ATE is not tornado-resistant. This alternative further decreases the short-term effectiveness because it offers a larger effective target area for a tornado. Until residue transfer and construction of the ISF is completed, both the transportation route and ISF will be sites for tornado-induced release. This alternative requires the siting and construction of a tornado-resistant ISF.

A large work force is required to be near the residues during removal of the residues from the silos, their packaging in **SECURE** containers, decontamination and transportation of the containers, and placement of the containers in the ISF. Should the final remedial action require further treatment of the residues, it would also require removal of the residues from the **SECURE** containers and decontamination of the containers.

The silo domes will have to be demolished and removed to access the residues; therefore, radon gas, generated by the residues, will enter the ATE. The ATE will then be the only barrier to the release of radon gas to the environment from the residues that have not been removed from the silos. The radon treatment system will require upgrading to handle the increase volume of air contained in the ATE.

TABLE 6-1
RESPONSIVENESS OF ALTERNATIVE vs. FAILURE MODE

	REDUCES OR MITIGATES THE RISKS OF:			
	SPONTANEOUS DOME FAILURE	TORNADO-INDUCED DOME FAILURE	CHRONIC RADON EMISSIONS	PREFERRED ALTERNATE CANDIDATE
ALTERNATIVE 1 NO ACT ION	No	No	No	No
ALTERNATIVE 2 TORNADO-RESISTANT STRUCTURE	Yes	Yes	Yes	Yes
ALTERNATIVE 3 RELOCATION OF RESIDUES	Yes	Yes	Yes	Yes
ALTERNATIVE 4 LIGHT STRUCTURE/RADON REMOVAL	Yes	No	Yes	No
ALTERNATIVE 5 COVER RESIDUES	Yes	Yes	Yes	Yes
ALTERNATIVE 6 REDUCE RADON INVENTORY	Yes	No	Yes	No
ALTERNATIVE 7 ADMINISTRATIVE CONTROLS	No	No	No	No

TABLE 6-2
COMPARATIVE EVALUATION OF REMOVAL ALTERNATIVES

ASSESSMENT FACTORS	DOES THE ALTERNATIVE SATISFY THE ASSESSMENT FACTOR?			
	ALTERNATIVE 2	ALTERNATIVE 3	ALTERNATIVE 5.1	ALTERNATIVE 5.5
	TORNADO-RESISTANT ENCLOSURES FOR SILOS	RELOCATION OF RESIDUES FROM SILOS	COVER RESIDUE WITH SAND	COVER RESIDUE WITH BENTONITE SLURRY
SHORT TERM PROTECTION OF PUBLIC HEALTH AND ENVIRONMENT	fair	poor	good	good
LONG-TERM PROTECTION OF PUBLIC HEALTH AND ENVIRONMENT	good	good	good	good (1)
REDUCTION OF TOXICITY, MOBILITY OR VOLUME	good	fair	good	good
CONSISTENCY WITH FINAL ACTION	fair	poor	good	good
TECHNICAL FEASIBILITY, DIFFICULTY	fair	poor	fair	good
TIMELINESS	10 months	32 months	10 months	10 months
COMPLIANCE WITH ARAR's	good	good	good	good
COST	*$5,000,000*	*$60,000,000*	*$2,100,000*	*$2,900,000*

Notes:
(1) - Dependent on ability to retain plastic condition. See Section 4.2.5.4

Alternative 5, Option 1 - Cover Residues with Sand

The short-term effectiveness of this alternative is initially decreased because the silo man-ways must be opened to place the sand over the residues. As sand and water are placed into the silo, equal volumes of mixed air and radon from the silo head space will be displaced into the ATE, increasing the radon concentration in the ATE. The silos will be opened during placement of sand, and the ATE will be the primary barrier to the uncontrolled release of radon to the environment. Because the personnel and equipment will be on or near the silo dome, there is increased probability for an industrial accident to damage one or both silo domes. The volume of waste will be increased by the volume of sand that is added to the silo.

Advantages to this alternative include immediate abatement of diffusion of radon into the silo head space as the residues are initially covered. Handling of the residues is not required, and the silo domes remain intact.

Alternative 5, Option 5 - Cover Residues with Bentonite Slurry

The short-term effectiveness of this alternative is the same as that for Alternative 5, Option 1.

6.2.2 Long-Term Protection of Public Health and Environment

This evaluation criterion addresses the effects of the alternative on human health and the environment after completion of the removal action.

The long-term protection provided by the remaining alternatives is significantly increased because of the reduction of chronic radon releases and the risk of residue release. The effectiveness of the

sand and bentonite layers is dependent on maintaining their moisture content. The moisture in the sand is free to both evaporate into the silo head space and/or settle into the residues therefore reducing somewhat the sands effect on radon diffusion.

6.2.3 Reduction of Toxicity/Mobility/Volume

Each of the alternatives reduces the amount of the radon gas released to the public and environment.

Alternative 2 - Tornado-Resistant Enclosures for the Silos

The enclosure structure eliminates the mobility of the K-65 residues and the radon gas and does not add to the final volume of contaminated wastes requiring disposal.

Alternative 3 - Relocation of Residues from the Silos

While the removal of the K-65 residues reduces their long-term mobility, the volume of wastes for ultimate disposal is greatly increased since the 1,100 **SECURE** containers must be disposed of as contaminated wastes with the residues.

Alternative 5 - Cover Residues

The cover material reduces the mobility of the residues and the gas, but adds to the final volume of wastes for disposal. The volume of waste is increased by 16 per cent.

6.2.4 Consistency with Final Action

This evaluation criterion addresses the compatibility of the removal action alternatives with the proposed final remedial action for the site. The final remedial action for neither the site nor the K-65 silos has been determined. However, it can be assumed

that the remedial action for the silos will fall into either an in situ remedy or a remedy involving removal of the residues. A comparison of each of the remedial alternatives will be made under both of the above general categories.

Alternative 2 - Construction of Tornado-Resistant Enclosures for Silos

This alternative requires the ultimate removal of the tornado-resistant structure to allow access to the silos and their contents and an additional volume of air will require treatment for the removal of radon to access the silos.

Alternative 3 - Relocation of Residues from Silos

This removal action requires double handling of the residues, notwithstanding the remedial action selected, because the residues will require transport to the selected treatment and disposal site. Should treatment of the residues be required by the final remedial action, they will have to be removed from the **SECURE** containers, and the containers will require decontamination. Should final disposal of the residues involve the use of the **SECURE** containers, their volume must be added to the waste volume.

Alternative 5, Option 1 - Cover Residues with Sand

This alternative increases the volume of waste, which will require further transport, treatment, and/or stabilization.

Alternative 5, Option 5 - Cover Residues with Bentonite Slurry

As with Alternative 5, Option 1, this alternative increases the volume of waste, which will require further transport, treatment, and/or stabilization.

6.2.5 Technical Feasibility

This evaluation criterion addresses the degree to which special processes or unusual construction equipment or techniques are required to be used for the action. Unusual or special activities and difficult construction practices introduce additional potential for problems and delays to occur as well as an increased possibility for the release of radon.

Alternative 2 - Construction of Tornado-Resistant Enclosures for Silos

A tornado-resistant enclosure will be constructed using standard structural steel design, fabrication, and construction techniques. No new technologies will be introduced. Special care must be taken to avoid potential construction accidents involving dropping materials on the dome, resulting in dome failure. The degree of difficulty is moderate. Large trusses and heavy construction equipment are required. Modification of the embankment will be required to accommodate the construction cranes.

Alternative 3 - Relocation of Residues from Silos

There is no new technology required by this alternative. The **SECURE** containers have been previously designed and prototypes have been fabricated and delivered. However, they have not been used in an actual remedial action to date. Equipment required for removal of the residues has been developed and used on previous similar projects. However, the difficulty factor is very high, especially considering the scope of this work as a removal action. A large number of containers is required and the procurement lead time will be long. The equipment configurations required for this project must be developed.

Alternative 5, Option 1 - Cover Residue with Sand

No new technologies are used for this alternative. This removal action only provides a new application of a proven technology. There is a minor degree of difficulty in developing the necessary equipment to spread the sand evenly over the residues through confined access locations and placement of the sand is expected to generate quantities of dust which will effect the operation of the RTS. However, these do not present serious obstacles.

Alternative 5, Option 5 - Cover Residue with Bentonite Slurry

This alternative also does not require new technologies. Bentonite has been used in other applications as a radon barrier. The use of bentonite in a silo is only a new application of proven technology. No rotating equipment is required to be lowered into the silo. The bentonite will be slurried in and only an "elephant trunk" is required in the silo. This minimizes the size and amount of construction equipment required. Bentonite slurry pumping equipment is readily available. The bentonite slurry is relatively fluid and self-leveling.

6.2.6 Timeliness

This evaluation criterion addresses the length of time to complete the implementation of the alternative after acceptance.

Alternative 3 - Relocation of Residues from the Silos

The time involved in the removal of the residues is estimated to be 32 months, which is considered to be excessive.

Remaining Alternatives

Each of the remaining alternatives involves nearly the same amount of time for implementation; all are less than 1 year from acceptance of alternatives to completion.

6.2.7 Compliance with ARARs

This evaluation criterion is used to determine whether the alternative will meet all of its federal and state ARARs. A comparison of the alternative's ability to comply with the ARARs is provided in Table 5-1.

6.2.8 Cost

This evaluation criterion is used to eliminate removal action alternatives for which the cost greatly exceeds that of other alternatives while providing only a marginal increase in the protectiveness to human health and the environment. A cost breakdown for the selected alternatives is provided in Table 6-3.

6.3 PREFERRED ALTERNATIVE

On the basis of the comparative analysis presented in Section 6.2, the recommended alternative is Alternative 5, Option 5, "Cover Residues with Bentonite Slurry." The application of a cover material atop the residues offers the most immediate protection from the effects of a tornado-induced or spontaneous dome failures as well as a reduction in the chronic radon releases from the silos. The use of a cover material allows rapid repair when compared with tornado-resistant enclosures (cover material replenishment versus enclosure engineering and construction).

443

TABLE 6-3
SUMMARY OF COST ESTIMATES (in 000's)

ITEM	ALTERNATIVE 2 TORNADO-RESISTANT ENCLOSURES FOR SILOS	ALTERNATIVE 3 RELOCATION OF RESIDUES FROM SILOS	ALTERNATIVE 5.1 COVER RESIDUE WITH SAND	ALTERNATIVE 5.5 COVER RESIDUE WITH BENTONITE SLURRY
SUBCONTRACTS/MATERIAL	3,299	6,910	ATE 750 SAND 393	ATE 750 BENTONITE 1,000
HEALTH PHYSICS	248	855	192	192
ENGINEERING	80	2,101	40	40
FIELD CONSTRUCTION/OPERATION	304	2,334	240	240
ISF	N/A	34,000	N/A	N/A
CONTINGENCY (30%)	1,085	13,800	485	668
TOTAL	*5,000*	*60,000*	*2,100*	*2,900*

The bentonite cover option was selected because bentonite's plasticity and the relative ease by which it can be placed into the silos will lead to substantial radon attenuation quicker than would the other options evaluated. Equipment for the mixing and placement of bentonite slurries is readily available by using "off-the-shelf" equipment, whereas equipment used to disperse sand inside the silos will have to be designed and custom fabricated. Additionally, the plasticity of bentonite enhances its ability to withstand and minimize the effect of falling debris on the cover layer. Also, due to its cohesiveness a bentonite cover is less likely than a sand cover to become mobilized and airborne under the influence of the high wind velocities associated with tornadoes. Therefore, both the mobility of the residues and the volume of radon gas inventory are reduced.

The preferred alternative provides a timely satisfaction of the objectives of the removal action using standard construction methodologies while offering the least potential for negatively impacting the full range of potential final remedial action alternatives.

REFERENCES

Bechtel National, Inc., 1990. Study and Evaluation of K-65 Silos for the Feed Materials Production Facility at Fernald, Ohio. Oak Ridge, Tennessee.

Camargo Associates, Ltd., 1986. K-65 Silos Study and Evaluation for the Feed Materials Production Center.

DOE (U.S. Department of Energy), 1988. RI/FS FMPC Development of Alternatives (Task 12) for the Feasibility Study. Rev. 1. DOE Oak Ridge Operations, Oak Ridge, Tennessee.

DOE, 1990a. Remedial Investigation and Feasibility Study (Draft), Feed Materials Production Center, Fernald, Ohio, FMPC Task 12 Report, Initial Screening of Alternatives for Operable Unit 4. DOE Oak Ridge Operations, Oak Ridge, Tennessee.

DOE, 1990b. Removal Site Evaluation - K-65 Silos DOE-1060-90 dated May 21, 1990

HEW (U.S. Department of Health, Education, and Welfare), 1970. Radiological Health Handbook.

Ijaz, T. et. al., 1990. A Baseline Risk Assessment for the K-65 Silos Using EPA Methodology for Applicability to the EE/CA (draft). University of Cincinnati.

IT/ASI (International Technology Corporation), 1988. Quantitative Analysis Report of Alternatives for Interim Remediation of K-65 Silos. Knoxville, Tennessee.

IT/ASI, 1990. Remedial Investigation and Feasibility Study, Feed Materials Production Center, Fernald, Ohio, FMPC Task 12 Report Initial Screening of Alternatives. 0006.EPA.HQR.DOER.

IT, 1990. Radiological and Chemical Baseline Risk Assessment Operable Unit 4 (Preliminary Draft)

Mihalovich, G. S., 1983. Analysis of the Impact of Various Sands and Thicknesses on Radon Attenuation and Gamma Shielding on the K-65 Silos (draft).

Nielson, K. K., 1988. Radon Flux Attenuation Factors

NRC, 1979 NUREG-0511 Generic Environmental Impact Statement on Uranium Milling

Rogers, V. C., et. al., 1983. Engineering Guides for Estimating Cover Material Thickness and Volume for Uranium Mill Tailings (draft). Rogers and Associates Engineering Corporation, Salt Lake City, Utah.

WMCO (Westinghouse Materials Company of Ohio), 1988a. Feed Materials Production Center Environmental Monitoring Annual Report for 1986. Document No. 2076. DOE Oak Ridge Operations, Oak Ridge, Tennessee.

WMCO, 1988b. Letter to James A. Reafsnyder. Subject: Completion Report for the Exterior Foam Application/Radon Treatment System Operations of the K-65 Interim Stabilization Project

APPENDIX

1990 Consent Agreement Requirements
for K-65 Silo 1 and 2
Removal Action 4

A. On or before August 1, 1990, DOE shall submit to EPA for approval an EE/CA for a removal action for Silos 1 and 2. At the same time, DOE shall make the EE/CA available for public comment in accordance with the NCP. As part of this EE/CA, DOE shall include the evaluation of the feasibility of construction of a protective structure enclosing Silos 1 and 2. Within thirty (30) days of EPA approval of the EE/CA, or within thirty (30) days of the close of the comment period, whichever is later, DOE shall submit to EPA for approval a work plan for the implementation of the selected removal action.

B. The work plans required by this section shall provide a concise description of the activities to be undertaken to comply with the requirements of this Agreement. The work plans shall also contain, but not be limited to, the following items: (1) a health and safety plan; (2) a sampling and analysis plan; (3) a quality assurance plan; and 4) a schedule for completion of the work to be performed.

C. Except as otherwise set forth in this section, any work plan, EE/CA, or proposal submitted pursuant to this section is subject to EPA review and modification, approval, or disapproval in consultation with the State. Any modification of any work plan, EE/CA, or proposal shall be consistent with the purposes of this Agreement, CERCLA, the NCP, and EPA guidance and policy documents. Within thirty (30) days of receipt of any work plan, EE/CA, or proposal, EPA shall notify DOE in writing, of modification, approval, or disapproval of the work plan, EE/CA or proposal or any part of thereof. Upon receipt of EPA's written notification of modification or disapproval of any work plan or EE/CA, DOE shall

submit a revised work plan, EE/CA or proposal within thirty (30) days of receipt of such notice. In the event subsequent disapproval of any work plan or EE/CA cannot be resolved by informal means, the dispute resolution process of Section XIV shall be invoked. Within five (5) days of EPA's approval, DOE shall commence implementation of the approved work plan or proposal in accordance with the requirements and time schedules set forth in the approved work plan or proposal. The fully approved work plans, EE/CAs and proposals required under this Section shall be incorporated into and made an enforceable part of this Agreement.

D. All work undertaken by DOE pursuant to this section shall be performed in conformance with the requirements of this Agreement, CERCLA, the NCP, and EPA guidance and policies. Except as provided for in Section 121 of CERCLA, DOE shall be responsible for obtaining all applicable State or local permits that are necessary for the performance of any work under this Agreement.

E. All materials removed from the Site shall be disposed of or treated at facilities in compliance with applicable or relevant and appropriate provisions of the RCRA, the Toxic Substances Control Act, 15 U.S.C. Section 2601 et seq., and other Federal and State requirements, including EPA's Off-Site Policy, (Revised Procedures for Planning and Implementing Off-Site Response Action - Interim Policy, from J. Winston Porter dated November 13, 1987). Permit requirements for such off-site disposal are given in Section XIII, Paragraphs C and D.

ATTACHMENT 1

POTENTIAL CONTAMINANT-SPECIFIC ARARs and TBCs

1. Resource Conservation and Recovery Act (RCRA), Subtitle C, Standards for Hazardous Waste Management (40 CFR, Parts 260-279).

   Establishes criteria and standards for identification, management, and permitting of hazardous waste and hazardous waste treatment, storage, and disposal facilities. Part 268 contains treatment standards for wastes restricted from land disposal. These standards are not applicable to the K-65 residues, because the residues are not hazardous wastes.

2. Safe Drinking Water Act (40 CFR Parts 141-149)
   (a) Maximum Concentration Levels (MCLs)
   (b) Maximum Concentration Level Goals (MCLGs)

   Establishes MCLs, which are enforceable standards for chemicals in public drinking water supply streams. MCLGs are nonenforceable guidelines that do not consider the technical feasibility of contaminant removal. The SWDA also authorizes: The Underground Injection Control (UIC) Program; The Sole-Source Aquifer Program; The Wellhead Protection Program.

   Remedial actions under CERCLA and RCRA generally use MCLs as groundwater quality restoration goals. MCLGs are considered in

CERCLA remedial action planning, pursuant to CERCLA Section 121(d)(2)(a)(ii).

3. Clean Water Act (CWA) (40 CFR Parts 104 -140) and Federal Ambient Water Quality Criteria (AWQC) (45 CFR Part 231).

CWA governs point-source discharges through the National Pollutant Discharge Elimination System (NPDES), dredge and fill activities that may degrade or disturb wetlands or other aquatic habitats, discharges of dredged or fill materials, and oil and hazardous spills into United States waters. The AWQC are used as guidelines in accessing the impact of contaminants on water quality in remedial action analyses.

4. Environmental Radiation Standards for Nuclear Power Operations (40 CFR 190) (EPA).

Establishes standards for the radiation doses received by members of the public in the general environment, and to radioactive materials introduced into the environment as the result of operations that are part of a nuclear fuel cycle. Milling and chemical conversion of uranium ore are defined as parts of the uranium fuel cycle.

Requires that the annual dose equivalent not exceed 25 mrem to the whole body, 75 mrem to the thyroid, and 25 mrem to any other organ of any member of the public, as a result of exposures to

planned discharges of radioactive materials, radon and its daughters excepted, to the general environment from uranium fuel cycle operations and to radiation from these operations.

Limits the total quantity of radioactive materials entering the general environment from the entire uranium fuel cycle, per gigawatt-year of electrical energy produced, to 50,000 Ci of ^{85}Kr, 5 mCi of ^{129}I, and 0.5 mCi combined of ^{239}Pu and other alpha-emitting transuranic radionuclides with half-lives greater than 1 year.

These standards are targeted at nuclear power facilities and spent fuel reprocessing operations, and are not applicable to mining operations and waste disposal sites. The terms "general public" and "general environment" refer to locations outside the facility. They are, however, relevant or appropriate, to the extent that the K-65 residues are derived from the milling of uranium ore and the chemical conversion of uranium. The standards for annual dose equivalent (e.g., 25 mrem) can serve as guidelines for protection of off-site populations during and after the removal action.

5. Health and Environmental Protection Standards for Uranium and Thorium Mill Tailings (40 CFR 192) (EPA).

Applies to the control of residual radioactive material at designated processing or repository sites under Section 108 of the Uranium Mill Tailings Radiation Control Act of 1978, and to restoration of such sites following any use of subsurface minerals under Section 104 (h).

The standards have subparts applicable to:

A. Control of Residual Radioactive Materials from Inactive Uranium Processing Sites

B. Cleanup of Land and Buildings Contaminated with Residual Radioactive Materials from Inactive Uranium Processing Sites

C. Implementation provisions

D. Management of Uranium Byproduct Materials Pursuant to Section 84 of the Atomic Energy Act of 1954, as amended

E. Management of Thorium Byproduct Material pursuant to Section 84 of the Atomic Energy Act of 1954, as amended

Of these subparts, D and E appear to be relevant or appropriate to the K-65 silos. Subparts A and B are not applicable, because the FMPC is an active site.

Subpart D largely places controls on the groundwater discharges, as well as delineate liner requirements for surface impoundments. Standards applicable after closure are established:

- Closure design should meet 40 CFR 264.111, except for radon emission

- The design should provide reasonable assurance of effectiveness for 1000 years (to extent reasonably achievable), and 200 years in any case

- Limit releases of ^{222}Rn to the atmosphere to less than an average release rate of 20 pCi/m^2-sec.

Subpart E applies the same standards promulgated for uranium tailings. It requires that standards for ^{222}Rn and ^{226}Ra also apply to ^{220}Rn and ^{228}Ra, respectively. It additionally requires that the annual dose equivalent to members of the public arising from the planned discharge of radioactive materials, ^{222}Rn and its daughters excepted, not exceed 25 mrem/y (whole body), 75 mrem/y (thyroid), and 25 mrem/y (any other organ).

6. Clean Air Act (CAA) (42 USC 4701)

National Emission Standards for Hazardous Air Pollutants (40 CFR Part 61)

There are two key subparts applicable to facilities owned or operated by DOE:

(1) Subpart H - National Emission Standards for Emissions of Radionuclides other than radon from Department of Energy Facilities.

This requires that emissions of radionuclides other than ^{222}Rn and ^{220}Rn not exceed those amounts that would cause any member of the public to receive in any year an effective dose equivalent of 10 mrem/y.

The standard does not apply to disposal at facilities subject to 40 CFR 191, Subpart B, or to 40 CFR 192 (Uranium and Thorium Mill Tailings).

(2) Subpart Q - National Emission Standards for Radon Emissions from Department of Energy Facilities.

These standards are applicable to the design and operation of all storage and disposal facilities for radium - containing material [i.e., byproduct material under the Atomic Energy Act, as amended, Section 11 e (2)]; the Feed Materials Production Center, Fernald, Ohio is one of the DOE facilities explicitly

cited in the regulation. The standard requires that no source at a DOE facility emit more than 20 pCi/m^2-s of ^{222}Rn as an average for the entire source, into the air. It also specifies that this requirement will be part of any Federal Facility Compliance Agreement reached between DOE and EPA.

Designated facilities are exempt from the reporting requirements specified in 40 CFR 61.10.

7. Ohio General Radiation Protection Standards (OAC 3701-38-01 through -39)

These standards establish registration, performance, monitoring, reporting, and disposal requirements to users of radiation sources that are not subject to regulation by the AEC. By current usage, reference to the AEC is taken to mean the Nuclear Regulatory Commission. As a general matter, however, the Atomic Energy Act, as amended, precludes regulation of wastes subject to the Act by state or local law or regulation.

The standards are basically intended to control sources of radiation used for medical or scientific purposes. It establishes performance standards for a number of radioactive materials for worker exposure within restricted areas, and for general public exposure in unrestricted areas. The standard for ^{222}Rn for worker exposure is 1 x 10^{-7} uCi/mL (air) for a 40-

hour period over a 7-day week; the standard for the public is 3×10^{-9} uCi/mL.

While these standards are not applicable to the K-65 silo removal section, they may be relevant or appropriate.

8. Ohio Standards for Radiation Handling, General Provisions (OAC 3701-70-01 through -06)

These standards establish record keeping and inspection requirements for users of radiation-generating equipment. They are explicitly not applicable to the Federal government or any of its agencies. The standards are designed to ensure that radiation-generating and emitting equipment used in medical, veterinary and scientific facilities is properly inspected by qualified technical specialists. The rule does not place performance standards on these devices. It is not an ARAR for the K-65 silo removal action.

9. Ohio Ambient Air Quality Standards OAC 3745-17-02

These rules establish ambient air quality standards for particulate matter and require emission testing for various new and existing sources, such as coke oven batteries. Fugitive dust emission standards are also included. Most of the standards focused on stationary sources emitting particulate

matter from heat or power generation. The fugitive dust control standards require "reasonably available control" measures, and are targeted at dust suppression for roads and bulk material transfer operations (e.g., grain).

These standards are not applicable to the K-65 removal action, but the fugitive dust control requirements should be considered if removal of the K-65 residues from the silos is contemplated.

ATTACHMENT 2

POTENTIAL LOCATION-SPECIFIC ARARs and TBCs

1. Regulation of Activities Affecting Waters of the United States (Army Corps of Engineers) (33 CFR 320-329); and Wetlands and Navigable Waterways Protection (Ohio OAC 3742-32).

   These regulations are applicable to activities in wetlands and navigable waters. Some actions may require water quality certifications under Section 401 of CWA. Activities, such as 401 Certifications, which are under the jurisdiction of COE, are reviewed by the Ohio Department of National Resources under OAC 3742-32.

2. EPA's Groundwater Protection Strategy.

   Establishes EPA's policy (not a promulgated regulatory standard) that groundwater should be protected for its highest present or potential beneficial use. The policy is intended to be incorporated into future regulations for EPA programs affecting groundwater quality. The strategy designated three categories of groundwater (I, II, III a, b). The classification influences the level of remedial response.

3. Endangered Species Act of 1978 (16 USC 1531).

Provides for consideration of the impacts of remedial actions on endangered and threatened species, should any be located within, or affected by, the area of influence of the project.

4. Fish and Wildlife Improvement Act of 1978 (16 USC 742), Fish and Wildlife Coordination Act (16 USC 661).

   Provides for consideration of the impacts of remedial actions on wetlands and protected habitats.

5. Executive Order 11990 (42 FR 15123) - Protection of Wetlands.

   Establishes policies for the Federal Government concerning wetland protection.

6. Rivers and Harbors Act of 1899 (33 CFR 320-327).

   Establishes general standards for water quality.

7. Ohio Location Standards (OAC) 3745-54-18).

   Places restrictions on hazardous waste treatment, storage, and disposal facilities in areas subject to seismic activity and in floodplains.

ATTACHMENT 3

POTENTIAL ACTION-SPECIFIC ARARs and TBCs

1. OSHA Requirements (29 CFR Parts 1910, 1926, and 1904).

   Establishes standards for protection of workers engaged in on-site remedial activities. Applicable to private sector employers. Public sector employers (e.g. DOE) may adopt similar requirements as a matter of policy.

2. Nuclear Regulatory Commission's Licensing Requirements for Land Disposal of Radioactive Waste (10 CFR Part 61)

   Establish criteria for the land disposal of radioactive wastes received from other persons. They are not applicable to high level, uranium, or thorium tailings or wastes (by-products) in quantities greater than 10,000 kilograms and containing more than 5 mCi of ^{226}Ra, or as subject to 10 CFR 20.

   The Department of Energy is not subject to these standards, to the extent that Section 202 of the Energy Reorganization Act of 1974 excludes it.

Concentrations of radioactive materials released from land disposal facilities to groundwater, surface water, air, soil, plants, or animals must not result in an annual dose exceeding an equivalent of 25 mrem to the whole body, 75 mrem to the thyroid, and 25 mrem to any other organ of any member of the public.

Also establishes substantial design and operational criteria for land disposal facilities.

3. Federal Compliance with Pollution Control Standards. Executive Order 12088 (43 FR 47707).

Requires that all federal facilities and activities comply with applicable pollution control standards.

4. The Atomic Energy Act of 1954, as amended (42 USC 2011).

As amended, the Act establishes the overall scope and framework for many DOE operations and authority. Section 11 provides definitions for various classes of radioactive wastes pertinent to establishing remediation standards for the K-65 wastes. In particular, it establishes that K-65 wastes are byproduct material because they are tailings or wastes produced by the extraction or concentration of uranium or thorium from any ore processed primarily for its source material content.

5. Department of Energy Orders.*

a) General Environmental Protection Requirements (5400.1).

Establishes general requirements for the environmental compliance procedures for DOE facilities

b) Environmental Compliance Issue Coordination (5400.2).

Establish DOE requirements for coordination of significant environmental compliance issues.

c) Radiological Effluent Monitoring and Environmental Surveillance (5400.xy).

Describes requirements and provides guidance for monitoring effluent and conducting environmental surveillance.

d) CERCLA Program (5400.4)

Establishes general requirements for hazardous waste cleanup and notification.

f) DOE Order 5400.5 - Radiation Protection of the Public and the Environment

This order, effective 5/8/90, establishes limits on public exposure to radiation. It also directs that potential exposure to the public be as far below these limits as is reasonably achievable (ALARA). It requires that DOE facilities have the capability to monitor routine and non-routine releases, and to asses doses to the public DOE installations and DOE contractors must comply with the order.

Field Office Managers are directed to either certify (in early April) that their facilities are in compliance , or request an exemption for areas of non-compliance along with a plan for achieving compliance.

The order replaces DOE order 6480.1A, Chapter XI. It adopts and implements radiation protection dose standards consistent with the 1977 recommendations of the International Commission on Radiological Protection (ICRP). To the extent required by the Clean Air Act, exposure of the public to radioactive materials released to the atmosphere must not exceed an effective dose equivalent of 10 mrem per year. The order also directs that DOE installations comply with the requirements of NRC and EPA regulations found in 10 CFR Parts 60 an 72 and 40 CFR Parts 61, 191, and 192.

It establishes a primary standard of 100 mrem effective dose equivalent per year to members of the public as a consequence of all routine DOE activities, as well as remedial actions. This is five times less than the previous primary limit. The higher 500 mrem effective dose equivalent per year can be authorized for a limited period if justified by unusual operating conditions. DOE operators are required to report DOE-related effective dose equivalent contributions of 10 mrem per year or more to DOE Headquarters.

Liquid radioactive waste streams are to be treated to the "best available technology" (BAT) level. Normally, waste steams exceeding the "Derived Concentration Guide" (DCG) reference values at the point of discharge will require BAT treatment.

It prescribes the use of 3 EPA models to evaluate potential doses from airborne releases; these are: AIRDOS/RADRISK;

CAP-88, and AIRDOS-PC. It also prescribes the use of specific dose conversion factors and derived concentrations needed to make dose evaluations. Doses to the public must be evaluated to assess compliance with dose limits, as well as to assess exposures from unplanned events.

The Order presents derived concentration guides (DCG) for a comprehensive list of radioisotopes. The air immersion (annual average for on and off site) value for ^{220}Rn, as well as ^{222}Rn, is 3×10^{-9} $\mu Ci/mL$. The instantaneous ^{222}Rn concentration should not exceed 100×10^{-9} $\mu Ci/mL$ Values for inhaled air for radium species are:

^{223}Ra	2×10^{-12} $\mu Ci/mL$
^{224}Ra	4×10^{-12} $\mu Ci/mL$
^{225}Ra	2×10^{-12} $\mu Ci/mL$
^{226}Ra	1×10^{-12} $\mu Ci/mL$
^{227}Ra	4×10^{-8} $\mu Ci/mL$
^{228}Ra	3×10^{-12} $\mu Ci/mL$

Values for thorium and uranium are:

^{230}Th	4×10^{-14} $\mu Ci/mL$
^{238}U	1×10^{-13} $\mu Ci/mL$

Air immersion DCGs were calculated for a continuous, nonshielded exposure via immersion in a semi-infinite atmospheric cloud. The air inhalation values are based on the assumption of inhalation of 8,400 cubic meters of air, 24 hours per day, 365 days per year.

g) National Environmental Policy Act (5440.1c).

Establishes DOE's policy for implementation of the National Environmental Policy Act of 1969 (PL 91-90).

h) Environmental Safety and Health Program for DOE Operations. (5480.1B)

Establishes an overall framework of program requirements for safety, environmental, and health protection, including criteria for radiation exposure and radioactive effluent releases for operating facilities and sites.

i) Environmental, Safety, and Health Protection Standards. (5480.4)

Identifies mandatory and references environmental, safety and health standards.

j) Radiation Protection for Occupational Workers (5480.11)

Establishes radiation protection standards and program requirements for workers at DOE facilities.

k) Environmental, Safety, and Health Appraisal Program. (5482.1B)

Establishes an environmental, safety, and health appraisal program for DOE.

l) Environmental Protection, Safety, and Health Protection Information Reporting Requirements. (5484.1)

Establishes requirements and procedures for reporting and investigating matters of environmental protection, safety, and health protection significant to DOE operations.

m) Quality Assurance (5700.6B).

Establishes DOE's quality assurance program.

n) Radioactive Waste management (5820.2A) and in particular, Chapter III: Management of Low-Level Waste.

Establishes performance objectives for management of low-level wastes and mixed radioactive wastes. external exposure to waste and releases to surface water, groundwater, soil, plants, and animals are not to exceed an effective dose equivalent of 25 mrem/y to any member of the public.

Releases to the atmosphere shall meet the requirements of 40 CFR Part 61. ALARA principles should be followed.

Committed effective dose equivalents received by individuals who inadvertently intrude into the facility after loss of active institutional control (100 years) should not exceed 100 mrem/y for continuous exposure or 500 mrem for a single acute exposure.

Groundwater resources should be protected in a manner consistent with federal, state and local requirements.

Performance assessments, including monitoring, should be prepared and maintained, to show compliance with performance objectives.

443

* These are not promulgated standards, and do not meet the strict definition of ARARs. However, they are mandatory at DOE facilities, under DOE policy. They meet the definition of 'To Be Considered' policies.