R-010-208.11

456

ENGINEERING EVALATION/COST ANALYSIS WASTE PIT RESPONSIVENESS SUMMARY

08/01/90

FMPC.003.6
ASI/DOE-ORO
147
SUMMARY
OU1

[redacted]

456

Engineering Evaluation/Cost Analysis Waste Pit

RESPONSIVENESS SUMMARY

FEED MATERIALS PRODUCTION CENTER
Fernald, Ohio

Prepared for

U.S. Department of Energy
Oak Ridge Operations Office

Prepared by

Advanced Sciences, Inc.
International Technology Corp.

August 1990
FMPC.003.6

TABLE OF CONTENTS

SECTION		PAGE
INTRODUCTION		1
SECTION 1:	Treatment Issues	3
SECTION 2:	Relationship with Operable Unit 1	5
SECTION 3:	Data Issues	7
SECTION 4:	Basis for Recommended Alternative	8
SECTION 5:	Contaminants of Concern	10
SECTION 6:	Disposal/Handling of Waste	12
APPENDIX A:	Detailed Responses to U.S. and Ohio EPA Comments	

WASTE PIT EE/CA RESPONSIVENESS SUMMARY
INTRODUCTION

On May 30, 1990, the United States Department of Energy (U.S. DOE) published a draft report outlining its near-term plans for controlling radioactively contaminated storm water runoff from the waste pit area of U.S. DOE's Feed Materials Production Center (FMPC) near Fernald, Ohio. This area and other environmental issues were identified during U.S. DOE's major environmental study, known as the Remedial Investigation and Feasibility Study (RI/FS).

The draft decision-making document for the waste pit removal action published May 30, 1990 is the *Engineering Evaluation and Cost Analysis (EE/CA), Waste Pit Area, Storm Water Runoff Control.* It identifies U.S. DOE's near-term approach for controlling storm water runoff from the waste pit area, and includes U.S. DOE's rationale for selecting this approach. Pursuant to comments received from the community and the U.S. Environmental Protection Agency (U.S. EPA) and the Ohio Environmental Protection Agency (OEPA), and the public, U.S. DOE revised the EE/CA on August 10, 1990.

This Responsiveness Summary was prepared pursuant to the terms of the 1990 Consent Agreement between U.S. DOE and U.S. EPA, as well as relevant federal laws, regulations, and guidelines, including:

- Comprehensive Environmental Response, Compensation, and Liability Act (CERCLA), 42 United States Code, Section 9601, *et seq.*, as amended
- National Oil and Hazardous Substances Pollution Contingency Plan (NCP), 40 Code of Federal Regulations, Sections 300.67 and 300.415
- Community Relations in Superfund: A Handbook, Interim Version, June 1988, EPA/540/6-88/002

The EE/CA documents and the U.S. DOE's analysis of five alternative approaches to controlling contaminated storm water runoff from the waste pit area include:

Alternative 1	No Action
Alternative 2	Surface Capping
Alternative 3	Surface Capping with Lateral Drainage Sump Collection
Alternative 4	Runoff Collection and Treatment
Alternative 5	Source Removal

U.S. DOE's recommended alternative for the waste pit area is Alternative 4. It calls for collecting storm water runoff from the waste pit storage area and treating the water for uranium through a pilot plant before discharging the water into the Great Miami River.

This alternative (without the pilot plant) was discussed in detail during the Waste Pit EE/CA Workshop on June 6, 1990. The workshop included an opportunity for participants to make formal verbal comments. The public comment period began on May 30, 1990 and concluded July 2, 1990. In addition to comments from U.S. and Ohio EPAs, U.S. DOE received comments from the Paddys

Run Road Site Project and four members of the local community. U.S. DOE also considered significant comments from the June 19, 1990 Community Roundtable on radiation.

After considering comments from the public and U.S. and Ohio EPAs, U.S. DOE has revised the EE/CA. The major revisions to the report are as follows:

- Storm Water Runoff Treatment -- A pilot treatment plant for uranium has been added to Alternative 4. The plant will be available for operation in the Spring of 1991 and can treat 10 gallons per minute (gpm) annualized flow with an estimated uranium reduction from 1 part per million (ppm) to 20 parts per billion (ppb).

- Additional Capping/Lining -- The foundation of the storm water retention basins have been committed to a permeability of not greater than 1×10^{-7} cm/sec (vertically).

- Radon Flux -- An Applicable or Relevant and Appropriate Requirement (ARAR) has been added for 40 CFR 61, Subpart Q, and a commitment for radon flux measurements has been made.

- Risk Assessment -- A new appendix has been added to reflect additional risk assessment information. (This addition is consistent with the recent revision of the South Plume EE/CA.) Responses to U.S. EPA for many of the risk-related comments are being addressed through this new appendix.

The reasons for these changes are explained in this summary and in the revised EE/CA.

This Responsiveness Summary, together with the revised EE/CA, explains U.S. DOE's rationale for the revisions and the selection of the recommended alternative. The revised EE/CA has been submitted to U.S. EPA for modification, approval, or disapproval under Section IX of the CERCLA Consent Agreement.

This Responsiveness Summary summarizes (by topic) and responds to significant comments received during the public comment period. This Responsiveness Summary is U.S. DOE's final response to all comments addressing the Waste Pit EE/CA. Detailed responses to U.S. and Ohio EPAs' comments are included in Appendix A.

Summary of Comments

In general, the community raised concern about the recommended alternative. Specifically, commenters objected to the quantitative increase in uranium that would be discharged into the Great Miami River and the potential exposure to uranium for the population downstream. Commenters also questioned the need for cost-effectiveness to be included as a criterion for evaluating all removal action alternatives. Many commenters said they wanted actual treatment of the storm water runoff to remove all above-background concentrations of uranium before discharge into the river. Commenters expressed concern about potential adverse impacts on health and the environment because of the additional release of uranium into the river. But in the absence of an accelerated final remedy that would address the source of the storm water runoff contamination, most members of the public said they preferred a combination of Alternative 2 and Alternative 4. Alternative 2 calls for capping the waste pits, with clay or a synthetic cover.

SECTION 1

Treatment Issues

Comment:

The community wanted to know how the storm water runoff would be treated and what kinds of contaminants would be removed. Several commenters focused on the advanced waste water treatment facility that is planned for the FMPC and wanted to know if that technology could be accelerated for the waste pit removal action. One commenter suggested that the waste pits be isolated through capping until an advanced treatment system could be built to clean up the area.

Response:

Alternative 4, as originally proposed, did not include an option to treat the runoff before it was discharged into the FMPC's effluent line. Rather, the waste water was to have been mixed with the FMPC effluent and discharged into the Great Miami River. About 10 percent of the uranium in the storm water runoff would settle before discharge. Because U.S. DOE concurs that only a small portion of the uranium contamination can be treated by the biodenitrification system, U.S. DOE proposes to install a pilot scale waste water treatment facility as part of Alternative 4 to demonstrate technologies applicable to the advanced waste water treatment facility.

In the revised EE/CA, U.S. DOE has added treatment of the storm water runoff to its recommended alternative. U.S. DOE now is proposing a pilot plant to treat the uranium in the storm water runoff. The pilot plant will use either ion-exchange resins or reverse osmosis, which are considered the best technologies for removing uranium that has dissolved in water. (An ion-exchange resin could be described as a special filter to "pull" uranium from the water.) The pilot plant should be in place by spring 1991, and it will treat the storm water runoff to 20 parts per billion (ppb), which is below the 30 ppb proposed by U.S. DOE as the allowable concentration of uranium in groundwater. The pilot plant is a precursor to the advanced waste water treatment facility planned for the FMPC. U.S. DOE has received congressional authorization for the advanced waste water treatment system, which is scheduled to be operational in 1994. When completed, the treatment facility will allow U.S. DOE to meet its goals for discharge of uranium to the river.

The pilot plant will treat 10 gallons of water per minute (gpm), while the storm water runoff flow is estimated to average 24 gpm. The pilot plant's initial size is what can be built in a timely, cost-efficient manner.

The advanced waste water treatment facility is intended to treat FMPC waste water discharge to the best available technology for the removal of radioactivity. U.S. DOE Order 5400.5 requires best available technology as the required level of treatment for liquid wastes containing radioactive material for streams that contain quantities of radioactivity in excess of this order. The streams targeted for treatment are the general sump, biodenitrification facility, sewage treatment plant, waste pit perimeter area; and storm waste retention basin. The FMPC's targeted treatment technologies are ion exchange, reverse osmosis, or a combination of both -- whichever provides the best available technology. The final design will be based on treatability studies that are presently being conducted. The FMPC has completed bench scale studies that showed that ion exchange and reverse osmosis are capable of removing uranium. The FMPC is in the process of awarding a contract for testing an on-site demonstration unit. This unit shall provide performance data on ion exchange and reverse osmosis.

The FMPC also is moving forward on the design effort for this advanced waste water treatment facility. At present, the FMPC is in the design phase of the advanced waste water treatment facility. This treatment flow is comprised of 700 gpm for treatment of the discharge of the storm water retention basin and 400 gpm for treatment of other streams, including process waste water. The waste pit runoff would be handled as part of the process waste water. The 700 gpm system will most likely contain clarification, filtration, and ion exchange. The 400 gpm system will include all of the equipment of the 700 gpm system, with the addition of reverse osmosis. This facility is designed to treat to a level of approximately 20 ppb of uranium.

The specific design information that is available regarding Alternative 4 is information on the collection and pumping of storm water from the waste pit perimeter area to the biodenitrification surge lagoon. The same level of engineering detail is not available for the advanced waste water treatment facility. In an effort to give a consistent level of detail with the other alternatives considered, many of the engineering details were not included in the EE/CA. Hydraulic design information regarding the collection system is available upon specific request to U.S. DOE; however, it should be noted that the same level of detail is not yet available for the other alternatives.

In addition to the pilot plant, the storm water runoff that is collected from the waste pit area will be channeled into the FMPC's waste water system before ultimate discharge to the Great Miami River. The runoff also will be treated in the biodenitrification system, where solids settle out of the water. U.S. DOE estimates that about 10 percent of the uranium in the storm water runoff also will settle out because it is attached to solids.

SECTION 2

Relationship with Operable Unit 1

Comment:

The commenters wanted to know how the recommended alternative would fit into the final remedial action for Operable Unit 1. Specifically, the commenters wanted more detail about the alternatives being considered for Operable Unit 1, as well as wanting to know how those alternatives influenced the objectives of the removal actions. One commenter also wanted to know how long the removal action would take before the final remedy is implemented.

Response:

Removal actions, as described in the National Oil and Hazardous Substances Contingency Plan (NCP) of April 1990 (40 Code of Federal Regulations 300.415), primarily are intended to eliminate, minimize or stabilize a release or a threat of release prior to a final remedy if there is a threat to public health or the environment. A second reason for implementing a removal action is to mitigate -- in the short term -- contamination migration pending final action. Also, to the extent practicable, removal actions also are to be consistent with the anticipated long-term remedy.

Moreover, although these NCP requirements may not ultimately apply to U.S. DOE, federal guidelines for removal actions call for the action to be taken within 12 months and at a cost of no more than $2 million. CERCLA response actions requiring more time and money must be evaluated using the more comprehensive criteria of the remedial process.

The remedial task objectives of Operable Unit 1, however, are to:

- Prevent ingestion of or direct contact with chemical and radiological wastes
- Prevent release of airborne contaminants from wastes, including radon
- Prevent migration of contaminants to environmental media that would exceed public health or environmental standards

The remedial action objectives, while general, were formulated to protect human health and the environment by isolating, removing, or treating the source of contamination. Under the current timetable, the removal action for the waste pit area is estimated to last about five years, at which time the final remedy will be underway.

In addition to the no-action alternative, there are five remedial action alternatives under consideration for Operable Unit 1. They are:

- Alternative 0 — No Action
- Alternative 1 — Nonremoval, Slurry Wall, and Cap
- Alternative 2 — Nonremoval, Physical Stabilization, Slurry Wall, and Cap

- Alternative 3 — Nonremoval, Vitrification, and Cap
- Alternative 4 — Removal, Sludge Treatment, and On-Site Disposal
- Alternative 5 — Removal, Sludge Treatment, and Off-Site Disposal

These alternatives were evaluated according to their ability to meet the general objectives and screening criteria. The alternatives that are to be studied in more detail are Alternative 2, nonremoval, physical stabilization, slurry wall, and cap; Alternative 4, removal, sludge treatment and on-site disposal, and Alternative 5, sludge treatment and off-site disposal.

The removal action is the bridge to the final remedy. The removal action is the interim step to protect the public health and the environment, and the recommended alternative is consistent with the remedial actions under consideration pending implementation of the final remedy.

SECTION 3

Data Issues

Comment:

One commenter wanted to know why there wasn't any recent data incorporated into the Waste Pit EE/CA, particularly the results of the 1989 Environmental Monitoring Report. Other commenters questioned whether U.S. DOE has performed sufficient testing for contaminants other than uranium.

Response:

Additional wells and monitoring locations are being determined as part of the continuing RI/FS study, and final design of the alternative will be based on all existing data. The additional monitoring locations also will help U.S. DOE determine if there are any other contaminants present in concentrations above allowable limits. Placement of the monitoring wells and the criteria for their locations will be presented in the work plan prepared for the design and implementation of the selected alternative. Updates of results and progress will be provided periodically through community meetings.

But in keeping with the objective of providing a timely action in the removal process, U.S. DOE used earlier data because it represented the most complete information for evaluation purposes. The earlier data also established a "cut off point" so that the waste pit process can continue on an accelerated schedule. The U.S. DOE will include later data as the basis for action unless the more recent data indicate deviations from the earlier information. To date, however, the more recent data are consistent with the earlier information.

SECTION 4

Basis for Recommended Alternative

Comment:

The commenters wanted more clarification on how long it would take to implement the alternatives discussed in the waste pit EE/CA, and they also were concerned about the extent of treatment under Alternative 4, the collection and treatment option. Several commenters wanted to know why collecting and treating the storm water runoff and then discharging the water into the Great Miami River represented a better choice than capping the pits.

Response:

Timeliness is one of the factors that must be considered in removal actions, and Alternative 4 is more timely than Alternative 2. The time estimates for the alternatives are:

• Alternative 1 (No Action)	No time element involved
• Alternative 2 (Capping)	Nine to 12 months to design; 12 months to build
• Alternative 3 (Cap and Collect)	Yet to be determined
• Alternative 4 (Collect and Treat)	Design complete; 10 months to build
• Alternative 5 (Source Removal)	Yet to be determined

Alternative 4 is more timely because the design work is complete; the storm water collection system has been designed as part of other cleanup activities at the FMPC. The removal action also can be well underway before the final remedial action is selected. Under the current schedule in the April, 1990 CERCLA Consent Agreement, the proposed plan for Operable Unit 1 is not due until May 16, 1991.

But timeliness is not the only factor that must be considered when evaluating the appropriateness of a removal action. U.S. EPA guidelines say that effectiveness, implementability and cost must be considered when evaluating alternatives. In assessing the removal action alternatives, U.S. DOE eliminated Alternative 5, source removal, from consideration as a short-term action; however, source removal is being considered as a final remedial action. Alternative 1, the no-action option, was eliminated because it does not provide any protection of the public health and environment -- primary objectives of any removal action. Alternative 3, capping and collection, was not recommended because it is not consistent with the remedial alternatives for Operable Unit 1 and Operable Unit 5 unless capping is selected.

Alternatives 2 and 4 were the most effective at meeting the removal action objectives, but Alternative 2, capping alone, is not consistent with all the remedial alternatives for Operable Unit 1 and Operable Unit 5 unless capping is the final remedy. Alternative 4, though, is consistent will all remedial alternatives for both operable units. With the addition of the pilot treatment plant, Alternative 4 also does more than Alternative 2 to reduce the amount of uranium into Paddys Run and the Great Miami River.

Alternative 2 also does not protect the public health and environment quite as well; damage to the cap potentially could increase the risk of exposure to the public and the environment, particularly because there is no collection and treatment system included in this option.

U.S. DOE considered the possible effects to other users in arriving at its recommended alternative and, after evaluation, the recommended collection and treatment alternative will have the fewest negative impacts on other users. If Alternative 4 is implemented, it actually will reduce the toxicity of the storm water runoff by reducing uranium concentrations. Thus, under the circumstances, collecting and treating the uranium-contaminated water before discharging it into the Great Miami River currently represents the best response to the waste pit issue. The recommended alternative fulfills its objectives of protecting the public health and the environment in the short-term, partly because it is a timely action and partly because of the overall lowering of uranium concentrations. And although it may seem that the recommended alternative increases the mobility of the uranium, physical movement alone is not the sole criterion used in judging the effectiveness of a recommended action.

Source controls and potential ground water contamination for the waste pit area are being fully evaluated in the feasibility study (FS) for Operable Unit 1. The purpose of the EE/CA is narrower than that of the FS; thus, it is intended to prevent or minimize exposures to the public from contaminated surface water until a final remedy can be implemented. Thus, source control and ground water contamination is not addressed in this EE/CA.

As part of the waste pit EE/CA process, a wide range of short-term options were reviewed to determine if they met the primary goals of protecting public health and the environment in a timely, cost-effective manner. Some options were eliminated early in the process because they would not address the contamination adequately, could not be implemented, or would have had excessive costs compared to an alternative with the same degree of protection. Because the waste pit area requires more immediate attention, the EE/CA analyzes the best way to deal with the storm water runoff from the waste pits in the short term, with the technology or facilities available now, while not interfering with any long-term remedial actions and ultimate site cleanup.

SECTION 5

Contaminants of Concern

Comment:

Commenters were concerned that there may be other contaminants in the storm water runoff from the waste pit area. Specifically, several commenters asked whether there would be treatment for volatile organics or for other radionuclides, such as thorium. Still other commenters said they were concerned about contaminants percolating from the pits into the groundwater. The commenters said the EE/CA did not adequately address issues related to other contaminants and that a broader list of contaminants of concern would more fully meet removal action objectives identified in the Consent Agreement.

Response:

U.S. DOE fully intends to identify all contaminants for the final remedy. But uranium initially has been identified as the primary contaminant of concern because it is the element that has consistently shown up in high concentrations in storm water runoff samples. U.S. DOE concurs with one commenter that data on other contaminants in storm water samples is limited. U.S. DOE is checking for organics and other potential contaminants but to date, volatile organics generally are not found in surface water samples. This may be because they are very mobile, e.g. they can evaporate quickly.

Additional wells and monitoring locations are being determined as part of the continuing RI/FS study, and final design of the alternative will be based on all existing data. As suggested by the commenter, the U.S. DOE will analyze samples for other contaminants. The additional monitoring locations and resulting analytical data also will help U.S. DOE determine if there are any other contaminants present in concentrations above allowable limits. Placement of the monitoring wells and the criteria for their locations will be presented in the work plan prepared for the design and implementation of the selected alternative. Updates of results and progress are provided periodically through community meetings.

There is no evidence to indicate or suspect the presence of organic chemical contaminants in the area where the elevated uranium values occur, based on the sampling information and historic data of the surface water. There also is no evidence to suggest that there are any elevated levels of hazardous substances in the surface water runoff. Therefore, the only chemical of potential concern in the waste pit area is uranium.

Uranium is by far the most prevalent chemical or radioactive material present in the storm water runoff, as evidenced by analyses of surface water, sediment, and ground water in the vicinity of Paddys Run and the storm sewer outfall ditch. Additionally, the potential toxicity and potential radiocarcinogenicity of uranium at its concentrations relative to other materials emitted from the waste pit area, far outweighs contributions from other chemicals or radionuclides.

The pilot treatment plant also will remove to about 20 ppb the uranium that has dissolved into the storm water runoff. The biodenitrification system also will remove by settling some of the uranium that has attached itself to solids.

A more complete discussion of the criteria that must be considered when calculating risk has been added to the revised EE/CA. The process used in the risk assessment for the waste pit area follows U.S. EPA guidelines for human health risk assessment. The separate discussion on risk assessment explains in detail the potential health hazards from exposure to uranium, and it details all the applicable standards that must be considered. Since there is no standard for uranium in drinking water, U.S. DOE is using 30 ppb as the allowable concentration of uranium in drinking water, based on its risk assessment and discussions with U.S. EPA.

SECTION 6

Disposal/Handling of Waste

Comment:

One commenter wanted to know more about the technologies that might be used to solidify the sludge of pits 5 and 6 and whether the removal action should focus on source removal as being consistent with the final remedies being studied for Operable Unit 1. The commenters were interested in more discussion about on-site disposal of the wastes, especially if there were ways to store the wastes in other types of containers, rather than in special containers. A commenter also wondered if there would be any contaminated dust as a result of implementing the alternatives.

Response:

There are several ways to physically stabilize the sludges in the waste pit area. The technologies being reviewed, as indicated in Appendix A of the Operable Unit 1 Task 12 report, initial screening of alternatives, include:

- Dynamic Compaction -- This involves dropping five- to 10-ton weights from heights of 20 to 100 feet, resulting in compaction of surface and subsurface soils. A large capacity crane repeatedly lifts and releases the weight at one location before moving on to the next location.

- Filtration -- This method involves separating solids from a liquid by filtering.

- Flocculation -- This is the coagulation of small suspended solids into larger particles to allow relatively easier separation from the waste water. The process will not affect dissolved solids. Typically, the waste water is treated with chemicals that cause the particles to combine into larger clumps.

- Hydraulic Removal/Dredging -- The technology is generally limited to excavating slurries containing 10 to 20 percent solids by weight. It offers flexibility in pumping the slurry/sediment a considerable distance to a designated treatment or storage area.

- Ion Exchange -- This is a process in which certain dissolved ions are removed from water by exchanging them with other ions in a type of filter.

- Reverse Osmosis -- The technology involves diffusion of water through a semi-permeable membrane with applied pressure. It is a separation process that can retain particles, including dissolved species.

- Shallow Soil Mixing -- This is a method of mixing soils or sludges with dry or fluid treatment chemicals to produce a solidified or stabilized end product. Shallow soil mixing is designed to provide in-situ mixing of ponds, pits, and lagoons to a depth of 30 feet or more using a crane-mounted mixing system.

- Vitrification -- This option calls for adding sand to the sludges, placing electrodes into the pit, and then electrically heating the sand/sludge mixture to form a glass-like monolith.

- Solidification -- A number of different solidification agents are available, including limestone, gypsum, fly ash, and others, which are added to pits or lagoons to reduce liquid volumes.

- Surcharging -- This technology typically involves mounding, or overburdening, the area of treatment with large quantities of fill soil.

- Vacuum Extraction -- This method consists of using equipment to pull water out of a pit or lagoon and then filter and/or treat it.

- Vertical Drains -- There are various types of drains, but the principle is to draw water to the surface, where it can be collected and treated.

In Operable Unit 1, several on-site storage options are being evaluated. In the initial screening of alternatives, one option would be to store the wastes on a stable structural pad in either a below-ground vault or in a reinforced concrete structure above-ground. This type of storage, however, works best with relatively dry wastes placed in non-corrosive containers.

The costs of these alternatives currently are being evaluated.

The recommended alternative is not expected to produce any dust or other contaminated debris that could migrate off-property.

APPENDIX A

Detailed Responses to U.S. and Ohio EPA Comments

COMMENTS ON THE WASTE PIT EE/CA AND DOE RESPONSES

August 1990

United States EPA Comments

GENERAL COMMENTS

Comment 1. Overall, the EE/CA presents several viable alternatives for the removal of contaminated storm water runoff; however, the text lacks sufficient technical information for the sound and defensible selection of an alternative. The selected alternative is not supported by the EE/CA. The selected alternative essentially consists of collecting contaminated storm runoff and discharging it into the Great Miami River with little or no treatment, as stated in Section 5.0, page 17 of 25:

> "As previously cited, only a maximum 10 percent uranium removal efficiency can be expected as a result of settling in the biodenitrification surge lagoon. The degree of uranium removal in subsequent treatment units is unknown. Rather than actually being treated, the uranium is essentially being routed to the Great Miami River without first passing through Paddys Run."

Response DOE concurs that only a small portion of uranium contamination can be treated by the biodenitrification system. Therefore, DOE proposes to install a pilot scale waste water treatment system facility as part of Alternative 4 to demonstrate technologies applicable to the AWWT. The demonstration unit will be designed to treat 10 gpm of wastewater discharged from the Biodenitrification Surge Lagoon (BSL) with an initial concentration of total uranium of 1 ppm to a final effluent concentration of 20 ppb. The facility will be brought on line by the end of the first quarter of 1991 (i.e., March 1991). The EE/CA has been revised accordingly.

Comment 2. The major areas of the EE/CA that require more detailed information include the status and design information of the proposed advanced wastewater treatment (AWWT), status of the National Pollution Discharge Elimination System (NPDES) permit, applicable State and Federal standards and criteria, and design and cost analysis.

Response The Advanced Wastewater Treatment (AWWT) Facility is intended to treat FMPC wastewater discharge to Manhole No. 175 to meet best available technology (BAT) for the removal of radioactivity. DOE Order 5400.5 requires BAT as the required level of treatment for liquid wastes containing radioactive material for streams that contain quantities of radioactivity in excess of this order. The streams targeted for treatment are the general sump, biodenitrification facility, sewage treatment plant, waste pit perimeter area runoff, and Storm Water Retention Basin (SWRB). The FMPC's targeted treatment technologies are ion exchange, or reverse osmosis, or a combination of both--whichever provides BAT treatment. The final design will be based on treatability studies that are presently being conducted. The FMPC has completed bench scale studies which showed that ion exchange and reverse osmosis are capable of removing uranium. The FMPC is in the process of awarding a contract for testing an onsite demonstration unit. This unit shall provide performance data on ion exchange and reverse osmosis.

The FMPC is also moving forward on the design effort for this facility. Presently, the FMPC is conducting Title I design for the AWWT Facility. This facility is scheduled for completion in the first quarter of FY 1994. The AWWT Facility is proposed to treat a total of 1100 gallons per minute (gpm). This treatment flow is comprised of 700 gpm for treatment of the discharge of the SWRB and 400 gpm for treatment of other streams including process wastewater. The waste pit runoff would be handled as part of the process wastewater. The 700 gpm system will most likely contain clarification, filtration, and ion exchange. The 400 gpm system will include all of the equipment of the 700 gpm system with the addition of reverse osmosis. This facility is designed to treat to a level of approximately 20 parts per billion (ppb) of uranium.

The FMPC obtained a new NPDES permit (No. 1I000004*BD) on February 12, 1990. This permit will expire on February 9, 1995.

Comment 3. The EE/CA states that the AWWT facility will be added to the system to increase the uranium removal prior to discharge to the Great Miami River. However, the few and ambiguous statements about the proposed AWWT facility cannot support the selection of this alternative. Additional information needed to evaluate the alternative includes the value of water to be treated, the level of treatment to be attained, and the time unit this treatment facility can be brought on line. Until this facility is operational, it is misleading to refer to the preferred alternative as collection and treatment; it should be considered collection and discharge.

Response See responses to U.S. EPA Comments 1 and 2.

Comment 4. The objective of the removal action is stated in several different ways in the EE/CA. This discrepancy should be clarified. U.S. EPA does not view the purpose of this removal action to be a way of diverting contaminated water into another area.

Response The fundamental objective of the removal action for the storm water runoff control is to protect public health and the environment by controlling the release of storm water runoff with uranium concentrations exceeding the DOE DCG values for surface water discharge of 600 pCi/l for uranium-238 and -235, and 500 pCi/l for uranium-234. Related objectives, founded on other risk-based levels for various potential exposure scenarios, include the protection of biotic environments in Paddys Run and the mitigation of contaminants from surface water to the underlying aquifer. The DOE proposes to install a pilot scale waste water treatment system as part of Alternative 4 to meet these objectives.

Comment 5. The alternative selected in the EE/CA for the south plume also included the discharge of untreated water to the Great Miami River. The current release rates from the FMPC to the Great Miami River exceed the DOE-derived discharge limit by 15 percent. Therefore, selecting another alternative that will only add to the uranium loading in the Great Miami River does not appear to be environmentally sound. In addition, the concentration of uranium in storm water runoff after treatment through biodenitrification surge lagoon will probably exceed the current limit. This assumes that the uranium concentration cited in the EE/CA for untreated storm water runoff (1,700 µg/l) is decreased by the 10 percent stated removal efficiency after treatment (settling of particulates).

Response See response to U.S. EPA Comments 161 and 162.

Comment 6. The EE/CA should also address the potential for exposure to receptors via inhalation and ingestion of contaminated airborne particulates. Although not a specific objective of this removal action, the potential for airborne particulates may have a significant impact on the effectiveness of the various alternatives.

Response Numerous exposure pathways were considered in the exposure assessment in support of the dose and risk assessment results. Most exposure pathways did not contribute significantly to the total exposure of hypothetical receptors. Details of the exposure, dose, and risk assessment were not presented in the May 1990 EE/CA report. The report has been revised to incorporate an appendix, Risk Assessment, that presents models parameters and results of the risk assessment.

Comment 7. The derivation of health risk estimates is not sufficiently developed in the document. Adherence to EPA's Risk Assessment Guidelines for Superfund would reduce much of the ambiguity regarding data preparation and calculation.

Response See response to U.S. EPA Comment 6.

Comment 8. The EE/CA should stand alone for justifying the selection of the best remedy within the time constraints of the need for initiation of the removal action. All assumptions in the EE/CA must be explained and reliance on other documents must be justified and referenced. Copies of referenced materials should be provided with the EE/CA submittal.

Response DOE concurs that the EE/CA should be a stand-alone document, and believes that the Waste Pit Area Storm Water Runoff Control EE/CA is a stand-alone document. The appropriate references are made in the EE/CA.

Comment 9. The National Contingency Plan (NCP) mandates that actions under the Comprehensive Environmental Response, Compensation, and Liability Act (CERCLA) response actions be protective of human health and the environment. In selecting a protective remedy for toxicants, the remedy must not cause any immediate or long term adverse health effects. For carcinogens, the remedy must not cause any excess lifetime cancer risks in excess of 1×10^{-6}. In addition, the remedy must meet Applicable or Relevant and Appropriate Requirements (ARARs) and should consider criteria and policy, such as To Be Considered (TBC) requirements. The EE/CA does not satisfactorily address the protectiveness issue and is required to be revisited. Most of the analysis relies on the derived concentration guides (DCGs) from draft U.S. DOE guidance. The risks must be analyzed in accordance with U.S. EPA guidance including the "Superfund Compliance with Other Laws Manual" and the "Superfund Public Health Evaluation Manual."

Response See response to U.S. EPA Comment 6.

Comment 10. The EE/CA must address the potential for exposure to receptors via inhalation and ingestion of contaminated airborne particulates.

Response See response to U.S. EPA Comment 6.

Comment 11. Lining of the water collection system needs to be further evaluated in the EE/CA.

Response Several of the drainageways will be constructed using precast or cast-in-place concrete trenches. These methods are being used in order to minimize the excavations in confined areas. Several existing drainageways will be used to convey

the collected storm water. These will not be lined with any additional material since they will normally contain flows for only a short period of time (several hours) and will have minimal hydrostatic head. Further consideration is being given to the two detention areas that will pond water for several hours during storm events. These areas are immediately upstream of the two flow control structures. Steps will be taken to ensure that a maximum permeability of 1×10^{-7} cm/sec exists in these areas.

SPECIFIC COMMENTS

Comment 12. Section ES, Page 1, Paragraph 4: The runoff surface areas around the storage silos are also included in this EE/CA.

Response DOE concurs. The description in paragraph 4 of the Executive Summary, however, pertains to Operable Unit 1. The description of areas considered in the Waste Pit EE/CA has been clarified in the text.

Comment 13. Section ES, Page 2, Paragraph 2: The statement concerning sporadic excesses of established concentration guidelines is misleading. This statement indicates that an acceptable standard has been used and that the levels of contamination are only occasionally unacceptable.

Response Most surface water samples from the waste pit area have above-background concentrations of uranium isotopes. Other radionuclides, including technetium-99, radium-226, and radium-228, are found in above-background concentrations in a small fraction of the samples, and in specific locations within the waste pit area. There is not an indication of pervasive contamination of surface water by radionuclides other than uranium within the waste pit area.

Detectable concentrations of several inorganic chemicals have been found in surface water samples from the waste pit area. Most concentrations of inorganic chemicals are less than background concentrations and the remainder are slightly above background at a few locations, which indicates isolated, low-level contamination. Four organic compounds were detected in surface water samples. Each had concentrations just above the detection limits in a small percentage of samples. Since all four are common laboratory contaminations, they are excluded from further consideration, in accordance with recommended practice.

The presence of detectable concentrations of radionuclides (other than uranium) and inorganic chemicals in surface water samples from the waste pit area is not sufficient cause to select these radionuclides and chemicals as chemicals of concern. Their presence indicates that further evaluation is in order. It is also unreasonable to conclude that concentrations of radionuclides and chemicals in surface water from isolated areas of the waste pit area are equal to concentrations of these radionuclides and chemicals in surface water effluents from the waste pit area as a consequence of natural surface water runoff.

Since Paddys Run receives nearly all of the surface water drainage from the waste pit area, measured concentrations of radionuclides and chemicals within Paddys Run are indicative of the radionuclides and chemicals which are being transported from the site. The most comprehensive surface water data for Paddys Run are given in the most recent Environmental Monitoring Annual Reports for the FMPC. These reports clearly indicate that only uranium is being transported from the site via Paddys Run in above-background concentrations. It is with the preceding rationale

that uranium is concluded to be the only chemical of concern for the waste pit area storm water runoff.

Comment 14. Section ES, Page 2, Paragraph 1: Non-time critical removal actions are those which are initiated in response to a release or threat of a release that poses a risk to public health or the environment, such that initiation of the response action may be delayed six months or more following approval of the action memo.

Response DOE concurs. The text has been modified to read "In this case, a planning period of at least six months exists before on-site removal action activities will be initiated; therefore, DOE conducted this engineering evaluation/cost analysis (EE/CA) to analyze removal action alternatives and to support the selection of a preferred alternative."

Comment 15. Section ES, Page 2, Paragraph 3: Further justification for excluding Alternatives 3 and 5 before evaluation must be provided.

Response The reasoning/justification for excluding alternatives 3 and 5 is presented on page ES-4 in the third paragraph.

Alternative 3 was eliminated because there was limited additional benefit derived from the additional Lateral Drainage Sump Collection. This Lateral Drainage Sump Collection is the only difference between Alternatives 3 and 2.

Alternative 5 was eliminated based on the scope of a removal action. The alternative of Source Removal (Alt. 5) would satisfy the objective of the removal action but it would also prejudice the Record of Decision for Operable Unit 1. Since this far exceeds the scope of a removal action, Alternative 5 was eliminated.

Comment 16. Section ES, Page 2, Paragraph 3: The EE/CA states that "the fundamental objective of the removal action is to protect public health and the environment by controlling the release of runoff with uranium concentrations exceeding the proposed U.S. DOE DCGs for surface water discharge." As discussed throughout this letter, the DCGs are not the only criteria with which to select the remedy. Evidence that the DCGs are considered protective under CERCLA is not presented. Additionally, the objective is defined too narrowly.

Response Uranium is by far the most prevalent chemical or radioactive material present in the storm water runoff, as evidenced by analyses of surface water, sediment, and groundwater in the vicinity of Paddys Run and the Storm Sewer Outfall Ditch. Additionally, the potential toxicity and potential radiocarcinogenicity of uranium at its concentrations relative to other materials emitted from the Waste Pit area, far outweighs contributions from other chemicals or radionuclides. The use of the derived concentration guide (DCG) for uranium provides a systematic method for quantitatively addressing radiation dose limits.

The question which arises is whether the DCG for uranium is "protective" of public health.

There is currently no MCL for uranium in community water systems. The MCL for gross alpha particle activity (15 pCi/l) presented in 40CFR141.15(b) specifically excludes uranium and radon. In the absence of an MCL for uranium, an acceptable concentration for uranium in groundwater must be determined in order that the interim remedial action for the waste pits can proceed.

In the process of selecting an acceptable concentration for uranium in groundwater that may be used as a drinking water source, various approaches were considered. A concentration limit of 100 µg/l (76 pCi/l) was recommended by M. E. Wrenn, et. al., in Health Physics, Vol. 48, pp. 601-633 (1985). This limit was recommended to limit toxic effect to the kidney. A concentration limit of 105 µg/l for adults is derived from the reference dose of 3 µg/kg/day for uranium (EPA IRIS computer database).

An acceptable concentration for uranium in groundwater can be derived from radiation risk considerations. In the proposed standards for the control of residual radioactive materials from inactive uranium processing sites, EPA has proposed a concentration limit of 30 pCi/l (45 µg/l) for combined U-234 and U-238 to present the same level of risk as for radium at its MCL of 5 pCi/l (52FR36001 and EPA 520/1-87-014).

Concentration limits based on radiation dose considerations are directly related to concentration limits based on radiation risks. For example, although the concentration limit (MCL) for Ra-226 (5 pCi/l) is based on a risk determination, the annual radiation dose is 4 mrem from ingestion of water having an Ra-226 concentration of 5 pCi/l at a rate of two liters per day for one year. The annual dose equivalent limit of 4 mrem is also the limit from which MCLs for beta particle and photon radioactivity from man-made radionuclides are determined [40CFR141.16(a)]. In accordance with DOE Order 5400.5 (February 8, 1990), acceptable concentrations of radioactive materials in drinking water are derived from the radiation dose limit of 4 mrem per year. There is no exception made in DOE Order 5400.5 for uranium isotopes in drinking water. The concentration guide for uranium in drinking water is calculated to be 22 pCi/l (33 µg/l) (DOE Order 5400.5, Chapter III).

Although the concentration guides for uranium isotopes presented in DOE Order 5400.5 (from which the drinking water limit for uranium is calculated) are rounded to one significant figure, calculation of the acceptable concentration of uranium to more significant figures can be performed by use of the source documents referenced in the Order (e.g., DOE/EH-0071, Internal Dose Conversion Factors for Calculation of Dose to the Public). These calculations give an acceptable uranium concentration of 22.4 pCi/l (33.5 pCi/l). This rounded to 22 pCi/l (33 µg/l).

Use of radiation dose conversion factors other than those presented in DOE/EH-0071 can give a derived concentration limit that differs somewhat from 22 pCi/l (33 µg/l). For example, use of the dose conversion factors from Federal Guidance Report No. 11, EPA-520/1-88-020 (September 1988) gives a derived concentration limit of 20.4 pCi/l (30.6 µg/l). The selected value differs by less than 10 percent and is well within the range of uncertainties of the factors from which the concentrations are calculated.

A proposed concentration for uranium in water which could be used as a drinking water supply is 30 µg/l (20 pCi/l) and is based on an annual radiation dose limit of 4 mrem, an annual ingestion rate of 730 liters, and use of the dose conversion factors from Federal Guidance Report No. 11. This annual dose limit corresponds to an annual radiocarcinogenic risk of approximately 5×10^{-7} and a 70-year lifetime cancer risk of 4×10^{-5}. (Use of alternative risk coefficients give a 70-year lifetime cancer risk of 1×10^{-4}.

Selection of 30 µg/l (20 pCi/l) as the acceptable concentration for uranium in groundwater can be justified in a number of ways. It is derived from a radiation

dose limit (4 mrem/yr) which is consistent with the standards of 40CFR141. More importantly, it presents a radiation risk that is as health-protective as the radium MCL.

Comment 17. Section ES, Page 2, Paragraph 4: Study of the no-action alternative is not required for removal actions.

Response DOE concurs. In accordance with the U.S. EPA draft EE/CA Guidance document, an evaluation of the no-action alternative is not required. However, as with remedial actions, the no-action alternative is presented in this document for base-line comparison purposes.

Comment 18. Section ES, Page 3, Paragraph 4: The EE/CA should specify the mechanism to be used for segregating contaminated from uncontaminated runoff, how DOE will determine what is contaminated, and whether specific sources can be identified.

Response The details asked for in this comment are addressed in Section 4 of the EE/CA, beginning on page 4-5, Alternative 4. These details are not included in the Executive Summary section since this section is only being used to present a brief overview of the alternatives.

Comment 19. Section ES, Page 3: The technical and cost considerations for the synthetic cap, compacted clay cap, and a cap that would meet current requirements of the Resource Conservation and Recovery Act (RCRA) must be presented.

Response DOE concurs. A summary chart has been included in the revised text.

Comment 20. Section ES, Page 4: A brief explanation should be provided to illustrate how capping will better satisfy overall environmental improvement by protecting ". . . the local environments downstream from the waste pit areas and upstream from Paddys Run."

Response DOE concurs. The text has been revised to address this comment. In effect, the statement is made that the drainageways leading to Paddys Run and the drainageways downstream of the waste pit area will be cleansed by uncontaminated runoff water and that contaminated runoff will no longer flow in these channels.

Comment 21. Section ES, Page 4, Paragraph 2: The EE/CA concludes that ". . . only the capping alternative and runoff collection alternative were judged to be effective and implementable as removal actions and to warrant further evaluation in the EE/CA." The increased effectiveness introduced by the lateral drainage collection system in Alternative 3 was not considered sufficient to offset the increased cost and time required for installation. Also while fully effective in meeting the removal action objectives, Alternative 5 far exceeds the scope of the other removal action alternatives and would satisfy the objectives to a comparable extent." The EE/CA provides insufficient support for these conclusions and this subject should further developed, with supporting documentation.

Response For Alternative 3, the 80 percent reduction in contaminant loading to Paddys Run would not be significantly improved for the approximately $1.5 million in expense. For Alternative 5, the approximate cost of $1.1 billion is several hundred orders of magnitude over the cost of other alternatives.

Section 4.3 of the text has been modified to support the screening of these alternatives.

Comment 22. Section ES, Page 5, Paragraph 3: Use of the hypothetically maximum exposed individual is not in accordance with current risk assessment doctrine. A statistically supported, reasonable maximum exposed individual (RME) is the current accepted methodology (Risk Assessment Guidance for Superfund). (See previous comment regarding use of U.S. DOE DCGs.)

Response See response to U.S. EPA Comment 6.

Comment 23. Section ES, Page 5, Paragraph 3: See previous discussion regarding U.S. DOE DCGs.

Response See response to U.S. EPA Comment 16.

Comment 24. Section ES, Page 5, Paragraph 4: A brief explanation should be provided to demonstrate how capping will better satisfy overall environmental improvement by protecting ". . . the local environments downstream from the waste pit area and upstream from Paddys Run."

Response DOE concurs. Additional details have been provided in the revised Executive Summary.

Comment 25. Section ES, Page 5, Paragraph 5: The text states that "the collection and treatment alternative is consistent with the final remedial actions for both the waste pits . . . and the regional environmental media." In order to make this determination, the text should also include the potential final alternatives under consideration.

Response DOE concurs. A listing of the alternatives considered for the final remediation of Operable Units 1 and 5 is presented in Appendix A of the revised report.

Comment 26. Section ES, Page 5, Paragraph 5: CERCLA requires that removal actions contribute to the effective performance of long-term remedial actions to the extent practicable. This is only one of the factors required to be considered with respect to implementability. U.S. EPA's EE/CA guidance should be consulted. The alternative will not meet the removal requirement "to abate . . . a release or threat of release."

Response DOE concurs. The text regarding the capping alternative has been modified accordingly.

Comment 27. Section ES, Page 6: CERCLA provides for permit waivers for on-site activities, as long as substantive requirements of a permit are met. The site definition is defined by CERCLA and the 1990 Consent Agreement.

Response DOE concurs. The text has been modified accordingly. Also see response to U.S. EPA Comment 156.

Comment 28. Section ES, Pages 6-7, Table ES-1: Please elaborate on the variety of special conditions that may require special considerations as stated under Alternatives 2 and 4, Implementability: Technical Feasibility.

Response Details of special considerations are addressed in Sections 5.3.6 and 5.4.6.

Comment 29. Section ES, Pages 6-7, Table ES-1: Under Alternative 2, Public Health Effectiveness, the table states that ". . . all exposure pathways within acceptable risk

limits." The concept of acceptability, however, is not defined in the Executive Summary.

Response The "acceptable risk limits" referred to in Table ES-1 are, in accordance with the NCP, those calculated risk in the range of 10^{-4} to 10^{-6}. The use of a range is consistent with EPA practices, in that it affords the lead agency the flexibility to take into account different situations, different kings of threats, and different kinds of technical remedies.

Comment 30. Section ES, Page 8, Paragraph: The collection and treatment alternative will not mitigate the waste infiltration through the sides and bottoms of the waste pits.

Response The scope of this removal action is defined on page ES-2 as "management of radioactively contaminated storm water runoff from the waste pit area." Any water that penetrates the surface of the pit is no longer runoff and will be addressed as part of the overall Operable Unit 1 remediation.

Comment 31. Section ES, Page 8, Paragraph 6: The capping alternative will mitigate contaminant infiltration and transport, but would keep runoff from contacting the wastes. The collection and treatment alternative will do neither.

Response The statement made is true, however, several other factors must be considered.

First, implementation of the capping alternative would prejudice the final remediation of Operable Unit 1. By implementing a capping removal action the final Record of Decision for Operable Unit 1 would either have to include capping as the final action or deal with the additional wastes that would be created by the capping activities.

Second, any work that will be done on or around the waste pits will require the implementation of runoff control actions. This is not only necessary for work in hazardous areas, but it is required for standard construction projects involving earth work. Therefore, storm water runoff control of the waste pits and a perimeter area surrounding them should be the first step in any remediation effort having to do with the Operable Unit 1 subunits.

Comment 32. Section 1.0, Page 1, Paragraph 4: The NCP was finalized in March 1990; change April 1988 to April 1990 (55 Federal Register 8666).

Response DOE concurs. The NCP was finalized in April 1990. All references to the NCP in the text have been revised to reflect the April 1990 date.

Comment 33. Section 1, Page 2: The integration of National Environmental Policy Act (NEPA) requirements needs to be justified and explained.

Response DOE concurs. An expanded discussion of NEPA integration has been included in the text.

Comment 34. Section 2.0: No topographic map of the waste pit area is included in this section. Therefore, it is difficult to fully evaluate the design changes discussed in this document. A topographic map of the waste pit area drawn to scale should be included. This is needed to provide the information necessary to properly evaluate the design changes that may be needed.

Response A preliminary engineering drawing from the Waste Pit Area Storm Water Runoff Control Project has been included in the revised report.

Comment 35. Section 2.1, Page 3: The discussion of the individual waste pits should include a figure showing the location of the 6 waste pits, the burn pit, and the Clearwell. Figure 2-2 is inadequate for this purpose.

Response DOE concurs. Figure 2-5 has been provided in the revised report.

Comment 36. Section 2.1, Page 3: The discussion regarding the construction of the individual waste pits does not indicate that the native clay that comprises the bottom of these basins is not an engineered clay designed to permanently contain waste materials. The text should indicate the permeability characteristics of each pit description.

Response The text has been changed to describe that the liners were comprised of native clay. However, permeability characteristics of these nonengineered liners is not known at this time.

Comment 37. Section 2.0, page 5, Paragraph 4: A full chemical analysis of the soil and waste materials in the bottom of the burn pit would seem appropriate, based on this pit's functional history.

Response While DOE concurs that a full chemical analysis of the burn pit area is beneficial, the purpose of this EE/CA is to provide a removal action for storm water runoff. The burn pit area will be addressed in the RI/FS.

Comment 38. Section 2.0, Page 6, Paragraph 1: The statement that ". . . water of varying depth remains in the Clearwell at all times . . ." is confusing. The amount of discharge to and from the Clearwell needs to be presented.

Response Page 6 states the drainage areas that flow to the Clearwell. The statement regarding the varying amounts of water in the Clearwell has been changed to read as follows:

> Water of varying depth remains in the Clearwell at all times depending on recent precipitation amounts.

Based on 41 inches of rainfall/year, the annual volume of runoff to the Clearwell from the majority of the surface area of Pits 1, 2, 3, and the entire surface of Pit 5 and the Clearwell itself is approximately 50,000 gallons. Evaporation from the surface of Pit 5 and the Clearwell is approximately 11,000 gallons/year.

Comment 39. Section 2.1, Page 6, Paragraph 2: The report should also note that the static water level in wells completed in the till indicated that the potential for groundwater movement is southwest towards Paddys Run. Therefore leachate can enter Paddys Run by seeps and shallow groundwater discharge. Leachate can also enter the Great Miami aquifer by vertical movement through the till and infiltration of surface water from Paddys Run to the aquifer.

Response The Waste Pit EE/CA is a removal action that considers only surface pathways to Paddys Run as the source of contaminant loading and subsequent recharge to the Great Miami Aquifer. Groundwater pathways are not specifically addressed in the EE/CA, but are addressed as part of Operable Unit 1, Waste Pits, and Operable Unit 5, Environmental Media.

Comment 40. Section 2.1, Page 6, Paragraph 4: The statement that storm runoff during major storm events may be discharged to Paddys Run implies that this discharge is not tested prior to release, a violation of the NPDES requirements.

Response The storm water retention basin overflow is an NPDES permitted discharge point (outfall 1I000004002) and is being monitored in accordance with the NPDES permit.

Comment 41. Section 2.1, Page 6, Paragraph 5: The first sentence indicates that storm water discharge from the Clearwell is regulated by an NPDES permit. However, the last paragraph on the previous page, states that NPDES-permitted discharge from the Clearwell was terminated. The status of discharge permits pertaining to the Clearwell should be clarified.

Response The statements made in the text are correct.

Under the 1980 FMPC NPDES permit, the Clearwell was the NPDES monitoring point for FMPC process waters discharged to Manhole 175. Process waste waters are no longer discharged to the Clearwell. Under the FMPC NPDES permit issued on February 12, 1990, the Clearwell is an NPDES monitoring point until such time as the Biodenitrification System and its Effluent Treatment System become operational. At that time, the Clearwell will be pumped to the Biodenitrification Surge Lagoon and will be monitored as part of the Biodenitrification System discharge to Manhole 175.

A copy of the NPDES Permit is Attached.

Comment 42. Section 2.1, Page 6, Paragraph 5: An appendix including the NPDES permit requirements for the facility would be appropriate.

Response A copy of the NPDES Permit is attached.

Comment 43. Section 2.1, Page 6, Paragraph 5: It is not clear whether the phase "under one removal action" refers to the alternatives evaluated in this EE/CA or an EE/CA for another removal action at the site.

Response DOE concurs. The wording of the first sentence has been changed to read as follows:

> "The main effluent...for waste pit area storm water runoff under one of the removal action alternatives presented in this EE/CA."

Comment 44. Section 2.1, Page 6, Paragraph 5: Pit 5, which discharges water to the Clearwell, contains RCRA hazardous waste. Thus, the discharge (may [DOE believes this word should be deleted]) from Pit 5 to the Clearwell is not regulated under NPDES.

Response Although the comment is unclear, pit 5 has not been determined to be a hazardous waste management unit. FMPC is evaluating whether Pit 5 is a hazardous waste management unit. Since storm water from Pit 5 goes directly to the Clearwell, its regulatory status does not effect the conclusion of this EE/CA. Also see response to U.S. EPA Comment 104.

Comment 45. Section 2.1, Page 6, Paragraph 5: Although this pipeline was designed for pressure flow, the design was inadequate to handle the high river stage in the summer of 1989, resulting in the release of contaminated water at manhole 180. The EE/CA should indicate whether this discharge pipeline will be retrofitted.

Response The statement that the "design was inadequate to handle the high river stage in the summer of 1989, resulting in the release of contaminated water at manhole 180" is incorrect.

The design of the pressure sections of the FMPC outfall line can adequately handle the pressures that would be experienced in the outfall line during an elevated river stage. The failure of Manhole 180 that occurred on May 3, 1989, was due to a lack of proper maintenance on the bolted connection of the manhole lid to the manhole ring. The original design included a rubber gasket between the lid and the ring. This gasket was no longer in place when the overflow occurred. New manhole rings and lids were installed in May 1989 to insure pressure tight seals.

Comment 46. Section 2.1, Page 6, Paragraph 5: The design of the discharged pipeline (see south plume EE/CA) is not adequate to handle 10 cubic feet per second (cfs). The minimum slope required to hold 10 cfs under gravity flow is approximately 2 percent.

Response The average slope from Manhole 177 to the Great Miami River is 1.55 percent. This slope provides for a flow capability of 4400 gpm (9.8 cfs).

The Waste Pit Area Storm Water Runoff Control Project will only contribute 23 gallons per minute to Manhole 175 based on an average annual rainfall of 41 inches. This flow is negligible when compared to the normal flow in the outfall line.

Comment 47. Section 2.2, Page 7, Paragraph 2: The report should note that 660 pCi/l exceeds the U.S. DOE DCG limit of 550 pCi/l for total uranium by 20 percent.

Response The DCG for uranium in natural isotopic proportions is 550 pCi/l as determined from DOE Order 5400.5. "Depleted" uranium (having less than the natural isotopic proportion of U-235 and of U-234) is the prevalent type of uranium in the waste pit area. This is known from waste disposal records and from sampling results for the pits. Surface water samples from the pit area also indicate that the uranium contamination in surface water is "depleted."

The DCG for depleted uranium calculated from DOE Order 5400.5 is between 550 pCi/l and 600 pCi/l. Nevertheless, for the purposes of this EE/CA, a DCG of 550 pCi/l is used for uranium in water.

The text will be changed to reflect that the uranium concentration of 660 pCi/l exceeds the DCG.

Comment 48. Section 2.2, Page 7, Paragraph 2: The range of concentrations of uranium, as well as the average concentrations, should be referenced.

Response These data are contained in the Annual Monitoring Report, that was referenced in the EE/CA. The data have been summarized and placed in Appendix B.

Comment 49. Section 2.2, Page 7, Paragraph 2: It is not clear what U.S. DOE orders are being referred to in this Section. Since U.S. DOE orders required daily sampling of radionuclides, summary information on the radionuclides other than uranium should be presented in the EE/CA. The range and detection limits should also be specified.

Response Orders refer to DOE Order 5400.5. Summary tables of radionuclides (including uranium) are presented in the Appendices.

Comment 50. Section 2.2, Page 7, Paragraphs 3-4: The EE/CA should indicate the current status of the proposed advanced wastewater treatment (AWWT) facility and when it will be operational.

Response The current status of the AWWT facility is in the Title I Design (30 percent design) phase. The current projected start-up date is October 1993.

Comment 51. Section 2.2.1, Page 8, Paragraph 3: The one-year and ten-year 24-hour rainfall data should also be included.

Response DOE concurs. The one-year, 24-hour rainfall is 2.5 inches. The ten-year, 24-hour rainfall is 4.1 inches. The text has been revised accordingly.

Comment 52. Section 2.1, Page 8, Paragraph 4: Indicate whether the entire waste pit area is above the 100-year floodplain as described on Federal Emergency Management Administration (FEMA) maps and by the Corps of Engineers. Also indicate whether the diking engineered controls on this side of the facility were constructed to prevent flood level waters from entering the ancestral stream bed and thus undercutting the waste pits or increasing the contaminant load potential to the stream.

Response The waste pit area is outside of the 100-year flood plain as described on FEMA maps. The waste pit area is outside of this flood plain because of the diking placed west of Pit 3. It is believed that this engineered diking was installed to fulfill dual purposes. The primary purpose was to prevent elevated water levels in Paddys Run from eroding the west berm of Pit 3. The other purpose was to provide a secondary containment in the event of a catastrophic failure of one of the bermed waste pits (i.e., Pits 3 or 5).

Comment 53. Section 2.2.2, Page 9, Paragraph 1: It is not clear how the discharge for Paddys Run was calculated, since the text states that it is an ungauged, intermittent stream. The discharge data should be referenced.

Response The estimated discharge rates are from a U.S. DOE study conducted in July 1985. The document from this study is called the "Department of Energy Feed Material Production Center Groundwater Study Task C Report," White Plains, New York.

Comment 54. Section 2.2.2, Page 9, Paragraph 2: A figure is needed showing the location of the Storm Sewer Outfall Ditch and Manhole 175.

Response A revised figure is provided in the text showing the location of the Storm Sewer Outfall Ditch and Manhole 175.

Comment 55. Section 2.2.2, Page 9, Paragraphs 2-3: Retention basins may eliminate storm water runoff to the outfall ditch and Paddys Run; however, uranium contamination is not removed by settling. This storm water runoff is still contributing uranium contamination to the Great Miami River.

Response Some of the uranium is removed through settling of the solids in the storm water retention basins. These retention basins also allow the storm water to be diverted from the Storm Sewer Outfall Ditch and Paddys Run, which are believed to be direct conduits to the aquifer. Additionally, the centralized collection of these

waters will prove a great advantage in potential future treatment of the collected waters. Additional uranium will also be removed by the 10 gpm demonstration waste water treatment system. However, the storm water runoff will continue to contribute uranium to the Great Miami River.

Comment 56. Section 2.2.3, Page 10, Paragraph 2: A figure illustrating how the cone of depression affect groundwater flow should be presented.

Response Surface water, not groundwater, is the issue of concern in the EE/CA. A figure that shows the effect on groundwater flow in the vicinity of the FMPC, that is caused by SOWC pumping at the Big Bend area is not considered an essential item to this removal action.

Comment 57. Section 2.2.5, Page 13, Paragraph 4: The RI work being conducted for Operable Unit 5 should use the methods established in the "Biocriteria User's Manual." Ohio Water Quality Standards have biocriteria based on fish and invertebrate communities. For fish, the data collected should be evaluated using the Index of Biotic Integrity (IBI), which has been calibrated for Ohio streams. For invertebrates, the data collected should be evaluated using the Invertebrate Community Index (ICI). An invertebrate voucher collection must be established and verified by either U.S. EPA and OEPA. The study should also evaluate sediment toxicity.

Response The toxic effects of FMPC effluent on fish are being evaluated using standard U.S. EPA laboratory methods for the fathead minnow, not natural populations. During preparation of the Operable Unit 5 RI, OEPA guidance will be requested on the Biocriteria User's Manual, the Invertebrate Community Index, and the establishment of an invertebrate voucher collection. Toxicity of soils and sediments on the FMPC is being examined under the RI/FS. The text has been revised.

Comment 58. Section 2.2.6, Page 13, Paragraph 2: Hamilton is a city (not a town) with a population of approximately 60,000. Furthermore, a significant portion of the city of Fairfield (population 40,000) is located within 5 to 6 miles of the FMPC. The estimated population surrounding the plant is based on a 5-mile radius from the center of the facility. However, a recent court ruling indicated that the 5-mile radius should be measured from the site boundaries. Thus the estimated population within a 5-mile radius of the site is currently considered to be 30,000.

Response According to "Estimates of the Population and Per Capita Income for Incorporated Places and Subcounty Areas in Ohio 1980 to 1988" (Ohio Data Users Center, December, 1989), Hamilton is a city with a population of 65,500 in 1988 and the city of Fairfield located approximately 6 miles northeast of the FMPC, had a population of 36,200. This information has been clarified in the text.

Comment 59. Section 2.3.1, Page 14, Paragraph 3: Based on Figure 2-4, surface water or surface soil samples were not collected in the drainage areas east of the waste pits but still within the K-65 waste pit area (i.e., Drainage Areas A and other undefined areas). None of these areas are considered in any of the alternatives and the report implies this surface water will discharge to Paddys Run. Because this area has not been investigated and these areas may be contributing to contaminated storm water runoff, additional sampling should be conducted.

Response Data has been added to Table 2-1 and Figure 2-4 for three storm water runoff sample points in Area A. The data support the decision to route runoff directly from this area into Paddys Run. Diversion of drainage from Areas H and I in October 1988 caused an 83 percent average reduction of total uranium in samples

from Sample Point 28, an 81 percent reduction at Sample Point 24, and a 46 percent reduction at Sample Point 22. Eliminating inflow from surrounding highly contaminated areas as specified in Section 4.2.4 is expected to reduce total uranium values still further. As current total uranium values are already low at the downstream Sample Point (24), Area A contains no known sources. Allowing runoff to Paddys Run via the unnamed tributary is an acceptable part of the proposed interim remedy. Area A will be sampled in more detail and a permanent remedy proposed on that basis in Operable Unit 1 and/or Operable Unit 5 RI/FS.

Comment 60. Section 2.3.1, Page 14, Paragraph 4: Twelve Sampling locations are identified as being within the waste pit area. Table 2-1 (Westinghouse Data for Surface Water Runoff) shows results for only 11 sample locations. The data for location #12 is missing from Table 2-1, when compared to Figure 2-4 (Storm Water Runoff Sample Locations).

Response DOE concurs. This sample location has been added to the revised Table 2-1.

Comment 61. Section 2.3.1, Page 14, Paragraph 4: A discussion of detection limits and the meaning of the asterisk should be added to the footnotes in Table 2-2.

Response The meaning of the asterisk was present on Table 2-2, but in response to comment, the definition was made clearer.

Comment 62. Section 2.3, Page 15: If Westinghouse analyzed samples for contaminants other than uranium, these should be included in Table 2-1.

Response The only other data reported was isotropic uranium Total Suspended Solids (TSS). Concentrations of TSS were analyzed on seven sample points (2, 5, 7, 8, 16, 25, 26) taken on March 21, 1989. The additional constituents were measured but not reported in the document since no conclusions can be drawn from the data.

Comment 63. Figure 2-4, Page 15: This figure is cluttered and difficult to read. The legend is incomplete, and no reference is provided. In addition, it is difficult to read and uses an unusual scale for an engineering drawing. Contour lines should be superimposed to show natural drainage patterns. It does not contain the ASI/IT sample location for ASIT-001. Two separate figures are recommended.

Response The Figure 2-4 will be revised to make it less confusing. Sample location ASIT-001 will be added, along with additions to the legend. The reference to the comment addresses (as to how this figure was generated) is indicated in Note 3. All references for the data points are located on respective Tables 2-1 through 2-4. A separate figure will be provided to show the contour lines.

Comment 64. Figure 2-4, Page 15: This figure indicates that surface water or surface soils samples were not collected in the drainage areas east of the waste pits but still within the K-65 and waste pit area (i.e., drainage areas A and other undefined areas). None of these areas are considered in any of the alternatives. These areas need to be investigated because of the potential for them to be contributing to contaminated storm water runoff. The associated text should be modified and additional sampling proposed.

Response See response to U.S. EPA Comment 59.

Comment 65. Section 2, Pages 16-20: The sources of all data in Tables 2-1 through 2-4 should be properly cited in the Reference Section. Abbreviations in the tables (TOC, TOX, etc.) should be defined in the footnotes.

Response DOE concurs. The tables and the reference list have been revised to include the requested information. Tables 2-1 and 2-4, however, were not revised.

Comment 66. Table 2-1, Page 16: At certain sample locations, uranium concentrations vary considerably over time. For example concentrations at location 27 range from 0.454 to 11.30 mg/l. The possible causes for this variability and the representativeness and comparability of the ASI/IT data should be discussed.

Response The possible reasons as to why the concentrations vary over time is provided in the revised text.

Comment 67. Section 2.3.1, Page 21, Paragraph 4: This paragraph is redundant. Additionally, the difference between minimum detection limit and the method detection limit should be specified.

Response Paragraph 4 of Section 2.3.1 does not appear to be redundant. Text will not be changed unless a resulting comment can specifically indicate what is redundant. Definition of minimum detection limit and method detection limit has been included in the text.

Comment 68. Section 2.3.1, Page 21, Paragraph 3: Sample locations are shown on Figure 2-4, not on Figure 2-2.

Response DOE concurs. The corresponding text has been revised.

Comment 69. Section 2.3.2, Pages 21-27: For easier reference, it would be helpful to give sample numbers in the text.

Response The sample locations are now provided in the text. In the case of sample numbers, ASI/IT data were the only data that provided sample numbers and these were noted along with the sample location points. The sample locations are provided consistently when referring to high concentrations of a parameter. These locations provide adequate "help" in referring from the text to the tables and to Figure 2-4. For those ASI/IT sample locations where the sample number was not provided, the text has been revised to include sample number (except in the Summary).

Comment 70. Section 2.3.2.1, Pages 20-24: The analytical results presented in this section must include the range of concentrations detected; the location of the highest concentrations; and any applicable limits including Safe Drinking Water Standards, Water Quality Standards, and NPDES permit requirements for each contaminant. It should be stated whether samples were analyzed for radon.

Response The samples were not analyzed for radon. Surface water is not customarily analyzed for radon for a number of reasons. Primarily, since the half-life of radon is relatively short, and since the method of radon incorporation into water is very inefficient for surface water (as compared to groundwater), analysis of surface water for radon does not provide useful information relative to contaminant migration or to human exposures.

Sampling locations are shown in Figure 2-6 for sampling data given in Tables 2-1 through 2-4.

The "applicable limits" for the data are reflected in the NPDES permit for the FMPC. Comparison of this data to the applicable limits of the Safe Drinking Water Standards, Water Quality Standards, and the limits of the NPDES permit does not contribute to this EE/CA evaluation.

Comment 71. Section 2.3.2.1, Page 22, First paragraph: The use of the word "slightly" is inappropriate.

Response DOE concurs. The word "slightly" was removed from the paragraph when it referred to exceeding the MCL for chromium.

Comment 72. Section 2.3.2.1, Page 22: MCLs are not appropriate guidelines for comparison with runoff concentrations. Ambient Water Quality Criteria would be more suitable. If a specific exposure pathway is to be addressed, use a health-based number or a risk-derived concentration. Refer to Risk Assessment Guidance for Superfund for specific information.

Response See response to U.S. EPA Comments 6 and 16.

Comment 73. Section 2.3.2.2, Page 22, Paragraph 1: TOX and TOC are analytical screening analyses. TOC values were reported to be 188 mg/l (188 ppm). Follow-up analysis should have been performed to further characterize the component organics reported in the TOC test.

Response Organic compounds are not considered contaminants of major concern for this removal action. Aside from the one sample point (DD-07) with unusually high values, TOC values range from 7.6 to 16.6 mg/l and TOX values range from 15 to 43 µg/l. In any event, residence time in the Biodenitrification Surge Lagoon will allow these compounds to be broken down by biological activity.

Comment 74. Section 2.3.2.2, Page 22: The highest daily average concentrations detected for the four samples locations should be presented.

Response The highest concentration of TSS is presented in the text as 2150 mg/l at Sample Location DD-14. A daily average concentration for each of the four sample locations can not be provided since only <u>one</u> concentration is given for each sample location.

Comment 75. Section 2.3.2.3, Page 23, Paragraph 2: The word "somewhat" is not appropriate.

Response DOE concurs. The word "somewhat" was removed from the second paragraph on page 22 when it referred to exceeding the standard for sulfate.

Comment 76. Section 2.3.2.3, Page 24: The conversions for pCi/l to ppm needs to be presented.

Response DOE concurs. The conversion factors have been provided in the text. Also see response to U.S. EPA Comment 82.

Comment 77. Section 2.3.2.3, Pages 23-25: Section 2.3.2.3 (radionuclides and Gross Radioactivity) discusses guidelines in terms of exposure to radioactivity. However, these compounds are also chemically toxic. This section should compare contaminant levels to nonradioactive toxicity guidelines.

Response See response to U.S. EPA Comment 6.

Comment 78. Section 2.3.2.3, Page 23, Paragraph 6: The discussion of DCGs should either be expanded in this section or included as an appendix. This should include assumptions concerning exposure parameters, the calculations used to derive DCGs, and the basis for the DCG in terms of health risk. In addition, DCGs are not the sole criteria for setting appropriate site cleanup standards.

Response See response to U.S. EPA Comment 16.

Comment 79. Section 2.3.2.3, Pages 24-25: In comparing DCGs for various uranium species with reported sampling results, only two of the four data sets (Weston and ASI/IT) are mentioned. The data from Dames & Moore and Westinghouse, which are presented in units of mg/l, are not compared with DCGs, which are in units of pCi/l. If it is assumed that one pCi of total uranium is equivalent to 1.5 µg (as indicated in the South Plume EE/CA), and that the DCG for total uranium is approximately 550 pCi/l, then any level exceeding 825 µg/l would violate the DCG standard. Given these assumptions, the data from Dames & Moore (Table 2-4) and Westinghouse (Table 2-1) clearly indicate that the level of contamination is more extensive than this section implies. This section would be clearer if the data were presented in comparable units. The discussion of exceedances of DCGs considers only the analytical data specifically for isotopic uranium and does not consider a DCG or an "effective DCG" for total uranium.

Response See responses to U.S. EPA Comment 47. The text has been revised to have consistency of the units and, where appropriate, will list <u>both</u> activity concentrations and area concentrations for uranium. Preliminary evaluation of the two data groups (Weston - ASI/IT and Dames & Moore - Westinghouse) do not suggest that the level of contamination indicated by the two groups of data are significantly different.

Comment 80. Section 2.3.2.3, Pages 24-25: Again, U.S. DOE DCGs are TBCs only, but the establishment of different derived concentration levels for removal actions versus final remediation must be justified. As presented here, DOE is using a 100 mrem/year exposure scenario for a project pathway of runoff water used as a drinking water source, whereas a 50-year CEDE 4-mrem/year value was used for the South Plume groundwater. This is inconsistent with U.S. DOE 5400.5, which states that the CEDE limits shall apply to all off-site areas where water could be used as a drinking water source. It is reported in the EE/CA (page 2-27) that the potential for contaminated drinking water supplies is relevant to this removal action. Therefore, the appropriate DCG should be 22 pCi/l rather that 550 pCi/l.

Response See response to U.S. EPA Comment 6. Storm water runoff from the Waste Pit Area via Paddys Run is not used directly as a drinking water supply. The DCG for uranium in the water is 550 pCi/l and yields a radiation dose of 100 mrem per year from ingestion of 730 liters per year. Surface water from Paddys' Run can go into the regional aquifer and the Great Miami River, thereby contributing uranium contamination to those water supplies which may be used as drinking water supplies. The DCG for uranium in the regional aquifer and the Great Miami River (outside the mixing zone) is therefore 22 pCi/l (yielding a radiation dose of 4 mrem per year from ingestion of 730 liters per year).

Comment 81. Section 2.3.2.3, Page 24, Paragraph 1: Dose equivalents should also be expressed as excess cancer risks, as suggested in the Risk Assessment Guidelines for Superfund. By consistently referring to U.S. DOE DCGs, the environmental

effectiveness of alternatives (as defined by CERCLA in the NCP) is difficult to evaluate.

Response See response to U.S. EPA Comment 6.

Comment 82. Section 2.3.2.3, Pages 23-26: Units (mg/l, pCi/l, and µg/l) are not used consistently. The factor for converting between mg/l and pCi/l should be included in the text or an appendix.

Response The units of concentration presented in the text are consistent with the units for the parameters in the tables and with the data collected by DOE and presented by each contractor. Please note that each contractor expressed results of concentrations (for each parameter) in the same units. The data is also presented in the sample concentrations in which the parameters are usually presented. The radioisotopes, gross alpha, and gross beta are presented in pCi/l and total uranium in mg/l or µg/l (here presented in mg/l). Conversion factors are stated below and are included in text.

0.67 pCi/µg or 1.49 µg/pCi
1.0 g/l = 1000 mg/l = 1,000,000 µg/l
1.0 mg/l = 1000 µg/l

Comment 83. Section 2.3.2.3, Page 25, Paragraph 2: The statement that ". . . the remaining ASI/IT samples ranged from 18 pCi/l to 365 pCi/l . . ." is misleading; only 8 of 13 samples were analyzed for Uranium 238. Furthermore, considering the relationship between total uranium concentration (in mg/l) and the activity concentration of Uranium 238 (in pCi/l), samples ASI/IT 27 and 28 would also exceed the DCG.

Response The text has been revised to indicate the number of samples analyzed for each parameter, as appropriate.

Comment 84 Section 2.3.2.3, Page 25, Paragraph 4: The EE/CA should also note that all the ASI/IT samples for gross alpha exceed the U.S. EPA Interim Drinking Water Standard.

Response Surface water within the Waste Pit Area and storm water runoff from the Waste Pit Area are not used directly as a drinking water supply. Therefore, comparison of concentrations of gross alpha particle activity and gross beta particle activity in these waters with concentration standards for drinking water is inappropriate. Water from these areas can go into, and contribute contamination to, the regional aquifer or the Great Miami River.

Potential radiation doses and risks from transport pathways via storm water runoff via Paddys Run into the regional aquifer and the Great Miami River are presented in Appendix C, Risk Assessment.

Comment 85. Section 2.3.3, Page 26, Paragraph 1: Sample location DD-07 is cited as having the highest concentration of gross alpha and gross beta. However, the last sentence of this paragraph does not clearly indicate whether the source of this contamination is the waste pit area.

Response Weston Sample Location DD07 was mislocated on Figure 2-4 and is approximately 100 feet to the east in the drainageway adjacent to pit 3. The most likely source of contamination is therefore, the waste pits. The figure has been corrected.

Comment 86. Section 2.3.3, Page 26, Paragraph 1: Sample location DD-07 is in the proximity of the waste pit area. While current drainage patterns may not indicate a connection, former patterns during pit construction and grading operations could have contributed waste materials directly to this area. Also seepage laterally may be contributing to contamination in this area. The 1988 EPA-EPIC report documents the ancestral drainage patterns and should be used to evaluate historical waste pockets. The sample map as presented is useless for determining flow gradients and drainage pathways.

Response See response to U.S. EPA Comment 85.

Comment 87. Section 2.3.3, Page 27, Paragraph 3: Rather than referring to Factors 1 and 2 as "secondary" justifications, it appears that they should be listed before Factors 4 and 5 since an actual release rather than a "threat of release" (Factor 4) has occurred.

Response The text has been revised to list Factors 1 and 2 as primary and 4 and 5 as "secondary."

Comment 88. Section 2.3.3, Page 26, Paragraph 1: The text refers to "natural drainage," but there are no topographic figures in the report that allow confirmation of drainage patterns.

Response A topographic figure is included in the revision.

Comment 89. Section 2.4.2, Page 28, Paragraph 3: Under "environmental fate" the text should mention the length of time that the radioactive contaminants at the site remain hazardous. To put risks into perspective, data on half-lives of uranium and thorium isotopes should be included in this section. In addition, the specific properties of uranium (the contaminant of concern) should be discussed.

Response Uranium and Thorium (U-238, Th-232) are primordial radionuclides, having been created when the earth was formed. Therefore, their half-lives are billions of years. The properties of uranium are addressed in the toxicity assessment section of the Risk Assessment in the revised report.

Comment 90. Section 2.4.3.1, Page 29, Paragraph 1: The text states that "all considered actions that account for public health and environmental protection will also provide protection against other radionuclides and chemicals, due to the low levels present." Although this statement is likely true given the quantities of wastes disposed in this operable unit, the text should provide some numerical comparison of these relative risks. The conclusion will be better supported, if for example, this comparison shows that the risks posed by uranium isotopes at the site far exceed (by several orders of magnitude or more) those posed by all other materials. Data must be presented to support these conclusions.

Response See response to U.S. EPA Comments 6 and 16.

Comment 91. Section 2.4.3.1, Page 29, Paragraph 1: The statement that most radionuclides are at natural background levels is misleading. The text should indicate how normal background levels were established and what sampling locations were used.

Response Establishing the normal background level of uranium is not considered essential for the purpose of the revised EE/CA since the acceptable uranium concentration is now derived from radiation risk considerations. Accordingly, the statement that "most of the radionuclides are found at natural background concentration" has been deleted from the revised text.

Comment 92. Section 2.4.3.1, Page 29, Paragraph 2: Insoluble forms of uranium can also adsorb to clay or colloidal size particles and be ingested.

Response Comment is not understood. If referring to ingestion of uranium, these factors are considered in the pathways analysis within the Risk Assessment (Appendix C) of the revised report.

Comment 93. Section 2.4.3.2, Page 29, Paragraph 1: Ingestion of groundwater underlying Paddys Run is a current exposure pathway, not a potential exposure pathway. The discussion of exposure pathways needs to consider inhalation of radon and its decay products that can be attributed to the waste pits.

Response See response to U.S. EPA Comment 6.

Comment 94. Section 2.4.3.2, Page 29, Paragraph 1: The pathway discussion does not address environmental receptors such as indigenous plant and animal life in Paddys Run. Further, recreational use of Paddys run and the Miami River, the contamination of sediments, and the additional receptors from these pathways are not addressed.

Response DOE concurs. The revised EE/CA addresses environmental receptors in Sections 5.2.2, 5.3.2, and 5.4.2.

Comment 95. Section 2.4.3.3, Page 30: EE/CA should present information on the uses of groundwater downgradient from the site.

Response The information on the requested groundwater use was addressed in the South Plume EE/CA; it has been reiterated in the Waste Pit EE/CA.

Comment 96. Section 2.4.3.2, Page 30, Continuing Paragraph: The statement that ". . . current releases . . . do not constitute an unacceptable level of risk . . ." is not defined in terms of what is acceptable and what is not. Whether a release is within U.S. DOE guidelines should not be construed as the sole criteria for acceptability.

Response See response to U.S. EPA Comments 6 and 29.

Comment 97. Section 2.4.3.2, Page 30, Paragraph 1: The statement that ". . . there is no known use of groundwater for drinking water . . ." is misleading. Previous documents state that one of the sources of contamination to the south plume groundwater operable unit is infiltration of surface water from Paddys Run. Groundwater users in this area now do not use the water because of the contamination.

Response DOE concurs. The information on the requested groundwater use was addressed in the South Plume EE/CA; it has been reiterated in the Waste Pit EE/CA.

Comment 98. Section 3.0, Page 1, Paragraph 1: Although not a principal objective, the elimination of potential release of contaminated airborne particulates should be investigated. Fugitive dust emissions can affect a large area and several receptors over a relatively short period of time.

Response DOE agrees that fugitive emissions of contaminated dust must be controlled, but believes that no revision of the draft report is necessary. Specific methods of control will depend largely on the alternative chosen, and could include precautions such as selective excavation (Section 4.2.2., first paragraph) and worker protection (Section 5.1.1., fifth paragraph). Regardless of the alternative chosen, fugitive dust

control will be a necessary consideration, as indicated in the Table 5-2 listing of ARARs and TBCs.

Comment 99. Section 3.0, Page 1, Paragraph 1: The objective is to control storm water runoff from the waste pit area.

Response DOE believes the objectives stated in the Executive Summary and Section 3.0 more accurately describe the objectives than EPA Comment 99.

Comment 100. Section 3.0, Page 1, Paragraph 3: Runoff from the Plant 1 drum storage pad contributes contaminants to both Paddys Run and the Great Miami River. Plant 1 storage pad runoff should be considered either under this removal action or accounted for as contamination in the FMPC storm sewer system.

Response The runoff from Plant 1 storage pad previously flowed through the waste pit area and to Paddys Run. The drainage flow patterns were modified in 1988 using curbing and reversing drainage ditch flows so that the flows from Plant 1 Pad are collected in the storm sewer system. Refer to Page 4-10, paragraph 1.

Comment 101. Section 4.2.2, Page 2: Because several waste pits contain VOC-contaminated material, it may be appropriate to evaluate the potential build up of VOC vapors beneath the cap and the possible installation of a venting system.

Response DOE agrees that it would be appropriate to evaluate the potential buildup of VOC vapors beneath the cap and the installation of vents, if the capping alternative is chosen. The following sentence has been added to the second paragraph of Section 4.2.2.: "Based on the volatile and/or reactive content of materials in the waste pits, consideration will be given to the potential for off-gas buildup and installation of a vapor venting system."

Comment 102. Section 4.2.2, Page 2, Paragraph 2: The statement ". . . portions of the waste pit areas designed as Drainage Areas . . ." is not clear. The portions of each drainage area to be capped needs to be specifically identified.

Response The statement in Section 4.2.2 refers to "areas designated as Drainage Areas" not designed. Note: The alphabetic designations for these drainage areas were specifically intended for application to Alternative 4 and should not be used in describing other alternatives. The drawings have been modified to clearly reflect the areas that will be capped.

Comment 103. Section 4.2.2, Page 2, Paragraph 2: The report should state why Drainage Area G will not be capped when sample location DD-07 was cited as one of the most contaminated areas previously in the report. In addition, clarify the southern extent of Area G (is it west of the silos?).

Response The contamination in the area designated as G is believed to be locally contaminated soils and would best be addressed by soil removal activities. The southern extent of Area G is just southwest of the Clearwell. The boundary of Area G coincides with the dike discussed in the response to Comment 52. See Figure 4-4.

Comment 104. Section 4.2.2, Page 2, Paragraph 2: As stated previously, Waste Pit 5 contains "listed" RCRA hazardous waste. The addition of fly ash will create additional RCRA waste because of the mixture rule causing administrative problems during future remedial actions.

Response Pit 5 has not been determined to be a hazardous waste management unit. FMPC is evaluating whether Pit 5 is a hazardous waste management unit. Although the addition of fly ash may increase waste volume, it represents an alternative that is reasonable to evaluate. Increase in waste volume cannot, by itself, screen out an alternative. If Pit 5 is determined to be a RCRA unit, this would be considered in the ARAR analysis for the Operable Unit.

Comment 105. Section 4.2.2, Page 2, Paragraph 2: The purpose of solidifying the wastes and capping waste pits 5 and 6 is not clear and the rationale should be discussed. The solidification of sludge and dewatering and capping of these pits does not fulfill the Remedial Action Objectives in Section 3.0 because the report states (in Section 2.1) that "no storm water runoff of concern to this removal action originates from Waste Pit 5" or Waste Pit 6. Furthermore, this activity makes the capping alternative less cost effective.

Response The area surrounding Waste Pits 5 and 6 are contaminated (Roy F. Weston, CIS, Volume II) and storm water runoff from these areas will not be addressed in the capping alternative unless the contaminated areas surrounding Pits 5 and 6 are covered.

Comment 106. Figure 2-4 shows the drainage areas, not Figure 2-3.

Response The designated drainage "areas" as applicable to Alternative 4 are indeed best shown on Figure 2-4. The drainage "ditches" in jurisdictional wetlands are shown in Figure 2-3.

Comment 107. Section 4.2.2, Page 2, Paragraph 1: This alternative includes capping Drainage Area F that, according to Figure 2-4, surrounds the K-65 silos. It is not clear how capping this area would be continuous with the other capped areas (D, E, J, and K). Furthermore, in Figure 4-1, no drainage patterns are shown around these silos, indicating that this area is not part of the capped area.

Response This EE/CA does not address capping as part of Alternative 2, the K-65 silos. Although the silos are part of drainage area F, the text states that the "capping system will cover the portions of the waste pit areas located in Drainage Areas B, C, D, E, F, J, and K." The limits shown in Figure 4-2 are correct.

Comment 108. Figure 4-1, Page 3: Several contour lines on Figure 4-1 are improperly marked. In Zone 3, the flow arrows indicate outward flow; however, the inner contour line is 590 and the outer is 595.

Response DOE concurs. Figure 4-1 has been revised to clarify the contour lines.

Comment 109. Section 4.2.2, Page 4, Paragraph 1: The report needs to clarify two items concerning the infiltration rates. First, clarify why several areas between zones were not included in the HELP model. Second, explain why "natural topographic features" and "existing drainage contours" were used and not final design topography and drainage patterns. The use of existing topography, which is generally flatter than the proposed design grades, will result in greater estimates of surface water infiltration.

Response All areas between zones are designed to be capped. A drainage ditch and anchor trench as shown in Figure 4-2 account for apparent gaps in the cap. Natural topographic features and existing drainage contours were used to eliminate the need

for excavation grading that was determined to require additional costs for waste disposal, require more schedule time, require extensive decontamination, and potentially increase worker exposure to hazardous and mixed components. The topographic features are adequate to promote drainage and would be identical to final surface grades as shown in Figure 4-3, with both values being the same, additional infiltration will not occur.

Comment 110. Section 4.2.2, Page 4, Paragraph 1: The results of the HELP model for the synthetic liner are noteworthy for Waste Pit 4, which underwent interim RCRA closure last year. The HELP model indicated that the synthetic cap allows approximately 0.5 inches of recharge a year into the waste pit.

Response The nature of this comment is uncertain. Section 4.2.2, page 4-2, paragraph 2, line 12 states that "a new cap will not be placed over Waste Pit 4 as part of this removal action." As such, the infiltration rate for a liner is incorrect; the infiltration rate for the RCRA cap should be used instead. This value is 0.016 inches/year.

Comment 111. Section 4.2.2, Page 4, Paragraph 1: The surface area of the drainage zones does not appear to be correct. For example, Zone 4 is listed as being 2.1 acres and Zone 3 is listed as 1.12 acres; however, from Figure 2-1, it appears that Zone 4 is 0.6 the size of Zone 3. This may have substantial ramifications for the HELP model as well as cost estimates. All area, volume, and rate parameters should be checked and consistent.

Response Figure 2-1 is an FMPC site and vicinity map and does not show each individual zone. Figures 4-1 and 4-2 have been revised to show the actual area of Zone 4.

Comment 112. Section 4.2.2, Page 4, Paragraph 2: The volume of water infiltrating through the synthetic cap seems excessive. The infiltration of over 250,000 and 120,000 gallons of water through the clay and synthetic cap, respectively, is questionable. The mechanism of infiltration through a synthetic liner needs to be described.

Response The infiltration quantities represent worst-case. The clay cap leakage is due to net infiltration through the clay matrix. The synthetic liner leakage is due to seam leaks, and undetected installation damage.

Comment 113. Section 4.2.2, Pages 4-5: Since cost was an important factor in choosing among the three capping subalternatives, appropriate documentation should be included to support the significant differences in cost. Additional cost documentation is required for all alternatives.

Response Additional cost and technical information concerning the caps have been provided in the Executive Summary.

Comment 114. Section 4.2.2, Page 5, Paragraph 1: The EE/CA states that "as an interim measure, it was determined that additional cost could not be justified." Supporting cost documentation regarding the costs associated with the different caps is required to be presented. The analysis regarding cap evaluation is not supported by the information presented in the EE/CA.

Response See response to U.S. EPA Comment 113.

Comment 115. Section 4.2.4, Page 5, Paragraph 1: In its description of storm water runoff treatment, the text states that ". . . suspended solids would be allowed to settle prior to treatment through the biodenitrification towers and effluent water system prior to

discharge . . ." However, the text does not provide any engineering calculations relating to treatment efficiency. According to Table 5-1, a large percentage of the uranium contamination is not filterable (i.e., is present in its soluble ionic form). Thus, there is no justification as to the mechanism used in the existing biodenitrification surge lagoon for removal of heavy metal contamination through settling. Further, there is no discussion of precisely which mechanism is proposed for removing soluble uranium from this stream. In general, the technology screening used for selection of such a treatment train is not mentioned in this section.

Response A 10 percent reduction in uranium concentration was the only treatment credit taken in the evaluation of Alternative 4. This 10 percent relates only to the settling of solids in the Biodenitrification Surge Lagoon. No uranium removal credit has been taken for processing of this flow through the Biodenitrification System on the Biodenitrification Effluent Treatment System. The wording in Section 4.2.4, page 4-5, has been changed to more clearly indicate that this water is only being processed through the Biodenitrification System and Subsequent Effluent Treatment System.

Comment 116. Section 4.2.4, Page 5, Paragraph 1: In its description of storm water runoff treatment, the EE/CA states that "suspended solids would be allowed to settle prior to treatment through the biodenitrification towers and effluent water system prior to discharge . . ." However, the EE/CA does not provide any engineering calculations relating to treatment efficiency. According to Table 5-1, a large percentage of the uranium contamination is not filterable because it is present in its soluble ionic form. Thus, there is no justification for use of the settling in the existing biodenitrification surge lagoon for the removal of heavy metal contamination. The EE/CA does not specify which mechanism is proposed for removing soluble uranium from this stream. In general, the technology screening used for selecting such a treatment train is not presented.

Response See response to U.S. EPA Comment 115.

Comment 117. Figure 4-3, Page 7: See comments for Figure 4-1. Legend should include subsurface drains.

Response The drawing has been revised to reflect this comment.

Comment 118. Figure 4-4, Page 8: This figure is too cluttered. Many of the lines are not defined in figure in the legend, the drainage flow arrows are difficult to follow, and the drainage boundaries are not clear. The figure is far too small to adequately illustrate the remedial alternative. This alternative should be illustrated using standard scales, and put on a large fold-out page, if necessary.

Response The drawing has been revised.

Comment 119. Section 4.2.4, Page 10, Paragraph 1: The EE/CA does not provide data showing that surface water runoff originating in Area A is uncontaminated.

Response See response to U.S. EPA Comment 59.

Comment 120. Section 4.2.4, Page 10, Paragraph 1: Runoff from Area A must be monitored for contamination prior to discharge to Paddys Run.

Response See response to U.S. EPA Comment 59.

Comment 121. Section 4.2.4, Page 10, Paragraph 2: The integrity of the liner in the Clearwell needs to be evaluated prior to continued use. It may be a continuing source of contamination.

Response Remediation of the Clearwell is being addressed under Operable Unit 1.

Comment 122. Section 4.2.4, Page 10, Paragraph 3: The text states that ". . . the required isolation of Area C is accomplished by existing topography." As previously discussed, the figures in the report do not include adequate topographic information to confirm such conclusions.

Response A topographic map of the area has been provided to give the needed information.

Comment 123. Section 4.2.4, Page 11, Paragraph 4: Although no additional contamination will be discharged into Area G, residual contamination already present in Area G may contaminate Paddys Run. This possibility, and appropriate controls, should be evaluated.

Response Any residual contamination that may exist in drainage area G is planned to be addressed with localized soil removal activities. Additionally, Area G will be utilized as an emergency overflow area for the runoff collection sump. This would only be used in the event of a storm event in excess of a 100 year, 24-hour storm. Any water that may accumulate in this area will be pumped to the runoff collection sump after the peak flows of the storm have passed. This will be done using a portable pump.

Additionally, the runoff collection sump will be equipped to monitor the volume and time of occurrence of any such overflow to Area G.

Comment 124. Section 4.2.4, Page 11, Paragraph 4: Data from Tables 2-1 and 2-4 (Sampling Locations DD-07, RO-13, and RO-17) indicate significant contamination in Area G. Will the runoff from this area be discharged into Paddys Run and, if so, will it be monitored prior to discharge?

Response See Response to U.S. EPA Comments 123 and 103.

Comment 125. Section 4.2.4, Page 11, Paragraph 5: As stated earlier, no data presented in the EE/CA supported the conclusion that runoff originating in Drainage Area A is acceptable for direct discharge to Paddys Run.

Response Sampling of drainage ditch flows downstream from area A have shown significant reduction in the levels of uranium since areas H and I have been diverted. Any additional remediation of area A will be done through soil removal activities. Also see response to U.S. EPA Comments 100 and 119.

Comment 126. Section 4.3, Page 12, Paragraph 3: The text should specify how the disposal volumes were determined, to what depth contaminated soils will be removed from the waste pits, and the level of "clean" that will be used to determine whether soil should be removed.

Response For the purpose of this EE/CA, the disposal values were determined from the waste volumes provided in the Operable Unit 1 Task 12 Report plus an additional one foot of excavated soil beneath the waste area. To provide more definite depth, borings would be required to determine the amount of soil to remove beneath the

waste. For the purposes of the EE/CA evaluation, the concentration used to determine soil removal is 35 pCi/g. This concentration is the acceptable concentration for residual uranium in surface soil recommended by the U.S. NRC Branch Technical Position on this subject.

Comment 127. Section 4.3, Page 15: Regardless of the preferred alternative, monitoring of Paddys Run should be included to indicate the reduction in uranium loading to the stream following the implementation of the removal action.

Response Monitoring of Paddys Run is addressed in the RI/FS.

Comment 128. Section 4.3, Page 15, Paragraph 2: ALARA concerns should be further explained.

Response Direct contact with the contents of Pits 1-3 would significantly increase worker exposure and health physics requirements for this removal action.

Comment 129. Section 4.3, Page 15, Paragraph 3: The phrase ". . . alternatives that would satisfy the objectives to an acceptable extent . . ." is not defined here or elsewhere in the report.

Response DOE concurs. The sentence in question has been rewritten for clarification to read, "While fully effective in meeting the removal action objectives as defined in Chapter 3.0, the waste removal alternative far exceeds the scope of the other removal action alternatives that have been developed also to satisfy the same objectives.

Comment 130. Section 5.1.1, Page 1, Paragraph 1: Protectiveness of public health and the environment should be defined.

Response Protectiveness of Public Health and Environment has been addressed and discussed in succeeding paragraphs on pages 5-1 through 5-4.

Comment 131. Section 5.1.1, Page 2, Paragraph 1: Calculations should be referenced here to quantify the difference in magnitude between uranium risks and risks posed by other waste materials at the site. This is the only way that the conclusion in the text can be fully justified.

Response See response to U.S. EPA Comment 6

Comment 132. Section 5.1.1, Page 2, Paragraph 5: It is unclear why a 50-year CEDE limit of 25 mrem is justified for direct ingestion of contaminated water and sediments as opposed to 4-mrem limit for the groundwater pathway. All pathways are based on direct ingestion. Furthermore, given that there are five operable units, a target value of 25 mrem/unit would exceed the 100-mrem limit set for all pathways.

Response The observation is correct; both drinking water and sediment are ingestion pathways. The use of different limits for such different pathways is consistent with the different dose limits within 40CFR141.16 (a 4 mrem dose limit for beta particle and photon-emitting radioactivity) and the "(draft) Proposed EPA Guidance for Exposure of the General Public" (which presents a dose limit of 100 mrem from all exposure pathways, including ingestion of sediment). The use of these differing limits is consistent with standard dose limitation practices and recommendations which set a more restrictive standard for the drinking water facility.

Comment 133. Section 5.1.1, Page 3, Paragraph 1: The calculations used to derive the 50-year CEDE should be provided.

Response The calculation of the 50-year CEDE for each intake of radioactive material is performed by multiplying the intake (pCi) by the radiation dose conversion factor (DCF) (mrem/pCi) for the radionuclide taken into the body.

Values for each DCF are given in Federal Guidance Report No. 11, EPA-520/1-88-020 (September 1988) and have been calculated using the methodology of the International Commission on Radiological Protection (ICRP).

Use of the CEDE values is described in Appendix C, Risk Assessment.

Comment 134. Section 5.1.1, Page 3, Paragraph 3: The source or equation for converting mrem to pCi/l or g/l should be referenced in the text.

Response See response to U.S. EPA Comment 6.

Comment 135. Section 5.1.1, Page 3, Paragraph 4: The Hazard Index is based on the estimated daily intake from all relevant pathways. This should be indicated in the text.

Response A discussion of the Hazard Index will be given in (new) Appendix C, Risk Assessment.

Comment 136. Section 5.1.1, Page 3, Paragraph 4: A health-based concentration for a child of 15 kg would be more appropriate to represent a higher risk population.

Response This comment appears to contradict comment 22. As stated previously, the Risk Assessment will address reasonable maximum exposure scenarios.

Comment 137. Section 5.1.1, Page 4, Paragraph 2: An indication of the types of remedial actions under consideration would enhance the elevation of each alternative.

Response A listing of the potential final remediation alternatives has been supplied for Operable Units 1 and 5 in Appendix A in the revised report.

Comment 138. Section 5.1.1, Page 4, Paragraph 2: CERCLA required that removal actions should contribute to the efficient performance of long-term remedial actions to the extent practicable. Consistency with the final action is only one of the factors to be considered in the "Implementability" factor. U.S. EPA EE/CA guidance should be consulted.

Response This paragraph -- Consistency with Final Action -- has been moved to Section 5.1.2 (Implementability) to be consistent with U.S. EPA EE/CA Guidance.

Comment 139. *Section 5.1.3, Page 5, Paragraph 4: The text uses a 5 year project duration to calculate total costs, stating that "even though the associated activities or structures may continue to function beyond this period, it has been assumed that they will be incorporated into the final remedial action after five years . . ." Although this may be the case, the EE/CA should include a sensitivity analysis to take into account the possibility of a significantly later implementation of the final remedial action.

Response The schedule for implementing the remedial action within the five year EE/CA project duration has not changed. Accordingly, any costs associated with the EE/CA will be incorporated into the final remedial action.

Comment 140. Section 5.2.1, Page 6, Paragraphs 3-4: All calculations and assumptions should be included either in the text or in an appendix. This includes the calculations for CEDEs and HIs. Assumptions should be referenced. Also, CEDE should be added to the list of abbreviations.

Response See response to U.S. EPA Comment 6.

Comment 141. Section 5.2.1, Page 6, Paragraph 4: The EE/CA should report a concentration rather than an activity level and indicate the specific isotopes that contribute to this value. No sediments sampling values have been reported to validate this statement and the location of this reported sample has not been shown to justify its suitability as a representative sample.

Response Concentrations of uranium in sediment in Paddy's Run were measured extensively in 1987 and 1988 (WMCO 1988, WMCO 1989). To properly estimate the concentration of uranium in sediment due to surface water runoff from the waste pit area, the highest concentration of uranium measured in Paddys Run north of its confluence with the storm sewer outfall ditch is used. The maximum measured concentration of uranium in sediment in this area is 5.15 pCi/g (including background of 2.9 pCi/g). The concentration is therefore approximately 2.3 pCi/g (3.4 μg/g).

Comment 142. Section 5.2.1, Page 7, Paragraph 1: The groundwater exposure pathway scenario described in this section would benefit greatly by a figure showing mass rates and the model cell used in dilution concentrations.

Response The concentration of uranium in groundwater as a consequence of charging of the Great Miami Aquifer along Paddys Run with surface water runoff from the waste pit area is based on the following assumptions:

- The concentration of uranium entering the aquifer from Paddys run remains unchanged from the annual average concentration entering the stream from storm water runoff. This value is extremely conservative in that it does not account for any dilution in Paddys Run between the point of discharge and the assumed off-site location (i.e., a no-flow condition is assumed in Paddys Run, even through storm water runoff is occurring from the waste storage area).

- The rate of leakage is equal to 14 inches per year, which is equal to the recharge value used in the groundwater flow model.

- The contaminated recharge completely mixes with the groundwater passing through the zone of interest.

- Recharge and mixing occur within one 125-by-125-foot model cell, which is commensurate with assuming that the well would have a radius of influence of approximately 125 feet. The conservatism in this assumption is that the recharge is also assigned across the 125-by-125 foot surface area, thereby representing a stream width many times greater than the actual width of Paddys run under low-flow conditions.

- The groundwater is pumped from a depth of 40 feet.

Comment 143. Section 5.2.1, Page 7, Paragraph 2: Indicate the additional pathways that were evaluated to support the reported dose of 21 mrem.

Response See response to U.S. EPA Comment 6.

Comment 144. Section 5.2.2, Page 8, Paragraph 1: Because uranium was detected in fish, the risk analysis should address the bioaccumulation potential of uranium, and compare the risk with the other risks posed by the site.

Response See response to U.S. EPA Comment 6.

Detection of uranium in fish in the Great Miami River is to be expected since uranium is a primordial material which is found at a natural background concentration of approximately 1.2 pCi/l in the River. Bioaccumulation factors for uranium have been reported in peer-reviewed literature to range from approximately 1 to 11. Concentrations of uranium in fish of the Great Miami River are expected to range from 1.2×10^{-3} pCi/g to 1.3×10^{-2} pCi/g from natural background concentrations of uranium in river water.

The calculated concentration increased for uranium in River water (see Appendix C) due to storm water runoff from the Waste Pit Area via Paddys Run is 0.34 pCi/l for the no action alternative. The concentration of uranium in fish due to this river concentration is calculated to be 3.7×10^{-3} pCi/g. Ingestion of fish (the varieties found in the Great Miami River near the FMPC) at a mean consumption rate of 14.3 g/day (EPA Exposure Factors Handbook) yields a CEDE of 4.8×10^{-3} mrem per year of intake. This dose is a few percent of the total does for the other pathways.

This calculation assumes that all of the fish consumed by the average "fish eater" is taken from the Great Miami River downstream from the mouth of Paddys Run. Considering the type of fish (rough fish) present in the River, this is a significant overestimation of fish consumption and radiation dose.

Comment 145. Section 5.2.2, Page 9, Paragraph 1: The EE/CA does not present data that supports the conclusion that fugitive dust emissions do not pose a potential risk to receptors.

Response DOE believes that a modification of the draft report is not necessary. Section 5.2.2. pertains to the no-action alternative, which would not generate fugitive dust emissions. (See U.S. EPA Comment 98, regarding fugitive dust generated by other alternatives.)

Comment 146. Section 5.3.1, Page 9, Paragraph 5: The data table in Section 2.3 shows only two samples (WMCO 16 and RO3) with total uranium below 10 g/l. The result for RO3 (7 g/l) is suspect because subsequent WMCO samples collected in the same location had total uranium concentrations of 1,560 g/l and 3,400 g/l. Therefore, background or residual concentrations were not established in Section 2.3.

Response DOE assumes that the prefix "μ" should have been included with each "g/l" values given in this comment.

Calculation of background or residual concentration of uranium is not considered essential for the purpose of this revised EE/CA since the acceptable uranium concentration is now derived from radiation risk considerations. While the comment is not completely understood, the response to comment 16 provides additional information regarding the uranium concentrations.

Comment 147. Section 5.3.1, Page 10, Paragraph 1: The "acceptable level of risk" needs to be defined.

Response See response to U.S. EPA Comment 6.

Comment 148. Section 5.3.1, Page 10, Paragraph 3: The residual contamination has not been fully characterized in the drainage area east of the area to be capped. In addition, all areas not capped will continue to contaminate surface water runoff to above background levels. Although the report states this is within the acceptable risk, it should also be noted the areas of residual contamination will act as a continuing source of contamination to Paddys Run. Also, the level of acceptable risk should be defined.

Response DOE concurs. The text has been revised to state that uncapped areas residual contamination will continue to act as a continuing source of contamination to Paddys Run. Also, see response to U.S. EPA Comment 29.

Comment 149. Section 5.3.2, Page 10, Paragraph 1: The text states that ". . . By reducing the amount of contaminants entering storm water runoff, the implementation of the capping alternative would satisfy the principal environmental objective of reducing the mass loading of uranium to Paddys Run." However, no engineering estimate or calculation presented as to the level of treatment provided by the proposed alternative. The report should state the effectiveness of this alternative in terms of percent removal of uranium or gross radioactivity. An alternative that costs several million dollars that only removes a small percentage of the toxicity hazard should not be considered effective.

Response An estimate of contaminants was made by comparing the capped versus non-capped areas and using the average uranium concentration in the runoff for each area (Tables 2-1 to 2-4). The text has been revised to indicate an 80 percent removal of uranium with the capping alternative.

Comment 150. Section 5.3.2, Page 10: While capping will not significantly decrease the volume of storm water from the waste storage area to Paddys Run, it will decrease the amount of contaminated runoff. This option needs to be further evaluated in the EE/CA.

Response This alternative is "further evaluated" in the EE/CA. A detailed evaluation is provided in Sections 5.3.3 to 5.39 and is compared to Alternative 4 in Section 6.

Comment 151. Section 5.3.3, Page 11: The objective of the removal is to reduce the impact of contaminated runoff on Paddys Run by reducing the volume of contaminated runoff that enters Paddys Run. Capping would be an effective alternative to achieve this objective. The need to treatment would not become a less significant or irrelevant factor.

Response DOE concurs that the capping alternative meets the objective of the removal action. However, the comment regarding treatment is not understood since treatment is not part of Section 5.3.3 in the EE/CA.

Comment 152. Section 5.3.4, Page 11: This section should state that the volume of the cap material represents less than 1 percent of the total material to be excavated. The volume is an insignificant amount and adds little difficulty to implementing any of the future remedial alternatives considered.

Response The percent increase in volume is not finalized since the future remediation volumes are not final. This alternative will result in more material to be handled, although it may be a small volume.

Comment 153. Section 5.3.4, Page 11: The text states that the capping alternative is inconsistent with most of the alternatives under consideration for the final action. This point should be elaborated upon. No definite final action is known yet.

Response The alternatives currently being considered for final remediation of Operable Unit 1 are listed in Appendix A of the revised report. The investments made into this removal action would not contribute in any way to several of these alternatives for final remediation.

Comment 154. Section 5.3.9, Page 13: This section should include data on various stabilizing agents, and how they have been used in similar wastes. Without such data, it is not possible to properly evaluate the cost or effectiveness of stabilizing the contents of Pits 5 and 6.

Response The requested information is based on "Historical Costs for Waste Pit 6," WMCO 1990.

Comment 155. Section 5.3.6, Page 12: It is not clear why the contents of Waste Pits 5 and 6 should be stabilized. Neither of these two waste pits currently contaminate surface water runoff. Therefore, the stabilization of these pits is not consistent with the removal action objectives.

Response Stabilization in Waste Pits 5 and 6 is required for the construction of the cap.

Comment 156. Section 5.3.7, Page 12, Paragraph 1: It is not clear what the permit-to-install is for. The actual permit should not be needed if the action is on-site.

Response DOE concurs. The permit-to-install (PTI) was for a DOE decision to implement waste pit area storm water runoff controls prior to the project becoming a Removal Action under CERCLA. The text has been revised accordingly. Also see response to U.S. EPA Comment 27.

Comment 157. Section 5.3.8, Page 12, Paragraph 1: The phrase ". . . aforementioned need for a change in course . . ." is unclear.

Response The aforementioned need for a change in course, refers to the plan for storm water runoff control under the Best Management Practices Plan at the FMPC. The plan includes the design of the collection system for the storm water runoff from the Waste Pit Area as described under Alternative 4 of the EE/CA. The design of this alternative is currently completed. Section 5.3.8 has been reworded for clarity.

Comment 158. Section 5.3.9, Page 13, Paragraph 1: The ". . . materials necessary to stabilize waste materials . . ." should be specified in the text.

Response DOE concurs. The term "materials necessary to stabilize waste materials" represented materials to stabilize (i.e., solidify) sludge in Pits 4 and 5. The text has been modified accordingly.

Comment 159. Section 5.3.9, Page 13, Paragraph 2: According to EPA EE/CA Guidance (pages 2-36) alternatives that include O&M after one year must be evaluated using two

present worth analyses. Detailed present worth computations should be included in an appendix that is referenced in the text.

Response The present worth calculation is now included as Appendix E.

Comment 160. Section 5.3.9, Page 13, Paragraph 2: An annual O&M cost of $278,000 appears high for activities that ". . . include only the cost of cap maintenance . . ." Please justify the use of 5 percent of the direct capital cost as an estimate of O&M costs. In addition for Alternatives 2 and 4, there is no mention of monitoring Paddys Run to indicate the effectiveness of the proposed removal. Monitoring costs should be included in O&M costs.

Response The estimated cost of $278,000 for annual O&M costs associated with the Capping Alternative is based on 5 percent of the Direct Capital Cost to implement this project. Several factors exist that justify this cost. The location of the removal action is within a strictly controlled zone within the FMPC site. This factor alone complicates annual operation and maintenance activities. In addition to being a controlled zone, this area will be undergoing remediation activities and investigations for at least two other Operable Units. These activities will make O&M activities more difficult. Additionally, this area is a controlled zone with respect to radiological concerns. Any activity within this area will require extensive support from the Radiological Safety groups on-site. This cost also covers costs that would be incurred for patching of the capping materials and for monitoring of downstream drainageways to determine the effectiveness of this removal action. Sections 5.3.3 ans 5.4.3 of the text have been modified to indicate that Alternatives 2 and 4 will include post removal-action monitoring to determine the effectiveness of the removal action.

Comment 161. Section 5.4.2, Page 16: A 10 percent increase in mass loading of uranium to the Great Miami River is unacceptable. Current discharge rates already exceed the total annual permitted limits by 15 percent (see South Plume EE/CA).

Response Section 5.4.2, Page 16 does not state that a 10 percent increase in the mass loading will result from the implementation of Alternative 4. This comment implies that current discharges already exceed DOE limits by 15 percent and that this project may increase this by an additional 10 percent. However, it should be noted that the approximate 15 percent excess is based on a concentration of uranium and not mass. The additional flows from the Waste Pit Area Storm Water Runoff Control project will not change the concentration of uranium being discharged and therefore will not increase the 15 percent excess.

Comment 162. Section 5.4.2, Page 16: Specify the current and projected mass loadings to the Great Miami River.

Response The estimated discharge of uranium to the Great Miami River is currently approximated to be 1,870 pounds/year. It has been estimated that approximately 150 pounds of uranium/year will be collected by the Waste Pit Area Storm Water Runoff Control Project. Approximately 10 percent of this 150 pounds/year will settle in the Biodenitrification Surge Lagoon (BSL). Therefore, approximately 135 pounds/year will be contributed to the Great Miami River due to this removal action. This estimate takes no additional credit for treatment that will be attained in the pilot scale demonstration treatment system that will be installed at the BSL. This section has been modified to reflect this comment.

Comment 163. Section 5.4.2, Page 15, Paragraph 1: It is unclear why ". . . no environmental improvement . . ." would be seen upstream from the collection sump (because waste pits, etc., are not controlled). The purpose of Alternative 4 is to collect or divert and collect all contaminated storm water runoff.

Response DOE concurs. The statement ". . . no environmental improvement . . ." has been deleted.

Comment 164. Section 5.4.2, Page 16: The design and estimated operational contaminant (all applicable HSLs) removal efficiency for the AWWT facility and the projected mass loading to the Great Miami River should be presented. A chart showing current contaminant treatment should also be presented.

Response The AWWT is presently being designed to remove uranium from the FMPC waste waters. Treatment studies have indicated that removal to 20 ppb is achievable. No specific treatment is planned for HSL removal, because no indications of these constituents were evident at Manhole 175. The only HSL treatment that would be included in the design is for protection of the uranium removal equipment.

Comment 165. Section 5.4.2, Page 17, Paragraph 2: The EE/CA should discuss the type of ". . . modifications to existing ditches . . ." and ". . . good construction planning . . ." that will be implemented to minimize discharge during the change over.

Response The text has been changed to address this comment.

Comment 166. Section 5.4.8, Page 18, Paragraph 3: The collection and treatment alternative will only be "fully effective" when a new waste water treatment facility is completed (as stated in Section 5.4.5).

Response DOE concurs. The last sentence in Section 4.4.8 has been modified.

Comment 167. Section 5.4.9, Page 18, Paragraph 1: Full implementation of the collection and treatment alternative requires the presence and operation of the advanced waste water treatment plant. The associated costs and time factors involved with this crucial phase of the alternative have not been addressed in the time and cost evaluation of this alternative.

Response Approximate cost of time factors are not included since the AWWT facility is being funded from a separate source and is independent of the waste pit area storm water runoff control removal action.

Comment 168. Section 5.5.1, Page 19, Paragraph 3: The EE/CA states that ". . . where radionuclides are concerned, the process of coordinating DOE regulations with mainstream state and federal environmental regulations is required." Yet nowhere in this report is this actually attempted. Rather the analysis relies solely on TBCs derived from DOE 5400.5. Thus compliance with only a small fraction of the ARARs are actually evaluated in the report. Additionally, health-based criteria and exposure assessments are TBCs and are to be used to set cleanup levels. This needs to be clarified in the text.

Response DOE concurs. Therefore, the revised EE/CA focuses on risk and not on concentration limits or radiation dose limits. Health-based criteria and exposure assessment are used for alternative assessment.

Comment 169. Section 5.5.1, Page 19: Uranium is not excluded from regulation under Federal drinking water standards. While no Federal Maximum Contaminant Level (MCL) exists or has not been proposed for uranium, the Maximum Contaminant Level Goal (MCLG) is targeted at zero, which is consistent with U.S. EPA's policy regarding carcinogens.

Response See response to U.S. EPA Comment 16.

Comment 170. Section 5.5 and Tables: This section requires more detail. CERCLA requires that remedial and removal action meet applicable or relevant and appropriate requirements (ARARs) of other environmental laws. The selected alternative must attempt to meet or exceed all ARARs. For example, the present MCL for gross alpha and gross beta in several surface water samples exceeds limits. Therefore, the surface water discharge is not in compliance with ARARs. Radon requirements of 40 CFR 61, Subpart Q is a chemical ARAR. An action ARAR is the requirements to secure approval to construct prior to commencing a project that results in increased air emissions (radionuclides and nonradionuclides).

Response DOE agrees that the selected alternative must attempt to meet or exceed all ARARs. Storm water runoff is not drinking water and, therefore, is not required to meet the MCLs for gross alpha and gross beta activity. It is the groundwater or other potential drinking water source into which the storm water runoff flows, for which exceedance of MCLs is of concern.

40CFR61, Subpart Q will be added to the ARARs list.

Comment 171. Table 5-2, Page 20: The EPA Interim Drinking Water Standards should be considered ARARs, especially when concentrations in several surface water samples exceed the limits for gross alpha and gross beta.

Response Storm water runoff is not drinking water and hence the EPA Interim Drinking Water Standards are not "appropriate" for storm water runoff standards at this site.

Comment 172. Table 5-2, Page 21: Include the State of Ohio location standards for treatment, disposal, and storage facilities in the floodplain.

Response The State of Ohio location standards for treatment, disposal, and storage facilities in the floodplain was included as item 6 on page 5-21 in the May 1990 draft EE/CA. The standards are included in the revised EE/CA. Please provide additional information regarding the comment if additional location standards as suggested.

Comment 173. Table 5-2: This information should be presented in the format presented in U.S. EPA ARAR guidance.

Response The level of detail in the EE/CA as requested by these EPA comments (for Risk Assessment, ARARs, etc.) is inconsistent with the brevity recommended for (implied for, actually included in other, etc.) EE/CAs.

Comment 174. Table 5-2: RCRA-regulated waste must be included in the list for action specific ARARs or TBCs. See U.S. EPA's policy on "Environmental Review Requirements for Removal Actions."

Response RCRA-regulated waste is expected to be present in areas within Operable Unit 1 and will be addressed in the Operable Unit 1 RI/FS. Elevated levels of RCRA-regulated constituents have not been identified in the storm water runoff from the

waste pit area. Hence, RCRA related ARARs need not be included in the waste pit EE/CA.

Comment 175. Section 6.2, Page 1, Paragraph 4: It is unclear what "residual loadings" will exist if the capping alternative is implemented. It is also unclear how the environment upstream of Paddys Run will be more protected by the capping alternative.

Response The residual loadings referenced to in this Section would be loadings that would exist from the drainage ditches down stream from the capped pit areas that may still contain minimal amounts of contamination.

The "Upstream Environments" refers to the areas upstream of Paddys Run and Down stream from the waste pit areas not upstream sections of Paddys Run. Text has been changed to clarify this.

Comment 176. Section 6.2, Page 4: CERCLA requires that the toxicity, mobility, and volume be reduced to the maximum extent practicable. The statute gives preference to the treatment of the waste or source material. Under this mandate, it would make more sense to prevent the water from becoming contaminated as part of this removal action.

Response Section 121 (b) of CERCLA establishes cleanup standards for remedial actions. These include, among others, the objectives referred to in the comment. All of the remedial objectives contained in Subsection B of Section 121 of CERCLA are being evaluated in the FS. For purposes of this EE/CA, Alternative 2, Capping, does "prevent" the storm water runoff from becoming contaminated, it does not meet the mandate of giving preference to treatment of the waste or source material. Alternative 5, Source Removal, does meet the mandate, but was considered in the EE/CA to be a long-term response action more appropriate to the RI/FS. The preferred alternative, Alternative 4, Collection and Treatment, does include treatment of the storm water runoff resulting from contact with the source material. Therefore, the EE/CA,which does not represent the selection of a final remedial action, has considered to some degree the preference for treatment.

Comment 177. Section 6.2, Page 5, Paragraph 1: The fact that cost of the alternative was previously approved for funding is not a justification or factor in selection of the best remedy to address the environmental and public health threat of the contaminated storm runoff.

Response This statement is made for information purposes and should be provided since timeliness is a factor to be considered in the evaluation.

Comment 178. Section 6.3: Based on the information presented in the EE/CA and other information available to U.S. EPA, the selected alternative is not justified.

Response The resolution of all comments received to date will justify the selected alternative.

Comment 179. Section 6.3, Page 5: The EE/CA states that the collection and treatment option is consistent with all final remedies being considered for both the waste pits (Operable Unit 1) and all other environmental media (Operable Unit 5). This should be demonstrated in the EE/CA.

Response See response to U.S. EPA Comments 25, 31, and 137.

Comment 180. Section 6.3, Page 5, Paragraph 1: The final statement of the text states that the preferred alternative (collection and "treatment") ". . . can be implemented for half the cost of the capping alternative, while providing equal or greater protection for public health and the environment." However Section 5.4.3., Reduction in Toxicity/ Mobility/Volume, states that ". . . rather than actually being treated, the uranium is essentially being rerouted to the Great Miami River without first passing through Paddys Run." In contrast, the capping alternative is expected to greatly reduce the contact between the runoff and the radioactive waste materials, thus resulting in a significant decrease in mobility. Thus the report compares two options with widely varying effectiveness, and erroneously selects an alternative based on cost factors only.

Response The resolution of all comments received to date will justify the selection of Alternative 4.

Comment 181. Appendix A: The results of the HELP model depends on some factors that are not consistent with the design assumption. For example, the text states that the simulations assume current topography. For Areas 1 through 5, a uniform slope of less than one percent is used. This is not consistent with the design slope of five percent. In addition, the design of the cap in Area 3 is three to six percent.

Response The results of the HELP model indicate that a 5 percent slope was used for Zones 1 to 3, and 2 percent for Zones 4 and 5. This is consistent with current topography.

Comment 182. Appendix A: Cost estimate sources should be referenced. Each table should include a brief description of the alternative in its heading for purposes of clarity. It is unclear why cost estimates are required for Alternatives 3 and 5.

Response DOE concurs. Cost estimate sources are now referenced. The title for each alternative is provided in the heading for clarity. Cost estimates were provided for Alternatives 3 and 5 as a means for evaluating the cost versus benefit of each alternative. Additionally, these costs are a source of detailed information requested in U.S. EPA Comment 21.

Comment 183. Appendix B (actually Appendix A), Alternative 2: Cost estimates should be more comprehensive to include items such as site preparation, etc. Mobilization/ Demobilization costs of $5,000 are probably low, considering the decontamination required for all exposed equipment. A solidification costs of $4.00/ft^3 needs to be referenced. A design (engineering) cost of 20 percent, amounting to nearly a million dollars, appears high for a simple capping alternative. Annual O&M costs, mentioned in the text, should also be added to the table.

I. Pit 5 - 52,000 sq ft versus
II. Pit 5 - 47,5000 sq ft
II. Pit 5: 5 x 47,500 = 237,500 not 236,250
III. Liner coat = 1,600,900 not 1,600,800
IV. Change "demolition" to demobilization.

Response Mobilization/Demobilization costs have been revised to reflect site complexity. The design cost of 20 percent represents all engineering and subcontract administration required on a complex site such as this. The cap design cost appears reasonable when consideration for design, cross-sections, subcontracting, surveying, testing, and topographic as-built costs (as well as DOE and WMCO reporting criteria on CDR, QA, Health and Safety, Environmental Control, Scheduling and Budget, and Progress

Reporting) are taken into account. A 20 percent cost is typical for DOE site projects and is generally accepted as a conservative number.

The O&M costs are used for comparative purposes and are based on a percentage of capital costs. A breakdown was not provided in Appendix A (now Appendix D in the revised report) due to the fact that a percentage value was used.

Comment 184. Appendix B (actually Appendix A), Alternative 3: Mobilization/Demobilization costs are not listed. Disposal Costs of $324/yd^3 need to be referenced. Annual O&M costs also need to be added to this table.

Response See attached information regarding Guidelines for Construction Estimates - FMPC Appendix D WMCO:CE:88-218.

Comment 185. Appendix B (actually Appendix A), Alternative 4: The cost estimate lacks sufficient detail for review. An estimate summary of $699,391 and its six significant figures, is not appropriate for an EE/CA-level cost estimate. In addition, a basis is required for each of the line items in this cost estimate.

Response A revised cost estimate for the Waste Pit Area Storm Water Runoff Control Project has been included with this response summary to provide additional detail.

Comment 186. Appendix B (actually Appendix A), Alternative 5: A basis is needed for the $1,485/yd^3 disposal cost at Nevada Test Site (NTS). A $50 million design cost also appears excessive for a remedial action consisting only of excavation and off-site disposal.

Response See attached information regarding Guidelines for Construction Estimates - FMPC Appendix D WMCO:CE:88-218.

Response to Verbal Comment from U.S. EPA RE: Radon Flux

Comment A verbal concern was expressed by U.S. EPA's Office of Radiation Programs about the Radon Flux in the area of the Waste Pits. The concern is that the selected alternative may alter the existing radon flux emanating from the surface of the waste pits.

Response The selected alternative (Alternative 4) will have no effect on the radon flux from the waste pits. This is because Alternative 4 makes no modifications or disruptions to the waste pits as they currently exist. This alternative would come no closer to the contents of any of the waste pits than approximately 50 feet.

The EE/CA has been changed to include 40CFR61, Subpart Q as an action specific ARAR. In addition, radon flux measurements will be conducted as part of the RI/FS work on Operable Unit 1.

COMMENTS ON THE WASTE PIT EE/CA AND DOE RESPONSES

August 1990

Ohio EPA Comments

SPECIFIC COMMENTS

Comment 1. ES-2, third paragraph: DOE DCGs for drinking water should also be considered here because of the potential impact of these discharges on groundwater.

Response Uranium is by far the most prevalent chemical or radioactive material present in the storm water runoff, as evidenced by analyses of surface water, sediment, and groundwater in the vicinity of Paddys Run and the Storm Sewer Outfall Ditch. Additionally, the potential toxicity and potential radiocarcinogenicity of uranium at its concentrations relative to other materials emitted from the Waste Pit area, far outweighs contributions from other chemicals or radionuclides. The use of the derived concentration guide (DCG) for uranium provides a systematic method for quantitatively addressing radiation dose limits.

The question which arises is whether the DCG for uranium is "protective" of public health.

There is currently no MCL for uranium in community water systems. The MCL for gross alpha particle activity (15 pCi/l) presented in 40CFR141.15(b) specifically excludes uranium and radon. In the absence of an MCL for uranium, an acceptable concentration for uranium in groundwater must be determined in order that the interim remedial action for the waste pits can proceed.

In the process of selecting an acceptable concentration for uranium in groundwater that may be used as a drinking water source, various approaches were considered. A concentration limit of 100 µg/l (76 pCi/l) was recommended by M. E. Wrenn, et. al., in Health Physics, Vol. 48, pp. 601-633 (1985). This limit was recommended to limit toxic effect to the kidney. A concentration limit of 105 µg/l for adults is derived from the reference dose of 3 µg/kg/day for uranium (EPA IRIS computer database).

An acceptable concentration for uranium in groundwater can be derived from radiation risk considerations. In the proposed standards for the control of residual radioactive materials from inactive uranium processing sites, EPA has proposed a concentration limit of 30 pCi/l (45 µg/l) for combined U-234 and U-238 to present the same level of risk as for radium at its MCL of 5 pCi/l (52FR36001 and EPA 520/1-87-014).

Concentration limits based on radiation dose considerations are directly related to concentration limits based on radiation risks. For example, although the concentration limit (MCL) for Ra-226 (5 pCi/l) is based on a risk determination, the annual radiation dose is 4 mrem from ingestion of water having an Ra-226 concentration of 5 pCi/l at a rate of two liters per day for one year. The annual dose equivalent limit of 4 mrem is also the limit from which MCLs for beta particle and photon radioactivity from man-made radionuclides are determined [40CFR141.16(a)]. In accordance with DOE Order 5400.5 (February 8, 1990),

acceptable concentrations of radioactive materials in drinking water are derived from the radiation dose limit of 4 mrem per year. There is no exception made in DOE Order 5400.5 for uranium isotopes in drinking water. The concentration guide for uranium in drinking water is calculated to be 22 pCi/l (33 µg/l) (DOE Order 5400.5, Chapter III).

Although the concentration guides for uranium isotopes presented in DOE Order 5400.5 (from which the drinking water limit for uranium is calculated) are rounded to one significant figure, calculation of the acceptable concentration of uranium to more significant figures can be performed by use of the source documents referenced in the Order (e.g., DOE/EH-0071, Internal Dose Conversion Factors for Calculation of Dose to the Public). These calculations give an acceptable uranium concentration of 22.4 pCi/l (33.5 pCi/l). This rounded to 22 pCi/l (33 µg/l).

Use of radiation dose conversion factors other than those presented in DOE/EH-0071 can give a derived concentration limit that differs somewhat from 22 pCi/l (33 µg/l). For example, use of the dose conversion factors from Federal Guidance Report No. 11, EPA-520/1-88-020 (September 1988) gives a derived concentration limit of 20.4 pCi/l (30.6 µg/l). The selected value differs by less than 10 percent and is well within the range of uncertainties of the factors from which the concentrations are calculated.

A proposed concentration for uranium in water which could be used as a drinking water supply is 30 µg/l (20 pCi/l) and is based on an annual radiation dose limit of 4 mrem, an annual ingestion rate of 730 liters, and use of the dose conversion factors form Federal Guidance Report No. 11. This annual dose limit corresponds to an annual radiocarcinogenic risk of approximately 5×10^{-7} and a 70-year lifetime cancer risk of 4×10^{-5}. (use of alternative risk coefficients give a 70-year lifetime cancer risk of 1×10^{-4}.

Selection of 30 µg/l (20 pCi/l) as the acceptable concentration for uranium in groundwater can be justified in a number of ways. It is derived from a radiation dose limit (4 mrem/yr) which is consistent with the standards of 40CFR141. More importantly, it presents a radiation risk that is as health-protective as the radium MCL.

Comment 2. ES-5, last paragraph: DOE cannot state with absolute certainty, at this point in the RI/FS process, that the collection and treatment alternative is "consistent with the final remedial actions for both the waste pits (Operable Unit 1) and the regional environmental media (Operable Unit 5)." The RI/FSs for these operable units are not yet complete, nor has a final remedy been selected. DOE needs to qualify this statement.

Response DOE concurs. The evaluation of removal actions is to include the factor of consistency with final remedial actions. Although a final action has not yet been selected for either Operable Unit 1 or Operable Unit 5 under the feasibility study, various alternatives have been developed for each. The alternatives are listed in a new Appendix, and are currently under detailed analysis in the RI/FS. It is expected that any alternative for final remediation under Operable Unit 1 will require an upgrade of the storm water collection and control system; therefore, the system proposed under Alternative 4 would likely become an integral part of the final remedy. In addition, by cutting off contaminated runoff to Paddys Run, a source of continuing release to both the surface water in Paddys Run and the groundwater beneath Paddys Run is eliminated. Therefore, Alternative 4 can be considered supportive of the long-term remedial action program for the regional

environmental media under Operable Unit 5. This is discussed in Section 5.4.4 Effectiveness: Consistency With Final Action of the EE/CA. The statement commented on in the Executive Summary has been clarified.

Comment 3. Table ES-1, Page ES-6: Statements on consistency of the capping and collection and treatment alternatives with Operable Units 1 and 5 must be qualified as final remedies for these operable units have not been selected. Under the "Effectiveness: Other Factors" evaluation factor for Alternative 2, it is not clear what is meant by the statement: "damage has little effect."

Response DOE concurs. The statement in Table ES-1 has been changed to read "Consistent with all alternatives recommended for detailed analysis for Operable Units 1 and 5". The statement concerning "damage has little effect" has been deleted.

Comment 4. Table ES-1, Page ES-7: Under Alternative 2 of the Evaluation Factor of administrative feasibility of implementability, it is not clear what previous commitment would need to be reversed here. The nature of this "previous commitment" should be specified.

Response The commitment referred to is the decision made by DOE to implement the Waste Pit Area Storm Water Runoff Control project, which was made prior to the project becoming a Removal Action under CERCLA. The text has been modified to reflect the need for a re-design for Alternative 2.

Comment 5. 1-1, last paragraph: The reference to the National Contingency Plan (NCP) of "April 1988) should be changed to March 8, 1990, the date on which the final NCP was published in the Federal Register. The same change should also be made to the last paragraph of ES-1.

Response The NCP was finalized in April 1990 (55 Federal Register 8666). The text has been changed accordingly.

Comment 6. 2-7, 2.1: The Advanced Wastewater Treatment (AWWT) facility mentioned in paragraph four is the element of Alternative 4's treatment train which is intended to remove radioactivity (uranium) from the runoff collected from OU1. If the AWWT facility's purpose is to remove the primary contaminant of concern, a detailed technical discussion should be provided supporting its use as part of the preferred alternative. This discussion should provide estimated removal efficiencies for uranium in runoff based on available literature and past operations of similar systems. When will this plant be in operation?

Response The Advanced Wastewater Treatment (AWWT) Facility is intended to treat FMPC wastewater discharge to Manhole No. 175 to meet best available technology (BAT) for the removal of radioactivity. DOE Order 5400.5 requires BAT as the required level of treatment for liquid wastes containing radioactive material for streams that contain quantities of radioactivity in excess of this order. The streams targeted for treatment are the general sump, biodenitrification facility, sewage treatment plant, waste pit perimeter area, and Storm Water Retention Basin (SWRB). The FMPC's targeted treatment technologies are ion exchange, or reverse osmosis, or a combination of both--whichever provides BAT treatment. The final design will be based on treatability studies that are presently being conducted. The FMPC has completed bench scale studies which showed that ion exchange and reverse osmosis are capable of removing uranium. The FMPC is in the process of awarding a contract for testing an onsite demonstration unit. This unit shall provide performance data on ion exchange and reverse osmosis.

The FMPC is also moving forward on the design effort for this facility. Presently, the FMPC is conducting Title I design for the AWWT Facility. This facility is scheduled for completion in the first quarter of FY 1994. The AWWT Facility is proposed to treat a total of 1100 gallons per minute (gpm). This treatment flow is comprised of 700 gpm for treatment of the discharge of the SWRB and 400 gpm for treatment of other streams including process wastewater. The waste pit runoff would be handled as part of the process wastewater. The 700 gpm system will most likely contain clarification, filtration, and ion exchange. The 400 gpm system will include all of the equipment of the 700 gpm system with the addition of reverse osmosis. This facility is designed to treat to a level of approximately 20 parts per billion of uranium.

The FMPC obtained a new National Pollution Discharge Elimination System (NPDES) permit (No. 1I000004*BD) on February 12, 1990. This permit will expire on February 9, 1995.

Comment 7. 2-24, first paragraph: DOE must explain what exposure assumptions are built into the derived concentration guides (DCGs) and how these guides are consistent (if they are indeed consistent) with the 10^{-6} excess lifetime cancer risk value used by USEPA as the point of departure for assessing long-term cleanup goals.

Response Numerous exposure pathways were considered in the exposure assessment in support of the dose and risk assessment results. Most exposure pathways did not contribute significantly to the total exposure of hypothetical receptors. Details of the exposure, dose, and risk assessment were not presented in the May 1990 EE/CA report. The report has been revised to incorporate an appendix, Risk Assessment, which presents models parameters, and results of the risk assessment.

Also refer to response to OEPA Comment 1.

Comment 8. 2-24, last paragraph: See ES-2, OEPA Comment 1.

Response See response to OEPA Comment 1.

Comment 9. 2-26, second and third paragraphs: Here DOE uses MCLs for drinking water for discharge to Paddys Run. Therefore, drinking water levels (DCGs) for uranium should also be considered in the runoff from the waste pit area.

Response See response to OEPA Comment 1.

Comment 10. 2-28, first paragraph: Besides the DOE DCG for surface water releases, are there any other state or federal surface water standards or criteria for uranium or other radiological compounds which are exceeded by the storm water runoff?

Response See response to OEPA Comment 1.

Comment 11. 2-28, 2.4.2: It is possible that a short duration summer storm could result in a discharge of contaminated storm water to Paddys Run without upstream dilution.

Response DOE concurs. However, the occurrence of such a localized storm is very unlikely and since it would be such a small storm of short duration the contribution would be very minor. A localized storm will be addressed by the implementation of Alternative 4.

Comment 12. 2-30, top of the page: Define what is an unacceptable level of risk?

Response See response to OEPA Comment 7.

Comment 13. 2-30, 2.4.3.3: How can this statement be made? Currently the south plume contains residential and industrial water supply wells that are not fully utilized because of uranium contamination. Discharges such as those from the waste pit area to Paddys Run have resulted in this contamination.

Response A revised section, Potential Receptors, has been included and is based on available information compiled for the South Plume EE/CA.

Comment 14. 3-1, Section 3.2, second paragraph: Since the various uranium isotopes mentioned here have potential carcinogenic effects, it is not appropriate to merely look at the sum of the ratios of the observed concentration of each radionuclide to its corresponding DCG as if the only interest is a hazard index-type toxicity effect. Since the DCG for individual radionuclides may already exceed the 10^{-6} excess lifetime cancer risk, the summation of these DCGs, even where their ratio is less than 1, would only increase the cancer risk further above the 10^{-6} level.

Response See response to OEPA Comment 1.

Comment 15. 4-2, Section 4.2.2, first paragraph: The reference to Figure 2-3 as representing the surface drainage areas is incorrect. The correct figure showing these drainage area is Figure 4-4.

Response Actually, neither of these figures shows Drainage Areas B, C, D, E, F, J, and K clearly. These are best shown in existing Figure 2-4. However, the alphabetic drainage area designations were specifically developed for Alternative 4. The text has been changed to reflect the intent of covering the surfaces of Pits 1 to 6, the Burn Pit, and a perimeter area around these areas.

The reference to Figure 2-3 is incorrect. The text has been revised to reference Figure 2-4.

Comment 16. 4-2 and 4-4, Section 4.2.2: The three capping subalternatives do not provide sufficient protection against maximum frost penetration. A minimum of 30-36 inches is necessary above any clay, or synthetic, or synthetic cap at the site to provide for adequate long-term protection of the cap against maximum frost penetration. In addition, any cap over the waste pits would, at a minimum, have to meet the specifications of Ohio Administrative Code (OAC) (although, because of the nature of the waste contained in the pits, capping consistent with USEPA's Minimum Technology Guidance for Final covers on Hazardous Waste Landfills and Surface Impoundments may be more appropriate).

Response While it is true that as synthetic liner overlain with 12-18 inches of top soil does not provide the specified protection against frost penetration "to provide for adequate long-term protection of the cap against maximum frost penetration," the liner is proposed as an interim measure not as a final long-term measure. Adequate frost penetration protection would be provided as part of the final remedial action. There appears to be confusion over what regulations will apply to the waste pit area. In OAC 3745-27-01, Solid Waste Disposal Regulations, a sanitary landfill is defined as a "land disposal site employing a method of disposing of solid wastes . . ." with solid waste being "substances which are not harmful or inimical to public health . . ." The current regulatory understanding is that the waste pit area does not

meet the Ohio definition of a sanitary landfill and is thus not subject to OAC 3745-27 regulations. However, if the state wishes to classify the waste pit area as a sanitary landfill, the proposed cap will meet the closure requirements of sanitary landfills (OAC 3745-27-10) since the existing cover and proposed cover would exceed cover requirements of 24 inches (OAC 3745-27-10(c)(1)), provide adequate drainage and slopes, and be properly vegetated. As for using the EPA's guidance on capping, again the suggested source is for final covers used in final remedial actions and in this case is not applicable.

Comment 17. 4-2, 4.2.2: This section states that once the cap is installed, net runoff will not change due to the soil cover. This does not include flow through at the clay-liner interface. The soil cover will be less permeable than the present cover and runoff will increase. Explain.

Response DOE concurs. However, since this water will be significantly detained by the soil cover layer there will be little or no downstream impact.

Comment 18. 4-5, 4.2.4: Will any of the proposed drainageways require lining? How deep are they and what is the underlaying soil?

Response Several of the drainageways will be constructed using precast or cast-in-place concrete trenches. These methods are being used in order to minimize the excavations in confined areas. These will not be lined with any additional material since they will normally contain flows for only a short period of time (several hours) and will have minimal hydrostatic head. The underlying material for the existing drainageways are native soils and clays. The depth of these drainageways range from less than one foot to approximately 15 feet. It should be noted that the majority of the flow that is currently carried by the deepest of these drainageways will no longer be conveyed by this drainage channel. Therefore, this channel will have significantly lower flows.

Several existing drainageways will be used to convey the collected storm water. These will not be lined with any additional material since they will normally contain flows for only a short period of time (several hours) and will have minimal hydrostatic head. Further consideration is being given to the two detention areas that will pond water for several hours during storm events. These areas are immediately upstream of the two flow control structures. Steps will be taken to ensure that a maximum permeability of 1×10^{-7} cm/sec exists in these areas.

Comment 19. 4-5, first paragraph: Ohio EPA does not agree with DOE's statement in this paragraph that the synthetic liner cap would "enhance any final remedial action which involved capping." A synthetic cap would not enhance any final remedial action which involved capping since it would be unlikely that a membrane liner cap could provide sufficient long-term effectiveness in reducing infiltration into the waste. Additionally, it would not comply with the provisions of the OAC 3745-27 for closure of landfills, nor would it be consistent with USEPA's Minimum Technology Guidance, both of which would seem to have some potential applicability to the waste pits.

Response The synthetic cap would exist at the time a final remedial action occurred. Since a new cap would be placed over the existing liner or the existing liner would be integrated into the final cap design, it could only enhance the performance of the final cap because it would provide an additional barrier layer. This additional barrier layer would reduce infiltration into the waste zone, which should be considered desirable to the state. OAC 3745-27 applies to Sanitary Landfills. A

final cover design would, by definition of U.S. EPA Minimum Technology Guidance for Final Covers on Hazardous Waste Landfills and Surface Impoundments, exceed the cover requirements in OAC 3745-27-10(C).

Comment 20. 4-9, 4.2.4: Treatment efficiencies of the biodenitrification towers are not discussed in the description of Remedial Alternative 4. As there are two such towers in place and operating at FMPC, this information should be available. Operations and maintenance issues concerning uranium loading of the towers or tower media should be addressed as well. Also, it is not clear if the effluent water treatment system mentioned here is the AWWT facility.

Response The Biodenitrification Towers are not designed to treat the collected stream for uranium, which is the contaminant of concern in this removal action. The effluent water treatment system that is mentioned here is not the AWWT. The reference to the Activated Sludge plant that is installed downstream of the Biodenitrification System.

Comment 21. Figure 4-3: The accumulation trenches should be clearly identified as such in the legend.

Response This comment is not understood. Please clarify the term, "accumulation trenches."

Comment 22. 5-2, last paragraph: A hazard index must be calculated for ingestion of uranium-contaminated sediments to determine if ingestion of these sediments poses any unacceptable risks based on chemical toxicity, Additionally, DOE must evaluate risks so those individuals who may consume contaminated media (i.e., groundwater, sediments) using information provided by USEPA in their Health Effects Assessment Summary Tables. The HEA Summary Tables publication for fourth quarter FY 1989 (OSWER publication #OS-230 or ORD publication #RD-689, dated October 1989) contains quantitative information for evaluating carcinogenic risks from exposures to radionuclides and may yield risk levels which are significantly different than those calculated by DOE.

Response See response to OEPA Comment 7.

Comment 23. 5-3, second full paragraph: The EE/CA must discuss the basis for and appropriateness of using the DCG 40-year committed effective dose equivalent limit of 4 mrem for setting a removal action limit of 33 µg/l for uranium in groundwater. This 33 µg/l limit represents approximately the 1×10^{-4} excess lifetime cancer risk level for uranium. While this may be acceptable for use in the removal action as an interim action criterion, this is well above the 1×10^{6} risk level that the NCP uses as the point of departure for assessing long-term cleanup goals and will likely be unacceptable to Ohio EPA if it used as a standard for long-term cleanup of either on-site or off-site groundwater. In addition, current USEPA risk assessment guidance requires the use of 70 years as the lifetime exposed individuals, not 50 years as is used in this EE/CA.

Response See response to OEPA Comment 7.

Comment 24. 5-5 and 5-6, Section 5.2.1: Ohio EPA strongly disagrees with DOE's statement that ". . . no imminent and substantial endangerment currently exists for any off-site receptor . . ." The Agency also disagrees with the statement that ". . . the contribution of contaminants to Paddys Run and the aquifer from storm water runoff from the waste storage area does not represent an imminent and substantial endangerment." The DOE interpretation of what constitutes "imminent and

substantial endangerment" is a much narrower interpretation than that of either Ohio EPA or CERCLA. These statements should be deleted from the text since their accuracy is very questionable.

Response The use of "no imminent and substantial endangerment" is correct, appropriate, and proper in the context of its use in the EE/CA. The statement is supported by Appendix C in the revised EE/CA, where the radiocarcinogenic risk is 1×10^{-5} for the no action alternative. Therefore, the text will remain the same for these phrases.

Comment 25. 5-6, second full paragraph: As previously stated, current USEPA risk assessment guidance requires the use of 70 years as the lifetime for exposed individuals, not 50 years.

Response See response to OEPA Comment 7.

Comment 26. Table 5-2: Ohio Revised Code 6111 should be listed as an action-specific state ARAR for the waste pit area since it prohibits pollution of "waters of the state."

Response The referenced ORC 6111 has been added as an action-specific state ARAR.

Comment 27. 5-8, 5.2.1: In paragraph one, the calculated concentration value of 80 µg/l, which exceeds the health based limit of 30 µg/l, is dismissed due to its "extreme conservatism." However, no alternative or more representative calculated concentration value is provided.

Response The comment does not appear to match the text. However, DOE will respond to the content of the comment. The concentration of 30 µg/l for uranium in drinking water is not a "health based limit." It is based on a radiation dose equal to the radiation dose for which MCLs are derived for beta and photon-emitting radioactivity under 40CFR141.16. It is a concentration that presents approximately the same health risk as the MCL for radium-226 and radium-228. Use of the term "limit" implies a threshold above a level at which health effects occur and below a level at which health effects do not occur. This is, of course, not the case. Such a threshold concentration has been determined, based on chemical toxicity of uranium, to be 105 µg/l including an additional protection factor of 1000 for the uncertainties in how the concentration is derived. Also see response to OEPA Comment 1.

Comment 28. 5-14, 5.4.1: Table 5-1 is referenced in paragraph two, which compares filtered and unfiltered water samples. The method and conditions under which these samples were filtered is not described. This information might prove to be helpful in evaluating the utility of this comparison.

Response The samples were managed in accordance with the RI/FS Sampling Plan. A single sample is selected from each location and split so that one part can be filtered before analysis and the other analyzed unfiltered. This technique, using laboratory screening analytical methods, provides a basis for determining whether potential contaminant migration is in solution or being carried off site as suspended matter.

Comment 29. 5-16, 5.4.3: The environmental benefit of Alternative 4 should include some assessment of the uranium removal capability in the Bio-D towers and subsequent activated sludge plant. Will the installation and start up of the package plant result in the sewage sludge from the old trickling filter plant gradually becoming less contaminated with radionuclides? Will routing more uranium contaminated wastewater through the Bio-D system result in more Bio-D sludge?

Response Since the Biodenitrification System and its Effluent Treatment Plant are not specifically designed for uranium removal from waste water, a conservative approach has been taken. This approach only takes credit for known uranium removals. As stated in Section 5.4.3, the degree of uranium removal in subsequent [subsequent to settling in the Biodenitrification Surge Lagoon treatment units is unknown.

The installation and start-up of the package activated sludge plant downstream of the Biodenitrification Towers will reduce the loading on the existing trickling filter plant. This is because this entire wastewater stream will no longer be sent to the existing trickling filter plant, but instead will be discharged directly to Manhole 175.

The routing of storm water runoff through the Biodenitrification system is not expected to increase Bio-d sludge. The Bio-d system is a biological system designated for nitrate removal. Since the additional storm water runoff does not increase loadings of nitrates, there should not be increased biological growth.

Comment 30. 5-17, 5.4.3: The AWWT facility is mentioned here for the removal of uranium from the wastewaters. The AWWT facility is explicitly included in Remedial Alternative 4, but not described technically (i.e., flow capacities or how it will remove uranium from the waste stream).

Response Refer to response to OEPA Comment 6.

Comment 31. 5-17, 5.4.4: There is no discussion of what the final remedial alternatives are to provide a basis for evaluating the consistency of this action. Alternatives being considered as final remedies should be presented so that it is clear what the relationship between interim and final alternatives is. As a minimum, the overall objectives of the final actions should be presented (e.g., mitigate leachate generation/migration, stabilize soils, shallow groundwater treatment) to aid in evaluating consistency.

Response A listing of the Alternatives considered for the final remediation of Operable Units 1 and 5 has been incorporated into the text.

Comment 32. 5-19, 5.4.8: The first paragraph in this section states that collection and treatment of storm water runoff has been an ongoing consideration, and that because of that a major portion of the design effort is completed. However, little specific design-related information is presented in this document regarding the AWWT facility or the hydraulic design of the collection system. If this is available, it should be provided.

Response The specific design information that is available regarding Alternative 4 is information on the collection and pumping of storm water from the waste pit perimeter area to the Biodenitrification Surge Lagoon. The same level of engineering detail is not available for the AWWT.

In an effort to give a consistent level of detail with the other alternatives considered, many of the engineering details were not included in the EE/CA. Hydraulic design information regarding the collection system is available upon specific request from DOE; however, it should be noted that the same level of detail is not available for the other alternatives.

Comment 33. 5-19, 5.4.9: This paragraph states that the biodenitrification system is already in place; however, earlier it is stated that two new towers will be constructed in addition to two existing towers, as well as the construction of a Biodenitrification

Surge Lagoon. The cost of the AWWT facility is excluded from the cost analysis for this alternative. However, it is not explained how the cost of this facility will be provided (i.e., is it included as a part of another OU remedial action, or as common part of several other remedial actions?).

Response The Biodenitrification System is currently being upgraded from a two tower system to a four tower system. The Biodenitrification Surge Lagoon is already installed and operational.

The funding for the four tower upgrade is being provided through a separate line item source. This funding is not part of any operable unit or remedial action under CERCLA, but DOE provided the funds prior to the FMPC being listed on the National Priority List.

Funding for the AWWT is also being provided for through a separate line item source. This funding is separate from the Waste Pit Area Storm Water Runoff Control Project.

Comment 34. 6-3, Table 6-1 states that no permits are required for on-site actions for Alternative 4. Our reading of DOE's plans indicates a need for a PTI for the waste pit perimeter storm water collection sump and probably the collection ditches as well, since parts are to be designed as retention structures.

Response Section 121 (e) (1) of CERCLA and Section 300.400(c) of the NCP provide for permit waivers for on-site response activities conducted under Section 104, 106, 120, 121, and 122 of CERCLA. Section XIII of the 1990 Consent Agreement is consistent with these requirements. DOE does not agree that a PTI is needed for this removal action since it is an onsite response under Section 104, 106, 120, 121, and 122 of CERCLA.

Comment 35. Appendix A - HELP MODEL OUTPUT: A discussion of the input of the HELP model should be provided in order to assess the importance of the model output for this scenario. To provide meaningful results, it is important that certain guidelines are followed in using the HELP model, such as avoiding default values and using site-specific daily precipitation values.

Response Default values were used to determine precipitation values, evapotranspiration value, vegetative type and storage capacity, soil characteristics, snow fall, porosity, and wilting point. Much of the required input data was not available and given the proximity to the data source used (Cincinnati, Ohio), it was determined to be acceptable. The HELP model in itself is a qualitative model used to determine the effectiveness of a cap design. While values could vary using site specific data, the performance of a cap in relevance with another design will be accurate.

Comment 36. Appendix B - COST ESTIMATE FOR ALTERNATIVE 4: Alternative 4 is the preferred alternative, but the cost estimate is less detailed than any of the others. The estimate is simply a summary, and does not address collection system, biodenitrification towers, AWWT facility, or operations and maintenance costs. If these costs have truly not been included, it is not clear how this cost estimate can be compared with that for Alternative 5, or any of the other alternatives.

A cost analysis for the preferred alternative in an EE/CA should be detailed enough to clearly include all major elements of the alternative. In order to provide a realistic cost comparison against other alternatives, the present worth cost for the alternative should be calculated as well.

Response The cost estimate provided for Alternative 4 is a summary sheet taken from the cost estimate prepared by A. M. Kinney for the Waste Pit Area Storm Water Runoff Control Project. This estimate addressed the collection and pumping of storm water runoff from the waste pit perimeter area. The actual estimate provides far more detail than is provided in any cost information for the Biodenitrification System upgrade for the Waste Pit Area Storm Water Runoff Control Project.

Details regarding the funding of the AWWT and the upgrade of the biodenitrification system were covered under the response to OEPA Comment 33.

The detailed engineering estimate is included as an attachment to these comments and responses. The present worth of the alternative is shown in Table ES-1 of the Executive Summary.

GENERAL COMMENTS

Comment 37. Has DOE considered the possibility of using a uranium removal system on the water taken from the Bio-D lagoon? Because of relatively low flow (100 gpm) from this lagoon, a pilot project could reduce overall uranium discharge from the site and provide valuable treatment information for other removal and remedial actions. Please discuss.

Response A pilot scale treatment plant is scheduled to be installed on the FMPC main discharge point to demonstrate the feasibility of using available technologies to treat FMPC wastewater. This system will also provide data on the performance of these technologies and provide basic design information relative to a full scale treatment system. This system is capable of treating approximately 10 gpm. This system will be retained onsite for treating wastewater at the Biodenitrification Surge Lagoon.

Comment 38. It seems clear, especially since DOE is currently in violation of their own uranium discharge limitations, that this and other removal actions need to include a proposal to reduce overall uranium discharges than just increase them.

Response DOE is proposing to reduce overall uranium discharges. A pilot scale waste water treatment system facility will be installed as part of Alternative 4 to demonstrate technologies applicable to the AWWT. The demonstration unit will be designed to treat 10 gpm of wastewater discharged from the Biodenitrification Surge Lagoon (BSL) with an initial concentration of total uranium of 1 ppm to a final effluent concentration of 20 ppb. The facility will be brought on line by the end of the first quarter of 1991 (i.e. March 1991).

R. ROPPEL

406

REFER TO EPA COMMENTS #184 & #186

Westinghouse
Materials Company
of Ohio

PO Box 398704
Cincinnati, Ohio 45239-8704

(513) 738 6200

GUIDELINES FOR CONSTRUCTION ESTIMATES

F M P C

RAY ROPPEL (738-6486)

AUGUST 1, 1989

TOTAL SAFETY TSA Attitude

66

GUIDELINES FOR THE PACKAGING OF CONTAMINATED METAL AND WOOD REFUSE

1. METAL CONTAINERS - METAL & WOOD REFUSE

(a) Estimated density of metal and wood refuse - 35 lbs/ft^3
Based on previous estimates of waste density (See Page 6)

(b) Size of fabricated metal container

- Outside dimensions - 43" high x 53" wide x 77" long
- Inside dimensions - 38" high x 52" wide x 76" long

(c) Volume capacity based on inside dimensions = 87 ft^3

(d) Estimated weight of metal and wood refuse (full container)
87 ft^3 x 35#/ft^3 = 3,045 lbs

(e) The maximum payload for this size metal container has been established as 5,340 lbs. The basis for this figure is that the present plant forklift capacity of 6,000 lbs. The empty container is established to weigh 660 lbs.

6,000 lbs - 660 lbs = 5,340 lbs maximum payload (metal & wood refuse). Maximum loaded weight specified by Container Products Corp. is 6,660 lbs.

(f) The maximum weight of a container filled with metal and wood refuse (35#/ft^3)

3,045 lbs (87 ft^3 x 35#/ft^3) + 660 lbs (weight of empty container) = 3,705 lbs.

(g) The number of containers required for a given amount of metal and wood refuse (lbs) is:

Total lbs ÷ 3,045 = ____ number of containers.

(h) The maximum number of containers per truck shipment (maximum payload of 42,000 lbs per truck ÷ 3,705 lbs = 11.3. Use ten (10) containers per truck. Ten (10) of the above containers should fit into and be secured within a 48' long truck.

GUIDELINES FOR PACKAGING OF CONTAMINATED METAL AND WOOD REFUSE

2. SEA/LAND CONTAINER - METAL & WOOD REFUSE
(Fabricated, reinforced metal container)

(a) Size

- Outside dimensions - 8'0" x 8'0" x 20'0"
- Outside dimensions - 96" x 96" x 240"
- Outside dimensions - Vol. 1,280 ft^3 for burial cost estimate
- Inside dimensions - 90" x 90" x 234"
- Inside volume - 1,097 ft^3

(b) Weight of empty container - 5,000 lbs.

(c) Rated gr. wgt. of container: container + cargo = 44,800 lbs.

(d) Recommended gross weight to be set at 42,000 lbs.

(e) Maximum payload of refuse = 42,000 - 5,000 = 37,000 lbs.

METHODS FOR LOADING SEA/LAND CONTAINERS
(Maximum weight 42,000 lbs.)

(a) Presently - by mobile cranes, moved in and out of plant.

(b) Planned - by heavy duty forklift - max. capacity, 52,000 lbs.
(to be procured by date. *_____-)

NUMBER OF SEA/LAND CONTAINERS PER TRUCK SHIPMENT
(Maximum payload weight per truck - 42,000 lbs.)(See Att. 4)

(a) Only one fully loaded Sea/Land container can be shipped per truck. However, experience has shown that most Sea/Land containers loaded with metal and wood refuse weigh less than 20,000 lbs. In these cases, two Sea/Land containers may be shipped if combined weight is less than 42,000 lbs in a single shipment.

(b) Maximum amount of metal and wood refuse that can be shipped per container is 37,000 lbs.

37,000 lbs ÷ 35 lbs/ft^3 of refuse - 1,057 ft^3

1,057 ft^3 is maximum volume of rubble that can be shipped in a Land/Sea container.

GUIDELINES FOR THE PACKAGING OF CONTAMINATED SOIL (DIRT AND CONCRETE)

3. METAL CONTAINERS - CONTAMINATED SOIL

(a) Estimated density of soil (dirt & concrete) - 125 lbs/ft^3

(b) Size of Metal Container

- Outside Dimensions - 43" high x 53" wide x 77" long
- Outside Volume - 3.58' x 4.41' x 6.41' = 101.5 ft^3
  - Use 102 ft^3 volume for burial cost estimate

(c) Maximum payload for above size container is 5,340 lbs. Gross weight not to exceed 6,000 lbs (limit of forklift capacity).

(d) Maximum volume of soil that can be loaded into containers is:

5,340 ÷ 125#/ft^3 = 42.7 ft^3
(Use 42 ft^3 as maximum)

(e) The maximum number of full containers that can be loaded onto truck is:

42,000 lbs ÷ 6,000 = 7 containers per truck
(42,000# maximum limit of load on truck)

NOTES:

(1) Based on the relatively high density of soil (dirt and concrete) 125#/ft^3 - it is recommended that the Sea/Land containers <u>NOT</u> be used for shipping contaminated soil.

(2) It is considered more practical to utilize the metal containers (capacity of 87 ft^3) for contaminated soil.

(3) The maximum volume of soil that could be loaded on a Sea/Land container would only be 296 ft^3 (37,000 ÷ 125 = 296) of the 1,097 ft^3 available volume.

(4) The Sea/Land container should be utilized for metal and wood refuse and asbestos only.

(5) The data listed in this attachment was developed and compiled with the cooperative effort of R. Kasparek of Waste Technology.

456 (6)

APPENDIX "D"
(WMCO:CE:88-218)
Dated 7/19/88

SECTION 1.4

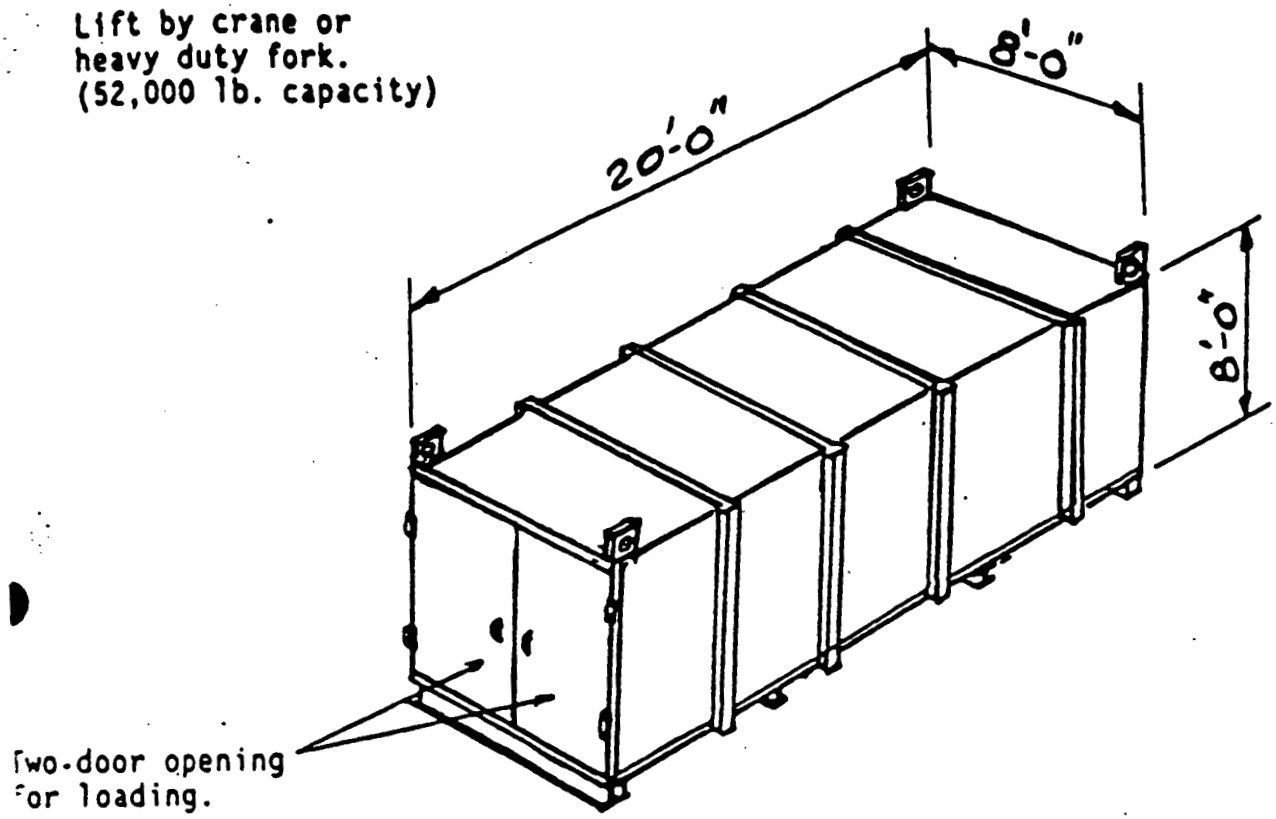

SEA/LAND CONTAINER
Size 8'-0"w x 8'-0"h x 20-0"lg.
Weight - empty - 5,000 lbs.
Payload - Metal & Wood Refuse - Max. = 37,000 lbs.
Max. loaded weight = 42,000 lbs.
Use for metal & wood refuse only (35#/ft^3)
Do not use for soil (dirt & concrete) (125#/ft^3)
Inside Volume = 1,097 cu. ft. - 40CY
Outside Volume = 1,280 cu. ft.

6 DRUM OVERPACK (12 GA) CONTAINER

DIMENSIONS (INCHES)	INTERIOR	EXTERIOR
HEIGHT	38	42 7/8
WIDTH	52	52 15/16
LENGTH	76	76 15/16

SECTION 1.5

DESCRIPTION

Classification	-	Strong Tight Container
Package Type	-	Container
Capacity	-	87 cu. ft.
Material	-	12 ga. ASTM A569 low carbon hot rolled steel
Gross wt. (empty)	-	660 lbs.
Payload	-	6,000 lbs.
Max. loaded wt.	-	6,660 lbs.
Shielding	-	Optional

Note: 87 Ft³ Inside
102 Ft³ Burial

ADDITIONAL INFORMATION

- Meets strong tight container requirements for LSA material.
- Exclusive "seal-loc" positive closure system to preclude inadvertent opening.
- Final protective finish to meet customer requirements.

U.S. PATENT NO. 4371092

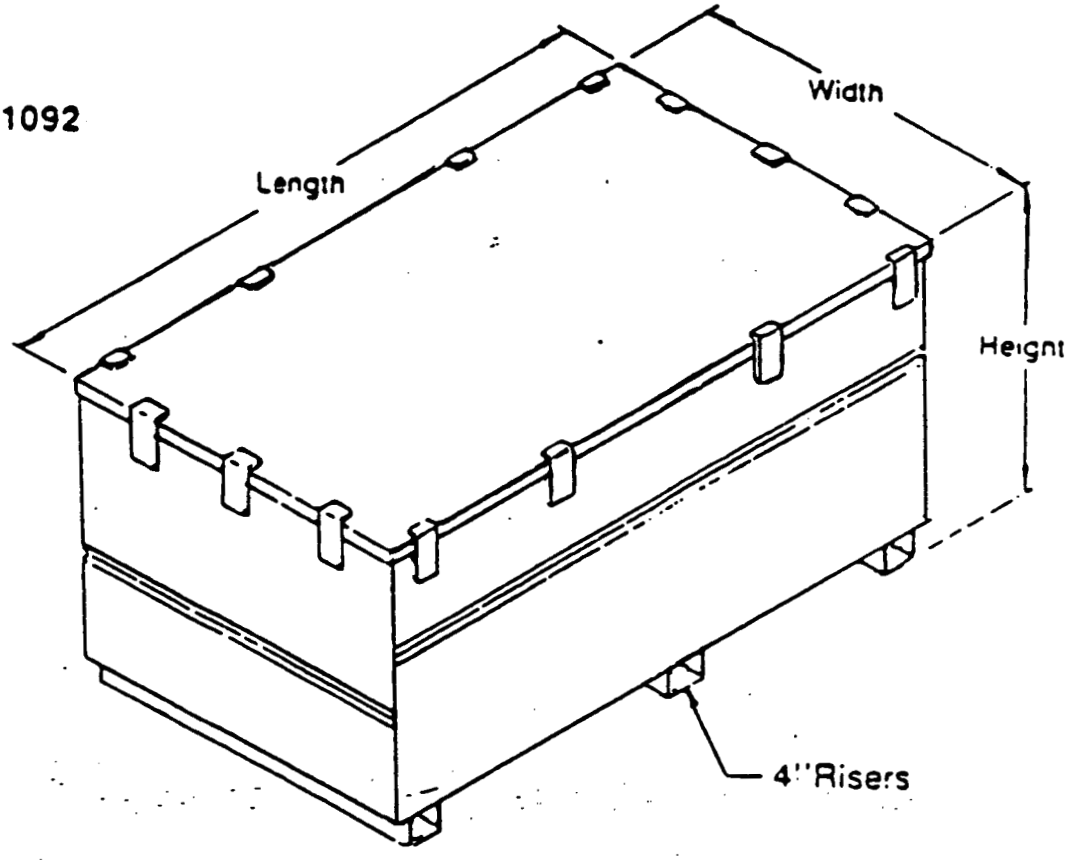

6 DRUM OVERPACK (12 GA) CONTAINER

CONTAINER PRODUCTS CORPORATION P.O. Box 3767 • Wilmington, NC 28406 919-392-6100

ASSUMPTIONS FOR CONSTRUCTION WASTE PACKAGING

CONTAINER	WASTE	WASTE lbs / BOX	WASTE VOL. / BOX (ft^3)	WASTE DENSITY / BOX lb/ft^3	# BOXES / SHIPMENT	WASTE VOL. / SHIPMENT
METAL BOX	DIRT/CONCRETE	6000	48	125	6	288
	REFUGE METAL/WOOD	3000	87	35	12	1044
SEA/LAND	REFUGE METAL/WOOD	18,500	1100	17	2	2200

This sheet was taken from a report prepared by J. Grymski. The waste density of 35#/ft^3 for metal and wood refuse was used in the calculations to determine the number of containers for shipment.

(WMCO:CE:88-218)
Dated 7/19/88
APPENDIX-"D"
SECTION 1.6

456

(8)

2

DOE Response to: 456

OEPA # 36 &
EPA # 185

A. M. KINNEY, INC.
CONSULTING ENGINEERS

COST ESTIMATE

100% REVIEW ISSUE

DESIGN REVIEW

FOR

ENVIRONMENTAL, HEALTH AND SAFETY IMPROVEMENTS

PHASE IV - VOLUME 3

TWO FISCAL YEAR 1990 SUBPROJECTS

PART I

WASTEWATER TREATMENT IMPROVEMENTS - PLANTWIDE (WBS 1.1.2.4.01)
TASK 1 - WASTE PIT AREA STORM WATER RUNOFF CONTROL IMPROVEMENTS

PREPARED FOR:

WESTINGHOUSE MATERIALS COMPANY OF OHIO
FEED MATERIALS PRODUCTION CENTER
FERNALD, OHIO

Project No. 87-D-159

Contract No. N-77207

November 2, 1989

Prepared by

A. M. KINNEY, INC.
CONSULTING ENGINEERS
CINCINNATI, OHIO

73

A. M. KINNEY, INC.
CONSULTING ENGINEERS

COST ESTIMATE

This "Waste Pit Area Storm Water Runoff Control Improvement" Estimate assumes a General Contractor will be the Prime Contractor with three Subcontractors working under him. These three subcontractors are Fencing Mechanical and Electrical contractors with the Electrical Contractor having an Instrumentation Contractor working under him as a Sub-subcontractor.

The major work of these five contractors will be to furnish and install a Concrete Sump and Pump Station, Miscellaneous Inlet Structures, 1,990 LF of various sizes of RCP Culverts and 2,236 LF of various sizes of Concrete Trenches. In addition they will furnish and install four Sump Pumps, a Flexible Membrane Liner for the Biodenitrification Surge Lagoon Storm Water Inlet Trough, a Process Effluent Line plus some Electrical work and some incidental Instrumentation.

The major cost drives are the, "Concrete Sump and Pump Station" the "Miscellaneous Inlet Structures," the "RCP Culverts" and the "Concrete Trenches."

The main sources used in pricing the estimate were the cost data bases put out by R. S. Means and Richardson that were adjusted for this location. The "Piping" unit prices in the R. S. Means data base include such activities as "Cleaning," "Testing" and the Labor for "Identifying" the various Pipe Lines. Telephone quotations were obtained for some of the items in the estimate.

The "Direct" and "Indirect" markups that were used in the estimate are noted in Appendix "C."

These markups are within the percentage range given to AMK by WMCO.

The Engineering document that the estimate was made from is the 100% Design Review Submittal.

A. M. KINNEY, INC.
CONSULTING ENGINEERS

Attached is a sheet called Appendix "A," showing the wage rates given to AMK by R. K. Roppel of WMCO dated July 12, 1989. Some mixed crew rates were used using the base rates shown on the sheet.

Escalation of 5.0 percent was used, using the first quarter of fiscal year 1991 as the midpoint of construction, per attached Appendix "B," a letter from James A. Reafsnyder of DOE dated September 27, 1989.

Backup for the percentage markups used on the various contractor totals is shown in Appendix "C."

Appendix "D" is the backup for the J.C.F. percentages used in the various contractor percentage markups.

A contingency of 10 percent was used per instructions in attached Appendix "E" from a set of documents sent to AMK by WMCO titled "FMPC Guidelines for A-E Construction Estimates."

Backup for the Decontamination and Disposal Costs are shown in Appendix "F."

THE A.M. KINNEY AFFILIATION
ESTIMATE SUMMARY

DATE: 02NOV89
CLIENT: DOE/WMCO
CLIENT NO.: 02902-33

PAGE NO.

PAGE NO.: 1
PROJECT NAME: WST PIT RNF CTRL-100% EST
PROJECT LOCATION: FERNALD, OHIO

ITEM DESCRIPTION		$TOTAL
ESTIMATE SUMMARY		
GENERAL CONTRACT-PRIME	20	699,391
FENCING SUBCONTRACT	23	7,366
MECHANICAL SUBCONTRACT	33	204,401
ELECTRICAL SUBCONTRACT	38	87,185
INSTRUMENT'N SUB-SUBCONTRACT	40	24,613
SUBTOTAL		1,022,956
RUST CONSTRUCTION MGT. @ 24%		245,509
SUBTOTAL		1,268,465
SALES TAX		0
SHIPMENT TO NEVADA TEST SITE		546,000
SUBTOTAL		1,814,465
ESCALATION TO 1QFY91 @ 5%		90,723
SUBTOTAL		1,905,188
CONTINGENCY @ 10%		190,519
PROJECT TOTAL		2,095,707

THE A.M. KINNEY AFFILIATION
ESTIMATE DETAILS

DATE: 02NOV89 CLIENT: DOE/WMCO PROJECT NAME: WST PIT RNF CTRL-100% EST PAGE NO.: 2
CLIENT NO.: 02902-33 PROJECT LOCATION: FERNALD, OHIO BY: JJB

CODES/SEQ TAG	DESCRIPTION	QUANT / UNIT SIZE	LABOR HOURS	$LABOR	$FIELD	$OWNER	$SUBCON	$TOTAL
KEY1: GENERAL CONTRACT-PRIME		KEY3: 2004-ROADS.WALKS.PAVEMENT						
KEY2: 2000-IMPROVEMENTS TO LAND		OPT3: 101-EXCVN..GRADE.BACKFILL						
01 02 2004 0005	ROAD EXCAVATION	100 CY	5 XB1	121	106	0	0	227
1012004			(.05)	(1.21)	(1.06)	(0.00)	(0.00)	(2.27)
01 02 2004 0010	ROAD BACKFILL	600 CY	10 XB1	243	216	0	0	459
1012004			(.017)	(.41)	(.36)	(0.00)	(0.00)	(.77)
01 02 2004 0015	12" STRIPPING FOR ROADWAY (4560 SF)	170 CY	2 XB1	49	109	0	0	158
1012004			(.012)	(.29)	(.64)	(0.00)	(0.00)	(.93)
01 02 2004 0020	EXCAVATION FOR CONCRETE CURB (ASSUME 5 CY OF CONTAMINATED SOIL WILL BE SENT TO NEVADA)	40 CY	3 XJ1	71	54	0	0	125
1012004			(.075)	(1.78)	(1.35)	(0.00)	(0.00)	(3.13)
01 02 2004 0025	BACKFILL FOR CONCRETE CURB	10 CY	8 LA1	173	0	0	0	173
1012004			(.80)	(17.30)	(0.00)	(0.00)	(0.00)	(17.30)
	101-EXCVN..GRADE.BACKFILL:		28	657	485	0	0	1,142

THE A.M. KINNEY AFFILIATION
ESTIMATE DETAILS

DATE: 02NOV89 CLIENT: DOE/WMCO PROJECT NAME: WST PIT RNF CTRL-100% EST PAGE NO.: 3
CLIENT NO.: 02902-33 PROJECT LOCATION: FERNALD, OHIO BY: JJB

CODES/SEQ TAG	DESCRIPTION	QUANT / UNIT SIZE	LABOR HOURS	$LABOR	$FIELD	$OWNER	$SUBCON	$TOTAL
KEY1: GENERAL CONTRACT-PRIME		KEY3: 2004-ROADS,WALKS,PAVEMENT						
KEY2: 2000-IMPROVEMENTS TO LAND		OPT3: 102-SURFACING						
01 02 2004 0030	6" GRAVEL SURFACE COURSE	85 CY	5 XK1	116	1944	0	0	2.060
	(4560 SF)		(.059)	(1.361)	(22.871)	(0.001)	(0.001)	(24.24)
1022004								
		102-SURFACING:	5	116	1944	0	0	2.060

THE A.M. KINNEY AFFILIATION
ESTIMATE DETAILS

DATE: 02NOV89 | CLIENT: DOE/WMCO | PROJECT NAME: WST PIT RNF CTRL-100% EST | PAGE NO.: 6
CLIENT NO.: 02902-33 | PROJECT LOCATION: FERNALD, OHIO | BY: JJB

CODES/SEQ TAG	DESCRIPTION	QUANT / UNIT SIZE	LABOR HOURS	$LABOR	$FIELD	$OWNER	$SUBCON	$TOTAL
KEY1: GENERAL CONTRACT-PRIME		KEY3: 2004-ROADS.WALKS.PAVEMENT						
KEY2: 2000-IMPROVEMENTS TO LAND		OPT3: 105-CURBS						
01 02 2004 0035	INSTALL CONCRETE CURB	700 LF	297 XI1	6929	3724	0	0	10.653
	(2.5'x.5'x700') 55 CY		(.424)	(9.90)	(5.32)	(0.00)	(0.00)	(15.22)
1052004	INCLUDES 4"x2' GUTTER AND 875# OF REINFORCING							
		105-CURBS:	297	6929	3724	0	0	10.653
		2004-ROADS.WALKS.PAVEMENT:	330	7702	6153	0	0	13,855

THE A.M. KINNEY AFFILIATION
ESTIMATE DETAILS

DATE: 22NOV89 CLIENT: DOE/WMCO PROJECT NAME: WST PIT RNF CTRL-100% EST PAGE NO.: 5
CLIENT NO.: 22922-33 PROJECT LOCATION: FERNALD, OHIO BY: JJB

CODES/SEQ TAG	DESCRIPTION	QUANT / UNIT SIZE	LABOR HOURS	$LABOR	$FIELD	$OWNER	$SUBCON	$TOTAL
KEY1: GENERAL CONTRACT-PRIME		KEY3: 2006-STORM SEWERS/DITCHES						
KEY2: 2000-IMPROVEMENTS TO LAND		OPT3: 101-INSTALLED EQUIPMENT						
01 02 2006 0005	JIB CRANE, 1/2 TON WITH	1 EA	8 IW1	202	2700	0	0	2.902
	20' BOOM AND MANUAL		(8.00)	(202.00)	(2700.00)	(0.00)	(0.00)	(2902.00)
1012006	TROLLEY. YALE J9068 OR							
	EQUAL FOR SUMP							
	101-INSTALLED EQUIPMENT:		8	202	2700	0	0	2.902

THE A.M. KINNEY AFFILIATION
ESTIMATE DETAILS

DATE: 02NOV89 CLIENT: DOE/WMCO PROJECT NAME: WST PIT RNF CTRL-100% EST PAGE NO.: 6
CLIENT NO.: 02902-33 PROJECT LOCATION: FERNALD, OHIO BY: JJB

CODES/SEQ TAG	DESCRIPTION	QUANT / UNIT SIZE	LABOR HOURS	$LABOR	$FIELD	$OWNER	$SUBCON	$TOTAL
KEY1: GENERAL CONTRACT-PRIME		KEY3: 2006-STORM SEWERS/DITCHES						
KEY2: 2000-IMPROVEMENTS TO LAND		OPT3: 102-EXCAVATION & BACKFILL						
01 02 2006 0010	EXCAVATION FOR SUMP	4984 CY	503 XM1	11408	12161	0	0	23,569
	(INCLUDING PILING AND		(.101)	(2.29)	(2.44)	(0.00)	(0.00)	(4.73)
1022006	DEWATERING)							
01 02 2006 0015	BACKFILL FOR SUMP	1834 CY	22 XB1	534	459	0	0	993
			(.012)	(.29)	(.25)	(0.00)	(0.00)	(.54)
1022006								
01 02 2006 0020	COMPACTION FOR SUMP	1834 CY	70 LA1	1515	440	0	0	1,955
			(.038)	(.83)	(.24)	(0.00)	(0.00)	(1.07)
1022006								
01 02 2006 0025	EXCAVATION FOR MISC.	20 CY	1 XB1	24	12	0	0	36
	STRUCTURES		(.05)	(1.20)	(.60)	(0.00)	(0.00)	(1.80)
1022006								
01 02 2006 0030	BACKFILL FOR MISC.	50 CY	1 XB1	24	13	0	0	37
	STRUCTURES		(.02)	(.48)	(.26)	(0.00)	(0.00)	(.74)
1022006								
01 02 2006 0035	COMPACTION FOR MISC.	50 CY	2 LA1	43	12	0	0	55
	STRUCTURES		(.04)	(.86)	(.24)	(0.00)	(0.00)	(1.10)
1022006								
01 02 2006 0040	MISC. CUT AROUND SUMP	10 CY	0 XB1	0	6	0	0	6
			(0.00)	(0.00)	(.60)	(0.00)	(0.00)	(.60)
1022006								
01 02 2006 0045	MISC. FILL AROUND SUMP	80 CY	1 XB1	24	20	0	0	44
			(.013)	(.30)	(.25)	(0.00)	(0.00)	(.55)
1022006								
01 02 2006 0050	EXCAVATION FOR 36" DIA.	35 LF	6 XS1	136	147	0	0	283
	CONCRETE PIPE CULVERT		(.171)	(3.89)	(4.20)	(0.00)	(0.00)	(8.09)
1022006								

THE A.M. KINNEY AFFILIATION
ESTIMATE DETAILS

DATE: 02NOV89 CLIENT: DOE/WMCO PROJECT NAME: UST PIT RNF CTRL-100% EST PAGE NO.: 7
CLIENT NO.: 02902-33 PROJECT LOCATION: FERNALD, OHIO BY: JJB

KEY1: GENERAL CONTRACT-PRIME KEY3: 2006-STORM SEWERS/DITCHES
KEY2: 2000-IMPROVEMENTS TO LAND OPT3: 122-EXCAVATION & BACKFILL

CODES/SEQ TAG	DESCRIPTION	QUANT / UNIT SIZE	LABOR HOURS	$LABOR	$FIELD	$OWNER	$SUBCON	$TOTAL
01 02 2006 0055	BACKFILL FOR 36" DIA. CONCRETE PIPE CULVERT							
1022006	(INCLUDES COMPACTION) (INCLUDED IN EXCAVATION)							
01 02 2006 0060	EXCAVATION FOR 36" DIA. CMP PIPE CULVERT	15 CY	0 XB1	0	9	0	0	9
			(0.00)	(0.00)	(.60)	(0.00)	(0.00)	(.60)
1022006								
01 02 2006 0065	BACKFILL FOR 36" DIA. CMP PIPE CULVERT	300 CY	13 XB1	315	264	0	0	579
			(.043)	(1.05)	(.88)	(0.00)	(0.00)	(1.93)
1022006	(INCLUDES COMPACTION)							
01 02 2006 0070	EXCAVATION FOR 30" DIA. RCP	680 LF	204 XS1	4608	5596	0	0	10.204
			(.30)	(6.78)	(8.23)	(0.00)	(0.00)	(15.01)
1022006								
01 02 2006 0075	BACKFILL FOR 30" DIA. RCP (INCLUDES COMPACTION)							
1022006	(INCLUDED IN EXCAVATION)							
01 02 2006 0080	EXCAVATION FOR 21" DIA CONCRETE PIPE	810 LF	326 XS1	7364	10012	0	0	17.376
			(.402)	(9.09)	(12.36)	(0.00)	(0.00)	(21.45)
1022006								
01 02 2006 0085	BACKFILL FOR 21" DIA. CONCRETE PIPE							
1022006	(INCLUDES COMPACTION) (INCLUDED IN EXCAVATION)							
01 02 2006 0090	EXCAVATION FOR 12" RCP	395 LF	103 XS1	2327	2587	0	0	4.914
			(.261)	(5.89)	(6.55)	(0.00)	(0.00)	(12.44)
1022006								

THE A.M. KINNEY AFFILIATION
ESTIMATE DETAILS

DATE: 02NOV89 CLIENT: DOE/WMCO PROJECT NAME: WST PIT RNF CTRL-100% EST PAGE NO.: 8
CLIENT NO.: 02902-33 PROJECT LOCATION: FERNALD, OHIO BY: JJB

KEY1: GENERAL CONTRACT-PRIME KEY3: 2006-STORM SEWERS/DITCHES
KEY2: 2000-IMPROVEMENTS TO LAND OPT3: 102-EXCAVATION & BACKFILL

CODES/SEQ TAG	DESCRIPTION	QUANT / UNIT SIZE	LABOR HOURS	$LABOR	$FIELD	$OWNER	$SUBCON	$TOTAL
01 02 2006 0095	BACKFILL FOR 12" RCP (INCLUDES COMPACTION)							
1022006	(INCLUDED IN EXCAVATION)							
01 02 2006 0100	TRENCH EXCAVATION	995 LF	22 XS1	497	557	0	0	1,054
	(TRENCHES A,B,C,D)		(.022)	(.50)	(.56)	(0.00)	(0.00)	(1.06)
1022006								
01 02 2006 0105	TRENCH BACKFILL AND COMPACTION							
1022006	(TRENCHES A,B,C,D)							
	(INCLUDED IN EXCAVATION)							
01 02 2006 0110	GENERAL FILL FOR TRENCH D	50 CY	1 XB1	24	201	0	0	225
	(ASSUME THIS TO BE BORROW		(.02)	(.48)	(4.02)	(0.00)	(0.00)	(4.50)
1022006	FROM A PLANT STOCKPILE)							
01 02 2006 0115	TRENCH EXCAVATION	1130 LF	26 XS1	587	644	0	0	1,231
	(TRENCHES E & F)		(.023)	(.52)	(.57)	(0.00)	(0.00)	(1.09)
1022006								
01 02 2006 0120	TRENCH BACKFILL AND COMPACTION							
1022006	(TRENCHES E & F)							
	(INCLUDED IN EXCAVATION)							
01 02 2006 0125	GENERAL FILL FOR TRENCH E	300 CY	7 XB1	170	1203	0	0	1,373
	(ASSUME THIS TO BE BORROW		(.023)	(.57)	(4.01)	(0.00)	(0.00)	(4.58)
1022006	FROM A PLANT STOCKPILE)							
01 02 2006 0130	TRENCH EXCAVATION (G)	73 LF	2 XS1	45	47	0	0	92
			(.027)	(.62)	(.64)	(0.00)	(0.00)	(1.26)
1022006								

THE A. M. KINNEY AFFILIATION
ESTIMATE DETAILS

DATE: 02NOV89 CLIENT: DOE:WMCO PROJECT NAME: WST PIT RNF CTRL-100% EST PAGE NO.: 9
CLIENT NO.: 02902-33 PROJECT LOCATION: FERNALD, OHIO BY: JJB

CODES/SEQ TAG	DESCRIPTION	QUANT / UNIT SIZE	LABOR HOURS	$LABOR	$FIELD	$OWNER	$SUBCON	$TOTAL
KEY1: GENERAL CONTRACT-PRIME		KEY3: 2006-STORM SEWERS/DITCHES						
KEY2: 2000-IMPROVEMENTS TO LAND		OPT3: 102-EXCAVATION & BACKFILL						
01 02 2006 0135	TRENCH BACKFILL (G) (INCLUDES COMPACTION)							
1022006	(INCLUDED IN EXCAVATION)							
01 02 2006 0140	EXCAVATION FOR DITCH	155 CY	5 X81	121	95	0	0	216
	2' DEEP W/3:1 SIDE SLOPES		(.032)	(.78)	(.61)	(0.00)	(0.00)	(1.39)
1022006	2' BOTTOM WIDTH x 262' LG							
01 02 2006 0145	CONTAMINATED SOIL-330 CY (THIS CONTAMINATED SOIL							
1022006	FROM VARIOUS TRENCH EXC. WILL BE SENT TO NEVADA)							
	102-EXCAVATION & BACKFILL:		1315	29766	34485	0	0	64.251

THE A. M. KINNEY AFFILIATION
ESTIMATE DETAILS

DATE: 02NOV89 CLIENT: DOE/WMCO PROJECT NAME: WST PIT RNF CTRL-100% EST PAGE NO.: 10
CLIENT NO.: 02902-33 PROJECT LOCATION: FERNALD, OHIO BY: JJB

CODES/SEQ TAG	DESCRIPTION	QUANT / UNIT SIZE	LABOR HOURS	$LABOR	$FIELD	$OWNER	$SUBCON	$TOTAL
KEY1: GENERAL CONTRACT-PRIME		KEY3: 2006-STORM SEWERS/DITCHES						
KEY2: 2000-IMPROVEMENTS TO LAND		OPT3: 103-CATCH BASINS/MANHOLES						
01 02 2006 0150	CONCRETE HEADWALLS (2)	2 EA	80 XQ1	1821	774	0	0	2,595
	FOR 36" DIA. CONCRETE		(40.00)	(910.50)	(387.00)	(0.00)	(0.00)	(1297.50)
1032006	PIPE CULVERT							
01 02 2006 0155	CONCRETE HEADWALLS (2)	2 EA	80 XQ1	1821	774	0	0	2,595
	FOR 36" DIA. CMP PIPE		(40.00)	(910.50)	(387.00)	(0.00)	(0.00)	(1297.50)
1032006	CULVERT							
01 02 2006 0160	CONCRETE HEADWALLS (2)	2 EA	68 XQ1	1548	612	0	0	2,160
	FOR 30" DIA. RCP		(34.00)	(774.00)	(306.00)	(0.00)	(0.00)	(1080.00)
1032006								
01 02 2006 0165	WINGWALL (CONCRETE)	5 CY	40 XQ1	910	800	0	0	1,710
	(TRENCH G)		(8.00)	(182.00)	(160.00)	(0.00)	(0.00)	(342.00)
1032006								
01 02 2006 0170	INSTALL MANHOLE	1 EA	19 XQ1	436	1007	0	0	1,443
	(4' DIA. x 10' DEEP WITH		(19.00)	(436.00)	(1007.00)	(0.00)	(0.00)	(1443.00)
1032006	INLET FRAME AND GRATE)							
01 02 2006 0175	INSTALL MANHOLE	2 EA	41 XQ1	941	2155	0	0	3,096
	(4' DIA. x 11' DEEP) WITH		(20.50)	(470.50)	(1077.50)	(0.00)	(0.00)	(1548.00)
1032006	INLET FRAME AND COVER							
01 02 2006 0180	INSTALL (2) CURB INLETS	2 EA	24 XP1	550	610	0	0	1,160
	(4'x 2'-6" x 12" DEEP)		(12.00)	(275.00)	(305.00)	(0.00)	(0.00)	(580.00)
1032006								
	103-CATCH BASINS/MANHOLES:		352	8027	6732	0	0	14,759

THE A.M. KINNEY AFFILIATION
ESTIMATE DETAILS

DATE: 02NOV89 CLIENT: DOE/WMCO PROJECT NAME: WST PIT RNF CTRL-100% EST PAGE NO.: 11
CLIENT NO.: 02902-33 PROJECT LOCATION: FERNALD, OHIO BY: JJB

KEY1: GENERAL CONTRACT-PRIME KEY3: 2006-STORM SEWERS/DITCHES
KEY2: 2000-IMPROVEMENTS TO LAND OPT3: 104-PIPING

CODES/SEQ TAG	DESCRIPTION	QUANT / UNIT SIZE	LABOR HOURS	$LABOR	$FIELD	$OWNER	$SUBCON	$TOTAL
01 02 2006 0185	INSTALL NEW 36" DIA.	30 LF	24 XQ1	546	1056	0	0	1,602
	CONCRETE PIPE CULVERT		(.80)	(18.20)	(35.20)	(0.00)	(0.00)	(53.40)
1042006								
01 02 2006 0190	INSTALL NEW 36" DIA.	45 LF	19 XQ1	432	1239	0	0	1,671
	CMP PIPE CULVERT		(.422)	(9.60)	(27.53)	(0.00)	(0.00)	(37.13)
1042006								
01 02 2006 0195	INSTALL 30" DIA. RCP	710 LF	355 XN1	8169	21300	0	0	29,469
			(.50)	(11.51)	(30.00)	(0.00)	(0.00)	(41.51)
1042006								
01 02 2006 0200	INSTALL 21" DIA.	810 LF	148 XN1	3405	6804	0	0	10,209
	CONCRETE PIPE		(.183)	(4.20)	(8.40)	(0.00)	(0.00)	(12.60)
1042006								
01 02 2006 0205	INSTALL 12" DIA. RCP	395 LF	44 XN1	1012	2307	0	0	3,319
			(.111)	(2.56)	(5.84)	(0.00)	(0.00)	(8.40)
1042006								
01 02 2006 0210	CONCRETE TRENCH ("A")	230 LF	85 XR1	2076	2249	0	0	4,325
	1'WDx2'DPx230' (6" WALLS)		(.37)	(9.03)	(9.78)	(0.00)	(0.00)	(18.80)
1042006	INCLUDES REINFORCING.							
	FORMS - 25 CY							
01 02 2006 0215	CONCRETE TRENCH ("B")	530 LF	165 XR1	4029	4251	0	0	8,280
	1'WDx1.5'DPx530'(6"WALLS)		(.311)	(7.60)	(8.02)	(0.00)	(0.00)	(15.62)
1042006	INCLUDES REINFORCING.							
	FORMS - 50 CY							
01 02 2006 0220	CONCRETE TRENCH ("B")	20 LF	7 XR1	171	170	0	0	341
	2'WDx1.5'DPx20' (6"WALLS)		(.35)	(8.55)	(8.50)	(0.00)	(0.00)	(17.05)
1042006	INCLUDES REINFORCING.							
	FORMS - 2 CY							

THE A.M. KINNEY AFFILIATION
ESTIMATE DETAILS

DATE: 02NOV89 CLIENT: DOE/WMCO CLIENT NO.: 02902-33 PROJECT NAME: WST PIT RNF CTRL-100% EST PROJECT LOCATION: FERNALD, OHIO PAGE NO.: 12 BY: JJB

KEY1: GENERAL CONTRACT-PRIME KEY3: 2006-STORM SEWERS/DITCHES
KEY2: 2000-IMPROVEMENTS TO LAND OPT3: 104-PIPING

CODES/SEQ TAG	DESCRIPTION	QUANT / UNIT SIZE	LABOR HOURS	$LABOR	$FIELD	$OWNER	$SUBCON	$TOTAL
01 02 2006 0225	CONCRETE TRENCH ('C')	100 LF	52 XR1	1270	1388	0	0	2,658
	1'WDx2.25'Dx100'(6'WALLS)		(.52)	(12.70)	(13.88)	(0.00)	(0.00)	(26.58)
1042006	INCLUDES REINFORCING,							
	FORMS - 15 CY							
01 02 2006 0230	CONCRETE TRENCH ('D')	105 LF	72 XR1	1758	2000	0	0	3,758
	2'WDx3'DPx105' (6'WALLS)		(.686)	(16.74)	(19.05)	(0.00)	(0.00)	(35.79)
1042006	INCLUDES REINFORCING,							
	FORMS - 20 CY							
01 02 2006 0235	CONCRETE TRENCH ('D')	10 LF	7 XR1	171	200	0	0	371
	2.5'WDx3'DPx10' (6'WALLS)		(.70)	(17.10)	(20.00)	(0.00)	(0.00)	(37.10)
1042006	INCLUDES REINFORCING,							
	FORMS - 2 CY							
01 02 2006 0240	CONCRETE TRENCH ('D')	38 LF	25 XR1	611	700	0	0	1,311
	2'WDx3.1'DPx38' (6'WALLS)		(.658)	(16.08)	(18.42)	(0.00)	(0.00)	(34.50)
1042006	INCLUDES REINFORCING,							
	FORMS - 7 CY							
01 02 2006 0245	CONCRETE TRENCH ('E')	370 LF	236 XR1	5714	6501	0	0	12,215
	2'WDx3'DPx370' (6' WALLS)		(.632)	(15.44)	(17.57)	(0.00)	(0.00)	(33.01)
1042006	INCLUDES REINFORCING,							
	FORMS - 65 CY							
01 02 2006 0250	CONCRETE TRENCH ('F')	760 LF	280 XR1	6838	7228	0	0	14,066
	2'WDx1.5'DPx760' (6'		(.368)	(9.00)	(9.51)	(0.00)	(0.00)	(18.51)
1042006	WALLS) INCLUDES REINF.,							
	FORMS, 85 CY							
01 02 2006 0255	CONCRETE TRENCH 'G'	73 LF	34 XR1	830	900	0	0	1,730
	2'WDx2'DPx73' (6' WALLS)		(.466)	(11.37)	(12.33)	(0.00)	(0.00)	(23.70)
1042006	INCLUDES REINFORCING,							
	FORMS - 10 CY							

THE A.M. KINNEY AFFILIATION
ESTIMATE DETAILS

DATE: 02NOV89 CLIENT: DOE/WMCO PROJECT NAME: WST PIT RNF CTRL-100% EST PAGE NO.: 13
CLIENT NO.: 02902-33 PROJECT LOCATION: FERNALD, OHIO BY: JJB

CODES/SEQ TAG	DESCRIPTION	QUANT / UNIT SIZE	LABOR HOURS	$LABOR	$FIELD	$OWNER	$SUBCON	$TOTAL
KEY1: GENERAL CONTRACT-PRIME		KEY3: 2006-STORM SEWERS/DITCHES						
KEY2: 2000-IMPROVEMENTS TO LAND		OPT3: 104-PIPING						
01 02 2006 0260	PLUG EXISTING 48" STORM SEWER PIPE	1 EA	16 LA1	346	100	0	0	446
			(16.00)	(346.00)	(100.00)	(0.00)	(0.00)	(446.00)
1042006								
01 02 2006 0265	JACKING 30" DIA. RCP	30 LF	198 XL1	4570	13200	0	0	17,770
			(6.60)	(152.33)	(440.00)	(0.00)	(0.00)	(592.33)
1042006								
01 02 2006 0270	PLUG EXISTING 10" STORM SEWER PIPE	1 EA	4 LA1	87	20	0	0	107
			(4.00)	(87.00)	(20.00)	(0.00)	(0.00)	(107.00)
1042006								
01 02 2006 0275	CLEAN EXISTING 14" STEEL PIPE CULVERT	30 LF	30 LA1	649	0	0	0	649
			(1.00)	(21.63)	(0.00)	(0.00)	(0.00)	(21.63)
1042006								
		104-PIPING:	1799	42684	71613	0	0	114,297

THE A.M. KINNEY AFFILIATION
ESTIMATE DETAILS

DATE: 02NOV89 CLIENT: DOE/WMCO PROJECT NAME: WST PIT RNF CTRL-100% EST PAGE NO.: 14
CLIENT NO.: 02902-33 PROJECT LOCATION: FERNALD, OHIO BY: JJB

KEY1: GENERAL CONTRACT-PRIME KEY3: 2006-STORM SEWERS/DITCHES
KEY2: 2000-IMPROVEMENTS TO LAND OPT3: 105-SUMP

CODES/SEQ TAG	DESCRIPTION	QUANT / UNIT SIZE	LABOR HOURS	$LABOR	$FIELD	$OWNER	$SUBCON	$TOTAL
01 02 2006 0280	CONCRETE FORMS FOR SLAB	1764 SF	205 XC1	4875	970	0	0	5,845
	ON GRADE FOR SUMP		(.116)	(2.76)	(.55)	(0.00)	(0.00)	(3.31)
1052006								
01 02 2006 0285	REINFORCING FOR SLAB ON	47283 LBS	331 IR1	8745	13239	0	0	21,984
	GRADE FOR SUMP		(.007)	(.18)	(.28)	(0.00)	(0.00)	(.46)
1052006								
01 02 2006 0290	CONCRETE FOR SLAB ON	1070 CY	311 XE1	6780	53875	0	0	60,655
	GRADE FOR SUMP		(.291)	(6.34)	(50.35)	(0.00)	(0.00)	(56.69)
1052006								
01 02 2006 0295	FINISHING FOR SLAB ON	8004 SF	72 CF1	1627	0	0	0	1,627
	GRADE FOR SUMP		(.009)	(.20)	(0.00)	(0.00)	(0.00)	(.20)
1052006								
01 02 2006 0300	WATERPROOF MEMBRANE FOR	7706 SF	316 RF1	7688	4778	0	0	12,466
	SLAB ON GRADE FOR SUMP		(.041)	(1.00)	(.62)	(0.00)	(0.00)	(1.62)
1052006	1/4" CLAYMAX OR EQUAL							
01 02 2006 0305	CONCRETE FORMS FOR WALLS	7506 SF	915 XD1	21978	5328	0	0	27,306
	FOR SUMP		(.122)	(2.93)	(.71)	(0.00)	(0.00)	(3.64)
1052006								
01 02 2006 0310	REINFORCING FOR WALLS	22684 LBS	113 IR1	2985	6352	0	0	9,337
	FOR SUMP		(.005)	(.13)	(.28)	(0.00)	(0.00)	(.41)
1052006								
01 02 2006 0315	CONCRETE FOR WALLS	171 CY	78 XE1	1700	8646	0	0	10,346
	FOR SUMP		(.456)	(9.94)	(50.56)	(0.00)	(0.00)	(60.50)
1052006								
01 02 2006 0320	WATERPROOF MEMBRANE FOR	6865 SF	316 RF1	7688	4256	0	0	11,944
	WALLS FOR SUMP		(.046)	(1.12)	(.62)	(0.00)	(0.00)	(1.74)
1052006	1/4" CLAYMAX OR EQUAL							

THE A.M. KINNEY AFFILIATION
ESTIMATE DETAILS

DATE: 02NOV89 CLIENT: DOE/WMCO PROJECT NAME: WST PIT RNF CTRL-100% EST PAGE NO.: 15
CLIENT NO.: 02902-33 PROJECT LOCATION: FERNALD, OHIO BY: JJB

KEY1: GENERAL CONTRACT-PRIME KEY3: 2006-STORM SEWERS/DITCHES
KEY2: 2000-IMPROVEMENTS TO LAND OPT3: 105-SUMP

CODES/SEQ TAG	DESCRIPTION	QUANT / UNIT SIZE	LABOR HOURS	$LABOR	$FIELD	$OWNER	$SUBCON	$TOTAL
01 02 2006 0325	WATERSTOPS FOR SUMP	1083 LF	57 CA1	1396	1625	0	0	3,021
	6" PVC		(.053)	(1.29)	(1.50)	(0.00)	(0.00)	(2.79)
1052006								
01 02 2006 0330	CONCRETE FORMS FOR	162 SF	17 XD1	408	249	0	0	657
	SUPPORTED SLABS FOR SUMP		(.105)	(2.52)	(1.54)	(0.00)	(0.00)	(4.06)
1052006								
01 02 2006 0335	REINFORCING FOR	462 LBS	3 IR1	79	129	0	0	208
	SUPPORTED SLABS FOR SUMP		(.006)	(.17)	(.28)	(0.00)	(0.00)	(.45)
1052006								
01 02 2006 0340	CONCRETE FOR	3 CY	1 XE1	22	167	0	0	189
	SUPPORTED SLABS FOR SUMP		(.333)	(7.33)	(55.67)	(0.00)	(0.00)	(63.00)
1052006								
01 02 2006 0345	1-1/2" FIBERGLASS GRATING	135 SF	9 IW1	228	1778	0	0	2,006
	FOR SUMP. CHEMGRATE OR		(.067)	(1.69)	(13.17)	(0.00)	(0.00)	(14.86)
1052006	EQUAL. 1-1/2"x6" PATTERN							
01 02 2006 0350	LADDER RUNGS FOR SUMP	30 EA	11 IW1	278	607	0	0	885
	CAST IRON.NEENAH R-1982-I		(.367)	(9.27)	(20.23)	(0.00)	(0.00)	(29.50)
1052006	OR EQUAL							
01 02 2006 0355	MANHOLE COVERS FOR SUMP	4 EA	12 IW1	303	400	0	0	703
	NEENAH R-6660-KH OR EQUAL		(3.00)	(75.75)	(100.00)	(0.00)	(0.00)	(175.75)
1052006								
01 02 2006 0360	MISC. STEEL FOR SUMP	2780 LBS	28 IW1	708	2780	0	0	3,488
	HOT DIP GALVANIZED		(.01)	(.25)	(1.00)	(0.00)	(0.00)	(1.25)
1052006								
01 02 2006 0365	EMBEDDED METAL FOR SUMP	640 LBS	6 IW1	152	3200	0	0	3,352
	STAINLESS STEEL		(.009)	(.24)	(5.00)	(0.00)	(0.00)	(5.24)
1052006								

THE A.M. KINNEY AFFILIATION
ESTIMATE DETAILS

DATE: 02NOV89 CLIENT: DOE/WMCO PROJECT NAME: WST PIT RNF CTRL-100% EST PAGE NO.: 16
CLIENT NO.: 02902-33 PROJECT LOCATION: FERNALD, OHIO BY: JJB

KEY1: GENERAL CONTRACT-PRIME KEY3: 2006-STORM SEWERS/DITCHES
KEY2: 2000-IMPROVEMENTS TO LAND OPT3: 105-SUMP

CODES/SEQ TAG	DESCRIPTION	QUANT / UNIT SIZE	LABOR HOURS	$LABOR	$FIELD	$OWNER	$SUBCON	$TOTAL
01 02 2006 0370	TRASH RACK GRATING	308 SF	12 IW1	303	684	0	0	987
	1-1/2"x1/4" BAR GRATING		(.039)	(.98)	(2.22)	(0.00)	(0.00)	(3.20)
1052006	HOT DIP GALVANIZED FOR SUMP							
01 02 2006 0375	HANDRAIL FOR SUMP	310 LF	62 IW1	1568	3097	0	0	4,665
	1-1/2" DIA. POSTS AT 6'		(.20)	(5.06)	(9.99)	(0.00)	(0.00)	(15.05)
1052006	O.C.. GALV. W/2 RAILS							
01 02 2006 0380	HANDRAIL FOR SUMP	18 LF	5 IW1	126	189	0	0	315
	REMOVABLE 1-1/2"DIA.POSTS		(.278)	(7.00)	(10.50)	(0.00)	(0.00)	(17.50)
1052006	W/2 RAILS							
01 02 2006 0385	KICK PLATE FOR RAILING	29 LF	0	0	57	0	0	57
	FOR SUMP. 3/16"x4" GALV.		(0.00)	(0.00)	(1.97)	(0.00)	(0.00)	(1.97)
1052006	(LABOR INCLUDED IN HANDRAIL UNIT MANHOURS)							
01 02 2006 0390	CONCRETE FORMS FOR SLAB	113 SF	13 XC1	309	62	0	0	371
	ON GRADE FOR MISC.		(.115)	(2.73)	(.55)	(0.00)	(0.00)	(3.28)
1052006	STRUCTURES							
01 02 2006 0395	REINFORCING FOR SLAB	274 LBS	2 IR1	53	77	0	0	130
	ON GRADE FOR MISC.		(.007)	(.19)	(.28)	(0.00)	(0.00)	(.47)
1052006	STRUCTURES							
01 02 2006 0400	CONCRETE FOR SLAB	6.5 CY	2 XE1	44	327	0	0	371
	ON GRADE FOR MISC.		(.308)	(6.77)	(50.31)	(0.00)	(0.00)	(57.08)
1052006	STRUCTURES							
01 02 2006 0405	CONCRETE FORMS FOR WALLS	723 SF	88 XD1	2114	513	0	0	2,627
	FOR MISC. STRUCTURES		(.122)	(2.92)	(.71)	(0.00)	(0.00)	(3.63)
1052006								

THE A.M. KINNEY AFFILIATION
ESTIMATE DETAILS

DATE: 02NOV89 CLIENT: DOE/WMCO PROJECT NAME: WST PIT RNF CTRL-100% EST PAGE NO.: 17
CLIENT NO.: 02902-33 PROJECT LOCATION: FERNALD, OHIO BY: JJB

KEY1: GENERAL CONTRACT-PRIME KEY3: 2006-STORM SEWERS/DITCHES
KEY2: 2000-IMPROVEMENTS TO LAND OPT3: 105-SUMP

CODES/SEQ TAG	DESCRIPTION	QUANT / UNIT SIZE	LABOR HOURS	$LABOR	$FIELD	$OWNER	$SUBCON	$TOTAL
01 02 2006 0410 1052006	REINFORCING FOR WALLS FOR MISC. STRUCTURES	1405 LBS	7 IR1 (.005)	185 (.13)	393 (.28)	0 (0.00)	0 (0.00)	578 (.41)
01 02 2006 0415 1052006	CONCRETE FOR WALLS FOR MISC. STRUCTURES	15 CY	7 XE1 (.467)	153 (10.20)	759 (50.60)	0 (0.00)	0 (0.00)	912 (60.80)
01 02 2006 0420 1052006	DRILLING AND GROUTING OF REBARS IN EXISTING CONCRETE FOR MISC. STRUCTURES	18 EA	7 XF1 (.389)	168 (9.33)	54 (3.00)	0 (0.00)	0 (0.00)	222 (12.33)
01 02 2006 0425 1052006	LADDER RUNGS FOR MISC. STRUCTURES, CAST IRON NEENAH R-1982-J OR EQUAL	12 EA	2 IW1 (.167)	51 (4.25)	120 (10.00)	0 (0.00)	0 (0.00)	171 (14.25)
01 02 2006 0430 1052006	SLUICE GATE FOR MISC. STRUCTURES, HY-Q 12" ID WALL THIMBLE W/HANDWHEEL OPER., MODEL 139-62	2 EA	128 IW1 (64.00)	3237 (1618.50)	10000 (5000.00)	0 (0.00)	0 (0.00)	13,237 (6618.50)
01 02 2006 0435 1052006	TRASH RACK ASSEMBLIES ANGLES & 1-1/2" GRATING HOT DIP GALV. FOR MISC. STRUCTURES	646 LBS	45 IW1 (.07)	1138 (1.76)	581 (.90)	0 (0.00)	0 (0.00)	1,719 (2.66)
01 02 2006 0440 1052006	EMBEDDED METAL, GALV., FOR MISC. STRUCTURES	205 LBS	2 IW1 (.01)	51 (.25)	205 (1.00)	0 (0.00)	0 (0.00)	256 (1.25)
01 02 2006 0445 1052006	12" CAST IRON WALL PIPE WITH BLIND FLANGE FOR MISC. STRUCTURES CLOW F-1426	2 EA	4 IW1 (2.00)	101 (50.50)	40 (20.00)	0 (0.00)	0 (0.00)	141 (70.50)

THE A.M. KINNEY AFFILIATION
ESTIMATE DETAILS

DATE: 02NOV89 CLIENT: DOE/WMCO PROJECT NAME: WST PIT RNF CTRL-100% EST PAGE NO.: 18
CLIENT NO.: 02902-33 PROJECT LOCATION: FERNALD, OHIO BY: JJB

CODES/SEQ TAG	DESCRIPTION	QUANT / UNIT SIZE	LABOR HOURS	$LABOR	$FIELD	$OWNER	$SUBCON	$TOTAL
KEY1: GENERAL CONTRACT-PRIME		KEY3: 2006-STORM SEWERS/DITCHES						
KEY2: 2000-IMPROVEMENTS TO LAND		OPT3: 105-SUMP						
01 02 2006 0450	FIBERGLASS GRATING FOR MISC. STRUCTURES	44 SF	3 IW1	76	528	0	0	604
1052006	1-1/4"x6" CHEMGRATE OR EQUAL		(.068)	(1.73)	(12.00)	(0.00)	(0.00)	(13.73)
01 02 2006 0455	CMP STANDPIPE FOR MISC. STRUCTURES. GALVANIZED	1 EA	8 XG1	183	100	0	0	283
1052006			(8.00)	(183.00)	(100.00)	(0.00)	(0.00)	(283.00)
		105-SUMP:	3198	77500	126165	0	0	203,665

THE A.M. KINNEY AFFILIATION
ESTIMATE DETAILS

DATE: 02NOV89 CLIENT: DOE/WMCO PROJECT NAME: WST PIT RNF CTRL-100% EST PAGE NO.: 19
CLIENT NO.: 02902-33 PROJECT LOCATION: FERNALD, OHIO BY: JJB

CODES/SEQ TAG	DESCRIPTION	QUANT / UNIT SIZE	LABOR HOURS	$LABOR	$FIELD	$OWNER	$SUBCON	$TOTAL
KEY1: GENERAL CONTRACT-PRIME		KEY3: 2006-STORM SEWERS/DITCHES						
KEY2: 2000-IMPROVEMENTS TO LAND		OPT3: 106-TRENCH DRAIN						
01 02 2006 0460	GRATING (1' WIDE)	313 LF	36 IW1	910	13772	0	0	14,682
	TRENCH A (77 LF)		(.115)	(2.91)	(44.00)	(0.00)	(0.00)	(46.91)
1062006	TRENCH B (116 LF)							
	TRENCH C & CONT.(120 LF)							
01 02 2006 0465	GRATING (2' WIDE)	379 LF	44 IW1	1113	26151	0	0	27,264
	TRENCH D (106 LF)		(.116)	(2.94)	(69.00)	(0.00)	(0.00)	(71.94)
1062006	TRENCH F (200 LF)							
	TRENCH G (73 LF)							
01 02 2006 0470	GRATING (3' WIDE)	46 LF	5 IW1	126	5106	0	0	5,232
	TRENCH D (8 LF)		(.109)	(2.76)	(111.00)	(0.00)	(0.00)	(113.76)
1062006	TRENCH D (38 LF)							
	106-TRENCH DRAIN:		85	2169	45029	0	0	47,178
	2006-STORM SEWERS/DITCHES:		6757	160328	286724	0	0	447,052
	2000-IMPROVEMENTS TO LAND:		7087	168030	292877	0	0	460,907

THE A. M. KINNEY AFFILIATION
ESTIMATE DETAILS

DATE: 02NOV89 CLIENT: DOE/WMCO PROJECT NAME: WST PIT RNF CTRL-100% EST PAGE NO.: 20
CLIENT NO.: 02902-33 PROJECT LOCATION: FERNALD, OHIO BY: JJB

CODES/SEQ TAG	DESCRIPTION	QUANT / UNIT SIZE	LABOR HOURS	$LABOR	$FIELD	$OWNER	$SUBCON	$TOTAL
KEY1: GENERAL CONTRACT-PRIME		KEY3: 9900-MARKUPS						
KEY2: 9000-MARKUPS		OPT3: 000-MARKUPS						
01 09 9900 0005	LABOR MARKUP	168030 FCT	0	167022	0	0	0	167,022
	SEE APPENDIX 'C'	QTY01L (	0.00)	(.99)	(0.00)	(0.00)	(0.00)	(.99)
0009900								
01 09 9900 0010	MATERIAL MARKUP	292877 FCT	0	0	71462	0	0	71,462
	SEE APPENDIX 'C'	QTY01F (	0.00)	(0.00)	(.24)	(0.00)	(0.00)	(.24)
0009900								
		000-MARKUPS:	0	167022	71462	0	0	238,484
		9900-MARKUPS:	0	167022	71462	0	0	238,484
		9000-MARKUPS:	0	167022	71462	0	0	238,484
		GENERAL CONTRACT-PRIME:	7087	335052	364339	0	0	699,391

THE A.M. KINNEY AFFILIATION
ESTIMATE DETAILS

DATE: 02NOV89 CLIENT: DOE/WMCO PROJECT NAME: WST PIT RNF CTRL-100% EST PAGE NO.: 21
CLIENT NO.: 02902-33 PROJECT LOCATION: FERNALD, OHIO BY: JJB

CODES/SEQ TAG	DESCRIPTION	QUANT / UNIT SIZE	LABOR HOURS	$LABOR	$FIELD	$OWNER	$SUBCON	$TOTAL
KEY1: FENCING SUBCONTRACT		KEY3: 2005-FENCES/GUARD TOWERS						
KEY2: 2000-IMPROVEMENTS TO LAND		OPT3: 101-SECURITY FENCE						
03 02 2005 0005	INSTALL NEW FENCE	280 LF	36 XH1	805	2643	0	0	3,448
			(.129)	(2.88)	(9.44)	(0.00)	(0.00)	(12.31)
1012005								
	101-SECURITY FENCE:		36	805	2643	0	0	3,448

THE A.M. KINNEY AFFILIATION
ESTIMATE DETAILS

DATE: 30NOV89 CLIENT: DOE/WMCO CLIENT NO.: 02902-33 PROJECT NAME: UST PIT RNF CTRL-100% EST PROJECT LOCATION: FERNALD, OHIO PAGE NO.: 22 BY: JJB

CODES/SEQ TAG	DESCRIPTION	QUANT / UNIT SIZE	LABOR HOURS	$LABOR	$FIELD	$OWNER	$SUBCON	$TOTAL
KEY1: FENCING SUBCONTRACT		KEY3: 2005-FENCES/GUARD TOWERS						
KEY2: 2000-IMPROVEMENTS TO LAND		OPT3: 121-RELOCATE FENCING						
03 02 2005 0010	RELOCATE EXISTING FENCE	180 LF	36 XH1	805	180	0	0	985
	2 NEW CORR. METAL POSTS		(.20)	(4.47)	(1.00)	(0.00)	(0.00)	(5.47)
1212005	NEW LINE POST							
	121-RELOCATE FENCING:		36	805	180	0	0	985
	2005-FENCES/GUARD TOWERS:		72	1610	2823	0	0	4,433
	2000-IMPROVEMENTS TO LAND:		72	1610	2823	0	0	4,433

THE A.M. KINNEY AFFILIATION
ESTIMATE DETAILS

DATE: 02NOV89 CLIENT: DOE/WMCO PROJECT NAME: WST PIT RNF CTRL-100% EST PAGE NO.: 23
CLIENT NO.: 02902-33 PROJECT LOCATION: FERNALD, OHIO BY: JJB

CODES/SEQ TAG	DESCRIPTION	QUANT / UNIT SIZE	LABOR HOURS	$LABOR	$FIELD	$OWNER	$SUBCON	$TOTAL
KEY1: FENCING SUBCONTRACT		KEY3: 9900-MARKUPS						
KEY2: 9000-MARKUPS		OPT3: 000-MARKUPS						
03 09 9900 0005	LABOR MARKUP	1610 FCT	0	1626	0	0	0	1,626
	SEE APPENDIX 'C'	QTY03L	(0.00)	(1.01)	(0.00)	(0.00)	(0.00)	(1.01)
0009900								
03 09 9900 0010	MATERIAL MARKUP	2823 FCT	0	0	1307	0	0	1,307
	SEE APPENDIX 'C'	QTY03F	(0.00)	(0.00)	(.46)	(0.00)	(0.00)	(.46)
0009900								
	000-MARKUPS:		0	1626	1307	0	0	2,933
	9900-MARKUPS:		0	1626	1307	0	0	2,933
	9000-MARKUPS:		0	1626	1307	0	0	2,933
	FENCING SUBCONTRACT:		72	3236	4130	0	0	7,366

THE A. M. KINNEY AFFILIATION
ESTIMATE DETAILS

DATE: 22NOV89 CLIENT: DOE/FMCO PROJECT NAME: WST PIT RMF CTRL-100% EST PAGE NO.: 24
CLIENT NO.: 02902-33 PROJECT LOCATION: FERNALD, OHIO BY: JJB

CODES/SEQ TAG	DESCRIPTION	QUANT / UNIT SIZE	LABOR HOURS	$LABOR	$FIELD	$OWNER	$SUBCON	$TOTAL
KEY1: MECHANICAL SUBCONTRACT		KEY3: 2006-STORM SEWERS/DITCHES						
KEY2: 2000-IMPROVEMENTS TO LAND		OPT3: 101-INSTALLED EQUIPMENT						
05 02 2006 0005	SUMP PUMPS. CAST IRON	4 EA	64 PM1	1624	44100	0	0	45.724
	QUICK REMOVAL.SUBMERSIBLE	(	16.00)	(406.00)	(11025.00)	(0.00)	(0.00)	(11431.00)
1012006	700 GPM @ 30'TDH							
05 02 2006 0010	CONTROLS: THE ITEMS UNDER							
	SEQUENCE NUMBER 0015 ARE							
1012006	ALL INCLUDED IN THE PUMP							
	PRICE.							
05 02 2006 0015	SUMP PUMP CONTROLS: TO							
	INCLUDE: CIRCUIT BREAKERS							
1012006	WITH OVERLOAD PROTECTION.							
	ACROSS THE LINE MAGNETIC*							
05 02 2006 0016	*STARTERS.FOUR STAGE PUMP							
	SEQUENCER. 24V CONTROL							
1012006	CIRCUIT W/TRANSFORMER.HOA							
	SWITCH & RUNNING LIGHT*							
05 02 2006 0017	*FOR EACH PUMP AND							
	CONDENSATION PROTECTION.							
1012006	ALL MOUNTED IN							
	WEATHERPROOF ENCLOSURE *							
05 02 2006 0018	* PLUS LEVEL SENSORS WITH							
	25' OF CABLE (5)							
1012006								
05 02 2006 0020	INLET TROUGH: 40'x8'	1 EA	30 PM1	761	800	0	0	1.561
	TROUGH MADE FROM 80 LF OF	(	30.00)	(761.00)	(800.00)	(0.00)	(0.00)	(1561.00)
1012006	12"PVC PIPE & 10 PLY FLEX							
	MEMBRANE LINER MATERIAL							

THE A.M. KINNEY AFFILIATION
ESTIMATE DETAILS

DATE: 02NOV89 CLIENT: DOE/WMCO PROJECT NAME: WST PIT RNF CTRL-100% EST PAGE NO.: 25
CLIENT NO.: 02902-33 PROJECT LOCATION: FERNALD, OHIO BY: JJB

CODES/SEQ TAG	DESCRIPTION	QUANT / UNIT SIZE	LABOR HOURS	$LABOR	$FIELD	$OWNER	$SUBCON	$TOTAL
KEY1: MECHANICAL SUBCONTRACT		KEY3: 2006-STORM SEWERS/DITCHES						
KEY2: 2000-IMPROVEMENTS TO LAND		OPT3: 101-INSTALLED EQUIPMENT						
	101-INSTALLED EQUIPMENT:		94	2385	44900	0	0	47,285

THE A.M. KINNEY AFFILIATION
ESTIMATE DETAILS

DATE: 02NOV89 CLIENT: DOE/WMCO PROJECT NAME: WST PIT RNF CTRL-100% EST PAGE NO.: 26
CLIENT NO.: 02902-33 PROJECT LOCATION: FERNALD, OHIO BY: JJB

CODES/SEQ TAG	DESCRIPTION	QUANT / UNIT SIZE	LABOR HOURS	$LABOR	$FIELD	$OWNER	$SUBCON	$TOTAL
KEY1: MECHANICAL SUBCONTRACT		KEY3: 2006-STORM SEWERS/DITCHES						
KEY2: 2000-IMPROVEMENTS TO LAND		OPT3: 102-EXCAVATION & BACKFILL						
05 02 2006 0025	EXCAVATION AND BACKFILL	750 LF	59 XA1	1327	750	0	0	2.077
	4'DEEPx1'WIDE TRENCH FOR		(.079)	(1.77)	(1.00)	(0.00)	(0.00)	(2.77)
1022006	745 LF FORCE MAIN - SIDE							
	SLOPE VARIES 0:1 TO 2:1 *							
05 02 2006 0026	* (ASSUME THE APPROXIMATE							
	4 CY OF CONTAMINATED SOIL							
1022006	WILL BE SENT TO NEVADA)							
	102-EXCAVATION & BACKFILL:		59	1327	750	0	0	2.077

THE A.M. KINNEY AFFILIATION
ESTIMATE DETAILS

DATE: 02NOV89 CLIENT: DOE/WMCO PROJECT NAME: WST PIT RNF CTRL-100% EST PAGE NO.: 27
CLIENT NO.: 02902-33 PROJECT LOCATION: FERNALD, OHIO BY: JJE

KEY1: MECHANICAL SUBCONTRACT KEY3: 2006-STORM SEWERS/DITCHES
KEY2: 2000-IMPROVEMENTS TO LAND OPT3: 104-PIPING

CODES/SEQ TAG	DESCRIPTION	QUANT / UNIT SIZE	LABOR HOURS	$LABOR	$FIELD	$OWNER	$SUBCON	$TOTAL
05 02 2006 0030	PIPING: SCH 40 CS ASTM A-53B BE ERW IN							
1042006	TRENCH							
05 02 2006 0035	12" PIPE	745 LF	787 PM1	19966	36222	0	0	56.188
			(1.056)	(26.80)	(48.62)	(0.00)	(0.00)	(75.42)
1042006								
05 02 2006 0040	PIPING: SCH 40 CS ASTM A-53B BE ERW ON							
1042006	CONCRETE SUPPORTS							
05 02 2006 0045	12" PIPE	75 LF	79 PM1	2004	3519	0	0	5,523
			(1.053)	(26.72)	(46.92)	(0.00)	(0.00)	(73.64)
1042006								
05 02 2006 0050	8" PIPE	65 LF	47 PM1	1192	1759	0	0	2.951
			(.723)	(18.34)	(27.06)	(0.00)	(0.00)	(45.40)
1042006								
05 02 2006 0055	PIPE FITTINGS:STD WEIGHT CS BUTT WELDED							
1042006								
05 02 2006 0060	12" 90 DEGREE ELBOW	5 EA	48 PM1	1218	928	0	0	2.146
			(9.60)	(243.60)	(185.60)	(0.00)	(0.00)	(429.20)
1042006								
05 02 2006 0065	8" 90 DEGREE ELBOW	6 EA	36 PM1	913	435	0	0	1.348
			(6.00)	(152.17)	(72.50)	(0.00)	(0.00)	(224.67)
1042006								
05 02 2006 0070	12"x12" TEE	4 EA	60 PM1	1522	1506	0	0	3.028
			(15.00)	(380.50)	(376.50)	(0.00)	(0.00)	(757.00)
1042006								

THE A.M. KINNEY AFFILIATION
ESTIMATE DETAILS

DATE: 22NOV89 CLIENT: DOE/WMCO CLIENT NO.: 02902-33 PROJECT NAME: WST PIT RNF CTRL-100% EST PROJECT LOCATION: FERNALD, OHIO PAGE NO.: 28 BY: JJR

KEY1: MECHANICAL SUBCONTRACT
KEY2: 2000-IMPROVEMENTS TO LAND
KEY3: 2006-STORM SEWERS/DITCHES
OPT3: 104-PIPING

CODES/SEQ TAG	DESCRIPTION	QUANT / UNIT SIZE	LABOR HOURS	$LABOR	$FIELD	$OWNER	$SUBCON	$TOTAL
05 02 2006 0075	3"X8" TEE	1 EA	10 PM1	254	102	0	0	356
			(10.00)	(254.00)	(102.00)	(0.00)	(0.00)	(356.00)
1042006								
05 02 2006 0080	12"x8" REDUCER	4 EA	56 PM1	1421	1400	0	0	2,321
			(14.00)	(355.25)	(350.00)	(0.00)	(0.00)	(705.25)
1042006								
05 02 2006 0085	3"X6" REDUCER	4 EA	38 PM1	964	522	0	0	1,486
			(9.50)	(241.00)	(130.50)	(0.00)	(0.00)	(371.50)
1042006								
05 02 2006 0090	3" 150# WELDNECK FLANGES	18 EA	62 PM1	1573	877	0	0	2,450
			(3.444)	(87.39)	(48.72)	(0.00)	(0.00)	(136.11)
1042006								
05 02 2006 0095	6" 150# WELDNECK FLANGES	4 EA	10 PM1	254	122	0	0	376
			(2.50)	(63.50)	(30.50)	(0.00)	(0.00)	(94.00)
1042006								
05 02 2006 0100	BOLT,NUT, AND GASKET SETS							
1042006								
05 02 2006 0105	3"	18 EA	7 PM1	178	231	0	0	409
			(.389)	(9.89)	(12.83)	(0.00)	(0.00)	(22.72)
1042006								
05 02 2006 0110	6"	4 EA	1 PM1	25	47	0	0	72
			(.25)	(6.25)	(11.75)	(0.00)	(0.00)	(18.00)
1042006								
05 02 2006 0115	2" THREADOLET WELDED TO 12" PIPE	1 EA	1 PM1	25	10	0	0	35
			(1.00)	(25.00)	(10.00)	(0.00)	(0.00)	(35.00)
1042006								

THE A.M. KINNEY AFFILIATION
ESTIMATE DETAILS

DATE: 02NOV89 CLIENT: DOE/WMCO PROJECT NAME: WST PIT PNF CTPL-100% EST PAGE NO.: 29
CLIENT NO.: 02902-33 PROJECT LOCATION: FERNALD, OHIO BY: JJB

CODES/SEQ TAG	DESCRIPTION	QUANT / UNIT SIZE	LABOR HOURS	$LABOR	$FIELD	$OWNER	$SUBCON	$TOTAL
KEY1: MECHANICAL SUBCONTRACT		KEY3: 2006-STORM SEWERS/DITCHES						
KEY2: 1000-IMPROVEMENTS TO LAND		OPT3: 104-PIPING						
05 02 2006 0120	SCH 40 STEEL PIPE ASTM A120 T&C							
1042006								
05 02 2006 0125	2" PIPE	20 LF	5 PM1	127	47	0	0	174
			(.25)	(6.35)	(2.35)	(0.00)	(0.00)	(8.70)
1042006								
05 02 2006 0130	FITTINGS: 150# MALLEABLE IRON							
1042006								
05 02 2006 0135	2" 90 DEGREE ELBOWS	2 EA	2 PM1	51	6	0	0	57
			(1.00)	(25.50)	(3.00)	(0.00)	(0.00)	(28.50)
1042006								
05 02 2006 0140	8" BUTTERFLY VALVES 150# CI BODY SS DISC AND BUNA N SEAT LUG TYPE, LEVER ACTUATOR	4 EA	21 PM1	533	800	0	0	1,333
			(5.25)	(133.25)	(200.00)	(0.00)	(0.00)	(333.25)
1042006								
05 02 2006 0145	3" WAFER CHECK VALVES 150# CS BODY 316SS TRIM FULL FLANGE	4 EA	21 PM1	533	2660	0	0	3,193
			(5.25)	(133.25)	(665.00)	(0.00)	(0.00)	(798.25)
1042006								
05 02 2006 0150	UNDERGROUND PROTECTIVE COATINGS: TRUEX PLASTIC PIPE COATING.SHOP APPLIED TO PIPE.FIELD APPLIED TO*							
1042006								
05 02 2006 0151	*JOINTS AND FITTINGS							
1042006								
05 02 2006 0155	12" PIPE (INCLUDED IN PIPE COST)	745 LF	0	0	0	0	0	0
			(0.00)	(0.00)	(0.00)	(0.00)	(0.00)	(0.00)
1042006								

THE A.M. KINNEY AFFILIATION
ESTIMATE DETAILS

DATE: 02NOV89 CLIENT: DOE/WMCO PROJECT NAME: WST PIT RNF CTRL-100% EST PAGE NO.: 30
CLIENT NO.: 02902-33 PROJECT LOCATION: FERNALD, OHIO BY: JJB

CODES/SEQ TAG	DESCRIPTION	QUANT / UNIT SIZE	LABOR HOURS	$LABOR	$FIELD	$OWNER	$SUBCON	$TOTAL
KEY1: MECHANICAL SUBCONTRACT		KEY3: 2006-STORM SEWERS/DITCHES						
KEY2: 2000-IMPROVEMENTS TO LAND		OPT3: 104-PIPING						
05 02 2006 0160	90 DEGREE ELBOWS	3 EA	24 PM1	609	30	0	0	639
			(8.00)	(203.00)	(10.00)	(0.00)	(0.00)	(213.00)
1042006								
05 02 2006 0165	LEVEL ELEMENT STILLING CHAMBER:							
1042006								
05 02 2006 0170	SCH 40 316SS PIPE 4" DIA	17 LF	3 PM1	203	789	0	0	992
			(.471)	(11.94)	(46.41)	(0.00)	(0.00)	(58.35)
1042006								
05 02 2006 0175	4" DIA 150# 316SS SLIP-ON FLANGE	1 EA	3 PM1	76	114	0	0	190
			(3.00)	(76.00)	(114.00)	(0.00)	(0.00)	(190.00)
1042006								
05 02 2006 0180	4" BOLT AND GASKET SET	1 EA	0 PM1	0	8	0	0	8
			(0.00)	(0.00)	(8.00)	(0.00)	(0.00)	(8.00)
1042006								
05 02 2006 0185	ANCHOR BOLTS - 3/8" DIA EXPANSION ANCHORS	4 EA	14 PM1	355	6	0	0	361
			(3.50)	(88.75)	(1.50)	(0.00)	(0.00)	(90.25)
1042006								
05 02 2006 0190	MISC 316SS PLATES AND PIECES - 1/4" THICK	.7 SF	1 PM1	25	14	0	0	39
			(1.429)	(35.71)	(20.00)	(0.00)	(0.00)	(55.71)
1042006								
05 02 2006 0195	FABRICATION - ESTIMATED	1 EA	30 PM1	761	0	0	0	761
			(30.00)	(761.00)	(0.00)	(0.00)	(0.00)	(761.00)
1042006								

THE A.M. KINNEY AFFILIATION
ESTIMATE DETAILS

DATE: 02NOV89 CLIENT: DOE/WMCO PROJECT NAME: WST PIT RNF CTRL-100% EST PAGE NO.: 31
CLIENT NO.: 02902-33 PROJECT LOCATION: FERNALD, OHIO BY: JJB

CODES/SEQ TAG	DESCRIPTION	QUANT / UNIT SIZE	LABOR HOURS	$LABOR	$FIELD	$OWNER	$SUBCON	$TOTAL
KEY1: MECHANICAL SUBCONTRACT		KEY3: 2006-STORM SEWERS/DITCHES						
KEY2: 2000-IMPROVEMENTS TO LAND		OPT3: 104-PIPING						
	104-PIPING:		1371	34782	52154	0	0	86,936

THE A.M. KINNEY AFFILIATION
ESTIMATE DETAILS

DATE: 02NOV89 CLIENT: DOE/WMCO PROJECT NAME: WST PIT RNF CTRL-100% EST PAGE NO.: 32
CLIENT NO.: 02902-33 PROJECT LOCATION: FERNALD, OHIO BY: JJB

CODES/SEQ TAG	DESCRIPTION	QUANT / UNIT SIZE	LABOR HOURS	$LABOR	$FIELD	$OWNER	$SUBCON	$TOTAL
KEY1: MECHANICAL SUBCONTRACT		KEY3: 2006-STORM SEWERS/DITCHES						
KEY2: 2000-IMPROVEMENTS TO LAND		OPT3: 108-PAINTING						
05 02 2006 0200 1082006	PAINTING:							
05 02 2006 0205 1082006	12" PIPE	75 LF	12 PA1 .16)	267 (3.56)	25 (.33)	0 (0.00)	0 (0.00)	292 (3.39)
05 02 2006 0210 1082006	3" PIPE	70 LF	8 PA1 .114)	178 (2.54)	19 (.27)	0 (0.00)	0 (0.00)	197 (2.51)
	108-PAINTING:		20	445	44	0	0	489
	2006-STORM SEWERS/DITCHES:		1544	38939	97848	0	0	136.787
	2000-IMPROVEMENTS TO LAND:		1544	38939	97848	0	0	136.787

THE A. M. KINNEY AFFILIATION
ESTIMATE DETAILS

DATE: 02NOV89 CLIENT: DOE/WMCO PROJECT NAME: WST PIT RNF CTRL-100% EST PAGE NO.: 33
CLIENT NO.: 02902-33 PROJECT LOCATION: FERNALD, OHIO BY: JJS

CODES/SEQ TAG	DESCRIPTION	QUANT / UNIT SIZE	LABOR HOURS	$LABOR	$FIELD	$OWNER	$SUBCON	$TOTAL
KEY1: MECHANICAL SUBCONTRACT		KEY3: 9900-MARKUPS						
KEY2: 9000-MARKUPS		OPT3: 000-MARKUPS						
05 09 9900 0005	LABOR MARKUP	38939 FCT	0	34150	0	0	0	34.150
	SEE APPENDIX 'C'	QTY05L	(3.00)	(.88)	(0.00)	(0.00)	(0.00)	(.88)
0009900								
05 09 9900 0010	MATERIAL MARKUP	97848 FCT	0	0	33464	0	0	33.464
	SEE APPENDIX 'C'	QTY05F	(3.00)	(0.00)	(.34)	(0.00)	(0.00)	(.34)
0009900								
	000-MARKUPS:		0	34150	33464	0	0	67,614
	9900-MARKUPS:		0	34150	33464	0	0	67,614
	9000-MARKUPS:		0	34150	33464	0	0	67.614
	MECHANICAL SUBCONTRACT:		1544	73089	131312	0	0	204.401

THE A.M. KINNEY AFFILIATION
ESTIMATE DETAILS

DATE: 02NOV89 CLIENT: DOE/WMCO PROJECT NAME: WST PIT RNF CTRL-100% EST PAGE NO.: 36
CLIENT NO.: 02902-33 PROJECT LOCATION: FERNALD, OHIO BY: JJB

CODES/SEQ TAG	DESCRIPTION	QUANT / UNIT SIZE	LABOR HOURS	$LABOR	$FIELD	$OWNER	$SUBCON	$TOTAL
KEY1: ELECTRICAL SUBCONTRACT		KEY3: 2006-STORM SEWERS/DITCHES						
KEY2: 2000-IMPROVEMENTS TO LAND		OPT3: 109-ELECTRICAL						
07 02 2006 0005	400W-120V HIGH PRESSURE	1 EA	5 EL1	124	685	0	0	809
	SODIUM FLOODLIGHT		(5.00)	(124.00)	(685.00)	(0.00)	(0.00)	(809.00)
1092006	W/PHOTOCELL HOLOPHANE							
	'VECTOR' SERIES							
07 02 2006 0010	3/4" RGS CONDUIT	50 LF	5 EL1	124	68	0	0	192
			(.10)	(2.48)	(1.36)	(0.00)	(0.00)	(3.84)
1092006								
07 02 2006 0015	#12 AWG THHN WIRE	150 LF	1 EL1	25	9	0	0	34
			(.007)	(.17)	(.06)	(0.00)	(0.00)	(.23)
1092006								
07 02 2006 0020	INDIVIDUALLY MOUNTED	1 EA	16 EL1	396	645	0	0	1,041
	7.5KVA MINI POWER ZONE		(16.00)	(396.00)	(645.00)	(0.00)	(0.00)	(1041.00)
1092006	480V PRIMARY, 240/120V							
	SECONDARY, W/8 CKT DIST *							
07 02 2006 0021	* PANEL WITH BREAKERS							
	SQUARE D CLASS 7440							
1092006								
07 02 2006 0025	FUSED DISCONNECT SWITCH	1 EA	9 EL1	223	3300	0	0	3,523
	480V-3P 200 AMP NEMA 3R		(9.00)	(223.00)	(3300.00)	(0.00)	(0.00)	(3523.00)
1092006								
07 02 2006 0030	CIRCUIT BREAKER FEEDER	1 EA	3 EL1	74	484	0	0	558
	480VOLT 225AMP TRIP		(3.00)	(74.00)	(484.00)	(0.00)	(0.00)	(558.00)
1092006	NEMA 3R. INDIVIDUALLY							
	MOUNTED							
07 02 2006 0035	CIRCUIT BREAKER FEEDER	1 EA	2 EL1	50	150	0	0	200
	480V-3P 60AMP TRIP		(2.00)	(50.00)	(150.00)	(0.00)	(0.00)	(200.00)
1092006	NEMA 3R. INDIVIDUALLY							
	MOUNTED							

THE A.M. KINNEY AFFILIATION
ESTIMATE DETAILS

DATE: 02NOV89 CLIENT: DOE/WMCO PROJECT NAME: WST PIT RNF CTRL-100% EST PAGE NO.: 35
CLIENT NO.: 02902-33 PROJECT LOCATION: FERNALD, OHIO BY: JJB

CODES/SEQ TAG	DESCRIPTION	QUANT / UNIT SIZE	LABOR HOURS	$LABOR	$FIELD	$OWNER	$SUBCON	$TOTAL
KEY1: ELECTRICAL SUBCONTRACT		KEY3: 2006-STORM SEWERS/DITCHES						
KEY2: 2000-IMPROVEMENTS TO LAND		OPT3: 109-ELECTRICAL						
07 02 2006 0040	6'x6'x6' LONG NEMA 3R	1 EA	1 EL1	25	47	0	0	72
	WIREWAY		(1.00)	(25.00)	(47.00)	(0.00)	(0.00)	(72.00)
1092006								
07 02 2006 0045	200AMP DUAL ELEMENT FUSES	4 EA	1 EL1	25	112	0	0	137
	480 VOLT (TOTAL INCLUDES		(.25)	(6.25)	(28.00)	(0.00)	(0.00)	(34.25)
1092006	ONE SPARE)							
07 02 2006 0050	40' WOOD POLE	1 EA	9 EL1	223	512	0	0	735
			(9.00)	(223.00)	(512.00)	(0.00)	(0.00)	(735.00)
1092006								
07 02 2006 0055	WELDING RECEPTACLE	1 EA	1 EL1	25	50	0	0	75
	480V 60A. NEMA 3R		(1.00)	(25.00)	(50.00)	(0.00)	(0.00)	(75.00)
1092006	ENCLOSURE							
07 02 2006 0060	20AMP 120VOLT 3 WIRE	1 EA	1 EL1	25	25	0	0	50
	RECEPTACLE DUPLEX IN		(1.00)	(25.00)	(25.00)	(0.00)	(0.00)	(50.00)
1092006	NEMA 3R ENCLOSURE							
07 02 2006 0065	2' RGS CONDUIT	250 LF	45 EL1	1116	825	0	0	1,939
			(.13)	(4.46)	(3.30)	(0.00)	(0.00)	(7.76)
1092006								
07 02 2006 0070	1' RGS CONDUIT	160 LF	20 EL1	495	253	0	0	748
			(.125)	(3.09)	(1.58)	(0.00)	(0.00)	(4.68)
1092006								
07 02 2006 0075	3/4' RGS CONDUIT	200 LF	20 EL1	495	270	0	0	765
			(.10)	(2.47)	(1.35)	(0.00)	(0.00)	(3.83)
1092006								
07 02 2006 0080	#4/0 THHN/THWN WIRE	250 LF	9 EL1	223	450	0	0	673
			(.036)	(.89)	(1.80)	(0.00)	(0.00)	(2.69)
1092006								

THE A.M. KINNEY AFFILIATION
ESTIMATE DETAILS

DATE: 02NOV89 CLIENT: DOE/WMCO PROJECT NAME: WST PIT RNF CTRL-100% EST PAGE NO.: 36
CLIENT NO.: 02902-33 PROJECT LOCATION: FERNALD, OHIO BY: JJB

KEY1: ELECTRICAL SUBCONTRACT KEY3: 2006-STORM SEWERS/DITCHES
KEY2: 2000-IMPROVEMENTS TO LAND OPT3: 109-ELECTRICAL

CODES/SEQ TAG	DESCRIPTION	QUANT / UNIT SIZE	LABOR HOURS	$LABOR	$FIELD	$OWNER	$SUBCON	$TOTAL
07 02 2006 0085	#4 AWG THHN/THWN WIRE	100 LF	2 EL1	50	37	0	0	87
			(.02)	(.50)	(.37)	(0.00)	(0.00)	(.87)
1092006								
07 02 2006 0090	#6 AWG THHN/THWN WIRE	50 LF	1 EL1	25	12	0	0	37
			(.02)	(.50)	(.24)	(0.00)	(0.00)	(.74)
1092006								
07 02 2006 0095	#12 AWG THHN/THWN WIRE	200 LF	1 EL1	25	12	0	0	37
			(.005)	(.13)	(.06)	(0.00)	(0.00)	(.19)
1092006								
07 02 2006 0100	3-1/C#4/0 & 1#1/0G MESSENGER SUPPORTED COPPER WIRING W/SUNLIGHT RESISTANT RATING	150 LF	15 EL1	371	300	0	0	671
			(.10)	(2.47)	(2.00)	(0.00)	(0.00)	(4.47)
1092006								
07 02 2006 0105	3/4" RGS CONDUIT	1050 LF	105 EL1	2599	1418	0	0	4.017
			(.10)	(2.48)	(1.35)	(0.00)	(0.00)	(3.83)
1092006								
07 02 2006 0110	#14 AWG THWN COPPER WIRE	10000 LF	62 EL1	1535	420	0	0	1.955
			(.006)	(.15)	(.04)	(0.00)	(0.00)	(.20)
1092006								
07 02 2006 0115	2/C #18 SHIELDED TWISTED WIRE. BELDEN #8760	3900 LF	39 EL1	965	480	0	0	1.445
			(.01)	(.25)	(.12)	(0.00)	(0.00)	(.37)
1092006								
07 02 2006 0120	7/C#14 AWG.600V,90 DEG C COPPER CNTRL CABLE W/PVC JACKET INSTALLED ON WOOD POLES W/MESSENGER CABLE*	1700 LF	85 EL1	2104	2550	0	0	4.654
			(.05)	(1.24)	(1.50)	(0.00)	(0.00)	(2.74)
1092006								

THE A.M. KINNEY AFFILIATION
ESTIMATE DETAILS

DATE: 02NOV89 CLIENT: DOE/WMCO PROJECT NAME: WST PIT RNF CTRL-100% EST PAGE NO.: 37
CLIENT NO.: 02902-33 PROJECT LOCATION: FERNALD, OHIO BY: JJB

CODES/SEQ TAG	DESCRIPTION	QUANT / UNIT SIZE	LABOR HOURS	$LABOR	$FIELD	$OWNER	$SUBCON	$TOTAL
KEY1: ELECTRICAL SUBCONTRACT		KEY3: 2006-STORM SEWERS/DITCHES						
KEY2: 2000-IMPROVEMENTS TO LAND		OPT3: 109-ELECTRICAL						
07 02 2006 0121	* (SUNLIGHT RESISTANT) BRAND-REX TYPE XL-TC							
1092006								
07 02 2006 0125	2/2C#18 SHLD TWISTED PAIR	1700 LF	68 EL1	1683	1955	0	0	3,638
	W/OVERALL JACKET. INSTALL		(.04)	(.99)	(1.15)	(0.00)	(0.00)	(2.14)
1092006	ON WOOD POLES W/MESSENGER CABLE(SUNLIGHT RESISTANT)							
07 02 2006 0130	9'-0"W x 16'-0"L x12"DEEP	1 EA	14 ZB1	338	700	0	0	1,038
	CONCRETE PAD		(14.00)	(338.00)	(700.00)	(0.00)	(0.00)	(1038.00)
1092006								
07 02 2006 0135	150KW DIESEL ENGINE	1 EA	80 ZA1	1993	23850	0	0	25,843
	GENERATOR SET W/OUTDOOR		(80.00)	(1993.00)	(23850.00)	(0.00)	(0.00)	(25843.00)
1092006	ENCLOSURE. 24 HOUR FUEL TANK. ONAN MODEL#150DGDA							
07 02 2006 0140	225AMP-480VOLT-3POLE	1 EA	8 EL1	198	3990	0	0	4,188
	AUTOMATIC TRANSFER SWITCH		(8.00)	(198.00)	(3990.00)	(0.00)	(0.00)	(4188.00)
1092006								
	109-ELECTRICAL:		628	15552	43609	0	0	59,161
	2006-STORM SEWERS/DITCHES:		628	15552	43609	0	0	59,161
	2000-IMPROVEMENTS TO LAND:		628	15552	43609	0	0	59,161

THE A. M. KINNEY AFFILIATION
ESTIMATE DETAILS

DATE: 02NOV89 CLIENT: DOE/WMCO PROJECT NAME: JST FIT RNF CTRL-100% EST PAGE NO.: 38
CLIENT NO.: 02902-33 PROJECT LOCATION: FERNALD, OHIO BY: JJB

CODES/SEQ TAG	DESCRIPTION	QUANT / UNIT SIZE	LABOR HOURS	$LABOR	$FIELD	$OWNER	$SUBCON	$TOTAL
KEY1: ELECTRICAL SUBCONTRACT		KEY3: 9900-MARKUPS						
KEY2: 9000-MARKUPS		OPT3: 000-MARKUPS						
07 09 9900 0005	LABOR MARKUP	15552 FCT	0	13110	0	0	0	13,110
	SEE APPENDIX "C"	QTY07L	(0.00)	(.84)	(0.00)	(0.00)	(0.00)	(.84)
0009900								
07 09 9900 0010	MATERIAL MARKUP	43609 FCT	0	0	14914	0	0	14,914
	SEE APPENDIX "C"	QTY07F	(0.00)	(0.00)	(.34)	(0.00)	(0.00)	(.34)
0009900								
	000-MARKUPS:		0	13110	14914	0	0	28,024
	9900-MARKUPS:		0	13110	14914	0	0	28,024
	9000-MARKUPS:		0	13110	14914	0	0	28,024
	ELECTRICAL SUBCONTRACT:		628	28662	58523	0	0	87,185

THE A.M. KINNEY AFFILIATION
ESTIMATE DETAILS

DATE: 02NOV89 CLIENT: DOE/WMCO PROJECT NAME: WST PIT RNF CTRL-100% EST PAGE NO.: 39
CLIENT NO.: 02902-33 PROJECT LOCATION: FERNALD, OHIO BY: JJB

CODES/SEQ TAG	DESCRIPTION	QUANT / UNIT SIZE	LABOR HOURS	$LABOR	$FIELD	$OWNER	$SUBCON	$TOTAL
KEY1: INSTRUMENT'N SUB-SUBCONTR		KEY3: 2006-STORM SEWERS/DITCHES						
KEY2: 2000-IMPROVEMENTS TO LAND		OPT3: 110-INSTRUMENTATION						
09 02 2006 0005	LEVEL SENSOR TRANS. AT	2 EA	24 PF1	618	4100	0	0	4,718
	COLLECTION SUMP AND		(12.00)	(309.00)	(2050.00)	(0.00)	(0.00)	(2359.00)
1102006	OVERFLOW WIER - TAG LT							
09 02 2006 0010	PRESSURE GAGE FOR PUMPS	1 EA	3 PF1	77	100	0	0	177
	AT COLLECTION SUMP		(3.00)	(77.00)	(100.00)	(0.00)	(0.00)	(177.00)
1102006	TAG PI							
09 02 2006 0015	VORTEX FLOWMETER 18"1 ON	1 EA	8 PF1	206	4000	0	0	4,206
	PUMP DISCHARGE TO BDNSL		(8.00)	(206.00)	(4000.00)	(0.00)	(0.00)	(4206.00)
1102006	TAG FE, FT							
09 02 2006 0020	REMOTE CONTROL BOX AT BDN	1 EA	5 PF1	129	1700	0	0	1,829
	BLDG. WALL MOUNTED (2x2)		(5.00)	(129.00)	(1700.00)	(0.00)	(0.00)	(1829.00)
1102006	WITH LI. LSHH. LAHH. PL'S							
	-PREWIRED							
09 02 2006 0025	2-PEN RECORDER. 4-20 MADC	1 EA	16 PF1	412	3500	0	0	3,912
	INPUT. TOTALIZER ON ONE		(16.00)	(412.00)	(3500.00)	(0.00)	(0.00)	(3912.00)
1102006	PEN. WITH WINTERIZED							
	ENCLOSURE. TAG-LIR.FQR							
09 02 2006 0030	2" SOLENOID VALVE ON	1 EA	8 PF1	206	350	0	0	556
	DRAIN LINE BACK TO SUMP		(8.00)	(206.00)	(350.00)	(0.00)	(0.00)	(556.00)
1102006	TAG-FV							
	110-INSTRUMENTATION:		64	1648	13750	0	0	15,398
	2006-STORM SEWERS/DITCHES:		64	1648	13750	0	0	15,398
	2000-IMPROVEMENTS TO LAND:		64	1648	13750	0	0	15,398

THE A.M. KINNEY AFFILIATION
ESTIMATE DETAILS

DATE: 02NOV89 CLIENT: DOE/WMCO PROJECT NAME: WST PIT RNF CTRL-100% EST PAGE NO.: 60
CLIENT NO.: 02902-33 PROJECT LOCATION: FERNALD, OHIO BY: JJB

CODES/SEQ TAG	DESCRIPTION	QUANT / UNIT SIZE	LABOR HOURS	$LABOR	$FIELD	$OWNER	$SUBCON	$TOTAL
KEY1: INSTRUMENT'N SUB-SUBCONTR		KEY3: 9900-MARKUPS						
KEY2: 9000-MARKUPS		OPT3: 000-MARKUPS						
09 09 9900 0005	LABOR MARKUP	1648 FCT	0	1831	0	0	0	1,831
	SEE APPENDIX 'C'	QTYCOL	(0.00)	(1.11)	(0.00)	(0.00)	(0.00)	(1.11)
0009900								
09 09 9900 0010	MATERIAL MARKUP	13750 FCT	0	0	7384	0	0	7,384
	SEE APPENDIX 'C'	QTYCOF	(0.00)	(0.00)	(.54)	(0.00)	(0.00)	(.54)
0009900								
		000-MARKUPS:	0	1831	7384	0	0	9,215
		9900-MARKUPS:	0	1831	7384	0	0	9,215
		9000-MARKUPS:	0	1831	7384	0	0	9,215
		INSTRUMENT'N SUB-SUBCONTR:	64	3479	21134	0	0	24,613
		ESTIMATE TOTALS:	9395	443513	579438	0	0	1,022,956

A. M. KINNEY, INC.
CONSULTING ENGINEERS

APPENDIX A - WAGE RATES

07/12/89 FMPC CRAFT WAGE RATES RKR

CRAFTS	BASE	H & W	PENSION	APPREN & OTHER	SUBTOTAL	FICA 7.51%	SUI 8.0%	FUI 0.6%	W/C 2.749% GROSS	TOTAL LOADED RATE	EXPIRE DATE
ASB.WORKER	19.12	2.02	2.00	0.06	23.20	1.44	1.53	0.11	0.53	26.81	063089
BOILERMAKER	19.75	2.25	1.50	0.12	23.62	1.48	1.58	0.12	0.54	27.34	090390
BRICKLAYER*	17.12	2.58	1.00	0.00	20.70	1.29	1.37	0.10	0.47	23.93	053190
CARPENTER*	17.60	1.80	1.60	0.18	21.18	1.32	1.41	0.11	0.48	24.49	053192
CEM FINISHER	16.70	1.15	1.30	0.30	19.45	1.25	1.34	0.10	0.46	22.60	053189
ELECTRICIAN*	18.10	1.85	1.30	0.09	21.34	1.36	1.45	0.11	0.50	24.75	053190
I.W.-STRUCT*	17.38	2.25	2.30	0.08	22.01	1.31	1.39	0.10	0.48	25.29	053190
I.W.-ROD*	18.38	2.25	2.30	0.02	22.95	1.38	1.47	0.11	0.51	26.42	053192
LABORER*	16.10	1.25	1.25	0.00	18.60	1.21	1.29	0.10	0.44	21.64	053192
MILLWRIGHT*	17.94	1.81	1.65	0.18	21.58	1.35	1.44	0.11	0.49	24.96	090190
OPER. ENGR.	17.79	2.16	2.00	0.25	22.20	1.34	1.42	0.11	0.49	25.56	043089
PAINTER-INDUSTRIAL	17.77	0.00	1.10	0.03	18.90	1.33	1.42	0.11	0.49	22.25	060890
PIPEFITTER*	18.04	1.65	2.60	0.08	22.37	1.35	1.44	0.11	0.50	25.77	053190
PLUMBER *	17.90	2.17	1.80	0.12	21.99	1.34	1.43	0.11	0.49	25.37	053190
ROOFER	19.00	0.00	1.75	0.00	20.75	1.43	1.52	0.11	0.52	24.33	073190
SHEET METAL	16.30	1.68	1.24	0.07	19.29	1.22	1.30	0.10	0.45	22.36	053189
SPRKLR FITTER	19.40	2.20	1.65	0.10	23.35	1.46	1.55	0.12	0.53	27.01	033191
TEAMSTER-DRIVER	14.15	2.02	1.73	0.00	17.90	1.06	1.13	0.08	0.39	20.57	111591

*Data revised since previous issue.

APPENDIX "A"
PAGE 1 of 1

45

118

A. M. KINNEY, INC.
CONSULTING ENGINEERS

APPENDIX B - ESCALATION

SEP 28 1989

COPY: BRITTON
REED
SCHEER
WEINREICH
KINNETT
9/28/89

Department of Energy
FMPC Site Office
P.O. Box 398705
Cincinnati, Ohio 45239-8705
(513) 738-6319

APPENDIX B

September 27, 1989
DOE-1612-89

President
Westinghouse Materials Company
of Ohio
P. O. Box 398704
Cincinnati, Ohio 45239-8704

CY: (3)

Dear Sir:

CONSTRUCTION ESCALATION RATES

Based on updated HQ Economic Escalation Indices for DOE Construction Projects and local assessment of economic factors, the following rates are approved for all project estimates to be submitted in the FY 1992 budget.

FY 1990	4.5%
FY 1991	5.0%
FY 1992	5.0%
After FY 1992	5.5%

If you have any questions, please contact Carlos J. Fermaintt, of my staff, at extension 6157.

Sincerely,

James A. Rearsmder
FMPC Site Manager

DP-84:Fermaintt

cc:

P. C. Weddle, WMCO
W. A. Weinreich, WMCO

A. M. KINNEY, INC.
CONSULTING ENGINEERS

APPENDIX C - MARKUPS

APPENDIX "C"

A. M. KINNEY, INC.
CONSULTING ENGINEERS

PERCENTAGE MARKUPS

	General Prime Contractor		Fencing Subcontractor		Mechanical Subcontractor	
	Mat'l	Labor	Mat'l	Labor	Mat'l	Labor
JCF	-	6	-	6	-	6
Unlisted Items	-	-	-	-	-	-
Small Tools	-	1	-	1	-	1
Scaffolding	-	1	-	1	-	1
Cleanup	-	2	-	2	-	2
Temp. Facil. & Svcs.	-	2	-	2	-	2
Field Supervision	-	20	-	2	-	4
		26		8		10
Health Physics	-	20	-	20	-	20
Overhead	12	12	20	20	15	15
Profit	10	10	15	15	10	10
Bond	1	1	1	1	1	1
Sub Markup	-	-	-	-	-	-
Prime Markup	-	-	5	5	5	5
Total Markup (Compounded)	24.4	99.4	46.3	101.0	34.2	87.7

APPENDIX "C"

A. M. KINNEY, INC.
CONSULTING ENGINEERS

PERCENTAGE MARKUPS

	Electrical Subcontractor		Instrumentation Sub-Subcontractor	
	Mat'l	Labor	Mat'l	Labor
JCF	-	6	-	6
Unlisted Items	-	-	-	-
Small Tools	-	1	-	1
Scaffolding	-	1	-	1
Cleanup	-	2	-	2
Temp. Facil. & Svcs.	-	2	-	2
Field Supervision	-	2	-	2
		8		8
Health Physics	-	20	-	20
Overhead	15	15	20	20
Profit	10	10	15	15
Bond	1	1	1	1
Sub Markup	-	-	5	5
Prime Markup	5	5	5	5
Total Markup (Compounded)	34.2	84.3	53.7	111.1

A. M. KINNEY, INC.
CONSULTING ENGINEERS

APPENDIX D - JOB CONDITION FACTORS

APPENDIX "D"

JOB CONDITIONS FACTORS (SITE)	MIN-MAX % RANGE	TYPICAL %	ALL CONTRACTORS ACTUAL%
Height/below grade (ladders, scaffolding, ditches)	0 - 4	2	1
Weather (rain, mud, ice, cold, heat, humidity)	0 - 5	2	3
Fumes, Dusts, Hazards	0 - 5	1	
Non-Productive Time (NPT) - Breaks, Scheduled work cancelled due to weather, bomb alerts, safety meetings, FMPC Orientation	1 - 5	2	2
Material Handling Conditions (distance, recvg.)	0 - 3	1	
Material Storage (availability of WH storage)	0 - 3	0	
Support Facilities - shop, warehouse (availability, capability)	0 - 3	0	
Tight Working Area (cramped shaft, crawl space)	0 - 2	0	
Congestion - Job (equipment, piping, buildings proximity)	0 - 3	2	
Qualification of welders	0 - 2	0	
Interference w/other crafts	0 - 3	1	
Abnormal Cleanup Requirements	0 - 5	0	
(Stringent) Testing & Inspection Requirements	0 - 5	2	
Rush Schedule	0 - 5	0	
			6

A. M. KINNEY, INC.
CONSULTING ENGINEERS

APPENDIX E - CONTINGENCY

CONTINGENCY

1. Contingency - Funds to cover incomplete design and errors, unforeseen and unpredictable conditions (e.g. construction disturbances due to operations), market conditions (e.g. prices and competition), complexity of project (e.g. developmental, high levels of contamination, etc.). Contingency guidelines are provided in the E&CCM and should be reviewed during estimate-preparation for proper application. A condensed version is listed below for selecting the proper contingency percentage for the type of estimate being prepared.

TABLE 1

Type of Estimate	Overall Contingency Allowances
a. Planning (Prior to CDR)	
Standard	20% - 30%
Experimental/Special Conditions (1)	Up to 50%
b. Budget (Based upon CDR)	
Standard	15% - 25%
Experimental/Special Conditions (1)	Up to 40%
c. Title I	10% - 20%
d. Title II Design	5% - 15%
e. Government (Bid Check)	Generally the same as Title II, adjusted to suit market conditions.
f. Current Working Estimates	See Table 2 Next Page
g. Independent Estimate	To suit status of project and estimator's judgment.

2. The percentage used for contingency as determined from the above guidelines may be altered to reflect the type of construction. The following percentages are accumulatively added or deducted from the above percentages.

1. Underground lines near Central Facility	+ 2% to + 5%
2. Buildings	- 1% to - 3%
3. Contaminated areas	+ 5% to +10%

After a rate of contingency is determined, the contingency is applied to all the estimate including escalation.

---

(1) A higher range may be required for state-of-art/experimental projects, high-quality level required (i.e. reactors), highly contaminated work areas, and other special conditions. For example: total contingency including such factors may vary up to 50 percent for planning estimates, and up to 40 percent for budget estimates. Title I, Title II Design may require 5 or 10 percent increase in contingency for such conditions. Reasons for such higher contingencies should be explained.

CONTINGENCY ALLOWANCES FOR CURRENT WORKING ESTIMATES

TABLE 2

	ITEM CONTINGENCY ON REMAINING COSTS NOT INCURRED
A. ENGINEERING	
Before detailed estimates	Same % as in Budget Estimate
After detailed estimates	10%
B. EQUIPMENT PROCUREMENT	
Before bid	Same % used in estimate types b, c, or d, whichever is latest (Table 1)
After Award:	
CPAF Contract	15%
Fixed-Price Contract	1% - 5%
After Delivery to Site (if no rework)	0%
C. CONSTRUCTION	
Prior to Award	Same % used in estimate types b, c, or d, whichever is latest
After Award:	
CPAF Contract	15% - 17-1/2%
Fixed Price Contract	3% - 8%

TOTAL CONTINGENCY (CALCULATED) Total of above item contingencies

A. M. KINNEY, INC.
CONSULTING ENGINEERS

APPENDIX F - DECONTAMINATION AND DISPOSAL

APPENDIX "F"

A. M. KINNEY, INC.
CONSULTING ENGINEERS

WASTEPIT AREA STORMWATER RUNOFF CONTROL

DECONTAMINATION AND DISPOSAL COSTS

$$339 \text{ CY Dirt} \times 2{,}970 = \frac{1{,}006{,}830}{5{,}550\# \text{ per box}} = \frac{182}{7 \text{ boxes per load}} = 26$$

26 Loads @ $21,000 = $546,000

APPENDIX A - EQUIPMENT COORDINATION SCHEDULE

SPEC. 02902-3301
OCTOBER 31, 1989
(100% PRELIMINARY)

EQUIPMENT COORDINATION SCHEDULE

THE FOLLOWING CODES ARE USED IN THE HEADINGS FOR EACH SHEET -

ITEM	EQUIPMENT TYPE AND DESIGNATION
QU	QUANTITY OF IDENTICAL ITEMS
VOLTS	VOLTAGE & PHASE PHASE DESIGNATIONS TO BE AS FOLLOWS - 1 PHASE UNITS REQUIRING 2 WIRE SERVICE USE 1 1 PHASE UNITS REQUIRING 3 WIRE SERVICE USE 2 3 PHASE UNITS REQUIRING 3 WIRE SERVICE USE 3 3 PHASE UNITS REQUIRING 4 WIRE SERVICE USE 4
HP/KW/A	HORSEPOWER OF MOTOR, UNLESS INDICATED K FOR KW, A FOR AMPERES
F	FURNISHED BY CONTRACTOR
I	INSTALLED BY CONTRACTOR
W	WIRED BY CONTRACTOR
STARTER	INCLUDES CONTACTOR FOR HEATER

THE FOLLOWING CODES ARE USED IN THE SCHEDULE UNDER THE HEADINGS -

CONTROL TYPE

HOA	HAND-OFF-AUTO SELECTOR SWITCH
LSH	LEVEL SWITCH HIGH
LSL	LEVEL SWITCH LOW
SOV	SOLENOID VALVE (FV-01A)
SPCL	SPECIAL CONTROL SEE EQUIP. SPEC.

LOCATION

N NONE
DWG REFER TO DRAWINGS
S AT STARTER
CP SUMP PUMP SEQUENCEER/CONTROLLER
CONTROL PANEL
BDN BDN BUILDING CONTROL ROOM

STARTER TYPE

FVNR MAGNETIC FULL VOLTAGE NONREVERSING

CONTRACTOR OR SUPPLIER

P PLUMBING
E ELECTRICAL

SPEC. 02902-3301
OCTOBER 31, 1989
(100% PRELIMINARY)

EQUIPMENT					DISCONNECT		STARTER			CONTROL			
ITEM	QU	HP/KW/A	VOLTS	FIW	LOCATION	FIW	LOCATION	TYPE	FIW	V	LOCATION	TYPE	FIW
SUMP PUMP	4	30	460-3	PPP	N		CP	FVNR	PPE	120	S	HOA	PPE
											DWG	LSH	PPE
											DWG	LSL	PPE
											DWG	SOV	PPE
											S	SPCL	PPP
LEVEL TRANSMIT. LT-01A LT-01B	2		24 DC	PPE	N		N				N		
FLOW TRANSMIT. FT-01A	1		24 DC	PPE	N		N				N		
INDICAT.& ALARM BOX	1		120	PPE	N		N			120	BDN	PKG	PPE
FIELD INSTR. HOUSING	1		120	PPE	N		N				N		

31/SW

Refer To EPA Comment #41

456

OEPA Permit No. 1IO00004*BD

Application No. OH0009580

Effective Date: February 12, 1990

Expiration Date: February 9, 1995

OHIO ENVIRONMENTAL PROTECTION AGENCY

AUTHORIZATION TO DISCHARGE UNDER THE

NATIONAL POLLUTANT DISCHARGE ELIMINATION SYSTEM

In compliance with the provisions of the Federal Water Pollution Control Act, as amended (33 U.S.C. 1251 et. seq. hereinafter referred to as "the Act"), and the Ohio Water Pollution Control Act (Ohio Revised Code Section 6111),

The Department of Energy

is authorized by the Ohio Environmental Protection Agency, hereafter referred to as "Ohio EPA", to discharge from the Feed Materials Production Center wastewater treatment works located at 7400 Willey Road, Fernald, Ohio, Hamilton County

and discharging to Paddy's Run and the Great Miami River

in accordance with the conditions specified in Parts I, II and III of this permit.

This permit is conditioned upon payment of applicable fees as required by Section 3745.11 of the Ohio Revised Code.

This permit and the authorization to discharge shall expire at midnight on the expiration date shown above. In order to receive authorization to discharge beyond the above date of expiration, the permittee shall submit such information and forms as are required by the Ohio EPA no later than 180 days prior to the above date of expiration.

Richard L. Shank
Director

6297P

Form EPA 4328

135

456

PART I, A. - FINAL EFFLUENT LIMITATIONS AND MONITORING REQUIREMENTS

1. During the period beginning on the effective date of this permit and lasting until the expiration date, the permittee is authorized to discharge in accordance with the following limitations and monitoring requirements from the following outfall: 1I000004001. SEE PART II, OTHER REQUIREMENTS, for location of effluent sampling.

EFFLUENT CHARACTERISTIC		DISCHARGE LIMITATIONS				MONITORING REQUIREMENTS	
		Concentration Other Units (Specify)		Loading* kg/day			
REPORTING CODE/UNITS	PARAMETER	30 DAY	DAILY	30 DAY	DAILY	Measurement Frequency	Sample Type
00300 MG/L	Dissolved Oxygen	-	(5.0 Min)	-	-	1/Week	Grab
00530 MG/L	Residue, Total Nonfilterable	30	45	99	149	1/Week	24 Hr. Comp.
00550 MG/L	Oil and Grease, Total	15	15	50	50	1/Week	Grab
00610 MG/L	Nitrogen, Ammonia (NH_3)	-	-	-	-	1/Week	24 Hr. Comp.
00620 MG/L	Nitrate-N	-	-	-	-	1/Week	24 Hr. Comp.
00720 MG/L	Cyanide, Total	0.036	0.076	0.120	0.251	1/Week	Grab
00951 MG/L	Fluoride, Total (F)	-	-	-	-	1/Week	24 Hr. Comp.
01034 UG/L	Chromium, Total (Cr)	-	-	-	-	1/Week	24 Hr. Comp.
01042 UG/L	Copper, Total (Cu)	23	94	0.077	0.310	1/Week	24 Hr. Comp.
01051 UG/L	Lead, Total (Pb)	60	776	0.199	2.562	1/Week	24 Hr. Comp.
01067 UG/L	Nickel, Total (Ni)	-	-	-	-	1/Week	24 Hr. Comp.
01077 UG/L	Silver, Total (Ag)	12	26	0.040	0.086	1/Week	24 Hr. Comp.
01220 UG/L	Chromium, Dissolved Hexavalent	-	-	-	-	1/Week	24 Hr. Comp.
50050 MGD	Flow Rate	-	-	-	-	Daily	24 Hr. Total
80082 MG/L	Biochemical Oxygen Demand, Carb.	20	30	66	99	1/Week	24 Hr. Comp.

* Loadings are based on 0.872 MGD

2. The pH (Reporting Codes 00402 (minimum) and 00401 (maximum)) shall not be less than 6.5 S.U. nor greater than 9.0 S.U. and shall be monitored continuously.

3. Samples taken in compliance with monitoring requirements specified above shall be taken at Sampling Stations described in Part II, OTHER REQUIREMENTS.

456

PART I, A. - FINAL EFFLUENT LIMITATIONS AND MONITORING REQUIREMENTS

1. During the period beginning on the effective date of this permit and lasting until the expiration date, the permittee is authorized to discharge in accordance with the following limitations and monitoring requirements from the following outfall: 1I000004002. SEE PART II, OTHER REQUIREMENTS, for location of effluent sampling.

EFFLUENT CHARACTERISTIC		DISCHARGE LIMITATIONS				MONITORING REQUIREMENTS	
		Concentration		Loading			
REPORTING		Other Units (Specify)		kg/day		Measurement	Sample**
CODE/UNITS	PARAMETER	30 DAY	DAILY	30 DAY	DAILY	Frequency*	Type
00530 MG/L	Residue, Total Nonfilterable	-	100	-	-	Daily	Composite
00550 MG/L	Oil and Grease, Total	-	15	-	-	Daily	Grab
00610 MG/L	Nitrogen, Ammonia (NH_3)	-	-	-	-	Daily	Composite
00620 MG/L	Nitrogen, Nitrate (NO_3)	-	-	-	-	Daily	Composite
00951 MG/L	Fluoride, Total (F)	-	-	-	-	Daily	Composite
01034 UG/L	Chromium, Total (Cr)	-	3986	-	-	Daily	Composite
01042 UG/L	Copper, Total (Cu)	-	45	-	-	Daily	Composite
01067 UG/L	Nickel, Total (Ni)	-	3137	-	-	Daily	Composite
01077 UG/L	Silver, Total (Ag)	-	11.6	-	-	Daily	Composite
01220 UG/L	Chromium, Hex. (Dissolved)	-	19	-	-	Daily	Composite
50050 MGD	Flow Rate	-	-	-	-	Daily	24 Hr. Total Estimate

* When discharging.
** Four grab samples shall be composited at varying times throughout the discharge event.

This discharge shall consist only of stormwater.

2. The pH (Reporting Code 00400) shall not be less than 6.5 S.U. nor greater than 9.0 S.U. and shall be monitored daily by grab sample.*

3. Samples taken in compliance with monitoring requirements specified above shall be taken at Sampling Stations described in Part II, OTHER REQUIREMENTS.

PART I, A. - INTERIM EFFLUENT LIMITATIONS AND MONITORING REQUIREMENTS

1. During the period beginning on the effective date of this permit and lasting no later than September 27, 1990, the permittee is authorized to discharge in accordance with the following limitations and monitoring requirements from the following outfall: 1I000004601. SEE PART II, OTHER REQUIREMENTS, for location of effluent sampling.

EFFLUENT CHARACTERISTIC		DISCHARGE LIMITATIONS				MONITORING REQUIREMENTS	
		Concentration Other Units (Specify)		Loading* kg/day			
REPORTING CODE/UNITS	PARAMETER	30 DAY	DAILY	30 DAY	DAILY	Measurement Frequency	Sample Type
00310 MG/L	Biochemical Oxygen Demand, 5 Day	30	45	40	60	1/Week	24 Hr. Comp.
00530 MG/L	Residue, Total Nonfilterable	30	45	40	60	1/Week	24 Hr. Comp.
00610 MG/L	Nitrogen, Ammonia (NH_3)	-	-	-	-	1/Week	24 Hr. Comp.
00951 MG/L	Fluoride, Total (F)	1.7	4.8	2.2	6.3	1/Week	24 Hr. Comp.
01034 UG/L	Chromium, Total (Cr)	12	29	0.0162	0.0378	1/Week	24 Hr. Comp.
01042 UG/L	Copper, Total (Cu)	48	98	0.0637	0.1295	1/Week	24 Hr. Comp.
01067 UG/L	Nickel, Total (Ni)	30	44	0.0403	0.0586	1/Week	24 Hr. Comp.
31616 #/100ML	Fecal Coliform (Summer Only)	1000	2000	-	-	1/Week	24 Hr. Comp.
50050 MGD	Flow Rate	-	-	-	-	Daily	24 Hr. Total

* Loadings are based on 0.350 MGD.

2. The pH (Reporting Codes 00402 (minimum) and 00401 (maximum)) shall not be less than 6.5 S.U. nor greater than 9.0 S.U. and shall be monitored continuously.

3. Samples taken in compliance with monitoring requirements specified above shall be taken at Sampling Stations described in Part II, OTHER REQUIREMENTS.

PART I, A. - FINAL EFFLUENT LIMITATIONS AND MONITORING REQUIREMENTS

1. During the period beginning no later than September 28, 1990 and lasting until the expiration date, the permittee is authorized to discharge in accordance with the following limitations and monitoring requirements from the following outfall: 1I000004601. SEE PART II, OTHER REQUIREMENTS, for location of effluent sampling.

EFFLUENT CHARACTERISTIC		DISCHARGE LIMITATIONS				MONITORING REQUIREMENTS	
		Concentration Other Units (Specify)		Loading** kg/day			
REPORTING CODE/UNITS	PARAMETER	30 DAY	DAILY	30 DAY	DAILY	Measurement Frequency	Sample Type
00310 MG/L	Biochemical Oxygen Demand, 5 Day	20	40	9.5	19	1/Week	24 Hr. Comp.
00530 MG/L	Residue, Total Nonfilterable	20	40	9.5	19	1/Week	24 Hr. Comp.
00610 MG/L	Nitrogen, Ammonia (NH_3)	-	-	-	-	1/Week	24 Hr. Comp.
00951 MG/L	Fluoride, Total (F)	2.3	5.1	1.08	2.43	1/Week	24 Hr. Comp.
01034 UG/L	Chromium, Total (Cr)	13	32	0.006	0.015	1/Week	24 Hr. Comp.
01042 UG/L	Copper, Total (Cu)	53	112	0.025	0.053	1/Week	24 Hr. Comp.
01067 UG/L	Nickel, Total (Ni)	32	49	0.015	0.023	1/Week	24 Hr. Comp.
31616 #/100ML	Fecal Coliform* (Summer Only)	1000	2000	-	-	1/Week	24 Hr. Comp.
50050 MGD	Flow Rate	-	-	-	-	Daily	24 Hr. Total

* Summer only.
** Loadings are based on a flow rate of 0.125 MGD.

2. The pH (Reporting Codes 00402 (minimum) and 00401 (maximum)) shall not be less than 6.5 S.U. nor greater than 9.0 S.U. and shall be monitored continuously.

3. Samples taken in compliance with monitoring requirements specified above shall be taken at Sampling Stations described in Part II, OTHER REQUIREMENTS.

PART I, A. - FINAL EFFLUENT LIMITATIONS AND MONITORING REQUIREMENTS

1. During the period beginning on the effective date of this permit and lasting until the expiration date, the permittee is authorized to discharge in accordance with the following limitations and monitoring requirements from the following outfall: 1I000004602. SEE PART II, OTHER REQUIREMENTS, for location of effluent sampling.

EFFLUENT CHARACTERISTIC		DISCHARGE LIMITATIONS				MONITORING REQUIREMENTS	
		Concentration Other Units (Specify)		Loading* kg/day			
REPORTING CODE/UNITS	PARAMETER	30 DAY	DAILY	30 DAY	DAILY	Measurement Frequency	Sample Type
01034 UG/L	Chromium, Total (Cr)	41	54	0.010	0.013	1/Week	24 Hr. Comp.
01042 UG/L	Copper, Total (Cu)	66	111	0.016	0.027	1/Week	24 Hr. Comp.
01067 UG/L	Nickel, Total (Ni)	91	165	0.022	0.040	1/Week	24 Hr. Comp.
01220 UG/L	Chromium, Dissolved Hexavalent	12	17	0.003	0.004	1/Week	24 Hr. Comp.
50050 MGD	Flow Rate	-	-	-	-	Daily	24 Hr. Total

* Loadings are based on 0.064 MGD.

2. The pH (Reporting Code 00400) shall not be less than 6.5 S.U. nor greater than 9.0 S.U. and shall be monitored 1/week by grab sample.

3. Samples taken in compliance with monitoring requirements specified above shall be taken at Sampling Stations described in Part II, OTHER REQUIREMENTS.

PART I, A. - FINAL EFFLUENT LIMITATIONS AND MONITORING REQUIREMENTS

1. During the period beginning on the effective date of this permit and lasting until the expiration date, the permittee is authorized to discharge in accordance with the following limitations and monitoring requirements from the following outfall: 1IO00004603.. SEE PART II, OTHER REQUIREMENTS, for location of effluent sampling.

EFFLUENT CHARACTERISTIC		DISCHARGE LIMITATIONS				MONITORING REQUIREMENTS	
		Concentration		Loading			
REPORTING		Other Units (Specify)		kg/day		Measurement	Sample
CODE/UNITS	PARAMETER	30 DAY	DAILY	30 DAY	DAILY	Frequency	Type

During the period in which all four of the biodenitrification towers will be temporarily out of operation (due to the construction of the biodenitrification facility) and lasting a maximum of 16 weeks, the permittee will be permitted to discharge excess stormwater from the clearwell via internal monitoring station 1IO00004603 to manhole #175.

The permittee shall provide written notice to the Ohio EPA Southwest District office 30 days prior to the time in which all four biodenitrification towers will be temporarily out of operation. The notice shall specify the starting dates and ending dates. In no case shall any discharge occur beyond the aforementioned time period.

Once the biodenitrification towers are back in operation, sometime within the above permitted time frame, stormwater from the clearwell shall then be pumped only to the biosurge lagoon without further exception.

PART I, A. - FINAL EFFLUENT LIMITATIONS AND MONITORING REQUIREMENTS

1. During the period beginning on the effective date of this permit and lasting until the expiration date, the permittee is authorized to discharge in accordance with the following limitations and monitoring requirements from the following outfall: 1I000004604. SEE PART II, OTHER REQUIREMENTS, for location of effluent sampling.

EFFLUENT CHARACTERISTIC		DISCHARGE LIMITATIONS				MONITORING REQUIREMENTS	
		Concentration Other Units (Specify)		Loading kg/day			
REPORTING CODE/UNITS	PARAMETER	30 DAY	DAILY	30 DAY	DAILY	Measurement Frequency	Sample Type
00530 MG/L	Residue, Total Nonfilterable	30	100	-	-	1/Week	24 Hr. Comp.
00550 MG/L	Oil and Grease, Total	15	15	-	-	1/Week	Grab
00620 MG/L	Nitrate-N	-	-	-	-	1/Week	24 Hr. Comp.
00951 MG/L	Fluoride, Total (F)	-	-	-	-	1/Week	24 Hr. Comp.
50050 MGD	Flow Rate	-	-	-	-	Daily	24 Hr. Total

2. The pH (Reporting Codes 00402 (minimum) and 00401 (maximum)) shall not be less than 6.5 S.U. nor greater than 9.0 S.U. and shall be monitored continuously.

3. Samples taken in compliance with monitoring requirements specified above shall be taken at Sampling Stations described in Part II, OTHER REQUIREMENTS.

PART I, A. - FINAL EFFLUENT LIMITATIONS AND MONITORING REQUIREMENTS

1. During the period beginning on the effective date of this permit and lasting until the expiration date, the permittee is authorized to discharge in accordance with the following limitations and monitoring requirements from the following outfall: 1I000004605. SEE PART II, OTHER REQUIREMENTS, for location of effluent sampling.

EFFLUENT CHARACTERISTIC		DISCHARGE LIMITATIONS				MONITORING REQUIREMENTS	
		Concentration		Loading*			
REPORTING		Other Units (Specify)		kg/day		Measurement	Sample
CODE/UNITS	PARAMETER	30 DAY	DAILY	30 DAY	DAILY	Frequency	Type
00310 MG/L	Biochemical Oxygen Demand, 5 Day	30	45	26	38	1/Week	24 Hr. Comp.
00530 MG/L	Residue, Total Nonfilterable	30	45	26	38	1/Week	24 Hr. Comp.
00610 MG/L	Nitrogen, Ammonia (NH_3)	-	-	-	-	1/Week	24 Hr. Comp.
00620 MG/L	Nitrate-N	72.7	145	62	124	1/Week	24 Hr. Comp.
00951 MG/L	Fluoride, Total (F)	1.3	4.5	1.1187	3.8247	1/Week	24 Hr. Comp.
01034 UG/L	Chromium, Total (Cr)	12	27	0.0101	0.0226	1/Week	24 Hr. Comp.
01042 UG/L	Copper, Total (Cu)	45	90	0.0387	0.0770	1/Week	24 Hr. Comp.
01067 UG/L	Nickel, Total (Ni)	29	42	0.0251	0.0361	1/Week	24 Hr. Comp.
01220 UG/L	Chromium, Dissolved Hexavalent	-	-	-	-	1/Week	24 Hr. Comp.
50050 MGD	Flow Rate	-	-	-	-	Daily	24 Hr. Total

* Loadings are based on 0.2252 MGD

2. The pH (Reporting Codes 00402 (minimum) and 00401 (maximum)) shall be monitored continuously.

3. Samples taken in compliance with monitoring requirements specified above shall be taken at Sampling Stations described in Part II, OTHER REQUIREMENTS.

PART I, A. - FINAL EFFLUENT LIMITATIONS AND MONITORING REQUIREMENTS

1. During the period beginning on the effective date of this permit and lasting until the expiration date, the permittee is authorized to discharge in accordance with the following limitations and monitoring requirements from the following outfall: 1I000004606. SEE PART II, OTHER REQUIREMENTS, for location of effluent sampling.

EFFLUENT CHARACTERISTIC		DISCHARGE LIMITATIONS				MONITORING REQUIREMENTS	
		Concentration		Loading			
REPORTING		Other Units (Specify)		kg/day		Measurement	Sample
CODE/UNITS	PARAMETER	30 DAY	DAILY	30 DAY	DAILY	Frequency	Type
00530 MG/L	Residue, Total Nonfilterable	-	-	-	-	Daily*	24 Hr. Comp.
00550 MG/L	Oil and Grease	-	-	-	-	Daily*	Grab
50050 MGD	Flow Rate	-	-	-	-	Daily*	24 Hr. Total

* When discharging.

2. The pH (Reporting Codes 00402 (minimum) and 00401 (maximum)) shall not be less than 6.5 S.U. nor greater than 9.0 S.U. and shall be monitored continuously.

3. Samples taken in compliance with monitoring requirements specified above shall be taken at Sampling Stations described in Part II, OTHER REQUIREMENTS.

PART I, C. - SCHEDULE OF COMPLIANCE

1. The permittee shall achieve compliance with the Final Effluent Limitations for outfall 1I000004601 as specified in Part I.A. of this NPDES permit as expeditiously as practicable. In any event the permittee shall have completed construction and attained full compliance with the Final Effluent Limitations for Outfall 1I000004601 no later than September 27, 1990.

2. The permittee shall submit written verification to the Ohio EPA Southwest District Office of the completion of step 1. of this schedule of compliance within 14 days after completion of each step.

456

PART II, OTHER REQUIREMENTS

A. Description of the location of the required sampling stations are as follows:

Sampling Station	Description of Location
1I000004001	Manhole 175, final effluent before Great Miami River
1I000004002	Spillway from stormwater retention basin to Paddy's Run
1I000004601	Sewage treatment plant effluent, after disinfection, prior to mixing with other wastestreams discharged via manhole 175 and final outfall (001)
1I000004602	General sump, effluent directed to manhole 175 then discharged via final outfall (001)
1I000004603	Clearwell effluent pumped through 605, manhole 175 and discharged via final outfall (001)
1I000004604	Storm sewer lift station effluent pumped to manhole 175 and discharged via final outfall (001)
1I000004605	Effluent from biodenitrification after settling and/or biological treatment discharged via manhole 175 and final outfall (001)
1I000004606	Stormwater retention basin pump station effluent discharged via manhole 175 and final outfall (001)

B. In the event the permittee's operation shall require the use of cooling water treatment additives, written permission must be obtained from the Ohio Environmental Protection Agency. The permittee shall demonstrate that the use of the additive in the concentrations expected will not be harmful or inimical to aquatic life as determined by acute static bioassays.

C. Permit limitations may be revised in order to meet water quality standards after a stream use determination and waste load allocation are completed and approved. This permit may be modified, or, alternatively, revoked and reissued, to comply with any applicable water quality effluent limitations.

D. 1. The permittee shall submit to the Ohio EPA Southwest District Office quarterly production reports. These reports shall provide the following information:
   a. The number of days the refinery operated during the previous quarter.
   b. The number of days that effluent was discharged through sampling point 1I000004605 the previous quarter.
   c. Production figures for the previous quarter expressed as metric tons per year for uranium processed in the refinery, uranium trioxide produced, uranium metal produced by magnesium reduction, uranium sawn or ground and uranium surface treated.

   2. The permittee shall submit to the Ohio EPA Southwest District Office by October 1 of each year a production prediction report for the next Federal Fiscal Year. This report shall estimate the production for each of the parameters listed under D.1.c above, expected for that Federal Fiscal Year.

146

456

PART II, OTHER REQUIREMENTS (Cont.)

E. On Outfalls where pH is monitored continuously, the permittee shall maintain the pH of such wastewater within the range specified in this permit. Excursions from the range are permitted subject to the following provisions.

1. The total time during which pH values are outside the required range of pH values shall not exceed 7 hours and 26 minutes in any calendar month.

2. No individual excursion from the range of pH values shall exceed 60 minutes.

3. The permittee shall report each month for each monitoring station where pH is monitored continuously the following:

a. the number of pH excursions,

b. the duration of each excursion,

c. the date of each excursion, and

d. the total time of all excursions combined.

F. There shall be no detectable amount of any priority pollutant attributable to cooling tower maintenance chemicals in the cooling tower blowdown wastewater.

G. The permittee shall implement the Best Management Practices (BMP) Plan submitted March, 1988, as approved by Ohio EPA July 10, 1989.

H. The permittee shall amend the BMP plan whenever there is a change in facility design, construction, operation or maintenance which materially affects the facility's potential for discharge of industrial wastes or other wastes into the waters of the State. Proposed changes shall be submitted to Ohio EPA, Southwest District Office for review and approval.