U-004-402.2

556

INITIAL SCREENING OF ALTERNATIVES FOR OPERABLE UNIT 2 TASK 12 REPORT SEPTEMBER 1990

09-28-90

FMPC-0212-4
DOE-ORO
231
REPORT

556 [redacted]

INITIAL SCREENING OF ALTERNATIVES FOR OPERABLE UNIT 2

TASK 12 REPORT

FEED MATERIALS PRODUCTION CENTER
FERNALD, OHIO

REMEDIAL INVESTIGATION and FEASIBILITY STUDY

September 1990

U. S. DEPARTMENT OF ENERGY
OAK RIDGE OPERATIONS OFFICE

DRAFT

556

INITIAL SCREENING OF ALTERNATIVES FOR OPERABLE UNIT 2

TASK 12 REPORT

FEED MATERIALS PRODUCTION CENTER
FERNALD, OHIO

REMEDIAL INVESTIGATION and FEASIBILITY STUDY

DRAFT

September 1990

U. S. DEPARTMENT OF ENERGY
OAK RIDGE OPERATIONS OFFICE

FMPC-0212-4

DRAFT

1A

556

TABLE OF CONTENTS

	Page
List of Tables	xi
List of Figures	xii
Acronyms List	xiv
Distribution List	xvi
Executive Summary	ES-1
1.0 Introduction	1-1
1.1 Background	1-1
1.2 Site History	1-1
1.3 Purpose	1-3
1.4 Organization of Reports	1-5
1.5 Operable Unit 2 Background	1-6
1.5.1 General Site Description	1-6
1.5.2 Operable Unit 2 - Site Descriptions and Histories	1-8
1.5.2.1 Sanitary Landfill	1-8
1.5.2.2 South Lime Sludge Pond	1-10
1.5.2.3 North Lime Sludge Pond	1-10
1.5.2.4 Inactive Fly Ash Disposal Area	1-10
1.5.2.5 Active Fly Ash Pile	1-13
1.5.2.6 Southfield	1-15
2.0 Identification and Screening of Technologies and Process Options	2-1
2.1 Introduction	2-1
2.2 Remedial Action Objectives	2-1
2.2.1 Point of Compliance	2-2
2.2.2 Contaminants of Potential Concern	2-3
2.2.3 Remedial Action Objectives Based on Applicable or Relevant and Appropriate Requirements	2-3
2.2.4 Remedial Action Objectives Based on Risk Criteria	2-3
2.2.5 Summary of Operable Unit 2 Remedial Action Objectives	2-6
2.2.5.1 Direct Radiation	2-6
2.2.5.2 Air	2-6
2.2.5.3 Soils	2-6
2.2.5.4 Sediments and Surface Water	2-6
2.2.5.5 Groundwater	2-9

DRAFT

556

TABLE OF CONTENTS
(continued)

	Page
2.2.5.6 Solid Waste	2-9
2.3 General Response Actions	2-9
2.3.1 No Action	2-9
2.3.2 Institutional Actions	2-17
2.3.3 Containment	2-17
2.3.4 Containment with Treatment	2-17
2.3.5 Removal, Treatment, and Disposal	2-17
2.4 Identification and Screening of Technologies and Process Options	2-17
2.4.1 Identification and Screening of Technologies	2-17
2.4.1.1 Sanitary Landfill	2-36
2.4.1.2 Lime Sludge Ponds	2-37
2.4.1.3 Southfield/Fly Ash Areas	2-38
2.4.2 Evaluation of Process Options	2-38
3.0 Development of Alternatives	3-1
3.1 Description of Alternatives	3-1
3.1.1 Alternative 0: Nonremoval - No Action	3-1
3.1.2 Alternative 1 (2-NA-A): Nonremoval Cap	3-1
3.1.2.1 System Requirements	3-6
3.1.2.2 Size and Configuration	3-10
3.1.2.3 Remediation Time Frame	3-10
3.1.2.4 Spatial Requirements	3-10
3.1.2.5 Packaging/Transportation Requirements	3-11
3.1.2.6 Wastes Generated	3-11
3.1.2.7 Permits Required	3-11
3.1.3 Alternative 2 (2-NA-B): Nonremoval - Slurry Wall, Groundwater Pump and Treatment, and Cap	3-11
3.1.3.1 System Requirements	3-13
3.1.3.2 Size and Configuration	3-19
3.1.3.3 Remediation Time Frame	3-19
3.1.3.4 Spatial Requirements	3-20
3.1.3.5 Packaging/Transportation Requirements	3-20
3.1.3.6 Wastes Generated	3-20
3.1.3.7 Permits Required	3-20

DRAFT

3

556

TABLE OF CONTENTS
(continued)

	Page
3.1.4 Alternative 3 (2-NA-C): Nonremoval - Intercepting Trench, Groundwater Treatment, and Cap	3-20
3.1.4.1 System Requirements	3-20
3.1.4.2 Size and Configuration	3-20
3.1.4.3 Remediation Time Frame	3-26
3.1.4.4 Spatial Requirements	3-26
3.1.4.5 Packaging/Transportation Requirements	3-26
3.1.4.6 Wastes Generated	3-26
3.1.4.7 Permits Required	3-27
3.1.5 Alternative 4 (2-RA-A): Removal - Bulk Packaging and On-Property Disposal	3-27
3.1.5.1 System Requirements	3-27
3.1.5.2 Size and Configuration	3-30
3.1.5.3 Remediation Time Frame	3-35
3.1.5.4 Spatial Requirements	3-35
3.1.5.5 Packaging/Transportation Requirements	3-37
3.1.5.6 Wastes Generated	3-37
3.1.5.7 Permits Required	3-38
3.1.6 Alternative 5 (2-RA-B): Removal - Bulk Packaging and Off-Site Disposal	3-38
3.1.6.1 System Requirements	3-38
3.1.6.2 Size and Configuration	3-40
3.1.6.3 Remediation Time Frame	3-45
3.1.6.4 Spatial Requirements	3-46
3.1.6.5 Packaging/Transportation Requirements	3-46
3.1.6.6 Wastes Generated	3-48
3.1.6.7 Permits Required	3-49
3.1.6.8 Transportation Regulations	3-49
3.2 Summary	3-50
3.2.1 Sanitary Landfill	3-50
3.2.2 Lime Sludge Ponds	3-51
3.2.3 Inactive Fly Ash Disposal Area	3-52
3.2.4 Active Fly Ash Pile	3-53
3.2.5 Southfield	3-54

DRAFT

4

556

TABLE OF CONTENTS
(continued)

	Page
4.0 Alternative Screening Methodology	4-1
4.1 Introduction	4-1
4.2 Alternative Evaluation Process	4-1
4.2.1 Effectiveness Evaluation	4-1
4.2.2 Implementability Evaluation	4-3
4.2.3 Cost Evaluation	4-3
4.2.4 Innovative Technologies	4-4
4.3 Compliance with ARARs	4-4
4.4 Land Disposal Restrictions	4-4
5.0 Screening of Alternatives	5-1
5.1 Sanitary Landfill	5-1
5.1.1 Alternative 0: No Action	5-1
5.1.1.1 Effectiveness	5-1
5.1.1.2 Implementability	5-1
5.1.1.3 Cost	5-1
5.1.2 Alternative 1: Nonremoval - Cap	5-2
5.1.2.1 Effectiveness	5-2
5.1.2.2 Implementability	5-2
5.1.2.3 Cost	5-3
5.1.3 Alternative 2: Nonremoval - Slurry Wall, Groundwater Pump and Treatment, and Cap	5-3
5.1.3.1 Effectiveness	5-3
5.1.3.2 Implementability	5-3
5.1.3.3 Cost	5-3
5.1.4 Alternative 3: Nonremoval - Intercepting Trench, Groundwater Treatment, and Cap	5-3
5.1.4.1 Effectiveness	5-3
5.1.4.2 Implementability	5-4
5.1.4.3 Cost	5-4
5.1.5 Alternative 4: Removal - Bulk Packaging, Perched Groundwater Removal, and On-Property Disposal	5-4
5.1.5.1 Effectiveness	5-4
5.1.5.2 Implementability	5-4
5.1.5.3 Cost	5-5

DRAFT

6

556

TABLE OF CONTENTS
(continued)

	Page
5.1.6 Alternative 5: Removal - Bulk Packaging, Perched Groundwater Removal, and Off-Site Disposal	5-5
5.1.6.1 Effectiveness	5-5
5.1.6.2 Implementability	5-6
5.1.6.3 Cost	5-6
5.2 Lime Sludge Ponds	5-7
5.2.1 Alternative 0: No Action	5-7
5.2.1.1 Effectiveness	5-7
5.2.1.2 Implementability	5-7
5.2.1.3 Cost	5-7
5.2.2 Alternative 1: Nonremoval - Cap	5-7
5.2.2.1 Effectiveness	5-7
5.2.2.2 Implementability	5-7
5.2.2.3 Cost	5-8
5.2.3 Alternative 2: Nonremoval - Slurry Wall, Groundwater Pump and Treatment, and Cap	5-8
5.2.3.1 Effectiveness	5-8
5.2.3.2 Implementability	5-8
5.2.3.3 Cost	5-8
5.2.4 Alternative 3: Nonremoval - Intercepting Trench, Groundwater Treatment, and Cap	5-8
5.2.4.1 Effectiveness	5-8
5.2.4.2 Implementability	5-9
5.2.4.3 Cost	5-9
5.2.5 Alternative 4: Removal - Bulk Packaging, Perched Groundwater Removal, and On-Site Disposal	5-9
5.2.5.1 Effectiveness	5-9
5.2.5.2 Implementability	5-9
5.2.5.3 Cost	5-10
5.2.6 Alternative 5: Removal - Bulk Packaging, Perched Groundwater Removal, and Off-Site Disposal	5-10
5.2.6.1 Effectiveness	5-10
5.2.6.2 Implementability	5-10
5.2.6.3 Cost	5-11

DRAFT

6

TABLE OF CONTENTS
(continued)

	Page
5.3 Inactive Fly Ash Disposal Area	5-11
5.3.1 Alternative 0: No Action	5-11
5.3.1.1 Effectiveness	5-11
5.3.1.2 Implementability	5-11
5.3.1.3 Cost	5-11
5.3.2 Alternative 1: Nonremoval - Cap	5-12
5.3.2.1 Effectiveness	5-12
5.3.2.2 Implementability	5-12
5.3.2.3 Cost	5-12
5.3.3 Alternative 2: Nonremoval - Slurry Wall, Groundwater Pump and Treatment, and Cap	5-12
5.3.3.1 Effectiveness	5-12
5.3.3.2 Implementability	5-12
5.3.3.3 Cost	5-13
5.3.4 Alternative 3: Nonremoval - Intercepting Trench, Groundwater Treatment, and Cap	5-13
5.3.4.1 Effectiveness	5-13
5.3.4.2 Implementability	5-13
5.3.4.3 Cost	5-13
5.3.5 Alternative 4: Removal - Bulk Packaging, Perched Groundwater Removal, and On-Property Disposal	5-13
5.3.5.1 Effectiveness	5-13
5.3.5.2 Implementability	5-14
5.3.5.3 Cost	5-14
5.3.6 Alternative 5: Removal - Bulk Packaging, Perched Groundwater Removal, and Off-Site Disposal	5-14
5.3.6.1 Effectiveness	5-14
5.3.6.2 Implementability	5-15
5.3.6.3 Cost	5-15

DRAFT

556

TABLE OF CONTENTS
(continued)

	Page
5.4 Active Fly Ash Pile	5-15
5.4.1 Alternative 0: No Action	5-15
5.4.1.1 Effectiveness	5-15
5.4.1.2 Implementability	5-16
5.4.1.3 Cost	5-16
5.4.2 Alternative 1: Nonremoval - Cap	5-16
5.4.2.1 Effectiveness	5-16
5.4.2.2 Implementability	5-16
5.4.2.3 Cost	5-16
5.4.3 Alternative 2: Nonremoval - Slurry Wall, Groundwater Pump and Treatment, and Cap	5-17
5.4.3.1 Effectiveness	5-17
5.4.3.2 Implementability	5-17
5.4.3.3 Cost	5-17
5.4.4 Alternative 3: Nonremoval - Intercepting Trench, Groundwater Treatment, and Cap	5-17
5.4.4.1 Effectiveness	5-17
5.4.4.2 Implementability	5-17
5.4.4.3 Cost	5-17
5.4.5 Alternative 4: Removal - Bulk Packaging, Perched Groundwater Removal, and On-Property Disposal	5-18
5.4.5.1 Effectiveness	5-18
5.4.5.2 Implementability	5-18
5.4.5.3 Cost	5-18
5.4.6 Alternative 5: Removal - Bulk Packaging, Perched Groundwater Removal, and Off-Site Disposal	5-19
5.4.6.1 Effectiveness	5-19
5.4.6.2 Implementability	5-19
5.4.6.3 Cost	5-20

DRAFT

8

556

TABLE OF CONTENTS
(continued)

	Page
5.5 Southfield	5-20
5.5.1 Alternative 0: No Action	5-20
5.5.1.1 Effectiveness	5-20
5.5.1.2 Implementability	5-20
5.5.1.3 Cost	5-20
5.5.2 Alternative 1: Nonremoval - Cap	5-20
5.5.2.1 Effectiveness	5-20
5.5.2.2 Implementability	5-21
5.5.2.3 Cost	5-21
5.5.3 Alternative 2: Nonremoval - Slurry Wall, Groundwater Pump and Treatment, and Cap	5-21
5.5.3.1 Effectiveness	5-21
5.5.3.2 Implementability	5-21
5.5.3.3 Cost	5-21
5.5.4 Alternative 3: Nonremoval - Intercepting Trench, Groundwater Treatment, and Cap	5-21
5.5.4.1 Effectiveness	5-21
5.5.4.2 Implementability	5-21
5.5.4.3 Cost	5-22
5.5.5 Alternative 4: Removal - Bulk Packaging, Perched Groundwater Removal, and On-Property Disposal	5-22
5.5.5.1 Effectiveness	5-22
5.5.5.2 Implementability	5-22
5.5.5.3 Cost	5-23
5.5.6 Alternative 5: Removal - Bulk Packaging, Perched Groundwater Removal, and Off-Site Disposal	5-23
5.5.6.1 Effectiveness	5-23
5.5.6.2 Implementability	5-23
5.5.6.3 Cost	5-24
5.6 Additional Costs	5-24
5.7 Screening Summary	5-25

DRAFT

9

556

TABLE OF CONTENTS
(continued)

	Page
6.0 General Summary	6-1
6.1 Sanitary Landfill	6-1
6.1.1 Alternative 1	6-1
6.1.2 Alternative 2	6-1
6.1.3 Alternative 3	6-1
6.1.4 Alternative 4	6-1
6.1.5 Alternative 5	6-1
6.2 Lime Sludge Ponds	6-2
6.2.1 Alternative 1	6-2
6.2.2 Alternative 2	6-2
6.2.3 Alternative 3	6-2
6.2.4 Alternative 4	6-2
6.2.5 Alternative 5	6-2
6.3 Inactive Fly Ash Disposal Area	6-2
6.3.1 Alternative 1	6-2
6.3.2 Alternative 2	6-3
6.3.3 Alternative 3	6-3
6.3.4 Alternative 4	6-3
6.3.5 Alternative 5	6-3
6.4 Active Fly Ash Pile	6-3
6.4.1 Alternative 1	6-3
6.4.2 Alternative 2	6-3
6.4.3 Alternative 3	6-3
6.4.4 Alternative 4	6-4
6.4.5 Alternative 5	6-4
6.5 Southfield	6-4
6.5.1 Alternative 1	6-4
6.5.2 Alternative 2	6-4
6.5.3 Alternative 3	6-4

DRAFT

10

556

TABLE OF CONTENTS
(concluded)

	Page
6.5.4 Alternative 4	6-4
6.5.5 Alternative 5	6-4
6.6 Presentation of Alternatives Recommended for Detailed Analysis	6-5
6.7 Detailed Analysis Preview	6-5
References	R-1
Appendix A: Applicable or Relevant and Appropriate Requirements	A-1
Appendix B: Remedial Action Objectives	B-1

DRAFT

11

556

LIST OF TABLES

Table		Page
ES-1	Remedial Technologies Applicable to Operable Unit	ES-6
ES-2	Alternatives Recommended for Detailed Analysis	ES-9
2-1	Chemicals and Radionuclides of Potential Concern	2-4
2-2	Operable Unit 2 ARAR	2-5
2-3	Groundwater Remedial Action Objectives for Radionuclides	2-10
2-4	Groundwater Remedial Action Objectives for Organic Chemicals	2-11
2-5	Groundwater Remedial Action Objectives for Inorganic Chemicals	2-15
2-6	Freshwater Chronic Water Quality Criteria	2-16
2-7	Remedial Technologies Applicable to Operable Unit 2	2-36
3-1	Development of Alternatives Sanitary Landfill	3-2
3-2	Development of Alternatives Lime Sludge Ponds	3-3
3-3	Development of Alternatives Southfield/Fly Ash Area	3-4
5-1	Summary of Initial Alternative Screening for Operable Unit 2	5-26
5-2	FMPC Feasibility Study Screening Summary Operable Unit 2 Sanitary Landfill	5-36
5-3	FMPC Feasibility Study Screening Summary Operable Unit 2 Lime Sludge Ponds	5-37
5-4	FMPC Feasibility Study Screening Summary Operable Unit 2 Inactive Fly Ash Area	5-38
5-5	FMPC Feasibility Study Screening Summary Operable Unit 2 Active Fly Ash Area	5-39
5-6	FMPC Feasibility Study Screening Summary Operable Unit 2 Southfield	5-40
6-1	Alternatives Recommended for Detailed Analysis	6-5

DRAFT

12

556

LIST OF FIGURES

Figure		Page
ES-1	Remedial Objectives and Associated General Response Actions	ES-3
1-1	Five-Mile Radius Map, FMPC	1-2
1-2	Operable Unit 2 Site Plan	1-4
1-3	Sanitary Landfill	1-9
1-4	North and South Lime Sludge Ponds	1-11
1-5	Inactive Fly Ash Area	1-12
1-6	Active Fly Ash Pile	1-14
1-7	Southfield	1-16
2-1	Remedial Objectives And Associated General Response Actions	2-7
2-2	Initial Screening of Technologies And Process Options-Sanitary Landfill	2-18
2-3	Initial Screening of Technologies And Process Options-Lime Sludge Ponds	2-24
2-4	Initial Screening of Technologies And Process Options-Southfield/Fly Ash Areas	2-30
2-5	Evaluation of Process Options-Sanitary Landfill	2-39
2-6	Evaluation of Process Options-Lime Sludge Ponds	2-45
2-7	Evaluation of Process Options-Southfield/Fly Ash Areas	2-52
3-1	Remedial Action Alternative 1 (2-NA-A)	3-5
3-2	Sanitary Landfill with Cap - Alternative 1	3-7
3-3	Lime Sludge Ponds - Alternative 1	3-8
3-4	Southfield - Alternative 1	3-9
3-5	Remedial Action Alternative 2 (2-NA-B)	3-12
3-6	Sanitary Landfill - Alternative 2	3-14
3-7	Lime Sludge Ponds - Alternative 2	3-15
3-8	Southfield - Alternative 2	3-16
3-9	Geological Cross Section of Southfield	3-18
3-10	Remedial Action Alternative 3 (2-NA-C)	3-21

DRAFT

13

556

LIST OF FIGURES

Figure		Page
3-11	Sanitary Landfill - Alternative 3	3-23
3-12	Lime Sludge Ponds - Alternative 3	3-24
3-13	Southfield - Alternative 3	3-25
3-14	Aboveground Disposal Facility	3-28
3-15	Remedial Action Alternative 4 (2-RA-A)	3-29
3-16	Lime Sludge Stabilization System	3-36
3-17	Remedial Action Alternative 5 (2-RA-B)	3-39
4-1	Relationship of Screening Criteria to the Nine Evaluation Criteria	4-2

DRAFT

14

556

LIST OF ACRONYMS

AEA	Atomic Energy Act
AEC	U.S. Atomic Energy Commission
ALARA	as low as reasonably achievable
ARAR	Applicable or Relevant and Appropriate Requirements
ASI	Advanced Sciences, Inc.
AWQC	Ambient Water Quality Criteria
AWWT	advanced waste water treatment
BDAT	best demonstrated available treatment
CAA	Clean Air Act
CEDE	committed effective dose equivalent
CERCLA	Comprehensive Environmental Response, Compensation and Liability Act
CFR	Code of Federal Regulations
CIS	Characterization Investigation Study
CNS	central nervous system
CPF	cancer potency factor
CWA	Clean Water Act
dcf	dose conversion factor (radiation)
DOE	U.S. Department of Energy
DOT	U.S. Department of Transportation
EE/CA	Engineering Evaluation/Cost Analysis
EPA	U.S. Environmental Protection Agency
EPRI	Electric Power Research Institute
FFCA	Federal Facility Compliance Agreement
FMPC	Feed Materials Production Center
FS	feasibility study
FUSRAP	Formerly Used Sites Remedial Action Program
ICC	Interstate Commerce Commission
IT	International Technology Corporation
LDR	land disposal restrictions
LLRW	low-level radioactive waste
LLW	low-level waste
LSA	low specific activity
MCL	maximum contaminant level

DRAFT

15

556

LIST OF ACRONYMS
(continued)

MCLG	maximum contaminant level goals
MPRSA	Marine Protection Research and Sanctuaries Act
NAAQS	National Ambient Air Quality Standards
NCP	National Contingency Plan
NEPA	National Environmental Policy Act
NLO	National Lead Company of Ohio
NPDES	National Pollutant Discharge Elimination System
NRC	Nuclear Regulatory Commission
NTS	Nevada Test Site
O&M	operations and maintenance
OAC	Ohio Administrative Code
ODH	Ohio Department of Health
ODNR	Ohio Department of Natural Resources
OEPA	Ohio Environmental Protection Agency
OPUC	Ohio Public Utilities Commission
ORC	Ohio Revised Code
OSHA	Occupational Safety and Health Administration
RAO	remedial action objective
RCRA	Resource Conservation and Recovery Act
RfD	reference dose
RI/FS	Remedial Investigation/Feasibility Study
RME	reasonable maximum exposed
SARA	Superfund Amendments and Reauthorization Act
SCO	surface contaminated object
SDWA	Safe Drinking Water Act
SPT	standard penetration test
SSM	shallow soil mixing
TBC	to be considered
TCLP	toxicity characteristic leaching procedure
TSCA	Toxic Substances Control Act
TSD	treatment, storage, and disposal
UMTRCA	Uranium Mill Tailings Radiation Control Act of 1978
USC	U.S. Code
WMCO	Westinghouse Materials Company of Ohio

DRAFT

16

556

DISTRIBUTION LIST

Project Director - John Wood, Fernald
Project Technical Director - John Razor, Fernald
Technical Manager - Bob Galbraith, Fernald
Responsible Operable Unit/Task Managers - Dave Harmer, Knoxville
Mike Higgins, Knoxville
Robin Smith, Pittsburgh
Sam Wolinsky, Fernald
Dan Smith, Oak Ridge
John Frazier, Knoxville
Suzanne Gray, Fernald
Sue Wolinsky, Fernald

Project QA Officer - Dave Ponke, Fernald
Technical QA Officer - Don Mack, Knoxville
Site Project Files - Fernald
IT - Monroeville Project Central Files
IT - Knoxville Project Central Files
ASI - Oak Ridge Project Control Files

DOE COR - Bobby Davis, Fernald
WMCO - Pat Hopper, Fernald
Lee Wan & Associates - M. Neal, Fernald

DOE-HQ - Randi Allen, Washington, DC
Oak Ridge Office

EPA, Region 5 - Catherine McCord, Chicago
OEPA - Graham Mitchell, Dayton

DRAFT

17

EXECUTIVE SUMMARY

The U.S. Atomic Energy Commission (AEC), predecessor to the U.S. Department of Energy (DOE), established a production complex in the early 1950s for processing uranium and its compounds from natural uranium ore concentrates. This complex, known as the Feed Materials Production Center (FMPC), is located on 1050 acres in a rural area approximately 20 miles northwest of downtown Cincinnati, Ohio. The villages of Fernald, Ross, New Haven, and Shandon are all located within a few miles of the plant.

On July 18, 1986, a Federal Facility Compliance Agreement (FFCA) was jointly signed by DOE and the U.S. Environmental Protection Agency (EPA) pertaining to environmental impacts associated with the FMPC. The FFCA was entered into pursuant to Executive Order 12088 (43CFR47707) to ensure compliance with existing environmental statutes and implementing regulations such as Clean Air Act (CAA), the Resource Conservation and Recovery (RCRA), and the Comprehensive Environmental Response, Compensation, and Liability Act (CERCLA). In particular, the FFCA was intended to ensure that environmental impacts associated with past and present activities at the FMPC are thoroughly and adequately investigated so that remedial response actions can be formulated, assessed, and implemented. The 1986 FFCA was amended by a Consent Agreement under Section 120 and 106(a) of CERCLA (Consent Agreement) in order to achieve consistency with the operable unit concept and the current commitments of the RI/FS program without modifying the underlying objectives. The Consent Agreement was signed on April 9, 1990 and became effective on June 29, 1990.

In response to the FFCA and consistent with the modifications agreed to in April 1990, DOE is conducting a Remedial Investigation and Feasibility Study (RI/FS) pursuant to CERCLA, as amended by the Superfund Amendments and Reauthorization Act (SARA). The technical strategy adopted for the RI/FS is to issue distinct RI/FS reports for each of five identified operable units at the FMPC.

One of the operable units identified for the RI/FS is Operable Unit 2; it includes those facilities utilized for the storage/disposal of wastes (fly ash, spent lime, sanitary waste, construction rubble) from FMPC operations. These facilities include the Sanitary Landfill, Lime Sludge Ponds, Inactive Fly Ash Disposal Area, Active Fly Ash Pile, and the Southfield. They are differentiated from other areas and grouped into one operable unit because each area represents a large-volume, solid-waste unit into which small volumes of radiological, chemical, wastes may have been co-disposed.

This report presents the results of the FS screening process, the Initial Screening of Alternatives, for Operable Unit 2. As part of the screening process the estimate of volume (or amount) of waste material has been refined using information gathered during the ongoing RI. This information was also used to further refine the alternatives to distinguish between the long- and short-term effects of three broad criteria: effectiveness, implementability, and cost. Only similar alternatives were compared in the Initial Screening of Alternatives process, thereby preserving the no-action to more-action range of alternatives. Alternatives judged most promising will be carried into Task 13, the Detailed Analysis of Alternatives, which will compare the entire range of alternatives for the purpose of selecting a single preferred alternative.

The development and screening of alternatives process includes developing media-specific remedial action objectives (RAOs). RAOs are medium-specific, operable unit-specific cleanup goals for protecting human health and the environment. The objectives must address the contaminants of concern and the exposure routes and receptors identified in the Operable Unit 2 Baseline Risk Assessment.

In determining RAOs, all significant sources and exposure pathways must be identified to ensure that the RAO for a single source or pathway adequately protects the receptor from the total risk that may be associated with the site. At the FMPC, this concern is addressed by limiting the risk from a single operable unit to twenty-five percent of the total allowable risk. Twenty-five percent was chosen as the allowable risk from a single operable unit because the FMPC RI/FS is being managed as four "source" operable units and a single "environmental media" operable unit. Conservatism is built into this criterion because the same receptor is not likely to be affected by the exposure pathways associated with all operable units. If a single operable unit is identified as contributing multiple significant sources of exposure pathways by which a single constituent may contact a receptor, operable unit-specific RAOs will address this issue.

For Operable Unit 2, RAOs were developed for the following media: direct radiation, air, soils, sediments and surface water, groundwater, and solid waste. RAOs for all relevant media associated with Operable Unit 2 are summarized in Figure ES-1.

General response actions were then developed. The relationship between the RAOs and the general response actions are shown in Figure ES-1.

MEDIUM	REMEDIAL ACTION OBJECTIVE	GENERAL RESPONSE ACTION
1. DIRECT RADIATION	***For Human Health:*** Prevent current and future radiation doses from exceeding 25 mrem/year. ***For Environmental Protection:*** Prevent current and future radiation emissions from causing detectable chronic effects.	No Action Institutional Actions Containment Collection/Treatment Removal/Treatment/Disposal
2. AIR	***For Human Health:*** Prevent current and future above-background airborne radiation doses from exceeding 2.5 mrem, and radon concentrations from exceeding risk levels in excess of 2.5E-05 to 2.5E-07 cancer risk. Prevent current and future airborne chemical concentrations from exceeding risk levels of 2.5E-05 to 2.5E-07 cancer risk and/or a hazard index of 0.25. ***For Environmental Protection:*** Prevent current and future radiation emissions from causing detectable chronic effects.	No Action Institutional Actions Containment Containment/Treatment Removal/Treatment/Disposal
3. SOILS	***For Human Health:*** Prevent direct contact with contaminated soils encompassing Operable Unit 2. Prevent erosion of soil to surface waterways that would result in cancer risks of 2.5E-05 to 2.5E-07, or not cancer hazards resulting in a hazard index of 0.25. Prevent contact with Radium and Thorium to 5 pCi/g in the first 15cm of soil, and 15 pCi/g below. Prevent contact with other nuclides to concentrations resulting in doses greater than 25 mrem. ***For Environmental Protection:*** Prevent erosion of soil that would contribute to surface water concentrations of chemicals in Operable Unit 2 from reaching concentrations in excess of 25 percent of those reported in Table 2-3.	No Action Institutional Actions Containment Containment/Treatment Removal/Treatment/Disposal

602 A FND161A OU2 TK12 OR

FIGURE ES-1. REMEDIAL OBJECTIVES AND ASSOCIATED GENERAL RESPONSE ACTIONS

MEDIUM	REMEDIAL ACTION OBJECTIVE	GENERAL RESPONSE ACTION
4. SEDIMENTS AND SURFACE WATER	***For Human Health:*** Prevent releases of Operable Unit 2 constituents into creek sediments that would result in persons having direct contact with radioactive and nonradioactive constituents in excess of 2.5E-05 to 2.5E-07 cancer risk, and noncarcinogenic constituents resulting in hazard indices greater than 0.25. ***For Environmental Protection:*** Prevent releases of chemicals and radionuclides from Operable Unit 2 from reaching surface water at concentrations in excess of 25 percent of those reported in Table 2-3.	No Action Institutional Actions Containment Containment/Treatment Removal/Treatment/Disposal
5. GROUNDWATER	***For Human Health:*** Prevent releases of radionuclides to the groundwater in excess of concentrations shown on Table 2-3 . Prevent release of inorganic and organic chemicals to the groundwater in excess of concentrations shown in Table 2-3. ***For Environmental Protection:*** None. Biota are not exposed to chemical and radionuclide concentrations in groundwater.	No Action Institutional Actions Containment Containment/Treatment Removal/Treatment/Disposal
6. SOLID WASTES	***For Human Health:*** Prevent direct contact with waste. Prevent circumstances that may provoke leaching of wastes to groundwater. Prevent current and future radiation doses migrating from wastes from exceeding 25 mrem/year. ***For Environmental Protection:*** Prevent direct contact with waste.	No Action Institutional Actions Containment Containment/Treatment Removal/Treatment/Disposal

602 A FND182A OU2 TK12 OR

FIGURE ES-1. REMEDIAL OBJECTIVES AND ASSOCIATED GENERAL RESPONSE ACTIONS (Continued)

General response actions are broad categories of media-specific remediation actions that will satisfy one or more of the RAOs. In the case of Operable Unit 2, these general response actions include no action, institutional action, containment with and without treatment, and removal with treatment and disposal.

The no-action general response action is required for consideration by the NCP and will be carried through as an alternative. The no-action alternative would provide no remediation and would leave the Operable Unit 2 wastes in their present state. It would include the installation of long-term monitoring equipment. The no-action alternative provides a baseline against which the other alternatives can be compared.

Institutional actions refer to actions taken by the responsible authorities to minimize the potential for danger to human health and the environment as a result of any ongoing activities. Examples of institutional actions include monitoring and access control. It should be noted that the no-action alternative may include some institutional actions.

Containment refers to the prevention of any uncontrolled leakage of waste materials, leachate, and/or gases by proper in situ isolation of the waste. Isolation techniques in this category include runon/runoff control, capping, and/or subsurface control.

Containment with treatment is similar to containment as mentioned above, with the exception that the waste would be stabilized in situ before isolation. Several waste stabilization technologies are available for this purpose.

The removal, treatment, and disposal action considers treatment of the waste after removal from its present location. After the treatment process, the waste would be disposed of either on property or off site.

For each general response action, technologies and process options were identified and screened. Table ES-1 lists those technologies applicable to Operable Unit 2.

TABLE ES-1

REMEDIAL TECHNOLOGIES APPLICABLE TO OPERABLE UNIT 2

Monitoring	Hydraulic Removal
Access Control	Sludge Treatment
Run-on/Run-off Control	On Property Disposal
Capping	Off Site Disposal
In situ Stabilization	Physical Treatment
Perched Groundwater Treatment	Thermal Treatment
Mechanical Removal	Volume Reduction
Segregation	

Six potential remedial action alternatives have been developed for the waste disposal units comprising Operable Unit 2 and are listed below. In addition to the no-action alternative, three nonremoval alternatives and two removal alternatives will be evaluated.

- Alternative 0: Nonremoval - No Action
- Alternative 1: Nonremoval - Cap
- Alternative 2: Nonremoval - Slurry Wall, Groundwater Pump and Treatment, and Cap
- Alternative 3: Nonremoval - Intercepting Trench, Groundwater Treatment, and Cap
- Alternative 4: Removal - Bulk Packaging, Perched Groundwater Removal, and On-Property Disposal
- Alternative 5: Removal - Bulk Packaging, Perched Groundwater Removal, and Off-Site Disposal

A brief description of each alternative is provided in the following paragraphs.

Alternative 0: Nonremoval - No Action

This alternative involves no implementation of corrective action for the solid waste units; however, ongoing water quality monitoring would continue to be performed. This alternative is retained throughout the FS as a comparison with other alternatives and as the no-action alternative.

Alternative 1: Nonremoval - Cap

The first nonremoval alternative represents a minimum-action scenario that is intended to isolate the wastes and to minimize the vertical infiltration of rainfall/runoff into and through the solid wastes. This alternative consists of in situ stabilization of waste for the Lime Sludge Ponds, capping, and surface water runoff/run-on control for all Operable Unit 2 solid waste units.

Alternative 2: Nonremoval - Slurry Wall, Groundwater Pump and Treatment, and Cap

The second nonremoval alternative is an extension of Alternative 1 and provides for a more proactive approach to leachate control. This alternative consists of subsurface flow control, treatment of groundwater, stabilization of waste for the Lime Sludge Ponds, capping, and surface water runoff/run-on control. Subsurface flow control for this alternative consists of the placement of a hanging slurry wall that can extend partially or fully around the solid waste units. A wellpoint system would surround the Sanitary Landfill and Lime Sludge Ponds while extending only partially around the Fly Ash/Southfield areas. Wells would then be placed in the glacial overburden to extract perched water contained in sand lenses that may be present in the vicinity of Operable Unit 2 solid waste sites.

Alternative 3: Nonremoval - Intercepting Trench, Groundwater Treatment, and Cap

This nonremoval alternative for Operable Unit 2 is comprised of an interceptor trench for groundwater collection and control, associated treatment of any groundwater removed, and Operable Unit 2 site closure including capping and runoff/run-on control measures. A comparison of this alternative with Alternative 2 indicates that they are identical, except that releases to the underlying aquifer would be controlled through a passive groundwater collection trench rather than through the use of a slurry wall and pumping wells. The option of stabilizing the lime sludge wastes prior to Operable Unit 2 site closure is included as part of the alternative.

Alternative 4: Removal - Bulk Packaging, Perched Groundwater Removal, and On-Property Disposal

This alternative incorporates removal and on-property disposal of the solid waste materials and the removal of perched groundwater contained in the sand lens of Operable Unit 2 waste sites. For the Lime Sludge Ponds, this alternative involves the mechanical or hydraulic removal of sludge from the North and South Lime Sludge Ponds, sludge treatment/bulk packaging, and placement in an on-property disposal facility. This alternative also involves the mechanical removal and on-property disposal of solid wastes from the Sanitary Landfill and Fly Ash/Southfield areas. No records exist to confirm that hazardous wastes were placed in the Sanitary Landfill, but data indicates that the Sanitary Landfill contains the highest diversity of organic chemicals of all the Operable Unit 2 waste units. Therefore, the proposed applicable or relevant and appropriate requirements (ARARs) for Operable Unit 2 consider RCRA Subtitle C for the Sanitary Landfill. It should be noted that the detected concentrations of the organics in the Sanitary Landfill are low, and the attention to RCRA is given only in the event that higher concentrations of organics are encountered. Therefore, this removal alternative is structured to accommodate this possibility. The removal of the waste in

the Sanitary Landfill would include waste segregation, sampling (compatibility testing), and treatment of mixed and hazardous wastes. The option of packaging certain types of waste prior to disposal would be available if it were deemed necessary for public health and environmental protection.

Alternative 5: Removal - Bulk Packaging, Perched Groundwater Removal, and Off-Site Disposal
The second removal alternative is similar to Alternative 4 except that the removed waste material would be transported to an approved off-site disposal location. One concomitant change in this alternative is that the removed waste would require some type of packaging prior to off -property transport. If the Sanitary Landfill were found to contain hazardous waste, the wastes would be either treated on property, packaged and shipped off site to a permitted disposal facility or packaged and shipped off site to a permitted treatment, storage, and disposal (TSD) facility. The low-level radioactive wastes would not require treatment prior to shipping and would be shipped to an approved or licensed off-site facility. Mixed waste would require treatment to reduce the concentration of hazardous constituents prior to packaging and off-site disposal. A temporary storage structure would be required at the FMPC to support the off-site transportation effort for the low-level radioactive wastes and hazardous waste. The transport process options selected for further consideration include transport by rail, truck, or rail with a truck transfer station at the disposal site. Any waste acceptance criteria the disposal facility imposes (e.g., no free liquids, no respirable particulate fines) would be satisfied prior to shipping.

These six alternatives were then subjected to a screening to ascertain if any could be eliminated from further consideration prior to the Task 13, the Detailed Analysis of Alternatives. Each alternative was examined for each of the solid waste units. The no-action alternative was retained for each waste unit to achieve compliance with the requirements of CERCLA. The alternatives were evaluated against three general criteria: effectiveness, implementability, and cost.

The components of the effectiveness criterion include short-term and long-term public health protection; short-term and long-term environmental protection; and the degree to which toxicity, mobility, or volume of the contaminants in the waste disposal areas will be reduced.

Factors of implementability considered for the screening evaluation include technical feasibility and administrative feasibility. Technical feasibility refers to the ability to construct, reliably operate, and meet technology-specific regulations for process options until a remedial action is complete.

Administrative feasibility refers to the ability to obtain approvals from other offices and agencies and to the requirements for, and availability of, specific equipment and technical specialists.

The total cost of an alternative is also considered. This factor includes direct capital costs and any post-removal operations and maintenance costs.

For each component of each criterion, the alternatives were assigned numerical values of one through five. A ranking of "one" indicates a particular alternative is least favorable for a particular criterion (i.e., short-term environmental protection or constructability), while "five" represents an alternative that is most favorable for a particular criterion relative to other alternatives.

Table ES-2 shows the alternatives that are recommended for detailed analyses as a result of initial screening.

TABLE ES-2
ALTERNATIVES RECOMMENDED FOR DETAILED ANALYSIS

Waste Unit	Alt. 0	Alt. 1	Alt. 2	Alt. 3	Alt. 4	Alt. 5
Sanitary Landfill	X	X			X	X
Lime Sludge Ponds	X	X			X	X
Inactive Fly Ash Disposal Area	X	X			X	X
Active Fly Ash Pile	X	X			X	X
Southfield Area	X	X			X	X

Alternative 0 is being retained throughout the FS as a baseline for comparison with other alternatives. Alternatives 1, 4, and 5 were retained for all of the Operable Unit 2 waste units and Alternatives 2 and 3 were eliminated from further consideration.

Of the nonremoval alternatives, Alternative 1 received the highest composite ranking due primarily to its implementability for each waste unit. Alternatives 2 and 3 received lower composite rankings because Alternative 1 is considered to be as effective, easier, and less expensive to implement. Therefore, Alternatives 2 and 3 are eliminated from further consideration. Of the two removal alternatives, Alternative 4 received the higher composite ranking due to its favorability of short-term

effectiveness and its potential for agency approval. Alternative 4 will be retained for consideration. Alternative 5 will also be retained for detailed analysis due to uncertainty regarding national policy decisions related to disposal of DOE wastes.

The screened alternatives will be evaluated further in the Detailed Analysis of Alternatives, which will focus on the risk reduction each alternative provides relative to the baseline condition. Alternative 1 will focus on the effectiveness of capping with respect to the evaluation criteria. Alternative 4 will focus on whether the incremental reduction in risk is justified by the additional incurred costs of implementing this alternative. Alternative 5 will focus on the feasibility of using off-site locations for disposal and the relative risks involved in the implementation of off-site disposal.

DRAFT

1.0

1.0 INTRODUCTION

1.1 BACKGROUND

On July 18, 1986, a Federal Facility Compliance Agreement (FFCA) was jointly signed by the U.S. Department of Energy (DOE) and U.S. Environmental Protection Agency (EPA) pertaining to environmental impacts associated with the Feed Material Production Center (FMPC) near Fernald, Ohio. The FFCA was entered into pursuant to Executive Order 12088 (43CFR47707) to ensure compliance with existing environmental statutes and implementing such regulations as the Clean Air Act (CAA); the Resource Conservation and Recovery (RCRA); and the Comprehensive Environmental Response, Compensation, and Liability Act (CERCLA). In particular, the FFCA was intended to ensure that environmental impacts associated with past and present activities at the FMPC are thoroughly and adequately investigated so that remedial response actions can be formulated, assessed, and implemented. The 1986 FFCA was amended by a Consent Agreement under Section 120 and 106(a) of CERCLA (Consent Agreement) in order to achieve consistency with the operable unit concept and the current commitments of the Remedial Investigation/ Feasibility Study (RI/FS) program without modifying the underlying objectives. The Consent Agreement was signed on April 9, 1990 and became effective on June 29, 1990.

In response to the FFCA and consistent with the modifications agreed to in April 1990, DOE is conducting an RI/FS pursuant to CERCLA, as amended by the Superfund Amendments and Reauthorization Act (SARA). The technical strategy adopted for the RI/FS is to issue distinct RI/FS reports for each of five identified operable units at the FMPC.

The FMPC is located in southwestern Ohio approximately 20 miles northwest of downtown Cincinnati. The FMPC comprises 1050 acres, with approximately 850 acres in northern Hamilton County and approximately 200 acres in southern Butler County (Figure 1-1). The villages of Fernald, New Baltimore, Ross, New Haven, and Shandon are located within a few miles of the plant.

1.2 SITE HISTORY

The FMPC was constructed in 1951 to produce high-purity uranium metals (for use at other DOE facilities) in several physical forms, using various chemical and metallurgical processes. A small amount of thorium processing was also performed from 1954 to 1975 in the Metals Fabrication Plant, the Recovery Plant, the Special Projects Plant, and the Pilot Plant. Small quantities of

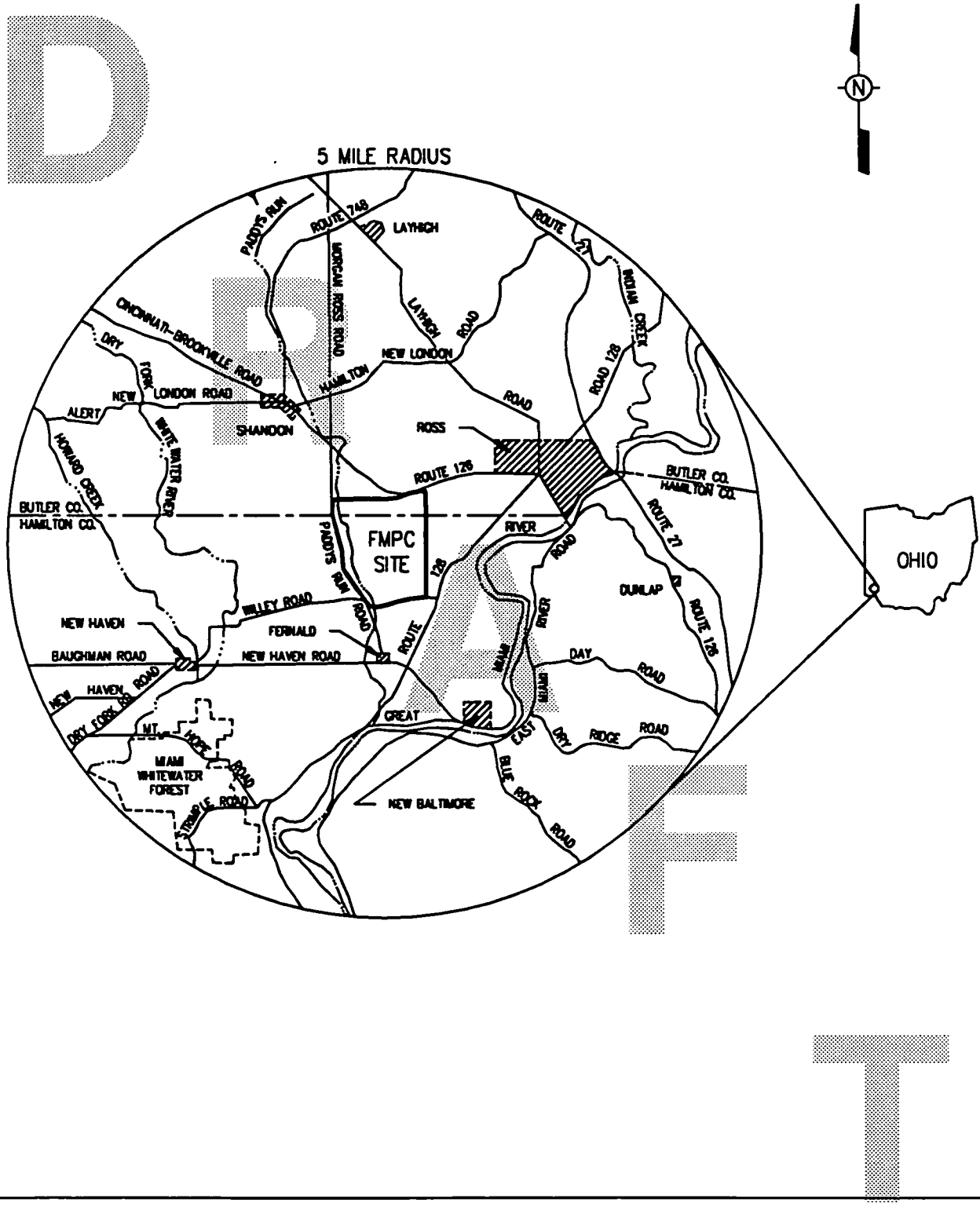

FIGURE 1-1. FIVE-MILE RADIUS MAP, FEED MATERIALS PRODUCTION CENTER

602_A_FN0151_OU2_TK12_OR

fission products (e.g., strontium-90 [Sr-90], cesium-137 [Cs-137], and technetium-99 [Tc-99]) and transuranics may be present in some plant effluents and wastes as a consequence of the processing of recycled fuel materials. Past activities have also produced a variety of wastes including general scrap and refuse, sanitary waste, contaminated and noncontaminated metal scrap, waste oils, asbestos, and fly ash. The wastes are currently stored at the FMPC. The FMPC also serves as the thorium repository for DOE.

The Sanitary Landfill, North and South Lime Sludge Ponds, Active Fly Ash Pile, Inactive Fly Ash Disposal Area, and the Southfield are the waste disposal areas that comprise Operable Unit 2. They are differentiated from other areas and grouped into one operable unit because each area represents a large-volume, solid-waste unit into which small volumes of radiological or chemical wastes may have been co-disposed. Figure 1-2 presents the general locations of these units within the FMPC.

1.3 PURPOSE

The RI/FS for the FMPC was initially designed to address the entire site and to focus on various environmental media that could be affected by past and present operations at the site.

The work plan prepared for the site-wide RI/FS provided the overall technical approach, identified a number of investigative areas, developed objectives for each of the specified investigations, and established overall objectives for the evaluation of the data that were collected during RI activities. The work plan also involved the preparation of a number of detailed plans to establish specific procedures to be followed in the completion of the RI/FS for the FMPC. These plans included the following:

- Sampling Plan
- Health and Safety Plan
- Community Relations Plan
- Data Management Plan
- Quality Assurance Project Plan

The sampling plan contained objectives, sampling locations, and sampling procedures for specific RI/FS activities including the following:

- Radiation measurement
- Surface soils
- Groundwater
- Subsurface soils
- Surface water and sediment
- Biological resources

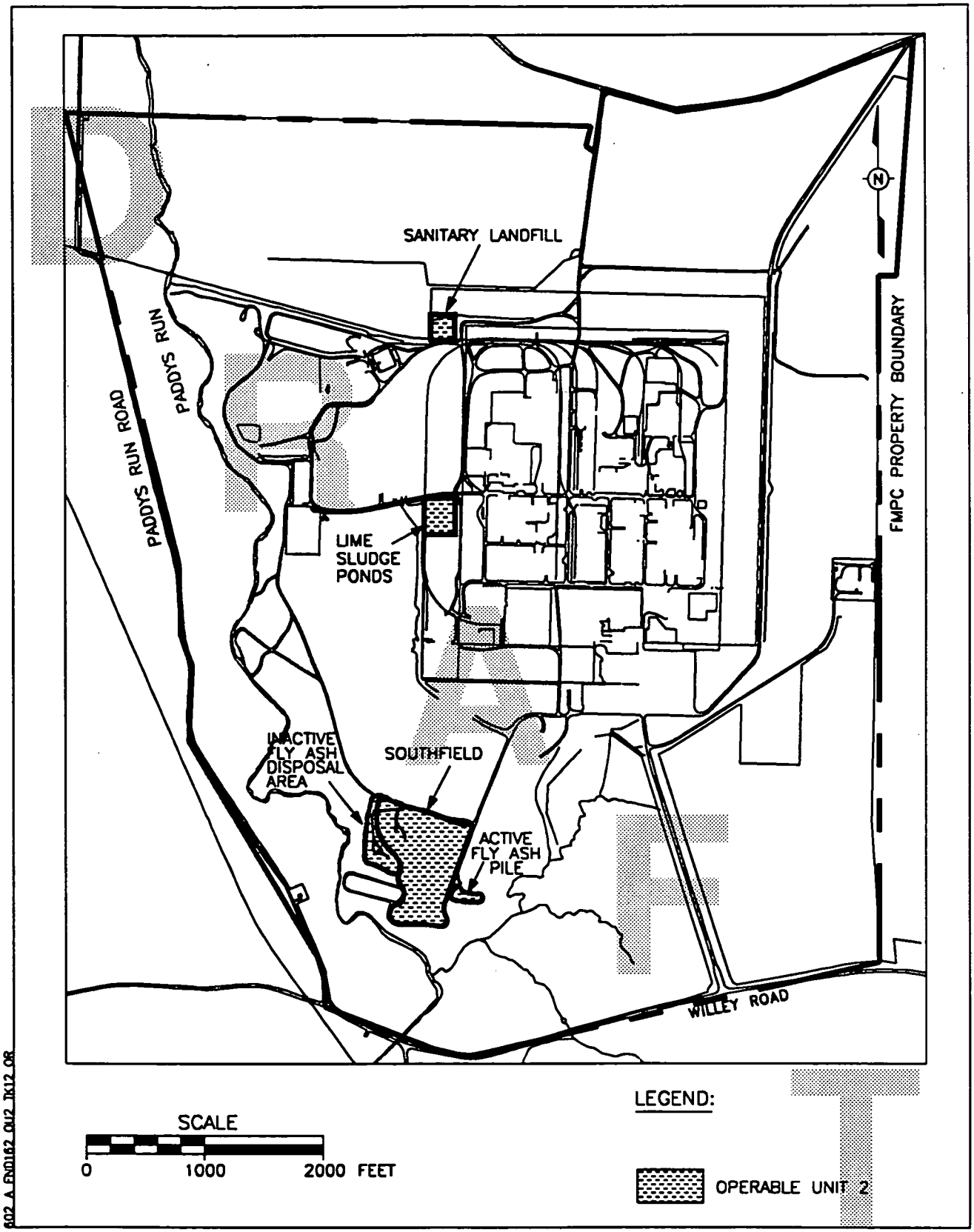

FIGURE 1–2. OPERABLE UNIT 2 SITE PLAN

The work plan identified 27 units of the FMPC to be investigated in the RI/FS; several modifications to the list eventually increased this total to 39 units. In the course of the investigation it became apparent that, for technical and program management purposes, these 39 units needed to be categorized and grouped together to segregate them into distinct groups of similar wastes or environmental media. The concept of operable units was introduced into the program so that remedial technologies can be applied to each group of waste or environmental media and separate schedules for each operable unit can be accomodated. This approach allows the remedial action process to proceed to completion for the most well-defined or problematical units, while data collection and analysis continue for other operable units. The broad objective of the RI/FS is to gather sufficient information to support an informed risk-management decision regarding remedial response.

There are five operable units:

- Operable Unit 1 - Waste Storage Area
- Operable Unit 2 - Solid Waste Units
- Operable Unit 3 - Production Area and Suspect Areas
- Operable Unit 4 - K-65 Silos and Metal Oxide Silos
- Operable Unit 5 - Environmental Media

This report presents the results of the FS screening process, the Initial Screening of Alternatives, for Operable Unit 2. As part of the screening process (explained more fully in Section 4.0), the estimate of volume (or amount) of waste material has been refined using information gathered during the ongoing RI. This information was also used to further refine the alternatives to distinguish between the long- and short-term effects of three broad criteria: effectiveness, implementability, and cost. Only similar alternatives were compared in the Initial Screening of Alternatives process, thereby preserving the no-action to more-action range of alternatives. Alternatives judged most promising will be carried into Task 13, the Detailed Analysis of Alternatives, which will compare the entire range of alternatives for the purpose of selecting a single preferred alternative.

1.4 ORGANIZATION OF REPORTS

The remainder of the report is divided into Sections 2 through 6 and an appendix. Section 2 provides a discussion of the development and screening of technologies and process options used to assemble the remedial action alternatives for Operable Unit 2. Section 3 provides a summary of the development of alternatives from the general response actions. Section 4 discusses the

methodology used to screen the alternatives. In order to reduce complexities introduced into the screening process, duplicate technologies within each alternative are eliminated when possible. Section 5 presents and summarizes the screening of alternatives. Section 6 discusses the alternatives selected for detailed analysis. Appendix A contains potential Applicable or Relevant and Appropriate Requirements (ARARs). Appendix B contains the remedial action objective for the contaminants of concern for Operable Unit 2.

1.5 OPERABLE UNIT 2 BACKGROUND

The following subsections present Operable Unit 2 site descriptions and histories, and information from previous Operable Unit 2 investigations. The FS assumes that all waste disposal within any Operable Unit 2 waste-disposal site will cease prior to any remediation activity.

1.5.1 General Site Description

To meet the needs of the government, the U.S. Atomic Energy Commission (AEC), predecessor to DOE, established the FMPC to process uranium and its compounds from natural uranium ore concentrates. This integrated-production complex began operations in conformance with AEC orders in the early 1950s. In 1951 the National Lead Company of Ohio (NLO) entered into contract with AEC and became operations and maintenance (O&M) contractor. NLO's relationship with AEC (and then DOE) continued until January 1, 1986. At that time Westinghouse Materials Company of Ohio (WMCO), a wholly-owned subsidiary of Westinghouse Electric Corporation, assumed management responsibilities for FMPC operations and facilities (for a minimum five-year period).

A variety of chemical and metallurgical processes are used at the FMPC for the manufacture of uranium products. During manufacture, high-quality uranium compounds are introduced into FMPC processes at several points. Impure feed materials are dissolved in nitric acid and the uranium is removed through solvent extraction to yield a solution of uranyl nitrate. Evaporation and heat convert the nitrate solution to uranium trioxide (UO_3) powder. This compound is reduced with hydrogen to uranium dioxide (UO_2) and then converted to uranium tetrafluoride (UF_4) by reaction with anhydrous hydrogen fluoride. Uranium metal is produced by reacting UF_4 and magnesium metal in a refractory-lined vessel. This primary uranium metal is then remelted with scrap uranium metal to yield a purified uranium ingot. Various other uranium metal-working processes also exist.

From 1953 through 1955, the FMPC refinery processed pitchblende ore from the Belgian Congo. Pitchblende ore contains all daughter products of the uranium decay chains and is particularly high in radium content. No chemical separation or purification was performed on the ore prior to arrival at the FMPC. Beginning in 1956, the refinery feedstock consisted of uranium concentrates (yellowcake) from Canada and the United States. Processing of Canadian concentrates was discontinued after 1960. The Canadian yellowcake used at the FMPC contained higher levels of thorium than the yellowcake from American sources.

Liquid and solid wastes were generated and continue to be generated by various operations at the FMPC. Prior to 1985, solid and slurried wastes from FMPC processes were deposited (disposed of) in the on-property waste storage area. This area, which is located west of the production facilities, includes six storage pits for low-level radioactive waste; two earthen-bermed concrete silos containing K-65 high-specific activity, low-level radium-bearing residues (that are a result of the pitchblende refining process); one concrete silo containing metal oxides; two lime sludge ponds; and a sanitary landfill.

Two fly ash piles are located approximately 3000 feet south-southeast of the waste storage area. One pile remains active for the disposal of fly ash from the FMPC coal-fired boiler plant. An area between and adjacent to the fly ash piles, known as the Southfield, is believed to have been the disposal site for construction debris and possibly other types of solid wastes from FMPC operations.

Surface water runoff from the waste storage area, Active Fly Ash Pile, Inactive Fly Ash Disposal Area, and other affected areas within the western portion of the FMPC enters Paddys Run, a tributary of the Great Miami River. Paddys Run originates just north of the FMPC and flows in a south-southeast direction along the western edge of the site. During most of the year, Paddys Run is a dry streambed with occasional rainfall-induced flows.

Leachate from these same areas has the potential to migrate vertically, through a till layer (known as the glacial overburden) that varies in thickness, to the regionally important Great Miami Aquifer that underlies the site. This aquifer serves as a principal source of domestic, municipal, and industrial water throughout the region. A portion of the flow in Paddys Run is also known to enter this aquifer from leakage through the stream bottom. The leakage occurs over the length of Paddys Run, beginning at a point west of the Waste Storage Area and extending to the Great Miami River.

Liquid waste effluent generated from FMPC process operations is sent to a general plant sump for treatment and analysis. The effluent is then released via Manhole 175 to the Great Miami River through the main effluent line, which is a permitted discharge for wastewater from the FMPC. The discharge is regulated by a National Pollutant Discharge Elimination System (NPDES) permit and DOE orders; compliance monitoring is performed at Manhole 175 before the effluent leaves the on-property boundary.

1.5.2 Operable Unit 2 - Site Descriptions and Histories

1.5.2.1 Sanitary Landfill

The FMPC Sanitary Landfill is located in the northeast corner of what is termed the Waste Storage Area. The facility is organized into 17 individual cells; 5 cells are filled to capacity and no longer in service, and 12 cells will be constructed pending issuance of a permit by the Ohio Environmental Protection Agency (OEPA).

A soil cover has been placed over the five cells that are filled to capacity, forming the topographic setting shown in Figure 1-3. Sanitary wastes and general refuse are currently collected for shipment and disposal at approved off-site locations.

Previous estimates (Weston 1988) of actual waste volume indicated that the landfill contained approximately 10,000 cubic yards of waste. A review of historic site photos (EPA 1988a) indicates that activity at the Sanitary Landfill occurred as early as 1954; borehole logs (Weston 1988) indicate that waste material also was deposited in an area adjacent to the five landfill cells. The actual waste volume is now believed to be approximately 16,000 to 18,000 cubic yards. The FS will focus on the five cells that have been filled with waste (an approximate one-acre portion of the landfill) (Figure 1-3).

The Sanitary Landfill was used for the disposal of cafeteria waste, rubbish, and other types of wastes from nonprocess areas. Materials reportedly accepted include nonburnable and nonradioactive sanitary wastes generated on property, nonradioactive construction-related rubble, and double-bagged and bulk quantities of nonradioactive asbestos. Construction rubble placed in the landfill and the soil used to cover exposed wastes may have been contaminated with radionuclides. When filled to capacity, the five existing cells were covered with soil. Use of the landfill was temporarily halted in early 1986.

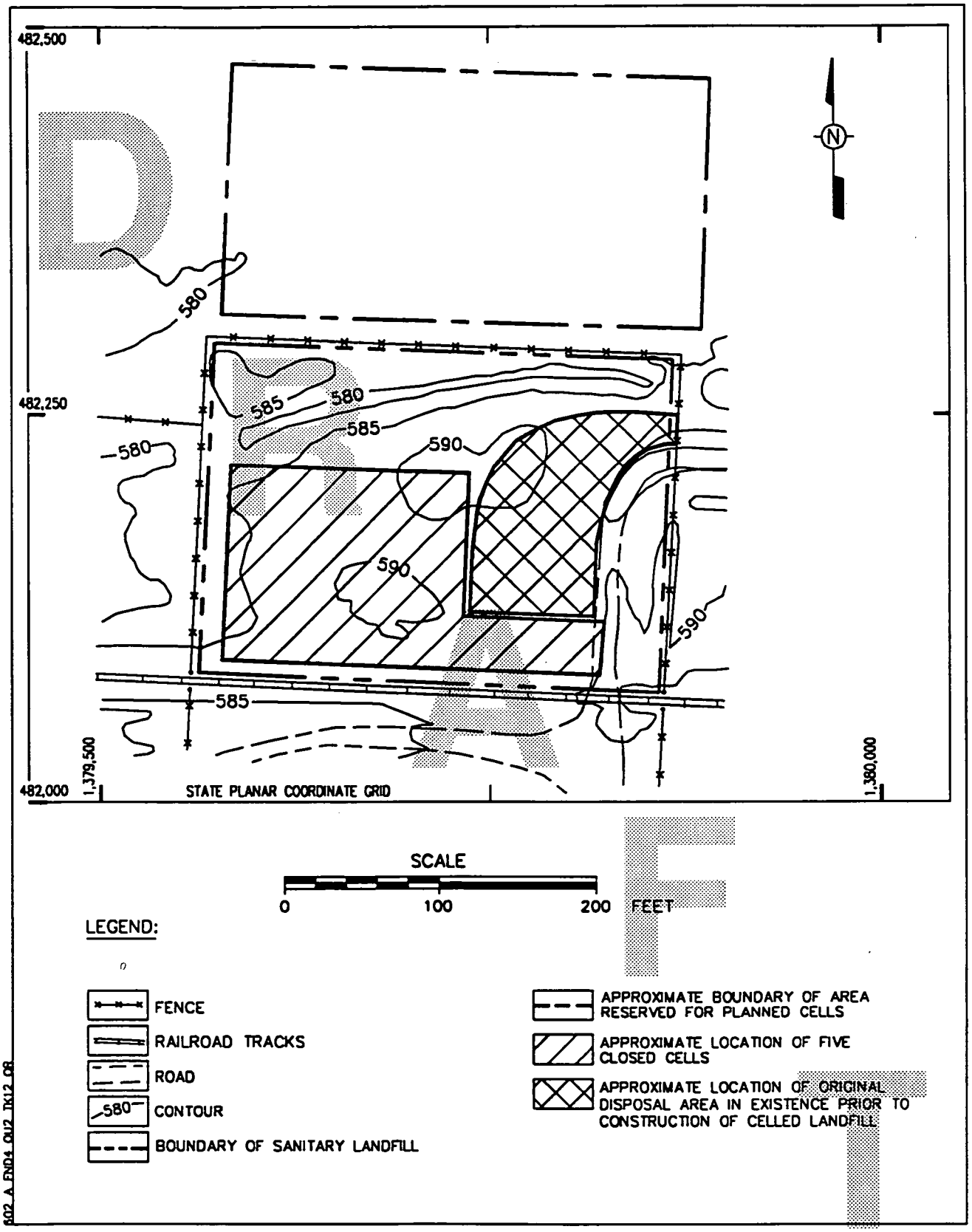

FIGURE 1-3. SANITARY LANDFILL

1.5.2.2. South Lime Sludge Pond

The South Lime Sludge Pond is an unlined pond in the southeast corner of the waste storage area, as depicted in Figure 1-4; its approximate surface dimensions are 150 feet by 300 feet, (including the berms), and it is now overgrown with grass and shrubs. The depth had been previously reported as 6 to 8 feet, and the volume had been estimated at 5000 cubic yards (ASI/IT 1988). Borehole log information (Weston 1988) however, indicates the depth of the South Pond to be approximately 11.5 feet. Using this information, the sludge volume has been revised to be approximately 11,500 cubic yards (ASI 1990).

Spent lime sludges from FMPC water treatment plant operations (lime-alum sludges and boiler plant blowdown) were pumped to this pond and allowed to settle. This pond has been inactive for a number of years; however, the pond was reactivated recently by WMCO and currently receives spent lime sludge.

1.5.2.3 North Lime Sludge Pond

The North Lime Sludge Pond is an unlined pond that has received spent lime sludge until recently (Figure 1-4). It is approximately 150 feet by 300 feet in size, (including the berms) is approximately 90 percent full, and has a previously-reported lime-sludge depth of six to eight feet (ASI/IT 1988). This pond is partially covered with water (estimated to be a maximum of 150,000 gallons) that ranges from one to seven feet in depth. The actual volume of water can vary, depending on plant operations and precipitation. The height of berm surrounding North Pond is lower than the height of the South Ponds, and the depth of lime sludge in the North Pond ranges from five to seven feet (Weston 1988). Therefore, the volume of lime sludge contained in the North Pond is estimated to be 5,000 cubic yards.

As with the South Pond, spent lime sludges from the FMPC water treatment plant operations (lime-alum sludges and boiler plant blowdown) are pumped to this pond and allowed to settle. The total volume of lime sludge in both ponds is estimated to be 16,500 cubic yards.

1.5.2.4. Inactive Fly Ash Disposal Area

This waste unit, with little soil or vegetation cover, is located approximately 2000 feet southwest of the production area and is depicted in Figure 1-5. Based on a review of historic photos (EPA 1988b) and borehole logs (Weston 1988), the following observations were made:

- The northern portion of the Inactive Fly Ash Disposal Area is on top of an old drainage leading to Paddys Run. Borehole Number 10 is located in the

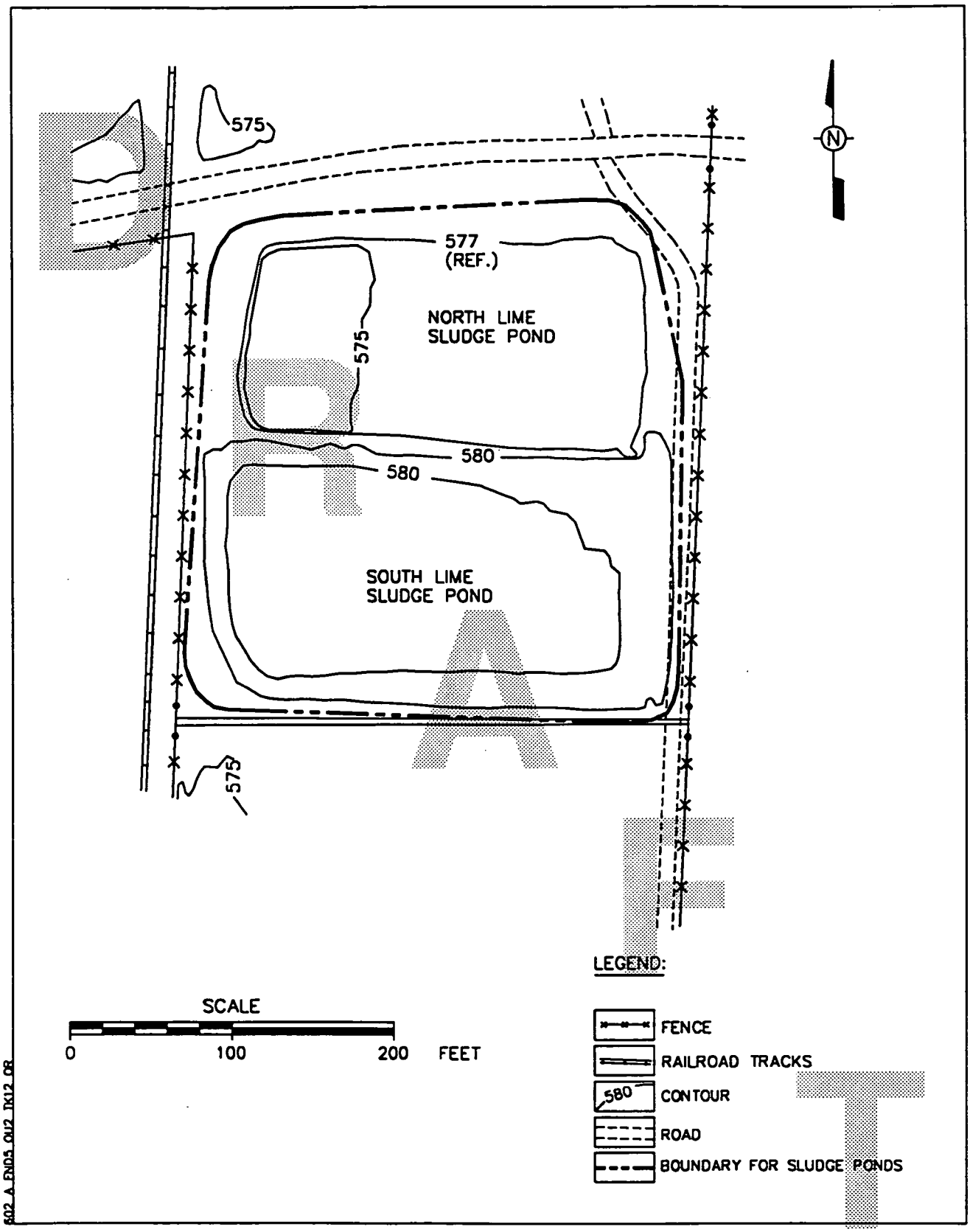

FIGURE 1-4. NORTH AND SOUTH LIME SLUDGE PONDS

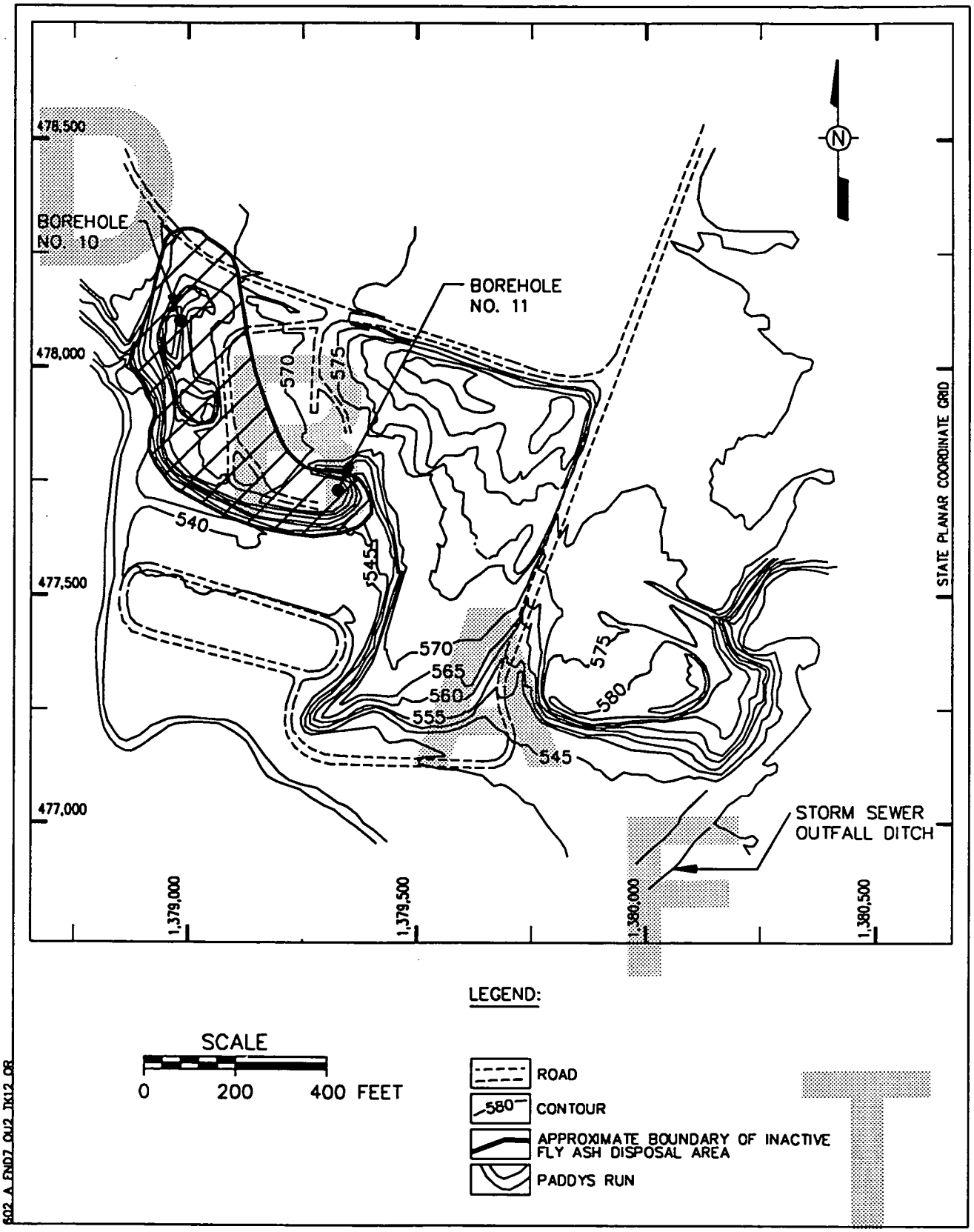

FIGURE 1-5. INACTIVE FLY ASH DISPOSAL AREA

upper portion of this area and was bored to a depth of approximately 26 feet before reaching undisturbed soil. Approximately one foot of clay was found in this undisturbed interval, with sand located under the clay. •The west-southwest portion of the Inactive Fly Ash Disposal Area is on a slope just north of the running track/firing range. Borehole Number 11 is located in this area and was bored to a depth of 34 feet before reaching undisturbed soil. The borehole description and historical photos seem to indicate that layers of soil and fly ash were deposited in this area.

- Based on information provided by WMCO, 2500 tons per year of fly ash were generated. Assuming a 38-year operating period and a density of 80 pounds per cubic foot, a total of 88,000 cubic yards of fly ash is estimated to be present in the active and inactive fly ash areas. This is the quantity assumed to exist for Operable Unit 2; however, it is an overestimation of the actual volume because some fly ash was disposed of in the Burn Pit and Pit 3, part of Operable Unit 1 (Weston 1988). This information is currently the most reliable estimate available of the total volume of fly ash, under the stated assumptions.

- Previous reports (ASI/IT, 1988) have estimated the volume of fly ash in the Inactive Fly Ash Disposal Area to be approximately 50,000 cubic yards. Historical photographs indicate that disposal activity ceased in the Inactive Fly Ash Disposal Area between 1964 and 1968. The 1988 estimate of 50,000 cubic yards for the Inactive Fly Ash Disposal Area is reasonable.

- Elevated levels of uranium were found during sampling activity performed in the Characterization Investigation Study (Weston 1987a), so it is suspected that waste oils containing uranium were sprayed on the pile as a dust suppressant. Approximately 1000 kg of uranium is estimated to have been present in the oils used as a dust suppressant.

- Building rubble such as concrete, gravel, asphalt, masonry, and steel rebar was also discarded at this site.

1.5.2.5 Active Fly Ash Pile

This waste unit is easily distinguishable because it is presently uncovered and located just east of the running track/Southfield area, on the opposite side of the south construction road (Figure 1-6). The storm sewer outfall ditch is located to the east of the Active Fly Ash Pile. A previous estimate of the volume of the fly ash deposited in the active pile is 33,000 cubic yards (ASI/IT 1988); however, the previously-cited estimate of total fly ash produced at the FMPC has caused the estimated volume in this unit to be raised to 38,000 cubic yards.

In past and current operations, fly ash from the coal-fired boiler plant is loaded into dump trucks and transported to the fly ash disposal site. In the past, contaminated waste oils were reportedly sprayed onto the fly ash pile on a periodic basis as a means of dust control (DOE 1989). The

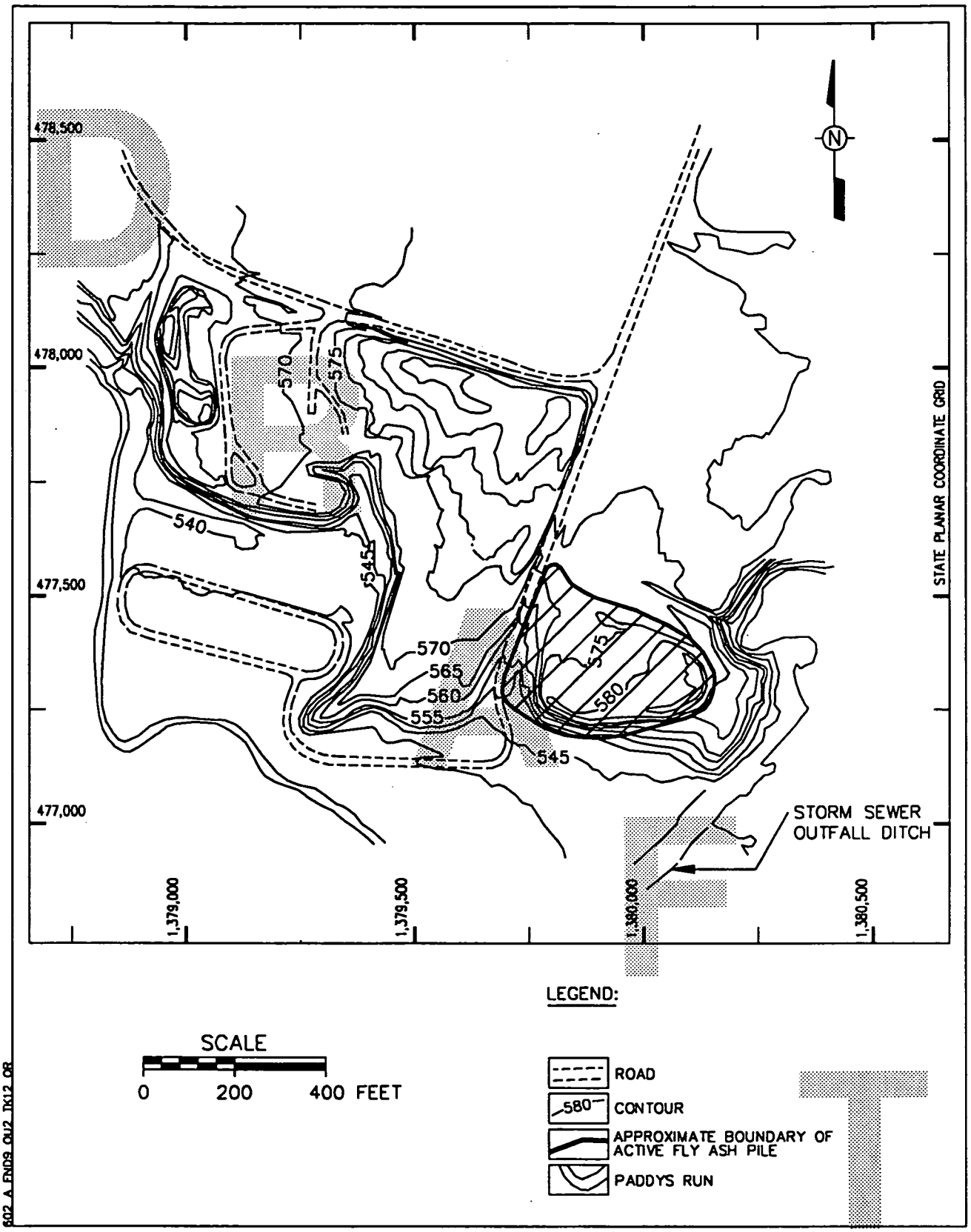

FIGURE 1-6. ACTIVE FLY ASH PILE

elevated levels of radiological contaminants found in surface samples provide evidence of these dust control activities, (that of spraying contaminated oils on the fly ash piles).

1.5.2.6 Southfield

Previous reports (ASI/IT 1988, ASI/IT 1989b, Weston 1987b) have not defined the volume or boundaries of the Southfield. A review of the previously-mentioned historic photos and borehole logs were used to estimate the boundaries and then the volume and area. For example, photographs from 1954 and 1957 indicate where fill activity occurred. The boundary of the Southfield assumed for the FS, representing a surface area of approximately 11 acres with a volume of 125,000 cubic yards (ASI 1990), is shown in Figure 1-7. This quantity estimation is supported by the borehole logs (Weston 1988) and trenches excavated during the RI (ASI/IT 1989b).

The Southfield was reportedly used as a burial site for construction rubble that may have contained low levels of radioactivity; this includes debris from the razing of the old administration building.

DRAFT

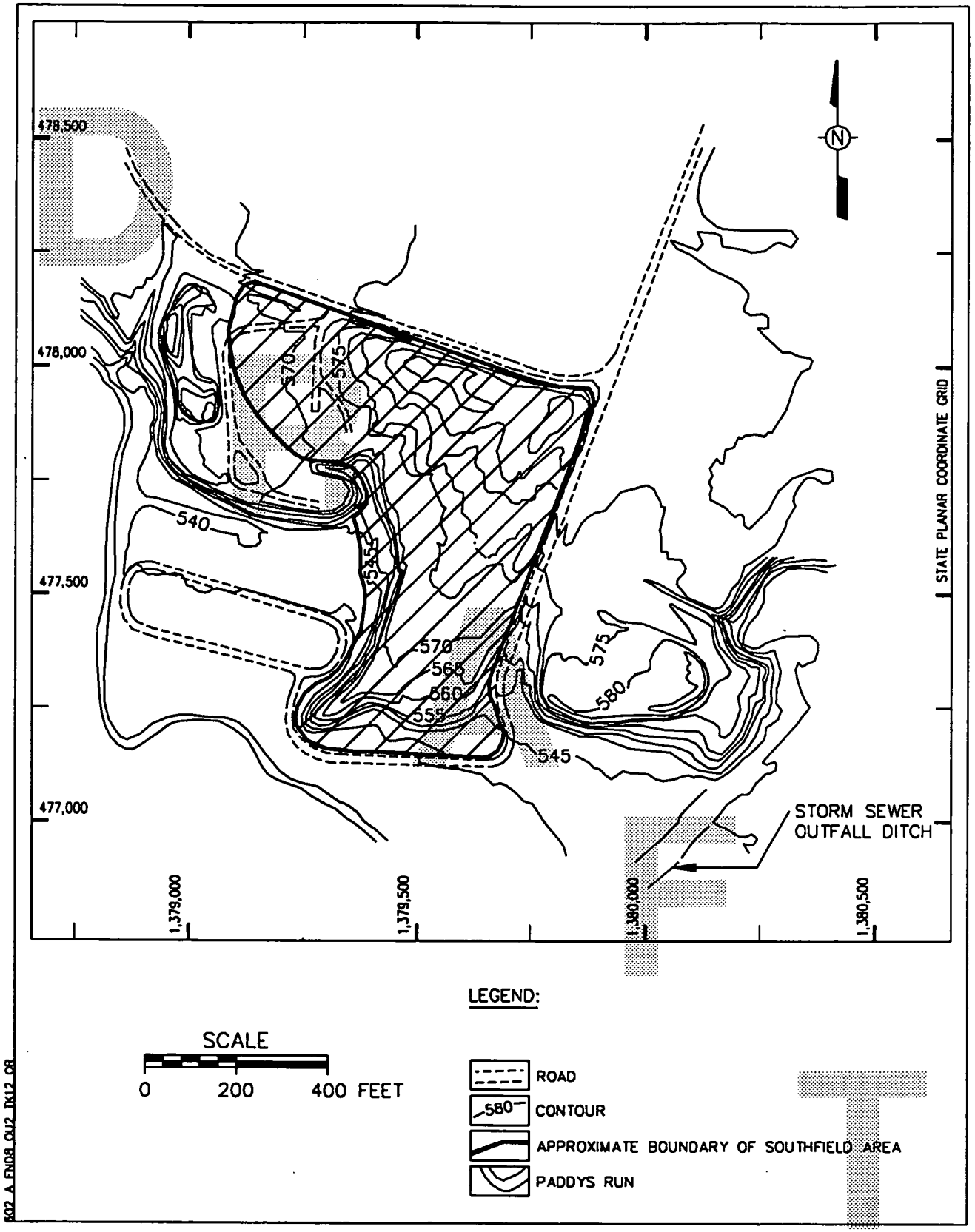

FIGURE 1-7. SOUTHFIELD

2.0

2.0 IDENTIFICATION AND SCREENING OF TECHNOLOGIES AND PROCESS OPTIONS

2.1 INTRODUCTION

This section discusses the development and screening of the technologies and process options used to assemble the remedial action alternatives for Operable Unit 2. The steps involved in this screening include:

- Develop media-specific remedial action objectives
- Develop media-specific general response actions
- Identify and screen remedial technologies within each general response action
- Identify and screen process options within each technology

In the case of Operable Unit 2, the general response actions were similar for each medium of concern; therefore, a single set of general response actions was used to determine technologies and process options. The following paragraphs discuss the process of alternative development and screening.

2.2 REMEDIAL ACTION OBJECTIVES

Remedial action objectives (RAOs) are medium-specific, operable unit-specific cleanup goals for protecting human health and the environment. The objectives must address the contaminants of concern and the exposure routes and receptors identified in the Operable Unit 2 Baseline Risk Assessment.

In determining RAOs, all significant sources and exposure pathways must be identified to ensure that the RAO for a single source or pathway adequately protects the receptor from the total risk that may be associated with the site. At the FMPC, this concern is addressed by limiting the risk from a single operable unit to 25 percent of the total allowable risk. Twenty-five percent was chosen as the allowable risk from a single operable unit because the FMPC RI/FS is being managed as four "source" operable units and a single "environmental media" operable unit. Conservatism is built into this criterion because the same receptor is not likely to be affected by the exposure pathways associated with all operable units. If a single operable unit is identified as contributing multiple significant sources or exposure pathways by which a single constituent may contact a receptor, operable unit-specific RAOs will address this issue.

As stated in the preamble to the National Oil and Hazardous Substances Contingency Plan (NCP), chemical-specific applicable or relevant and appropriate requirements (ARARs) will be used to the degree possible to determine remediation goals for the operable unit. Where ARARs do not exist for a constituent, risk-based cleanup goals will be developed as suggested by EPA.

2.2.1 Point of Compliance

For each operable unit at the FMPC, the point of compliance must be identified. The point of compliance is the geographical location at which the RAO must be achieved. At most hazardous waste sites, the point of compliance is the nearest identified receptor location for each exposure pathway.

The baseline risk assessment for Operable Unit 2 identifies two major human-exposure categories: current land-use exposures, and future potential land-use exposures. The current exposure setting at the FMPC is based on the assumption of active institutional control (e.g., fencing, restricted access, security measures, etc.). These controls are assumed to remain in place for 100 years, as required by DOE Order 5280.2A. After 100 years, it is assumed that no active controls can be relied on for protection of human health, however, passive controls may be assumed for some areas of the FMPC. Passive institutional controls include such measures as deed restriction and monolith-type markers that warn against human intrusion.

The point of compliance under current exposure conditions would be the FMPC property boundary. However, to be health protective in developing RAOs, once institutional controls are lost after 100 years, the point of compliance becomes the boundary of the waste area. If passive controls can be assumed for a waste area, the point of compliance is the boundary of the waste unit. The points of compliance for Operable Unit 2 are based on the following assumptions:

- The Sanitary Landfill and Lime Sludge Ponds, because of their proximity to the waste storage area and the prodution area, will remain under passive controls after 100 years. Therefore, their points of compliance are the boundary of the waste area.
- The Southfield and Fly Ash areas will be without passive controls after 100 years. Therefore, their points of compliance are the center of the waste areas.

For Operable Unit 2, it must be demonstrated that remedial alternatives achieve airborne and direct radiation RAOs for the radionuclides of potential concern and meet drinking water RAOs for both radionuclides and nonradioactive chemicals of potential concern.

2.2.2 Contaminants of Potential Concern

Contaminants of potential concern for Operable Unit 2 are identified in the baseline risk assessment. Those associated with significant current and future exposure pathways and associated media are listed in Table 2-1.

2.2.3 Remedial Action Objectives Based on Applicable or Relevant and Appropriate Requirements

The development of RAOs is concurrent with the identification of ARARs. In the case of the FMPC, ARARs may need to be interpreted in relation to site-specific conditions to ensure sufficient health protection based on multiple sources and pathways. As stated in Section 2.2, 25 percent of the chemical-specific ARAR is the RAO for a single operable unit. The 25 percent may need to be adjusted if a single operable unit contains multiple sources or exposure pathways.

Chemical-specific ARARs have been identified for the control of radionuclide concentrations in air and groundwater and for chemical concentrations in drinking water. These chemical-specific ARARs are listed in Table 2-2. In the case where both a maximum contaminant level (MCL) and a proposed MCL exists for a constituent, the proposed MCL is used to develop the RAO.

2.2.4 Remedial Action Objectives Based on Risk Criteria

For several constituents in Operable Unit 2, no MCLs or proposed MCLs exist. In this case, the RAO is based on available toxicity information. EPA provides guidance on using toxicity-based references doses (RfDs) and cancer potency factors (CPFs) to determine acceptable intake levels in water in a manner similar to the method used to develop MCLs. Briefly, the RAO is estimated using the following steps:

- Determine the acceptable daily intake, or RfD, for noncarcinogens based on dose response data and appropriate safety factors.
- Determine the acceptable risk level for carcinogens.
- Determine the acceptable water concentration (c) based on the assumption that a 70-kilogram adult drinks two liters of water per day, such that:
  [(c mg/l)(2 liter/day)]/70 kg = RfD (mg/kg/day), for noncarcinogens or
  [(c mg/l)(2 liter/day)]/70 kg = (acceptable risk level)/CPF mg/kg/day), for carcinogens.

TABLE 2-1

CHEMICALS AND RADIONUCLIDES OF POTENTIAL CONCERN IN OPERABLE UNIT 2

DRAFT

Organic Compounds

Acenapthene
Acetone
Anthracene
Aroclor-1242
Aroclor-1248
Aroclor-1254
Aroclor-1260
Benzo(a)anthracene
Benzo(a)pyrene
Benzo(b)fluoranthene
Benzo(ghi)perylene
Benzo(k)fluoranthene
Benzoic acid
Bis(2-ethyl hexyl)phthalate
2-butanone
Butyl benzyl phthalate
Carbon disulfide
Chlordane
Chloroform
Chrysene
Dibenzo(a,h)anthracene
Dibenzofuran
1,1 - dichloroethane
2,4 - dimethyl phenol
di-n-butyl phthalate
di-n-octyl phthalate
Ethylbenzene
Fluoranthene
Fluorene
Indeno(1,2,3-cd)pyrene
Methylene chloride
Methylnaphthalene
4 - methyl phenol
Naphthalene
N - nitrosodiphenylamine
Pentachlorophenol
Phenanthrene
Phenol
Tetrachloroethene
Toluene
Trichloroethene
1,1,1 - trichloroethane
1,1,2 - trichloro - 1,2,2 - trifluoro ethane
Xylenes (Total)

Inorganic Analytes

Arsenic
Cadmium
Cobalt
Lead
Manganese
Mercury
Nickel
Zinc

Radionuclides

Ra-226
Ra-228
Th-228
Th-230
Th-232
U-234
U-235
U-238

TABLE 2-2

OPERABLE UNIT 2 ARAR

Chemical-Specific	Standard	ARAR/TBC	Regulation
Airborne Radionuclide Emission (Except Airborne Rn-222)	Public Dose < 10 mrem/yr	Applicable	40CFR61, Subpart H
Radiation Dose Limits (All Pathways)	100 mrem/year	To Be Considered	DOE Order 5400.5
Chemicals or Radionuclides in Drinking Water	Arsenic <0.05 mg/L Cadmium <0.01 mg/L Mercury <0.002 mg/L Lead <0.05 mg/L Chloroform <0.1 mg/L Trichloroethene <0.005 mg/L 1,1,1-Trichloroethane <0.2 mg/L	Applicable	40CFR141.11 OAC3645-81-11
Chemicals or Radionuclides in Drinking Water	Cadmium <0.005 mg/L Benzo(a)anthracene <0.0001 mg/L Benzo(a)pyrene <0.0002 mg/L Benzo(b)fluoranthene <0.0002 mg/L Benzo(k)fluoranthene <0.0002 mg/L Ethylbenzene <0.7 mg/L Pentachlorophenol <0.2 mg/L Tetrachloroethene <0.005 mg/L Toluene <2.0 mg/L Xylenes <10 mg/L PCBs <0.0005 mg/L Bis(2-ethylhexyl)phthalate <0.004 mg/L Chlordane <0.002 mg/L Methylene chloride <0.005 mg/L	To Be Considered Proposed Rule	40CFR Parts 141,142, 143

556

48

- Apply any site-specific or operable unit-specific relative source contribution factors. The acceptable risk level for carcinogens as specified by the NCP is 10^{-4} to 10^{-6}. Twenty-five percent of this is 2.5×10^{-5} to 2.5×10^{-7}.

2.2.5 Summary of Operable Unit 2 Remedial Action Objectives

RAOs for all relevant media associated with Operable Unit 2 are summarized in Figure 2-1. As shown, many of the RAOs for Operable Unit 2 are based on chemical-specific ARARs. Risk-based RAOs had to be developed for one inorganic metal and for eleven organic compounds for the groundwater pathway. RAOs for each medium are briefly summarized below. An RAO that must be applied across all media is that total cancer risk from radionuclides be below 25 percent of the 10^{-4} to 10^{-6} goal set forth in the NCP, or 2.5×10^{-5} to 2.5×10^{-7}.

2.2.5.1 Direct Radiation

A goal for remediation of Operable Unit 2 is to prevent penetrating radiation doses to the public from exceeding 25 percent of the 100-mrem annual dose limit, as specified in DOE Order 5400.5. This order has been identified as a "to be considered" (TBC) for Operable Unit 2.

2.2.5.2 Air

One ARAR was identified as applicable to Operable Unit 2: 40CFR61, subpart H 102. Part 102 allows for a 10 mrem/yr limit to the public for all airborne radionuclides except Rn-222. Twenty-five percent of this limit is 2.5 mrem/yr.

2.2.5.3 Soils

Remedial actions related to soils surrounding Operable Unit 2 must meet the following objectives: prevent direct contact with soils, and inhalation of soils that contain chemicals and radionuclides at concentrations that do not meet RAOs human health or environmental criteria. In both cases, the goal is to prevent contact with chemicals in the soils that would result in cancer risks of 2.5×10^{-5} to 2.5×10^{-7}, and noncancer hazards that would be above a hazard index of 0.25. Radionuclides concentrations must also satisfy DOE Order 5400.5, which limits the radiation dose to 100 mrem/yr (or an operable unit limit of 25 mrem/yr).

The environmental objectives of preventing contact with the soils are similar except quantitative goals are based on potential contributions to a receiving water body in excess of Ambient Water Quality Criteria (AWQC), as laid out in the Clean Water Act (CWA). AWQC are nonenforceable goals for protecting the environment.

2.2.5.4 Sediments and Surface Water

RAOs for sediments and surface water are based on the same criteria used to determine RAOs for soil.

MEDIUM	REMEDIAL ACTION OBJECTIVE	GENERAL RESPONSE ACTION
1. DIRECT RADIATION	***For Human Health:*** Prevent current and future radiation doses from exceeding 25 mrem/year. ***For Environmental Protection:*** Prevent current and future radiation emissions from causing detectable chronic effects.	No Action Institutional Actions Containment Collection/Treatment Removal/Treatment/Disposal
2. AIR	***For Human Health:*** Prevent current and future above-background airborne radiation doses from exceeding 2.5 mrem, and radon concentrations from exceeding risk levels in excess of 2.5E-05 to 2.5E-07 cancer risk. Prevent current and future airborne chemical concentrations from exceeding risk levels of 2.5E-05 to 2.5E-07 cancer risk and/or a hazard index of 0.25. ***For Environmental Protection:*** Prevent current and future radiation emissions from causing detectable chronic effects.	No Action Institutional Actions Containment Containment/Treatment Removal/Treatment/Disposal
3. SOILS	***For Human Health:*** Prevent direct contact with contaminated soils encompassing Operable Unit 2. Prevent erosion of soil to surface waterways that would result in cancer risks of 2.5E-05 to 2.5E-07, or not cancer hazards resulting in a hazard index of 0.25. Prevent contact with Radium and Thorium to 5 pCi/g in the first 15cm of soil, and 15 pCi/g below. Prevent contact with other nuclides to concentrations resulting in doses greater than 25 mrem. ***For Environmental Protection:*** Prevent erosion of soil that would contribute to surface water concentrations of chemicals in Operable Unit 2 from reaching concentrations in excess of 25 percent of those reported in Table 2-6.	No Action Institutional Actions Containment Containment/Treatment Removal/Treatment/Disposal

602 A FND181 OU2 TK12 OR

FIGURE 2-1. REMEDIAL OBJECTIVES AND ASSOCIATED GENERAL RESPONSE ACTIONS

MEDIUM	REMEDIAL ACTION OBJECTIVE	GENERAL RESPONSE ACTION
4. SEDIMENTS AND SURFACE WATER	***For Human Health:*** Prevent releases of Operable Unit 2 constituents into creek sediments that would result in persons having direct contact with radioactive and nonradioactive constituents in excess of 2.5E-05 to 2.5E-07 cancer risk, and noncarcinogenic constituents resulting in hazard indices greater than 0.25.	No Action Institutional Actions Containment Containment/Treatment Removal/Treatment/Disposal
	For Environmental Protection: Prevent releases of chemicals and radionuclides from Operable Unit 2 from reaching surface water at concentrations in excess of 25 percent of those reported in Table 2-6.	
5. GROUNDWATER	***For Human Health:*** Prevent releases of radionuclides to the groundwater in excess of concentrations shown on Table 2-3 . Prevent release of inorganic and organic chemicals to the groundwater in excess of concentrations shown in Tables 2-4 and 2-5.	No Action Institutional Actions Containment Containment/Treatment Removal/Treatment/Disposal
	For Environmental Protection: None. Biota are not exposed to chemical and radionuclide concentrations in groundwater.	
6. SOLID WASTES	***For Human Health:*** Prevent direct contact with waste. Prevent circumstances that may provoke leaching of wastes to groundwater. Prevent current and future radiation doses migrating from wastes from exceeding 25 mrem/year.	No Action Institutional Actions Containment Containment/Treatment Removal/Treatment/Disposal
	For Environmental Protection: Prevent direct contact with waste.	

602 A FND182 OU2 TK12 OR

FIGURE 2-1. REMEDIAL OBJECTIVES AND ASSOCIATED GENERAL RESPONSE ACTIONS (Continued)

2.2.5.5 Groundwater

Of great concern is the potential for the constituents of Operable Unit 2 to enter the underlying Great Miami Aquifer sometime in the future. Remedial Action Objectives developed for groundwater specify that future releases should not exceed MCLs specified in 40CFR141. For chemicals without MCLs, future releases should not exceed risk-based derived cleanup levels. Specific groundwater RAOs for Operable Unit 2 are listed in Tables 2-3 through 2-5.

Aside from radium, which has a promulgated MCL, RAOs for radionuclides, present as chemicals of concern were derived by dividing the allowable drinking water radiation dose of 4 mrem/yr (DOE Order 5400.5) by the annual drinking water intake (730 liters) and the radiation dose conversion factor (dcf). Thus for uranium, with a dcf of 2.69 x 10^{-4} mrem/pCi, the resultant acceptable drinking water concentration is 20 pCi/L. Table 2-6 lists the resulting concentrations for all radionuclides associated with Operable Unit 2. These limits do not reflect the "sum" rule, which requires that the sum of the radiation dose from all radionuclides (excluding Ra-226, Ra-228, and radon) not exceed 4 mrem/yr.

2.2.5.6 Solid Waste

The qualitative RAO identified for the solid waste is to prevent direct contact with the waste. Appendix B lists the remedial action objectives for organic and inorganic contaminants of concern for Operable Unit 2 waste areas.

2.3 GENERAL RESPONSE ACTIONS

General response actions are broad categories of media-specific remediation actions that will satisfy one or more of the RAOs. In the case of Operable Unit 2, these general response actions include no action, institutional action, containment with and without treatment, and removal with treatment and disposal. Figure 2-1 shows the relationship between the RAOs and these general response actions.

2.3.1 No Action

The no-action general response action is required for consideration by the NCP and will be carried through as an alternative. The no-action alternative would provide no remediation and would simply leave the Operable Unit 2 wastes in their present state. It would include the installation of long-term monitoring equipment. The no-action alternative provides a baseline against which the other alternatives can be compared.

TABLE 2-3

GROUNDWATER REMEDIAL ACTION OBJECTIVES FOR RADIONUCLIDES OPERABLE UNIT 2

Constituents	Drinking Water Concentration Corresponding to 4 mrem/yr (pCi/L)	FMPC Action Level for a Single Operable Unit[a] (pCi/L)
U-234	19	5
U-235	21	5
U-238	21	4
Th-228	14	3
Th-230	10	2
Th-232	2	0.5
Ra-226	5[b]	1
Ra-228	5[b]	1

[a] Twenty-five percent of ARAR or risk-based standard.

[b] Values listed are the Maximum Contaminant Levels (MCLs) for the radionuclides as defined in 40CFR141. Calculations of concentrations by the same method as the other radionuclides results in the following values; Ra-226=4pCi/L, Ra-228=4pCi/L.

TABLE 2-4

GROUNDWATER REMEDIAL ACTION OBJECTIVE FOR ORGANIC CHEMICALS
OPERABLE UNIT 2

Chemical	Basis for Remedial Objective	Acceptable Water Concentration (mg/L)	FMPC Action Level for a Single Operable Unit[a] (mg/L)
Acenapthene	–	–	–
Acetone	0.1 (mg/kg/d) RfD	3.5	0.9
Anthracene	0.3 (mg/kg/d)RfD	10.5	2.6
Aroclor-1242	0.0005 (mg/L) MCL	0.0005	0.00013
Aroclor-1248	0.0005 (mg/L) MCL	0.0005	0.00013
Aroclor-1254	0.0005 (mg/L) MCL	0.0005	0.00013
Aroclor-1260	0.0005 (mg/L) MCL	0.0005	0.00013
Benzo(a)anthracene	0.0001 (mg/L) PMCL	0.0001	0.000025
Benzo(a)pyrene	0.0002 (mg/L) PMCL	0.0002	0.00005
Benzo(b)fluoranthene	0.0002 (mg/L) PMCL	0.0002	0.00005
Benzo(ghi)perylene	–	–	–
Benzo(k)fluoranthene	0.0002 (mg/L) PMCL	0.0002	0.00005
Benzoic acid	4.0 (mg/kg/d) RfD	140	35.0
Bis(2-ethylhexyl) phthalate	0.004 (mg/L) PMCL	0.004	0.001
2-Butanone	–	–	–

556

54

TABLE 2-4
(continued)

Chemical	Basis for Remedial Objective	Acceptable Water Concentration (mg/L)	FMPC Action Level for a Single Operable Unit[a] (mg/L)
Butyl benzylphthalate	0.2 (mg/kg/d) RfD	7.0	1.75
Carbon disulfide	–	–	–
Chlordane	0.002 (mg/L) PMCL	0.002	0.0005
Chloroform	0.1 (mg/L) MCL	0.1	2.5×10^{-2}
Chrysene	–	–	–
Dibenzo(a,h)anthracene	–	–	–
Dibenzofuran	–	–	–
1,1-Dichloroethane	0.091 $(mg/kg/d)^{-1}$ CPF	3.8×10^{-4}	9.5×10^{-5}
2,4-Dimethylphenol	–	–	–
Di-n-butylphthalate	–	–	–
Di-n-octylphthalate	–	–	–
Ethylbenzene	0.7 (mg/L) PMCL	0.7	0.175
Fluoranthene	0.04 (mg/kg/d) RfD	1.4	0.35
Fluorene	0.04 (mg/kg/d) RfD	1.4	0.35

55

556

TABLE 2-4
(continued)

Chemical	Basis for Remedial Objective	Acceptable Water Concentration (mg/L)	FMPC Action Level for a Single Operable Unit[a] (mg/L)
Indeno(1,2,3-cd)pyrene	–	–	–
Methylene chloride	0.005 (mg/L) PMCL	0.005	0.00125
Methylnaphthalene	–	–	–
4-methylphenol	–	–	–
Naphthalene	0.004 (mg/kg/d) RfD	0.14	0.035
N-nitrosodiphenylamine	4.9×10^{-3} $(mg/kg/d)^{-1}$ CPF	7.1×10^{-3}	1.8×10^{-3}
Pentachlorophenol	0.2 (mg/L) PMCL	0.2	0.05
Phenanthrene	–	–	–
Phenol	0.6 (mg/kg/d) RfD	21.0	5.3
Tetrachoroethene	0.005 (mg/L) PMCL	0.005	0.00125
Toluene	2.0 (mg/L) PMCL	2.0	0.5
Trichloroethene	0.005 (mg/L) MCL	0.005	0.00125
1,1,1-Trichloroethane	0.2 (mg/L) MCL	0.2	0.05

556

52

TABLE 2-4
(continued)

Chemical	Basis for Remedial Objective	Acceptable Water Concentration (mg/L)	FMPC Action Level for a Single Operable Unit[a] (mg/L)
1,1,2-trichloro-1,2,2-trifluoroethane	30 (mg/kg/d) RfD	$1.1 \times 10^{+3}$	$2.6 \times 10^{+2}$
Xylenes (Total)	10.0 (mg/L) PMCL	10.0	2.5

[a] Twenty-five percent of ARAR of risk-based standard

556

57

TABLE 2-5

GROUNDWATER REMEDIAL ACTION OBJECTIVE FOR INORGANIC CHEMICALS OPERABLE UNIT 2

Chemical	Basis for Remedial Objective	Acceptable Water Concentration (mg/L)	FMPC Action Level for a Single Operable Unit[a] (mg/L)
Arsenic	0.05 mg/L MCL	0.05	0.01
Cadmium	0.005 mg/L PMCL	0.005	0.001
Cobalt	-	-	-
Lead	0.05 (mg/L) MCL	0.05	0.01
Manganese	0.2 mg/kg/d RfD	7.0	2
Mercury	0.002 (mg/L) MCL	0.002	0.0005
Nickel	0.1 (mg/L) PMCL	0.1	0.025
Zinc	0.2 mg/kg/d RfD	7.0	2

[a] Twenty-five percent of the Acceptable Water Concentration.

DRAFT

TABLE 2-6

FRESHWATER CHRONIC WATER QUALITY CRITERIA[a]

Chemical	Concentration (µg/L)
acenapthene	520[b]
chlordane	0.0043
chloroform	1,240[b]
Naphthalene	620[b]
Pentachlorophenol	13[c]
Phenol	2,560[b]
Tetrachloroethene	840[b]
Trichloroethene	21,900[b]
arsenic	48[b]
cadmium	1.1[d]
lead	3.2[d]
mercury	0.012
nickel	160[d]
zinc	47[e]

[a] Source: USEPA. 1986. Quality Criteria for water 1986. Office of Water Regulations and Standards, Washington, D.C. EPA 44015-86-001. (40CFR131.21)

[b] Value presented is the Lowest Observed Effect Level

[c] pH dependent criteria (7.8 pH used)

[d] Source: 51FR43665

DRAFT

2.3.2 Institutional Actions

Institutional actions refer to actions taken by the responsible authorities to minimize the potential for dangers to human health and the environment as a result of any ongoing activities. Examples of institutional actions include monitoring and access control. It should be noted that the no-action alternative may include some institutional actions.

2.3.3 Containment

Containment refers to the prevention of any uncontrolled leakage of waste materials and/or gases by proper in situ isolation of the waste. Isolation techniques in this category include run-on/runoff control, and capping. Waste stabilization technologies are included when applicable to the waste. Several waste stabilization technologies are available for this purpose.

2.3.4 Containment With Treatment

Containment with treatment is similar to containment as mentioned above, with the exception that leachate could be controlled by subsurface flow control.

2.3.5 Removal, Treatment, and Disposal

This general response action considers treatment of the waste after removal from its present location. After the treatment process, the waste would be disposed either on property or off site.

2.4 IDENTIFICATION AND SCREENING OF TECHNOLOGIES AND PROCESS OPTIONS

2.4.1 Identification and Screening of Technologies

The following section contains a summary of remedial technologies and process options identified for Operable Unit 2. Figures 2-2 through 2-4 document the technology screening process for Operable Unit 2. Rationale for why certain technology types were eliminated for Operable Unit 2 wastes are presented in the following sections. Table 2-7 lists technologies applicable to Operable Unit 2.

DRAFT

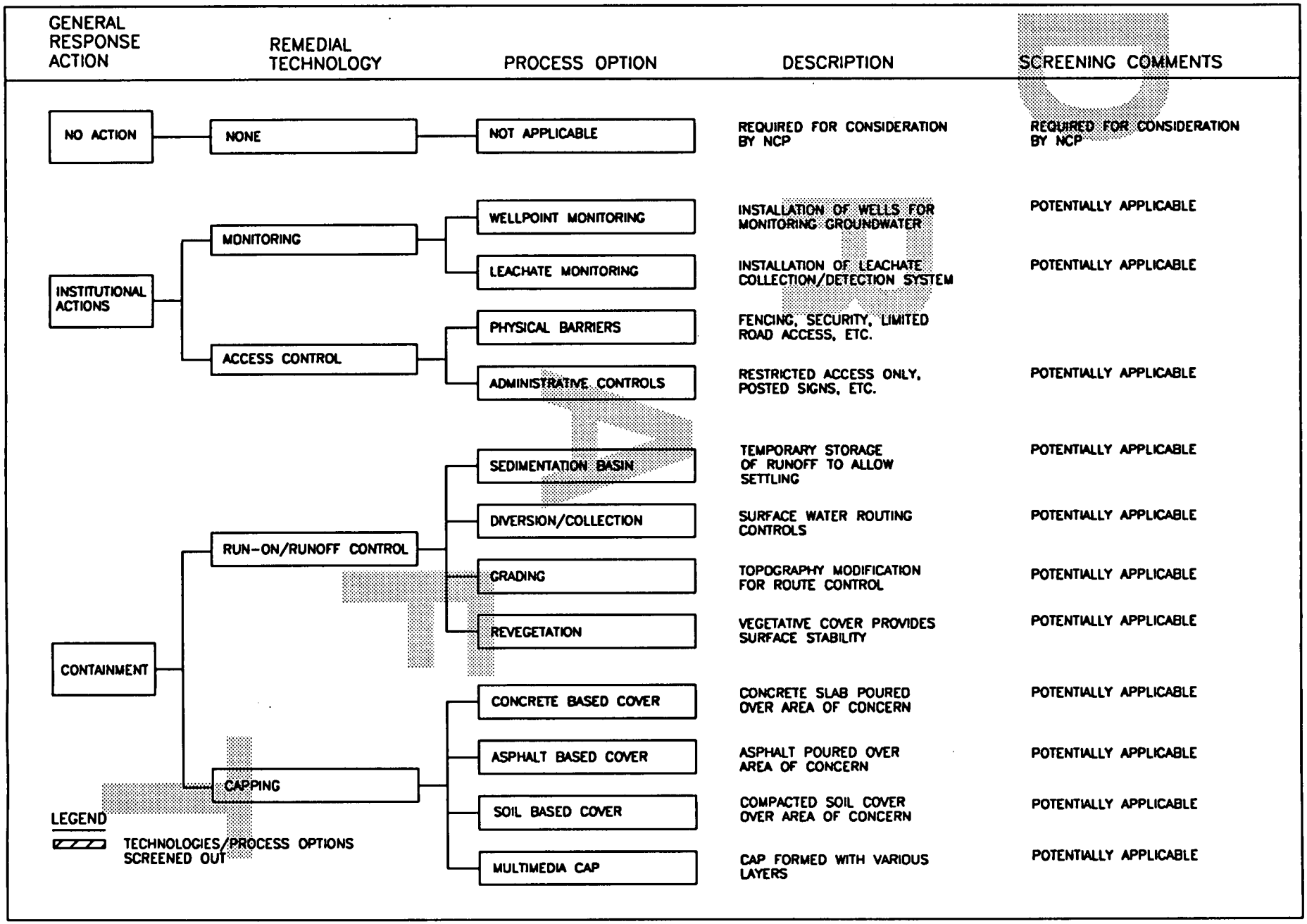

FIGURE 2-2. INITIAL SCREENING OF TECHNOLOGIES AND PROCESS OPTIONS-SANITARY LANDFILL

GENERAL RESPONSE ACTION	REMEDIAL TECHNOLOGY	PROCESS OPTION	DESCRIPTION	SCREENING COMMENTS
CONTAINMENT (CONTINUED)	IN SITU STABILIZATION	GROUT INJECTION	DIRECT INJECTION OF GROUT USING A GROUT GUN	NOT REQUIRED FOR SANITARY LANDFILL WASTE
		SHALLOW-SOIL MIXING	CHEMICAL AND/OR FLY ASH BASED STABILIZATION	NOT REQUIRED FOR SANITARY LANDFILL WASTE
		DYNAMIC COMPACTION/ VACUUM EXTRACTION	REMOVAL OF SUBSURFACE WATER IN WASTE	NOT REQUIRED FOR SANITARY LANDFILL WASTE
		SURCHARGING	COMPACTION OF MATERIAL BY ADDITION OF SOIL COVER	NOT REQUIRED FOR SANITARY LANDFILL WASTE
CONTAINMENT/ TREATMENT	RUN-ON/RUNOFF CONTROL	SEDIMENTATION BASIN	TEMPORARY STORAGE OF RUNOFF TO ALLOW SETTLING	POTENTIALLY APPLICABLE
		DIVERSION/COLLECTION	SURFACE WATER ROUTING CONTROLS	POTENTIALLY APPLICABLE
		GRADING	TOPOGRARHY MODIFICATION FOR ROUTE CONTROL	POTENTIALLY APPLICABLE
		REVEGETATION	VEGETATIVE COVER PROVIDES SURFACE STABILITY	POTENTIALLY APPLICABLE
	CAPPING	CONCRETE BASED COVER	CONCRETE SLAB POURED OVER AREA OF CONCERN	POTENTIALLY APPLICABLE
		ASPHALT BASED COVER	ASPHALT POURED OVER AREA OF CONCERN	POTENTIALLY APPLICABLE
		SOIL BASED COVER	COMPACTED SOIL COVER OVER AREA OF CONCERN	POTENTIALLY APPLICABLE
		MULTIMEDIA CAP	CAP FORMED WITH VARIOUS LAYERS	POTENTIALLY APPLICABLE

LEGEND

TECHNOLOGIES/PROCESS OPTIONS SCREENED OUT

602 A FND178 OU2 TK12

FIGURE 2-2 INITIAL SCREENING OF TECHNOLOGIES AND PROCESS OPTIONS-SANITARY LANDFILL, (Continued)

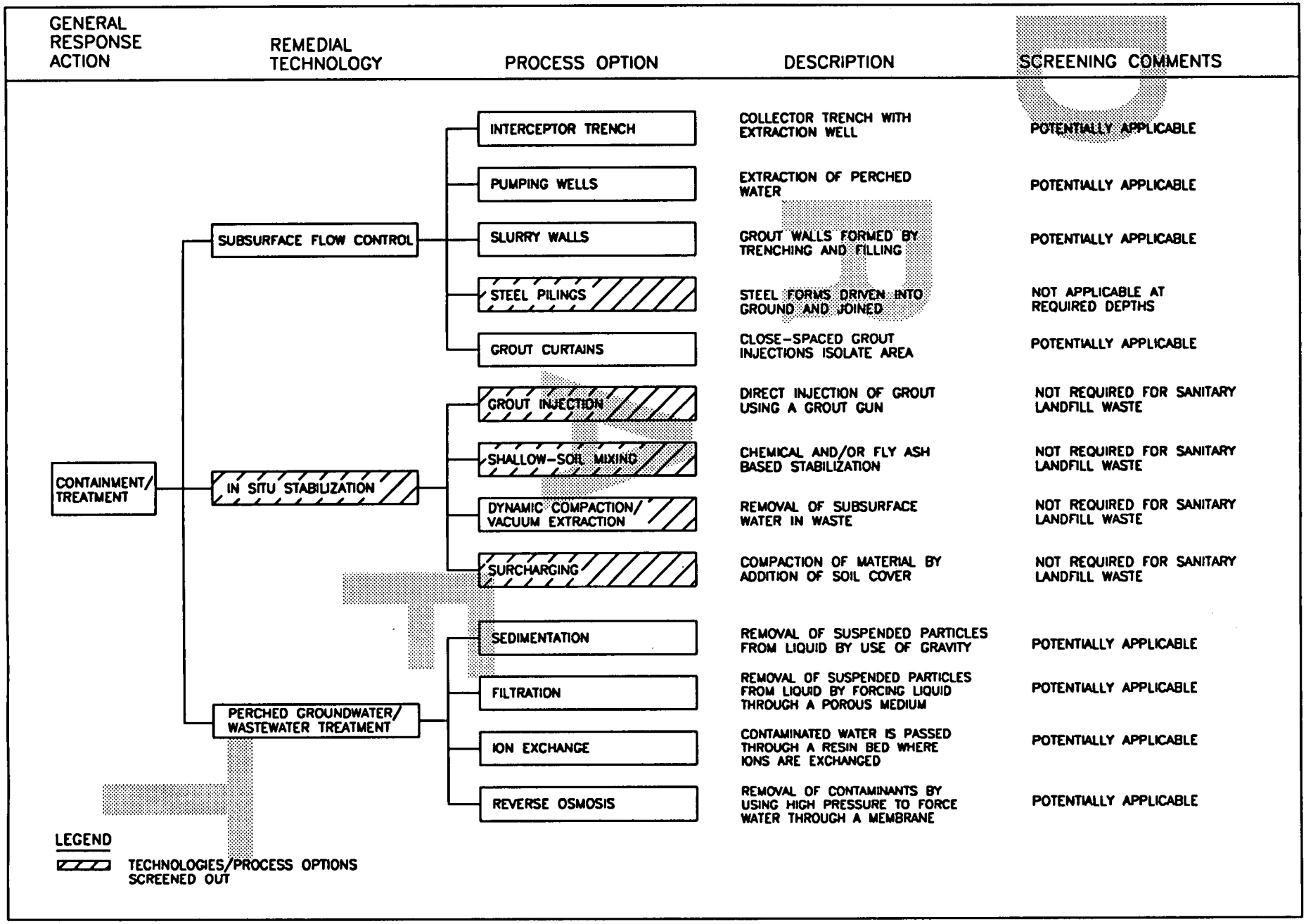

FIGURE 2-2. INITIAL SCREENING OF TECHNOLOGIES AND PROCESS OPTIONS-SANITARY LANDFILL. (Continued)

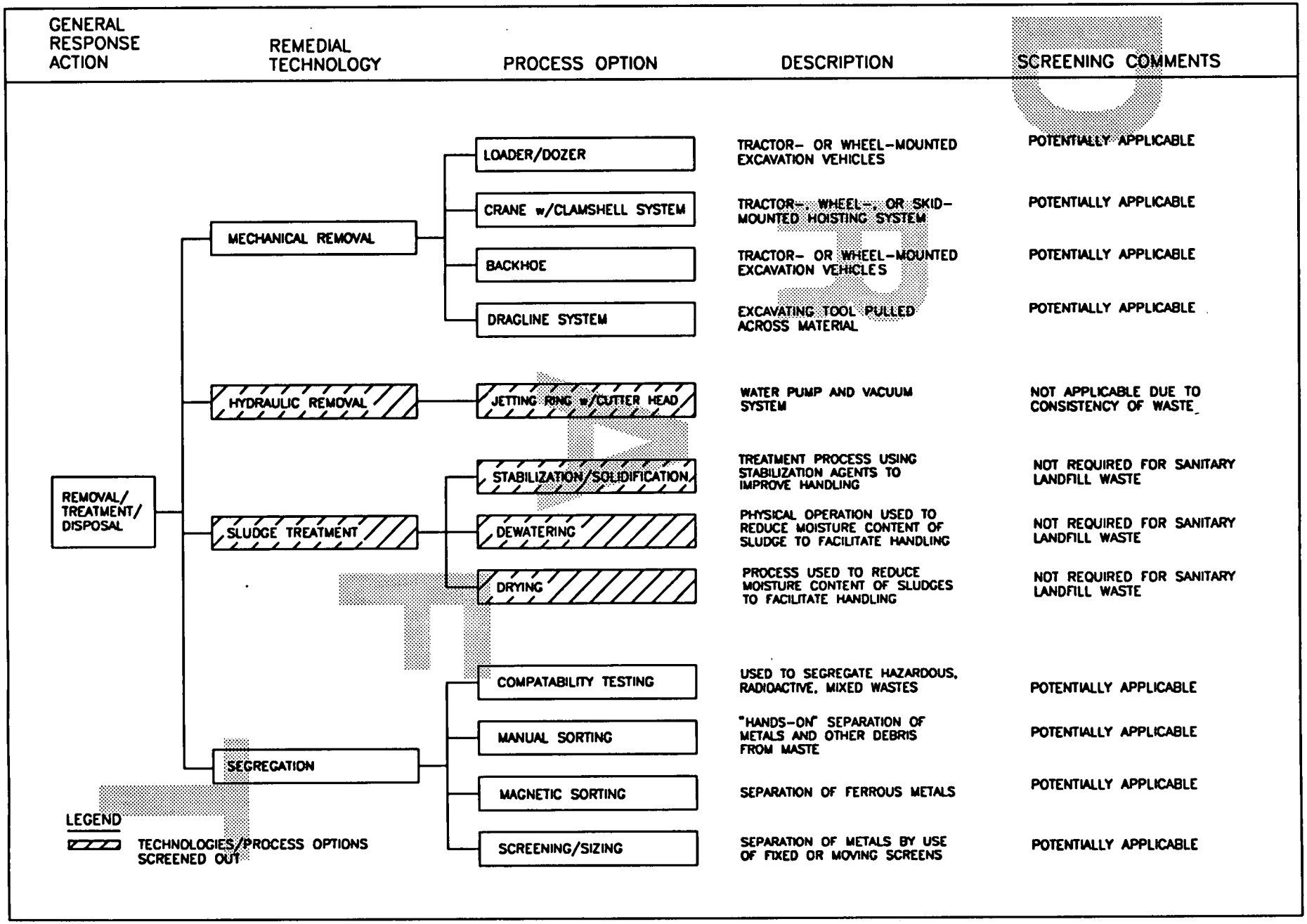

FIGURE 2-2. INITIAL SCREENING OF TECHNOLOGIES AND PROCESS OPTIONS-SANITARY LANDFILL. (Continued)

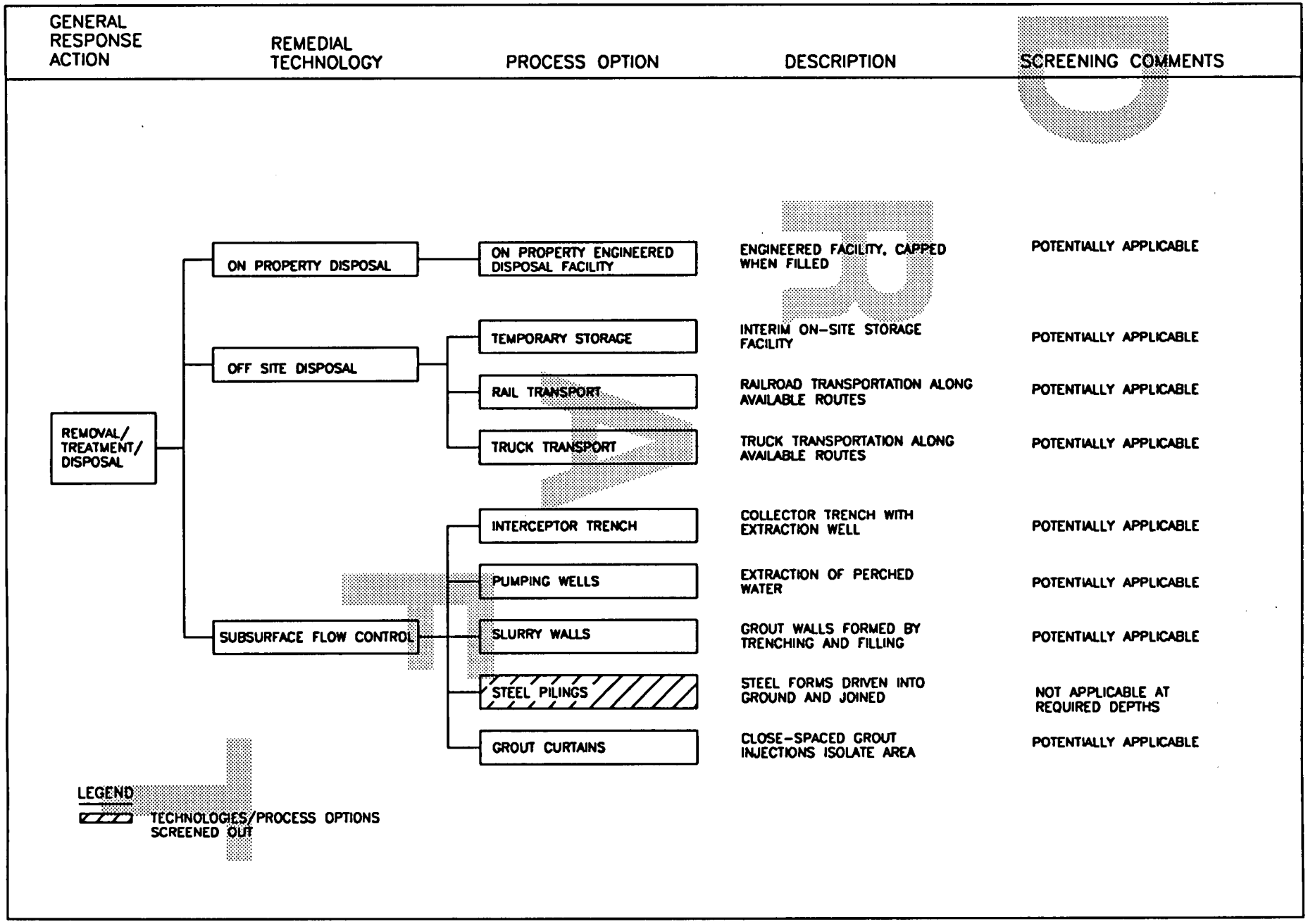

FIGURE 2-2. INITIAL SCREENING OF TECHNOLOGIES AND PROCESS OPTIONS-SANITARY LANDFILL, (Continued)

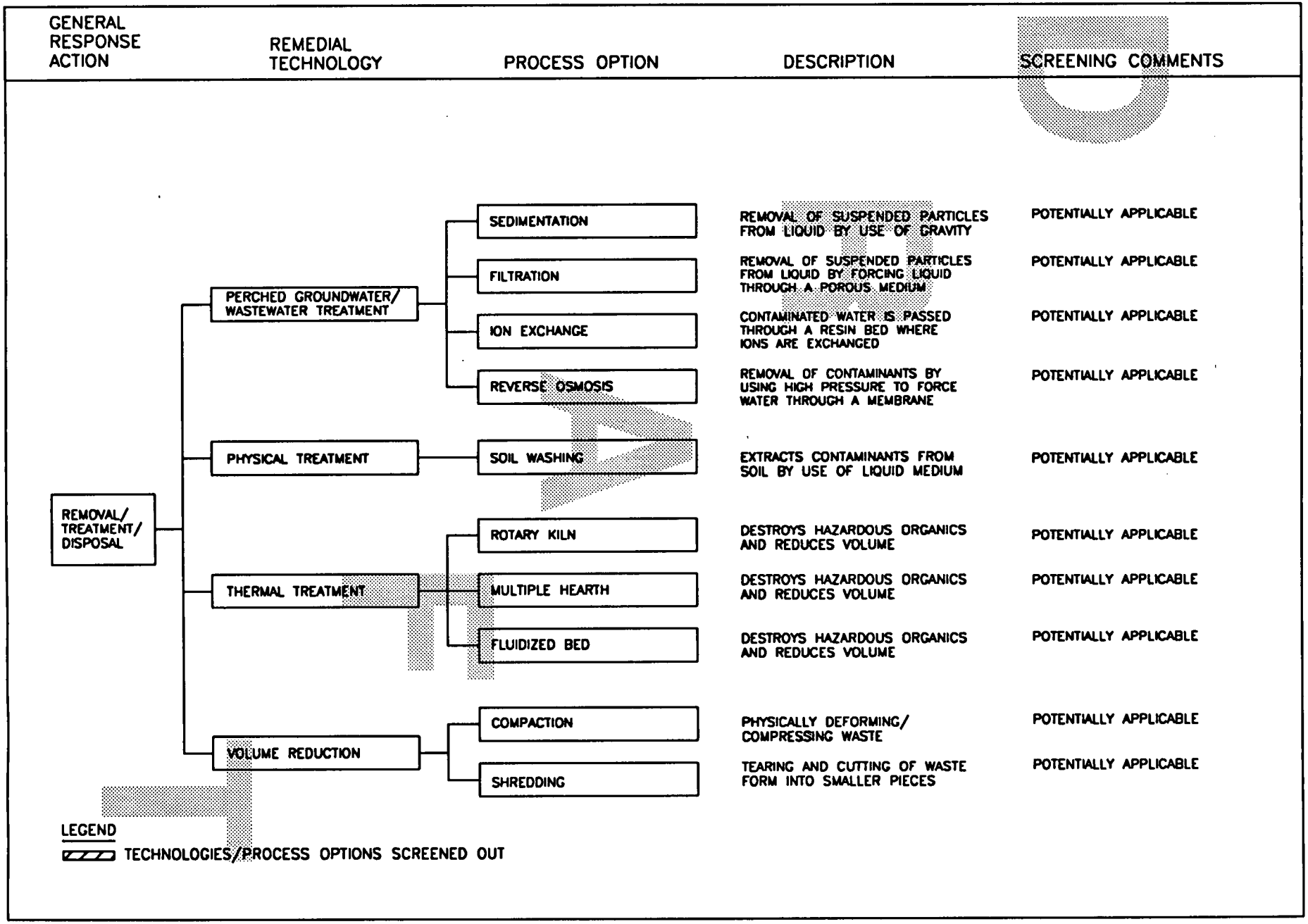

FIGURE 2-2. INITIAL SCREENING OF TECHNOLOGIES AND PROCESS OPTIONS-SANITARY LANDFILL. (Continued)

GENERAL RESPONSE ACTION	REMEDIAL TECHNOLOGY	PROCESS OPTION	DESCRIPTION	SCREENING COMMENTS
NO ACTION	NONE	NOT APPLICABLE	REQUIRED FOR CONSIDERATION BY NCP	REQUIRED FOR CONSIDERATION BY NCP
INSTITUTIONAL ACTIONS	MONITORING	WELLPOINT MONITORING	INSTALLATION OF WELLS FOR MONITORING GROUNDWATER	POTENTIALLY APPLICABLE
		LEACHATE MONITORING	INSTALLATION OF LEACHATE COLLECTION/DETECTION SYSTEM	POTENTIALLY APPLICABLE
	ACCESS CONTROL	PHYSICAL BARRIERS	FENCING, SECURITY, LIMITED ROAD ACCESS, ETC.	POTENTIALLY APPLICABLE
		ADMINISTRATIVE CONTROLS	RESTRICTED ACCESS ONLY, POSTED SIGNS, ETC.	POTENTIALLY APPLICABLE
CONTAINMENT	RUN-ON/RUNOFF CONTROL	SEDIMENTATION BASIN	TEMPORARY STORAGE OF RUNOFF TO ALLOW SETTLING	POTENTIALLY APPLICABLE
		DIVERSION/COLLECTION	SURFACE WATER ROUTING CONTROLS	POTENTIALLY APPLICABLE
		GRADING	TOPOGRAPHY MODIFICATION FOR ROUTE CONTROL	POTENTIALLY APPLICABLE
		REVEGETATION	VEGETATIVE COVER PROVIDES SURFACE STABILITY	POTENTIALLY APPLICABLE
	CAPPING	CONCRETE BASED COVER	CONCRETE SLAB POURED OVER AREA OF CONCERN	POTENTIALLY APPLICABLE
		ASPHALT BASED COVER	ASPHALT POURED OVER AREA OF CONCERN	POTENTIALLY APPLICABLE
		SOIL BASED COVER	COMPACTED SOIL COVER OVER AREA OF CONCERN	POTENTIALLY APPLICABLE
		MULTIMEDIA CAP	CAP FORMED WITH VARIOUS LAYERS	POTENTIALLY APPLICABLE

LEGEND

TECHNOLOGIES/PROCESS OPTIONS SCREENED OUT

602 A FND180 OU2 TK12

FIGURE 2-3. INITIAL SCREENING OF TECHNOLOGIES AND PROCESS OPTIONS-LIME SLUDGE PONDS

GENERAL RESPONSE ACTION	REMEDIAL TECHNOLOGY	PROCESS OPTION	DESCRIPTION	SCREENING COMMENTS
CONTAINMENT (CONTINUED)	IN SITU STABILIZATION	GROUT INJECTION	DIRECT INJECTION OF GROUT USING A GROUT GUN	POTENTIALLY APPLICABLE
		SHALLOW-SOIL MIXING	CHEMICAL AND/OR FLY ASH BASED STABILIZATION	POTENTIALLY APPLICABLE
		DYNAMIC COMPACTION/ VACUUM EXTRACTION	REMOVAL OF SUBSURFACE WATER IN WASTE	POTENTIALLY APPLICABLE
		SURCHARGING	COMPACTION OF MATERIAL BY ADDITION OF SOIL COVER	POTENTIALLY APPLICABLE
CONTAINMENT/ TREATMENT	RUN-ON/RUNOFF CONTROL	SEDIMENTATION BASIN	TEMPORARY STORAGE OF RUNOFF TO ALLOW SETTLING	POTENTIALLY APPLICABLE
		DIVERSION/COLLECTION	SURFACE WATER ROUTING CONTROLS	POTENTIALLY APPLICABLE
		GRADING	TOPOGRARHY MODIFICATION FOR ROUTE CONTROL	POTENTIALLY APPLICABLE
		REVEGETATION	VEGETATIVE COVER PROVIDES SURFACE STABILITY	POTENTIALLY APPLICABLE
	CAPPING	CONCRETE BASED COVER	CONCRETE SLAB POURED OVER AREA OF CONCERN	POTENTIALLY APPLICABLE
		ASPHALT BASED COVER	ASPHALT POURED OVER AREA OF CONCERN	POTENTIALLY APPLICABLE
		SOIL BASED COVER	COMPACTED SOIL COVER OVER AREA OF CONCERN	POTENTIALLY APPLICABLE
		MULTIMEDIA CAP	CAP FORMED WITH VARIOUS LAYERS	POTENTIALLY APPLICABLE

LEGEND

TECHNOLOGIES/PROCESS OPTIONS SCREENED OUT

602 A FND180 OU2 TK12

FIGURE 2-3. INITIAL SCREENING OF TECHNOLOGIES AND PROCESS OPTIONS-LIME SLUDGE POND, (Continued)

GENERAL RESPONSE ACTION	REMEDIAL TECHNOLOGY	PROCESS OPTION	DESCRIPTION	SCREENING COMMENTS
CONTAINMENT/ TREATMENT	SUBSURFACE FLOW CONTROL	INTERCEPTOR TRENCH	COLLECTOR TRENCH WITH EXTRACTION WELL	POTENTIALLY APPLICABLE
		PUMPING WELLS	EXTRACTION OF PERCHED WATER	POTENTIALLY APPLICABLE
		SLURRY WALLS	GROUT WALLS FORMED BY TRENCHING AND FILLING	POTENTIALLY APPLICABLE
		STEEL PILINGS	STEEL FORMS DRIVEN INTO GROUND AND JOINED	NOT APPLICABLE AT REQUIRED DEPTHS
		GROUT CURTAINS	CLOSE-SPACED GROUT INJECTIONS ISOLATE AREA	POTENTIALLY APPLICABLE
	IN SITU STABILIZATION	GROUT INJECTION	DIRECT INJECTION OF GROUT USING A GROUT GUN	POTENTIALLY APPLICABLE
		SHALLOW-SOIL MIXING	CHEMICAL AND/OR FLY ASH BASED STABILIZATION	POTENTIALLY APPLICABLE
		DYNAMIC COMPACTION/ VACUUM EXTRACTION	REMOVAL OF SUBSURFACE WATER IN WASTE	POTENTIALLY APPLICABLE
		SURCHARGING	COMPACTION OF MATERIAL BY ADDITION OF SOIL COVER	POTENTIALLY APPLICABLE
	PERCHED GROUNDWATER/ WASTEWATER TREATMENT	SEDIMENTATION	REMOVAL OF SUSPENDED PARTICLES FROM LIQUID BY USE OF GRAVITY	POTENTIALLY APPLICABLE
		FILTRATION	REMOVAL OF SUSPENDED PARTICLES FROM LIQUID BY FORCING LIQUID THROUGH A POROUS MEDIUM	POTENTIALLY APPLICABLE
		ION EXCHANGE	CONTAMINATED WATER IS PASSED THROUGH A RESIN BED WHERE IONS ARE EXCHANGED	POTENTIALLY APPLICABLE
		REVERSE OSMOSIS	REMOVAL OF CONTAMINANTS BY USING HIGH PRESSURE TO FORCE WATER THROUGH A MEMBRANE	POTENTIALLY APPLICABLE

LEGEND

TECHNOLOGIES/PROCESS OPTIONS SCREENED OUT

FIGURE 2-3. INITIAL SCREENING OF TECHNOLOGIES AND PROCESS OPTIONS-LIME SLUDGE PONDS. (Continued)

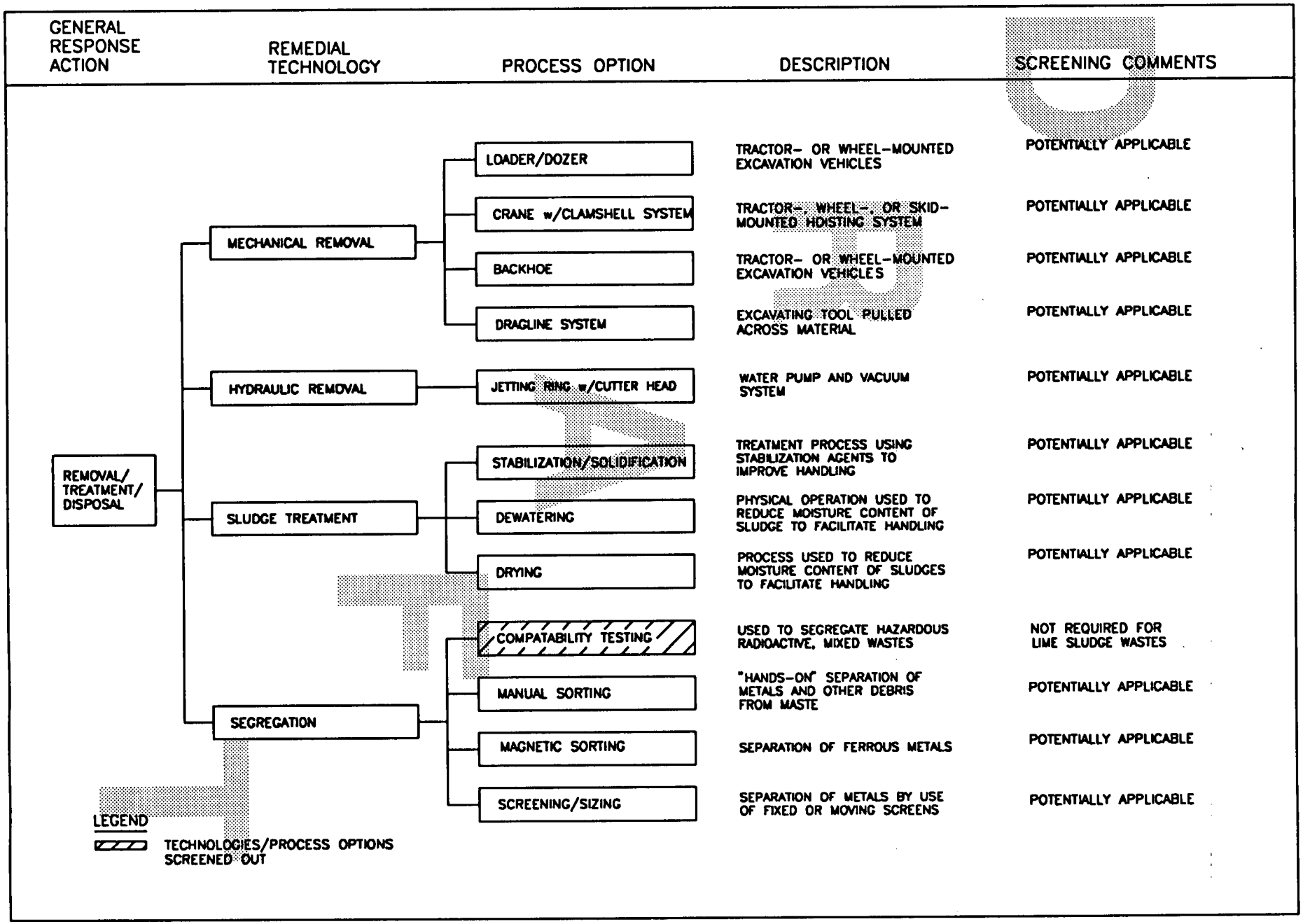

FIGURE 2-3. INITIAL SCREENING OF TECHNOLOGIES AND PROCESS OPTIONS-LIME SLUDGE PONDS. (Continued)

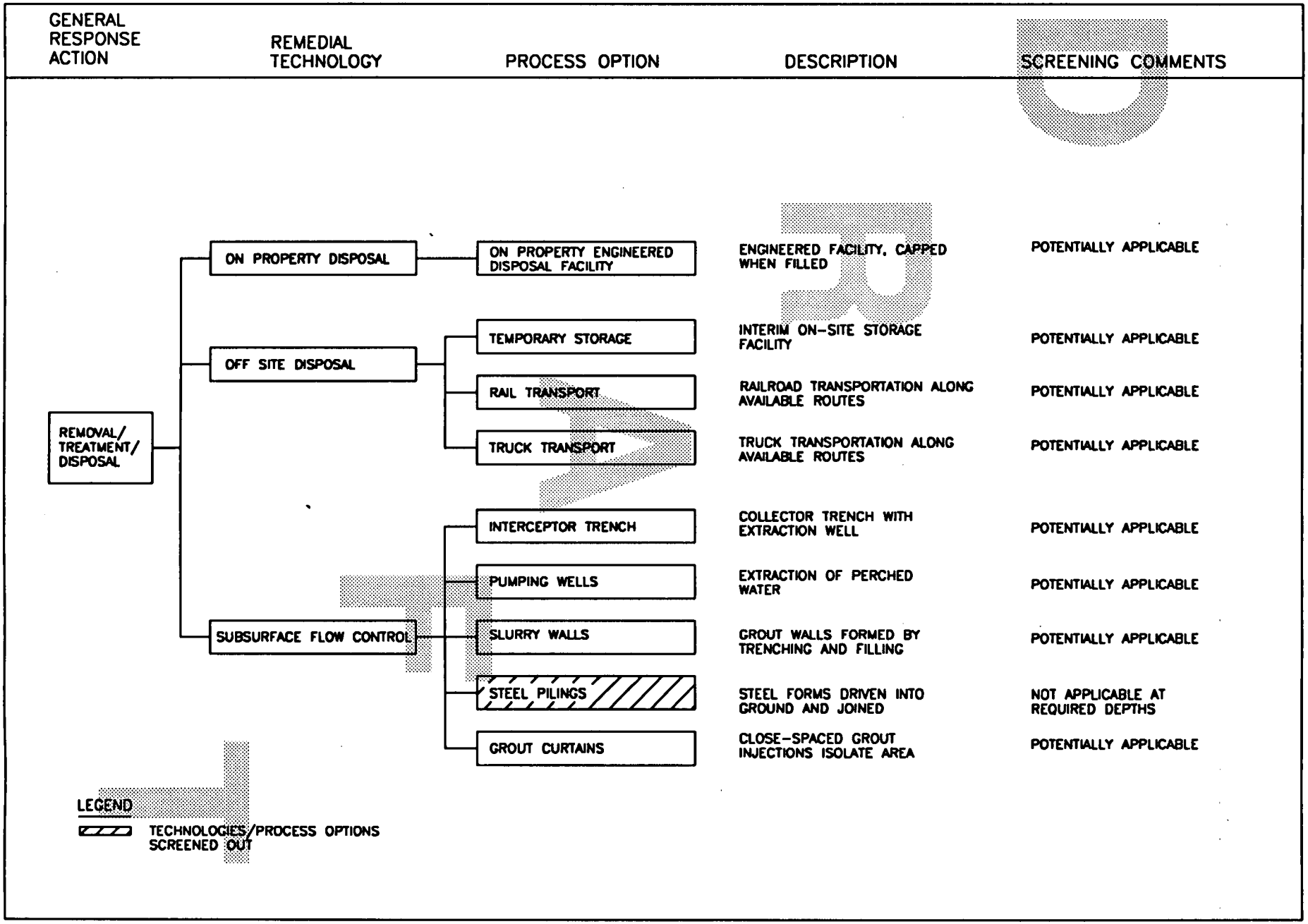

FIGURE 2-3. INITIAL SCREENING OF TECHNOLOGIES AND PROCESS OPTIONS-LIME SLUDGE PONDS, (Continued)

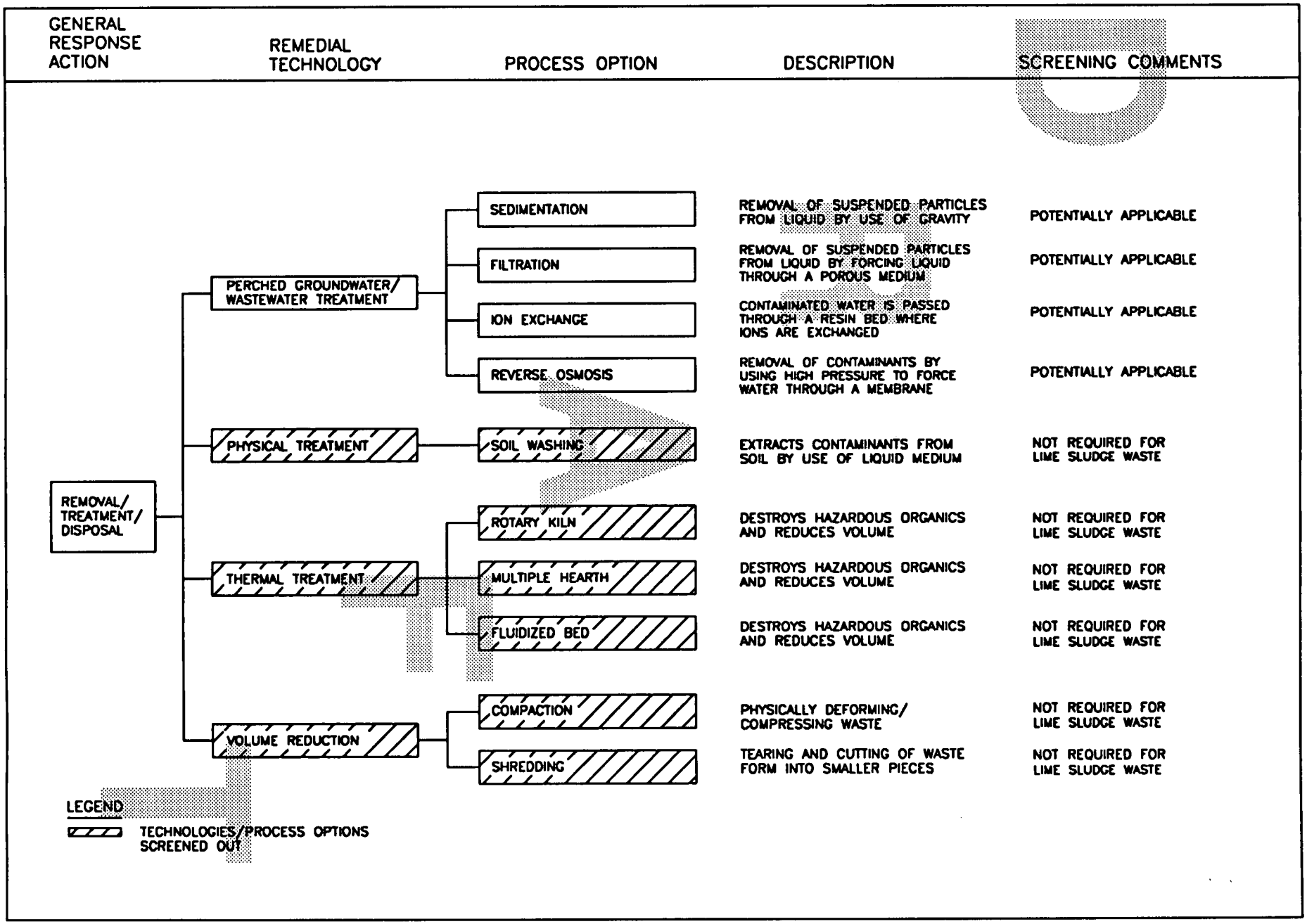

FIGURE 2-3. INITIAL SCREENING OF TECHNOLOGIES AND PROCESS OPTIONS-LIME SLUDGE POND, (Continued)

GENERAL RESPONSE ACTION	REMEDIAL TECHNOLOGY	PROCESS OPTION	DESCRIPTION	SCREENING COMMENTS
NO ACTION	NONE	NOT APPLICABLE	REQUIRED FOR CONSIDERATION BY NCP	REQUIRED FOR CONSIDERATION BY NCP
INSTITUTIONAL ACTIONS	MONITORING	WELLPOINT MONITORING	INSTALLATION OF WELLS FOR MONITORING GROUNDWATER	POTENTIALLY APPLICABLE
		LEACHATE MONITORING	INSTALLATION OF LEACHATE COLLECTION/DETECTION SYSTEM	POTENTIALLY APPLICABLE
	ACCESS CONTROL	PHYSICAL BARRIERS	FENCING, SECURITY, LIMITED ROAD ACCESS, ETC.	POTENTIALLY APPLICABLE
		ADMINISTRATIVE CONTROLS	RESTRICTED ACCESS ONLY, POSTED SIGNS, ETC.	POTENTIALLY APPLICABLE
CONTAINMENT	RUN-ON/RUNOFF CONTROL	SEDIMENTATION BASIN	TEMPORARY STORAGE OF RUNOFF TO ALLOW SETTLING.	POTENTIALLY APPLICABLE
		DIVERSION/COLLECTION	SURFACE WATER ROUTING CONTROLS	POTENTIALLY APPLICABLE
		GRADING	TOPOGRAPHY MODIFICATION FOR ROUTE CONTROL	POTENTIALLY APPLICABLE
		REVEGETATION	VEGETATIVE COVER PROVIDES SURFACE STABILITY	POTENTIALLY APPLICABLE
	CAPPING	CONCRETE BASED COVER	CONCRETE SLAB POURED OVER AREA OF CONCERN	POTENTIALLY APPLICABLE
		ASPHALT BASED COVER	ASPHALT POURED OVER AREA OF CONCERN	POTENTIALLY APPLICABLE
		SOIL BASED COVER	COMPACTED SOIL COVER OVER AREA OF CONCERN	POTENTIALLY APPLICABLE
		MULTIMEDIA CAP	CAP FORMED WITH VARIOUS LAYERS	POTENTIALLY APPLICABLE

602 A FN0179 OU2 TK12

FIGURE 2-4. INITIAL SCREENING OF TECHNOLOGIES AND PROCESS OPTIONS-SOUTHFIELD/FLY ASH AREAS

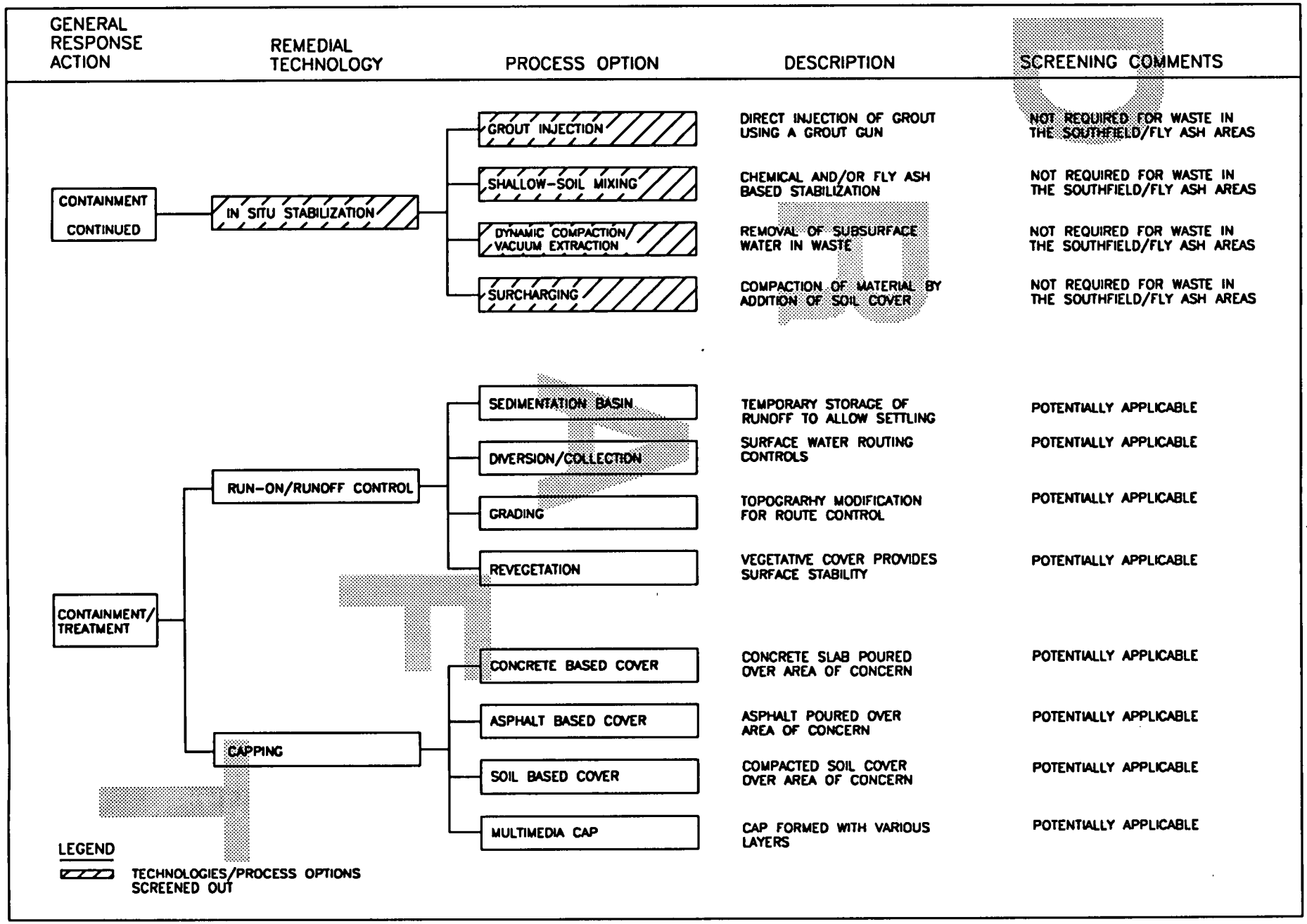

FIGURE 2-4. INITIAL SCREENING OF TECHNOLOGIES AND PROCESS OPTIONS – SOUTHFIELD/FLY ASH AREAS (Continued)

556

GENERAL RESPONSE ACTION	REMEDIAL TECHNOLOGY	PROCESS OPTION	DESCRIPTION	SCREENING COMMENTS
CONTAINMENT/ TREATMENT	SUBSURFACE FLOW CONTROL	INTERCEPTOR TRENCH	COLLECTOR TRENCH WITH EXTRACTION WELL	POTENTIALLY APPLICABLE
		PUMPING WELLS	EXTRACTION OF PERCHED WATER	POTENTIALLY APPLICABLE
		SLURRY WALLS	GROUT WALLS FORMED BY TRENCHING AND FILLING	POTENTIALLY APPLICABLE
		STEEL PILINGS	STEEL FORMS DRIVEN INTO GROUND AND JOINED	NOT APPLICABLE AT REQUIRED DEPTHS
		GROUT CURTAINS	CLOSE-SPACED GROUT INJECTIONS ISOLATE AREA	POTENTIALLY APPLICABLE
	IN SITU STABILIZATION	GROUT INJECTION	DIRECT INJECTION OF GROUT USING A GROUT GUN	NOT REQUIRED FOR WASTE IN THE SOUTHFIELD/FLY ASH AREAS
		SHALLOW-SOIL MIXING	CHEMICAL AND/OR FLY ASH BASED STABILIZATION	NOT REQUIRED FOR WASTE IN THE SOUTHFIELD/FLY ASH AREAS
		DYNAMIC COMPACTION/ VACUUM EXTRACTION	REMOVAL OF SUBSURFACE WATER IN WASTE	NOT REQUIRED FOR WASTE IN THE SOUTHFIELD/FLY ASH AREAS
		SURCHARGING	COMPACTION OF MATERIAL BY ADDITION OF SOIL COVER	NOT REQUIRED FOR WASTE IN THE SOUTHFIELD/FLY ASH AREAS
	PERCHED GROUNDWATER/ WASTEWATER TREATMENT	SEDIMENTATION	REMOVAL OF SUSPENDED PARTICLES FROM LIQUID BY USE OF GRAVITY	POTENTIALLY APPLICABLE
		FILTRATION	REMOVAL OF SUSPENDED PARTICLES FROM LIQUID BY FORCING LIQUID THROUGH A POROUS MEDIUM	POTENTIALLY APPLICABLE
		ION EXCHANGE	CONTAMINATED WATER IS PASSED THROUGH A RESIN BED WHERE IONS ARE EXCHANGED	POTENTIALLY APPLICABLE
		REVERSE OSMOSIS	REMOVAL OF CONTAMINANTS BY USING HIGH PRESSURE TO FORCE WATER THROUGH A MEMBRANE	POTENTIALLY APPLICABLE

LEGEND

TECHNOLOGIES/PROCESS OPTIONS SCREENED OUT

FIGURE 2-4. INITIAL SCREENING OF TECHNOLOGIES AND PROCESS OPTIONS - SOUTH FIELD/FLY ASH AREAS (Continued)

GENERAL RESPONSE ACTION	REMEDIAL TECHNOLOGY	PROCESS OPTION	DESCRIPTION	SCREENING COMMENTS
REMOVAL/ TREATMENT/ DISPOSAL	MECHANICAL REMOVAL	LOADER/DOZER	TRACTOR- OR WHEEL-MOUNTED EXCAVATION VEHICLES	POTENTIALLY APPLICABLE
		CRANE w/CLAMSHELL SYSTEM	TRACTOR-, WHEEL-, OR SKID-MOUNTED HOISTING SYSTEM	POTENTIALLY APPLICABLE
		BACKHOE	TRACTOR- OR WHEEL-MOUNTED EXCAVATION VEHICLES	POTENTIALLY APPLICABLE
		DRAGLINE SYSTEM	EXCAVATING TOOL PULLED ACROSS MATERIAL	POTENTIALLY APPLICABLE
	HYDRAULIC REMOVAL	JETTING RING w/CUTTER HEAD	WATER PUMP AND VACUUM SYSTEM	NOT APPLICABLE DUE TO CONSISTENCY OF WASTE
	SLUDGE TREATMENT	STABILIZATION/SOLIDIFICATION	TREATMENT PROCESS USING STABILIZATION AGENTS TO IMPROVE HANDLING	NOT REQUIRED FOR SOUTHFIELD/FLY ASH WASTE
		DEWATERING	PHYSICAL OPERATION USED TO REDUCE MOISTURE CONTENT OF SLUDGE TO FACILITATE HANDLING	NOT REQUIRED FOR SOUTHFIELD/FLY ASH WASTE
		DRYING	PROCESS USED TO REDUCE MOISTURE CONTENT OF SLUDGES TO FACILITATE HANDLING	NOT REQUIRED FOR SOUTHFIELD/FLY ASH WASTE
	SEGREGATION	COMPATABILITY TESTING	USED TO SEGREGATE HAZARDOUS, RADIOACTIVE, MIXED WASTES	NOT REQUIRED FOR SOUTHFIELD/FLY ASH WASTE
		MANUAL SORTING	"HANDS-ON" SEPARATION OF METALS AND OTHER DEBRIS FROM WASTE	POTENTIALLY APPLICABLE
		MAGNETIC SORTING	SEPARATION OF FERROUS METALS	POTENTIALLY APPLICABLE
		SCREENING/SIZING	SEPARATION OF METALS BY USE OF FIXED OR MOVING SCREENS	POTENTIALLY APPLICABLE

LEGEND

TECHNOLOGIES/PROCESS OPTIONS SCREENED OUT

FIGURE 2-4. INITIAL SCREENING OF TECHNOLOGIES AND PROCESS OPTIONS-SOUTHFIELD/FLY ASH AREAS. (Continued)

GENERAL RESPONSE ACTION	REMEDIAL TECHNOLOGY	PROCESS OPTION	DESCRIPTION	SCREENING COMMENTS
REMOVAL/ TREATMENT/ DISPOSAL	ON PROPERTY DISPOSAL	ON PROPERTY ENGINEERED DISPOSAL FACILITY	ENGINEERED FACILITY, CAPPED WHEN FILLED	POTENTIALLY APPLICABLE
	OFF SITE DISPOSAL	TEMPORARY STORAGE	INTERIM ON-SITE STORAGE FACILITY	POTENTIALLY APPLICABLE
		RAIL TRANSPORT	RAILROAD TRANSPORTATION ALONG AVAILABLE ROUTES	POTENTIALLY APPLICABLE
		TRUCK TRANSPORT	TRUCK TRANSPORTATION ALONG AVAILABLE ROUTES	POTENTIALLY APPLICABLE
	SUBSURFACE FLOW CONTROL	INTERCEPTOR TRENCH	COLLECTOR TRENCH WITH EXTRACTION WELL	POTENTIALLY APPLICABLE
		PUMPING WELLS	EXTRACTION OF PERCHED WATER	POTENTIALLY APPLICABLE
		SLURRY WALLS	GROUT WALLS FORMED BY TRENCHING AND FILLING	POTENTIALLY APPLICABLE
		STEEL PILINGS	STEEL FORMS DRIVEN INTO GROUND AND JOINED	NOT APPLICABLE AT REQUIRED DEPTHS
		GROUT CURTAINS	CLOSE-SPACED GROUT INJECTIONS ISOLATE AREA	POTENTIALLY APPLICABLE

LEGEND

TECHNOLOGIES/PROCESS OPTIONS SCREENED OUT

602 A FN0179 OU2 TX12

FIGURE 2-4. INITIAL SCREENING OF TECHNOLOGIES AND PROCESS OPTIONS – SOUTHFIELD/FLY ASH AREAS (Continued)

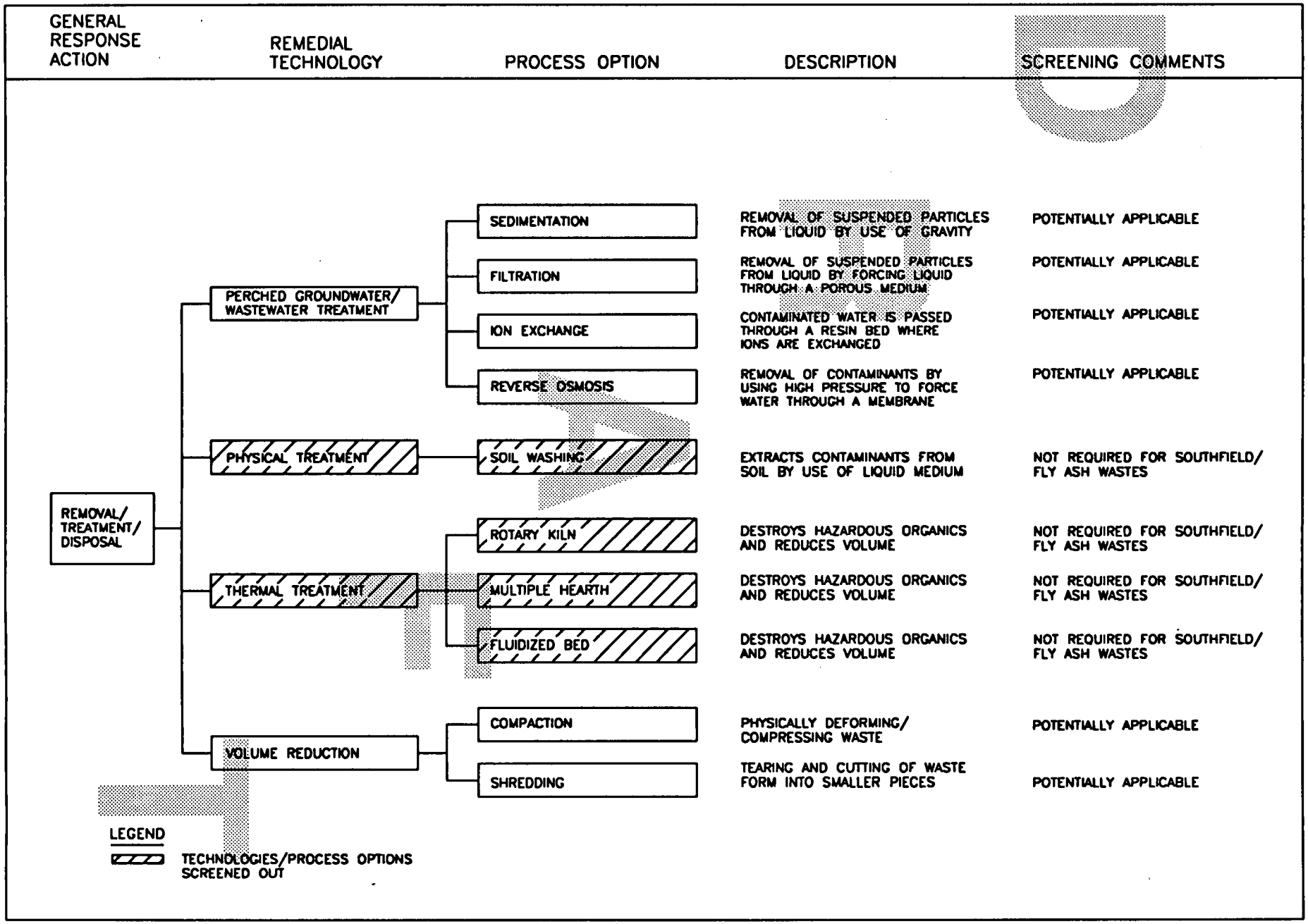

FIGURE 2-4. INITIAL SCREENING OF TECHNOLOGIES AND PROCESS OPTIONS – SOUTHFIELD/FLY ASH AREAS (Continued)

TABLE 2-7

REMEDIAL TECHNOLOGIES APPLICABLE TO OPERABLE UNIT 2

Monitoring	Hydraulic Removal
Access Control	Sludge Treatment
Run-on/Runoff Control	On-Property Disposal
Capping	Off-Site Disposal
In situ Stabilization	Physical Treatment
Perched Groundwater Treatment	Thermal Treatment
Mechanical Removal	Volume Reduction
	Segregation

2.4.1.1 Sanitary Landfill

Under the general response action of containment, the remedial technology insitu stabilization was eliminated. The reason for this is that disposal of these wastes has occurred over time thus allowing natural consolidation. Standard Penetration Test (SPT) values from borings that were observed during sampling indicate that the Sanitary Landfill wastes are capable of supporting a cap.

Under the general response action of containment/treatment, in situ stabilization is eliminated for the reason given previously. A technology of subsurface flow control is included in this general response action. An additional technology of perched groundwater treatment is added to remove hazardous or radiological constituents.

Under the general response action of removal/treatment/disposal, various technologies including removal, segregation, treatment, and disposal are featured. Treatment of waste to remove hazardous constituents is included for the Sanitary Landfill. No records exist to confirm that hazardous wastes were placed in the Sanitary Landfill, but data indicates that the Sanitary Landfill contains the highest diversity of organics of all the Operable Unit 2 waste areas. Characteristic tests to determine whether Sanitary Landfill waste is hazardous were performed as part of the Roy F. Weston Characterization Investigation Study (CIS) (Weston 1987b); the results indicated that the wastes are not characteristic hazardous waste. However, due to the hetergenerous nature of waste in the Sanitary Landfill, technologies are included to screen for the possibility of hazardous waste. It should be noted that the detected concentrations of the organics in the Sanitary Landfill are low, and the attention is given to

RCRA Subtitle C in the event that higher concentrations of organics are encountered. Figure 2-2 documents the screening process for the Sanitary Landfill.

Other technologies, subsurface flow control and perched groundwater/wastewater treatment are included for removal of any residual contamination present in perched groundwater.

2.4.1.2 Lime Sludge Ponds

Under the general response action of containment, insitu stabilization is included for the following reasons:

- The material has a high moisture content
- The SPT values recorded using sampling are very low; the present ability of the sludge to support a cap is very doubtful
- Settlement of the lime sludge may be excessive, resulting in damage to a cap.

As was the case for the Sanitary Landfill, subsurface flow control/perched groundwater treatment is included for the containment/treatment general response action.

Hydraulic removal is a technology that is especially suited to the nature of the lime sludge. Hydraulic removal has the advantage of utilizing the standing water and high moisture content of the sludges to aid in removal and subsequent solidification. Mechanical removal would be used to remove high solids sludge if there is residual lime sludge after the hydraulic-removal operation is completed.

Sludge treatment is a technology unique to the lime sludges of Operable Unit 2. This technology utilizes stabilizing agents to stabilize and solidify this waste. An optional process involves dewatering and drying the sludges prior to packaging.

Thermal treatment is not being considered for lime sludge, because the concentration of organic chemicals is low and hazardous constituents are not present in concentrations that cause concern.

Lime sludge is homogeneous in nature. Testing for hazardous characteristics was performed under the Weston CIS (Weston 1987b) and the results of these tests indicated no hazardous wastes present. Subsurface flow control and perched groundwater/wastewater treatment are included. Figure 2-3 documents the screening of technologies for the Lime Sludge Ponds.

2.4.1.3 Southfield/Fly Ash Areas

These areas (Southfield, Inactive Fly Ash Disposal Area, and Active Fly Ash Pile) are grouped together for the technology screening because their wastes are similar in terms of physical characteristics and location at the FMPC site. For the containment general response action, insitu stabilization is eliminated as a remedial technology for these wastes since SPT values indicate that they are capable of supporting a cap. For the containment/treatment general response action "subsurface flow control/perched groundwater treatment" are considered, as was the case for the Sanitary Landfill. Mechanical removal and segregation is included under the removal/treatment/disposal general response action. Segregation is needed to sort construction debris reportedly placed in these waste areas. Subsurface flow control/perched groundwater/wastewater treatment is once again included to remove residual contaminations that could be present in perched groundwater. Volume reduction includes compaction and shredding to reduce the volume of construction rubble.

Thermal treatment is eliminated from consideration for these waste units. The principle reason for preference of non-treatment of these large-volume, low-concentration wastes is based on data and on information provided in Section 1.5 of EPA Guidance for Conducting RI/FS (EPA 1988a). The screening of technologies for the Southfield/Fly Ash Areas is documented in Figure 2-4.

2.4.2 Evaluation of Process Options

Figures 2-5 through 2-7 present the results of process option screening for Operable Unit 2. The screening was performed individually for the Sanitary Landfill, Lime Sludge Ponds, and Southfield/Fly Ash Areas.

DRAFT

GENERAL RESPONSE ACTION	REMEDIAL TECHNOLOGY	PROCESS OPTION	EFFECTIVENESS	IMPLEMENTABILITY	COST
NO ACTION	NONE	NOT APPLICABLE	MAY NOT MEET RAO'S.	MAY NOT BE ACCEPTABLE TO PUBLIC.	NONE
INSTITUTIONAL ACTIONS	MONITORING	WELLPOINT MONITORING	USEFUL IN DOCUMENTING CONDITIONS. DOES NOT REDUCE RISK.	ALONE, MAY NOT BE ACCEPTABLE TO PUBLIC.	LOW
		LEACHATE MONITORING			
	ACCESS CONTROL	PHYSICAL BARRIERS	EFFECTIVENESS DEPENDS ON CONTINUED FUTURE IMPLEMENTATION. DOES NOT REDUCE CONTAMINATION.	ALONE, MAY NOT BE ACCEPTABLE TO PUBLIC.	LOW
		ADMINISTRATIVE CONTROLS			
CONTAINMENT	RUN-ON/RUNOFF CONTROL	SEDIMENTATION BASIN	EFFECTIVE WHEN COMBINED WITH CAPPING. ALONE, NOT AS EFFECTIVE.	EASILY IMPLEMENTED.	LOW
		DIVERSION/COLLECTION		EASILY IMPLEMENTED.	LOW
		GRADING		EASILY IMPLEMENTED.	LOW
		REVEGETATION		EASILY IMPLEMENTED.	LOW
	CAPPING	CONCRETE-BASED COVER	EFFECTIVE, BUT SUSCEPTIBLE TO WEATHERING AND CRACKING.	EASILY IMPLEMENTED. RESTRICTIONS ON FUTURE LAND USE.	HIGH
		ASPHALT-BASED COVER			MODERATE
		SOIL-BASED COVER	EFFECTIVE, LESS SUSCEPTIBLE TO WEATHERING AND CRACKING.	EASILY IMPLEMENTED. RESTRICTIONS ON FUTURE LAND USE.	LOW
		MULTIMEDIA CAP	EFFECTIVE. LEAST SUSCEPTIBLE TO CRACKING.	EASILY IMPLEMENTED. RESTRICTIONS ON FUTURE LAND USE.	MODERATE

LEGEND

PROCESS OPTIONS SCREENED OUT

602_A_FN0163_OU2_TK12_08

FIGURE 2-5. EVALUATION OF PROCESS OPTIONS - SANITARY LANDFILL

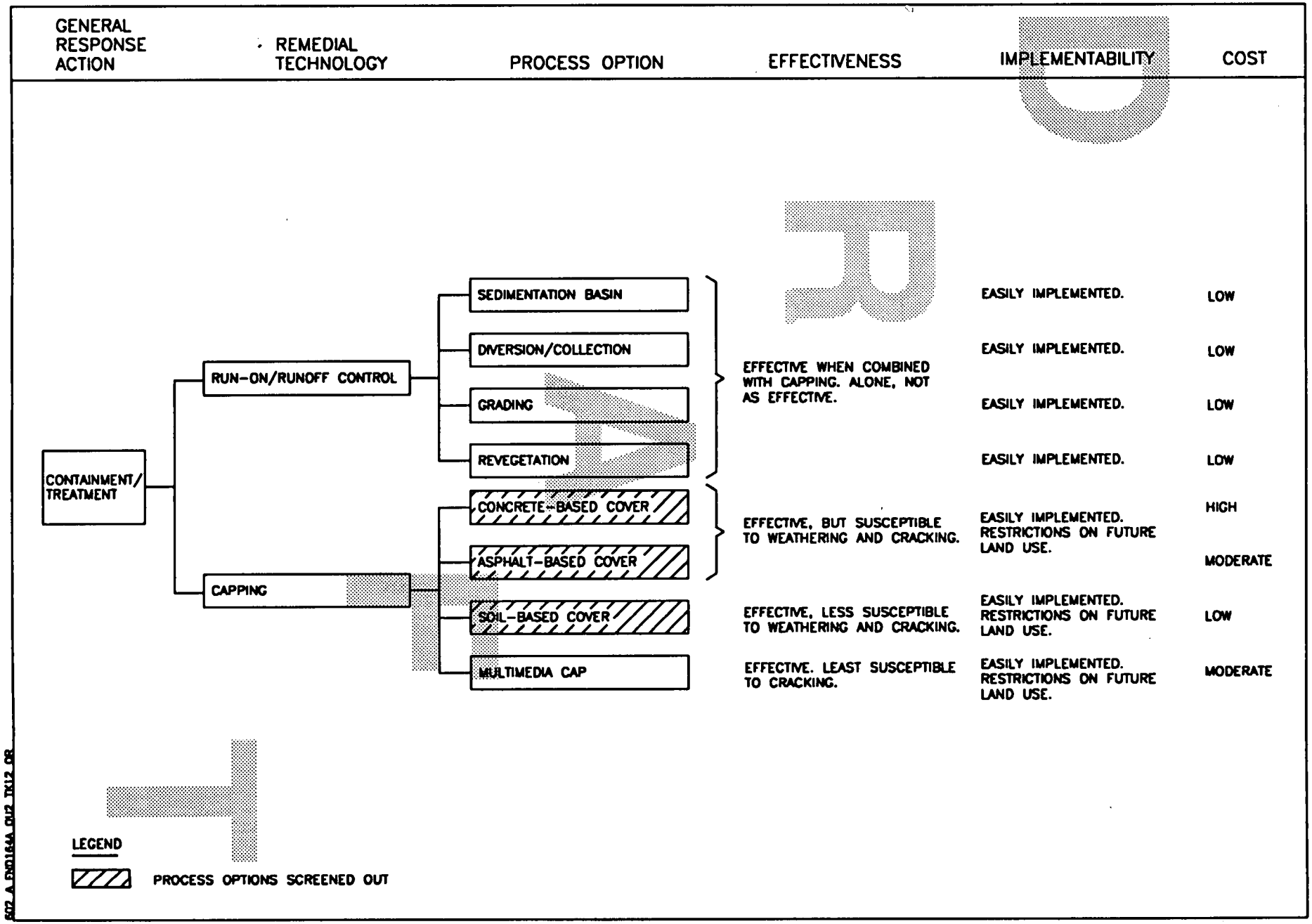

FIGURE 2-5. EVALUATION OF PROCESS OPTIONS – SANITARY LANDFILL (Continued)

GENERAL RESPONSE ACTION	REMEDIAL TECHNOLOGY	PROCESS OPTION	EFFECTIVENESS	IMPLEMENTABILITY	COST
CONTAINMENT/ TREATMENT CONTINUED	SUBSURFACE FLOW CONTROL	INTERCEPTOR TRENCHES	EFFECTIVE	EASILY IMPLEMENTED.	MODERATE
		PUMPING WELLS	EFFECTIVE	EASILY IMPLEMENTED.	MODERATE
		SLURRY WALLS	EFFECTIVE	EASILY IMPLEMENTED.	HIGH
		GROUT CURTAINS	EFFECTIVE	MORE DIFFICULT TO IMPLEMENT THAN SLURRY WALL.	HIGH
	PERCHED GROUNDWATER/ WASTE WATER TREATMENT	SEDIMENTATION	EFFECTIVE. REMOVES SUSPENDED SOLIDS.	EASILY IMPLEMENTED.	MODERATE
		FILTRATION	EFFECTIVE. REMOVES SUSPENDED SOLIDS.	EASILY IMPLEMENTED.	MODERATE
		ION EXCHANGE	EFFECTIVE. REMOVES METAL AND INORGANIC IONS.	EASILY IMPLEMENTED.	HIGH
		REVERSE OSMOSIS	EFFECTIVE. REMOVES DISSOLVED SOLIDS.	EASILY IMPLEMENTED.	HIGH

LEGEND

PROCESS OPTIONS SCREENED OUT

FIGURE 2-5. EVALUATION OF PROCESS OPTIONS – SANITARY LANDFILL (Continued)

GENERAL RESPONSE ACTION	REMEDIAL TECHNOLOGY	PROCESS OPTION	EFFECTIVENESS	IMPLEMENTABILITY	COST
REMOVAL/ TREATMENT/ DISPOSAL	MECHANICAL REMOVAL	LOADER/DOZER	EFFECTIVE FOR REMOVAL OF WASTE WITH LOW MOISTURE CONTENT.	EASILY IMPLEMENTED.	MODERATE
		BACKHOE	EFFECTIVE FOR REMOVAL OF WASTE WITH LOW MOISTURE CONTENT.	EASILY IMPLEMENTED.	MODERATE
		CRANE W/CLAMSHELL SYSTEM	EFFECTIVE FOR REMOVAL OF WASTE WITH LOW MOISTURE CONTENT.	EASILY IMPLEMENTED.	MODERATE
		DRAGLINE	EFFECTIVE FOR REMOVAL OF WASTE WITH LOW MOISTURE CONTENT.	EASILY IMPLEMENTED.	MODERATE
	SEGREGATION	COMPATIBILITY TESTING	EFFECTIVE FOR AN AREA WHICH CONTAINS HAZARDOUS AND RADIOACTIVE WASTE.	EASILY IMPLEMENTED.	MODERATE
		MANUAL SORTING	EFFECTIVE FOR WASTE WHICH CONTAINS NONFERROUS MATERIALS.	EASILY IMPLEMENTED.	MODERATE
		MAGNETIC SORTING	EFFECTIVE FOR WASTE WHICH CONTAINS FERROUS MATERIALS.	EASILY IMPLEMENTED.	MODERATE
		SCREENING/SIZING	EFFECTIVE. SCREENS OUT DEBRIS AND LARGE PARTICLES WHICH REQUIRE CRUSHING BEFORE DISPOSAL.	EASILY IMPLEMENTED.	MODERATE
	ON PROPERTY DISPOSAL	ON PROPERTY ENGINEERED DISPOSAL FACILITY	EFFECTIVE	CAN BE CONSTRUCTED. THE TECHNOLOGY IS AVAILABLE.	MODERATE
	OFF SITE DISPOSAL	TEMPORARY STORAGE	EFFECTIVE	EASILY IMPLEMENTED.	LOW
		RAIL TRANSPORT	EFFECTIVE	READILY IMPLEMENTED.	LOW
		TRUCK TRANSPORT	EFFECTIVE. HIGHER HAZARD POTENTIAL.	READILY IMPLEMENTED.	MODERATE

602_A_FN0183_OU2_TK12_08

FIGURE 2-5. EVALUATION OF PROCESS OPTIONS – SANITARY LANDFILL (Continued)

GENERAL RESPONSE ACTION	REMEDIAL TECHNOLOGY	PROCESS OPTION	EFFECTIVENESS	IMPLEMENTABILITY	COST
REMOVAL/ TREATMENT/ DISPOSAL CONTINUED	SUBSURFACE FLOW CONTROL	INTERCEPTOR TRENCHES	EFFECTIVE	MORE DIFFICULT TO IMPLEMENT THAN WELLS WHEN COUPLED WITH WASTE REMOVAL.	MODERATE
		PUMPING WELLS	EFFECTIVE	EASIER TO IMPLEMENT WHEN COUPLED WITH WASTE REMOVAL.	MODERATE
		SLURRY WALLS	EFFECTIVE	EASILY IMPLEMENTED.	HIGH
		GROUT CURTAINS	EFFECTIVE	MORE DIFFICULT TO IMPLEMENT THAN SLURRY WALL.	HIGH
	PERCHED GROUNDWATER/ WASTE WATER TREATMENT	SEDIMENTATION	EFFECTIVE. REMOVES SUSPENDED SOLIDS.	EASILY IMPLEMENTED.	MODERATE
		FILTRATION	EFFECTIVE. REMOVES SUSPENDED SOLIDS.	EASILY IMPLEMENTED.	MODERATE
		ION EXCHANGE	EFFECTIVE. REMOVES METAL AND INORGANIC IONS.	EASILY IMPLEMENTED.	HIGH
		REVERSE OSMOSIS	EFFECTIVE. REMOVES DISSOLVED SOLIDS.	EASILY IMPLEMENTED.	HIGH

LEGEND

PROCESS OPTIONS SCREENED OUT

602_A_EN0165_OU2_TK12_OR

FIGURE 2-5. EVALUATION OF PROCESS OPTIONS – SANITARY LANDFILL (Continued)

GENERAL RESPONSE ACTION	REMEDIAL TECHNOLOGY	PROCESS OPTION	EFFECTIVENESS	IMPLEMENTABILITY	COST
REMOVAL/ TREATMENT/ DISPOSAL CONTINUED	PHYSICAL TREATMENT	SOIL WASHING	EFFECTIVE. EXTRACTS CONTAMINANTS FROM SOIL.	READILY INPLEMENTED.	HIGH
	THERMAL TREATMENT	ROTARY KILN	EFFECTIVE IN REMOVING CONTAMINANTS FROM SOIL.	READILY INPLEMENTED.	HIGH
		MULTIPLE-HEARTH	EFFECTIVE IN REMOVING CONTAMINANTS FROM SOIL.	READILY INPLEMENTED.	HIGH
		FLUIDIZED-BED	EFFECTIVE IN REMOVING CONTAMINANTS FROM SOIL.	READILY INPLEMENTED.	HIGH
	VOLUME REDUCTION	COMPACTION	EFFECTIVE. WASTE IS EASILY COMPACTED DUE TO MOISTURE CONTENT.	READILY INPLEMENTED.	LOW
		SHREDDING	EFFECTIVE IN TEARING ROOFING MATERIALS FOUND IN THIS WASTE UNIT.	READILY INPLEMENTED.	LOW

FIGURE 2-5. EVALUATION OF PROCESS OPTIONS – SANITARY LANDFILL (Continued)

GENERAL RESPONSE ACTION	REMEDIAL TECHNOLOGY	PROCESS OPTION	EFFECTIVENESS	IMPLEMENTABILITY	COST
NO ACTION	NONE	NOT APPLICABLE	MAY NOT MEET RAO's.	MAY NOT BE ACCEPTABLE TO PUBLIC.	NONE
INSTITUTIONAL ACTIONS	MONITORING	WELLPOINT MONITORING LEACHATE MONITORING	USEFUL IN DOCUMENTING CONDITIONS. DOES NOT REDUCE RISK.	ALONE, MAY NOT BE ACCEPTABLE TO PUBLIC.	LOW
	ACCESS CONTROL	PHYSICAL BARRIERS ADMINISTRATIVE CONTROLS	EFFECTIVENESS DEPENDS ON CONTINUED FUTURE IMPLEMENTATION. DOES NOT REDUCE CONTAMINATION.	ALONE, MAY NOT BE ACCEPTABLE TO PUBLIC.	LOW

FIGURE 2-6. EVALUATION OF PROCESS OPTIONS – LIME SLUDGE PONDS

GENERAL RESPONSE ACTION	REMEDIAL TECHNOLOGY	PROCESS OPTION	EFFECTIVENESS	IMPLEMENTABILITY	COST
CONTAINMENT	RUN-ON/RUNOFF CONTROL	SEDIMENTATION BASIN	EFFECTIVE WHEN COMBINED WITH CAPPING. ALONE, NOT AS EFFECTIVE.	EASILY IMPLEMENTED.	LOW
		DIVERSION/COLLECTION		EASILY IMPLEMENTED.	LOW
		GRADING		EASILY IMPLEMENTED.	LOW
		REVEGETATION		EASILY IMPLEMENTED.	LOW
	CAPPING	CONCRETE-BASED COVER	EFFECTIVE, BUT SUSCEPTIBLE TO WEATHERING AND CRACKING.	EASILY IMPLEMENTED. RESTRICTIONS ON FUTURE LAND USE.	HIGH
		ASPHALT-BASED COVER			MODERATE
		SOIL-BASED COVER	EFFECTIVE, LESS SUSCEPTIBLE TO WEATHERING AND CRACKING.	EASILY IMPLEMENTED. RESTRICTIONS ON FUTURE LAND USE.	LOW
		MULTIMEDIA CAP	EFFECTIVE. LEAST SUSCEPTIBLE TO CRACKING.	EASILY IMPLEMENTED. RESTRICTIONS ON FUTURE LAND USE.	MODERATE
	IN SITU STABILIZATION	GROUT INJECTION	EFFECTIVE	DUSTING HAZARD.	MODERATE
		SHALLOW-SOIL MIXING	EFFECTIVE	EASILY IMPLEMENTED.	MODERATE
		DYNAMIC COMPACTION/ VACUUM EXTRACTION	LESS EFFECTIVE THAN ADDITION OF STABILIZING AGENTS; SAND LENSE MAY INTERSECT LIME SLUDGE PONDS RESULTING IN RECHARGE OF LIQUID IN WASTE UNIT.	EASILY IMPLEMENTED.	LOW
		SURCHARGING		EASILY IMPLEMENTED.	LOW

LEGEND

PROCESS OPTIONS SCREENED OUT

FIGURE 2-6. EVALUATION OF PROCESS OPTIONS - LIME SLUDGE PONDS (Continued)

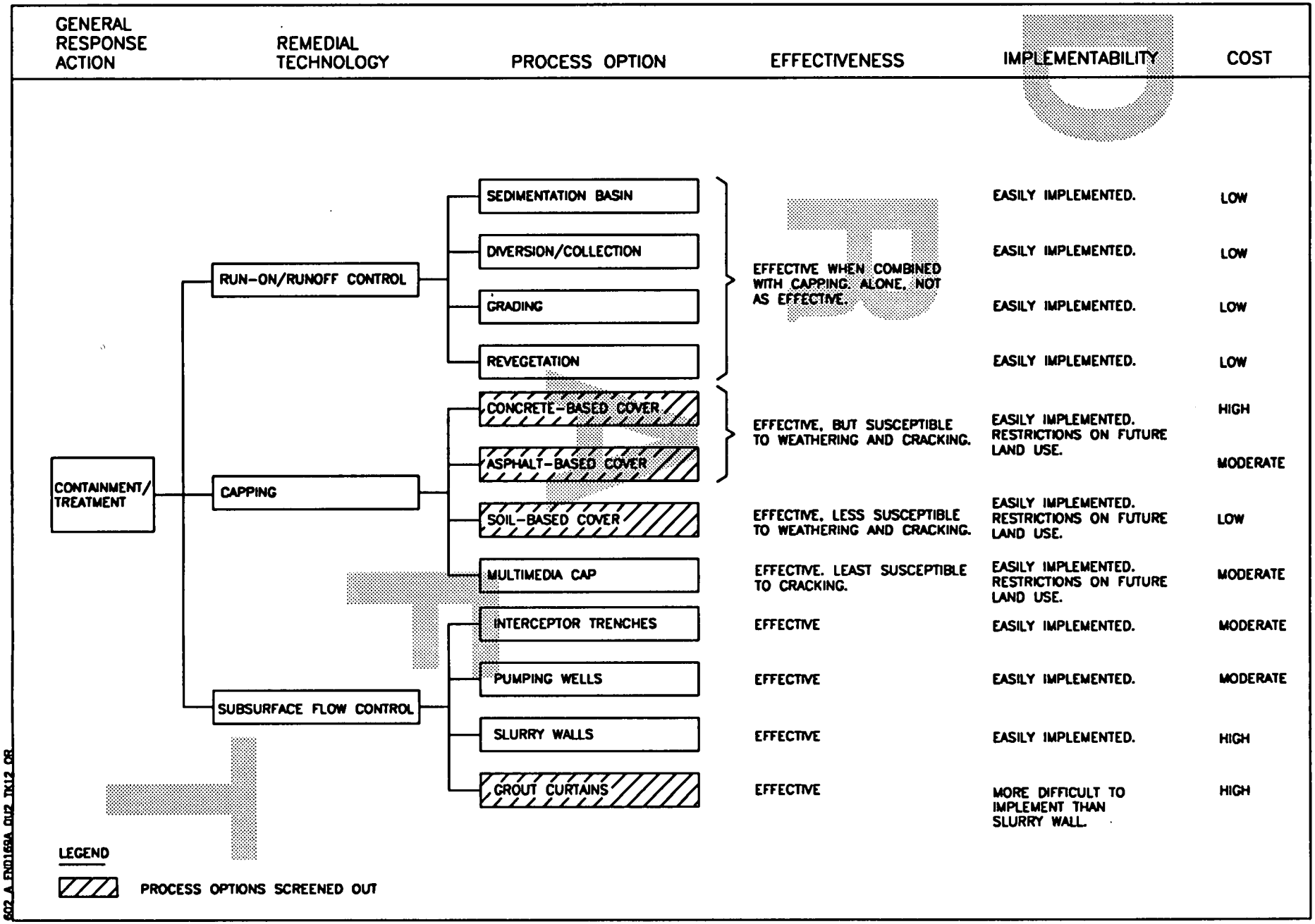

FIGURE 2-6. EVALUATION OF PROCESS OPTIONS - LIME SLUDGE PONDS (Continued)

GENERAL RESPONSE ACTION	REMEDIAL TECHNOLOGY	PROCESS OPTION	EFFECTIVENESS	IMPLEMENTABILITY	COST
CONTAINMENT/ TREATMENT CONTINUED	IN SITU STABILIZATION	GROUT INJECTION	EFFECTIVE	DUSTING HAZARD.	MODERATE
		SHALLOW-SOIL MIXING	EFFECTIVE	EASILY IMPLEMENTED.	MODERATE
		DYNAMIC COMPACTION/ VACUUM EXTRACTION	LESS EFFECTIVE THAN ADDITION OF STABILIZING AGENTS; SAND LENSE MAY INTERSECT LIME SLUDGE PONDS RESULTING IN RECHARGE OF LIQUID IN WASTE UNIT.	EASILY IMPLEMENTED.	LOW
		SURCHARGING		EASILY IMPLEMENTED.	LOW
	PERCHED GROUNDWATER/ WASTE WATER TREATMENT	SEDIMENTATION	EFFECTIVE. REMOVES SUSPENDED SOLIDS.	EASILY IMPLEMENTED.	MODERATE
		FILTRATION	EFFECTIVE. REMOVES SUSPENDED SOLIDS.	EASILY IMPLEMENTED.	MODERATE
		ION EXCHANGE	EFFECTIVE. REMOVES METAL AND INORGANIC IONS.	EASILY IMPLEMENTED.	HIGH
		REVERSE OSMOSIS	EFFECTIVE. REMOVES DISSOLVED SOLIDS.	EASILY IMPLEMENTED.	HIGH

LEGEND

PROCESS OPTIONS SCREENED OUT

FIGURE 2-6. EVALUATION OF PROCESS OPTIONS – LIME SLUDGE PONDS (Continued)

GENERAL RESPONSE ACTION	REMEDIAL TECHNOLOGY	PROCESS OPTION	EFFECTIVENESS	IMPLEMENTABILITY	COST
REMOVAL/ TREATMENT/ DISPOSAL	MECHANICAL REMOVAL	LOADER/DOZER	EFFECTIVE FOR REMOVAL OF WASTE WITH LOW MOISTURE CONTENT.	EASILY IMPLEMENTED.	MODERATE
		BACKHOE	EFFECTIVE FOR REMOVAL OF WASTE WITH LOW MOISTURE CONTENT.	EASILY IMPLEMENTED.	MODERATE
		CRANE W/CLAMSHELL SYSTEM	EFFECTIVE FOR REMOVAL OF WASTE WITH LOW MOISTURE CONTENT.	EASILY IMPLEMENTED.	MODERATE
		DRAGLINE	EFFECTIVE FOR REMOVAL OF WASTE WITH LOW MOISTURE CONTENT.	EASILY IMPLEMENTED.	MODERATE
	HYDRAULIC REMOVAL	JETTING RING W/CUTTERHEAD	EFFECTIVE FOR REMOVAL OF LOW-SOLID SLUDGE.	EASILY IMPLEMENTED.	MODERATE
	SLUDGE TREATMENT	STABILIZATION/SOLIDIFICATION	EFFECTIVE. HIGH POTENTIAL OF IMMOBILIZING CONTAMINANTS.	EASILY IMPLEMENTED.	MODERATE
		DEWATERING	EFFECTIVE. PROVIDES A HIGH-SOLIDS SLUDGE.	EASILY IMPLEMENTED.	MODERATE
		DRYING	EFFECTIVE	EASILY IMPLEMENTED.	MODERATE
	ON PROPERTY DISPOSAL	ON PROPERTY ENGINEERED DISPOSAL FACILITY	EFFECTIVE	CAN BE CONSTRUCTED. THE TECHNOLOGY IS AVAILABLE.	MODERATE
	OFF SITE DISPOSAL	TEMPORARY STORAGE	EFFECTIVE	EASILY IMPLEMENTED.	LOW
		RAIL TRANSPORT	EFFECTIVE	READILY IMPLEMENTED.	LOW
		TRUCK TRANSPORT	EFFECTIVE. HIGHER HAZARD POTENTIAL.	READILY IMPLEMENTED.	MODERATE

602_A_EN0170_QU2_TK12_OR

FIGURE 2-6. EVALUATION OF PROCESS OPTIONS – LIME SLUDGE PONDS (Continued)

GENERAL RESPONSE ACTION	REMEDIAL TECHNOLOGY	PROCESS OPTION	EFFECTIVENESS	IMPLEMENTABILITY	COST
REMOVAL/ TREATMENT/ DISPOSAL CONTINUED	SUBSURFACE FLOW CONTROL	INTERCEPTOR TRENCHES	EFFECTIVE	MORE DIFFICULT TO IMPLEMENT THAN WELLS WHEN COUPLED WITH WASTE REMOVAL.	MODERATE
		PUMPING WELLS	EFFECTIVE	EASIER TO IMPLEMENT WHEN COUPLED WITH WASTE REMOVAL.	MODERATE
		SLURRY WALLS	EFFECTIVE	EASILY IMPLEMENTED.	HIGH
		GROUT CURTAINS	EFFECTIVE	MORE DIFFICULT TO IMPLEMENT THAN SLURRY WALL.	HIGH
	PERCHED GROUNDWATER/ WASTE WATER TREATMENT	SEDIMENTATION	EFFECTIVE. REMOVES SUSPENDED SOLIDS.	EASILY IMPLEMENTED.	MODERATE
		FILTRATION	EFFECTIVE. REMOVES SUSPENDED SOLIDS.	EASILY IMPLEMENTED.	MODERATE
		ION EXCHANGE	EFFECTIVE. REMOVES METAL AND INORGANIC IONS.	EASILY IMPLEMENTED.	HIGH
		REVERSE OSMOSIS	EFFECTIVE. REMOVES DISSOLVED SOLIDS.	EASILY IMPLEMENTED.	HIGH

LEGEND

PROCESS OPTIONS SCREENED OUT

FIGURE 2-6. EVALUATION OF PROCESS OPTIONS - LIME SLUDGE PONDS (Continued)

GENERAL RESPONSE ACTION	REMEDIAL TECHNOLOGY	PROCESS OPTION	EFFECTIVENESS	IMPLEMENTABILITY	COST
REMOVAL/ TREATMENT/ DISPOSAL CONTINUED	PHYSICAL TREATMENT	SOLID/LIQUID SEPARATION	EFFECTIVE	READILY IMPLEMENTED.	HIGH

DRAFT

FIGURE 2-6. EVALUATION OF PROCESS OPTIONS - LIME SLUDGE PONDS (Continued)

GENERAL RESPONSE ACTION	REMEDIAL TECHNOLOGY	PROCESS OPTION	EFFECTIVENESS	IMPLEMENTABILITY	COST
NO ACTION	NONE	NOT APPLICABLE	MAY NOT MEET RAO's.	MAY NOT BE ACCEPTABLE TO PUBLIC.	NONE
INSTITUTIONAL ACTIONS	MONITORING	WELLPOINT MONITORING	USEFUL IN DOCUMENTING CONDITIONS. DOES NOT REDUCE RISK.	ALONE, MAY NOT BE ACCEPTABLE TO PUBLIC.	LOW
		LEACHATE MONITORING			
	ACCESS CONTROL	PHYSICAL BARRIERS	EFFECTIVENESS DEPENDS ON CONTINUED FUTURE IMPLEMENTATION. DOES NOT REDUCE CONTAMINATION.	ALONE, MAY NOT BE ACCEPTABLE TO PUBLIC.	LOW
		ADMINISTRATIVE CONTROLS			
CONTAINMENT	RUN-ON/RUNOFF CONTROL	SEDIMENTATION BASIN	EFFECTIVE WHEN COMBINED WITH CAPPING. ALONE, NOT AS EFFECTIVE.	EASILY IMPLEMENTED.	LOW
		DIVERSION/COLLECTION		EASILY IMPLEMENTED.	LOW
		GRADING		EASILY IMPLEMENTED.	LOW
		REVEGETATION		EASILY IMPLEMENTED.	LOW
	CAPPING	CONCRETE-BASED COVER	EFFECTIVE, BUT SUSCEPTIBLE TO WEATHERING AND CRACKING.	EASILY IMPLEMENTED. RESTRICTIONS ON FUTURE LAND USE.	HIGH
		ASPHALT-BASED COVER			MODERATE
		SOIL-BASED COVER	EFFECTIVE, LESS SUSCEPTIBLE TO WEATHERING AND CRACKING.	EASILY IMPLEMENTED. RESTRICTIONS ON FUTURE LAND USE.	LOW
		MULTIMEDIA CAP	EFFECTIVE. LEAST SUSCEPTIBLE TO CRACKING.	EASILY IMPLEMENTED. RESTRICTIONS ON FUTURE LAND USE.	MODERATE

LEGEND

PROCESS OPTIONS SCREENED OUT

FIGURE 2-7. EVALUATION OF PROCESS OPTIONS - SOUTHFIELD/FLY ASH AREAS

GENERAL RESPONSE ACTION	REMEDIAL TECHNOLOGY	PROCESS OPTION	EFFECTIVENESS	IMPLEMENTABILITY	COST
CONTAINMENT/ TREATMENT	RUN-ON/RUNOFF CONTROL	SEDIMENTATION BASIN	EFFECTIVE WHEN COMBINED WITH CAPPING. ALONE, NOT AS EFFECTIVE.	EASILY IMPLEMENTED.	LOW
		DIVERSION/COLLECTION		EASILY IMPLEMENTED.	LOW
		GRADING		EASILY IMPLEMENTED.	LOW
		REVEGETATION		EASILY IMPLEMENTED.	LOW
	CAPPING	CONCRETE-BASED COVER	EFFECTIVE, BUT SUSCEPTIBLE TO WEATHERING AND CRACKING.	EASILY IMPLEMENTED. RESTRICTIONS ON FUTURE LAND USE.	HIGH
		ASPHALT-BASED COVER			MODERATE
		SOIL-BASED COVER	EFFECTIVE, LESS SUSCEPTIBLE TO WEATHERING AND CRACKING.	EASILY IMPLEMENTED. RESTRICTIONS ON FUTURE LAND USE.	LOW
		MULTIMEDIA CAP	EFFECTIVE. LEAST SUSCEPTIBLE TO CRACKING.	EASILY IMPLEMENTED. RESTRICTIONS ON FUTURE LAND USE.	MODERATE
	SUBSURFACE FLOW CONTROL	INTERCEPTOR TRENCHES	EFFECTIVE	EASILY IMPLEMENTED.	MODERATE
		PUMPING WELLS	EFFECTIVE	EASILY IMPLEMENTED.	MODERATE
		SLURRY WALLS	EFFECTIVE	EASILY IMPLEMENTED.	HIGH
		GROUT CURTAINS	EFFECTIVE	MORE DIFFICULT TO IMPLEMENT THAN SLURRY WALL.	HIGH

LEGEND

PROCESS OPTIONS SCREENED OUT

FIGURE 2-7. EVALUATION OF PROCESS OPTIONS - SOUTHFIELD/FLY ASH AREA (Continued)

GENERAL RESPONSE ACTION	REMEDIAL TECHNOLOGY	PROCESS OPTION	EFFECTIVENESS	IMPLEMENTABILITY	COST
CONTAINMENT/ TREATMENT CONTINUED	PERCHED GROUNDWATER/ WASTE WATER TREATMENT	SEDIMENTATION	EFFECTIVE. REMOVES SUSPENDED SOLIDS.	EASILY IMPLEMENTED.	MODERATE
		FILTRATION	EFFECTIVE. REMOVES SUSPENDED SOLIDS.	EASILY IMPLEMENTED.	MODERATE
		ION EXCHANGE	EFFECTIVE. REMOVES METAL AND INORGANIC IONS.	EASILY IMPLEMENTED.	HIGH
		REVERSE OSMOSIS	EFFECTIVE. REMOVES DISSOLVED SOLIDS.	EASILY IMPLEMENTED.	HIGH

602_A_FN01748_OU2_TK12_OR

FIGURE 2-7. EVALUATION OF PROCESS OPTIONS - SOUTHFIELD/FLY ASH AREAS (Continued)

GENERAL RESPONSE ACTION	REMEDIAL TECHNOLOGY	PROCESS OPTION	EFFECTIVENESS	IMPLEMENTABILITY	COST
REMOVAL/ TREATMENT/ DISPOSAL	MECHANICAL REMOVAL	LOADER/DOZER	EFFECTIVE FOR REMOVAL OF WASTE WITH LOW MOISTURE CONTENT.	EASILY IMPLEMENTED.	MODERATE
		BACKHOE	EFFECTIVE FOR REMOVAL OF WASTE WITH LOW MOISTURE CONTENT.	EASILY IMPLEMENTED.	MODERATE
		CRANE W/CLAMSHELL SYSTEM	EFFECTIVE FOR REMOVAL OF WASTE WITH LOW MOISTURE CONTENT.	EASILY IMPLEMENTED.	MODERATE
		DRAGLINE	EFFECTIVE FOR REMOVAL OF WASTE WITH LOW MOISTURE CONTENT.	EASILY IMPLEMENTED.	MODERATE
	SEGREGATION	MANUAL SORTING	EFFECTIVE FOR WASTE WHICH CONTAINS NONFERROUS MATERIALS.	EASILY IMPLEMENTED.	MODERATE
		MAGNETIC SORTING	EFFECTIVE FOR WASTE WHICH CONTAINS FERROUS MATERIALS.	EASILY IMPLEMENTED.	MODERATE
		SCREENING/SIZING	EFFECTIVE. SCREENS OUT DEBRIS AND LARGE PARTICLES WHICH REQUIRE CRUSHING BEFORE DISPOSAL.	EASILY IMPLEMENTED.	MODERATE
	ON PROPERTY DISPOSAL	ON PROPERTY ENGINEERED DISPOSAL FACILITY	EFFECTIVE	CAN BE CONSTRUCTED. THE TECHNOLOGY IS AVAILABLE.	MODERATE
	OFF SITE DISPOSAL	TEMPORARY STORAGE	EFFECTIVE	EASILY IMPLEMENTED.	LOW
		RAIL TRANSPORT	EFFECTIVE	READILY IMPLEMENTED.	LOW
		TRUCK TRANSPORT	EFFECTIVE. HIGHER HAZARD POTENTIAL.	READILY IMPLEMENTED.	MODERATE

FIGURE 2-7. EVALUATION OF PROCESS OPTIONS - SOUTHFIELD/FLY ASH AREAS (Continued)

GENERAL RESPONSE ACTION	REMEDIAL TECHNOLOGY	PROCESS OPTION	EFFECTIVENESS	IMPLEMENTABILITY	COST
REMOVAL/ TREATMENT/ DISPOSAL CONTINUED	SUBSURFACE FLOW CONTROL	INTERCEPTOR TRENCHES	EFFECTIVE	MORE DIFFICULT TO IMPLEMENT THAN WELLS WHEN COUPLED WITH WASTE REMOVAL.	MODERATE
		PUMPING WELLS	EFFECTIVE	EASIER TO IMPLEMENT WHEN COUPLED WITH WASTE REMOVAL.	MODERATE
		SLURRY WALLS	EFFECTIVE	EASILY IMPLEMENTED.	HIGH
		GROUT CURTAINS	EFFECTIVE	MORE DIFFICULT TO IMPLEMENT THAN SLURRY WALL.	HIGH
	PERCHED GROUNDWATER/ WASTE WATER TREATMENT	SEDIMENTATION	EFFECTIVE. REMOVES SUSPENDED SOLIDS.	EASILY IMPLEMENTED.	MODERATE
		FILTRATION	EFFECTIVE. REMOVES SUSPENDED SOLIDS.	EASILY IMPLEMENTED.	MODERATE
		ION EXCHANGE	EFFECTIVE. REMOVES METAL AND INORGANIC IONS.	EASILY IMPLEMENTED.	HIGH
		REVERSE OSMOSIS	EFFECTIVE. REMOVES DISSOLVED SOLIDS.	EASILY IMPLEMENTED.	HIGH

LEGEND

PROCESS OPTIONS SCREENED OUT

FIGURE 2-7. EVALUATION OF PROCESS OPTIONS - SOUTHFIELD/FLY ASH AREAS (Continued)

GENERAL RESPONSE ACTION	REMEDIAL TECHNOLOGY	PROCESS OPTION	EFFECTIVENESS	IMPLEMENTABILITY	COST
REMOVAL/ TREATMENT/ DISPOSAL CONTINUED	VOLUME REDUCTION	COMPACTION	EFFECTIVE. WASTE FORM IS COMPACTIBLE.	READILY IMPLEMENTED.	LOW
		SHREDDING	EFFECTIVE. WASTE CONTAINS MATERIALS WHICH REQUIRE SHREDDING PRIOR TO DISPOSAL.	READILY IMPLEMENTED.	LOW

602 A EN0177 OU2 TK12 OR

FIGURE 2-7. EVALUATION OF PROCESS OPTIONS – SOUTHFIELD/FLY ASH AREAS (Continued)

556

3.0

3.0 DEVELOPMENT OF ALTERNATIVES

3.1 DESCRIPTION OF ALTERNATIVES

Tables 3-1 through 3-3 show the combining of general response actions into alternatives for the Sanitary Landfill, Lime Sludge Ponds, and Southfield/Fly Ash Areas.

Six potential remedial action alternatives have been developed for the solid waste disposal units comprising Operable Unit 2. In addition to the no-action alternative, three nonremoval alternatives and two removal alternatives remain for further evaluation. The following sections discuss the alternatives developed for Operable Unit 2 waste areas in greater detail. The alphanumeric designation for each alternative is provided for purposes of cross-referencing the alternatives to those described in the Development of Alternatives Report (ASI/IT 1988). Volumes and areas are refined to detail sufficient for screening.

3.1.1 Alternative 0: Nonremoval - No Action

This alternative involves no implementation of corrective action for the solid waste units; however, ongoing water quality monitoring would continue to be performed, and site access restrictions would remain in place. This alternative is retained throughout the FS as a no-action alternative and for comparison with other alternatives.

3.1.2 Alternative 1 (2-NA-A): - Nonremoval Cap

The first nonremoval alternative represents a minimum-action scenario that is intended to isolate the wastes and to minimize the vertical infiltration of rainfall/runoff into and through the solid wastes. A flow chart for this alternative is depicted on Figure 3-1 and consists of in situ stabilization and/or consolidation for the Lime Sludge Ponds and capping and surface-water-runoff/run-on control for all Operable Unit 2 solid waste units.

In situ stabilization can be accomplished using a technique known as shallow soil mixing (SSM). SSM is a method of mixing soils or sludges with dry or fluid treatment chemicals to produce a solidified or stabilized end product. SSM is designed to provide in-place mixing of ponds, pits, and lagoons up a depth of up to 30 feet using a crane-mounted mixing system. The mixing head is enclosed in a open-bottomed cylinder that allows a closed system for the mixing of waste and

556

TABLE 3-1

DEVELOPMENT OF ALTERNATIVES
SANITARY LANDFILL

	GENERAL RESPONSE ACTIONS					
TECHNOLOGY TYPE	Alt. 0	Alt. 1	Alt. 2	Alt. 3	Alt. 4	Alt. 5
	No Action	Containment	Containment Treatment (Wellpoint Extraction)	Containment Treatment (Inteceptor Trench)	Removal Treatment On Property Disposal	Removal Treatment Off Site Disposal
Access Restrictions	●	●	●	●	●	
Monitoring	●	●	●	●	●	
Runoff Control		●	●	●		
Capping		●	●	●		
Insitu Stabilization						
Subsurface Flow Control			●	●	●	●
Perched Groundwater Wastewater Treatment			●	●	●	●
Physical Treatment					●	●
Thermal Treatment					●	●
Volume Reduction					●	●
Mechanical Removal					●	●
Hydraulic Removal						
Sludge Treatment						
Segregation					●	●
On Property Disposal					●	
Off Site Disposal						●

DRAFT

TABLE 3-2

DEVELOPMENT OF ALTERNATIVES
LIME SLUDGE PONDS

	GENERAL RESPONSE ACTIONS					
TECHNOLOGY TYPE	Alt. 0	Alt. 1	Alt. 2	Alt. 3	Alt. 4	Alt. 5
	No Action	Containment	Containment Treatment (Wellpoint Extraction)	Containment Treatment (Inteceptor Trench)	Removal Treatment On-Property Disposal	Removal Treatment Off-Site Disposal
Access Restrictions	●	●	●	●	●	
Monitoring	●	●	●	●	●	
Runoff Control		●	●	●		
Capping		●	●	●		
In situ Stabilization		●	●	●		
Subsurface Flow Control			●	●	●	●
Perched Groundwater Wastewater Treatment			●	●	●	●
Physical Treatment					●	●
Thermal Treatment						
Volume Reduction						
Mechanical Removal					●	●
Hydraulic Removal					●	●
Sludge Treatment					●	●
Segregation						
On-Property Disposal					●	
Off-Site Disposal						●

DRAFT

556

TABLE 3-3

DEVELOPMENT OF ALTERNATIVES
SOUTHFIELD/FLY ASH AREA

FMPC-0212-4
September 28, 1990

TECHNOLOGY TYPE	GENERAL RESPONSE ACTIONS					
	Alt. 0	Alt. 1	Alt. 2	Alt. 3	Alt. 4	Alt. 5
	No Action	Containment	Containment Treatment (Wellpoint Extraction)	Containment Treatment (Inteceptor Trench)	Removal Treatment On-Property Disposal	Removal Treatment Off-Site Disposal
Access Restrictions	●	●	●	●	●	
Monitoring	●	●	●	●	●	
Runoff Control		●	●	●		
Capping		●	●	●		
In situ Stabilization						
Subsurface Flow Control			●	●	●	●
Perched Groundwater Wastewater Treatment			●	●	●	●
Physical Treatment						
Thermal Treatment						
Volume Reduction					●	●
Mechanical Removal					●	●
Hydraulic Removal						
Sludge Treatment						
Segregation					●	●
On-Property Disposal					●	
Off-Site Disposal						●

DRAFT

OPERABLE UNIT 2

NONREMOVAL – CAP

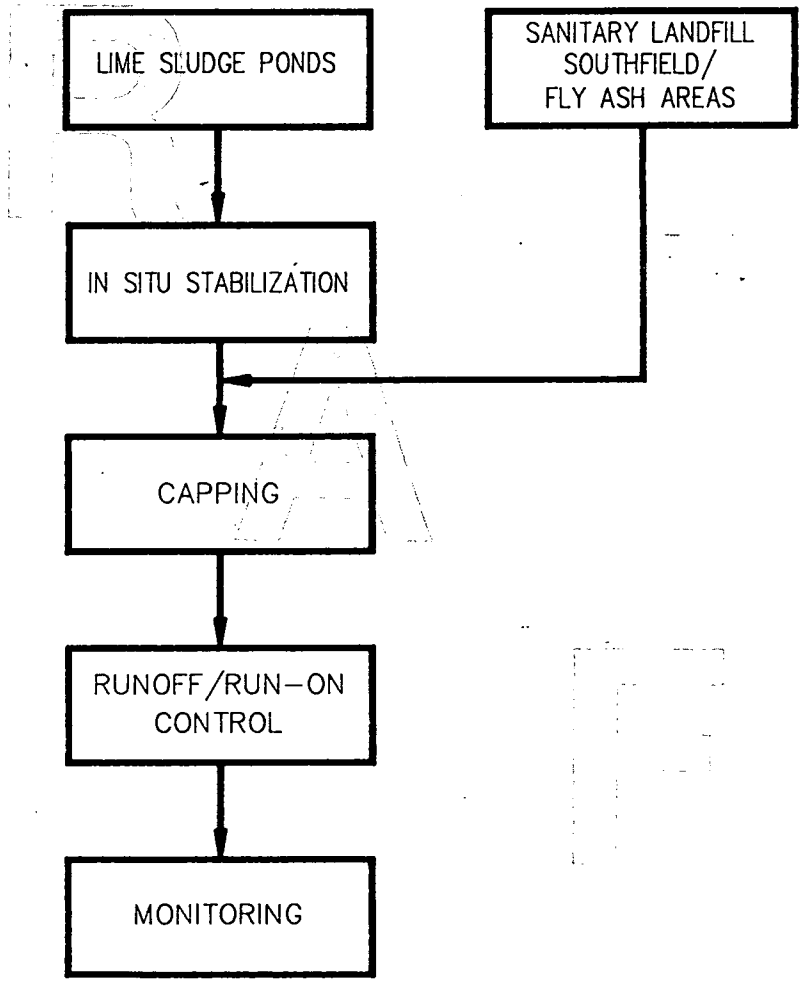

602_A_FND145_OU2_TK12_OR

FIGURE 3–1. REMEDIAL ACTION ALTERNATIVE 1 (2–NA–A)

treatment chemicals. As the mixing head blades pass in an up-and-down motion through the waste, a negetative pressure is maintained on the cylinder headspace to pull any vapors or dust to an air treatment system.

The waste areas would be contour graded with clean and compacted fill to provide drainage prior to cap placement. The cap would consist of a vegetation cover, a natural or synthetic drainage layer, a flexible membrane liner, and a low-permeability clay liner. All cap elements and layers would be contoured to grades that promote drainage while minimizing the effects of waste subsidence and storm-water erosion. Runoff control features would safely remove storm water from the waste area while run-on control features would direct storm water away from the closed area. Runoff/run-on control would be accomplished using one or more of the following: site contour grading; vegetation; diversion; collection; scales; ditches; and various physical devices including weirs, baffles, and lined sedimentation basins.

An alternative to the capping sequence described previously would be the inclusion of a biointrusion barrier between the vegetation cover and drainage layer. This barrier can consist of a two-foot-thick layer of cobbles and is designed to preclude deep rooting plants and burrowing animals from damaging the flexible membrane liner and the low-permeability clay liner. A filter layer should be placed on top of the biointrusion barrier to limit soil from migrating into this layer and reducing performance.

3.1.2.1 System Requirements

Figures 3-2, 3-3 and 3-4 depict the implementation of this alternative. All solid waste units would require some regrading prior to construction of a cap. The Sanitary Landfill and Lime Sludge Ponds are relatively flat, so only minor grading would be required; however, the Lime Sludge Ponds contain standing water that would have to be removed prior to cap placement. To minimize future erosion, the Fly Ash and Southfield areas would require new slopes not to exceed 20 percent (a ratio of 5 horizontal:1 vertical). Slopes in these areas, such as the slopes north and east of the running track/firing range, currently exceed 20 percent.

All solid waste units would require control of runoff and sediment during cap construction. The existing drainage north of the Sanitary Landfill would require realignment; a temporary sedimentation pond could be constructed as shown in Figure 3-2. The area surrounding the Lime Sludge Ponds could also be regraded to direct surface water runoff into a sedimentation basin as depicted on Figure 3-3.

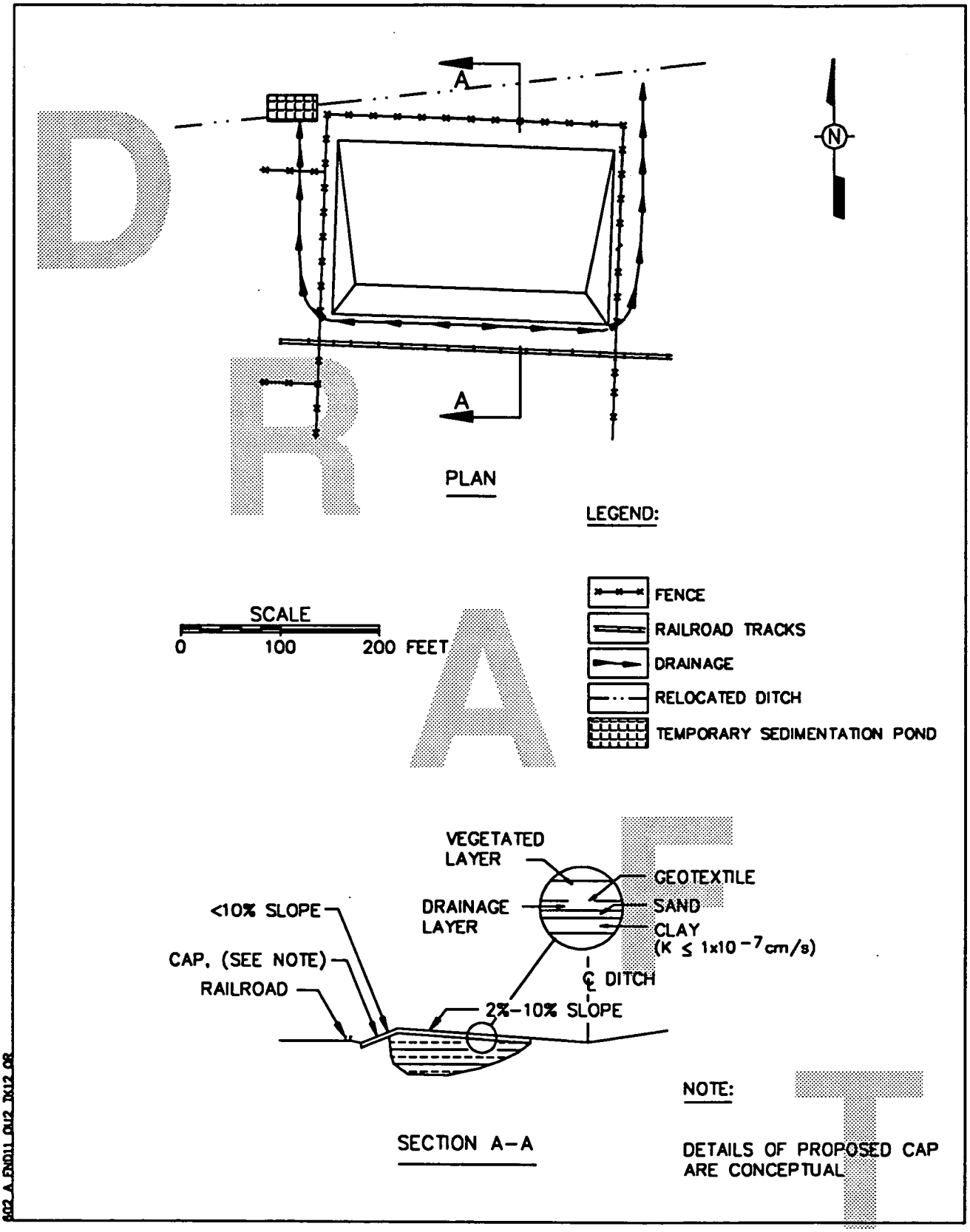

FIGURE 3-2. SANITARY LANDFILL WITH CAP - ALTERNATIVE 1

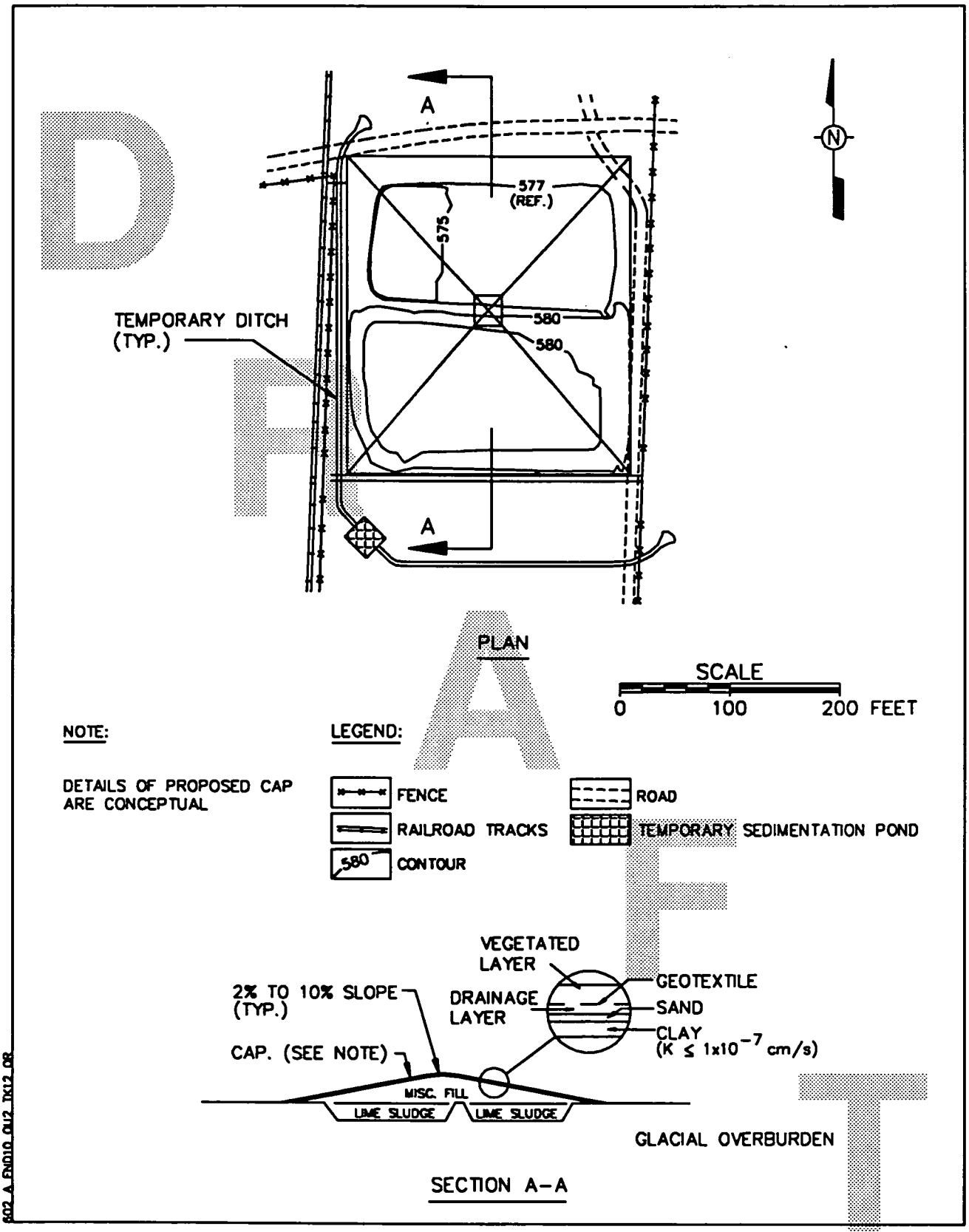

FIGURE 3-3. LIME SLUDGE PONDS - ALTERNATIVE 1

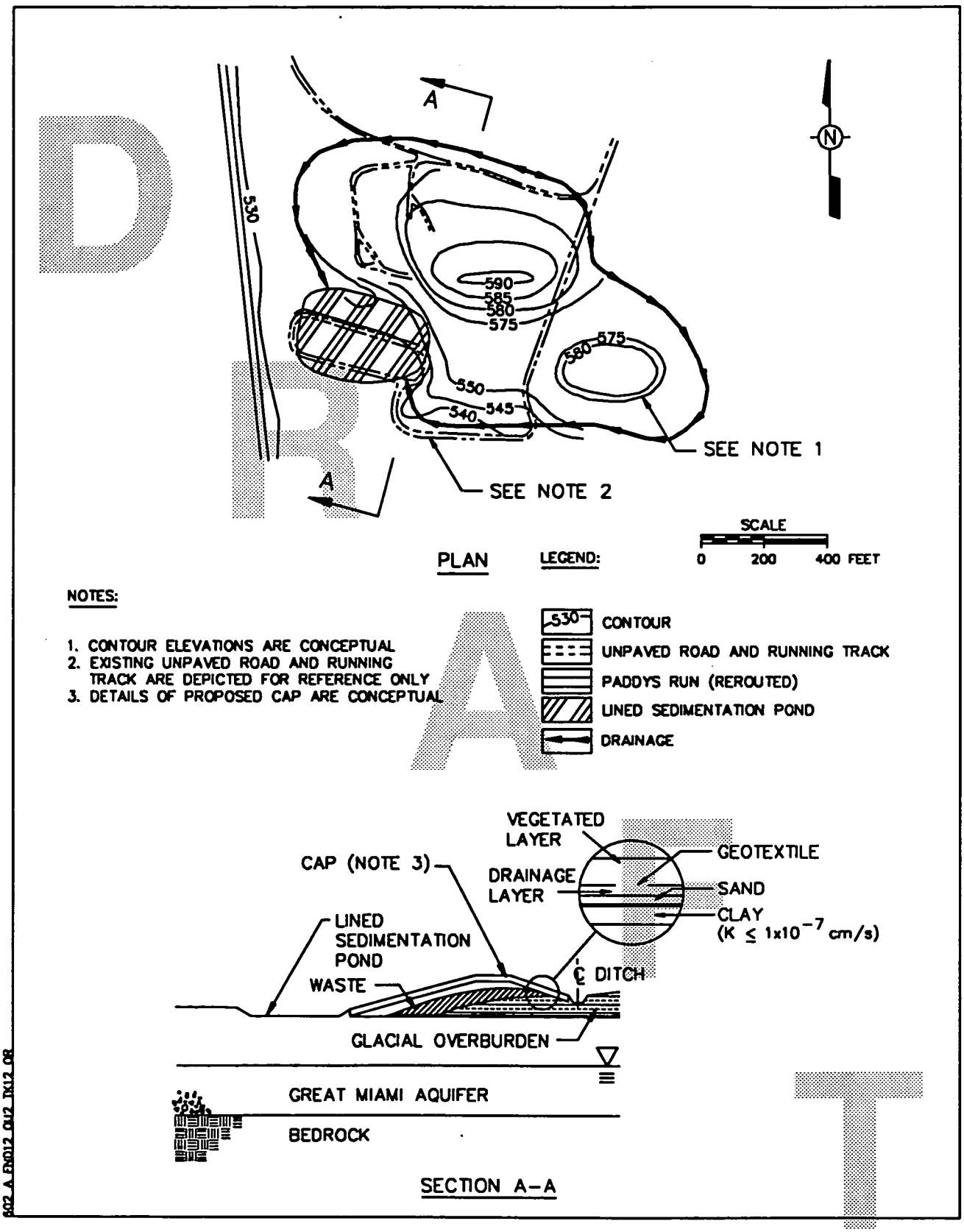

FIGURE 3-4. SOUTHFIELD – ALTERNATIVE 1

The Active Fly Ash Pile, the Inactive Fly Ash Disposal Area, and the Southfield require construction of ditches and lined sedimentation basins to capture runoff and sediment migration. A single cap for the Inactive Fly Ash Disposal and Southfield areas, as well as a single cap for the Active Fly Ash Pile, coupled with a common run-off system, could be constructed as depicted in Figure 3-4. Combining these areas under two caps provides an area in which the material could be regraded so that a maximum slope of 20 percent could be achieved, which would reduce cap erosion. An additional consideration for the Fly Ash/Southfield areas is their location between Paddys Run and the storm sewer outfall ditch. Construction of a cap would require realigning of both of these drainageways to prevent future erosion into the cap.

3.1.2.2 Size and Configuration

The Sanitary Landfill area is estimated to be 1.1 acres. A fence bounds the area on three sides and a railroad track on the fourth. The Lime Sludge Ponds encompass an area approximately 300 feet by 300 feet (approximately 2 acres) and are located just to the west of the production area. The Fly Ash/Southfield areas encompass approximately 16 acres. Unpaved construction roads bound the Southfield on the east and north sides, while the running track/firing range area forms the boundary on the south.

3.1.2.3 Remediation Time Frame

It is expected that these actions could take up to two years to implement. This time frame anticipates time lost for rain delays and cold weather, and possible delays caused by addressing the environmental impacts associated with re-routing on-site drainage pathways. Additional time may be required to complete remediation of the Lime Sludge Ponds, depending on the method of consolidation or stabilization used. Rerouting of on-site drainage pathways will also be addressed in Operable Unit 5. It is included in this discussion of Operable Unit 2 because construction of caps and berms may require the relocation of these drainageways in order to provide long-term cap life.

3.1.2.4 Spatial Requirements

No major problems are foreseen at this time. Open space surrounds all of these solid-waste units, so mobilization of equipment should pose no problems. It is probable that space requirements would need to be coordinated with the remediation of other operable units. Realignment of Paddys Run and the storm sewer outfall ditch may be required to minimize future erosion of the cap.

3.1.2.5 Packaging/Transportation Requirements

There are no transportation requirements for the waste itself since all waste would remain in place and on property. Those low-level radioactive wastes generated as a result of construction activities would be considered low-specific activity (LSA) material and, if shipped off site, would be packaged in accordance with applicable portions of 49CFR173. The actual packaging used for transport and disposal of the low-level radioactive material should be watertight, certified for transport as LSA material (i.e., it should meet U.S. Department of Transportation [DOT] packaging requirements), and of suitable size. Any low-level radioactive waste generated as a result of construction activities could be disposed of on property. Any on-site transportation of construction-generated wastes would be in accordance with the requirements set forth in DOE Order 5480.3a (Draft).

3.1.2.6 Wastes Generated

Construction activities would generate ordinary sanitary (solid) waste and low-level radioactive waste in the form of contaminated clothing, tools, and equipment.

3.1.2.7 Permits Required

CERCLA exempts on-site activities from permit requirements. However, CERCLA necessitates compliance with substantive requirements of ARARs, so ARARs should be included in decision documentation used for site remediation. Proposed ARARs are contained in Appendix A of this report. This will be addressed in greater detail in the next FS task, the Detailed Analysis of Alternatives.

3.1.3 Alternative 2 (2-NA-B): Nonremoval - Slurry Wall, Groundwater Pump and Treatment, and Cap

The second nonremoval alternative is an extension of Alternative 1 and provides for a more proactive approach to leachate control. A flow chart for this alternative is depicted on Figure 3-5 and consists of subsurface flow control, treatment of groundwater, stabilization and/or solidification, capping, and surface water runoff/run-on control. Subsurface flow control for this alternative would be the placement of a hanging slurry wall that can extend partially or fully around the solid waste units. Figure 3-5 shows a well and wellpoint system that surrounds the Sanitary Landfill and Lime Sludge Ponds while extending only partially around the Fly Ash/Southfield areas. Wells would be placed in the glacial overburden to extract perched water contained in sand lenses, which may be present in the vicinity of Operable Unit 2 solid waste sites.

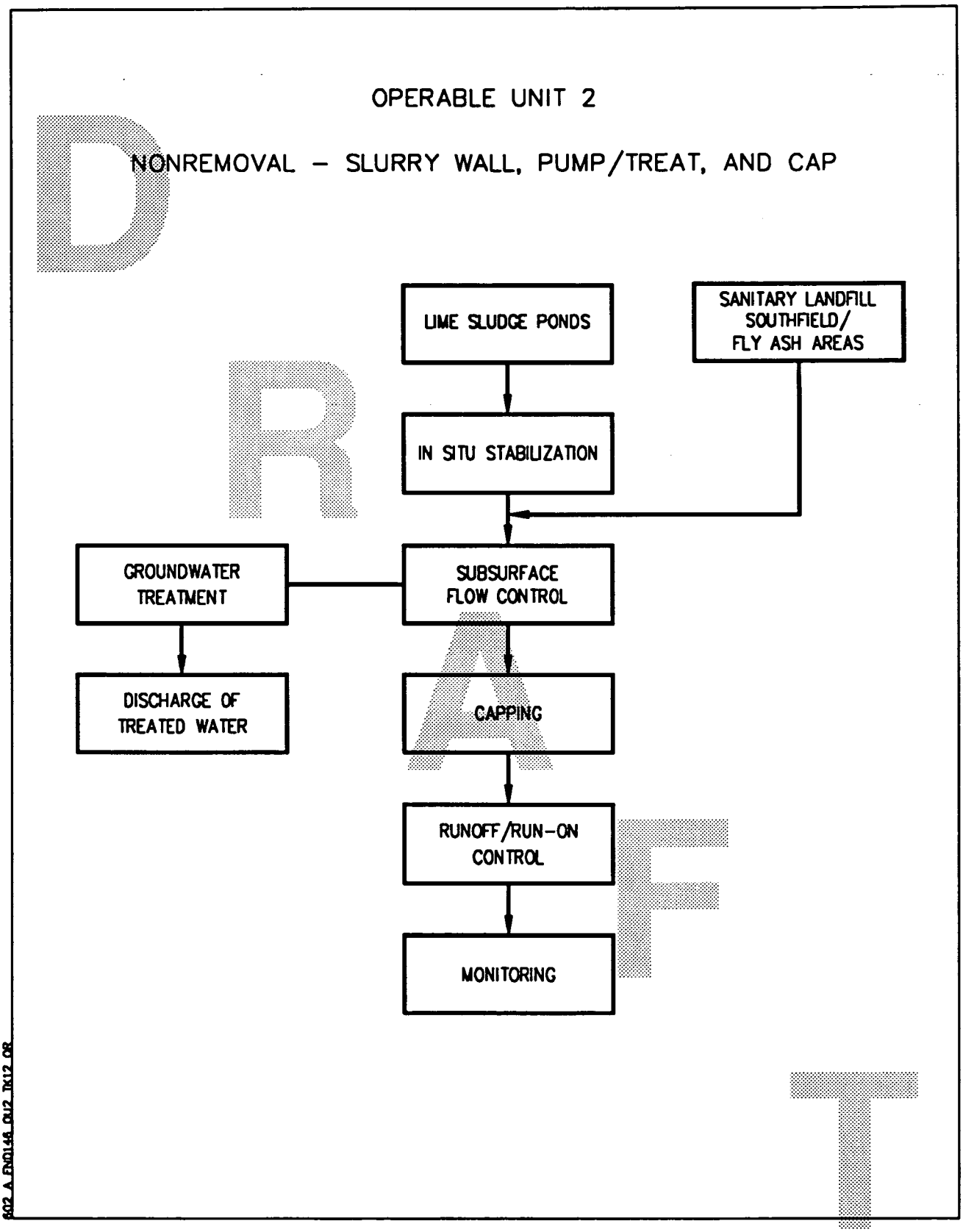

FIGURE 3–5. REMEDIAL ACTION ALTERNATIVE 2 (2–NA–B)

The remaining steps that comprise this alternative are identical to Alternative 1. Implementation of this alternative for Operable Unit 2 is depicted on Figures 3-6, 3-7, and 3-8.

3.1.3.1 System Requirements

Slurry Wall

A slurry wall would be constructed to surround the waste sites contained within Operable Unit 2. Estimated wall lengths are as follows:

- Sanitary Landfill - 900 feet
- Lime Sludge Ponds - 1300 feet
- Southfield/Fly Ash areas - 900 feet (wall placed on north side only)

The till layer is eroded where the running track is located; placement of a slurry wall on the south side of the Inactive Fly Ash Disposal/Southfield areas (the toe of the existing slope adjacent to the running track) would not be useful in the extraction of perched water because the wall would be located in the sand and gravel media beneath the glacial overburden and could not impact flow in perched water zones. The need for a slurry wall near any waste unit is dependent on the presence of sand lenses in the glacial overburden. The slurry wall would be constructed to a permeability no greater than 10^{-7} cm. The particular material used to construct the wall would depend on the contaminant likely to be encountered. One consideration for a slurry wall constructed to surround the Sanitary Landfill and Lime Sludge Ponds is that a portion of the wall would be adjacent to nearby railroad tracks. Subsurface soil stresses would likely require evaluation and consideration in the design of this portion of the wall.

Groundwater Pumping

Sand lenses in the glacial overburden can yield up to 50 gallons per minute (gpm) (IT 1988). The presence of sand lenses is confirmed by borehole logs taken from monitoring-well installations (ASI/IT 1989a). An interpretation of the lateral extent of the sand lenses is provided in glacial overburden fence diagrams contained in the draft of the Remedial Investigation Report for Operable Unit 2 (ASI/IT 1990b). These diagrams were developed from borehole logs prepared during the remedial investigation. Sand lenses appear to be continuous below the bottom of both the Sanitary Landfill and Lime Sludge Ponds. It is assumed that implementation of this alternative requires the placement of an extraction wellpoint system sized for no more than a 20 to 40 gpm flow rate for the Sanitary Landfill and Lime Sludge Ponds. A two-foot-thick sand lens appears to be present

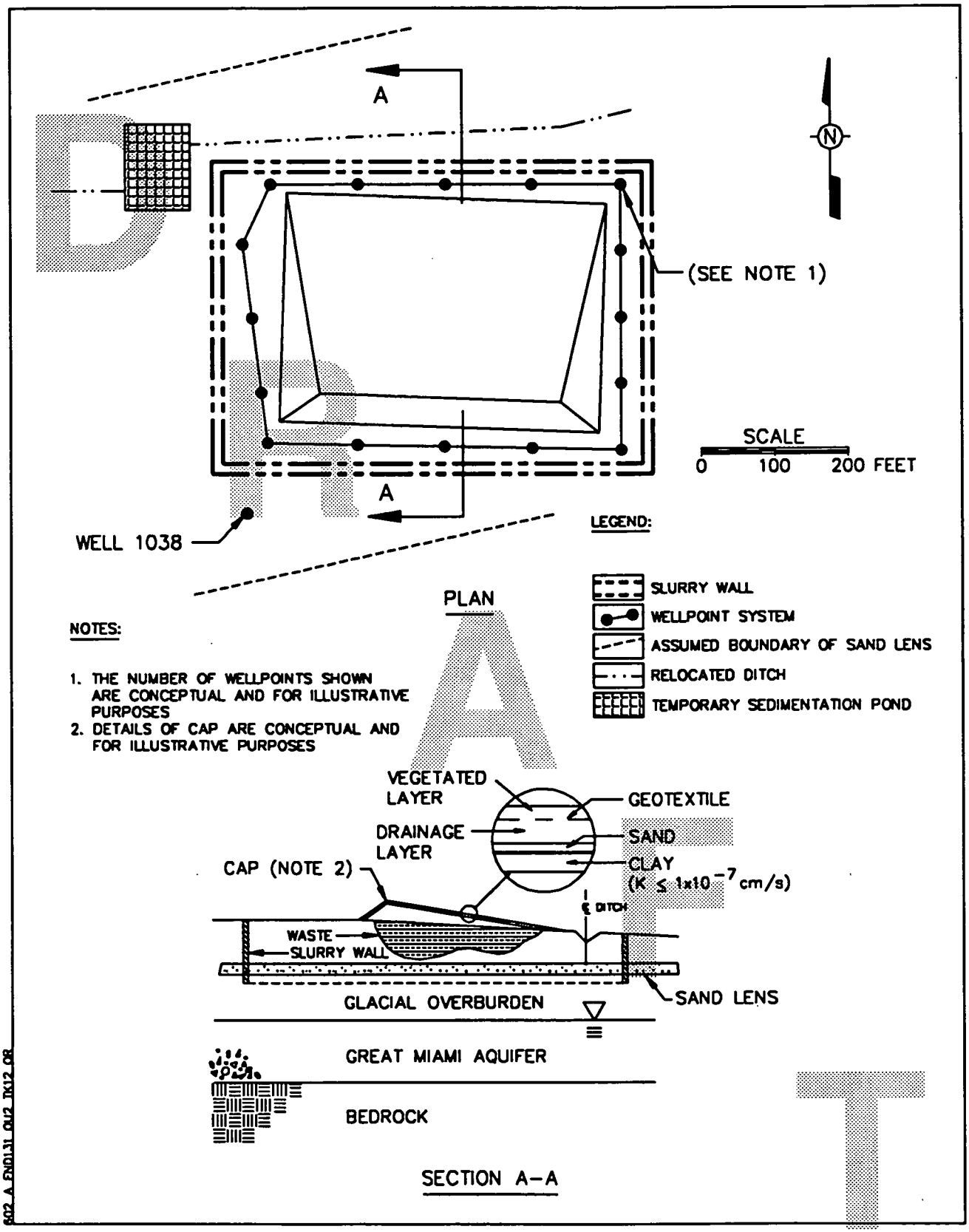

FIGURE 3-6. SANITARY LANDFILL – ALTERNATIVE 2

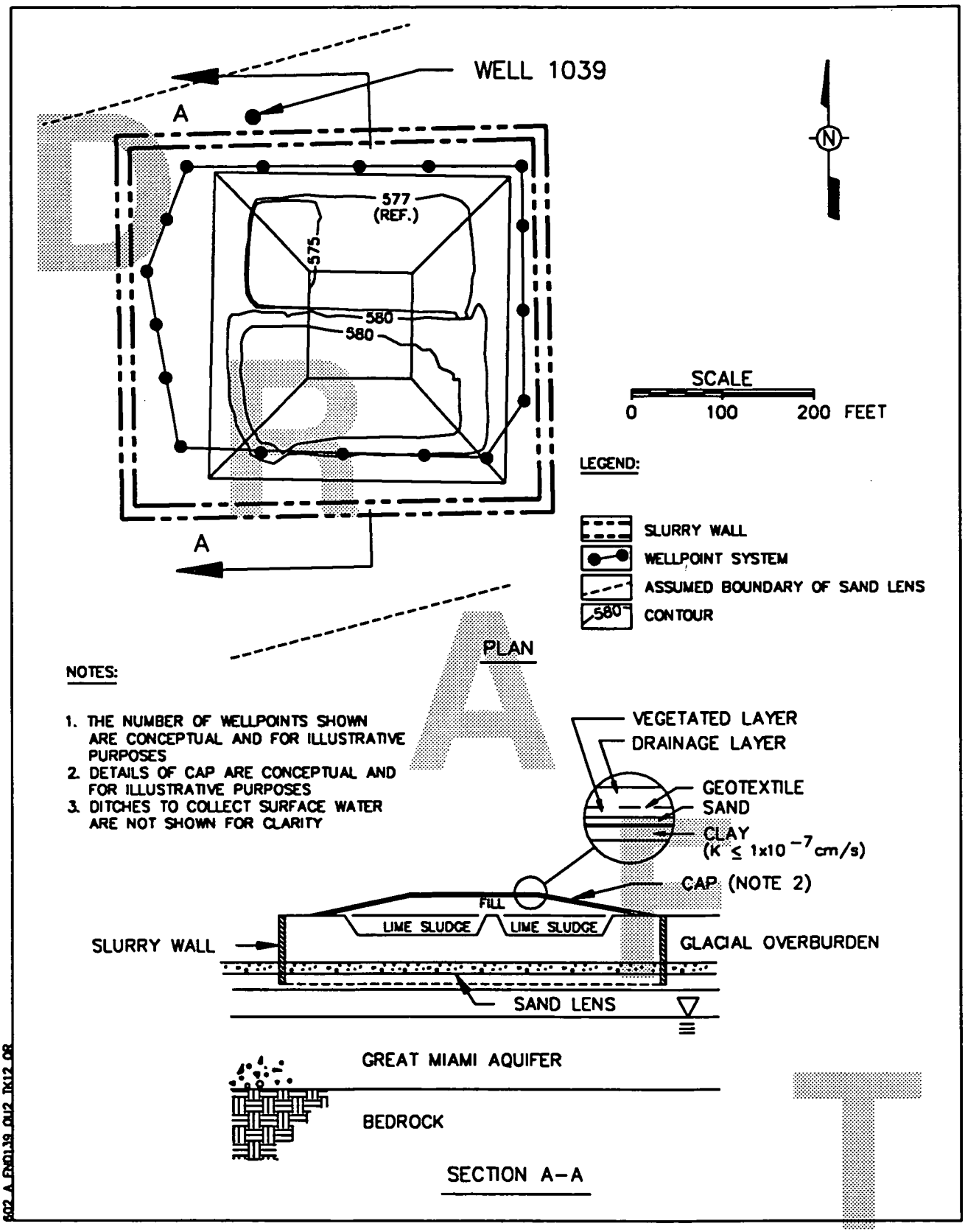

FIGURE 3-7. LIME SLUDGE PONDS – ALTERNATIVE 2

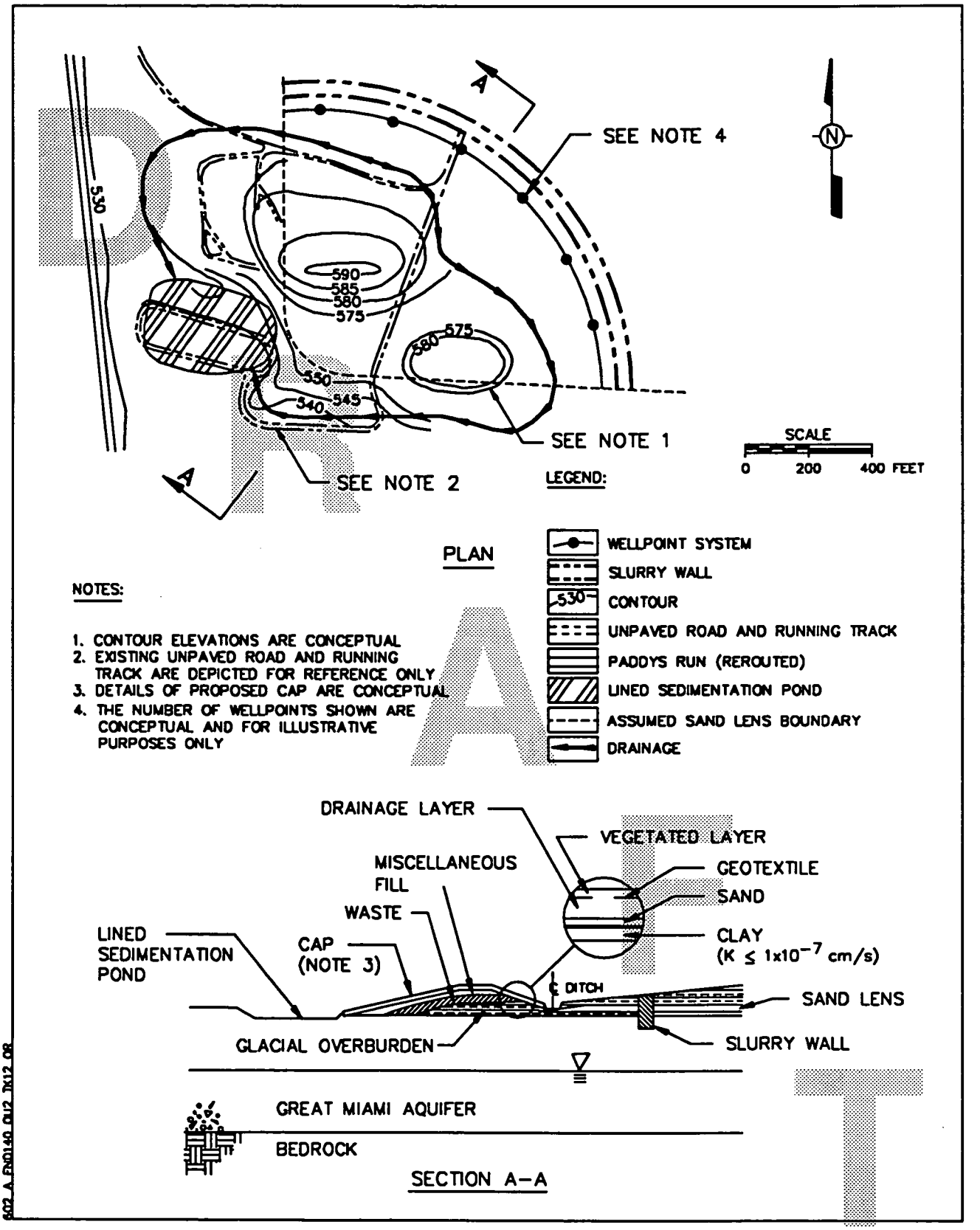

FIGURE 3–8. SOUTHFIELD – ALTERNATIVE 2

approximately 10 feet below grade within the boundaries of the Fly Ash/Southfield areas; however, the sand lens pinches out in the west and south. Therefore, wellpoint systems could be placed around the northeast perimeter of the Fly Ash/Southfield areas to extract perched groundwater.

The area depicted on Figure 3-9 is characterized by a layer of surficial silt and sand, underlain by a layer of silty clay approximately five feet thick. Underneath the silty clay is a layer of silty sand. This sand layer is directly above the sand and gravel media which characterizes the Great Miami Aquifer, but is above the water table.

Water Treatment

The water collected would be treated in a waste water treatment system prior to its release to the Great Miami River. This would reduce concentration levels of radiological or hazardous chemical constituents. The water treatment system should include all of the following:

- Presedimentation
- Sedimentation/filtration process which includes flocculation (chemical addition), filtration using pressure filtration to force fluid through a porous media
- Granulated activated carbon filtration which removes organic compounds.

After the sedimentation/filtration, the process uses ion exchange to remove metallic ions and uses reverse osmosis to remove Total Dissolved Solids. Therefore, prior to discharge, the volume of contaminants in the water is reduced, and the toxicity and mobility of contaminants are reduced.

Groundwater Treatment

As a result of the capping alternatives, perched groundwater contained within the glacial overburden would be collected. Groundwater data (second quarter, 1988 through first quarter, 1989), obtained from data generated during the RI, indicated the maximum concentrations of radionuclides and nonradionuclides detected in perched groundwater associated with Operable Unit 2 waste units were above the proposed concentration limit for total uranium. The proposed concentration of total uranium is 20 pCi/l and corresponds to a mass concentration of 30 µg/L of total uranium. This value was calculated using the 50-year Committed Effective Dose Equivalent (CEDE) limit of four mrem from an annual intake of radioactive materials in drinking water (ASI/IT 1990). The highest concentration of uranium found in the perched water zones for the Sanitary Landfill was 17 ± 3 µg/l with the remaining concentrations ranging between 2.0 ± 1 and 4.5 ± 0.6 µg/l. The highest

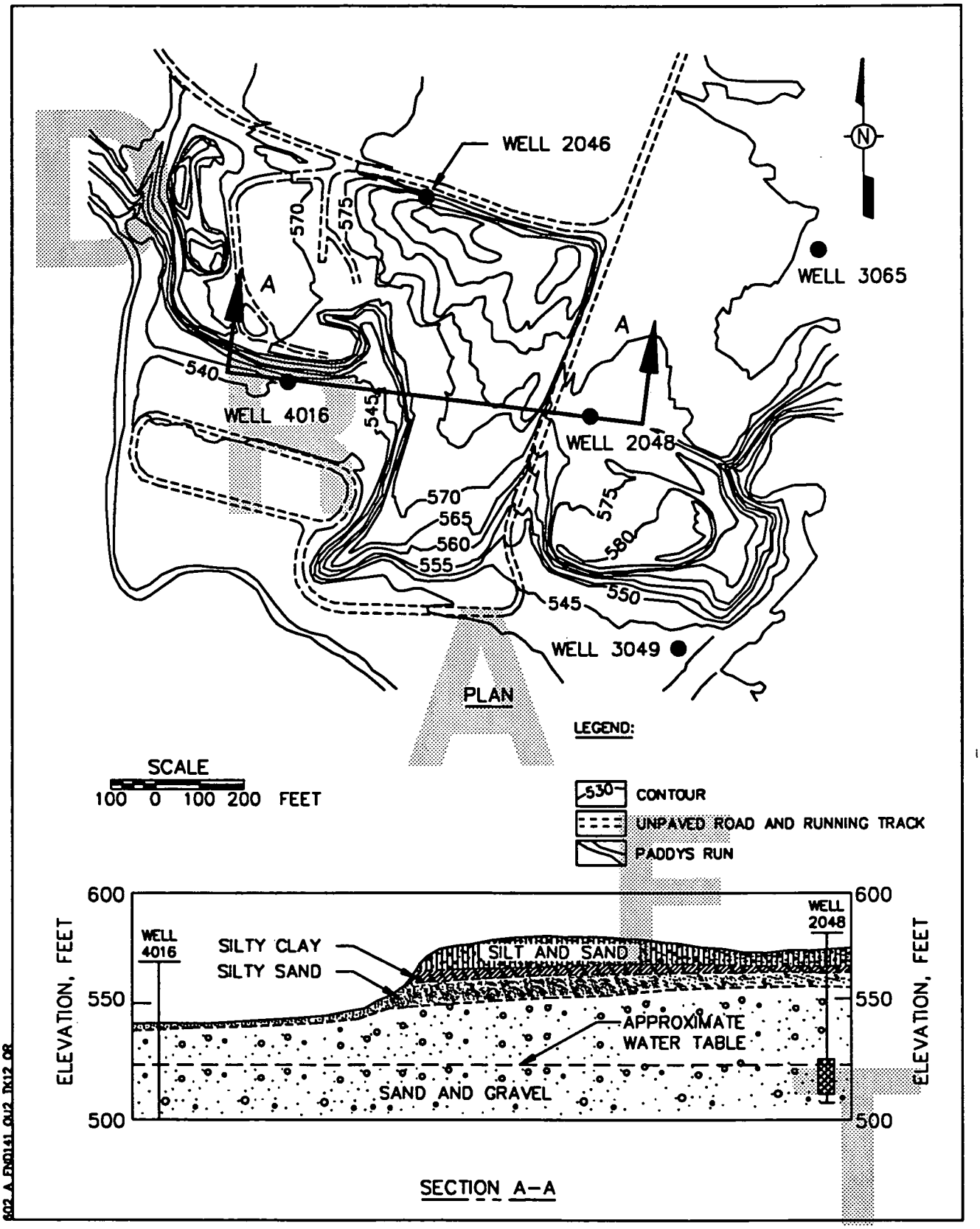

FIGURE 3–9. GEOLOGICAL CROSS SECTION OF SOUTHFIELD

concentration of total uranium found in the 1000 series wells for the Lime Sludge Ponds was 30 ± 5 µg/l with the remaining concentrations ranging between 1.0 ± 1.0 and 11.0 ± 2.0 µg/l. The highest concentration of total uranium found in the 1000 series wells for the Fly Ash/Southfield areas was 203 ± 32 µg/l with the remaining concentrations ranging between 1.0 ± 1.0 and 21 ± 4 µg/l (ASI/IT 1990b). The high value of 203 µg/l was detected in only one well (1046) during sampling round; subsequent rounds consistently showed concentrations one order of magnitude lower. The waste water treatment system also would be able to treat for organics and inorganics to reduce concentration levels prior to discharge.

3.1.3.2 Size and Configuration

A configuration of a wellpoint system for each solid waste site is shown in Figures 3-6, 3-7, and 3-8. The wellpoint system locations are approximate; exact placement would depend on a detailed analysis of data. Each system should be designed to pump no more than 20 to 40 gpm. The wellpoint system would be operated until contaminant concentrations are below levels of concern (as established by ARARs) or the quantity of collected water becomes negligible. The time frame for pumping is not presently known; however, for purposes of volume and cost estimation, one year is assumed. Should this alternative be selected for detailed analysis, modeling studies could determine a realistic time frame. Based on the above estimates, and assuming a sand lens area roughly equivalent to the area of each solid waste unit, approximately 436,000 gallons would be extracted from perched water zones underlying the Sanitary Landfill; for the Lime Sludge Ponds that figure is approximately 616,000 gallons; for the Southfield/Fly Ash areas, that figure is approximately 4,900,000 gallons (ASI 1990). These volume estimates of water assume a sand lens which is continuous under each area. For the Southfield/Fly Ash areas this is a conservative assumption. In addition, a one-year time frame was assumed to generate these volumes.

3.1.3.3 Remediation Time Frame

As stated earlier, it is assumed that groundwater pumping and treatment would take one year. Construction of the slurry walls would probably require six months to complete, and approximately one month would be needed to plug the extraction wells. After the well plugging, it would take an estimated two years for stabilization/capping. Total project length is estimated at three and one-half years.

3.1.3.4 Spatial Requirements

No major problems are foreseen at this time. Open space surrounds all of these solid waste units, so mobilization of equipment should pose no problems. It is probable, however, that space requirements would need to be coordinated with the remediation of other operable units.

3.1.3.5 Packaging/Transportation Requirements

There are no transportation requirements for the waste itself since all waste would remain in place and on property. Low-level radioactive wastes generated as a result of construction activities would be considered as LSA material and, if shipped off site, would be packaged in accordance with applicable portions of 49CFR173. The actual packaging used for transport and disposal of the low-level radioactive material should be watertight, certified for transport as LSA material (i.e., meet DOT packaging requirements), and of suitable size. Any low-level radioactive waste generated as a result of construction activities could be disposed of on property. Any on-site transportation of construction-generated wastes would be in accordance with the requirements set forth in DOE Order 5480.3a (Draft).

3.1.3.6 Wastes Generated

Construction activities would generate ordinary sanitary (solid) waste and low-level radioactive waste in the form of contaminated clothing, tools, and equipment. Treatment of groundwater would generate additional chemically and radiologically contaminated wastes. This additional waste volume and characterization will be defined more fully in the Detailed Analysis of Alternatives.

3.1.3.7 Permits Required

CERCLA exempts on-site activities from permit requirements. However, CERCLA necessitates compliance with substantive requirements of ARARs, so ARARs should be included in decision documentation used for site remediation. The discharge of treated water off site will be in compliance with the in-place NPDES permit.

3.1.4 Alternative 3 (2-NA-C): Nonremoval - Intercepting Trench, Groundwater Treatment, and Cap

The final nonremoval alternative for Operable Unit 2 is comprised of an interceptor trench for groundwater collection and control, associated treatment of any groundwater removed, and site closure including capping and runoff/run-on control measures. A flow chart for this alternative is depicted in Figure 3-10. Comparison with Alternative 2 indicates that they are identical, except that releases to the underlying aquifer would be controlled through a passive groundwater collection trench (described below) rather than through the use of a slurry wall and pumping wells.

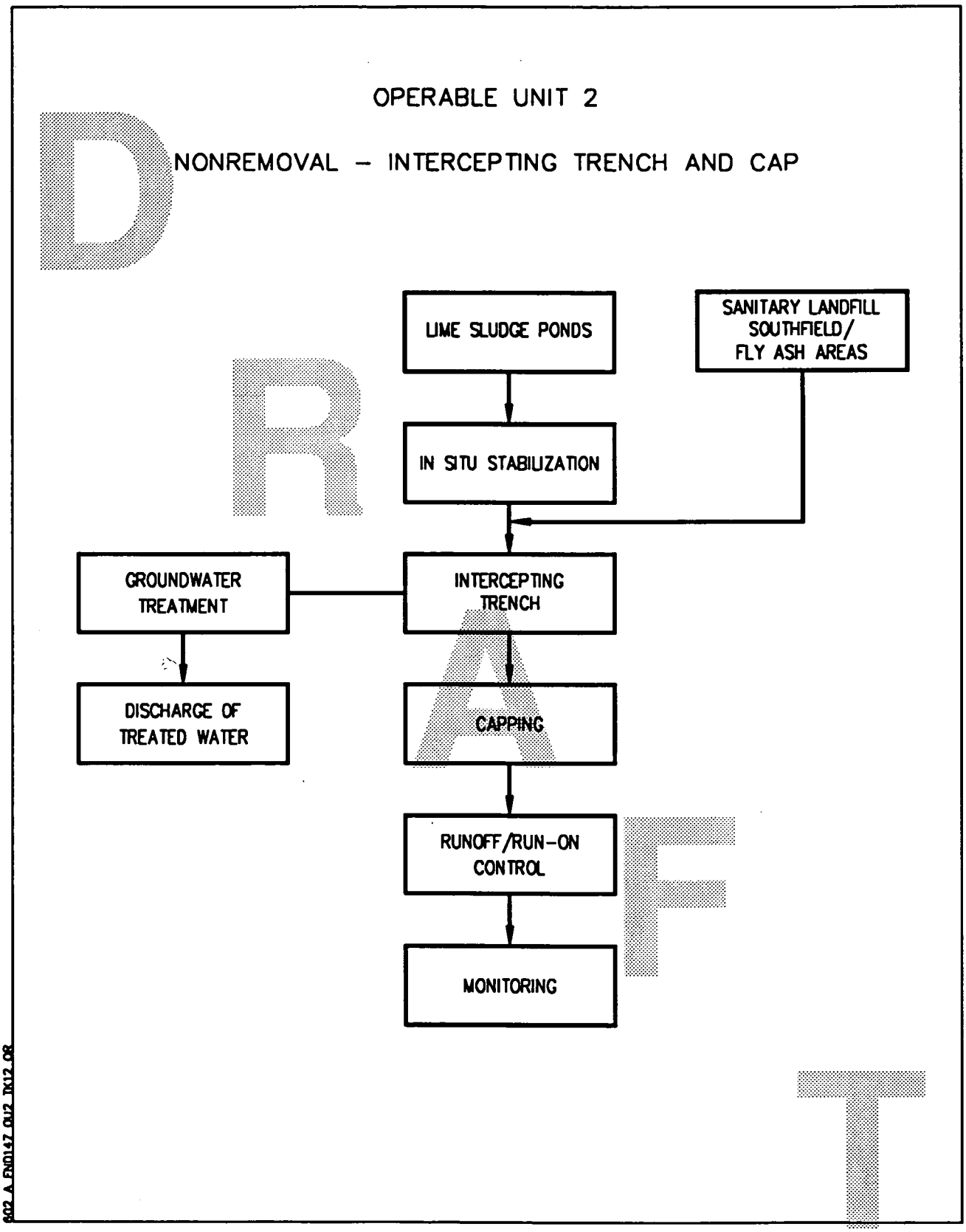

FIGURE 3-10. REMEDIAL ACTION ALTERNATIVE 3 (2-NA-C)

Assuming the presence of sand lenses in the glacial overburden underneath a particular solid waste site, an interceptor trench installed around the perimeter of a waste area (or, at a minimum, along one side) would capture horizontal movement of leachate in the sand lens before it escapes into the sand and gravel aquifer. Wells installed in the lowest point in the trench would be used to pump the collected water to the surface for treatment prior to its disposal. This method of groundwater collection and control is applicable to Operable Unit 2 since, in most cases, the solid waste units are either totally above the natural glacial material or intersect the glacial overburden only at shallow depths; in either case, the waste units are above the water table in the Great Miami Aquifer. Although the trench system could be maintained on a permanent basis, it is anticipated that the cap would reduce infiltration. This would result in a reduced stable level of leachate production and allow eventual abandonment of the trench.

3.1.4.1 System Requirements

Implementation of this alternative for Operable Unit 2 is depicted on Figures 3-11, 3-12, and 3-13. As discussed in Section 3.1.3.1, sand lenses appear to be continuous below the bottom of the Sanitary Landfill and Lime Sludge Ponds. The lowest depth of the lenses in both waste units is 20 to 25 feet below grade. For estimation purposes, the length of a trench that surrounds the Sanitary Landfill would be approximately 900 feet, and the length of a trench that surrounds the Lime Sludge Ponds would be approximately 1300 feet.

As discussed in Section 3.1.3.1, a sand lens appears to be present approximately ten feet below grade within the boundaries of the Fly Ash/Southfield areas; however, the sand lens pinches out in the west and south sections. For estimating purposes, a trench placed around the northeast perimeter of the Fly Ash/Southfield areas would be approximately 900 feet long. This alternative also would include capping and surface water runoff controls, which were discussed in detail in Section 3.1.2.

Collected groundwater could require treatment; the type of treatment needed is discussed more fully in Section 3.1.3.1.

3.1.4.2 Size and Configuration

The system should be sized to pump a maximum of 50 gpm, which is the maximum yield that is expected to occur. A treatment system would be needed to treat approximately 6,000,000 gallons over a one year period. Caps of approximately 1.1, 2, and 16 acres would be required for the Sanitary Landfill, Lime Sludge Ponds, and Fly Ash/Southfield areas, respectively.

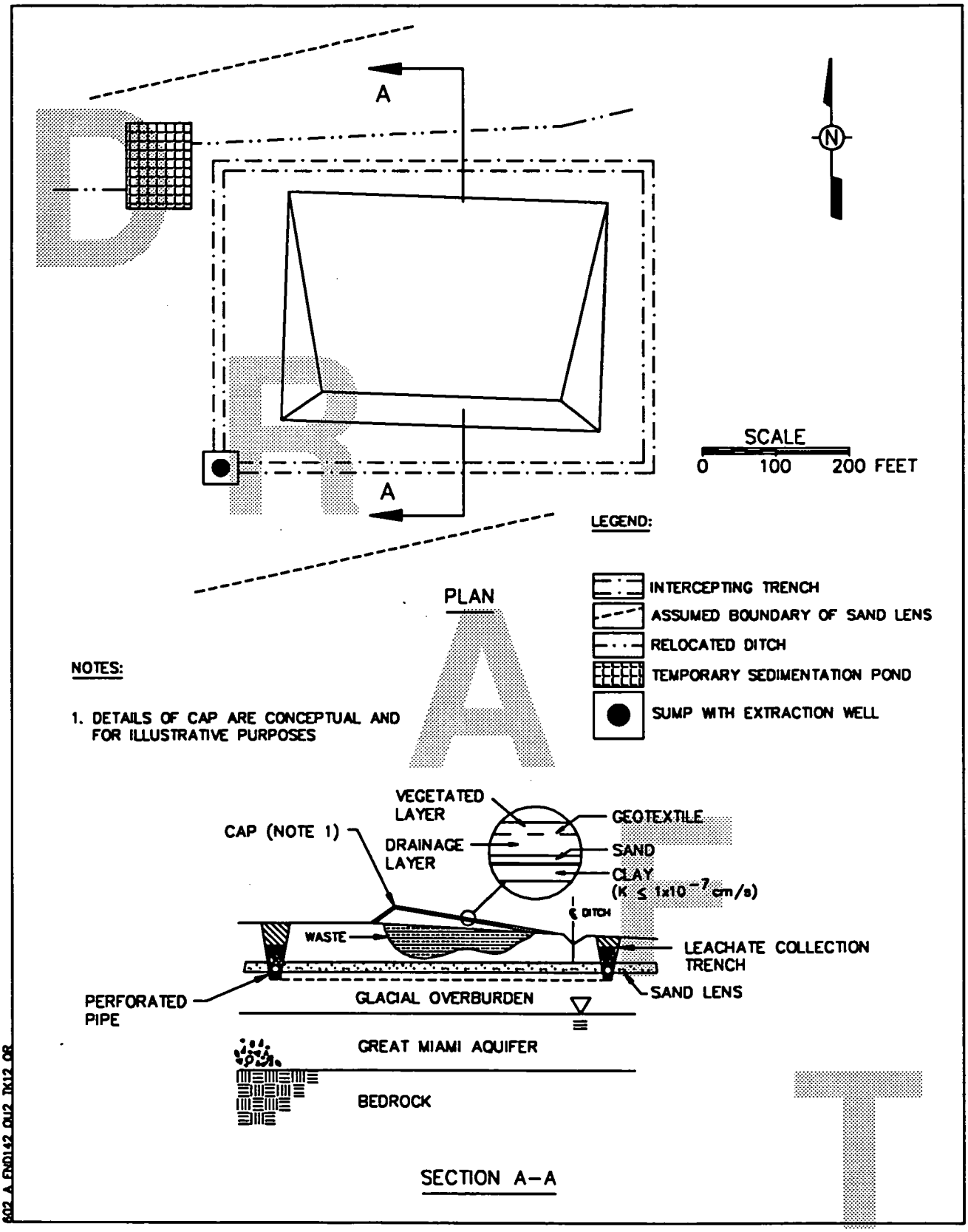

FIGURE 3-11. SANITARY LANDFILL – ALTERNATIVE 3

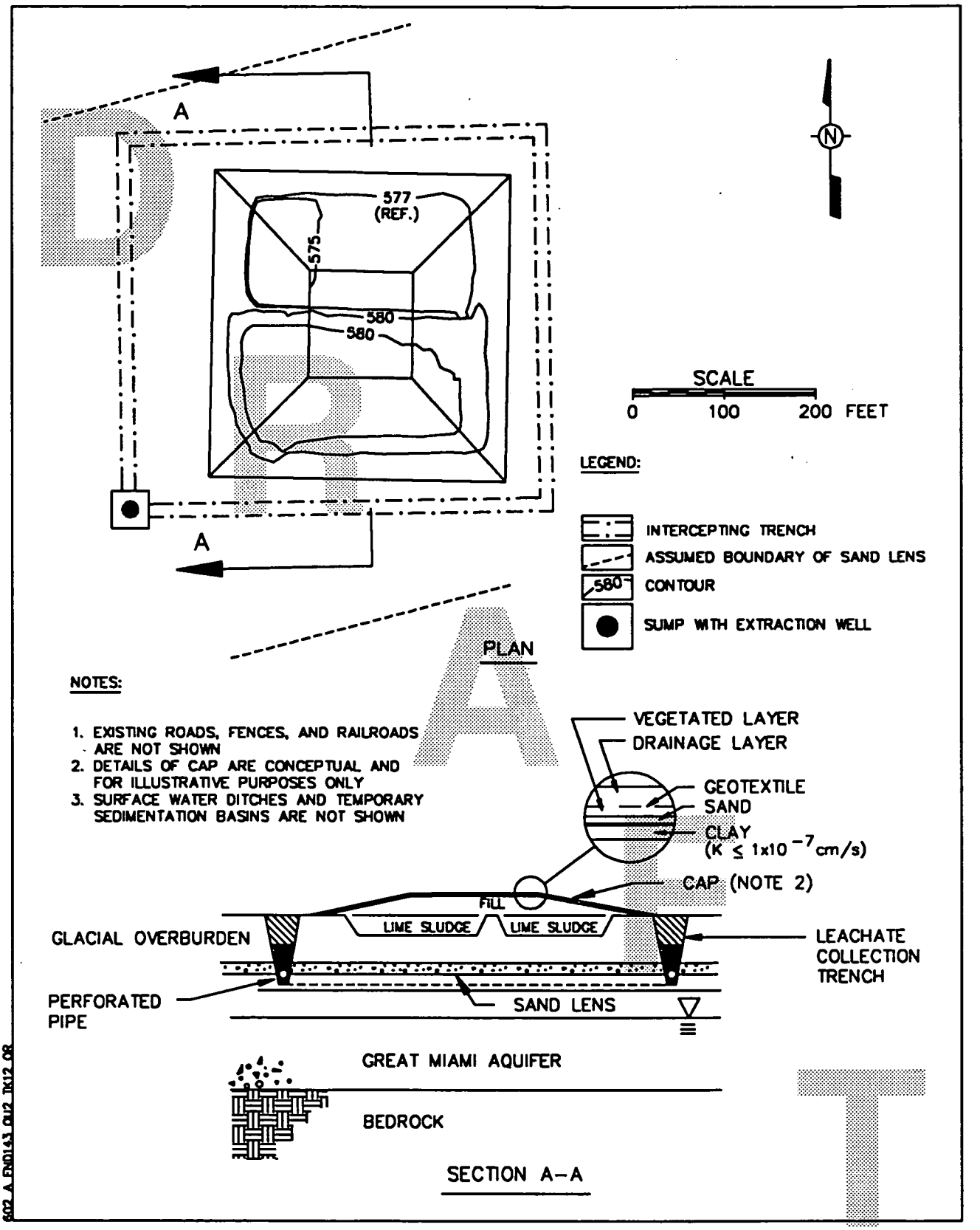

FIGURE 3-12. LIME SLUDGE PONDS – ALTERNATIVE 3

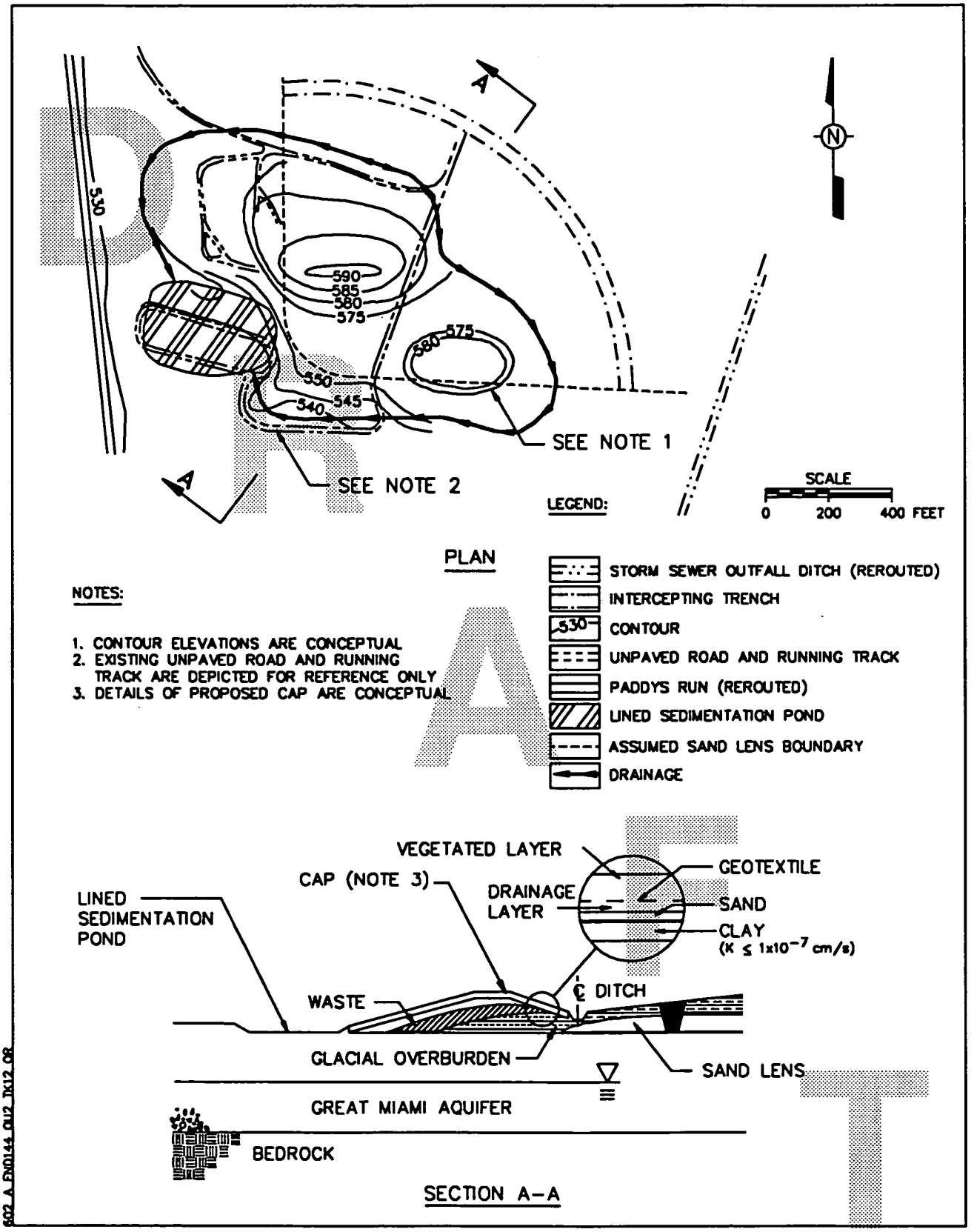

FIGURE 3–13. SOUTHFIELD – ALTERNATIVE 3

3.1.4.3 Remediation Time Frame

It is expected that trench construction would require approximately six months (including installation of sumps and wells). The system would be operated until a sufficiently low concentration of contaminants is achieved. A time frame of one year is assumed for estimating quantities of water for treatment; this estimate will be refined in the detailed analysis should this alternative be selected. Stabilization and capping are expected to take two years to complete for a total of three and one-half years.

3.1.4.4 Spatial Requirements

No major problems are foreseen at this time. Open space surrounds all of these solid waste units, so mobilization of equipment should pose no problems. It is probable that space requirements would need to be coordinated with the remediation of other operable units. Realignment of Paddys Run and the storm sewer outfall ditch would be required to minimize future erosion of the caps proposed for this alternative.

3.1.4.5 Packaging/Transportation Requirements

There would be no transportation requirements for the waste itself since all waste would remain in place and on property. Those low-level radioactive wastes generated as a result of construction activities would be considered LSA material and, if shipped off site, would be packaged in accordance with applicable portions of 49CFR173. The actual packaging used for transport and disposal of the low-level radioactive material should be watertight, certified for transport as LSA material (i.e., meet DOT packaging requirements) and of suitable size. Any low-level radioactive waste generated as a result of construction activities could be disposed of on property as well. Any on-site transportation of construction generated wastes would be in accordance with the requirements set forth in DOE Order 5480.3a (Draft).

3.1.4.6 Wastes Generated

Construction activities would generate ordinary sanitary (solid) waste and low-level radioactive waste in the form of contaminated clothing, tools, and equipment. Treatment of groundwater would generate additional chemical- and radiologically-contaminated wastes.

3.1.4.7 Permits Required

CERCLA exempts on-site activities from permit requirements. However, CERCLA necessitates compliance with substantive requirements of ARARs, so ARARs should be included in decision documentation used for site remediation. In addition, a permit would be required to discharge treated water off site.

3.1.5 Alternative 4 (2-RA-A): Removal - Bulk Packaging, Perched Groundwater Removal, and On-Property Disposal

This alternative incorporates removal and on-property disposal of the solid waste materials and the removal and treatment of perched groundwater contained in the sand lenses of Operable Unit 2 waste sites. For the Lime Sludge Ponds, this alternative involves the removal and treatment of standing water (from the North and South Lime Sludge Ponds), the mechanical and/or hydraulic removal of sludge, sludge treatment/bulk packaging, and placement in an on-property disposal facility (Figure 3-14). This alternative also involves the mechanical removal and on-property disposal of solid wastes from the Sanitary Landfill and the Fly Ash/Southfield areas. No records exist to confirm that hazardous wastes were placed in the Sanitary Landfill, but data indicates that the Sanitary Landfill contains the highest diversity of organic chemicals of all the Operable Unit 2 waste units. Therefore, the proposed ARARs for Operable Unit 2 consider RCRA Subtitle C for the Sanitary Landfill. It should be noted that the detected concentrations of the organics in the Sanitary Landfill are low, and the attention to RCRA is given only in the event that higher concentrations of organics are encountered. Therefore, this removal alternative is structured to accommodate this possibility. The removal of the waste in the Sanitary Landfill would include waste segregation, sampling (compatibility testing), and treatment of mixed and hazardous wastes. The option of packaging certain waste types prior to disposal would be available if deemed necessary for public health and environmental protection. The various options associated with this alternative are depicted in Figure 3-15.

3.1.5.1 System Requirements

The system requirements for on-property disposal would include a waste water treatment facility capable of treating any waste water generated as a result of the removal actions and perched groundwater (to decrease its radiological and hazardous effects) which underlies the waste units. A removal system, composed of mechanical and hydraulic equipment, would be required to remove and transport lime sludge and other wastes from their current locations to a waste processing

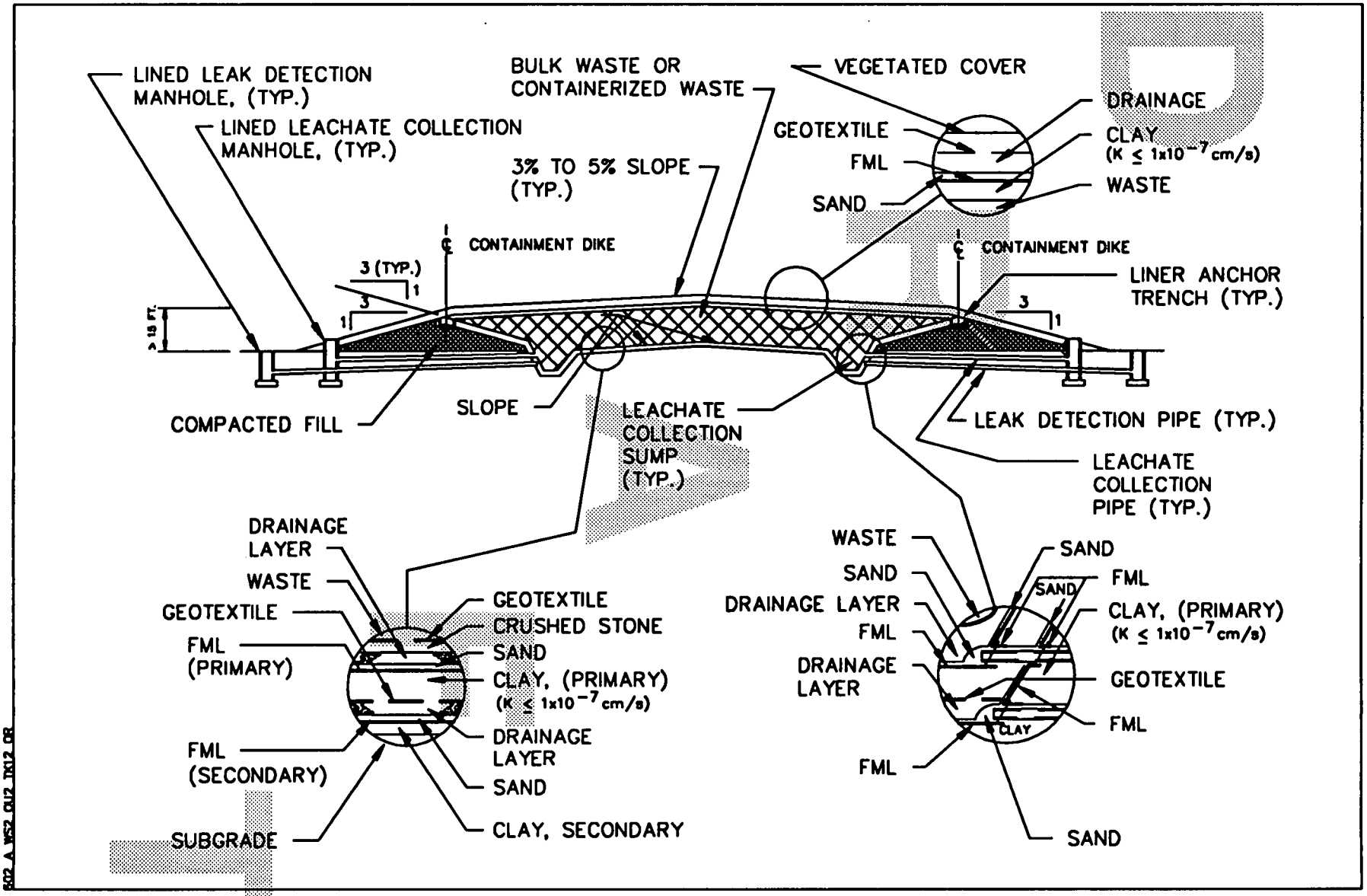

FIGURE 3-14. ABOVEGROUND DISPOSAL FACILITY

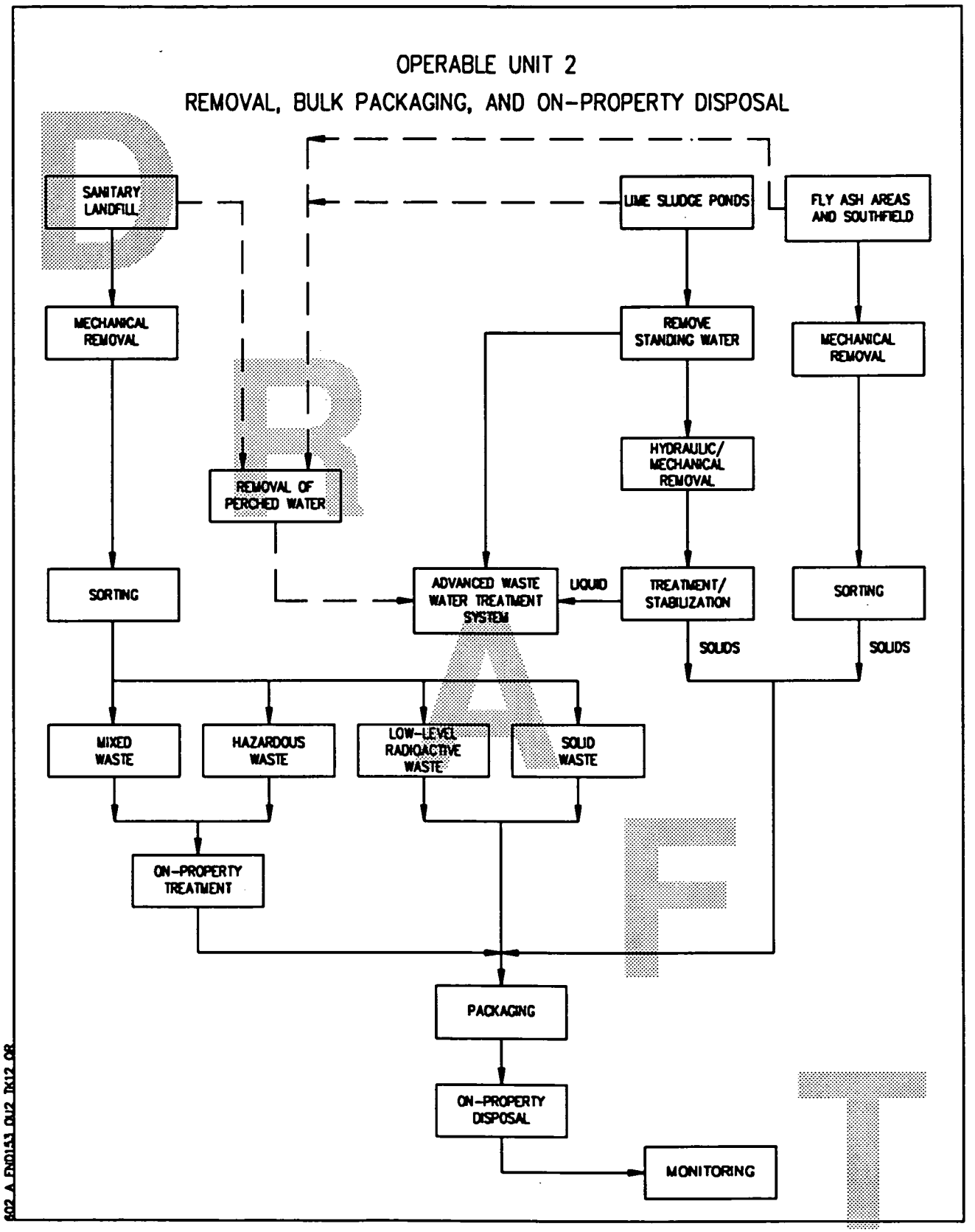

FIGURE 3-15. REMEDIAL ACTION ALTERNATIVE 4 (2-RA-A)

facility. Where applicable, a sorting method would be used to segregate the waste of the waste units. After segregation, the waste material (other than sludge) would be subjected to volume reduction. The system requirements are described more fully in sections 3.1.5.2 through 3.1.5.7.

3.1.5.2 Size and Configuration

If removal of standing water were required, an estimated total of 300,000 gallons of standing water would have to be pumped (removed) from the Lime Sludge Ponds before the sludge could be removed. An advanced waste water treatment (AWWT) system would be used to treat the standing water. The treatment of waste water is discussed in Section 3.1.3.1.

Removal of Solid Wastes

The standing water and the saturated condition of the sludge would require special removal, dewatering, and treatment considerations. Depending on the physical nature of the waste, such as the amount of water content and the presence of standing surface water, hydraulic dredging may be employed. This technology uses vacuuming and pumping to dislodge, capture, and transport sludges to a central collection/processing point. This dredging method cannot be used for the removal of nonsludge wastes, so it is applicable only to the lime sludge ponds. A mechanical removal system would be used to remove the lime sludge if the solids-content should increase to a level where mechanical removal is better suited. The high-solids sludge would be removed by dragline or other excavating equipment and transported to the collection/processing point.

After removal, the sludge material from the Lime Sludge Ponds may be treated prior to their disposal. The process options selected for further consideration include dewatering and stabilization/solidification. Any water removed from the pond or sludge would be treated through an AWWT system.

Mechanical removal methods would be employed to complete the removal of dried sludges from the Lime Sludge Ponds and solid wastes from the other waste units, since the wastes in these units have a fairly firm, compacted, and unsaturated consistency. This technology uses excavation equipment such as backhoes, draglines, and clamshells for waste removal. A truck or conveyor system would then move the excavated waste to the treatment area, which would contain equipment for segregation and volume reduction and for compaction/shredding. The treatment area would also include lime sludge treatment/stabilization/solidification process equipment.

Removal of Perched Groundwater

To achieve the overall goal of protecting human health and the environment, this alternative would provide for the removal and treatment of any perched groundwater contained in the sand lenses which are present in the vicinity of Operable Unit 2 waste sites. The need for perched groundwater removal would depend on the residual risk involved in leaving the water in place after removal of the solid waste, as well as the likelihood that perched water could be encountered during excavation. A well and wellpoint system that surrounds the Sanitary Landfill and Lime Sludge Ponds, while extending only partially around the Fly Ash/Southfield areas, would be installed. Wells would be placed in the glacial overburden layer to extract the perched groundwater.

Recently prepared fence diagrams and the figures presented in the most recent RI Report for Operable Unit 2 (ASI/IT 1990b) indicate that a thin sand lens does lie beneath the Sanitary Landfill waste and probably will not be encountered during excavation. The lens is indicated at Borehole 2027 and extends below the Sanitary Landfill to Borehole 3037, where it probably pinches out. For the Lime Sludge Ponds, a sand lens was detected at Borehole 1039 at a depth of 18 feet and a sand lens was detected at Borehole 2042. The sand lens appears to be continuous below the western portion of the Lime Sludge Ponds.

Sand lenses in the glacial overburden can yield up to 50 gallons per minute (gpm) (IT 1988). The presence of sand lenses is confirmed by borehole logs taken from monitoring-well installation (ASI/IT 1989a). It is assumed that implementation of this alternative would require the placement of an extraction wellpoint system sized for no more than a 20 to 40 gpm flow rate for the Sanitary Landfill and Lime Sludge Ponds. For the Southfield/Fly Ash areas, one sand lens is present at Well 2046, and a gravel lens was found at Well 3049 (ASI 1990). Therefore, wellpoint systems could be placed around the northeast perimeter of the Fly Ash/Southfield areas to extract perched groundwater, as previously discussed for Alternative 2.

The remaining area underneath the Southfield Area is typified by a cross section taken between Wells 4016 and 2048. This area is characterized by a layer of surficial silt and sand which is underlain by a layer of silty clay approximately five-feet thick. Underneath the silty clay is a layer of silty sand. This sand layer is directly above the sand and gravel media which characterizes the Great Miami Aquifer, but is above the water table (Figure 3-9).

Exact placement of the wellpoint system locations would depend on a detailed analysis of data. Each system should be designed to pump no more than 20 to 40 gpm. The wellpoint system would be operated until contaminant concentrations fell below levels of concern (as established by ARARs) or the quantity of collected water became negligible. The time frame for pumping is not presently known; however, for purposes of volume and cost estimation, one year is assumed. Based on the above estimates, and assuming a sand lens area roughly equivalent to the area of each solid waste unit, approximately 436,000 gallons would be extracted from perched water zones underlying the Sanitary Landfill; for the Lime Sludge Ponds that figure is approximately 616,000 gallons; for the Southfield/Fly Ash areas, that figure is approximately 4,900,000 gallons (ASI 1990).

Segregation and Volume Reduction of Waste Material

Prior to waste treatment and/or volume reduction, the waste from the Sanitary Landfill may be segregated to separate various types of wastes. Since the proposed ARARs for Operable Unit 2 consider RCRA Subtitle C for the Sanitary Landfill, compatibility testing would be performed prior to bulking wastes for disposal transport to ensure that consolidation would not result in incompatible waste reaction or in large volumes of waste that would be unacceptable for disposal. Compatibility testing refers to simple, rapid, and cost-effective testing procedures that are used to segregate wastes into broad categories. The wastes in the Sanitary Landfill would be tested and segregated into four categories: mixed, hazardous, low-level radioactive, or solid wastes.

Cover would be removed and visual inspection would be made to determine the types of materials (construction rubble, concrete, drums, etc.) present and the best method for handling and sorting them. Care will be taken during removal of materials to avoid puncturing drums or other containers, if they were encountered. The following segregation process options have been selected for further consideration:

- Magnetic Sorting - This method would identify areas of ferrous materials within the solid waste units. Recovered drums or containers would be isolated, and any contents would be screened or sampled to determine Resource Conservation and Recovery Act (RCRA) constituents and radioisotope composition.

- Manual Sorting - This method involves the "hands-on" separation of the different physical types of waste materials. The safest method would be used to evaluate and remove metals or other types of debris that are different from the majority waste forms. Special cleaning and decontamination procedures may be necessary for large objects prior to disposal.

- Screening/Sizing - Physical separation of materials may be required. To do this, a series of fixed or moving screens, sized to retain particles of a desired size range while allowing smaller particles and liquids to pass through the screen surface, would be used.

After segregation, and depending on the waste composition, the solid waste may be subjected to volume reduction prior to its disposal. The following process options are selected for further consideration:

- Compaction - Physically deforming or compressing the waste into a more dense configuration
- Shredding - Tearing or cutting the waste form into smaller pieces to facilitate handling and disposal

In addition to some manual sorting of materials, the need for a combination screening/shredding/ crushing system with a capacity of 10 to 20 tons per hour is anticipated.

Treatment - Sanitary Landfill Wastes

As the wastes in the Sanitary Landfill are excavated, they would be segregated (by sampling) into solid waste, low-level radioactive waste, mixed waste, or hazardous waste. The solid and low-level radioactive wastes would be delivered to the on-property disposal facility in bulk quantity by haulers.

The mixed and hazardous wastes would require treatment prior to on-property disposal. Various process options (rotary kiln incinerator, multiple hearth incinerator, fluidized bed incinerator, soil washing) are available to treat these wastes for disposal.

Rotary kiln incineration, because of its ability to handle waste in any physical form and its high incineration efficiency, is a preferred method for treating mixed-hazardous solid waste residues. The rotary kiln is a cylindrical, refractory-lined shell and is fueled by either natural gas, oil, or pulverized coal. The waste is heated by heat transfer from the combustion of product gases and the reflected heat from walls of the kiln. The rotary-kiln incinerator consists of the kiln and an afterburner to ensure complete combustion. The waste is placed into the kiln and passes through the combustion zone. It is also equipped with wet scrubber emission controls.

Multiple hearth incineration and fluidized bed incineration are technologies that also are capable of treating the sanitary landfill waste (EPA 1985).

Another technology which appears to be applicable is soil washing. Although soil washing has not been proven for specific CERCLA wastes, it appears to have the basic characteristics for successful application. Soil washing is effective in the removal of organics and volatile and nonvolatile metals. Soil washing is a process that extracts contaminants from excavated soil using a liquid medium composed of water, organic solvents, acids, or bases (depending upon the contaminants to be removed). A mobile extraction system uses water as the washing fluid. Contaminated soil enters the system through a feeder, where oversized nonsoil materials and debris that cannot be treated are removed with a coarse screen. The waste passes into a soil scrubber, where it is sprayed with washing fluid. Soil particles greater than 2 mm (.079 in) in diameter are sorted and rinsed, leave the scrubber, and are dewatered. The remaining soil enters a countercurrent chemical extractor, where additional washing fluid is passed countercurrent to the soil flow, removing the contaminants. The treated solids are then dewatered. The remainder of the process is a multistep treatment for removal of contaminants from the washing fluid prior to its recycling. Treatment of the washing fluid is generally accomplished by conventional wastewater treatment systems depending on the type of contamination (EPA 1988d).

Treatment - North and South Lime Sludge Ponds

The standing water on the lime sludge ponds could be either slurried with the lime sludge or removed prior to removing the lime sludge. By slurrying the standing water with the lime sludge, the need of treating the water would be avoided, and any contaminants in the water will be bound in the solidified product (accomplished through the addition of cement and fly ash). If the standing water is removed, it will be treated through an AWWT system.

Any contaminants (organics, inorganics, radionuclides) found in the sludge would be bound in the solid matrix of the hardened product which is produced through mixing proportionate amounts of fly ash and cement into the sludge. To obtain an optimal slurry moisture content, low solids sludge (8-15% solids) and high solid sludge would be blended together. When these solids are blended together to obtain an optimal slurry-moisture content, dewatering methods are not required. If dewatering were required, filtration would appear to be the most effective method of dewatering slurries. The solid/liquid separation process, if required, may include one of several process options

(belt press filtration, vacuum filtration, pressure filtration). The liquid from the solid/liquid separation process would be pumped to an AWWT system prior to its discharge through Manhole 175.

The stabilization (solidification) treatment that uses cement and fly ash offers the potential to immobilize contaminants such as organics and inorganics (i.e., the contaminants are bound within the solid matrix). The cement-based stabilization process is a well-recognized and proven process. Its waste form contains no free liquid and causes no dusting or air contamination. Treatability testing would be required to determine the optimal slurry-moisture content and the proportionate amounts of fly ash and cement required to produce a solidified waste.

After stabilization, the waste would be discharged to unit packages/containers and transported to an on-property disposal facility. Volume increase in the sludge could range up to 50 percent, but a reduction in net volume of the fly ash to be disposed of on property would offset this to some degree. The design production rate for a sludge treatment/stabilization facility would be 10 to 15 tons (approximately 8-13 cubic yards) of sludge per hour. A schematic diagram of a sludge treatment stabilization facility is shown in Figure 3-16.

Treatment - Perched Groundwater

Treatment of perched groundwater is discussed in Section 3.1.3.1

3.1.5.3 Remediation Time Frame

The time required to complete the remediation efforts as described in this alternative is estimated to be four years. This time frame begins with site mobilization and continues to decontamination, disassembly, construction of on-property disposal facility, and finally to process equipment removal.

3.1.5.4 Spatial Requirements

As excavation progresses, the solid waste material would be transported and deposited at the site. Disposal of solid waste could occur in an on-property disposal facility constructed for all FMPC wastes. The on-property disposal facility, intended for containment of low-level radioactive wastes, would be capable of storing RCRA hazardous or mixed wastes (as in the case of the Sanitary Landfill) under CERCLA (Consent Agreement).

DRAFT

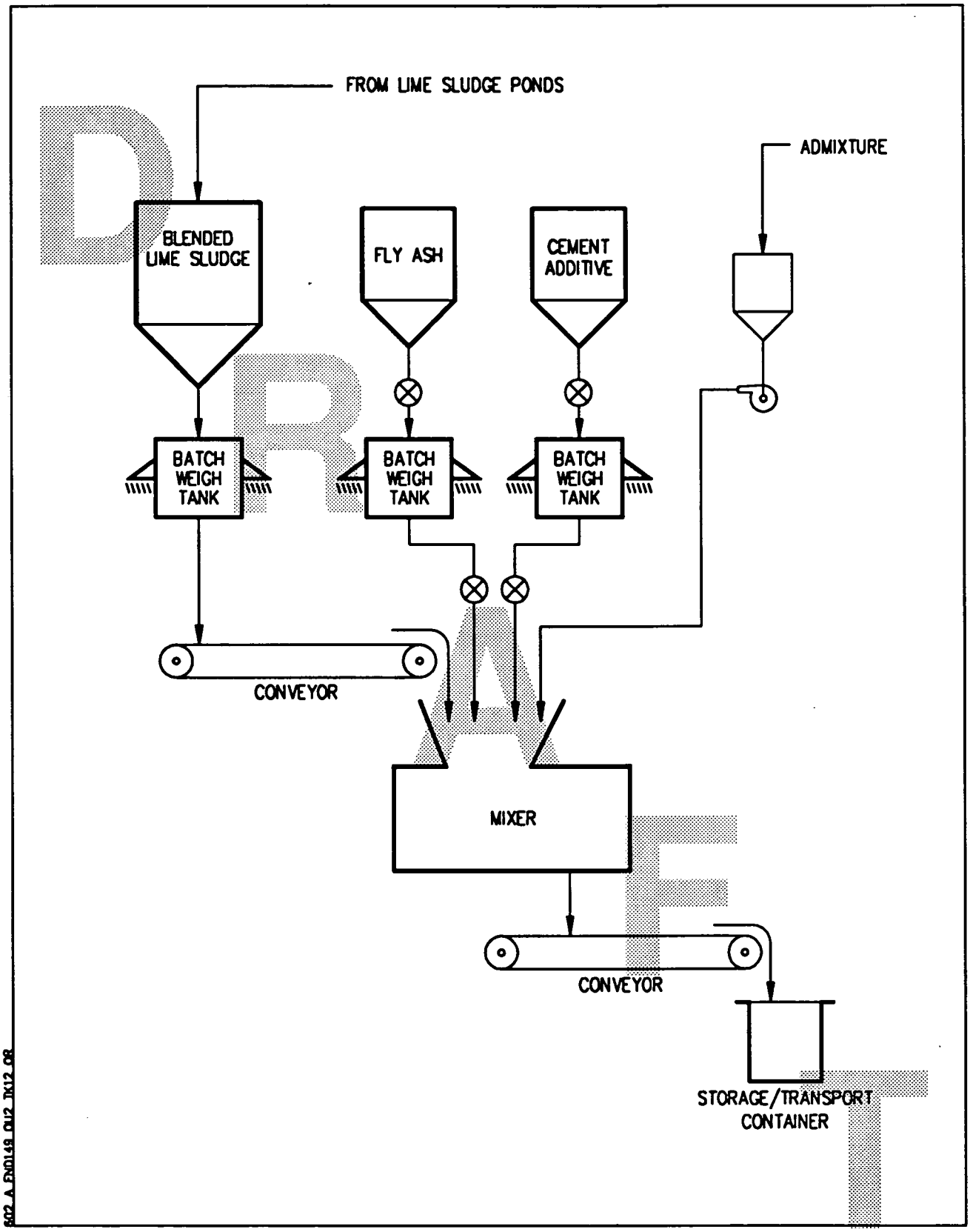

FIGURE 3-16. LIME SLUDGE STABILIZATION SYSTEM

The solid wastes contained in Operable Unit 2 could also be used as shielding for higher-activity wastes in the on-property disposal facility. The following areas will be required for process and on-property storage:

- Lime Sludge Stabilization Plant - Approximately one acre (includes packaging/load-out areas)
- On-Property Disposal Facility - Approximately 10 acres (area to store approximately 250,000 cubic yards of waste)

3.1.5.5 Packaging/Transportation Requirements

The cement/fly ash stabilization method would require packaging for the stabilized sludge to facilitate handling and control external exposure levels. No packaging would be required for the Fly Ash/Southfield areas because the consistency of these materials would facilitate the delivery of them, in bulk, to the on-property disposal facility. Haul trucks will transport all waste materials from the treatment or excavation area to the on-property facility. The haul trucks should be plastic lined and have canvas covers to minimize potential loss of contaminated soils during transport from the excavation area.

However, if Operable Unit 2 wastes from the Fly Ash/Southfield areas were placed in an on-property disposal facility that contained other FMPC wastes that were not compatible, then they also should be packaged/containerized in accordance with applicable portions of 49CFR173.

The waste from the Sanitary Landfill would be treated and, because it would be considered hazardous, must be packaged in accordance with RCRA storage requirements. The containers used to package the waste must be in compliance with 40CFR264 Subpart I and 40CFR260.10.

On-property transportation of all Operable Unit 2 wastes would be in accordance with requirements set forth in DOE Order 5480.3a (draft).

3.1.5.6 Wastes Generated

The following wastes would be generated during the execution of construction, excavation, treatment, and storage phases of this alternative:

- Water used in conjunction with hydraulic dredging and processing

- Low-level radioactive wastes in the forms of contaminated clothing, tools, and equipment that are generated during the construction and treatment phases
- Sanitary wastes

Disposal of the solid waste material generated during the remedial action could occur in a facility designed only for solid waste. The wastewater generated as a result of excavation (cleaning of equipment, etc.) would be treated in the AWWT.

3.1.5.7 Permits Required

CERCLA exempts on-site activities from permit requirements. There are no off-site activities associated with Alternative 4; however, CERCLA guidelines necessitate compliance with substantive ARAR requirements. These requirements should be included in decision documentation used for site remediation. The requirements will be addressed in greater detail in the next task of the FS, Detailed Analysis of Alternatives.

3.1.6 Alternative 5 (2-RA-B): Removal - Bulk Packaging, Perched Groundwater Removal, and Off-Site Disposal

The second removal alternative is similar to Alternative 4, except that the removed waste materials would be transported and disposed of at an approved off-site location (Figure 3-17). One concomitant change in this alternative is that the removed wastes require packaging prior to off-site transport. If the Sanitary Landfill were found to contain hazardous waste, the wastes would be either treated on property, packaged and shipped off property to a permitted disposal facility, or packaged and shipped off property to a permitted treatment storage and disposal (TSD) facility. The low-level radioactive wastes would not require treatment prior to shipping and would be shipped to an approved or licensed off-site facility. Mixed waste would require treatment to reduce the concentration of hazardous constituents prior to packaging and off-site disposal. A temporary storage structure would be required at the FMPC to support the off-site transportation effort. The transport process options selected for further consideration include transport by rail and transport by truck. Any waste acceptance criteria the disposal facility imposes (e.g., no free liquids, no respirable particulate fines) would be satisfied prior to shipping.

3.1.6.1 System Requirements

The system requirements for off-site disposal include a waste water-treatment facility that would be capable of treating any waste water generated as a result of the removal action and the perched groundwater,

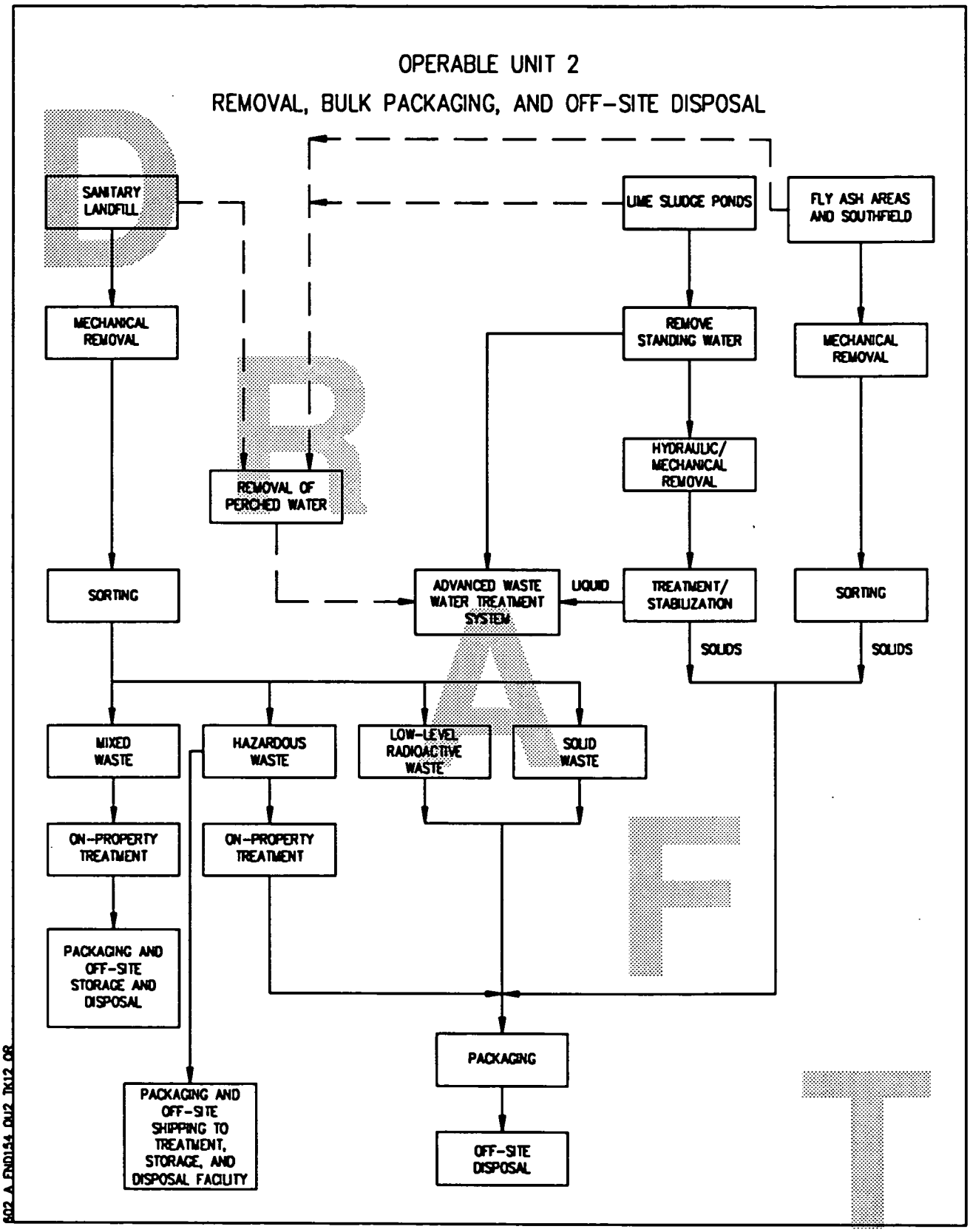

FIGURE 3-17. REMEDIAL ACTION ALTERNATIVE 5 (2-RA-B)

which underlies the waste units, to decrease its radiological and hazardous effects. A removal system, composed of mechanical and hydraulic equipment, would be required to transport lime sludge and other wastes from their current locations to a waste processing facility. Where applicable, a sorting method would be used to segregate the wastes. After segregation, the waste material (other than sludge) would be subjected to volume reduction. The system requirements are described more fully in sections 3.1.6.2 through 3.1.6.8.

3.1.6.2 Size and Configuration

If removal of standing water were required, an estimated total of 300,000 gallons of standing water would have to be pumped (removed) from the Lime Sludge Ponds before the sludge could be removed. An AWWT system would be used to treat the standing water. The treatment waste water is discussed in Section 3.1.3.1.

Removal of Solid Wastes

The standing water and the saturated condition of the sludge would require special removal, dewatering, and treatment considerations. Depending on the physical nature of the waste, such as the amount of water content and the presence of standing surface water, hydraulic dredging may be employed. This technology uses vacuuming and pumping to dislodge, capture, and transport the sludges to a central collection/processing point. This dredging method cannot be used for the removal of nonsludge wastes, so it is applicable only to the lime sludge ponds. A mechanical removal system would be used to remove the lime sludge if the solids content increases to a level where mechanical removal is better suited. After removal, the sludge material from the Lime Sludge Ponds may need to be treated prior to its disposal. The process options selected for further consideration could include dewatering, stabilization, and/or drying. Any water removed from the pond or sludge would probably be treated through the AWWT system.

Mechanical removal methods would be employed to complete the removal of dried sludges from the Lime Sludge Pond and solid wastes from the other waste units, since these wastes would have a fairly firm, compacted, and unsaturated consistency. This technology uses excavation equipment such as backhoes, draglines, and clamshells for waste removal. A truck or conveyor system then moves the excavated waste to the treatment area, which contains equipment for segregating/sorting the waste and for compaction/shredding. The treatment area would also include lime sludge treatment/stabilization/process equipment.

Removal of Perched Groundwater

To achieve the overall goal of protecting human health and the environment, this alternative would provide for the removal and treatment of any perched groundwater contained in the sand lenses which are present in the vicinity of Operable Unit 2 waste sites. The need for perched groundwater removal would depend on the residual risk involved in leaving the water in place after removal of the waste, as well as the likelihood that perched water could be encountered during excavation. A well and wellpoint system that surrounds the Sanitary Landfill and Lime Sludge Ponds while extending only partially around the Fly Ash/Southfield areas would be installed. Wells would be placed in the till layer to extract the perched groundwater.

Recently prepared fence diagrams and the figures presented in the most recent RI Report for Operable Unit 2 (ASI/IT 1990b) indicate that a thin sand lens does lie beneath the Sanitary Landfill waste and probably will not be encountered during excavation. The lens is indicated at Borehole 2027 and extends below the Sanitary Landfill to Borehole 3037, where it probably pinches out.

For the Lime Sludge Ponds, a sand lens was detected at Borehole 1039 at a depth of 18 feet and a sand lens was detected at Borehole 2042. The sand lens appears to be continuous below the western portion of the Lime Sludge Ponds.

Sand lenses in the glacial overburden can yield up to 50 gpm (IT 1988). The presence of sand lenses is confirmed by borehole logs taken from monitoring-well installation (ASI/IT 1989a). It is assumed that implementation of this alternative would require the placement of an extraction wellpoint system sized for no more than a 20 to 40 gpm flow rate for the Sanitary Landfill and Lime Sludge Ponds. For the Southfield/Fly Ash areas, one sand lens is present at Well 2046, and a gravel lens was found at Well 3049 (ASI 1990). Therefore, wellpoint systems could be placed around the northeast perimeter of the Fly Ash/Southfield areas to extract perched groundwater, as previously discussed for Alternative 2.

The remaining area underneath the Southfield is typified by a cross section taken between Wells 4016 and 2048. This area is characterized by a layer of surficial silt and sand which is underlain by a layer of silty clay approximately five feet thick. Underneath the silty clay is a layer of silty sand. This sand layer is directly above the sand and gravel media which characterizes the Great Miami Aquifer, but is above the water table (Figure 3-9). Wellpoint systems located in this area would be of limited effectiveness since this groundwater is not trapped as is the groundwater in a perched-water zone.

Exact placement of the wellpoint system locations would depend on a detailed analysis of data. Each system should be designed to pump no more than 20 to 40 gpm. The wellpoint system would be operated until contaminant concentrations fell below levels of concern (as established by ARARs) or the quantity of collected water became negligible. The time frame for pumping is not presently known; however, for purposes of volume and cost estimation, one year is assumed. Based on the above estimates, and assuming a sand lens area roughly equivalent to the area of each solid waste unit, approximately 436,000 gallons would be extracted from perched water zones underlying the Sanitary Landfill; for the Lime Sludge Ponds that figure is approximately 616,000 gallons; for the Southfield/Fly Ash areas, that figure is approximately 4,900,000 gallons (ASI 1990).

Segregation and Volume Reduction of Waste Material

Prior to waste treatment and/or volume reduction, the waste from the applicable waste units (Sanitary Landfill and Fly Ash/Southfield areas) may be segregated into separate, various components (concrete, asphalt, construction rubble, etc.). Since the proposed ARARs for Operable Unit 2 consider RCRA Subtitle C for the Sanitary Landfill, compatibility testing would be performed prior to bulking wastes for disposal transport to ensure that consolidation would not result in incompatible waste reaction or in large volumes of waste that would be unacceptable for disposal.

Compatibility testing refers to simple, rapid, and cost-effective testing procedures that are used to segregate wastes into broad categories. The wastes in the Sanitary Landfill would be tested and segregated into four categories: mixed, hazardous, low-level radioactive, or solid wastes.

Cover would be removed, visual inspection would be made to determine the types of material present and the best method for handling and sorting them. Care would be taken during removal of materials to avoid puncturing drums or other containers, if they were encountered. The following segregation technologies have been selected for further consideration:

- Magnetic Sorting - This method would identify areas of ferrous materials within the solid waste units. Recovered drums or containers would be isolated, and any contents would be screened or sampled to determine RCRA constituents and radioisotope composition.

- Manual Sorting - This method involves the hands-on separation of the different physical types of waste materials. The safest method would be used to evaluate and remove metals or other types of debris that are

DRAFT

different from the majority waste forms. Special cleaning and decontamination procedures may be necessary for large objects prior to their disposal.

- Screening/Sizing - Physical separation of materials may be required. To do this, a series of fixed or moving screens, sized to retain particles of a desired size range while allowing smaller particles and liquids to pass through the screen surface, would be used.

After segregation, and depending on the waste composition, the solid waste may be subjected to volume reduction prior to its disposal. The following process options are selected for further consideration:

- Compaction - Physically deforming or compressing the waste into a more dense configuration
- Shredding - Tearing or cutting the waste form into smaller pieces to facilitate handling and disposal

In addition to some manual sorting of materials, the need for a combination screening/shredding/ crushing system with a capacity of 10 to 20 tons per hour is anticipated.

In addition, the wastes from the Sanitary Landfill would be segregated into four categories: mixed waste, hazardous waste, low-level radioactive wastes, and solid waste. Since the proposed ARARs for Operable Unit 2 consider RCRA Subtitle C for the Sanitary Landfill, compatibility testing will be performed prior to disposal to ensure that consolidation will not result in incompatible waste reaction or in large volumes of waste that are unacceptable for off-site disposal. Compatibility testing refers to simple, rapid, and cost-effective testing procedures that are used to segregate wastes into broad categories.

Treatment - Sanitary Landfill Wastes

As the wastes in the Sanitary Landfill are excavated, they would be segregated (by sampling) into solid waste, low-level radioactive waste, mixed waste, or hazardous waste. The solid and low-level radioactive wastes would not require treatment prior to being packaged and shipped to an approved or licensed off-site disposal facility.

The mixed and hazardous wastes would require treatment prior to off-site disposal. Various process options exist (rotary kiln incinerator, multiple hearth incinerator, fluidized bed incinerator, soil washing) which are available to treat these wastes for disposal.

Rotary kiln incineration, because of its ability to handle waste in any physical form and its high incineration efficiency, is a preferred method for treating mixed hazardous solid waste residues. The rotary kiln is a cylindrical, refractory-lined shell and is fueled by either natural gas, oil, or pulverized coal. The waste is heated by heat transfer from the combustion of product gases and the reflected heat from walls of the kiln. The rotary-kiln incinerator consists of the kiln and an afterburner to ensure complete combustion. The waste is placed into the kiln and passes through the combustion zone. It is also equipped with wet scrubber emission controls.

Multiple hearth incineration and fluidized bed incineration are technologies that also are capable of treating the sanitary landfill waste (EPA 1985).

Another technology which appears to be applicable is soil washing. Although soil washing has not been proven for specific CERCLA wastes, it appears to have the basic characteristics for successful application. Soil washing is effective in the removal of organics and volatile and nonvolatile metals. Soil washing is a process that extracts contaminants from excavated soil using a liquid medium composed of water, organic solvents, acids, or bases (depending upon the contaminants to be removed). A mobile extraction system uses water as the washing fluid. Contaminated soil enters the system through a feeder, where oversized nonsoil materials and debris that cannot be treated are removed with a coarse screen. The waste passes into a soil scrubber, where it is sprayed with washing fluid. Soil particles greater than 2 mm (.079 in) in diameter are sorted and rinsed, leave the scrubber, and are dewatered. The remaining soil enters a countercurrent chemical extractor, where additional washing fluid is passed countercurrent to the soil flow, removing the contaminants. The treated solids are then dewatered. The remainder of the process is a multistep treatment for removal of contaminants from the washing fluid prior to its recycling. Treatment of the washing fluid is generally accomplished by conventional wastewater treatment systems depending on the type of contamination (EPA 1988d).

Treatment - North and South Lime Sludge Ponds

The standing water on the lime sludge ponds could be either slurried with the lime sludge or removed prior to removing the lime sludge. By slurrying the standing water with the lime sludge, the need of treating the water would be avoided, and any contaminants in the water will be bound in the solidified product (accomplished through the addition of cement and fly ash). If the standing water is removed, it will be treated through an AWWT system.

Any contaminants (organics, inorganics, radionuclides) found in the sludge would be bound in the solid matrix of the hardened product which is produced through mixing proportionate amounts of fly ash and cement into the sludge. To obtain an optimal slurry moisture content, low solids sludge (8-15% solids) and high solid sludge would be blended together. When these solids are blended together to obtain an optimal slurry moisture content, dewatering methods are not required. If dewatering were required, filtration appears to be the most effective method of dewatering slurries. The solid/liquid separation process, if required, may include one of several process options (belt press filtration, vacuum filtration, pressure filtration). The liquid from the solid/liquid separation process would be pumped to an AWWT system prior to its discharge through Manhole 175.

The stabilization (solidification) treatment that uses cement and fly ash offers potential to immobilize contaminants such as organics and inorganics (i.e., the contaminants are locked within the solid matrix). The cement-based stabilization process is a well-recognized and proven process. Its waste form contains no free liquid and causes no dusting or air contamination. Treatability testing would be required to determine the optimal slurry-moisture content and the proportionate amounts of fly ash and cement required to produce a solidified waste.

After stabilization, the Lime Sludge Pond waste would be discharged to unit packages/containers for transportation to an off-site disposal facility. Volume increase in the sludge could range up to 50 percent, but a reduction in net volume of the fly ash to be disposed of on property would offset this to some degree. The design production rate for the sludge treatment/stabilization/solidification facility would be 10 to 15 tons of sludge per hour or approximately 8 to 13 cubic yards of sludge per hour. A schematic diagram of a sludge treatment/stabilization/solidification facility is shown in Figure 3-16.

Treatment - Perched Groundwater

The treatment of perched groundwater is discussed in Section 3.1.3.1.

3.1.6.3 Remediation Time Frame

The time required to complete the remediation efforts as described in this alternative is estimated to be four years. This time frame begins with site mobilization and continues to decontamination, disassembly, and finally to process equipment removal.

3.1.6.4 Spatial Requirements

As excavation progresses, the solid waste material would be transported for interim storage at the site.

The following areas would be required for process and off-site storage:

- Lime Sludge Stabilization Plant - Approximately one acre (includes packaging/load-out areas)
- Temporary Storage/Load-Out Facility - Area to store approximately 25,000 cubic yards of waste

3.1.6.5 Packaging/Transportation Requirements

Under Alternative 5, the stabilized lime sludge and packaged waste materials (from the Active Fly Ash Pile, Inactive Fly Ash Disposal Area, and the Southfield) and the low-level waste (from the Sanitary Landfill) would be transported to an approved or licensed off-site facility for permanent disposal. The mixed and hazardous wastes from the Sanitary Landfill would be either treated and packaged for off-site disposal or packaged and shipped to a permitted TSD facility. Truck transport is currently considered the most viable means of shipment; however, rail transport offers several advantages over trucking, especially in the area of safety concerns.

For truck transport, it is assumed that all Operable Unit 2 wastes will be shipped as LSA waste. The actual packaging used for transport and disposal of the low-level radioactive waste should be water tight, certified for transport as LSA material (i.e., meet DOT packaging requirements), and be of suitable size. Materials would be packaged in LSA containers designed to contain a volume capacity of 4.1 cubic yards of waste. The density of the material would determine the actual cubic yards placed in the container. Each truck shipment would remove an average of 17 cubic yards of waste material, therefore, it would take approximately 14,500 truck shipments to dispose of the 246,500 cubic yards of waste material.

For rail shipment, it is also assumed that materials would be shipped off site as LSA. The solid wastes would be placed in 4.1-cubic-yard steel containers that would be palletized and loaded onto railcars. It is estimated that approximately 3700 railcars would be required to ship both the solid and stabilized (lime sludge) wastes.

The mixed and hazardous wastes from the Sanitary Landfill would be packaged and maintained with the applicable portions of 40CFR260, 40CFR262, and 40CFR264. The LSA waste would be packaged in accordance with 40CFR173, 49CFR178, 49CFR179, and 49CFR172.

A detailed engineering and cost analysis will be included in the Detailed Analysis of Alternatives to identify the most effective transport method.

Off-Site Disposal Options

The Nevada Test Site (NTS) is an approved DOE facility (although not permitted by EPA) and could serve as an off-site disposal facility for Operable Unit 2 wastes. The possibility of disposal at other disposal facilities (or proposed regional compact sites) located around the country were investigated also.

Several regional compacts have been formed in accordance with the Low-Level Radioactive Waste (LLRW) Policy Amendments Act of 1985, which provides improved procedures for the establishment and operation of regional disposal facilities for low-level radioactive waste. As stated in Section 3(a)(1) of the act, each state is responsible for providing [either by itself or in cooperation with other states (regional compact)], for the disposal of:

1. Low-level radioactive waste generated within the state (other than by the federal government) that consists of or contains Class A, B, or C radioactive waste as defined by section 61.55 of title 10, Code of Federal Regulations (10CFR61) as in effect on January 26, 1983.

2. Low-level radioactive waste described in (1) that is generated by the federal government, with exceptions (see next paragraph).

3. Waste described in (1) and (2) that is generated outside the state and accepted for disposal in accordance with Sections 5 or 6 of the LLRW Policy Amendments Act.

As stated in Section 3(a) (l) (B), the regional compacts (by law) are not responsible for providing for the disposal of low-level waste:

1. Generated or owned by DOE

2. Owned or generated by the U.S. Navy as a result of decommissioning of vessels of the U.S. Navy

3. Owned or generated as a result of any research, development, testing, or production of any atomic weapon. The federal government is responsible for the disposal of these wastes (Section [b] [1] of the LLRW Act).

The basic policy of the individual regional compacts concerning the acceptance of DOE-generated waste is stated in Table 3, page 48, of the CRC Handbook of Management of Radiation Protection Programs (Miller and Weidner 1986).

The Barnwell, South Carolina disposal facility and the Beatty, Nevada regional disposal facility are due to close at the end of 1992. The Hanford site will remain open. The commercial low-level waste burial site at Hanford does not accept DOE generated waste. The Hanford commercial burial site lies between two DOE radioactive waste burial sites that have been in use since 1944 and are still active today (Godbee et al. 1986).

Based on the above information, the only possible sites to be considered for the disposal of Operable Unit 2 wastes are NTS; the DOE waste burial sites at Hanford; Envirocare in Clive, Utah; and any other major DOE facility that provides for the disposal of low-level radioactive wastes. All other sites (regional compact sites) should be eliminated from further consideration for Alternative 5.

Presently, there are not any facilities that handle (process) mixed waste. Therefore, if any mixed waste is found in the Sanitary Landfill, it will be treated to meet land disposal restrictions prior to off-site disposal. A RCRA permit will be required for on-property treatment of the mixed waste.

3.1.6.6 Wastes Generated

The following wastes would be generated during the construction, excavation, treatment, and storage phases of this alternative:

- Water used in conjunction with hydraulic dredging and processing
- Low-level radioactive wastes in the forms of contaminated clothing, tools, and equipment which are generated during the construction and treatment phases
- Sanitary wastes

Disposal of the solid waste material would be in its associated solid waste unit. The waste water would be treated in the waste water treatment system.

3.1.6.7 Permits Required

Appropriate DOT, state, and local permits would be required along the off-site transport route, whether it is done by truck or rail. If RCRA wastes are found in an Operable Unit 2 waste site, they would require appropriate treatment and disposal in a permitted facility.

3.1.6.8 Transportation Regulations

Federal

The transportation of radioactive materials is subject to the regulations and jurisdiction of many federal, state, and local authorities. Three federal agencies have jurisdiction over shipments of radioactive materials:

- DOT has primary responsibility for issuing regulations for the safe transportation of all hazardous materials, including radioactive materials. DOT regulations apply to all shippers and carriers of radioactive materials except for shipments made on federal government vehicles.

- The Interstate Commerce Commission (ICC) regulates rates, charges, and conditions of truck and rail services operating in interstate commerce. The role of the ICC in interstate commerce is diminishing as a result of gradual deregulation of the transportation industry.

- DOE exerts operational control of the shipment activities of its "government-owned" contractors. Except for shipments made on government-owned vehicles, all DOE shipments are subject to DOT regulations. By DOE's own internal directives, the additional safety standards imposed by NRC also apply to DOE shipments, although the administrative requirements of NRC do not apply.

State and Local

Several state and local governments have issued regulations and passed statutes that impose restrictions on shipments of radioactive materials. The U.S. Congress has, by statute, given DOT preemptive regulatory authority over state and local jurisdictions in the matter of transportation of radioactive materials. In 1984, the U.S. Supreme Court upheld this preemptive authority in a case where the City of New York filed suit against DOT, challenging DOT's regulatory authority.

Although state or local regulations regarding the transport of radioactive materials are preempted by federal law (Federal Materials Transportation Act, Section 12, Title I, of Public Law 93-633), a state or local municipality has the option of filing with DOT for a nonpreemption determination (i.e., a waiver of preemption). A state or local requirement influencing the transport of radioactive

materials will cease to be preempted by federal law if, upon application for the nonpreemption determination, the secretary of DOT finds that the state or local ruling:

- Provides an equal or greater level of public safety than the Hazardous Materials Transportation act or regulations issued thereunder
- Does not burden commerce

Preemption determination, therefore, does offer the state or local area a recourse in the case of disputes over federal preemption.

3.2 SUMMARY

As a result of further refinement of the alternatives, the following list of technologies/process options have been retained and are considered applicable for the respective alternatives.

3.2.1 Sanitary Landfill

Alternative 1

- Capping (multilayer cap)
- Run-on/runoff control
- Monitoring

Alternative 2

- Subsurface flow control
- Groundwater/Wastewater treatment
- Capping (multilayer cap)
- Run-on/runoff control
- Monitoring

Alternative 3

- Interceptor trench
- Groundwater/Wastewater treatment
- Capping (multilayer cap)
- Run-on/runoff control
- Monitoring

Alternative 4

- Mechanical removal
- Magnetic/manual sorting
- Volume reduction by compaction
- Shredding/crushing/compaction of scrap material
- Segregation of waste into solid, low-level radioactive, hazardous, and mixed wastes
- On-property (thermal) treatment of hazardous and mixed wastes
- Subsurface flow control
- Treatment of perched groundwater and other wastewater
- Packaging
- On-property disposal in engineered disposal facility
- Monitoring

Alternative 5

- Mechanical removal
- Magnetic/manual sorting
- Volume reduction via compaction
- Shredding/crushing/compaction of scrap material
- Segregation of waste into solid, low-level radioactive, hazardous, and mixed wastes
- On-property (thermal) treatment of mixed wastes
- On-property (thermal) treatment of hazardous wastes or off-site shipping to TSD Facility
- Subsurface flow control
- Treatment of perched groundwater and other wastewater
- Packaging
- Off-site disposal at an approved (licensed) facility (for hazardous, solid, mixed, and low-level radioactive wastes)
- Truck or rail transport of waste

3.2.2 Lime Sludge Ponds

Alternative 1

- In situ stabilization of lime sludge
- Treatment of collected groundwater (perched)
- Capping (multilayer cap)
- Run-on/runoff control
- Monitoring

Alternative 2

- Subsurface flow control
- In situ stabilization of lime sludge
- Treatment of perched groundwater and other wastewater
- Capping (multilayer cap)
- Run-on/runoff control
- Monitoring

Alternative 3

- Interceptor trench
- In situ stabilization of lime sludge
- Treatment of perched groundwater and other wastewater
- Capping (multilayer cap)
- Run-on/runoff control
- Monitoring

Alternative 4

- Treatment of water collected from stabilization process
- Hydraulic removal and mechanical removal
- Subsurface flow control
- Treatment of perched groundwater and other wastewater
- Stabilization of lime sludge
- Packaging
- On-property disposal
- Monitoring

Alternative 5

- Treatment of water collected from stabilization process
- Hydraulic removal and mechanical removal
- Stabilization of lime sludge
- Subsurface flow control
- Treatment of perched groundwater and other wastewater
- Packaging
- Off-site disposal at an approved (licensed) facility

3.2.3. Inactive Fly Ash Disposal Area

Alternative 1

- Capping (multilayer cap)
- Run-on/runoff control
- Monitoring

Alternative 2

- Subsurface flow control
- Treatment of perched groundwater and other wastewater
- Capping (multilayer cap)
- Run-on/runoff control
- Monitoring

Alternative 3

- Intercepting trench
- Treatment of perched groundwater and other wastewater
- Capping (multilayer cap)
- Run-on/runoff control
- Monitoring

Alternative 4

- Mechanical removal
- Manual sorting
- Volume reduction via compaction
- Shredding/crushing/compaction of scrap material
- Subsurface flow control
- Treatment of perched groundwater and other wastewater
- Packaging
- On-property disposal
- Monitoring

Alternative 5

- Mechanical removal
- Manual sorting
- Volume reduction via compaction
- Shredding/crushing/compaction of scrap material
- Subsurface flow control
- Treatment of perched groundwater and other wastewater
- Packaging
- Off-site disposal at an approved (licensed) facility

3.2.4 Active Fly Ash Pile

Alternative 1

- Capping (multilayer cap)
- Run-on/runoff control
- Monitoring

Alternative 2

- Subsurface flow control
- Treatment of perched groundwater and other wastewater
- Capping (multilayer cap)
- Run-on/runoff control
- Monitoring

DRAFT

Alternative 3

- Intercepting trench
- Treatment of perched groundwater and other wastewater
- Capping (multilayer cap)
- Run-on/runoff control
- Monitoring

Alternative 4

- Mechanical removal
- Manual sorting
- Volume reduction via compaction
- Packaging
- On-property disposal
- Monitoring
- Subsurface flow control
- Treatment of perched groundwater and other wastewater

Alternative 5

- Mechanical removal
- Manual sorting
- Volume reduction via compaction
- Shredding/crushing/compaction of scrap material
- Packaging
- Off-site disposal at an approved (licensed) facility
- Subsurface flow control
- Treatment of perched groundwater and other wastewater

3.2.5 Southfield

Alternative 1

- Capping (multilayer cap)
- Run-on/runoff control
- Monitoring

Alternative 2

- Subsurface flow control
- Capping (multilayer cap)
- Run-on/runoff control
- Monitoring
- Treatment of perched groundwater and other wastewater

Alternative 3

- Intercepting trench
- Capping (multilayer cap)
- Run-on/runoff control
- Monitoring
- Treatment of perched groundwater and other wastewater

Alternative 4

- Mechanical removal
- Manual/magnetic sorting
- Volume reduction via compaction
- Shredding/crushing/compaction of scrap material
- Subsurface flow control
- Treatment of perched groundwater and other wastewater
- Packaging
- On-property disposal
- Monitoring

Alternative 5

- Mechanical removal
- Manual/magnetic sorting
- Volume reduction via compaction
- Shredding/crushing/compaction of scrap material
- Subsurface flow control
- Treatment of perched groundwater and other wastewater
- Packaging
- Off-site disposal at an approved (licensed) facility

DRAFT

4.0 ALTERNATIVE SCREENING METHODOLOGY

4.1 INTRODUCTION

Alternatives developed in the previous task are further defined to provide sufficient information to allow differentiation among alternatives with respect to evaluation criteria used during the alternative screening process. This refinement involves further definition with respect to volumes and areas of media and further definition of technology process options with respect to effectiveness, implementability, and cost. Specifically, the following parameters are developed for the various technology/process options used in an alternative:

- Fully defined size and configuration of on-site extraction and treatment systems and containment structures
- Established time frame in which treatment, containment, or removal goals can be achieved
- Rates or flows of treatment
- Special requirements for constructing treatment or containment technologies
- Distances for disposal technologies
- Necessary permits for off-site actions

The next step is to screen alternatives using the three broad criteria: effectiveness (short and long-term), implementability, and cost. It is important to note that comparisons during screening are usually made between similar alternatives, whereas comparisons during the detailed analysis differentiate among the entire range of alternatives. Figure 4-1 shows a comparison of the screening criteria to the nine evaluation criteria used in the detailed analysis. The three broad criteria are discussed in Sections 4.2.1, 4.2.2, and 4.2.3.

4.2 ALTERNATIVE EVALUATION PROCESS

4.2.1 Effectiveness Evaluation

Each alternative is evaluated for effectiveness in protecting human health and the environment. Protection of human health for on-site activities involves site workers and nearby residents in the short term, and nearby residents in the long term. Off-site activities will affect residents along the shipment routes in the short term. Additionally, alternatives are evaluated for effectiveness in

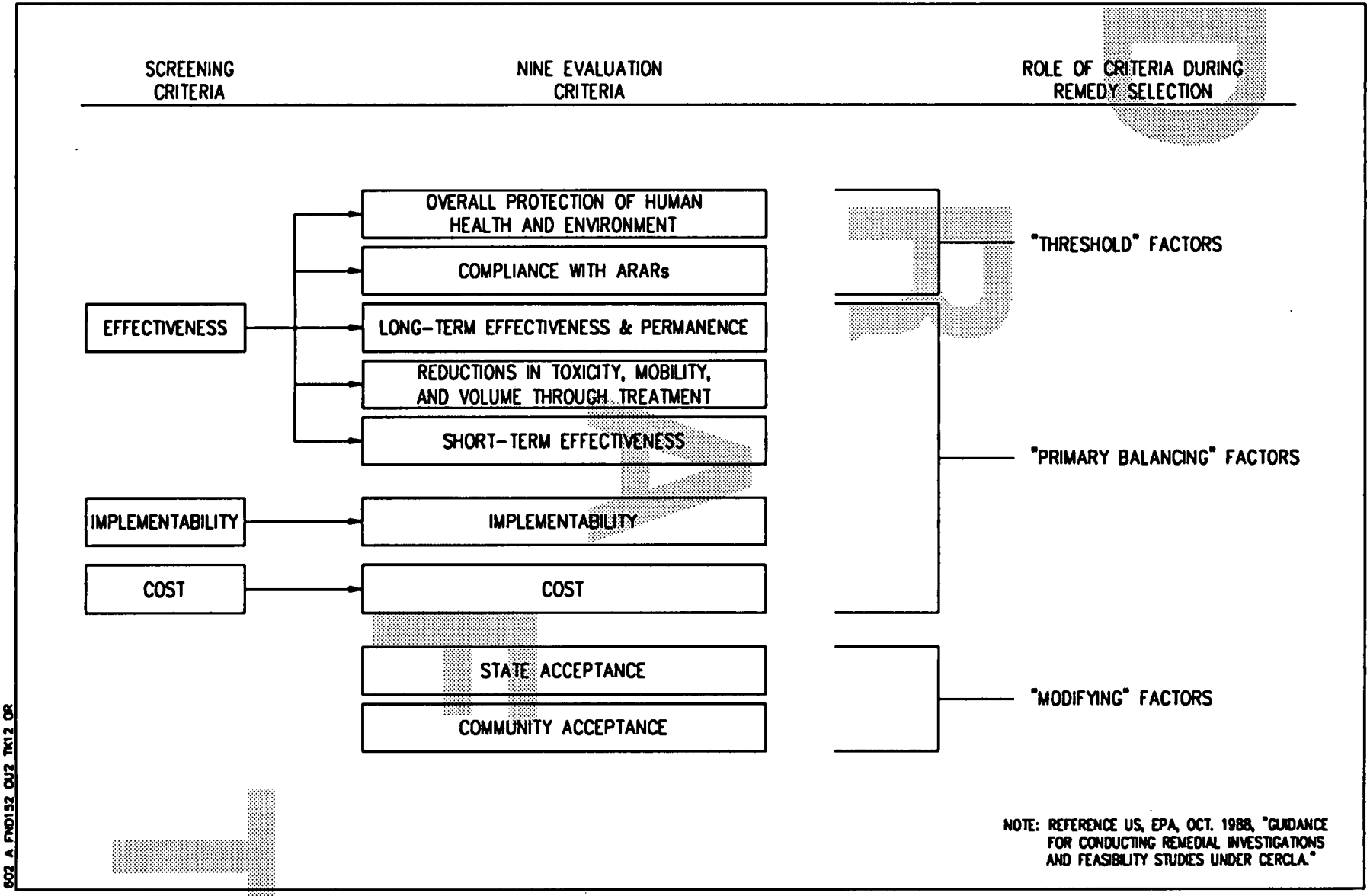

FIGURE 4-1. RELATIONSHIP OF SCREENING CRITERIA TO THE NINE EVALUATION CRITERIA.

reducing toxicity, mobility, and volume in both short-term and long-term time frames. Short term refers to the construction and implementation period, while long term refers to the period after the remedial action is complete.

4.2.2 Implementability Evaluation

Implementability refers to the technical and the administrative feasibility of constructing, operating, and maintaining a remedial action alternative. Technical feasibility is defined as the ability to construct, reliably operate, and meet technology-specific regulations for process options until a remedial action is complete. It also includes operation, maintenance, replacement, and monitoring of technical components of an alternative, if required, into the future (after the remedial action is complete). Administrative feasibility refers to: the ability to obtain approvals from other offices and agencies; the availability of treatment, storage, and disposal services and capacity; and the requirements for, and availability of, special equipment and technical specialists.

4.2.3 Cost Evaluation

Cost estimates for screening alternatives will typically be based on a variety of cost-estimating data. Cost estimates may include cost curves, generic unit costs, vendor information, conventional cost-estimating guides, and prior similar estimates as modified by site-specific information. Prior estimates, site-cost experience, and good engineering judgments are needed to identify those items in each alternative that will control these comparative estimates. Cost estimates for items common to all alternatives or indirect costs (engineering, financial, supervision, outside contractor support, contingencies) do not normally warrant substantial effort during the alternative screening phase. Both capital and operations and maintenance (O & M) costs are considered, where appropriate, during the screening of alternatives. The evaluation also includes those O & M costs that may continue beyond the completion of initial remedial action. In addition, potential future remedial action costs are considered during alternative screening to the extent that they can be defined. Present worth analyses are used during alternative screening to evaluate expenditures that occur over different time periods. Discounting all costs to a common base year allows the costs for different remedial action alternatives to be compared on the basis of a single figure for each alternative. The present worth and capital cost for each alternative is indicated in Section 5.0. The present worth is based on a discount rate of 5 percent and a 30 year period of performance.

4.2.4 Innovative Technologies

Technologies are classified as innovative if they are fully developed but lack sufficient cost or performance data for routine use at cleanup sites. In the case of Operable Unit 2, none of the technologies are considered innovative; they have been widely used in industry.

4.3 COMPLIANCE WITH ARARs

CERCLA requires that remedial actions achieve a level of cleanup or standard of control of hazardous substances, pollutants, or contaminants that, as a minimum, assures the protection of human health and the environment with respect to those hazardous substances, pollutants, and contaminants that will remain on site. CERCLA further specifies that remedial actions meet any federal standards, requirements, criteria, or limitations that are determined to be legally applicable or relevant and appropriate requirements (ARARs).

ARARs are classified as chemical-specific, location-specific, or action-specific. Chemical-specific ARARs address the acceptable amount or concentration of a specific pollutant that may be found in or discharged to soil, water, and air. Location-specific ARARs are based on the specific setting and nature of the site; action-specific ARARs relate to technology or activity-based requirements or limitations on the specific response actions taken with respect to the type of wastes. Thus, a determination of the potential ARARs for proposed actions at a site is based on factors specific to that site and to a specific proposed action.

Appendix A contains a general list of potential ARARs and requirements to be considered. The potential ARARs are based on the nature of the contamination, the location of the site, and the general scope of the identified remedial action alternatives.

4.4 LAND DISPOSAL RESTRICTIONS

Since the proposed ARARs for Operable Unit 2 consider Subtitle C of RCRA, regulations for land disposal restrictions (LDR) will be complied with regard to onsite or offsite disposal for those Sanitary Landfill wastes classified as RCRA hazardous.

DRAFT

5.0

5.0 SCREENING OF ALTERNATIVES

In this section, alternatives are screened against three general criteria: effectiveness, implementability, and cost. Each alternative is examined for each of the solid waste units.

The alternatives were assigned numerical values of one through five. A ranking of "one" indicates a particular alternative is least favorable for a particular criterion (e.g., short-term environmental protection or constructibility), while "five" represents an alternative that is most favorable relative to other alternatives. Section 5.7 presents a summary of the screening along with tables that reflect the relative ranking of the alternatives.

The cost estimates for each alternative were performed in accordance with the cost evaluation of Section 4.2.3.

5.1 SANITARY LANDFILL

5.1.1 Alternative 0: No Action

5.1.1.1 Effectiveness

In the short term, this alternative poses little risk to workers and to the public living immediately off property since all material remains in place and is not disturbed. During the remedial action, property access restrictions are assumed to exist and overall risks are considered low. Long-term public health and environmental protection are ranked unfavorably because the alternative does not mitigate the spread of contamination.

5.1.1.2 Implementability

This alternative is implementable; the current situation at the site represents implementation of this alternative.

5.1.1.3 Cost

The present worth of this alternative for this waste area is $ 3,197,480. There are no capital costs associated with the implementation of this alternative.

DRAFT

5.1.2 Alternative 1: Nonremoval - Cap

5.1.2.1 Effectiveness

Compared to Alternatives 2 and 3, this alternative is favorable for short-term public health because there would be less potential for exposure to contamination during construction. For short-term environmental protection, Alternative 1 is ranked evenly with Alternatives 2 and 3 since contaminant concentrations in the perched groundwater are low. The same reasoning applies to long-term environmental protection. Alternative 1 would not reduce the toxicity or volume of the waste itself; however, it would reduce the mobility of contaminants by reducing infiltration of precipitation to the waste.

5.1.2.2 Implementability

Overall, this alternative ranks slightly higher in this category than Alternatives 2 and 3 because its implementation involves less construction and operation. A cap is relatively easy to construct; the technology, equipment, manpower, and materials exist and are relatively available. It is also reliable, and test methods exist to verify adequate construction.

Normally, caps require periodic maintenance; if left unattended, natural biological succession would take place on the cap, and shrubs and trees would take root. Eventually, as roots penetrate the clay liner, insects and small burrowing animals would reach the waste. This opens pathways for precipitation to infiltrate first the cap liner and subsequently the waste itself. Leachate would form and eventually reach the Great Miami Aquifer. Periodic maintenance would involve regrading the cap and clearing roots to prevent root intrusion into the clay liner and waste.

Research was recently conducted that involved the placement of a biointrusion barrier (consisting of a two foot layer of rip-rap) into caps to improve their long-term performance.

Since activity associated with this alternative is on property, agency approval is less likely to be a problem than for off-site activities. This alternative may require relocation of surface drainageways, resulting in some on-property environmental impacts. Administrative approvals are not required, but the substantive requirements of ARARs will be implemented through decision documents.

5.1.2.3 Cost

The present worth of this alternative for this waste area is $ 10,649,422. Capital costs associated with the implementation of this alternative are $ 7,504,132.

5.1.3 Alternative 2: Nonremoval - Slurry Wall, Groundwater Pump and Treatment, and Cap

5.1.3.1 Effectiveness

For short-term and long-term public health and environmental protection, both Alternatives 2 and 3 were ranked even, the only difference between them being the method used to extract groundwater. Alternative 1 is ranked as equal to Alternative 2 and 3, because concentrations of contaminants are low in perched groundwater near the Sanitary Landfill.

5.1.3.2 Implementability

In addition to capping, this alternative involves groundwater extraction and treatment. This alternative is constructible; the technologies exist and manpower and materials are available. This alternative is considered less reliable than Alternative 3, because the wellpoint system requires consistent operation while a trench relies on gravity. For the same reason, more maintenance is required for Alternative 2.

Agency approval would be needed to discharge treated water off property. Other activities associated with this alternative would occur on property and, therefore, would not require agency approvals. On-property activities require implementation of substantive requirements of ARARs. Alternatives 2 and 3 rank equally with regard to agency approval. The same considerations with regard to capping (Alternative 1) apply to Alternative 2.

5.1.3.3 Cost

The present worth of this alternative for this waste area is $ 14,997,881. Capital costs associated with the implementation of this alternative are $ 10,563,223.

5.1.4 Alternative 3: Nonremoval - Intercepting Trench, Groundwater Treatment, and Cap

5.1.4.1 Effectiveness

For short-term and long-term public health and environmental protection, both Alternatives 2 and 3 were ranked even, the only difference between them being the method used to extract groundwater.

DRAFT

Alternative 1 is ranked as equal to Alternative 2 and 3, because concentrations of contaminants are low in perched groundwater near the Sanitary Landfill.

5.1.4.2 Implementability

As described earlier in Section 5.1.3.2, Alternative 3 is easier to implement than Alternative 2 because Alternative 3 is considered more reliable and requires less maintenance. Alternatives 2 and 3 rank equally with regard to agency approval.

5.1.4.3 Cost

The present worth of this alternative for this waste area is $ 13,940,612. Capital costs associated with the implementation of this alternative are $ 9,819,445.

5.1.5 Alternative 4: Removal - Bulk Packaging, Perched Groundwater Removal, and On-Property Disposal

5.1.5.1 Effectiveness

The level of effectiveness for short-term public health and environmental protection of Alternative 4 is low for the Sanitary Landfill, because workers and the public immediately off property could be exposed to hazardous and mixed wastes and low-level radioactive waste during removal, treatment, and handling. Alternative 4 ranks higher than Alternative 5, because Alternative 5 requires that the waste be transported off site for disposal.

The level of effectiveness of Alternative 4 during the long term for public health and environmental protection is somewhat high, because the material would be isolated from the public and the potential for contaminant movement to groundwater is less. A clay cap of low permeability on the on-property disposal facility would greatly reduce the potential for the migration of contaminants to the air or groundwater. The hazardous and mixed wastes would be treated, prior to on-property disposal, to remove harmful, organic contaminants. Radioactive isotopes would remain in the resultant wastes. Alternative 5 is ranked as even with Alternative 4 because proposed off-site disposal facilities are comparable with those planned for on-property disposal. The volume or toxicity would not be significantly reduced by this alternative.

5.1.5.2 Implementability

Construction of an on-property disposal facility to house the waste is possible with existing technologies and techniques. Necessary items such as manpower, technology, equipment, and

materials are available. Process technologies and equipment are considered technically feasible and operationally reliable. Periodic maintenance and inspection would be required. The on-property disposal facility would be subject to degradation (from the weather, deep-rooted vegetation, and burrowing animals and insects) and may require long-term maintenance. However, as described in Section 5.1.2.2, long-term performance of an on-property facility may be improved by the addition of a biointrusion barrier to the cap.

No major administrative problems are anticipated and no permits would be required to dispose of the wastes classified as solid waste and low-level radioactive waste. Permits to treat and dispose of mixed and hazardous wastes would be required (land disposal restrictions); treatment and disposal of the hazardous and mixed wastes could be expected to result in major administrative problems. Public acceptance is anticipated to be more favorable for Alternative 4 for solid waste material. Major administrative and public acceptance problems are anticipated for Alternative 5 due to the transporting of wastes across many states. Alternative 4 ranks slightly higher than Alternative 5 as a result of these considerations. No special engineering or equipment is required for Alternative 4. This technology is based on standard engineering procedures and methods.

5.1.5.3 Cost

The present worth of this alternative for this waste area is $ 10,827,330. Capital costs associated with the implementation of this alternative are $ 7,706,712.

5.1.6 Alternative 5: Removal - Bulk Packaging, Perched Groundwater Removal, and Off-Site Disposal

5.1.6.1 Effectiveness

The level of effectiveness for short-term public health and environmental protection for Alternative 5 is low for this waste unit, because workers could be exposed to hazardous and mixed wastes, as well as low-level radioactive wastes during removal, treatment, and handling. There would be less impact from construction for Alternative 5 than Alternative 4, because only temporary on-property storage is required for Alternative 5. However, Alternative 4 is ranked slightly higher because off-site disposal would require transport across several states and would require additional handling.

The level of effectiveness for Alternative 5 during the long term, for public health and environmental protection is moderately high, because the waste material would be completely removed

from the property and placed at an approved or licensed off-site facility. The hazardous waste would be either treated on-property and packaged for off-site disposal or packaged and transported to a TSD facility. The low-level radioactive waste and solid waste would be disposed of at the approved or licensed off-site facility. Therefore, the waste would be isolated from the public, and the potential for contaminant migration to groundwater is comparable to that of Alternative 4. Alternative 5 ranks as even with Alternative 4 with regard to long-term effectiveness. The volume or toxicity of the waste material would not be significantly reduced by either Alternative 5 or 4.

5.1.6.2 Implementability

Construction of a temporary storage structure to house the waste can be accomplished with existing technologies. Alternative 5 requires less construction than Alternative 4, since Alternative 4 requires construction of a permanent on-property facility to house wastes from all the Operable Unit 2 waste units. Necessary items such as manpower, technology, equipment, and materials are available. Process technologies and equipment for Alternatives 4 and 5 are considered technically feasible and operationally reliable. Periodic maintenance and inspection would be required for Alternative 5, but not on a long-term basis as required for Alternative 4. Major administrative problems are anticipated for Alternative 5, as both DOT and local permits are required for off-site transport. Public acceptance problems are also anticipated for Alternative 5. Although major administrative problems are anticipated for Alternative 4, Alternative 5 ranks lower because it requires the same permits as those required by Alternative 4, in addition to DOT permits and public acceptance.

No special engineering or equipment is required for Alternative 5. This technology is based on standard engineering procedures and methods. Alternatives 4 and 5 rank the same for special engineering.

5.1.6.3 Cost

Using truck transportation, the present worth of this alternative for this waste area is $ 98,239,729; capital costs associated with the implementation of this alternative are $ 65,379,319. Using rail transportation, the present worth of this alternative for this waste area is $ 89,769,930; capital costs associated with the implementation of this alternative are $ 63,546,643.

5.2 LIME SLUDGE PONDS

5.2.1 Alternative 0: No Action

5.2.1.1 Effectiveness

In the short term, this alternative poses little risk to workers and the public living immediately off property, because all material remains in place and is not disturbed. During the remedial action, property access restrictions are assumed to exist, and overall risks are considered low.

Long-term public health and environmental protections are ranked unfavorably because this alternative does not provide for the mitigation of the spread of existing contamination.

5.2.1.2 Implementability

This alternative is implementable; the current situation at the FMPC represents implementation of this alternative.

5.2.1.3 Cost

The present worth of this alternative for this waste area is $ 3,197,480. There are no capital costs associated with the implementation of this alternative.

5.2.2 Alternative 1: Nonremoval - Cap

5.2.2.1 Effectiveness

Compared to Alternatives 2 and 3, this alternative is favorable for short-term public health due to less potential for exposure to contamination during construction. For short-term environmental protection, Alternative 1 is ranked as even with Alternatives 2 and 3, because contaminant concentrations in the perched groundwater are low. The same reasoning applies to long-term environmental protection. Alternative 1 would not reduce the toxicity or volume of the waste itself; however, it would reduce the mobility of contaminants by reducing infiltration of precipitation to the waste.

5.2.2.2 Implementability

Overall, this alternative ranks slightly higher in this category than Alternatives 2 and 3, because Alternative 1 involves less construction and less operation to implement. A cap is relatively easy to construct; the technology, equipment, manpower, and materials exist and are relatively available.

It is also reliable, and test methods exist to verify adequate construction. Additional considerations include future maintenance of the cap. This was described earlier in Section 5.1.2.2 for the Sanitary Landfill and is also applicable to the Lime Sludge Ponds.

5.2.2.3 Cost

The present worth of this alternative for this waste area is $ 16,609,103. Capital costs associated with the implementation of this alternative are $ 11,776,143.

5.2.3 Alternative 2: Nonremoval - Slurry Wall, Groundwater Pump and Treatment, and Cap

5.2.3.1 Effectiveness

For short-term and long-term public health and environmental protection, both Alternatives 2 and 3 were ranked as even, the only difference between them being the method used to extract groundwater. Alternative 1 is ranked as equal to Alternative 2 and 3, because concentrations of contaminants are low in perched groundwater near the Lime Sludge Ponds.

5.2.3.2 Implementability

As described earlier in Section 5.1.3.2, Alternative 3 is easier to implement than Alternative 2, because Alternative 3 is considered more reliable and requires less maintenance. Alternatives 2 and 3 rank as equals with regard to agency approval.

5.2.3.3 Cost

The present worth of this alternative for this waste area is $ 19,875,616. Capital costs associated with the implementation of this alternative are $ 14,092,051.

5.2.4 Alternative 3: Nonremoval - Intercepting Trench, Groundwater Treatment, and Cap

5.2.4.1 Effectiveness

For short-term and long-term public health and environmental protection, both Alternatives 2 and 3 were ranked as even, the only difference between them being the method used to extract groundwater. Alternative 1 is ranked as equal to Alternative 2 and 3, because concentrations of contaminants are low in perched groundwater near the Lime Sludge Ponds.

5.2.4.2 Implementability

As described earlier in Section 5.1.3.2, Alternative 3 is easier to implement than Alternative 2, because Alternative 3 is considered more reliable and requires less maintenance. Alternatives 2 and 3 rank as equals with regard to agency approval.

5.2.4.3 Cost

The present worth of this alternative for this waste area is $ 18,314, 316. Capital costs associated with the implementation of this alternative are $ 12,985,116.

5.2.5 Alternative 4: Removal - Bulk Packaging, Perched Groundwater Removal, and On-Property Disposal

5.2.5.1 Effectiveness

The level of effectiveness for the short-term public health and environmental protection of Alternative 4 is moderately low for the Lime Sludge Ponds, because workers could be exposed to waste materials during removal of the lime sludge and subsequent stabilization/solidification of the waste. Because the waste is isolated from the public and from waste stabilization/solidification and disposal would be in an on-property facility, the mobility of contaminants would be reduced. The stabilized sludge would be packaged and placed in an on-property facility which would have an impermeable clay cap. Therefore, long-term effectiveness would be relatively high. Stabilization of the Lime Sludge Ponds' waste would offer the potential reduction of waste mobility, but the volume and toxicity would not be reduced.

5.2.5.2 Implementability

Construction of an on-property disposal facility to house the waste is possible with existing technologies and techniques. Necessary items such as manpower, technology, equipment, and materials are available. Process technologies and equipment to process water and stabilize sludge are considered technically feasible and operationally reliable. Periodic maintenance and inspection would be required. The on-property facility would be subject to degradation (from the weather, deep-rooted vegetation, and burrowing animals and insects) and could require long-term maintenance. As described earlier, long-term performance may be enhanced by the addition of a biointrusion barrier. The equipment used in the stabilization process would require short-term maintenance. No major administrative problems are anticipated, no permits are required, and public acceptance is anticipated to be more favorable for Alternative 4. Major administrative and public-acceptance problems are anticipated for implementation of Alternative 5, because the wastes

would have to be transported across many states. Alternative 4 ranks higher than Alternative 5 because of these considerations. No special engineering or equipment is required. This technology is based on standard engineering procedures and methods.

5.2.5.3 Cost

The present worth of this alternative for this waste area is $ 52,326,644. Capital costs associated with the implementation of this alternative are $ 35,178,943.

5.2.6 Alternative 5: Removal - Bulk Packaging, Perched Groundwater Removal, and Off-Site Disposal

5.2.6.1 Effectiveness

The level of effectiveness for short-term public health and environmental protection for Alternative 5 is low for the Lime Sludge Ponds, because workers could be exposed to waste materials during removal of perched groundwater and sludge. Alternative 4 ranks higher on short-term effectiveness, because the waste would be disposed of on property after its removal from the waste unit. With Alternative 5, the waste would be transported across several states for permanent storage.

The level of effectiveness during the long term for Alternative 5 for public health and environmental protection is relatively high, because the waste material would be completely removed from the property and placed at an approved or licensed off-site facility. Therefore, the waste would be isolated from the public, and the potential for contaminant migration to groundwater is comparable to that of Alternative 4. Alternative 5 ranks as even with Alternative 4 with regard to long-term effectiveness. Stabilization of the Lime Sludge Ponds' waste offers potential reduction of waste mobility. The volume and toxicity would not be reduced in either Alternative 4 or 5.

5.2.6.2 Implementability

Construction of a temporary storage structure to house the waste is possible with existing technologies and techniques. Alternative 5 requires less construction than Alternative 4, since Alternative 4 requires a permanent on-property structure. Necessary items such as manpower, technology, equipment, and materials are available. Process technologies and equipment for Alternatives 4 and 5 are considered technically feasible and operationally reliable. Periodic maintenance and inspection would be required for Alternative 5, but not on a long-term basis as required for Alternative 4. Major administrative problems are anticipated for Alternative 5, as both

DOT and local permits are required for off-site transport; public acceptance problems are also anticipated. No major administrative problems are anticipated for Alternative 4, because all activities would be on property and no special permits are anticipated to be required. Alternative 4 ranks higher than Alternative 5 because of these considerations. No special engineering or equipment is required for Alternative 5. This technology is based on standard engineering procedures and methods. Alternatives 4 and 5 rank the same for special engineering.

5.2.6.3 Cost

The present worth analysis of this alternative for this waste area is $ 195,675,453 for truck transportation; the capital costs associated with the implementation of this alternative are $ 130,872,387. For rail transportation, the present worth analysis of this alternative for this waste area is $ 138,807,277; capital costs associated with the implementation of this alternative are $ 92,108,912.

5.3 INACTIVE FLY ASH DISPOSAL AREA

5.3.1 Alternative 0: No Action

5.3.1.1 Effectiveness

In the short term, this alternative may contribute to the concentrations of constituents of concern in surface water runoff and sediment under current land-use conditions. Long-term public health and environmental protection are less favorable than the short-term situation, because this alternative does not provide for mitigating the spread of existing contamination.

5.3.1.2 Implementability

This alternative is implementable; the current situation at the FMPC represents implementation of this alternative.

5.3.1.3 Cost

The present worth of this alternative for this waste area is $ 3,197,480. There are no capital costs associated with the implementation of this alternative.

5.3.2 Alternative 1: Nonremoval - Cap

5.3.2.1 Effectiveness

For the Inactive Fly Ash Disposal Area, this alternative is as effective as Alternatives 2 and 3, because the fly ash is in direct contact with the sand layer characterizing the uppermost portion of the Great Miami Aquifer; little or no overburden exists underneath portions of this solid waste unit. However, the waste is not contacted by the groundwater itself, and it remains well above the water table of the Great Miami Aquifer. For capping alone, similar comparisons can be made to the Sanitary Landfill and Lime Sludge Ponds regarding long- and short-term effectiveness..

5.3.2.2 Implementability

Alternative 1 ranks higher than Alternatives 2 and 3 in this category, because effective implementation of Alternatives 2 or 3 are likely to be difficult for this waste unit. Because the waste has direct contact with the Great Miami Aquifer underlying the glacial overburden, contamination can infiltrate directly into the Great Miami Aquifer and bypass the perched groundwater extraction systems featured in Alternatives 2 and 3. Alternative 1 can be implemented for the Inactive Fly Ash Disposal Area.

5.3.2.3 Cost

The present worth of this alternative for this waste area is $ 14,878,451. Capital costs associated with the implementation of this alternative are $ 10,363,719.

5.3.3 Alternative 2: Nonremoval - Slurry Wall, Groundwater Pump and Treatment, and Cap

5.3.3.1 Effectiveness

As stated earlier in Section 5.3.2.1, Alternatives 2 and 3 are no more effective than only capping the Inactive Fly Ash Disposal Area, given that direct contact exists between the waste unit and the Great Miami Aquifer above the water table. Perched water removal cannot prevent migration of contaminants to the Great Miami Aquifer.

5.3.3.2 Implementability

Alternatives 2 and 3 are difficult to implement effectively. Because the waste has direct contact with the Great Miami Aquifer underlying the glacial overburden, contamination can directly

infiltrate the Great Miami Aquifer and bypass the perched groundwater extraction system featured in Alternatives 2 and 3.

5.3.3.3 Cost

The present worth analysis of this alternative for this waste area is $ 15,918,725. Capital costs associated with the implementation of this alternative are $ 11,088,131.

5.3.4 Alternative 3: Nonremoval - Intercepting Trench, Groundwater Treatment, and Cap

5.3.4.1 Effectiveness

As stated earlier in Section 5.3.2.1, Alternatives 2 and 3 are no more effective than only capping the Inactive Fly Ash Disposal Area, given that direct contact exists between the waste unit and Great Miami Aquifer above the water table.

5.3.4.2 Implementability

Alternatives 2 and 3 are difficult to implement effectively. Because the waste has direct contact with the Great Miami Aquifer underlying the glacial overburden, contamination can directly infiltrate the Great Miami Aquifer and bypass the perched groundwater extraction system featured in Alternatives 2 and 3.

5.3.4.3 Cost

The present worth analysis of this alternative for this waste area is $ 73,471,738. Capital costs associated with the implementation of this alternative are $ 51,176,632.

5.3.5 Alternative 4: Removal - Bulk Packaging, Perched Groundwater Removal, and On-Property Disposal

5.3.5.1 Effectiveness

The level of effectiveness for short-term public health and environmental protection of Alternative 4 is low for the Inactive Fly Ash Disposal Area, because workers and the public living immediately off property could be exposed to fugitive emissions.

The level of effectiveness of Alternative 4 for long-term public health and environmental protection is somewhat high, because the material would be isolated from the public and the potential for contaminant movement to groundwater is less. Alternative 5 is ranked even with Alternative 4,

because proposed off-site disposal facilities are comparable with those planned for on-property disposal. The volume or toxicity is not significantly reduced by this alternative.

5.3.5.2 Implementability

Construction of the on-property disposal facility to house the waste is possible with existing technologies and techniques. Necessary items such as manpower, technology, equipment, and materials are available. Process technologies and equipment are considered technically feasible and operationally reliable. Periodic maintenance and inspection would be required. The facility would be subject to degradation (from the weather, deep-rooted vegetation, and burrowing animals and insects) and may require long-term maintenance. As described earlier, long-term performance may be enhanced by the addition of a biointrusion barrier. No major administrative problems are anticipated, no permits are required, and public acceptance is anticipated to be more favorable for Alternative 4. Major administrative problems and public resistance are anticipated for Alternative 5 because the wastes would have to be transported across many states. Alternative 4 ranks higher than Alternative 5 as a result of these considerations. No special engineering or equipment would be required. This technology is based on standard engineering procedures and methods.

5.3.5.3 Costs

The present worth of this alternative for this waste area is $ 8,205,049. Capital costs associated with the implementation of this alternative are $ 5,693,644.

5.3.6 Alternative 5: Removal - Bulk Packaging, Perched Groundwater Removal, and Off-Site Disposal

5.3.6.1 Effectiveness

The level of effectiveness for short-term public health and environmental protection for Alternative 5 is low for this waste unit, since workers and the public living immediately off property could be exposed to fugitive emissions. There would be less impact from construction for Alternative 5 than Alternative 4, since only temporary on-property storage is required for Alternative 5.

The level of effectiveness for Alternative 5, during the long term, for public health and environmental protection is relatively high, because the waste material would be completely removed from the property and placed at an approved or licensed off-site facility. Therefore, the waste would be isolated from the public, and the potential for contaminant migration to

groundwater is comparable to that of Alternative 4. Alternative 5 ranks even with Alternative 4 with regard to long-term effectiveness. The volume or toxicity of the waste material would not be significantly reduced by either Alternative 5 or 4.

5.3.6.2 Implementability

Construction of a temporary storage structure to house the waste is possible with existing technologies and techniques. Alternative 5 requires less construction than Alternative 4, since the latter alternative requires a permanent on-property facility. Necessary items such as manpower, technology, equipment, and materials are available. Process technologies and equipment for Alternative 4 and 5 are considered technically feasible and operationally reliable. Periodic maintenance and inspection would be required for Alternative 5, but not on a long-term basis as required for Alternative 4. Major administrative problems are anticipated for Alternative 5, and both DOT and local permits would be required for off-site transport. Public acceptance problems are also anticipated for Alternative 5. No major administrative problems are anticipated for Alternative 4, since all activities would be on property and no special permits are anticipated to be required. Alternative 4 ranks higher than Alternative 5 as a result of these considerations. No special engineering or equipment is required for Alternative 5. This technology is based on standard engineering procedures and methods. Alternatives 4 and 5 rank the same for special engineering.

5.3.6.3 Cost

The present worth of this waste area is $ 241,691,459 for truck transportation, and the associated capital costs for the implementation of this alternative are $ 161,436,202. For rail transportation, the present worth of this alternative for this waste area is $ 168,703,409; the capital costs associated with the implementation of this alternative are $ 105,854,588.

5.4 ACTIVE FLY ASH PILE

5.4.1 Alternative 0: No Action

5.4.1.1 Effectiveness

In the short term, this alternative may contribute to the concentrations of constituents of concern in surface water runoff and sediment under current land-use conditions. Long-term public health and environmental protection are less favorable than the short-term situation, because this alternative does not provide for mitigating the spread of existing contamination.

5.4.1.2 Implementability

This alternative is implementable; the current situation at the property represents implementation of this alternative.

5.4.1.3 Cost

The present worth of this alternative for this waste area is $ 3,197,480. There are no capital costs associated with the implementation of this alternative.

5.4.2 Alternative 1: Nonremoval - Cap

5.4.2.1 Effectiveness

This alternative does not significantly differ in effectiveness when compared to Alternatives 2 and 3 for the Active Fly Ash Pile. Boring logs from wells placed during the RI indicate a five-foot layer of silts directly below the majority of the Active Fly Ash Pile. The silt layer pinches out toward the south of the Active Fly Ash Pile. The south end of the Active Fly Ash Pile is in direct contact with the weathered portion of the glacial overburden. The boring log from Well 1048 indicates a 1-foot thick sand lens approximately 12 feet below grade. The sand lens appears to be continuous under the northern half of the Active Fly Ash Pile as depicted in the glacial overburden fence diagram contained in the Remedial Investigation Report for Operable Unit 2 (ASI/IT 1990b). The sand lens also appears to be exposed at the southeast slope of the Inactive Fly Ash Disposal Area, providing a drainageway for any water within the sand lens. Therefore, Alternative 1 would be as effective as Alternative 2 and 3 because of a lack of perched water zones in the vicinity of the Active Fly Ash Pile.

5.4.2.2 Implementability

Capping the Active Fly Ash Pile is implementable. It is comparable to capping other solid waste units in Operable Unit 2.

5.4.2.3 Cost

The present worth of this alternative for this waste area is $ 19,776,487. Capital costs associated with the implementation of this alternative are $ 13,673,113.

DRAFT

5.4.3 Alternative 2: Nonremoval - Slurry Wall, Groundwater Pump and Treatment, and Cap

5.4.3.1 Effectiveness

Alternatives 2 and 3 do not significantly differ with regard to effectiveness. There is no evidence of direct waste contact with the Great Miami Aquifer, and there is a layer of glacial overburden underlying the Active Fly Ash Pile. As stated in Section 5.4.2.1, the lack of perched water zones in the vicinity of the Active Fly Ash Pile limits the effectiveness of this alternative.

5.4.3.2 Implementability

Alternatives 2 and 3 would be difficult to implement for the Active Fly Ash Pile due to the limited thickness of the sand lenses and the low concentration of contaminants in the perched water.

5.4.3.3 Cost

The present worth of this alternative for this waste area is $ 21,043,361. Capital costs associated with the implementation of this alternative are $ 14,548,157.

5.4.4 Alternative 3: Nonremoval - Intercepting Trench, Groundwater Treatment, and Cap

5.4.4.1 Effectiveness

Alternatives 2 and 3 are not significantly different with regard to effectiveness. There is no evidence of direct waste contact with the Great Miami Aquifer, and there is a layer of glacial overburden underlying the Active Fly Ash Pile. As previously stated, this alternative is of limited effectiveness.

5.4.4.2 Implementability

Alternatives 2 and 3 would be difficult to implement for the Active Fly Ash Pile for the reasons stated in Section 5.4.3.2.

5.4.4.3 Cost

The present worth of this alternative for this waste area is $ 20,830,491. Capital costs associated with the implementation of this alternative are $ 14,401,127.

DRAFT

5.4.5 Alternative 4: Removal - Bulk Packaging, Perched Groundwater Removal, and On-Property Disposal

5.4.5.1 Effectiveness

The level of effectiveness for short-term public health and environmental protection of Alternative 4 would be low for the Active Fly Ash Pile, since workers and the public living immediately off property could be exposed to fugitive emissions during removal, treatment, and handling.

The level of effectiveness of Alternative 4 for long-term public health and environmental protection is somewhat high, since the material will be isolated from the public and the potential for contaminant movement to groundwater is less. Alternative 5 is ranked as even with Alternative 4, because proposed off-site disposal facilities are comparable with those planned for on-property disposal. Volume or toxicity would not be significantly reduced by this alternative.

5.4.5.2 Implementability

Construction of an on-property disposal facility to house the waste is possible with existing technologies and techniques. Necessary manpower, technology, equipment, and materials are available. Process technologies and equipment are considered technically feasible and operationally reliable. Periodic maintenance and inspection would be required. The facility would be subject to degradation (from the weather, deep-rooted vegetation, and burrowing animals and insects) and may require long-term maintenance. As stated earlier, long-term performance may be enhanced by the additions of a biointrusion barrier. No major administrative problems are anticipated, no permits are required, and public acceptance is anticipated to be more favorable for Alternative 4. Major administrative and public acceptance problems are anticipated for Alternative 5 because the wastes would have to be transported across many states. Therefore, Alternative 4 ranks higher than Alternative 5 as a result of these considerations. No special engineering or equipment would be required. This technology is based on standard engineering procedures and methods.

5.4.5.3 Costs

The present worth of this alternative for this waste area is $ 6,717,452. Capital costs associated with the implementation of this alternative are $ 4,663,686.

5.4.6 Alternative 5: Removal - Bulk Packaging, Perched Groundwater Removal, and Off-Site Disposal

5.4.6.1 Effectiveness

The level of effectiveness for short-term public health and environmental protection for Alternative 5 is low for this waste unit, because workers and the public living immediately off property could be exposed to fugitive emissions. There would be less impact from construction for Alternative 5 than Alternative 4, because only temporary on-property storage is required for Alternative 5.

The level of effectiveness for Alternative 5, during the long term, for public health and environmental protection is relatively high, because the waste material would be completely removed from the property and placed at an approved or licensed off-site facility. Therefore, the waste would be isolated from the public and the potential for contaminant migration to groundwater is comparable to that of Alternative 4. Alternative 5 ranks as even with Alternative 4 with regard to long-term effectiveness. The volume or toxicity of the waste material would not be significantly reduced by either Alternative 5 or 4.

5.4.6.2 Implementability

Construction of a temporary storage structure to house the waste is possible with existing technologies and techniques. Alternative 5 requires less construction than Alternative 4, since Alternative 4 requires a permanent on-property facility. Necessary items such as manpower, technology, equipment, and materials are available. The process technologies and equipment for Alternative 4 and 5 are considered technically feasible and operationally reliable. Periodic maintenance and inspection are required for Alternative 5, but not on the long-term basis required for Alternative 4. Major administrative problems are anticipated for Alternative 5, and both DOT and local permits are required for off-site transport. Public acceptance problems are also anticipated for Alternative 5. No major administrative problems are anticipated for Alternative 4, because all activities will be on property and no special permits are anticipated to be required. Alternative 4 ranks higher than Alternative 5 as a result of these considerations.

No special engineering or equipment would be required for Alternative 5. This technology is based on standard engineering procedures and methods. Alternatives 4 and 5 rank the same for special engineering.

5.4.6.3 Cost

For truck transportation, the present worth of this alternative for this waste area is $ 154,289,816; the capital costs associated with the implementation of this alternative are $ 101,556,653. For rail transportation, the present worth of this alternative for this waste area is $ 126,701,997; the capital costs associated with the implementation of this alternative are $ 85,529,215.

5.5 SOUTHFIELD

5.5.1 Alternative 0: No Action

5.5.1.1 Effectiveness

In the short term, this alternative poses little risk to workers and the public living immediately off property because all material remains in place and is not disturbed. During the remedial action, property access restrictions are assumed to exist and overall risks are considered low.

Long-term public health and environmental protection are ranked unfavorably because this alternative would not mitigrate the spread of existing contamination.

5.5.1.2 Implementability

This alternative is implementable; the current situation at the FMPC represents implementation of this alternative.

5.5.1.3 Cost

The present worth of this alternative for this waste area is $ 3,197,480. There is no capital costs associated with the implementation of this alternative.

5.5.2 Alternative 1: Nonremoval - Cap

5.5.2.1 Effectiveness

This alternative does not significantly differ in effectiveness when compared to Alternatives 2 and 3, since the presence of sand lenses appears to be limited in this area. Considering the large surface area and the lack of perched water zones (as shown by the cross section in Figure 3-9), removal of perched groundwater over a short time frame would be of limited effectiveness. In addition, the southern and western borders of the Southfield are probably in contact with the sandy

media that characterizes the Great Miami Aquifer, although the wastes are well above the water table. Another consideration is the low concentration of contaminants in perched water.

5.5.2.2 Implementability

Alternative 1 ranks higher than Alternatives 2 and 3 in this category, because effective implementation of Alternatives 2 or 3 would be difficult for this waste unit. Alternative 1 could be implemented for the Southfield.

5.5.2.3 Cost

The present worth of this alternative for this waste area is $ 54,554,319. Capital costs associated with the implementation of this alternative are $ 38,000,302.

5.5.3 Alternative 2: Nonremoval - Slurry Wall, Groundwater Pump and Treatment, and Cap

5.5.3.1 Effectiveness

As stated in Section 5.5.2.1, Alternatives 2 and 3 are of limited effectiveness with regard to the Southfield and are, therefore, ranked as even with Alternative 1.

5.5.3.2 Implementability

Implementation of this alternative would be difficult for the Southfield due to the limited extent of sand lenses and low concentration of contaminants found in perched water zones.

5.5.3.3 Cost

The present worth of this alternative for this waste area is $ 58,368,660. Capital costs associated with the implementation of this alternative are $ 40,656,482.

5.5.4 Alternative 3: Nonremoval - Intercepting Trench, Groundwater Treatment, and Cap

5.5.4.1 Effectiveness

As stated in Section 5.5.2.1, Alternatives 2 and 3 are of limited effectiveness with regard to the Southfield and are, therefore, ranked as even with Alternative 1.

5.5.4.2 Implementability

Implementation of this alternative would be difficult for the Southfield due to the reasons stated in Section 5.5.3.2.

DRAFT

5.5.4.3 Cost

The present worth of this alternative for this waste area is $ 57,727,794. Capital costs associated with the implementation of this alternative are $ 40,210,211.

5.5.5 Alternative 4: Removal - Bulk Packaging, Perched Groundwater Removal, and On-Property Disposal

5.5.5.1 Effectiveness

The level of effectiveness for short-term public health and environmental protection of Alternative 4 is moderately low for the Southfield, since workers and the public living immediately off property could be exposed to fugitive emissions during removal, treatment, and handling. Alternative 4 ranks higher than Alternative 5, because Alternative 5 requires that the waste be transported off site for disposal.

The long-term effectiveness of Alternative 4 for public health and environmental protection is somewhat high, because the material will be isolated from the public and the potential for contaminant movement to groundwater is less. Alternative 5 is ranked even with Alternative 4, because proposed off-site disposal facilities are comparable with those planned for on-property disposal. The volume or toxicity would not be significantly reduced by this alternative.

5.5.5.2 Implementability

The construction of an on-property disposal facility to house the waste is possible with existing technologies and techniques. The necessary items such as manpower, technology, equipment, and materials are available. The process technologies and equipment are considered technically feasible and operationally reliable. Periodic maintenance and inspection would be required. The facility would be subject to degradation (from the weather, deep-rooted vegetation, and burrowing animals and insects) and could require long-term maintenance. As stated earlier, long-term performance may be enhanced by the addition of a biointrusion barrier. No major administrative problems are anticipated and no permits are required. Public acceptance is anticipated to be more favorable for Alternative 4. Major administrative and public acceptance problems are anticipated for Alternative 5, because the wastes would have to be transported through many states. Alternative 4 ranks higher than Alternative 5 as a result of these considerations. No special engineering or equipment is required. This technology is based on standard engineering procedures and methods.

5.5.5.3 Cost

The present worth of this alternative for this waste area is $ 22,919,819. Capital costs associated with the implementation of this alternative are $ 16,125,113.

5.5.6 Alternative 5: Removal - Bulk Packaging, Perched Groundwater Removal, and Off-Site Disposal

5.5.6.1 Effectiveness

The level of effectiveness for short-term public health and environmental protection for Alternative 5 is low for this waste unit, because workers and the public living immediately off property could be exposed to hazardous materials during removal, treatment, and handling. There would be less impact from construction for Alternative 5 than Alternative 4, since only temporary on-property storage would be required for Alternative 5. However, Alternative 4 is ranked higher since off-site disposal would require transport across several states.

The level of effectiveness for Alternative 5, during the long term, for public health and environmental protection is high, because the waste material would be completely removed from the property and placed at an approved or licensed off-site facility. Therefore, the waste would be isolated from the public, and the potential for contaminant migration to groundwater is comparable to that of Alternative 4. Alternative 5 ranks as even with Alternative 4 with regard to long-term effectiveness.

The volume or toxicity of the waste material would not be significantly reduced by either Alternative 5 or 4.

5.5.6.2 Implementability

Construction of a temporary storage structure to house the waste is possible with existing technologies and techniques. Alternative 5 requires less construction than Alternative 4, because the latter alternative requires a permanent on-property structure. Necessary manpower, technology, equipment, and materials are available. Process technologies and equipment for Alternatives 4 and 5 are considered technically feasible and operationally reliable. Periodic maintenance and inspection are required for Alternative 5, but not on a long-term basis as required for Alternative 4. Major administrative problems are anticipated for Alternative 5, as both DOT and local permits are required for off-site transport. Public acceptance problems are also anticipated for Alternative 5. No major administrative problems are anticipated for Alternative 4, since all activities would be on

property and no special permits are anticipated to be required. Therefore, Alternative 4 ranks higher than Alternative 5 as a result of these considerations.

No special engineering or equipment would be required for Alternative 5. This technology is based on standard engineering procedures and methods. Alternatives 4 and 5 rank the same for special engineering.

5.5.6.3 Costs

For truck transportation, the present worth of this alternative for this waste area is $ 824,633,774; the capital costs associated with the implementation of this alternative are $ 560,179,473. For rail transportation, the present worth of this alternative for this waste area is $ 667,123,849; the capital costs associated with the implementation of this alternative are $ 464,247,847.

5.6 ADDITIONAL COSTS

The costs in Sections 5.1 through 5.5 for Alternative 4 do not include costs for on-site storage (tumulus) and shredder/compactor. The present worth of the tumulus for Alternative 4 is $ 479,600,239. The capital costs (for the tumulus) associated with the implementation of this alternative are $ 337,500,000.

The present worth of the shredder/compactor for Alternative 4 is $ 4,645,578. The capital costs (for the shredder/compactor) associated with the implementation of this alternative are $ 2,849,547.

The costs in Sections 5.1 through 5.5 for Alternative 5 do not include costs for the shredder/compactor, temporary holding facility, railroad spur, or the load-out facility.

The present worth of the shredder/compactor for Alternative 5 is $ 4,645,578. The capital costs associated with the implementation of this alternative are $ 2,849,547.

The present worth of the temporary holding facility for Alternative 5 is $ 15,458,341. The capital costs associated with the implementation of this alternative are $ 10,169,970.

The present worth of the railroad spur for Alternative 5 is $ 12,835,245. The capital costs associated with the implementation of this alternative are $ 8,561,813.

DRAFT

The present worth of the load-out facility for Alternative 5 is $ 5,370,074. The capital costs associated with the implementation of this alternative are $ 3,734,978.

For Alternative 5, total truck-transportation costs would include costs for the shredder/compactor and the temporary storage facility. Total rail transportation costs would include costs for the shredder/compactor, rail-road spur, and the loadout facility.

5.7 SCREENING SUMMARY

Two sets of tables are presented in this section. Table 5-1 summarizes the screening results in tabular form. Tables 5-2 through 5-6 summarize a composite ranking for alternatives considered for each solid waste unit within Operable Unit 2. Results of the screening summary relative to alternative retention are discussed in Section 6.0.

DRAFT

TABLE 5-1

SUMMARY OF INITIAL ALTERNATIVE SCREENING FOR OPERABLE UNIT 2

SANITARY LANDFILL

Alternative	Short-Term Effectiveness	Long-Term Effectiveness	Implementability
No Action (Alternative 0)	Effective for protection of human health, and the environment.	Does not provide for mitigating the spread of contamination.	Current situation represents implementability of this alternative.
Cap (Alternative 1)	Favorable for short-term public health compared to Alternatives 2 and 3. As effective as Alternatives 2 and 3 for environmental protection.	As effective as Alternatives 2 and 3.	Easiest action alternative to implement.
Slurry Wall, Groundwater Pump and Treatment, and Cap (Alternative 2)	As effective as Alternative 3 for short-term public health and environmental protection.	As effective as Alternative 3.	Wellpoint system requires more maintenance due to need for consistent operation; therefore, is more difficult to implement.
Interceptor Trench, Groundwater Treatment, and Cap (Alternative 3)	As effective as Alternative 2 for short-term public health and environmental protection.	As effective as Alternative 2.	Requires less maintenance and attention to operation than Alternative 2.
Removal, Bulk Packaging, Perched Groundwater Removal, and On-Property Disposal (Alternative 4)	Moderately low. Potential for exposure to workers and environmental impact due to removal and construction.	Moderately high. Isolation from human contact and reduced potential for contaminant movement to groundwater.	Conventional construction techniques for on-property disposal facility. Permits required for on-property treatment of mixed and hazardous wastes. Long-term maintenance of on-property disposal facility.

TABLE 5-1
(continued)

SANITARY LANDFILL

Alternative	Short-Term Effectiveness	Long-Term Effectiveness	Implementability
Removal, Bulk Packaging, Perched Groundwater Removal, and Off-Site Disposal (Alternative 5)	Low. Potential for exposure to workers and environmental impact due to removal and construction. More public acceptance problems and environmental concerns due to transport.	Moderately high. Complete removal from property and disposal at an approved (licensed) off-site disposal facility.	Temporary storage construction. No long-term, on-property operation and maintenance. DOT and local permits required for transport to an approved (licensed) off-site disposal facility. Permit required for on-property treatment of mixed and hazardous waste. Administratively difficult.

186

556

TABLE 5-1
(Continued)

LIME SLUDGE PONDS

Alternative	Short Term Effectiveness	Long-Term Effectiveness	Implementability
No Action (Alternative 0)	Effective for protection of human health, and the environment.	Not effective in mitigating the spread contamination.	Current situation represents implementability of this alternative.
Cap (Alternative 1)	Favorable for short-term public health compared to Alternatives 2 and 3. Less effective than Alternatives 2 and 3 for environmental protection.	As effective as Alternatives 2 and 3.	Easiest action alternative to implement.
Slurry Wall, Groundwater Pump and Treatment, and Cap (Alternative 2)	As effective as Alternative 3 for short-term public health and environmental protection.	As effective as Alternative 3.	Wellpoint system requires more maintenance due to need for consistent operation; therefore, is more difficult to implement.
Interceptor Trench, Groundwater Treatment, and Cap (Alternative 3)	As effective as Alternative 2 for short-term public health and environmental protection.	As effective as Alternative 2.	Requires less maintenance and attention to operation than Alternative 2.

TABLE 5-1
(Continued)

LIME SLUDGE PONDS

Alternative	Short Term Effectiveness	Long-Term Effectiveness	Implementability
Removal, Bulk Packaging, Perched Groundwater Removal, and On-Property Disposal (Alternative 4)	Low. Potential for exposure to workers and environmental impact due to removal and construction. Additional impact from the process operations for stabilization/solidification and water treatment for Lime Sludge Ponds.	Moderately high. Isolation from human contact and reduced potential for contaminant movement to groundwater. Sludge stabilization/solidification may also reduce contaminant mobility.	Conventional construction techniques for on-property disposal facility, sludge drying/treatment/stabilization/ solidification process, and surface water treatment. Short-term operation and maintenance of sludge stabilization/solidification and surface water treatment. Long-term maintenance for on-property disposal facility.
Removal, Bulk Packaging, Perched Groundwater Removal, and Off-Site Disposal (Alternative 5)	Low. Potential for exposure to workers and environmental impact due to removal and construction. More public acceptance problems and environmental concerns due to transport. Additional impact from the process operations for stabilization/solidification and water treatment for the Lime Sludge Ponds.	Moderately high. Complete removal from property and disposal at an approved (licensed) off-site disposal facility. Stabilization/ solidification of sludge may also reduce contaminant mobility.	Temporary storage construction. Short-term operation and maintenance of sludge stabilization/ solidification system. No long-term, on-property operation and maintenance. DOT and local permits required for off-site transport to an approved (licensed) off-site disposal facility. Administratively difficult.

188

556

TABLE 5-1
(Continued)

INACTIVE FLY ASH DISPOSAL AREA

Alternative	Short-Term Effectiveness	Long-Term Effectiveness	Implementability
No Action (Alternative 0)	May contribute to the concentrations of constituents of concern in surface water and sediment pathways.	Less effective in long term. Not effective in mitigating the spread of contamination.	Current situation represents implementability of this alternative.
Cap (Alternative 1)	Favorable for short-term public health. As effective as Alternatives 2 and 3 for environmental protection.	As effective as Alternatives 2 and 3.	Easiest action alternative to implement.
Slurry Wall, Groundwater Pump and Treatment, and Cap (Alternative 2)	No more effective than Alternative 1 since direct waste contact with aquifer precludes effectiveness and perched water removal.	As effective as Alternative 1 for same reasons given for short term.	Difficult to fully implement this alternative effectively for this solid waste unit.
Interceptor Trench, Groundwater Treatment, and Cap (Alternative 3)	No more effective than Alternative 1 since direct waste contact with aquifer precludes effectiveness and perched water removal.	As effective as Alternative 1 for same reasons given for short term.	Difficult to fully implement this alternative effectively for this solid waste unit.

TABLE 5-1
(Continued)

INACTIVE FLY ASH DISPOSAL AREA

Alternative	Short-Term Effectiveness	Long-Term Effectiveness	Implementability
Removal, Bulk Packaging, Perched Groundwater Removal, and On-Property Disposal (Alternative 4)	Low. Potential for exposure to workers and environmental impact due to removal and construction.	Moderately high. Isolation from human contact and reduced potential for contaminant movement to groundwater.	Conventional construction techniques for on-property disposal facility. No permits required. Long-term maintenance of on-property disposal facility.
Removal, Bulk Packaging, Perched Groundwater Removal, and Off-Site Disposal (Alternative 5)	Low. Potential for exposure to workers and environmental impact due to removal. Impact from construction will be less. More public acceptance problems and environmental concerns due to transport.	Moderately high. Complete removal from property and disposal at an approved (licensed) off-site disposal facility.	Temporary storage construction. No long-term, on-property operation and maintenance. DOT and local permits required for transport to an approved (licensed) off-site disposal facility.

190

556

TABLE 5-1
(Continued)

ACTIVE FLY ASH PILE

Alternative	Short-Term Effectiveness	Long-Term Effectiveness	Implementability
No Action (Alternative 0)	May contribute to the concentrations of constituents of concern in surface water and sediment pathways.	Less effective in long term. Not effective in mitigating the spread of contamination.	Current situation represents implementability of this alternative.
Cap (Alternative 1)	Favorable for short-term public health. As effective as Alternatives 2 and 3 for environmental protection.	As effective as Alternatives 2 and 3.	Easiest action alternative to implement.
Slurry Wall, Groundwater Pump and Treatment, and Cap (Alternative 2)	Limited extent of perched water zones in the vicinity of the Active Fly Ash Pile limits the effectiveness of this alternative.	As effective as Alternative 1 for same reasons given for short term.	Difficult to fully implement this alternative effectively for this solid waste unit.
Interceptor Trench, Groundwater Treatment, and Cap (Alternative 3)	Limited extent of perched water zones in the vicinity of the Active Fly Ash Pile limits the effectiveness of this alternative.	As effective as Alternative 1 for same reasons given for short term.	Difficult to fully implement this alternative effectively for this solid waste unit.
Removal, Bulk Packaging, Perched Groundwater Removal, and On-Property Disposal (Alternative 4)	Low. Potential for exposure to workers and environmental impact due to removal and construction.	Moderately high. Isolation from human contact and reduced potential for contaminant movement to groundwater.	Conventional construction techniques for on-property disposal facility. No permits required. Long-term maintenance of on-property disposal facility.

TABLE 5-1
(Concluded)

ACTIVE FLY ASH PILE

Alternative	Short-Term Effectiveness	Long-Term Effectiveness	Implementability
Removal, Bulk Packaging, Perched Groundwater Removal, and Off-Site Disposal (Alternative 5)	Low. Potential for exposure to workers and environmental impact due to removal. Impact from construction will be less. More public acceptance problems and environmental concerns due to transport.	Moderately high. Complete removal from property and disposal at an approved (licensed) off-site disposal facility.	Temporary storage construction. No long-term, on-property operation and maintenance. DOT and local permits required for transport to an approved (licensed) off-site disposal facility. Administratively difficult.

TABLE 5-1
(Continued)

SOUTHFIELD

Alternative	Short-Term Effectiveness	Long-Term Effectiveness	Implementability
No Action (Alternative 0)	Effective for protection of human health and the environment.	Less effective in long-term. No provision for mitigating the spread of contamination.	Current situation represents implementability of this alternative.
Cap (Alternative 1)	Favorable for short-term public health. As effective as Alternatives 2 and 3 for environmental protectiveness.	As effective as Alternatives 2 and 3.	Easiest action alternative to implement.
Slurry Wall, Groundwater Pump and Treatment, and Cap (Alternative 2)	No more effective than Alternative 1 since limited direct waste contact with aquifer and limited extent of perched water zones in the vicinity of the Southfield precludes effectiveness and perched water removal.	As effective as Alternative 1 for same reasons given for short term.	Difficult to fully implement this alternative effectively for this solid waste unit.
Interceptor Trench, Groundwater Treatment, and Cap (Alternative 3)	No more effective than Alternative 1 since limited direct waste contact with aquifer and limited extent of perched water zones in the vicinity of the Southfield preclude effectiveness and perched water removal.	As effective as Alternative 1 for same reasons given for short term.	Difficult to fully implement this alternative effectively for this solid waste unit.

TABLE 5-1
(Continued)

SOUTHFIELD

Alternative	Short-Term Effectiveness	Long-Term Effectiveness	Implementability
Removal, Bulk Packaging, Perched Groundwater Removal, and On-Property Disposal (Alternative 4)	Moderately low. Potential for exposure to workers and environmental impact due to removal and construction. Additional impacts from the segregation and crushing operations.	Moderately high. Isolation from human contact and reduced potential for contaminant movement to groundwater.	Conventional construction techniques for on-property disposal facility. No permits required. Long-term maintenance of on-property disposal facility.
Removal, Bulk Packaging, Perched Groundwater Removal, and Off-Site Disposal (Alternative 5)	Low. Potential for exposure to workers and environmental impact due to removal. Impact from construction will be less. Additional impacts from the segregation and crushing/compacting operations. More public acceptance problems and environmental concerns due to transport.	Moderately high. Complete removal from property and disposal at an approved (licensed) off-site disposal facility.	Temporary storage construction. Short-term operation and maintenance of segregation, sizing, crushing equipment. No long-term, on-property operation and maintenance. DOT and local permits required for transport to an approved (licensed) off-site disposal facility. Administratively difficult.

TABLE 5-2

FEED MATERIALS PRODUCTION CENTER FEASIBILITY STUDY
SCREENING SUMMARY OPERABLE UNIT 2

SANITARY LANDFILL

	ALT 0	ALT 1	ALT 2	ALT 3	ALT 4	ALT 5
EFFECTIVENESS						
SHORT TERM PUBLIC HEALTH	5	5	4	4	3	2
SHORT TERM ENVIRONMENTAL	5	3	3	3	3	2
LONG TERM PUBLIC HEALTH	1	3	3	3	4	4
LONG TERM ENVIRONMENTAL	1	3	3	3	4	4
REDUCTION IN TOXICITY, MOBILITY AND VOLUME	1	2	2	2	4	4
IMPLEMENTABILITY						
CONSTRUCTIBILITY	5	5	4	4	4	4
RELIABILITY	5	5	3	4	5	5
MAINTAINABILITY	5	4	3	4	4	5
AGENCY APPROVALS	5	5	4	4	5	2
SPECIAL ENGINEERING	5	5	5	5	5	5
TOTAL	**38**	**40**	**34**	**36**	**41**	**37**

DRAFT

195

556

TABLE 5-3

FEED MATERIALS PRODUCTION CENTER FEASIBILITY STUDY SCREENING SUMMARY OPERABLE UNIT 2

	LIME SLUDGE PONDS					
	ALT 0	ALT 1	ALT 2	ALT 3	ALT 4	ALT 5
EFFECTIVENESS						
SHORT TERM PUBLIC HEALTH	5	5	4	4	3	2
SHORT TERM ENVIRONMENTAL	5	3	3	3	3	2
LONG TERM PUBLIC HEALTH	1	3	3	3	4	4
LONG TERM ENVIRONMENTAL	1	3	3	3	4	4
REDUCTION IN TOXICITY, MOBILITY AND VOLUME	1	2	2	2	4	4
IMPLEMENTABILITY						
CONSTRUCTIBILITY	5	5	4	4	4	4
RELIABILITY	5	5	3	4	5	5
MAINTAINABILITY	5	4	3	4	4	5
AGENCY APPROVALS	5	5	4	4	5	2
SPECIAL ENGINEERING	5	5	5	5	5	5
TOTAL	**38**	**40**	**34**	**36**	**41**	**37**

196

556

TABLE 5-4

FEED MATERIALS PRODUCTION CENTER FEASIBILITY STUDY SCREENING SUMMARY OPERABLE UNIT 2

INACTIVE FLY ASH DISPOSAL AREA

	ALT 0	ALT 1	ALT 2	ALT 3	ALT 4	ALT 5
EFFECTIVENESS						
SHORT TERM PUBLIC HEALTH	5	3	3	3	2	2
SHORT TERM ENVIRONMENTAL	5	3	3	3	2	2
LONG TERM PUBLIC HEALTH	1	3	2	2	4	4
LONG TERM ENVIRONMENTAL	1	3	2	2	4	4
REDUCTION IN TOXICITY, MOBILITY AND VOLUME	1	2	2	2	4	4
IMPLEMENTABILITY						
CONSTRUCTIBILITY	5	5	1	1	4	4
RELIABILITY	5	5	1	1	5	5
MAINTAINABILITY	5	4	2	2	4	5
AGENCY APPROVALS	5	5	4	4	5	2
SPECIAL ENGINEERING	5	5	2	2	5	5
TOTAL	**38**	**38**	**22**	**22**	**39**	**37**

TABLE 5-5

FEED MATERIALS PRODUCTION CENTER FEASIBILITY STUDY SCREENING SUMMARY OPERABLE UNIT 2

ACTIVE FLY ASH PILE

	ALT 0	ALT 1	ALT 2	ALT 3	ALT 4	ALT 5
EFFECTIVENESS						
SHORT TERM PUBLIC HEALTH	5	3	3	3	2	2
SHORT TERM ENVIRONMENTAL	5	3	3	3	2	2
LONG TERM PUBLIC HEALTH	1	3	2	2	4	4
LONG TERM ENVIRONMENTAL	1	3	2	2	4	4
REDUCTION IN TOXICITY, MOBILITY AND VOLUME	1	2	2	2	4	4
IMPLEMENTABILITY						
CONSTRUCTIBILITY	5	5	1	1	4	4
RELIABILITY	5	5	1	1	5	5
MAINTAINABILITY	5	4	2	2	4	5
AGENCY APPROVALS	5	5	4	4	5	2
SPECIAL ENGINEERING	5	5	2	2	5	5
TOTAL	**38**	**38**	**22**	**22**	**39**	**37**

TABLE 5-6

FEED MATERIALS PRODUCTION CENTER FEASIBILITY STUDY SCREENING SUMMARY OPERABLE UNIT 2

SOUTHFIELD

	ALT 0	ALT 1	ALT 2	ALT 3	ALT 4	ALT 5
EFFECTIVENESS						
SHORT TERM PUBLIC HEALTH	5	5	5	5	3	2
SHORT TERM ENVIRONMENTAL	5	3	3	3	3	2
LONG TERM PUBLIC HEALTH	1	3	2	2	4	4
LONG TERM ENVIRONMENTAL	1	3	2	2	4	4
REDUCTION IN TOXICITY, MOBILITY AND VOLUME	1	2	2	2	4	4
IMPLEMENTABILITY						
CONSTRUCTIBILITY	5	5	1	1	4	4
RELIABILITY	5	5	1	1	5	5
MAINTAINABILITY	5	4	2	2	4	5
AGENCY APPROVALS	5	5	4	4	5	2
SPECIAL ENGINEERING	5	5	2	2	5	5
TOTAL	**38**	**40**	**24**	**24**	**41**	**37**

199

576

6.0 GENERAL SUMMARY

6.1 SANITARY LANDFILL

6.1.1 Alternative 1

Of the nonremoval alternatives, Alternative 1 received the highest composite ranking due primarily to implementability. It is therefore retained for detailed analysis.

6.1.2 Alternative 2

Alternative 2 received the lowest composite ranking of the nonremoval alternatives because Alternative 3 is considered as effective, easier, and less expensive to implement. Therefore, Alternative 2 is eliminated from further consideration in the alternative evaluation process.

6.1.3 Alternative 3

For the reason stated above, Alternative 3 is preferred to Alternative 2. However, Alternative 1 is as effective and is easier to implement than Alternative 3. Therefore, Alternative 3 is eliminated from further consideration in the alternative evaluation process.

6.1.4 Alternative 4

Of the removal alternatives compared in this task, Alternative 4 received the higher composite score. Overall, Alternative 4 was favorable for short-term effectiveness, due to less transportation risks than those of Alternative 5. Therefore, public acceptance is anticipated to be more favorable for Alternative 4. Alternative 4 also was favorable when considering the possibility of agency approval. In order to maintain the range of alternatives considered for detailed analysis, Alternative 4 was retained for consideration.

6.1.5 Alternative 5

Although Alternative 4 received a higher composite ranking, Alternative 5 is retained for detailed analysis due to uncertainty regarding national policy decisions related to disposal of DOE wastes.

6.2 LIME SLUDGE PONDS

6.2.1 Alternative 1

Of the nonremoval alternatives, Alternative 1 received the highest composite ranking due primarily to implementability. It is therefore retained for detailed analysis.

6.2.2 Alternative 2

Alternative 2 received the lowest composite ranking of the nonremoval alternatives because Alternative 3 is considered as effective, easier, and less expensive to implement. Therefore, Alternative 2 is eliminated from further consideration in the alternative evaluation process.

6.2.3 Alternative 3

For the reason stated above, Alternative 3 is preferred to Alternative 2. However, Alternative 1 is as effective and is easier to implement than Alternative 3. Therefore, Alternative 3 is eliminated from further consideration in the alternative evaluation process.

6.2.4 Alternative 4

As is the case for the Sanitary Landfill, this alternative is the preferred removal for the same reasons outlined in Section 6.1.4 and is, therefore, retained for further consideration.

6.2.5 Alternative 5

For the reasons given in Section 6.1.5, Alternative 5 is retained for further consideration.

6.3 INACTIVE FLY ASH DISPOSAL AREA

6.3.1 Alternative 1

Of the nonremoval alternatives, Alternative 1 received the highest composite ranking due primarily to implementability. It is therefore retained for detailed analysis.

DRAFT

6.3.2 Alternative 2

Alternatives 2 and 3 received the lowest composite ranking of the nonremoval alternatives. This is primarily due to low effectiveness and an inability to effectively implement this alternative because of waste contact with the Great Miami Aquifer above the water table. Alternative 2 is, therefore, eliminated from further consideration.

6.3.3 Alternative 3

Alternative 3 is also eliminated from consideration for the same reasons as Alternative 2.

6.3.4 Alternative 4

As is the case for the Sanitary Landfill, this alternative is the preferred removal alternative for the same reasons outlined in Section 6.1.4 and is, therefore, retained for further consideration.

6.3.5 Alternative 5

For the reasons given in Section 6.1.5, Alternative 5 is retained for further consideration.

6.4 ACTIVE FLY ASH PILE

6.4.1 Alternative 1

Of the nonremoval alternatives, Alternative 1 received the highest composite ranking due primarily to implementability. It is therefore retained for detailed analysis.

6.4.2 Alternative 2

Alternatives 2 and 3 received the lowest composite ranking of the nonremoval alternatives. This is primarily due to low effectiveness and an inability to effectively implement this alternative for the Active Fly Ash Pile. Therefore, Alternative 2 is eliminated from further consideration.

6.4.3 Alternative 3

For the same reasons given above, Alternative 3 is also dropped from further consideration.

6.4.4 Alternative 4

As is the case for the Sanitary Landfill, this alternative is the preferred removal alternative for the same reasons outlined in Section 6.1.4 and is, therefore, retained for further consideration.

6.4.5 Alternative 5

For the reasons given in Section 6.1.5, Alternative 5 is retained for further consideration.

6.5 SOUTHFIELD

6.5.1 Alternative 1

Of the nonremoval alternatives, Alternative 1 received the highest composite ranking due primarily to implementability. It is therefore retained for detailed analysis.

6.5.2 Alternative 2

Alternatives 2 and 3 received the lowest composite ranking of the nonremoval alternatives. This is primarily due to low effectiveness and an inability to effectively implement this alternative for the Southfield. Alternative 2 is, therefore, eliminated from further consideration.

6.5.3 Alternative 3

Alternative 3 is also eliminated from consideration for the same reasons as Alternative 2.

6.5.4 Alternative 4

As is the case for the Sanitary Landfill, this alternative is the preferred removal alternative for the same reasons outlined in Section 6.1.4 and is, therefore, retained for further consideration.

6.5.5 Alternative 5

For the reasons given in Section 6.1.5, Alternative 5 is retained for further consideration.

DRAFT

6.6 PRESENTATION OF ALTERNATIVES RECOMMENDED FOR DETAILED ANALYSIS

Table 6-1 shows the alternatives that are recommended for detailed analyses as a result of initial screening.

TABLE 6-1

ALTERNATIVES RECOMMENDED FOR DETAILED ANALYSIS

Waste Unit	Alt. 0	Alt. 1	Alt. 2	Alt. 3	Alt. 4	Alt. 5
Sanitary Landfill	X	X			X	X
Lime Sludge Ponds	X	X			X	X
Inactive Fly Ash Disposal Area	X	X			X	X
Active Fly Ash Pile	X	X			X	X
Southfield Area	X	X			X	X

6.7 DETAILED ANALYSIS PREVIEW

The detailed analysis will focus on the incremental risk reduction each alternative provides, relative to the baseline condition. Alternative 1 will focus on the need for caps, and the type of cap for each solid waste unit. Alternative 4 will focus on whether the incremental reduction in risk is justified by the additional incurred costs of implementing this alternative. Alternative 5 will consider the feasibility of off-site locations and the relative risks involved in implementation.

REFERENCES

DRAFT

REFERENCES

Argonne National Laboratory, 1989, "A Manual for Implementing Residual Radioactive Material Guidelines," ANL/ES-160, prepared for U.S. Dept. of Energy, Argonne, IL.

ASI, 1990, "Supporting Calculations for Initial Screening of Alternatives for Operable Unit 2," Rev. 0, 6021202.0, prepared for U.S. Dept. of Energy Feed Materials Production Center, Fernald, OH.

ASI/IT, Dec. 1988, "Development of Alternatives (Task 12) for the Feasibility Study," Rev. 1, prepared for U.S. Dept. of Energy, Oak Ridge Operations Office, Oak Ridge, TN.

ASI/IT, 1989a, "Borehole Logs for the Remedial Investigation at the Feed Materials Production Center," n.p.

ASI/IT, Oct. 1989b, "Remedial Investigation Work Plan Addendum, Production and Additional Suspect Areas Work Plan," prepared for U.S. Dept. of Energy, Oak Ridge Operations Office, Oak Ridge, TN.

ASI/IT, July 1990b, "Remedial Investigation Report for Operable Unit 2, Vol. I, " prepared for U.S. Dept. of Energy, Oak Ridge Operations Office, Oak Ridge, TN.

ASI/IT, Aug. 1990a, "Engineering Evaluation/Cost Analysis, South Plume," Draft, prepared for U.S. Dept. of Energy, Oak Ridge Operations Office, Oak Ridge, TN.

Canter, L. W. and R. C. Knox, 1985, Groundwater Pollution Control, Lewis Publishers, Inc., Chelsea, MI.

Electric Power Research Institute, Jan. 1979, "Chemical/Physical Stability of Flue Gas Cleaning Wastes," Vol. 2, EPRI RP-671, Radian Corporation, Austin, TX.

Godbee, H.W., S.A. Hobert and A.A. Moghissi, eds., 1986, Radioactive Waste Technology, American Soc. of Mechanical Engineers, New York, NY.

International Technology Corp., 1988, "Hydrologic Study of FMPC Discharge to the Great Miami River (Zone of Influence Report)," prepared for Westinghouse Materials Co. of Ohio, U.S. Dept. of Energy, Oak Ridge Operations Office, Oak Ridge, TN.

McDaniel, E.W., T.M. Gilliam, L.R. Dole and G.A. West, 1987, "Weldon Spring, Missouri, Raffinate Pits 1, 2, 3, and 4: Preliminary Grout Development Screening Studies for In-Situ Waste Immobilization," ORNL/TM-9264, Martin Marietta Energy Systems, prepared for the U.S. Dept. of Energy, Oak Ridge National Laboratory, Oak Ridge, TN.

Miller, K.L. and W.A. Weidner, eds., 1986, CRC Handbook of Management of Radiation Protection Programs, CRC Press, Boca Raton, FL.

Sitton, Mary D., "Site Analysis, Feed Materials Production Center, Fernald, Ohio," Interim Report, The Bionetics Corporation, Warrenton, VA, prepared for Environmental Monitoring Systems Laboratory, Office of Research and Development, U.S. Environmental Protection Agency, Las Vegas, NV.

REFERENCES - (Continued)

U.S. Dept. of Energy, June 1989, "FMPC Sampling and Analysis Report," Draft, Vol. 1 and Vol. 2, DOE, Oak Ridge Operations Office, Oak Ridge, TN.

U.S. Environmental Protection Agency, Oct. 1985, "Handbook, Remedial Action at Waste Disposal Sites (Revised)," EPA/625/6-85/006, EPA, Cincinnati, OH, and EPA, Washington, DC.

U.S. Environmental Protection Agency, September 1988d, "Technology Screening Guide for Treatment of CERCLA Soils and Sludges," EPA/540/2-88/004, EPA, Washington, DC.

U.S. Environmental Protection Agency, Oct. 1988a, "Guidance for Conducting Remedial Investigations and Feasibility Studies under CERCLA," EPA, Office of Emergency and Remedial Responses, Washington, DC.

U.S. Environmental Protection Agency, 1988c, "Drinking Water Criteria Document for Inorganic Mercury," EPA, Office of Drinking Water, Washington DC.

U.S. Environmental Protection Agency, 1989a, "Health Effects Assessment Summary Tables," Third Quarter, FY 1989.

U.S. Environmental Protection Agency, 1989b, "Risk Assessment Guidance for Superfund Human Health Evaluation Manual Part 4, Interim Final," EPA, Office of Emergency and Remedial Response, Washington, D.C.

Westinghouse Materials Company of Ohio, 1989, "Feed Materials Production Center Environmental Monitoring Annual Report for 1988," FMPC-2173, WMCO, Cincinnati, OH, prepared for U.S. Dept. of Energy, Oak Ridge Operations Office, Oak Ridge, TN.

Weston, Inc., Roy F., Sept. 1987b, "Characterization Investigation Study: Geophysical Survey," Vol. 1, U.S. Dept. of Energy Feed Materials Production Center, Fernald, OH, prepared for Westinghouse Materials Co. of Ohio, Cincinnati, OH.

Weston, Inc., Roy F., Nov. 1987a, "Characterization Investigation Study: Chemical and Radiological Analyses of the Waste Storage Areas," Vol. 2, U.S. Dept. of Energy Feed Materials Production Center, Fernald, OH, prepared for Westinghouse Materials Co. of Ohio, Cincinnati, OH.

Weston, Inc., Roy F., Mar. 1988, "Geotechnical Evaluation of Material Properties of Waste Pit Materials at the Feed Materials Production Center, Fernald, OH," U.S. Dept. of Energy Feed Materials Production Center, Fernald, OH, prepared for Westinghouse Materials Co. of Ohio, Cincinnati, OH.

APPENDIX

DRAFT

APPENDIX A

APPLICABLE OR RELEVANT AND APPROPRIATE REQUIREMENTS

APPLICABLE OR RELEVANT AND APPROPRIATE REQUIREMENTS (ARARs)

A.1 INTRODUCTION

The U.S. Department of Energy (DOE) must generally comply with all provisions of federal environmental statutes and regulations, as well as all applicable state and local requirements. In performing the Remedial Investigation/Feasibility Study (RI/FS) and subsequent remedial actions for Operable Unit 2 within the Comprehensive Environmental Response, Compensation, and Liability Act/Superfund Amendments and Reauthorization Act of 1986/National Contingency Plan (CERCLA/SARA/NCP) framework, the Feed Materials Production Center (FMPC) is required to comply with all applicable or relevant and appropriate requirements. The purpose of this appendix is to list potential applicable or relevant and appropriate requirements (ARARs) and/or their sources.

Applicable requirements are those federal and state regulatory requirements that directly and fully address or regulate the hazardous substance, pollutant, contaminant, action being taken, or other circumstance at a CERCLA site. Examples of federal statutes specifically cited in CERCLA from which requirements may apply include the Toxic Substances Control Act (TSCA), the Safe Drinking Water Act (SDWA), the Clean Air Act (CAA), the Clean Water Act (CWA), and the Marine Protection Research and Sanctuaries Act (MPRSA). Relevant and appropriate requirements are those federal and state human health and environmental regulatory requirements that address problems or situations sufficiently similar to those encountered at CERCLA sites and are appropriate to the circumstances of release or threatened release, so that their uses are well suited to the particular site. In such cases, application of these requirements would be relevant and appropriate although not mandated by law. Relevant and appropriate requirements are intended to carry the same weight as applicable requirements.

A.2 POTENTIAL ARARs FOR OPERABLE UNIT 2

In accordance with current U.S. Environmental Protection Agency (EPA) guidance, ARARs are to be progressively developed and applied on a site-specific basis as the RI/FS proceeds. The initial step in the process entails the listing of all potential ARARs for the remedial action process at the subject site. A comprehensive listing of potential ARARs for all of the operable units for the FMPC was completed as part of the Feasibility Study Work Plan. The potential ARARs for the FMPC were categorized into the following EPA-recommended classifications:

- Chemical-Specific ARARs - Usually health- or risk-based numerical values or methodologies which, when applied to site-specific conditions, result in the establishment of numerical values for each chemical of concern. These values

establish the acceptable amount or concentration of a chemical that may be found in or discharged to the environment.

- Location-Specific ARARs - Restrictions placed on the concentration of a chemical or the conduct of activities solely because they occur in special locations.

- Action-Specific ARARs - Usually technology- or activity-based requirements or limitations on actions taken with respect to waste management and site cleanup.

A brief discussion of each of the primary federal and state of Ohio ARARs, along with pertinent agency-issued criteria, advisories, and guidance is given below. A summary listing of potential ARARs is found in Table A-1.

Federal ARARs

Federal ARARs and other criteria, advisories, or guidelines from specific laws include the following:

- Safe Drinking Water Act (42USC300f, et seq. and 40CFR141 to 149) - Establishes Maximum Contaminant Levels (MCLs) which are enforceable standards for chemicals in public drinking water supplies. They not only consider health factors but also the economic and technical feasibility of removing a contaminant from a water supply system. The EPA has recently proposed MCL goals (MCLGs) for several organic and inorganic compounds in drinking water. MCLGs are nonenforceable guidelines that do not consider the technical feasibility of contaminant removal. The SDWA also authorizes the following programs:

  - The Underground Injection Control (UIC) Program
  - The Sole-Source Aquifer Program
  - The Wellhead Protection Program

- Toxic Substances Control Act (15USC2601, et seq. and 40CFR702 to 799) - Regulates the use and disposal of polychlorinated biphenyls (PCBs) and asbestos.

- Resource Conservation and Recovery Act (42USC6901, et seq. as amended and 40CFR260 to 279) - Establishes the criteria and standards for identification, management, and disposal of hazardous waste.

- Federal Water Pollution Control Act, As amended by the Clean Water Act (33USC-1251, et seq. and 40CFR104 to 140) - Governs point-source discharges through the National Pollutant Discharge Elimination System (NPDES), dredge and fill activities which may degrade or disturb wetlands or other aquatic habitats, and oil or hazardous substance spills to waters of the United States.

- Ambient Water Quality Criteria - Criteria for 64 chemicals were established in 1980, pursuant to Section 304(a)(1) of the CWA. AWQC are available for the protection of human health from exposure to chemicals in drinking water, from ingestion of aquatic biota, and for the protection of fresh-water and salt-water aquatic life.

- Regulation of Activities Affecting Waters of the U.S. (33CFR320 to 329) - U.S. Army Corps of Engineers (COE) regulations that are applicable to wetlands and navigable waters.

- Endangered Species Act of 1978 (16USC1531, et seq.) - Provides for consideration of the impacts of remedial actions on endangered and threatened species.

- Fish and Wildlife Coordination Act (16USC661, et seq. and 40CFR6.302) - Provides for consideration of the impacts on wetlands and protected habitats.

- Fish and Wildlife Improvement Act of 1978 (16USC742a) - Provides for consideration of the impacts on wetlands and protected habitats.

- Clean Air Act (42USC4701, et seq. and 40CFR61, Subparts H and Q)) - Through the National Ambient Air Quality Standards (NAAQS) it identifies primary and secondary standards for six "criteria" pollutants, and through the National Emission Standards for Radionuclides Emissions from DOE facilities, it provides annual exposure limits from air emissions from DOE facilities.

- EPA Regulations for Health and Environmental Protection Standards for Uranium and Thorium Mill Tailings (40CFR192) - Applies to the control of residual radioactive material at designated processing or repository sites under Section 108 of the Uranium Mill Tailings Radiation Control Act of 1978 and to restoration of such sites following any use of subsurface minerals under Section 104(h) of the above-referenced act.

- NRC Regulations for Standards for Protection against Radiation (10CFR20) - Establishes standards for protection against radiation hazards arising out of activities under licenses issued by the U.S. Nuclear Regulatory Commission (NRC) and issued pursuant to the Atomic Energy Act of 1954, as amended, and the Energy Reorganization Act of 1974.

- NRC Criteria Relating to the Operation of Uranium Mills and the Disposition of Tailings or Wastes Produced by the Extraction or Concentration of Source Material From Ores Processed Primarily for Their Source Material Content (10CFR40, Appendix A) - Establishes technical and long-term site surveillance criteria relating to siting, operation, decontamination, decommissioning, and reclamation of mills and tailings or waste systems and sites at which such mills and systems are located.

- The Atomic Energy Act of 1954 (42USC2011, as amended) - Authorizes the conduct of atomic energy activities.

- Licensing Requirements for Land Disposal of Radioactive Waste (10CFR61) - Establishes procedures and criteria for the land disposal of radioactive wastes.

State of Ohio ARARs

State of Ohio ARARs and other criteria, advisories, or guidance include the authority of the Ohio Environmental Protection Agency (OEPA) to manage federal environmental programs. OEPA

shares several responsibilities with other Ohio agencies including the Department of Health, the Department of Natural Resources (ODNR), and the Public Utilities Commission:

- Ohio Water Pollution Control Act (ORC Chapter 6111) -OEPA has the authority to administer all of the federally mandated water discharge programs, including the NPDES programs for all source categories (OAC3745-33-01 through 3745-33-05), and an effective pretreatment program (OAC3745-3). ORC 6111 also prohibits pollution of waters of the state.

- Solid and Hazardous Waste Disposal Law (OAC Chapter 3734) - OEPA has been developing extensive solid and hazardous waste regulations (OAC3745 Chapters 27-70). These programs are administered by the Solid and Hazardous Waste Division of OEPA.

- Water Quality Standards (OAC3745-1) - Ohio has developed water quality standards applicable to state surface water (OAC3745-1-04), an antidegradation policy (OAC3745-1-05) and has designated water use criteria for all major surface water bodies (OAC3745-1-07 to 32).

- Drinking Water Rules - The rules for public drinking water are set forth by OAC3745-81-01 to 55, and includes MCLs. OAC3745-82 sets secondary contaminant standards.

- Water Well Installation - For new wells intended for human consumption, well installation is regulated under OAC3745-9 by OEPA and ODNR.

- The Underground Injection Well Control Program - Approvals for injection wells are required from the ODNR and OEPA. The requirements for permits to inject fluids via wells are set forth in OAC3745-34.

- Water System - Authority to establish and enforce rules regarding private water systems is granted to the Department of Health under OAC3701. The Department of Health governs plan approvals, procedures, construction, and abandonment for private water systems (OAC3701-38). Community and public water supply systems are governed and approved by the OEPA under OAC3745-83 to 95.

- Radiation Standards - Standards for protection and handling of equipment and materials associated with ionizing radiation are governed by rules set by the Department of Health under OAC3701-38.

- Air Pollution Control (ORC3704, OAC3745-15, OAC3745-17) - Establishes the authority of Ohio EPA to regulate and control air pollution within the state under ORC 3704.03. Requires person responsible for any air contaminant source to install, employ, maintain, and operate such emissions, ambient air quality, meteorological, or other monitoring devices or methods as director prescribes. Requires the sampling of emissions at such locations, intervals and in a manner which the director prescribes. Requires the maintenance of records and filing of periodic reports with the director on the location, size, and height of emissions outlets, as well as the rate, duration, and composition of emissions.

A.3 GUIDANCE TO BE CONSIDERED (TBC)

Because ARARs may not exist or may not be sufficient to protect human health and the environment at a CERCLA site, it is necessary to evaluate nonlegally binding or promulgated criteria, advisories, guidance, or policies for protective cleanup levels when determining cleanup requirements or designing a remedy. EPA and support agencies may, as appropriate, identify other advisories, criteria, or guidance to be considered for a particular remediation activity. This TBC category consists of advisories, criteria, or guidance that were developed by EPA, other federal agencies, or states that are not ARARs.

The application of the ARARs to Operable Unit 2 at the FMPC is complicated by the fact that the DOE and radionuclides (particularly uranium) have been exempted from some environmental regulations. From a radiological standpoint, the DOE has been primarily self-regulating for environmental activities, and has established its own policies for environmental monitoring, waste disposal, and limits of exposure to employees and the public. EPA regulations regarding the handling and disposal of wastes containing radionuclides are under programs set up by the Uranium Mill Tailings Act and the NRC. It should also be noted that DOE orders are not promulgated requirements but fall under the category of TBCs.

A brief discussion of each of the primary Federal TBCs presently being considered is given below.

FEDERAL TBCs

- Health Effects Assessments - Presents toxicity data for specific chemicals for use in public health assessments. Also considered applicable are Cancer Potency Factors (CPFs) and referenced doses provided in the Human Health Evaluation Manual (EPA 1989).

- Groundwater Protection Strategy - Documents EPA policy to protect groundwater for its highest present or potential beneficial use. The strategy designates three categories of groundwater:

  - Class 1 - Special Groundwaters: Waters that are highly vulnerable to contamination and are either irreplaceable or ecologically vital sources of drinking water.

  - Class 2 - Current and Potential Sources of Drinking Water and Waters Having other Beneficial Uses: Waters that are currently used or that are potentially available for use.

  - Class 3 - Groundwater not a Potential Source of Drinking Water and of Limited Beneficial Use: Class 3 groundwater units are further subdivided into the following two subclasses:

a. Subclass 3A includes groundwater units that are highly to intermediately interconnected to adjacent groundwater units of a higher class and/or surface waters. They may, as a result, be contributing to the degradation of the adjacent waters. They may be managed at a similar level as Class 2 groundwaters, depending upon the potential for producing adverse effects on the quality of adjacent waters.

b. Subclass 3B is restricted to groundwater units characterized by a low degree of interconnection to adjacent surface waters or other groundwater units of a higher class within the Classification Review Area. These groundwaters are naturally isolated from sources of drinking water in such a way that there is little potential for producing adverse effects on quality. They have low resource value outside of mining or waste disposal.

- DOE Order for CERCLA Program (5400.4) (Draft) - Provides direction for DOE to implement a CERCLA program.

- DOE Order for Radiation Protection of the Public and the Environment (5400.5) (February 8, 1990) - Establishes standards and requirements with respect to protection of the public and the environment against radiation.

- DOE Order for Hazardous and Radioactive Mixed Waste Management (5480.2) (December 13, 1982) - Establishes hazardous waste management procedures for facilities operated under authority of the Atomic Energy Act of 1954, as amended.

- DOE Order for Environmental Protection, Safety, and Health Protection Information Reporting Requirements (5484.1) (February 24, 1981) - Establishes the requirements and procedures for reporting and investigating matters of environmental protection, safety, and health protection significant to DOE operations.

- DOE Order for Quality Assurance (5700.6B) (September 23, 1986) - Establishes DOE's quality assurance program.

- DOE Order for Radioactive Waste Management (5820.2A) (September 26, 1988) - Establishes policies and guidelines for the management of radioactive waste and contaminated facilities.

- DOE Plan for Implementing EPA Standards for UMTRA Sites (UMTRA-DOE/AL-163) (January 1984) - Presents guidance for implementing EPA standards on uranium mill tailing remedial action sites.

- DOE Technical Approach Document - Revision II (UMTRA-DOE/AL-050425.0002) (December 1989) - Presents the technical approach for remediation of uranium mill tailings remedial action sites.

- DOE Remedial Action Planning and Disposal Cell Design (UMTRA-DOE/AL 400503) (January 1989) - Presents guidance for complying with the proposed 40CFR192 for planning and disposal cell design for uranium mill tailings remedial action sites.

- DOE Project Surveillance and Maintenance Plan (UMTRA-DOE/AL 350124) - Presents guidance for surveillance and maintenance of uranium mill tailings remedial action sites.
- Executive Order 11988 - Presents requirements for federal agencies to protect floodplains.
- Executive Order 11990 - Presents requirements for federal agencies to protect wetlands.
- NRC Regulatory Guide for Termination of Operating Licenses for Nuclear Reactors (NRC Regulatory Guide 1.86) (June 1974) - Establishes acceptable surface radioactivity contamination levels for releases of equipment and facilities for unrestricted use.

A summary listing of TBCs is found in Table A-1.

A.4 SUMMARY

The establishment of final federal and state ARARs and TBCs for uranium and other constituents found in the operable unit for the evaluation of remedial action alternatives for Operable Unit 2 at the FMPC will be a progressive, multi-step process involving interactive discussions among DOE, EPA, and OEPA. The critical application of the final ARARs will be performed during the detailed analysis of alternatives. The ARARs, in conjunction with the baseline risk assessment, will assist in the determination of the cleanup levels required to adequately protect public health and the environment at the FMPC.

DRAFT

TABLE A-1.
SUMMARY LIST OF POTENTIAL APPLICABLE OR RELEVANT AND APPROPRIATE REQUIREMENTS AND GUIDANCE TO BE CONSIDERED

DRAFT

Chemical-Specific ARARs	
Requirement	Description
Resource Conservation and Recovery Act (RCRA), (40CFR260-272)	Sets standards applicable to hazardous waste treatment, storage, and disposal
RCRA/Solid Waste (40CFR240-257)	Sets standards applicable to solid waste treatment, storage, and disposal
Safe Drinking Water Act (40CFR141-149) a. Maximum contaminant levels (MCLs) b. Maximum contaminant level goals (MCLGs)	Remedial actions may provide cleanup to the MCLs considered pursuant to SARA Section 121(d)(2)(A)(ii)
NRC Regulations for Standards for Protection Against Radiation (10CFR20)	Establishes doses, levels, and concentrations for restricted and unrestricted areas (10CFR20.101-105)
EPA Regulations for Health and Environmental Protection Standards for Uranium and Thorium Mill Tailings (40CFR192)	Establishes cleanup limits for uranium and thorium mill tailings in soil and groundwater
Clean Air Act (42USC7401, et seq.) a. National Ambient Air Quality Standards (NAAQS) for six criteria pollutants (40CFR50)	Identifies primary and secondary standards for six "criteria pollutants" (i.e., lead, particulates)
b. National Emission Standards for Radionuclides Emissions from DOE Facilities (40CFR61 Subpart H)	Provides annual limits of 10 mrem/yr (whole body) for air emissions (except radon) from DOE facilities
NRC Licensing Requirements for Land Disposal of radioactive Waste (10CFR61)	Provides for protection of the general population from releases of radioactivity (<25 mrem/yr)
Ohio Regulations a. Air Pollution OAC3745-15-07 OAC3745-17-07	Escape, releases, emissions to open air Prevention of air pollution nuisance Nondegradation policy

TABLE A-1.
(Continued)

Chemical-Specific ARARs	
Requirement	Description
OAC3745-17-05	Particulate emissions to air
OAC3745-17-07	Emissions of organics to air
OAC3745-17-08	Fugitive dust emissions
OAC3745-21-07	Air quality
b. Water Pollution	
OAC3745-81	Drinking water rules, sets MCLs for gross alpha, beta and radium-226 and radium-228
OAC3745-31	Set requirements for wastewater treatment facilities
OAC3745-1	Water Quality standards, 3745-01-4(D) sets the criterion applicable to all waters, 3745-01-05 sets forth the antidegradation policy for state waters, 3745-01-07 presents specific surface water quality criteria for both acute and chronic effects on aquatic organisms, 3745-01-21 describes use designations for the Great Miami River, 3745-1-32(c)(9) sets standards for radioactive materials in receiving waters of the Ohio River
c. Radiation Protection	Ohio Radiation Protection Standards provide concentration limits for discharge of radioactive materials into air or water in unrestricted areas

DRAFT

TABLE A-1.
(Continued)

Location-Specific ARARs	
Requirement	Description
Rivers and Harbors Act of 1899 (33CFR320 to 327)	Remedial alternatives may effect the Great Miami River
Ohio Location Standards (OAC3745-54-18)	Governs the location of hazardous waste treatment, storage, or disposal with respect to floodplains
Regulations of activities affecting waters of the U.S. (33CFR320 to 329)	COE regulations apply to both wetlands and navigable (33CFR320-329), and for Ohio (OAC3745-32) waters
Fish and Wildlife Coordination Act (40CFR6.302)	Provides for coordination of the impacts on wetlands and protected habitats

DRAFT

TABLE A-1.
(Continued)

Action-Specific ARARs	
Requirements	Description
Resource Conservation and Recovery Act (RCRA) (40CFR260-272)	Sets standards applicable to hazardous waste treatment, storage, and disposal
RCRA/Solid Waste (40CFR240-257)	Sets standards applicable to solid waste treatment, storage, and disposal
Clean Water Act Ambient Water Quality Criteria (40CFR104-140)	Alternatives include discharge to surface waters
NRC Licensing Requirements for Land Disposal of Radioactive Waste (10CFR61)	Provides criteria for siting, decontamination, decommissioning, and disposition of uranium tailings and wastes (Appendix A)
NRC Regulations for Licensing of Source Material (10CFR40)	Provides requirements for siting, design, operation, closure, and control after closure for radioactive waste disposal facilities
EPA Regulations for Health and Environmental Protection Standards for Uranium and Thorium Mill Tailings (40CFR192)	Provides standards for control of residual radioactive materials from inactive uranium processing sites
Ohio General Radiation Protection Standards (OAC3701 to 70)	Applies to all facilities that receive, possess, use, store, transfer, etc., any source of radiation
Ohio Radiation Protection Standards (OAC3701-38)	Applies to all facilities that receive, possess, use, store, transfer, etc., any source of radiation
Air Pollution Nuisances Prohibited (OAC3745-15-07)	Prohibits air emissions that could be constituted as a public nuisance

DRAFT

TABLE A-1.
(Continued)

TBCs	
Requirements	Description
Executive Order 11988 Floodplain Management	Provides considerations for management of floodplain areas
Executive Order 11990 Protection Of the Wetlands	Provides considerations for protection of wetlands
Radioactive Waste Management (DOE Order 5820.2A)	Sets requirements for management of radioactive wastes at DOE facilities
Radiation Protection of the Public and the Environment (DOE Order 5400.5)	Sets requirements for protection of the public and the environment from radioactive materials at DOE facilities
CERCLA Program (DOE Order 5400.4) (Draft)	Provides direction for DOE to implement a CERCLA program
Hazardous and Radioactive Mixed Waste Management (DOE Order 5480.2) (December 13, 1982)	Establishes hazardous waste management procedures for facilities operated under authority of the Atomic Energy Act of 1954, as amended
Plan for Implementing EPA Standards for UMTRA Sites (UMTRA-DOE/AL-163)	Presents guidance for implementing EPA standards on uranium mill tailings remedial action sites
Technical Approach Document (UNTRA-DOE/AL 050425)	Presents the technical approach used by DOE for remediation of uranium mill tailings remedial action sites
Remedial Action Planning and Disposal Cell Design (UMTRA-DOE/AL 400503)	Presents guidance for complying with 40CFR192 for planning and disposal cell design for uranium mill tailings remedial action sites
Project Surveillance and Maintenance Plan (UMTRA-DOE/AL 350124)	Presents guidance for surveillance and maintenance of uranium mill tailings remedial action sites.
Minimum Technology Guidance for Final Covers on Hazardous Waste Landfills and Surface Impoundments (EPA)	Presents guidance for final covers of hazardous waste landfills and surface impoundments.

DRAFT

APPENDIX

DRAFT

APPENDIX B

REMEDIAL ACTION OBJECTIVES FOR OPERABLE UNIT 2

TABLE B-1

GROUNDWATER REMEDIAL ACTION OBJECTIVE FOR ORGANIC CHEMICALS
OPERABLE UNIT 2: SANITARY LANDFILL

Chemical	Basis for Remedial Objective	Acceptable Water Concentration (mg/L)	FMPC Action Level for a Single Operable Unit[a] (mg/L)
Acenapthene	–	–	–
Acetone	0.1 (mg/kg/d) RfD	3.5	0.9
Anthracene	0.3 (mg/kg/d)RfD	10.5	2.6
Aroclor-1242	0.0005 (mg/L) MCL	0.0005	0.00013
Aroclor-1248	0.0005 (mg/L) MCL	0.0005	0.00013
Aroclor-1254	0.0005 (mg/L) MCL	0.0005	0.00013
Benzo(a)anthracene	0.0001 (mg/L) PMCL	0.0001	0.000025
Benzo(a)pyrene	0.0002 (mg/L) PMCL	0.0002	0.00005
Benzo(b)fluoranthene	0.0002 (mg/L) PMCL	0.0002	0.00005
Benzo(ghi)perylene	–	–	–
Benzo(k)fluoranthene	0.0002 (mg/L) PMCL	0.0002	0.00005
Bis(2-ethylhexyl) phthalate	0.004 (mg/L) PMCL	0.004	0.001
2-Butanone	–	–	–
Butyl benzylphthalate	0.2 (mg/kg/d) RfD	7.0	1.75

TABLE B-1
(continued)

Chemical	Basis for Remedial Objective	Acceptable Water Concentration (mg/L)	FMPC Action Level for a Single Operable Unit[a] (mg/L)
Chrysene	–	–	–
Dibenzofuran	–	–	–
1,1-Dichloroethane	0.091 $(mg/kg/d)^{-1}$ CPF	3.8×10^{-4}	9.5×10^{-5}
2,4-Dimethylphenol	–	–	–
Di-n-butylphthalate	–	–	–
Di-n-octylphthalate	–	–	–
Ethylbenzene	0.7 (mg/L) PMCL	0.7	0.175
Fluoranthene	0.04 (mg/kg/d) RfD	1.4	0.35
Fluorene	0.04 (mg/kg/d) RfD	1.4	0.35
Indeno(1,2,3-cd)pyrene	–	–	–
Methylene chloride	0.005 (mg/L) PMCL	0.005	0.00125
2-methylnaphthalene	–	–	–
2-methylphenol	–	–	–
4-methylphenol	–	–	–
Naphthalene	0.004 (mg/kg/d) RfD	0.14	0.035
N-nitrosodiphenylamine	4.9×10^{-3} $(mg/kg/d)^{-1}$ CPF	7.1×10^{-3}	1.8×10^{-3}
Phenanthrene	–	–	–

TABLE B-1
(continued)

Chemical	Basis for Remedial Objective	Acceptable Water Concentration (mg/L)	FMPC Action Level for a Single Operable Unit[a] (mg/L)
Phenol	0.6 (mg/kg/d) RfD	21.0	5.3
Pyrene	–	–	–
Tetrachoroethene	0.005 (mg/L) PMCL	0.005	0.00125
Toluene	2.0 (mg/L) PMCL	2.0	0.5
Xylenes (Total)	10.0 (mg/L) PMCL	10.0	2.5

[a] Twenty-five percent of ARAR of risk-based standard

TABLE B-2

GROUNDWATER REMEDIAL ACTION OBJECTIVES FOR INORGANIC CHEMICALS
OPERABLE UNIT 2: SANITARY LANDFILL

Chemical	Basis for Remedial Objective	Acceptable Water Concentration (mg/L)	FMPC Action Level for a Single Operable Unit[a] (mg/L)
Cadmium	0.005 mg/L PMCL	0.005	1.0×10^{-3}
Mercury	0.002 (mg/L) MCL	0.002	5.0×10^{-4}
Nickel	0.1 (mg/L) PMCL	0.01	2.5×10^{-3}
Zinc	0.2 mg/kg/d RfD	7.0	2
Uranium	0.003 mg/kg/d RfD	0.1	0.03

[a] Twenty-five percent of ARAR of risk-based standard

TABLE B-3

GROUNDWATER REMEDIAL ACTION OBJECTIVES FOR CHEMICALS
OPERABLE UNIT 2: LIME SLUDGE PONDS

Chemical	Basis for Remedial Objective	Acceptable Water Concentration (mg/L)	FMPC Action Level for a Single Operable Unit* (mg/L)
Aroclor - 1248	0.0005 (mg/L) MCL	0.0005	0.00013
Benzoic Acid	4 mg/kg/d RfD	140	35
Bis(2-ethylhexyl)phthalate	0.004 (mg/L) PMCL	0.004	0.001
2-Butanone	–	–	–
Carbon disulfide	–	–	–
Chlordane	0.002 (mg/L) PMCL	0.002	0.0005
di-n-butylphthalate	–	–	–
1,1-dichloroethane	0.091 $(mg/kg/d)^{-1}$ CPF	3.8×10^{-4}	9.5×10^{-5}
Methylene chloride	0.005 (mg/L) PMCL	0.005	0.00125
Phenol	0.6 (mg/kg/d) RfD	21.0	5.3
1,1,2-trichloro-1,2,2-trifluoroethane	30 (mg/kg/d) RfD	1.1×10^{3}	2.6×10^{2}
METALS			
Arsenic	0.05 mg/L MCL	0.05	0.01
Mercury	0.002 mg/kg/d RfD	0.002	0.0005

* Twenty-five percent of ARAR of risk-based standard

TABLE B-4

GROUNDWATER REMEDIAL ACTION OBJECTIVES FOR CHEMICALS
OPERABLE UNIT 2: ACTIVE FLY ASH PILE

Chemical	Basis for Remedial Objective	Acceptable Water Concentration (mg/L)	FMPC Action Level for a Single Operable Unit[a] (mg/L)
Acetone	0.1 (mg/kg/d) RfD	3.5	0.9
2-Butanone	–	–	–
Methylene chloride	0.005 (mg/L) PMCL	0.005	0.00125
1,1,1-trichloroethane	0.2 (mg/L) MCL	0.2	0.05
Toluene	2.0 (mg/L) PMCL	2.0	0.5
Uranium	0.003 mg/kg/d RfD	0.1	0.03

[a] Twenty-five percent of ARAR of risk-based standard

TABLE B-5

GROUNDWATER REMEDIAL ACTION OBJECTIVES FOR ORGANIC CHEMICALS
OPERABLE UNIT 2: INACTIVE FLY ASH DISPOSAL AREA

Chemical	Basis for Remedial Objective	Acceptable Water Concentration (mg/L)	FMPC Action Level for a Single Operable Unit[a] (mg/L)
Aroclor-1242	0.0005 (mg/L) PMCL	0.0005	1.3×10^{-4}
Aroclor-1254	0.0005 (mg/L) PMCL	0.0005	1.3×10^{-4}
Aroclor-1260	0.0005 (mg/L) PMCL	0.0005	1.3×10^{-4}

[a] Twenty-five percent of ARAR of risk-based standard

TABLE B-6

GROUNDWATER REMEDIAL ACTION OBJECTIVES FOR INORGANIC CHEMICALS
OPERABLE UNIT 2: INACTIVE FLY ASH DISPOSAL AREA

Chemical	Basis for Remedial Objective	Acceptable Water Concentration (mg/L)	FMPC Action Level for a Operable Unit[a] (mg/L)
Cadmium	0.005 mg/L PMCL	0.005	0.001
Lead	0.05 mg/L MCL	0.05	0.01
Mercury	0.002 (mg/L) MCL	0.002	0.0005

[a] Twenty-five percent of ARAR of risk-based standard

TABLE B-7

GROUNDWATER REMEDIAL ACTION OBJECTIVES FOR ORGANIC CHEMICALS
OPERABLE UNIT 2: SOUTHFIELD

Chemical	Basis for Remedial Objective	Acceptable Water Concentration (mg/L)	FMPC Action Level for a Single Operable Unit[a] (mg/L)
Aroclor-1242	0.0005 (mg/L) PMCL	0.0005	1.3×10^{-4}
Aroclor-1254	0.0005 (mg/L) PMCL	0.0005	1.3×10^{-4}
Aroclor-1260	0.0005 (mg/L) PMCL	0.0005	1.3×10^{-4}
Methylene chloride	0.005 (mg/L) PMCL	0.005	1.25×10^{-3}

[a] Twenty-five percent of ARAR of risk-based standard

TABLE B-8

GROUNDWATER REMEDIAL ACTION OBJECTIVES FOR INORGANIC CHEMICALS
OPERABLE UNIT 2: SOUTHFIELD AREA

Chemical	Basis for Remedial Objective	Acceptable Water Concentration (mg/L)	FMPC Action Level for a Single Operable Unit[a] (mg/L)
Cadmium	0.005 mg/L PMCL	0.005	0.001
Cobalt	–	–	–
Mercury	0.002 (mg/L) MCL	0.002	0.0005
Nickel	0.02 mg/kg/d RfD	0.7	0.18
Uranium	0.003 mg/kg/d RfD	0.1	0.03

[a] Twenty-five percent of ARAR of risk-based standard