999 G-000-705.14

TRANSMITTAL OF CLOSURE PLAN INFORMATION AND DATA FOR THE FEED MATERIALS PRODUCTION CENTER BULK STORAGE TANK T-5 AND T-6

01/18/1991

DOE-603-91
DOE-FMPC OEPA
79
LETTER

[redacted]

D[redacted]

FMPC Site Office
P.O. Box 398705
Cincinnati, Ohio 45239-8705
(513) 738-6319

999

JAN 1 8 1991

DOE-603-91

Mr. Gerry Ionannides, Director
Ohio Environmental Protection Agency
1800 WaterMark Drive
Columbus, OH 43266-1049

Dear Mr. Ionannides:

TRANSMITTAL OF CLOSURE PLAN INFORMATION AND DATA FOR THE FEED MATERIALS PRODUCTION CENTER BULK STORAGE TANK T-5 AND T-6

Enclosed is Revision 2 of the Closure Plan Information and Data for the FMPC Bulk Storage Tanks T-5 and T-6 modified in accordance with comments by Ohio EPA received by the FMPC on December 19, 1990.

One of the OEPA Notice of Deficiency (NOD) comments (#7) requested locations for background sampling points. The following information is provided as further clarification of our response in Section 3.3.4.2. In a December 12, 1990 telephone conversation with the Ohio EPA Southwest District Office, it was explained that FMPC is currently developing a Background Sampling Plan with sampling locations in off-site areas (primarily park land) which are undisturbed by FMPC operations. A meeting is to be held in the near future to review the selected locations and obtain concurrence of Ohio EPA.

This revision states that if no soil contamination above action specified levels is found and tanks and containment pad surface can be decontaminated to the specified standard, the Hazardous Waste Management Unit will be clean-closed under RCRA; however if soil or concrete contamination is detected at levels above action levels listed in the plan, then remediation of the soil, concrete or associated groundwater will be integrated as necessary, with response actions under Comprehensive Environmental Response Compensation and Liabiity Act at the FMPC.

If you have any questions, please contact David Rast at FTS 774-6322 or (513) 738-6322.

Sincerely,

Ray Hansen for

Gerald W. Westerbeck
FMPC Site Manager

DP-84:Rast

Enclosure: As stated

cc w/encl.:

G. E. Mitchell, OEPA-Dayton
P. D. Pardi, OEPA-Dayton
C. A. McCord, USEPA-V
M. Butler, USEPA-V
E. Schuessler, PRC

cc w/o encl.:

W. E. Muno, USEPA-V
J. Benetti, USEPA-V
K. J. Pierard, USEPA-V
D. A. Ullrich, USEPA-V

bcc w/o encl.:

W. D. Adams, EW-90, ORO
P. J. Gross, SE-31, ORO
R. P. Whitfield, EM-40, FORS
K. A. Hayes, EM-422, GTN
R. L. Glenn, Parsons
W. H. Britton, WMCO
S. W. Coyle, WMCO
S. M. Peterman, WMCO
J. D. Wood, ASI

999

CLOSURE PLAN
INFORMATION AND DATA FOR THE FEED MATERIALS PRODUCTION CENTER BULK STORAGE TANKS T-5 AND T-6

Revision 2
January 1991

Submitted by:

U.S. Department of Energy
Feed Materials Production Center
7400 Willey Road
Fernald, Ohio 45030

999

Revision 2: January 1991

CLOSURE PLAN INFORMATION AND DATA FOR THE FEED MATERIALS PRODUCTION CENTER BULK STORAGE TANKS T-5 AND T-6

Revision 2
January 1991

U. S. Department of Energy
Feed Materials Production Center
7400 Willey Road
Fernald, Ohio 45030

RI/FS
REFERENCE
LIBRARY

TABLE OF CONTENTS

Section	Title	Page
1.0	INTRODUCTION	1-1
1.1	Background	1-1
1.2	Purpose	1-2
1.3	Exclusions	1-2
1.3.1	Mixed Radioactive and RCRA Wastes	1-2
1.3.2	CERCLA Remedial and Removal Action Requirements for FMPC RCRA Closures	1-3
1.3.3	Financial and Liability Exemptions	1-4
2.0	FACILITY DESCRIPTION	2-1
2.1	Waste Management Unit Description	2-1
2.2	Waste Inventory	2-2
2.3	Current Use	2-3
2.4	Security	2-4
3.0	CLOSURE INFORMATION	3-1
3.1	Closure Objectives	3-1
3.2	Closure Methodology	3-2
3.3	Sampling and Analysis	3-3
3.3.1	Quality Assurance/Quality Control	3-3
3.3.2	Tank and Piping Cleaning	3-4
3.3.2.1	Preparation	3-4
3.3.2.2	Power Washing	3-4
3.3.2.3	Water Handling	3-5
3.3.2.4	Final Rinseate Samples	3-5
3.3.2.5	Verification Samples for the Tank T-3 and Pump	3-5
3.3.3	Containment Pad Cleaning	3-6
3.3.3.1	Preparation	3-6
3.3.3.2	Power Washing	3-6
3.3.3.3	Water Handling	3-7
3.3.3.4	Containment Pad Surface Rinseate Samples	3-7
3.3.3.5	Verification of Containment Pad Integrity	3-7
3.3.4	Soil Samples	3-8
3.3.4.1	Verification Soil Sampling Sets	3-8
3.3.4.2	Background Soil Samples	3-8
3.4	Equipment Decontamination and Disposal	3-8
3.5	Health and Safety	3-9
4.0	CLOSURE CERTIFICATION	4-1
4.1	RCRA Closure Standards	4-1
4.1.1	Standard of Clean For Soil Verification Samples	4-1
4.1.2	Decontamination Verification of Tanks, Containment Pad, and Piping	4-1
4.2	Certification Inspections	4-2
4.3	Certification Documents	4-2
4.4	Statement of Certification	4-3
4.5	Post-Closure Plan	4-3
4.6	Notice In Deed	4-3
5.0	CLOSURE SCHEDULE	5-1

LIST OF FIGURES

Figure	Title	Page
1	FMPC Site Location Map.	Pocket
2	FMPC Site Map Showing Locations of Tanks T-5 and T-6. . . .	Pocket
3	FMPC Site Drawings Showing Plan Layout and Piping of Tanks T-5 and T-6	Pocket
4	Pilot Plant Outside Tank Area Photograph	Pocket

LIST OF TABLES

Table	Title
1	DECONTAMINATION ACTION LEVELS FOR WATER AND RINSEATES
2	SELECTED VOLATILE AND SEMI-VOLATILE ORGANIC COMPOUNDS FOR SOIL SAMPLE TESTING (40 CFR 265.112(b) (6) and (OAC 3745-66-12 (A) (4))
3	TCLP METALS ANALYSES AND HOLDING TIMES
4	SCHEDULE FOR CLOSURE OF THE BULK STORAGE TANKS T-5 AND T-6

LIST OF APPENDICES

A	LABORATORY REPORTS OF WASTES STORED IN TANKS T-5 AND T-6
B	TANKS T-5 AND T-6 RCRA CLOSURE SAMPLING AND ANALYSIS PLAN
C	GUIDELINES FOR THE PREPARATION OF FMPC PROJECT/TASK SPECIFIC HEALTH AND SAFETY PLAN, JUNE 1990.

Revision 2: January 1991

CLOSURE PLAN INFORMATION AND DATA FOR THE FEED MATERIALS PRODUCTION CENTER BULK STORAGE TANKS T-5 AND T-6 U. S. DEPARTMENT OF ENERGY FEED MATERIALS PRODUCTION CENTER FERNALD, OHIO

1.0 INTRODUCTION

1.1 Background

The Feed Materials Production Center (FMPC) is a U.S. Department of Energy (DOE) owned facility located near Fernald, in Hamilton County, Ohio (Figure 1). FMPC was operated for the purpose of producing metallic uranium fuel elements, target cores and other uranium compounds for use at other DOE facilities in support of the U.S. Defense program. The facility has been in operation at this site since approximately 1950.

This closure plan information and data deals with two bulk storage tanks, numbers 5 and 6 (hereinafter referred to as Tanks T-5 and T-6). Tanks T-5 and T-6 were used for storage of thorium nitrate solutions from the time of their installation in 1969 until about 1980. The tanks are believed to have been empty from about 1980 until April 1984. From April 1984 until they were drained in 1989, the tanks were used to store mixed hazardous and radioactive solvent wastes. This closure plan information and data is being submitted to close Tanks T-5 and T-6 in accordance with OAC 3745-66 and 40 CFR 265 Subparts G and J.

Tanks T-5 and T-6 are located in a diked tank storage area west of the FMPC Pilot Plant along with 3 other tanks which have not been used for storage of RCRA hazardous wastes. Their location is indicated in Figure 2.

It should be noted that RCRA closure actions at the FMPC will be impacted by the ongoing actions required by the April 1990 US DOE/US EPA Consent Agreement. This Consent Agreement, which was entered into pursuant to Sections 106 and 120 of the Comprehensive Environmental Response Compensation and Liability Act (CERCLA), requires the FMPC to complete a Remedial Investigation/Feasibility Study (RI/FS). The purpose of the RI/FS is to identify remedial actions that are consistent with CERCLA regulations and the Consent Agreement.

Consistent with the terms of the Consent Agreement, the FMPC has divided the scope of the RI/FS into 5 Operable Units. Tanks T-5 and T-6, for which this closure plan information and data has been submitted, are included within the scope of Operable Unit 3, Production Area and Suspect Facilities.

Through the RI/FS process and the terms of the Consent Agreement the FMPC will:

1. establish site clean up levels,

2. select and conduct necessary response actions, either removal or remedial, and

3. implement any necessary long-term monitoring and surveillance of the facility and surrounding environment.

Based on the April 1990 Consent Agreement, response actions undertaken at the FMPC must be in accordance with CERCLA requirements and consistent with all other applicable or relevant and appropriate requirements, including regulations, rules, standards, and guidelines.

1.2 Purpose

This closure plan information and data for the Storage Tanks T-5 and T-6 is submitted in accordance with RCRA Interim Status Closure requirements. Applicable RCRA Interim Status Closure requirements, in Ohio Administrative Code OAC 3745-66 (40 CFR 265 Subpart G and Subpart J), require owners/operators of hazardous waste Treatment, Storage or Disposal (TSD) facilities to have written and approved closure plans for those units.

The actions that will be taken to close the storage Tanks T-5 and T-6 are presented in this closure plan information and data. Copies of this closure plan information and data and any subsequent revisions will be kept at the facility until final RCRA closure has been completed and certified in accordance with OAC 3745-66-10 to 3745-66-15, or until CERCLA remedial actions are completed.

It is the intent of the FMPC to insure efficient integration of all RCRA closure activities with related CERCLA response actions. This closure plan information and data has been prepared to insure closure actions are consistent with the RCRA requirements while adhering to the terms of the April 1990 US DOE/US EPA Consent Agreement.

1.3 Exclusions

1.3.1 Mixed Radioactive and RCRA Wastes

All FMPC wastes with a hazardous component or characteristic, with the exception of those originating in the on-site laboratory, have been handled as mixed low level wastes. The radioactive portion of mixed waste is not regulated under RCRA. Determination of the radionuclide component of most material on site is based upon analysis to assay the uranium content potentially recoverable from the material. For some materials, assay values are assigned based on prior sampling of the same or similar materials or upon process knowledge. In cases where assay

values have not been established, FMPC considers materials generated in the uranium processing area as radioactively contaminated. This determination is based upon process knowledge, experience in uranium production operations, and the fact that de minimis concentrations or below-regulatory-concern levels for radionuclides have not been established for the residues/wastes in question.

Recognizing the dual nature of these wastes, the FMPC stores mixed hazardous/ radioactive wastes in accordance with RCRA regulations as well as DOE orders concerning low level radioactive waste. These materials are stored pending the availability of acceptable treatment/disposal facilities for mixed waste.

DOE will provide Ohio EPA with the results of the radiological monitoring that will be conducted during the closure of Tanks T-5 and T-6. The radiological monitoring conducted during the closure will be performed in accordance with the existing FMPC Standard Operating Procedures which are used on all projects at the FMPC. The results of the radiological monitoring is provided to the Ohio EPA for informational purposes only.

1.3.2 CERCLA Remedial and Removal Action Requirements for FMPC RCRA Closures

If soil contamination and possible impacts on groundwater quality are indicated, or decontamination of the containment pad does not achieve acceptable clean up (based on analytical results - see Section 4.1), necessary response actions will be conducted under CERCLA. If tanks or pipe cannot be decontaminated to acceptable cleanup levels, the RCRA contaminated tanks, pipe or pump will be placed in an approved RCRA storage area.

Any remedy undertaken for removal/remediation of soil, groundwater, or contaminated concrete containment pad will be in accordance with the CERCLA program at the FMPC, pursuant to the US EPA/US DOE Federal Facilities Compliance Agreement dated July 18, 1986 and amended by the April 9, 1990 Consent Agreement.

The Consent Agreement and CERCLA regulations under 40 CFR Part 300 establish the framework for hazardous material contamination response actions at the FMPC. A Remedial Investigation and Feasibility Study (RI/FS) was initiated in 1986 to identify appropriate response actions for clean-up of contamination at the FMPC (subject to the Record of Decision, i.e., the ROD, for each of 5 operable units identified at the FMPC).

To comply with the Consent Agreement and CERCLA regulations, response actions must be evaluated to determine the types of activities necessary to abate threats to human health and the environment.

As a result, the type and schedule for response actions to address RCRA hazardous waste contamination of soils, groundwater and concrete containment pad at the FMPC will be determined pursuant to the requirements of the 1990 Consent Agreement. Any actions taken shall be consistent with RCRA regulations and all other applicable or relevant and appropriate requirements and guidance identified.

1.3.3 Financial and Liability Exemptions

The FMPC is a federally owned facility. According to OAC 3745-66-40 C, the Federal Government is exempt from financial requirements of OAC 3745-66-40 through OAC 3745-66-48. A similar exclusion from 40 CFR 265 Subpart H Financial Requirements is provided in 40 CFR 265.140(c).

2.0 FACILITY DESCRIPTION

2.1 Waste Management Unit Description

The Hazardous Waste Management Unit containing Bulk Storage Tanks T-5 and T-6 includes the following:

- Two - 10,000 gallon stainless steel tanks
- Associated piping and transfer lines
- Diked, concrete containment structure 28 feet by 45 feet with a 20-inch high dike, which has an approximately 28,000 gallon capacity.

Tanks T-5 and T-6 are in the containment structure with three (3) other tanks; T-2, T-3 and T-4. Tank 2 has a capacity of 7,707 gallons and contains a full tank of thorium nitrate. Tank 3 has a capacity of 8,000 gallons and is confirmed empty. Tank 4 has a capacity of 14,000 gallons and is confirmed empty. Both tanks 3 and 4 previously held thorium nitrate.

Tanks T-5 and T-6 are the two 10,000 gallon stainless steel tanks located west of the Pilot Plant (Figure 2). The two tanks contained a blend of the spent solvent 1,1,1-trichloroethane and mineral spirits. Part of this waste was generated at an off-site facility and shipped to the FMPC for recovery. Due to problems encountered with the solvent recovery operations, these operations were suspended and the remaining material was stored in T-5 and T-6. In response to concerns about the integrity of the tanks in 1989, the material was transferred to drums which are now stored at the FMPC in a RCRA approved storage unit. It is planned that the wastes ultimately will be shipped to the DOE K-1435 Incinerator in Oak Ridge, Tennessee for final disposition. Figure 3 shows the locations of the two tanks relative to the Pilot Plant and the other tanks in the containment area. Figure 4 ia a photograph of the tanks and containment area.

The scaled drawing, provided in Figure 3, includes a piping diagram (not to scale), the locations of the tanks on the containment pad, the diameters of the tanks, the layout of the containment pad; and the location of the overflow standpipe and drain assembly in the southeast corner of the containment pad.

The containment pad slopes gently to the southeast toward an overflow backup drain and standpipe as shown on Figure 3. The overflow drain which was cast in place with the pad, extends to approximately one foot below the surface of the containment pad. Attached to the drain is a three-inch diameter vertical standpipe that extends from top of the drain to slightly above the top of the containment dike. The standpipe is connected to a 90° elbow on top of the drain. The elbow is connected to a three-inch diameter pipe that passes through the east dike (below ground) and opens to the brick-lined containment pad to the southeast of tank T-2.

The purpose for the drain and standpipe is to provide a backup containment area for potentially contaminated rainwater, spills or tank leaks. The height of the

standpipe prevents inadvertent discharge into the drain line from the containment pad around T-5 and T-6. **There is no documentation to suggest, nor do historical accounts indicate, that the standpipe was ever removed.** Thus, the backup containment pad to the southeast is not considered to be part of the T-5 and T-6 hazardous waste management unit.

As can be noted on Figure 3, the two bulk solvent storage tanks are connected by overhead piping to tank T-3. According to historical documentation, tank T-3 was emptied of thorium nitrate to provide emergency backup storage capacity in the event of operating problems with or failure of Tanks T-5 and T-6.

In accordance with FMPC standard operating procedures, SOP 11-C-243 and SOP-11-C-240, routine inspections and emergency procedures were established for Tanks T-5 and T-6 and the containment area. Operating records were maintained in the FMPC Pilot Plant - Hazardous Waste Material Storage Facility Log and Record.

Available operating records and historical accounts do not suggest or indicate that any of the contents of T-5 and T-6 were ever transferred to T-3 and that the valves that would permit such a flow path were kept closed.

Inspection of the containment pad reveals that the concrete pad and dikes are in good condition. The containment dike has an asphaltic coating on the entire inside vertical surface. The coating extends slightly onto the horizontal surface of the containment pad and forms a fillet at the dike/pad joint. The horizontal surface of the containment pad does not appear to be coated or sealed.

2.2 Waste Inventory

In April 1984, waste solvents that had been stored in drums at FMPC, comprised primarily of distilled 1,1,1-trichloroethane and distillation still bottoms containing low concentrations of uranium, were placed in the tanks. Tank filling records indicate that approximately 165 drums and 143 drums of this material were placed in Tanks T-5 and T-6, respectively. It was also noted on the filling records that all drums were not full and that the contents of drums transferred to tank T-5 contained more sludge (presumably the still bottoms) than those transferred to T-6. Total volumes after this initial fill of solvents were reported as about 7,300 gallons in tank T-5 and 5,300 gallons in T-6.

Drummed material was transferred to the tanks using a portable, air-driven diaphragm pump. According to the operating procedure for the tanks, the drums from which material was pumped were located adjacent to, but just outside, the diked area west of the tank containment pad. The pump was placed within the containment area in case of leakage due to pump failure. Flexible hose was used to pump materials from the drums into the top manways of T-5 or T-6.

Available records indicate that limited volumes of spent solvents, paint, paint thinner and contaminated oil were periodically pumped from drums into the tanks until mid-1987. These wastes were generated by the paint shop, cleaning booth, garage and electric shop.

The maximum volumes of material noted to have been present in Tanks T-5 and T-6 are about 8,100 gallons and 5,400 gallons, respectively. These volumes are considered estimates because they are based on measured "outages" (depth of liquid in tank), which are converted to volumes using outage versus volume calibration tables.

Volume data were not generated when the tanks were drained in 1989. Rather, the weight of material drained from each tank was monitored as the waste was placed in drums. During the tank draining operations, each drum receiving waste was placed on a scale and filled until it contained 500 pounds of waste. One hundred-seventy-three (173) and 105 drums (each containing 500 pounds of material) were filled from the contents of T-5 and T-6, respectively.

Qualitative information on the composition of materials placed in tanks can be gained from tank filling (transfer) records. These records indicate that waste "dirty" solvents, contaminated oil, paint and paint thinner were placed in tank T-5. The "dirty" solvent also included sludge (still bottoms from solvent distillation). Material placed in tank T-6 consisted of clean solvent and contaminated oil.

In 1988, the contents of Tanks T-5 and T-6 were analyzed for a wide variety of parameters. In addition, to obtain representative analyses of the tank contents, samples from T-5 were collected at different depths as noted in the International Technology Corporation laboratory analysis report. Copies of these laboratory analysis reports are provided as Appendix A.

As would be expected, the higher concentrations of the relatively high specific gravity 1,1,1-trichloroethane were found in the samples taken from the lower portion of Tank T-5. Presumably, oil and other solvents known to have been placed in the tank, as well as contaminants (including an aqueous phase) associated with the "dirty" solvent, were stratified above the fluids and sludge with higher 1,1,1-trichloroethane concentrations.

As shown by the analysis reports, the tanks contained wastes with high concentrations of 1,1,1-trichloroethane and lesser concentrations of metals and other constituents for which analyses were performed. It was also noted that uranium is present at concentrations of 0.002 to 0.004 percent by weight. As a result, the materials are considered radioactive and hazardous mixed wastes.

2.3 Current Use

Originally, the solvent mixtures stored in Tanks T-5 and T-6 were to be processed for solvent recovery at the FMPC. When it was decided that solvent processing was to be suspended, the materials were left in Tanks T-5 and T-6 for storage until 1989. There is no indication in the available records that any material was removed from the tanks before 1989.

During a routine inspection in June 1989, an area of approximately one-half inch diameter on the surface of tank T-5 was noted to be damp and corroded. The

corroded areas were located around a welded joint on tank T-5. A subsequent ultrasonic thickness inspection of Tanks T-5 and T-6 was performed. The inspection revealed the presence of a pinhole in tank T-5 and an additional visual inspection identified another corroded area. There was no evidence, however, of dripping or the release of tank contents into the containment area. A patch was placed over the pinhole to prevent any further release. It was estimated that less than one ounce of material was released to the environment.

As a result of concerns about the integrity of the tanks, the fluid contents of the tanks were transferred to drums in June-July 1989. Sludge remaining in tank T-5 was transferred to drums in October 1989. The drums of waste were placed in a FMPC RCRA storage unit pending transport to and incineration at Oak Ridge.

Records which document the transfer of the contents of drums into Tanks T-5 and T-6 do not indicate the occurrence of any spills or leaks during the transfer operations.

2.4 Security

As with all Department of Energy (DOE) facilities, plant security at the FMPC is strict. The entire FMPC processing area, which includes the Pilot Plant and the adjoining Tank T-5 and T-6 area, is surrounded by chain link fencing and monitored by on-site security personnel. All employees and visitors enter through one of several guarded entrances into the facility.

3.0 CLOSURE INFORMATION

3.1 Closure Objectives

This Closure plan information and data for the Storage Tanks T-5 and T-6 is in accordance with performance standards in OAC 3745-66-11 (40 CFR 265.111). These standards include the following:

* Minimizing the need for further maintenance by decontaminating the Tanks, associated piping and the containment pad. Post-closure maintenance is not required where no hazardous wastes or unacceptable levels of contamination remain after closure (i.e., clean closed).

* Controlling, minimizing or eliminating, to the extent necessary to protect human health and the environment, the escape of hazardous waste, hazardous waste constituents, leachate, contaminated rainfall, or waste decomposition products to the ground or surface waters or to the atmosphere.

* Conducting closure actions in accordance with the approved RCRA Closure Plan.

In accordance with this closure plan information and data the following actions will be taken:

1. The containment pad and dikes, Tanks T-5 and T-6 and approximately 100 lineal feet of 1 inch and 50 feet of 2-1/2-inch stainless steel pipe (i.e., piping associated with T-5, T-6, and connections to T-3) will be decontaminated and/or tested to confirm contamination is below Decontamination Action Levels listed in Table 1.

2. The decontamination verification rinseate samples will be collected and tested. Any equipment, parts, or related materials which cannot be cleaned to acceptable limits will be dismantled and moved to an approved FMPC RCRA storage unit.

3. Rinseate samples from the drain on the southeast corner of the containment pad, tank T-3 and the pump and piping will be collected to confirm the assertions that none of the RCRA hazardous wastes from Tanks T-5 and T-6 flowed or were pumped into the backup containment pad or tank T-3.

4. The soils under and around the Unit will be tested for contamination.

5. The wash and rinse waste waters, hazardous waste residues, and any other waste generated during RCRA closure activities will be tested and characterized in accordance with the FMPC Waste Analysis and Waste Determination Plans.

6. If the containment structures cannot be decontaminated or soil or groundwater contamination is identified, removal or remediation required

for completion of clean closure will be conducted under the FMPC CERCLA Program in accordance with the US DOE/US EPA April 1990 Consent Agreement (Section 1.3.2).

3.2 Closure Methodology

This plan addresses the procedures that will be followed to accomplish closure of storage Tanks T-5 and T-6 and constitutes only a partial closure of the entire FMPC facility. The T-5 and T-6 Bulk Storage Tanks will be closed in accordance with this closure plan information and data.

The details of the sampling and analyses for RCRA closure activities are given in Appendix B. The schedule and sequence for closure activities are shown in Table 4.

The closure methodology for Tanks T-5 and T-6 will involve:

1. A high-pressure wash with deionized water to include:

   - the interior of Tanks T-5 and T-6,
   - the interior of associated stainless steel piping, and
   - the concrete containment pad and dikes.

   Verification of decontamination will be made based on collection and analysis of final rinseate samples from each tank, associated piping, and the concrete pad and dike containment. Decontamination will be considered to be verified if contaminants in the final rinseate samples contain contamination at levels below the Decontamination Action Levels listed in Table 1.

   If required to achieve decontamination, three attempts at high-pressure washing will be made. If necessary to achieve decontamination, a detergent solution will be used, followed by a high pressure rinse with deionized water.

2. Separate rinseate samples of deionized water flushed through Tank T-3 (or waste resides from T-3, if available), the pump and the containment pad drain will be collected and analyzed. These samples will be used to verify the FMPC assertions that no hazardous wastes were pumped to Tank T-3 or drained to the emergency back up containment pad. The samples will be analyzed for the compounds listed in Tables 2 and 3.

3. Five perimeter soil samples, within five feet of the edge of the containment pad, and four soil samples from underneath the containment pad will be taken to evaluate the potential for soil contamination around and under the pad.

Soils adjacent to and beneath the unit will be considered clean and allow for RCRA Closure Certification at the completion RCRA Partial Closure actions if:

- o Organic compounds are below the decontamination levels listed in Table 1,
- o Total metals concentrations (for the 8 RCRA TCLP metals listed in Table 3) are less than 2 standard deviations above the mean concentration in background samples determined by the FMPC Background Sampling Plan, which is currently under development and subject to Ohio EPA approval.

The wash and rinse waste waters, and hazardous waste residues, and any other waste generated during RCRA closure activities will be tested and characterized in accordance with the FMPC Waste Analysis and Waste Determination Plans.

As previously discussed, the type and schedule for any response actions to address RCRA hazardous waste contamination of soils, equipment, construction materials and groundwater at the FMPC will be determined under the FMPC CERCLA Program pursuant to the requirements of the 1990 Consent Agreement. Any actions taken shall be consistent with RCRA regulations and all other applicable or relevant and appropriate requirements and guidance identified.

3.3 Sampling and Analysis

3.3.1 Quality Assurance/Quality Control

Duplicate samples will be taken for the units to confirm the laboratory's QA/QC program and document analytical precision. One duplicate sample will be taken for every five samples collected within the RCRA unit.

To reduce laboratory bias, the duplicate sample will be labeled and numbered in such a way that will not indicate that the sample is a duplicate. This information will be noted in the field log book for later use. Laboratory analyses shall follow SW-846 methods. The laboratory utilized by the FMPC to analyze RCRA unit samples shall show that it has a quality assurance/quality control plan for each parameter of interest.

The QA/QC procedures shall be similar to those in the Ohio EPA/Ohio Department of Health's "RCRA Laboratory Assurance Project Plan" (1983). Quality control procedures employed shall document the accuracy of the analytical procedures. FMPC shall also require the contracted laboratory to run a matrix spike sample and a matrix spike duplicate sample.

In addition, to address needs of the FMPC CERCLA program requirements, supplemental samples will be collected in accordance with the RI/FS QAPP.

3.3.2 Tank and Piping Cleaning and Decontamination

3.3.2.1 Preparation

Initial closure actions will require the removal of any remaining residues within Tanks T-5 and T-6 and the piping and valve systems. The interiors of Tanks T-3, T-5 and T-6 will be visually inspected (without personnel entry) to determine the presence of any residues by removing manway covers and lighting the tank interiors. If present, the residues will be pumped into 55 gallon drums. These drums will then be moved to a RCRA storage unit pending final disposition pursuant to the FMPC Waste Analysis and Waste Determination Plans.

Approximately 100 feet of 1-inch and 50 feet of 2.5-inch stainless steel piping has been identified based on connections to the Tanks T-5, T-6, and T-3. Those sections of pipe not needed for removal of residue materials and the tank wash and rinse wastes will be disconnected, marked, and placed on clean plastic sheeting for cleaning and collection of rinseate samples to verify they are clean (i.e., contaminate levels are below the Decontamination Action Levels listed in Table 1).

The pump is currently disconnected from the inlet piping from Tanks T-5 and T-6. The pipe section and flange connection previously coming from Tanks T-5 and T-6 will be removed and placed on the plastic sheeting for cleaning and sampling along with the other piping. The piping on the discharge side of the pump will be disconnected to allow collection of a rinseate sample from the pump to verify the assertion that none of the waste solvent mixtures have passed through the pump.

3.3.2.2 Power Washing

The decontamination of the tanks will be accomplished through the use of high-pressure wash using deionized water. The Tanks will then be rinsed with high pressure deionized water spray. Decontamination wash and rinse waters will be drained from the bottom of the tank using the existing 1-inch piping and valves.

The 2-inch drain line piping that had been directly connected to Tanks T-5 and T-6 will then be washed and rinsed. If volume of wastes generated by decontamination of piping and valves are found to be excessive, the piping and valves will be dismantled and placed into appropriate containers and stored in an FMPC RCRA storage facility pending disposal consistent with the FMPC Waste Analysis and Waste Determination Plans.

Piping sections used to connect Tank T-3 to the common piping and pump (see Figure 3) will only be flushed with a deionized water rinse for sampling and analysis to verify assertions that no RCRA wastes have been pumped into Tank T-3.

3.3.2.3 Water Handling

The wash and rinseates waste waters will be collected in appropriate containers and moved to an FMPC RCRA storage unit. The wastes will then be sampled and analyzed in accordance with the FMPC Waste Analysis and Waste Determination Plans. If the fluids are hazardous, they will be stored in the RCRA storage unit pending final disposition. If they are non-hazardous, the waste waters will be treated and disposed of in the FMPC waste water system.

3.3.2.4 Final Rinseate Samples

To determine if tanks and piping have been decontaminated effectively, final clean rinseate samples will be collected for analysis, to include:

- A rinseate sample from each tank for analysis.
- A composite sample of the final rinseates for piping and valves that were cleaned.

Decontamination will be verified when contaminant levels in the rinseate samples are less than the Decontamination Action Levels for rinseates shown in Table 1. If decontamination is not verified by the analysis of the final rinseate samples, additional high pressure washing, rinsing, and sampling and analysis of the final rinseate will be conducted. If acceptable decontamination is still not achieved after three attempts or it appears that decontamination is not possible without generating an excessive volume of hazardous waste water any contaminated pipe segments shall be cut and placed into drums and the contaminated Tanks and/or drums of contaminated piping will be transferred to a RCRA storage facility at the FMPC pending final disposition in accordance with the FMPC Waste Determination Plan.

All sampled materials will be held until analytical results are available. If concentrations are below the levels listed in Table 1, the materials can be disposed of as non-hazardous solid waste.

3.3.2.5 Verification Samples for the Tank T-3 and Pump

Based on the available information the FMPC asserts that none of the wastes from Tanks T-5 and T-6 were pumped to Tank T-3. To verify this assertion samples will be collected from the Tank 3, the connecting piping, and the pump.

If residues are found during initial visual observations of the interior of Tank T-3, a sample of the residue will be collected. If there is not sufficient residue material for sampling, Tank T-3 will be rinsed using deionized water and the rinseate will be collected. In either case, a sample of the residue or the rinseate will be submitted for analyses.

For verification samples from the pump and connecting piping, deionized water

will be flushed through the pump and the marked pipe sections. A sample of the pump rinseate and a composite sample of the rinseate from the connecting piping from Tank T-3 will be collected and analyzed.

All the above samples will be analyzed for constituents identified in Tables 2 and 3. Analytical results that are less than the decontamination levels listed in Table 1 will be considered verification that no RCRA hazardous wastes from T-5 or T-6 have been pumped to Tank T-3.

In the unlikely event that hazardous waste contamination is found in T-3 or the associated pump and T-3 piping, a revision of the closure plan information and data with a request for time extension will be prepared and submitted to the Ohio EPA.

3.3.3 Containment Pad Cleaning

3.3.3.1 Preparation

Prior to high-pressure washing of the containment pad, the pad will be inspected and, if necessary, sealed. Any cracks and expansion joints greater than 1/8 inch wide found on the pad along the edges of the side walls will be sealed with expanding Portland cement grout. Sealing of the joints and cracks will prevent any water and/or potential contamination from the surface power washing from migrating into the cracks and into the underlying soil. Care will be used to fill only the cracks and joints; the grout will be allowed to set at least 96 hours to cure and harden prior to power washing.

3.3.3.2 Power Washing

Once all of the preparations have been made, the containment pad will be power washed with a deionized water using a high-pressure power washing device. The device will deliver high pressure deionized water to a wand that will be used by site personnel to clean the pad. Cleaning will begin on the western portion of the containment pad and progressively directed toward the southeast corner where it will be collected and pumped into 55 gallon waste drums.

The power washer is capable of delivering over 10,000 psi of water pressure. At this pressure, the water jet is capable of removing a thin film of containment pad concrete, stains and residue, leaving the pad in a clean state.

Once the containment pad has been cleaned by the power washer, the field supervisor will decide whether to clean the pad a second time or to collect a rinseate sample from the pad. The decision will be based on the ease of cleaning, condition of any stains and residue from the containment pad and the condition of the pad after cleaning.

3.3.3.3 Water Handling

All wash water generated during the Tank containment pad cleaning will be directed toward the southeast corner and pumped, using a clean peristaltic pump or other suitable device, into marked and labeled waste drums.

Each cycle for cleaning of the entire containment pad is expected to take approximately one hour to complete. At this rate, the volume of wash water is expected to total approximately 960 gallons per cycle.

The wash water will be stored in 55 gallon drums and moved to a RCRA storage area until it can be properly characterized based on the laboratory analysis of a sample of the composite power wash water. Sampling, analysis, and characterization of the power wash wastes will be in accordance with the FMPC Waste Analysis and Waste Determination Plans.

3.3.3.4 Containment Pad Surface Rinseate Samples

Upon completion of power washing, a decontamination verification sample from the containment surface will be collected by flooding the containment pad with deionized water. The water will either flow naturally or will be squeegeed into the collection point in the southeast corner as described in Appendix B, "Tanks T-5 and T-6 RCRA Closure Sampling and Analysis Plan".

Decontamination will be verified when contaminant levels in the rinseate samples are less than the Decontamination Action Levels for rinseates shown in Table 1. If decontamination is not verified by the analysis of the final rinseate samples, additional high pressure washing, rinsing, and sampling and analysis of the final rinseate will be conducted. If acceptable decontamination is still not achieved after three attempts, additional response actions will be addressed by the CERCLA Program in accordance with the US DOE/US EPA April 1990 Consent Agreement.

3.3.3.5 Verification of Containment Pad Integrity

Verification that no contaminated rain water or spilled wastes were allowed to flow into the backup containment pad will be based on the results from the analysis of a rinseate sample from the drain. The verification will be demonstrated by results in which no contamination is found in the rinseate sample in excess of the Decontamination Action Levels listed in Table 1. The sampling procedure for testing the drain line is provided in Appendix B.

In the unlikely event that hazardous waste contamination is found in rinseate samples from the drain line, a revision of the closure plan information and data with a request for time extension will be prepared and submitted to the Ohio EPA.

3.3.4 Soil Samples

Based on available inspection records, the containment pad and dike appear to be in good condition. To confirm the assertion that no soil contamination has occurred, soils will be sampled and analyzed in accordance with SW-846.

All soil samples collected as part of this closure process will be collected in accordance with the "Tanks T-5 and T-6 RCRA Closure Sampling and Analysis Plan" made part of this closure plan information and data as Appendix B. The soil samples will be tested for selected volatile and semi-volatile compounds and TCLP metals listed in Tables 2 and 3.

Four soil samples will be taken from soil beneath the containment pad and five perimeter soil samples will be taken within five feet beyond the edge of the pad to evaluate the potential for soil contamination under and around the pad. Soil sampling procedures are discussed in Appendix B.

3.3.4.1 Verification Soil Sampling Sets

Following statistical evaluation of the nine soil sample sets, additional samples will be collected if:

1. Additional samples are necessary to validate soils are clean (based on a 90 percent confidence interval),

2. Analysis of the previous sample(s) are invalidated by sampling or analytical errors,

3.3.4.2 Background Soil Samples

Prior to initiating soil sampling around Tanks T-5 and T-6, 16 background soil samples will be collected and analyzed for total RCRA metals. The results from the laboratory analyses of these samples will be used for all future RCRA closures at the FMPC. The Background Sampling Plan is under development and implementation will begin upon final review and approval by the Ohio EPA.

3.4 Equipment Decontamination and Disposal

Prior to any sampling activities, all equipment used during the sampling effort will be properly decontaminated, reducing the possibility of cross contamination from other RCRA units. Once sampling has begun, all equipment used during the sampling will be decontaminated following each sample collection effort. Any disposable clothing, contaminated rinseate or equipment (plastic sheeting, etc.) shall be drummed, labeled and stored at an FMPC RCRA storage facility for disposal according to all applicable regulations.

3.5 Health and Safety

Selection of the protective equipment for closure activities will depend on information supplied by FMPC on-site evaluation and assessment of risk. In addition, radioactivity levels measured by FMPC will be used to determine if the samples can be analyzed by the contract laboratory.

Additional screening may be required before shipment to the laboratory to further categorize the samples according to the level of radiation hazard. Radiation survey procedures and limits on samples prior to shipment will be in accordance with FMPC procedures.

A Task/Project specific Health and Safety plan, pursuant to requirements in the current FMPC Site Health and Safety Plan, will be required before RCRA Closure activities are initiated. The specific procedures, including personnel and equipment decontamination procedures, will be based on the required health and safety hazard analysis which will characterize hazards and conditions applicable at the time. A copy of the guidelines for the preparation of a Task/Project Specific Health and Safety Plan is included in Appendix C for information only.

4.0 CLOSURE CERTIFICATION

The RCRA closure and certifications will be made as described in the Section 4.2 through 5.0, unless the soil sampling or final decontamination rinseates indicate that soil or concrete containment pad structures are contaminated (i.e, above acceptable levels listed in Sections 4.1.1 and 4.1.2).

If response actions are necessary to address RCRA hazardous waste contamination of soils, groundwater and equipment/materials at the FMPC, these actions will be determined pursuant to the requirements of the 1990 Consent Agreement. Any actions taken shall be consistent with RCRA regulations and all other applicable or relevant and appropriate requirements and guidance identified (Section 1.3.2).

NOTE: Section 4.1 through Section 5.0 are only applicable to RCRA Closure actions that do not involve response actions subject to CERCLA requirements at the FMPC (Section 1.3.2).

4.1 RCRA Closure Standards

4.1.1 Standard of Clean For Soil Verification Samples

Soils around and beneath the containment pad will be considered clean for RCRA Closure if the soil samples contain:

* metal (listed in Table 3) concentrations less than the mean background concentration plus two standard deviations or

* organic constituents that are less than the limits listed in Table 1.

4.1.2 Decontamination Verification of Tanks, Containment Pad, and Piping

Decontamination will be verified based on samples from final rinseate of the Tanks T-5 and T-6 and the associated piping and pump. Decontamination will be declared to be completed when final rinseate samples contain concentrations of total RCRA metals and targeted organic constituents at levels below the Decontamination Action Levels in Table 1.

Based on guidance from the Ohio EPA regarding clean levels for decontamination rinseates, the basis for Decontamination Action Levels listed in Table 1 are:

(1) Public drinking water maximum contaminant level (MCL) for hazardous waste constituents as promulgated in 40 CFR 141.11 (OAC 3745-81-11) for inorganics and 40 CFR 141.12 and 141.60 (OAC 3745-81-12) for organics;

(2) If an MCL is not available and a maximum contaminant level goal (MCLG), excluding those set at zero, is promulgated in 40 CFR 141.50, the MCLG is used; or

(3) If the MCL or MCLG is less than the contaminant's practical analytical quantification limit, using methods found in USEPA Publication SW-846, that limit shall be used as the clean standard. The practical quantitation limits for analytes, based on referenced SW-846 methods, are listed in Table 2.

(4) If neither an MCL or an MCLG is available, 1 mg/l is used as the Decontamination Action Levels.

4.2 Certification Inspections

Certification inspections by an independent engineer are an integral part of the RCRA closure certification activities. The major emphasis of closure inspections will be as follows:

* To ensure proper sample collection techniques are used throughout the RCRA closure process.

* To ensure that the pad is properly cleaned and decontaminated.

* To ensure that all rinseate water is properly stored, labeled and characterized.

4.3 Certification Documents

RCRA closure certification documentation shall include a daily log of activities, field notes recorded by the owner and or the owner's representative during closure activities, copies of the laboratory analyses reports, copies of the hazardous waste manifests (if utilized), and chain of custody forms used for sample handling and tracking. All RCRA closure certification documentation shall be compiled and retained at the FMPC for inspection/access by Ohio EPA.

4.4 Statement of Certification

The FMPC and an independent registered engineer shall submit Certification of RCRA Closure within 60 days after unit closure is complete. The Certification will meet the requirements of OAC 3745-66-15 and 40 CFR 265.115 and will be worded as follows:

"Based on information made available to me, I ...,... (Title), do hereby certify that to the best of my knowledge , the Storage Tanks T-5 and T-6 have been closed in accordance with the closure plan information and data for the Storage Tanks T-5 and T-6 as approved by the Ohio EPA on...(date)."

4.5 Post-Closure Plan

If contaminated soil cannot be removed or decontaminated during closure, OAC 3745-66-97 and 40 CFR 264.197 require post-closure care in accordance with closure and post-closure care requirements that apply to landfills under OAC 3745-68-10 and 40 CFR 264.310, respectively. However, if required, response actions consistent with OAC 3745-68-10 will be conducted under the FMPC CERCLA Program, in accordance with the April 1990 US DOE/US EPA Consent Agreement (Section 1.3.2).

4.6 Notice In Deed

A notation in the property deed is required under OAC 3745-66-19 (B) (1) which involves post-closure care. In the event that long-term care for contamination from T-5 and T-6 is conducted under FMPC CERCLA Program , a notation will be made in the FMPC property deed.

5.0 CLOSURE SCHEDULE

It is anticipated that the FMPC will initiate closure of the Tanks T-5 and T-6 upon receipt of the closure plan information and data approvals. Assuming no modifications to the plan are required, closure activities are to be completed within 240 days from the date of Ohio EPA approval. The schedule for closure is provided in Table 4.

Meeting this schedule is contingent upon completion of sampling of 16 background sampling locations within 65 days after initiating closure activities (i.e. possibly before Ohio EPA approval of FMPC Background Sampling Plan). If significant modification of the FMPC Background Sampling Plan is subsequently required by OEPA, an extension of the time required for completion of the closure may be necessary.

The Ohio EPA's facility inspector shall be contacted at least five (5) business days in advance of all activities associated with soil sampling and tank, piping system, and containment pad cleaning or rinseate sample collection.

TABLE 1

DECONTAMINATION ACTION LEVELS (mg/l)

Compound	CAS No.	MCL/MCLG [1]	Decontamination Action Level [2]
Benzene [3]	71-43-2	0.005	0.005
Carbon tetrachloride [3]	53-23-5	0.005	0.005
Chlorinated Fluorocarbons	general class		1.0
Chlorobenzene [3]	108-90-7		1.0
Chloroform [3]	67-66-3	0.10	0.10
Chloromethane	74-87-3		1.0
Cresol (total) [3]	multiple isomers		1.0
1,2-Dichlorobenzene	95-50-1		1.0
1,4-Dichlorobenzene [3]	106-46-7	0.75	0.75
1,1-Dichloroethane	75-34-3		1.0
1,2-Dichloroethane [3]	107-06-2	0.005	0.005
1,1-Dichloroethylene [3]	75-35-4	0.007	0.007
2,4-Dinitrotoluene [3]	121-14-2		1.0
Hexachlorobenzene [3]	118-74-1		1.0
Hexachloro-1,3-butadiene [3]	87-68-3		1.0
Hexachloroethane [3]	67-72-1		1.0
Methyl ethyl ketone [3]	78-93-3		1.0
Methylene chloride	75-09-2		1.0
Nitrobenzene [3]	98-95-3		1.0
Pentachlorophenol [3]	87-86-5		1.0
Pyridine [3]	110-86-1		1.0
Tetrachloroethylene [3]	127-18-4		1.0
1,1,1-Trichloroethane	71-55-6	0.20	0.20
1,1,2-Trichloroethane	79-00-5		1.0
Trichloroethylene [3]	79-01-6	0.005	0.005
1,1,2-Trichloro-1,2,2-trifluoroethane	76-13-1		1.0
Trichlorofluoromethane	75-69-4		1.0
Vinyl chloride [3]	75-01-4	0.002	0.002
Arsenic [3]	7440-38-2	0.05	0.05
Barium [3]	7440-39-3	1.0	1.0
Cadmium [3]	7440-43-9	0.01	0.01
Chromium [3]	7440-47-3	0.05	0.05
Lead [3]	7439-92-1	0.05	0.05
Mercury [3]	7439-97-6	0.002	0.002
Selenium [3]	7782-49-2	0.01	0.01
Silver [3]	7440-22-4	0.05	0.05

1 Maximum Contaminant Levels or Maximum Contaminant Level Goals as listed in 40 CFR 141.11, 141.12, 141.50 and 141.60.

2 Basis for determining Decontamination Action Levels is discussed in Section 4.1.2 of this closure plan information and data.

3 TCLP Listed Compounds.

TABLE 2

SELECTED VOLATILE AND SEMI-VOLATILE ORGANIC COMPOUNDS FOR SOIL SAMPLE ANALYSES

Compound	CAS No.	SW-846 Analytical Method	Practical Quantitation Limits [1] Water ug/l	Soil/Solid ug/kg
Benzene [2]	71-43-2	8240	5	5
Carbon tetrachloride [2]	53-23-5	8240	5	5
Chlorinated Fluorocarbons	general class	8240 [3]	NA	NA
Chlorobenzene [2]	108-90-7	8240	5	5
Chloroform [2]	67-66-3	8240	5	5
Chloromethane	74-87-3	8240	10	10
Cresol (total) [2]	multiple isomers	8270	10	660
1,2-Dichlorobenzene	95-50-1	8270	10	660
1,4-Dichlorobenzene [2]	106-46-7	8270	10	660
1,1-Dichloroethane	75-34-3	8240	5	5
1,2-Dichloroethane [2]	107-06-2	8240	5	5
1,1-Dichloroethylene [2]	75-35-4	8240	5	5
2,4-Dinitrotoluene [2]	121-14-2	8270	10	660
Hexachlorobenzene [2]	118-74-1	8270	10	660
Hexachloro-1,3-butadiene [2]	87-68-3	8270	10	660
Hexachloroethane [2]	67-72-1	8270	10	660
Methyl ethyl ketone [2]	78-93-3	8240	100	100
Methylene chloride	75-09-2	8240	5	5
Nitrobenzene [2]	98-95-3	8270	10	66
Pentachlorophenol [2]	87-86-5	8270	50	3300
Pyridine [2]	110-86-1	8270	10 [4]	10 [4]
Tetrachloroethylene [2]	127-18-4	8240	5	5
1,1,1-Trichloroethane	71-55-6	8240	5	5
1,1,2-Trichloroethane	79-00-5	8240	5	5
Trichloroethylene [2]	79-01-6	8240	5	5
1,1,2-Trichloro-1,2,2-trifluoroethane	76-13-1	8240 [3]	N/A	N/A
Trichlorofluoromethane	75-69-4	8240	5	10
Vinyl chloride [2]	75-01-4	8240	10	10

1 Quantification limits depend on both matrix and interfering compounds.

2 TCLP listed organic compounds.

3 Although not listed as analytes in the 846 Method, a computer search of GC/MS data reference file can be used to identify/detect other volatile organic compounds.

4 No established SW-846 Quantitation Limit. Values are estimated based on Sensitivity of method for similar volatile and semi-volatile compounds.

TABLE 3

TCLP METALS CONCENTRATIONS [1] AND TOTAL METALS ANALYSES

Metal	TCLP[2] Maximum Concentration (mg/l)	Total Metals[3] Action Level Concentration (mg/g)	SW-846 Analytical Method	Holding Time
Arsenic	5.0	0.1	6010	6 months
Barium	100.0	2.0	6010	6 months
Cadmium	1.0	0.02	6010	6 months
Chromium	5.0	0.1	6010	6 months
Lead	5.0	0.1	6010	6 months
Mercury	0.2	0.004	7470	28 days
Selenium	1.0	0.02	6010	6 months
Silver	5.0	0.1	6010	6 months

1 From OAC 3745-51-24 (40 CFR 261.24). TCLP listed organic compounds of concern are included in Table 2. Holding time for organic samples is limited to 14 days before extraction and an additional 14 day after extraction to analyses.

2 TCLP, SW-846 Method 1311 (as defined in 40 CFR 261 Appendix II).

3 A solid sample subject to TCLP extraction procedures yields an extract that represents a 20 to 1 dilution of the original concentration. Therefore, a solid sample with a total concentration less than 20 times the TCLP limit could not exceed the TCLP limit. As a result, soils with a contamination less than 20 times the TCLP for a non-volatile compound can be characterized as non-hazardous as defined by RCRA TCLP without performing a TCLP Method 1311 extraction and analysis.

TABLE 4

SCHEDULE FOR CLOSURE OF THE BULK STORAGE TANKS T-5 AND T-6

	Action	Cumulative Days to Complete
o	Plan Approval by Ohio EPA	0
o	Pump Accumulated Rainwater, Inspect Containment Pad and Patch Cracks and Joints (Section 3.3.3.1)	10
o	Inspect Tanks T-3, T-5, and T-6 for Residual Wastes and Dismantle Piping System Tanks (Section 1.3.2.1)	15
o	Decontaminate Tanks T-5 and T-6 and Associated Piping; Rinse Tank T-3 and Associated Piping and Pump; and Collect Final Rinseate Samples (Sections 3.3.2.1 through 3.3.2.4).	45
o	High Pressure Wash and Rinse Containment Pad and Collect Rinseate Samples (Sections 3.3.3.2 through 3.3.3.5)	55
o	Collect Soil Samples.	65
o	Review Analytical Results for Confirmation of Tank and Piping Decontamination and Verification of Tank T-3 Non-Regulated Status.	100 [1]
o	Second Tank and Piping Decontamination and Final Rinseate Sampling (As Necessary)	105
o	Review Analytical Results for Confirmation of Containment Pad Decontamination.	120
o	Second Containment Pad Decontamination (If Needed).	135

[1] In the event that Tank T-3 is found to have contained Hazardous Wastes a revision to the closure plan information and data will be prepared and submitted to include Tank T-3.

TABLE 4
(Continued)

SCHEDULE FOR CLOSURE OF THE BULK STORAGE TANKS T-5 AND T-6

	Action	Cumulative Days to Complete
o	Review Analytical Results for Second Tank and Piping Decontamination.	150
o	Third Tank and Piping Decontamination and Final Sampling (As Necessary).	160
o	Review Analytical Results for Second Containment Pad Decontamination.	175
o	Third Containment Pad Decontamination and Final Sampling (As Necessary).	180
o	Review of Analytical Results for All Rinseate and Soil Samples	225 [2]
o	Complete All Field Work.	240 [2]
o	Compile Certification Record and Submit Closure Certification Statement.	300 [2]

[2] Assumes no contamination found which will require additional removal/remedial measures. Any closure actions requiring response actions subject to the CERCLA requirements at the FMPC shall be completed under the FMPC CERCLA program (Section 1.3.2).

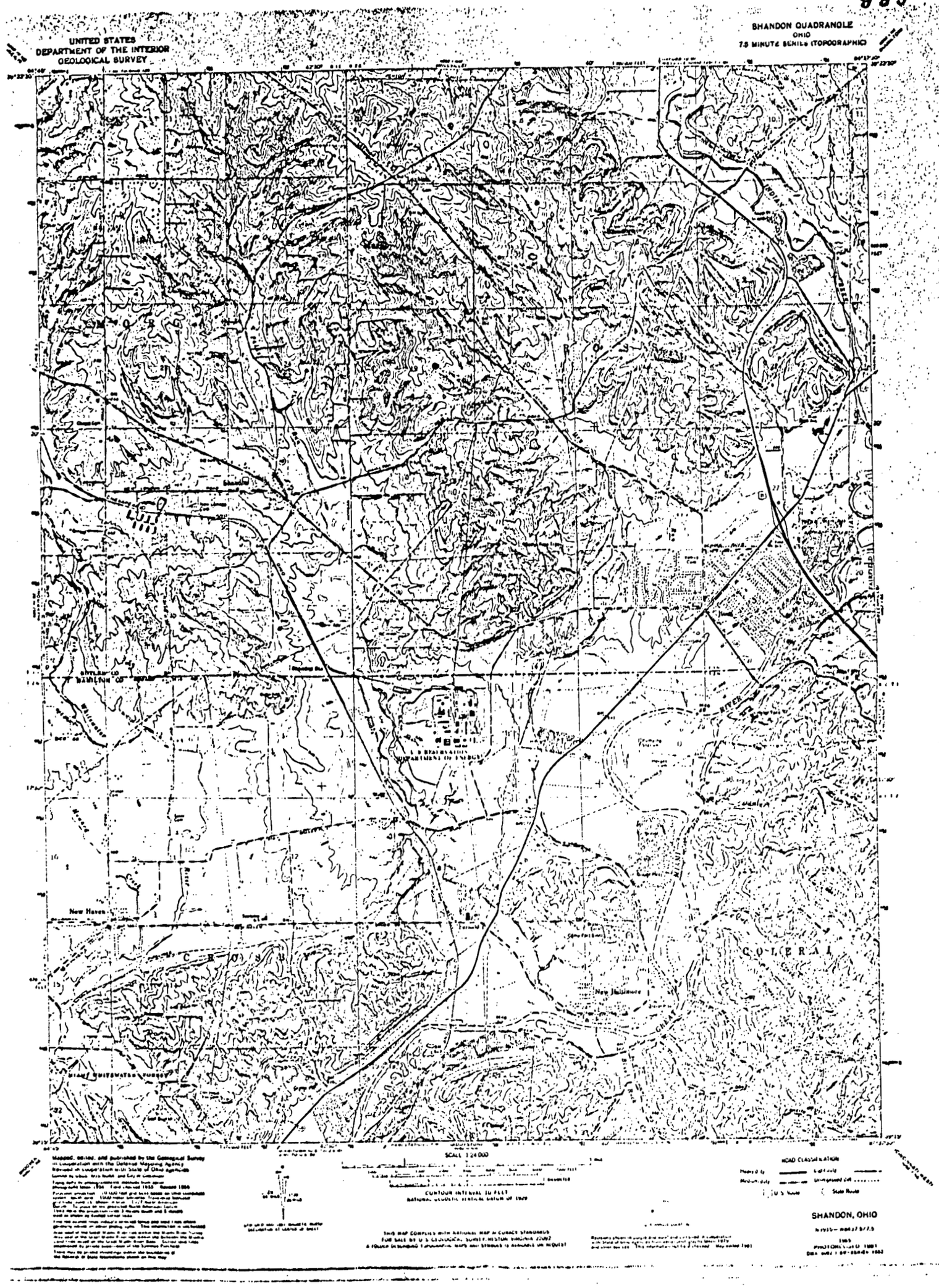

FIGURE 1: F.M.P.C. SITE LOCATION MAP

JAN 11 '91

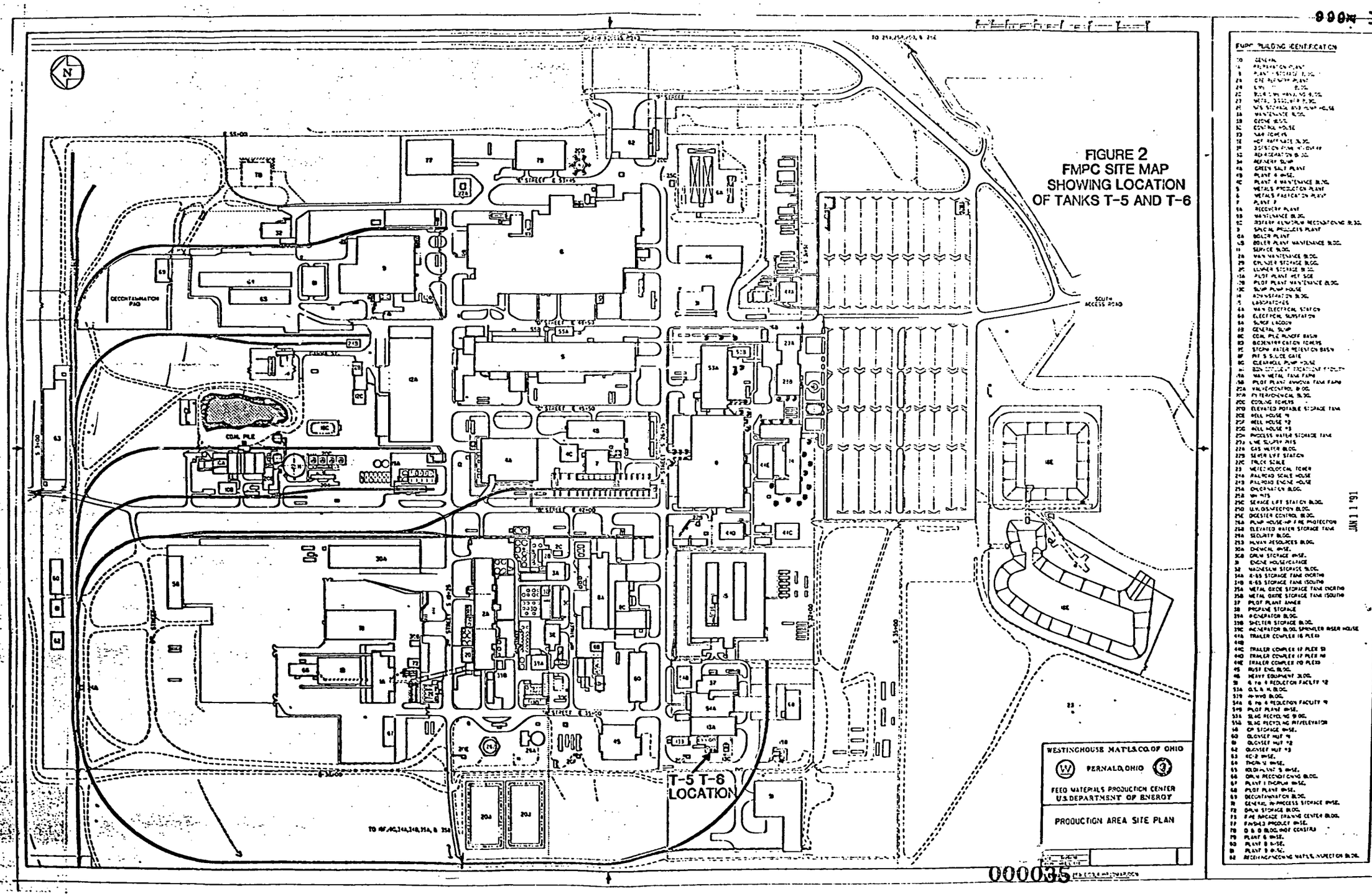
FIGURE 2
FMPC SITE MAP
SHOWING LOCATION
OF TANKS T-5 AND T-6
T-5 T-6
LOCATION
COAL PILE
DECONTAMINATION PAD
SOUTH ACCESS ROAD
WESTINGHOUSE MAT'LS.CO.OF OHIO
FERNALD, OHIO
FEED MATERIALS PRODUCTION CENTER
U.S.DEPARTMENT OF ENERGY
PRODUCTION AREA SITE PLAN
JAN 1 1 '91
000035

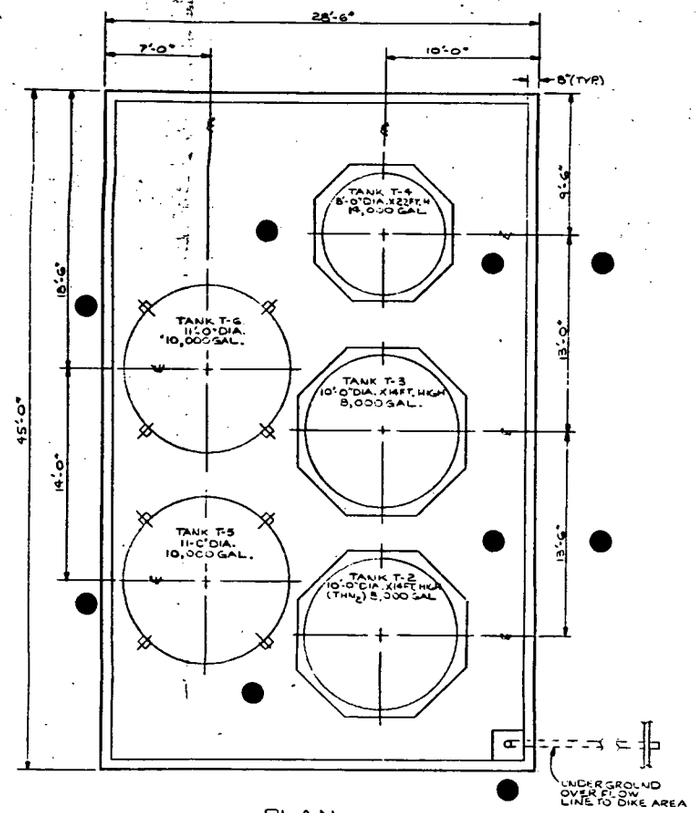

PLAN

SCALE: 1/8" = 1'-0"

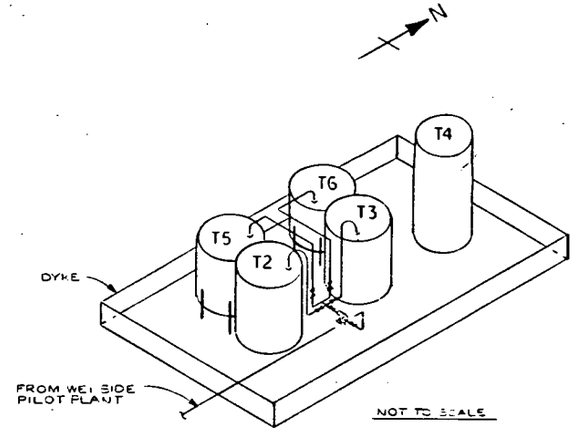

FIGURE - 3

TANK T5 AND T6 LAYOUT & PIPING DIAGRAM

● = SOIL SAMPLING LOCATION (PROPOSED)

000036

FIGURE-3

NO.	REVISIONS	DATE	DWN BY	APPD.	NO.	REVISIONS	DATE	DWN BY	APPD.	REF. DWG. NO.	DESCRIPTION

UNLESS OTHERWISE SPECIFIED DIMENSIONS ARE IN INCHES
TOLERANCES ARE
FRACTIONS ± 1/16
ANGLES ± 0° 30'
DECIMALS
.X ± .1
.XX ± .03
.XXX ± .005
.XXXX ± .0005
DWG. RELEASE DATE

APPROVALS

CHEMICAL		I R S & T	
CIVIL & STR.		MAINTENANCE	
ELECTRICAL		NU SAFETY	
ENGINEER		Q.A.	
INSTRUMENT		PRODUCTION	
MECHANICAL		FIRE & SAFETY	
		WASTE MANAGE.	
CHECKED		D.O.E.	
APPROVED		SECURITY	

WESTINGHOUSE MAT'LS. CO. OF OHIO

FERNALD, OHIO

FEED MATERIALS PRODUCTION CENTER
U.S. DEPARTMENT OF ENERGY

PILOT PLANT — OUTSIDE TANK AREA

THORIUM HOLD TANK
RETENTION DIKE
PLAN

REF. NO. 15-45	13X	5500	M	00769	0
DATE 1-4-91					
DRAWN BY J. NORMAN					

FIGURE 4

BULK STORAGE TANKS T5 & T6

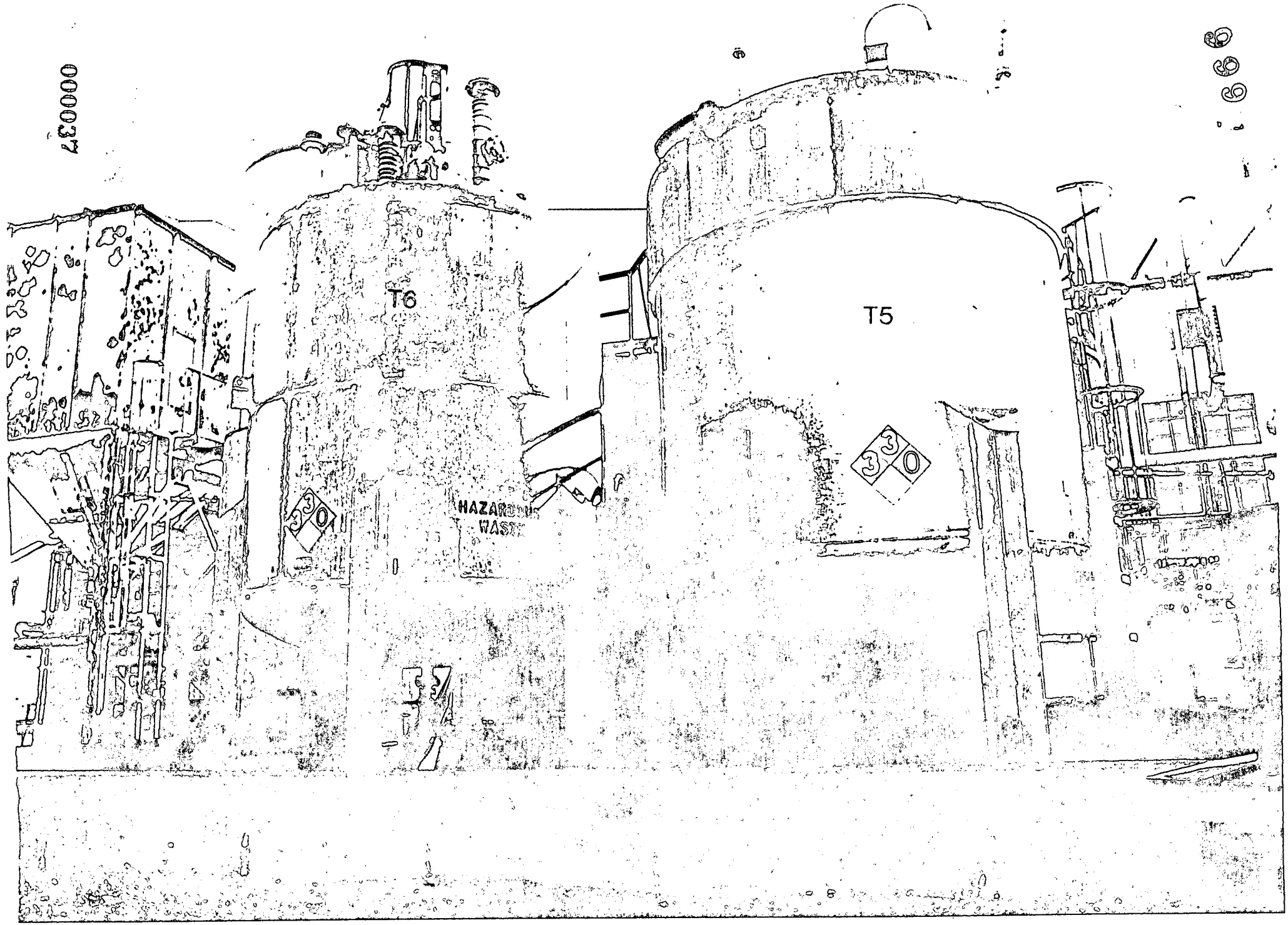

000037

Revision 2: January 1991

APPENDIX A: Laboratory Reports of Wastes Stored in Tanks T-5 and T-6

	TANK T5	TANK T6
1. Waste Category	Non-PCB solvents and chemicals	Non-PCB solvents and chemic
2. Name of Waste	solvent still bottoms (1,1,1-Trichloroethane)	solvent (1,1,1-Trichloroethane)
3. Water, wt. %	24.8	0.06
4. Suspended Solids, wt. %	0.57	<0.01
5. Phase Separation	Two phases present	No phase separation
6. Ash, wt. %	0.30	<0.01
7. Kinematic Viscosity, cST @ 25°c ①	(A) 740 (B) 3.7	3.0
8. Flash Point, °F	N.D. [No flash point detected; sample b.p. @ 155° F]	N.D. [No flash point detected; sample b.p. @ 155° F]
9. Heat of Combustion, BTU/16	5300	3200
10. Density, g/ml @ 25°c	1.140	1.309
11. Acidity, N	0.003	0.002
12. Alkalinity, g/KOH/g	NA	NA
13. pH, Standard Units	7.5	3.7
14. wt. % Retained (1/32")	0.02	<0.01
15. C, %	15.	6.0
16. H, %	2.9	0.94
17. O, %	Could not analyze	Could not analyze
18. Cl, %	43.1	48.3
19. F, %	36 ppm	35 ppm
10. S, %	0.02	0.08
11. P, %	0.24	0.13
12. PCB, µg/g	<5	<5
13. Specific Gravity	1.140	1.309
14. Radioactive Contamination	Total Alpha = 43 Total Beta = 56 Total Gamma = 27	Total Alpha = 22 Total Beta = 23 Total Gamma = 4.4

	TANK T5	TANK T6
15. Uranium %U	0.002	0.004
16. Uranium +-Daughters	^{235}U = 0.775 wt. %	^{235}U = 0.998 wt. %
17. Other Radionuclides, % (A) = top portion (B) = bottom	NA	NA
18. Spectrochemical Analyses: (ppm unless indicated)		
Ag	<0.7	<0.01
Al	23	0.02
As	<25	<0.2
B	1.8	<0.01
Ba	<2	<0.01
Be	0.2	<0.01
Bi	0.4	NR [uranium interference]
Ca	180	0.10
Cd	<3	<0.02
Co	<2	<0.01
Cr	3	<0.2
Cu	27	0.4
Fe	8.82%	2
Ga	<0.7	<0.01
Ge	<0.7	<0.01
In	<2	<0.01
K	4.14%	5.82%
Li	<100	<100
Mg	18	0.8
Mn	0.4	<0.01
Mo	0.5	<0.01
Na	0.08%	<0.2

	TANK T5	TANK T6
Spectrochemical Analyses: (continued)		
Nb	<2	<0.01
Ni	5	NR [uranium interference]
Pb	9	<0.01
Pd	<2	<0.01
Pt	<2	<0.01
Ru	<25	<0.4
Sb	<5	<0.05
Si	72	0.5
Sm	3	0.03
Sr	<11	<0.10
Ta	<25	<0.2
Te	<25	<0.2
Ti	4	<0.01
Tl	<25	<0.2
V	<0.2	<0.01
W	<45	<0.4
Zm	54	<0.2
Zr	<3	0.10

999 TANK 5

INTERNATIONAL TECHNOLOGY CORPORATION

ANALYTICAL SERVICES

1550 Bear Creek Road • P O Box 549 • Oak Ridge Tennessee 37831 • 615-482-9707

CERTIFICATE OF ANALYSIS

TO ASI-Fernald Office
ATTN: L. T. Murphy
10845 Hamilton Cleves Road
Ross, OH 45061

DATE REPORTED February 22, 1988
PROJECT CODE ITEP 35080
ORDER NUMBER 602.09.02
PAGE 1 OF 2
Job No.: 303317

Sample Description: Four (4) TCLP extract samples and one (1) TCLP blank received December 17, 1987

	Blank (µg/liter)	Percent by Weight			
		1 Foot	3 Foot	6 Foot	9 Foot
Methylene Chloride	<5	ND	ND	ND	ND
1,1,1-Trichloroethane	7	9	66	61	98
Tetrachloroethene	ND	ND	ND	ND	ND

ND = Not detected.

Analyzed by EPA Method 624.

Approved by Laboratory Manager
Title

000042

999 Tank 5

INTERNATIONAL TECHNOLOGY CORPORATION

ANALYTICAL SERVICES

1550 Bear Creek Road • P O Box 549 • Oak Ridge Tennessee 37831 • 615-482-9707

CERTIFICATE OF ANALYSIS

TO ASI-Fernald Office
ATTN: L. T. Murphy
10845 Hamilton Cleves Road
Ross, OH 45061

DATE REPORTED February 22, 1988
PROJECT CODE ITEP 35080
ORDER NUMBER 602.09.02
PAGE 2 OF 2
Job No.: 303317

Sample Description: Four (4) TCLP extract samples and one (1) TCLP blank received December 17, 1987

Concentration units are mg/liter (ppm)

ICAP METALS SCAN

	1 Foot*	3 Foot	6 Foot	9 Foot	Blank
Aluminum	3.58	0.08	<0.05	<0.05	<0.05
Antimony	<0.05	0.29	0.11	<0.05	<0.05
Arsenic	0.46	0.34	0.24	<0.2	<0.2
Barium	0.20	0.765	0.612	0.789	<0.002
Beryllium	0.002	0.0029	0.009	0.008	<0.001
Cadmium	0.425	0.002	<0.002	<0.002	<0.002
Chromium	0.18	<0.02	<0.02	<0.02	<0.02
Copper	19.0	0.51	0.22	0.31	<0.01
Iron	15.8	0.32	0.29	0.29	<0.005
Lead	0.05	<0.05	<0.05	<0.05	<0.05
Lithium	0.40	<0.03	0.36	0.20	<0.03
Magnesium	49.7	0.07	0.05	0.01	<0.005
Manganese	19.1	0.03	<0.001	<0.001	<0.001
Nickel	2.31	<0.02	<0.02	<0.02	<0.02
Selenium	<0.2	<0.2	<0.2	<0.2	<0.2
Silver	0.02	<0.01	<0.01	<0.01	<0.01
Sodium	5,900	1,410	1,340	1,350	1.10
Thallium	<0.3	<0.3	<0.3	<0.3	<0.3
Titanium	0.069	<0.003	<0.003	<0.003	<0.003
Zinc	54.4	0.90	0.30	0.37	<0.01
Mercury	0.001	<0.0002	<0.0002	<0.0002	<0.0002

*Sample at 1 Foot analyzed as total metals.

Approved by Laboratory Manager
Title

000043

Revision 2: January 1991

APPENDIX B: Tanks T-5 and T-6 RCRA Closure Sampling and Analysis Plan

APPENDIX B

TANKS T-5 AND T-6 RCRA CLOSURE SAMPLING AND ANALYSIS PLAN

Revision 2
January, 1991

U.S. Department of Energy
Feed Materials Production Center
7400 Willey Road
Fernald, Ohio 45030

TABLE OF CONTENTS

Section	Title	Page
1.0	INTRODUCTION	B-1
2.0	QUALITY ASSURANCE/QUALITY CONTROL	B-2
3.0	WATER AND RINSEATE SAMPLING	B-3
3.1	Power Wash Water Samples	B-3
3.2	Tank Rinseate Samples	B-4
3.3	Piping and Pump Rinseate Samples	B-4
3.4	Containment Pad Surface and Rinseate Samples	B-4
3.5	Sampling Equipment Rinseate Sample	B-4
3.6	Other Materials Samples	B-5
3.7	Water and Rinseate Analysis	B-5
4.0	SOIL SAMPLING PROCEDURES	B-6
4.1	Sampling Technique	B-6
4.1.1	Sample Collection Methodology	B-7
4.1.2	Core Hole Plugging	B-7
4.2	Soil Sample Locations	B-7
4.2.1	Soil Sampling	B-7
4.3	Sample Analysis	B-7
4.3.1	Soil Samples	B-7
4.3.2	Background Soil Samples	B-8
5.0	SAMPLE HANDLING PROCEDURES	B-9
5.1	Sample Bottles	B-9
5.2	On-Site Handling Procedure	B-9
5.3	Shipping Procedures	B-9
5.4	Field Logbook	B-10
5.5	Chain Of Custody	B-10
6.0	WASTE MANAGEMENT	B-15
6.1	RCRA Determination Criteria For Closure Waste	B-15
7.0	SAMPLING EQUIPMENT	B-16
8.0	REPORT OF FINDINGS	B-17
9.0	HEALTH AND SAFETY	B-18
10.0	DECONTAMINATION PROCEDURES FOR SAMPLING EQUIPMENT	B-19
10.1	General Information	B-19
10.2	Equipment Decontamination Procedures	B-19
10.3	Collection and Handling of Equipment Rinseate	B-21

LIST OF FIGURES

Figure	Title	Page
B-1	FMPC Chain-of-Custody Record	B-12
B-2	FMPC Report of Chemical Analyses	B-13
B-3	FMPC Label	B-14

LIST OF TABLES

Table	Title	Page
B-1	SELECTED VOLATILE AND SEMI-VOLATILE ORGANIC COMPOUNDS FOR SOIL SAMPLE ANALYSIS (40 CFR 265.112(b)(6) and OAC 3745-66-12(A)(4))	B-22
B-2	TCLP METALS ANALYSES AND HOLDING TIMES	B-23

APPENDIX B
TANKS T-5 AND T-6 RCRA CLOSURE
SAMPLING AND ANALYSIS PLAN

1.0 INTRODUCTION

Five basic categories of samples will be taken during closure activities for bulk storage tanks T-5 and T-6. They include:

1. Decontamination verification samples of the final rinseate from the Tanks T-5 and T-6, the piping connected to T-5 and T-6, and the containment pad surface will be collected to demonstrate that decontamination has been completed.

2. Verification samples of rinseates to demonstrate that Tank T-3, piping and pump connected to T-3, and the containment pad drain line to the backup containment pad have not been contaminated with RCRA hazardous wastes.

3. Quality control samples collected from the high-pressure power wash unit, the supply source of the deionized water, and sampling equipment decontamination rinseates.

4. Waste characterization samples collected from waste waters and solid wastes generated during closure actions.

5. Soil samples collected from beneath the containment pad and adjacent areas.

2.0 QUALITY ASSURANCE/QUALITY CONTROL

Duplicate samples will be taken to confirm the laboratory's QA/QC program and document analytical precision. One duplicate sample will be taken for every five samples collected within the RCRA unit.

To reduce laboratory bias, the duplicate sample will be labeled and numbered in such a way that will not indicate that the sample is a duplicate. This information will be noted in the field book for later use. Laboratory analyses shall follow SW-846 methods and the laboratory utilized by the FMPC to analyze RCRA unit samples shall show that it has a quality assurance/quality control plan for each parameter of interest.

The QA/QC procedures shall be similar to that in the Ohio EPA/Ohio Department of Health's "RCRA Laboratory Assurance Project Plan" (1983). Quality control procedures employed shall document the accuracy of the procedures. FMPC shall also request a matrix spike sample and a matrix spike duplicate sample be run by the contracted laboratory.

Three types of field QA/QC samples will be collected to evaluate other potential sources of contamination. These include:

* Equipment blanks collected from the high-pressure power wash unit (Section 3.1)

* A sample of the deionized water used to decontaminate the equipment during closure will be collected at the supply source of the deionized water (Section 3.2).

* Equipment rinseate samples to evaluate the possibility of cross-contamination between samples (Section 3.3)

3.0 WATER AND RINSEATE SAMPLING

3.1 Power Wash Water Samples

Quality Assurance (QA) samples of the deionized water will be collected and analyzed for each decontamination event. QA Samples will include:

- o deionized water collected from the deionizer and any water storage tank or container used,
- o deionized water that is flushed through the high pressure cleaning system and collected at the jet nozzle at the end on the cleaning wand, and
- o if a detergent solution is used to assist in decontamination, a sample of the detergent solution used.

Wash and rinse waste waters generated during decontamination will be collected and pumped into 55 gallon waste drums. Waste waters generated from the following decontamination activities will be collected in separate drum lots for analysis and storage pending waste characterizations and determinations:

- o Tank T-5,
- o Tank T-6,
- o Tank T-3,
- o Piping previously connected to T-5,
- o Piping previously connected to T-6,
- o Piping previously connected to T-3, and
- o Storage tank containment pad.

Composite samples will be collected from each lot of drums from the decontamination activities listed. Composited samples will be immediately placed in the proper laboratory containers and stored in an ice-filled cooler until transferred to the sample processing station.

Decontamination wastes will be evaluated in accordance with the FMPC Waste Analysis and Waste Determination Plans. If waste waters are found to be non-hazardous they will be emptied into the FMPC waste water treatment system. Wastes found to be RCRA hazardous wastes will be stored in an FMPC hazardous waste storage unit pending disposal in a manner consistent with waste determinations.

3.2 Tank Rinseate Samples

Upon completion of decontamination of Tanks T-5 and T-6, samples will be taken from a composite of the final deionized water rinse from each tank. If enough of the residual materials are found in Tank T-3, a sample of the residue will be collected. Otherwise, Tank T-3 will be rinsed with deionized water. A composite of the rinseate will then be sampled and tested to verify that no RCRA hazardous wastes have been stored in Tank T-3.

3.3 Piping and Pump Rinseate Samples

Piping sections associated with Tanks T-5 and T-6 will be decontaminated in separate groups. Upon completion of each group of piping, samples of the composited final rinseates will be collected and tested to confirm decontamination.

Piping sections associated with Tank T-3 connections to the common piping with T-5 and T-6 will be rinsed with deionized water. Samples of the composited rinseates from the pipe sections will be collected and tested to verify the FMPC assertion that no RCRA hazardous wastes had been stored in Tank T-3.

The pump through which wastes could have been pumped from Tanks T-5 and T-6 to Tank T-3 will be flushed with deionized water. Samples of this rinseate will be collected and tested to verify the FMPC assertion that no RCRA hazardous wastes had been pumped to Tank T-3.

3.4 Containment Pad Surface and Rinseate Samples

After the containment pad has been cleaned, the surface of the concrete pad will then be flooded with deionized water and allowed to soak. The resulting solution will be brushed, wiped or squeegeed towards the southeast corner for collection. Samples of the rinseate will be collected with a properly decontaminated peristaltic pump or other suitable device to confirm decontamination.

In addition to confirming decontamination of the containment pad, rinseate samples will be collected from the protected drain line leading to the back up containment pad to the southeast of the containment Pad containing Tanks T-5 and T-6. An expandable drain plug equipped with a sample cock will be inserted in the outlet of the drain line. The standpipe and drain line will be flooded with deionized water and allowed to soak. Samples of this rinse water will be collected from the sample cock on the drain outlet plug.

3.5 Sampling Equipment Rinseate Sample

Samples of a composite of the rinseate collected from the decontamination of the sampling and cleaning equipment will be collected for laboratory analysis. A sample of water from each of the drums will be collected and composited into a

clean glass container. After all of the drums have been sampled, the composite water samples will be immediately placed in the proper laboratory containers and stored in an ice-filled cooler until transferred to the sample processing station.

3.6 Other Materials Samples

At this time, the FMPC proposes that no samples of the plastic sheeting, gloves, etc. be taken. Procedures for properly collecting a representative sample of these items are not well defined in SW-846. Any disposable clothing or contaminated sampling materials shall be drummed, labeled and stored at an FMPC, RCRA storage facility for disposal according to all applicable regulations. Waste determinations for these materials will be based on information made from analysis of the decontamination waste waters and rinseate samples collected for verification of decontamination.

3.7 Water and Rinseate Analysis

All rinseate samples collected during the closure activities will be tested for analytes listed in Table B-1 and B-2. When samples are collected they will be immediately placed in the proper laboratory containers and stored in an ice-filled cooler until transferred to the sample processing station. Sample handling procedures are discussed in Section 5.0 of this document.

4.0 SOIL SAMPLING PROCEDURES

4.1 Sampling Technique

Prior to all concrete coring and soil sampling activities and after all work is completed at one location, all sampling and coring equipment will be properly decontaminated following the procedures outlined in Section 10.0 of this document.

To be able to sample the native soils below the reinforced concrete containment pad, FMPC proposes to use a jack hammer, concrete coring machine or concrete saw to core through the concrete. The selection of proper methods, or combination of methods will be made by the site RCRA Engineer.

Prior to the concrete coring operations, site blueprints will be reviewed to determine if there are any known underground utilities, pipes, wires or other similar structures which, if breached, would cause a safety problem. These underground structures will be well marked at the unit.

A core hole will be advanced through the concrete, cutting through reinforcement bars and other obstructions in the concrete. Coring will continue until the top of the base gravel (the gravel below the concrete but above the native soil) is reached.

Once the base gravel is reached, all concrete chips will be removed from the hole by hand, wearing clean heavy work gloves. All of the concrete chips and other material produced as a result of this coring operation will be collected at the site, placed in properly labeled 55 gallon drums, and temporarily stored in an approved RCRA storage unit at FMPC until an analysis can be made for a final RCRA waste determination.

4.1.1 Sample Collection Methodology

After the gravel has been removed as described above, three sample sets will be taken at each sample location with a bucket auger. The sample sets will be taken at the surface and at depth intervals of 1 to 2 feet, and 2 to 3 feet as measured from the shallowest sampleable media or auger refusal, which ever occurs first.

Clean chemically resistant gloves will be utilized whenever contact with a sample or the sampling equipment is imminent. The soil samples will be placed from the auger into 4-ounce wide mouth glass jars with Teflon-lined lids, using a clean stainless steel spatula and eliminating as much headspace in the jar as possible, sealed and stored in an ice-filled cooler until transferred to the sample processing station. A notation in the logbook and laboratory analysis report shall note the headspace in each of the sample jars.

4.1.2 Core Hole Plugging

Once the soil sample is collected from the hole, the core and soil bore will be filled with expanding Portland cement grout to a level slightly higher than the surrounding concrete, reducing ponding and promoting runoff.

4.2 Soil Sample Locations

4.2.1 Soil Sampling

Soil samples will consist of four sets of soil taken within the containment pad area. The proposed directed sample locations are identified in Figure 3 in the T-5 and T-6 Closure Plan Information and Data. These soil samples will be collected by coring or boring through the pad and sampling from the native soil underlying the containment pad as described in Section 4.1.

In addition to the four soil samples taken within the pad, five additional sets of soil samples will be taken at directed locations within a five-foot perimeter area around the containment pad and dikes. The proposed perimeter soil sample locations are also identified in Figure 3 in the Closure Plan Information and Data.

4.3 Sample Analysis

4.3.1 Soil Samples

The soil samples collected from beneath the containment pad and adjacent areas will be submitted for laboratory analysis of analytes listed in Tables B-1 and B-2.

4.3.2 Background Soil Samples

Prior to initiating soil sampling around Tanks T-5 and T-6, 16 background soil samples will be collected and analyzed for total RCRA metals. The results from the laboratory analyses of these samples will be used for all future RCRA closures at the FMPC. The Background Sampling Plan is under development and implementation will begin upon final review and approval by the Ohio EPA.

Each soil sample set will consist of a soil sample taken at the surface, a depth between 1-2 feet, and 2-3 feet, or auger refusal at each of the sixteen locations. Decontamination of sampling equipment, soil sampling techniques, and laboratory analysis will follow the guidelines specified in Sections 4, 5 and 10 of this sampling plan.

Soils in the area of the RCRA unit shall be considered to be contaminated if the total metals (TCLP listed) concentrations exceed the mean background metals concentration plus two standard deviations.

Consistent with discussion with the Ohio EPA Southwest District Office on December 12, 1990, background soil samples shall be from locations with soil types similar to those identified at the FMPC. The Background Sampling Plan is under development and implementation will begin upon final review and approval by the Ohio EPA.

5.0 SAMPLE HANDLING PROCEDURES

5.1 Sample Bottles

Prior to the beginning of any sampling effort, sampling bottles will be ordered from the laboratory performing the analyses. All sample bottles will arrive at the site in a clean condition. Sample containers will be inspected prior to filling with samples. Broken containers and those where cleanliness is questioned will not be used.

Water samples to be analyzed for volatile and semi-volatile compounds will be collected in 40 ml vials with teflon septa. Water samples will be filled to the brim and sealed in the 40 ml vials without any headspace. Soil samples to be analyzed for volatile and semi-volatile compounds will be collected in 4 ounce jars with teflon lids, eliminating as much headspace as possible.

Soil and water samples collected for metals analyses will be collected in individual 4 ounce glass jars with teflon liners in the lids, eliminating as much headspace as possible. Water samples collected for metals will be filtered using a 0.40 micron filter and properly preserved in the field.

5.2 On-Site Handling Procedure

Once a sample has been placed inside a sample container, the container will be sealed, labeled and logged onto the chain of custody form. Samples will be placed into a chilled thermal ice chest or other suitable chilled storage container. Upon completion of sampling all samples, along with signed and completed chain of custody, will be taken to the FMPC sample processing location to be properly packaged and labeled in accordance FMPC analytical laboratory procedures and requirements.

5.3 Shipping Procedures

FMPC personnel shall stand by for possible carrier request to open shipping containers for inspection or to modify packaging. FMPC shall notify the carrier before packing to ascertain local packaging requirements. FMPC personnel shall also remain in the departure area until the carrier is on its way.

5.4 Field Logbook

An up-to-date field logbook will document all information pertinent to the field survey and sampling. The logbook will be bound with consecutively numbered pages that are 8-1/2 by 11 inches. At a minimum the entries in the logbook will include the following:

* Weather conditions
* Location of sampling point
* Name and address of field contact
* Producer of waste and address
* Type of process producing waste
* Type of waste
* Suspected waste composition, including concentrations
* Number and volume of sample taken
* Purpose of sampling (e.g., closure)
* Description of sampling point and sampling methodology
* Date and time of collection
* Collector's sample identification number(s)
* Sample description and how transported (e.g., name of laboratory, UPS, Federal Express)
* References, such as maps or photographs of the sampling site
* Field observations
* Any field measurements made (e.g., Ph, flammability)
* Signatures of personnel responsible for observations
* Names of sampling personnel

The logbook will record sufficient information so that anyone can reconstruct the sampling without reliance on the collector's memory. Also, the logbook shall be stored safely.

5.5 Chain Of Custody

To establish the documentation necessary to trace sample possession from the time of collection, a chain-of-custody record (Figure B-1) will be filled out and accompany every sample. The record shall contain the following information:

* Sample number
* Signature of collector, date and time of collection
* Waste type
* Signature of persons involved in the chain of possession
* Inclusive dates of possession

A sample analysis request sheet (Figure B-2) and sample label (Figure B-3) will accompany the sample on delivery to the laboratory. The field portion of this form will be completed by the person collecting the sample and shall include most of the pertinent information noted in the logbook. The laboratory portion of this form shall be completed by laboratory personnel and shall include the

following information:

* Name of person receiving the sample
* Laboratory sample number
* Date and time of sample receipt
* Sample allocation
* Analyses to be performed

The sample shall be delivered to the laboratory for analysis as soon as practicable to meet sample holding time limits.

The sample shall be delivered to the person in the laboratory authorized to receive the samples. Additional documentation to be used is listed in the sampling procedures. The documents include items such as:

* Sampling Deviation/Special Handling Requirements
* Sample Weight Ticket
* Sampling Equipment Cleaning Check-off sheet
* Laboratory Sample Label
* Sample Seal
* Custody Transfer Record

Sample analysis results will be returned to:

The Westinghouse Materials Company of Ohio
Post Office Box 398704
Cincinnati, Ohio 45239

FIGURE B-1

FMPC
CHAIN-OF-CUSTODY RECORD

DATE	NAME OF SAMPLER(S):	REMARKS

ITEM NUMBER	SAMPLE NUMBER	SAMPLE LOCATION	TIME AND TYPE OF SAMPLE (All samples are water samples unless otherwise noted)				TYPE AND NUMBER OF CONTAINERS				LAB DESTINATION	COMMENTS AND SPECIAL REQUESTS
			COMPOSITED		GRAB	OTHER	1 GAL P	1 QT P	1 QT G	OTHER		
			FROM	TO								
1												
2												
3												
4												
5												
6												
7												
8												
9												
10												
11												
12												
13												
14												

RELINQUISHED BY	BADGE NO.	ITEM NUMBERS	TIME	DATE	RECEIVED BY	BADGE NO.

NO.	DISTRIBUTION OF COPIES
1	White - ALOA - Extension 6548
2	Pink - Receiver #3

000059

999

FMPC

REPORT OF CHEMICAL ANALYSES

(NOTE: Write Firmly — Part 4 must be legible.)

FMPC-T-200 (REV. 5/8/86)

Lab. Nos. _____

Lot No. _____

Analyses Requested _____

MATERIAL

ACCOUNT NO.:

DATE SAMPLED.

TED BY:

REMARKS:

LAB. NO.	IDENTIFICATION	ANALYTICAL DATA					

NO	DISTRIBUTION OF COPIES
1	Originator
2	Extra Copy
3	Quality Assurance
4	Analytical *(RECORD COPY)*

Approved By _____ Date of Report _____

FIGURE B-2

FMPC

TYPE OF MATERIAL			P.O. NO./ENRICHMENT
TYPE OF SAMPLE			
LOT NUMBER OR IDENT.			
DATE:	TIME:	NET WT.:	

FMPC-PRO-306 (REV 2/8/88)

FIGURE B-3

6.0 WASTE MANAGEMENT

Waste material generated by the sampling activities will be disposed of according to the existing FMPC procedures. This waste may include, but is not limited to, plastic ground cloths, disposable protective clothing, retrieval lines, disposable toweling, and plastic tubing.

All FMPC wastes with a hazardous component or characteristic, with the exception of those originating in the on-site laboratory, have been handled as mixed low level wastes. Determination of the radionuclide component of most material on site is based upon analysis to assay the uranium content potentially recoverable from the material. For some materials, assay values are assigned based on prior sampling of the same or similar materials or upon process knowledge. In cases where assay values have not been established, FMPC considers materials generated in the uranium processing area as radioactively contaminated. This determination is based upon process knowledge, experience in uranium production operations, and the fact that de minimis concentrations or below-regulatory-concern levels for radionuclides have not been established for the residues/wastes in question.

Recognizing the dual nature of these wastes, the FMPC stores mixed hazardous/ radioactive wastes in accordance with RCRA regulations as well as DOE orders concerning low level radioactive waste. These materials are stored pending the availability of acceptable treatment/disposal facilities for mixed waste.

DOE will provide Ohio EPA with the results of the radiological monitoring that will be conducted during the closure activities. The radiological monitoring conducted during the closure will be performed in accordance with the existing FMPC Standard Operating Procedures which are used on all projects at the FMPC. The results of the radiological monitoring will be provided to the Ohio EPA for informational purposes only.

6.1 RCRA Determination Criteria For Closure Waste

All wastes generated during RCRA Closure actions will be characterized in accordance with the FMPC Waste Analysis and Waste Determination Plans. Those waste waters found to be non-hazardous will be treated in the FMPC waste water treatment system. Final disposition of all waste generated during closure will be consistent with the waste characterizations and determinations.

7.0 SAMPLING EQUIPMENT

The following equipment may be required. Quantities required will be determined by the sampling coordinator based on preliminary inspection of hazardous waste management unit being closed:

- Bailers
- Coliwasa samplers
- Weighted bottle samplers
- Plastic ground cloths
- Retrieval lines
- Detergent
- Funnel (stainless steel, glass)
- Long-handled scraper (stainless steel, glass)
- Spatula (stainless steel, glass)
- Sample bottles for liquid and solid samples
- Portable pump
- Tygon tubing
- Deionized water
- Sample label
- Peristaltic pump

This is not intended to be a comprehensive list and may be added to or deleted from as judged appropriate by the sampling coordinator.

8.0 REPORT OF FINDINGS

A report of findings, including the laboratory analysis data and assessment of contamination levels, will be prepared by FMPC. This report will include the following information:

* The total number of samples taken
* The location of each sample taken
* The date and time each sample was obtained
* The type of analysis performed on each sample
* The concentration of each metal and organic in each sample

9.0 HEALTH AND SAFETY

Selection of the protective equipment for closure activities will depend on information supplied by FMPC on-site evaluation and assessment of risk. In addition, radioactivity levels measured by FMPC will be used to determine if the samples can be analyzed by the contract laboratory.

Additional screening may be required before shipment to the laboratory to further categorize the samples according to the level of radiation hazard. Radiation survey procedures and limits on samples prior to shipment will be in accordance with FMPC procedures.

A Task/Project specific Health and Safety plan, pursuant to requirements in the current FMPC Site Health and Safety Plan, will be required before RCRA Closure activities are initiated. The specific procedures, including personnel and equipment decontamination procedures, will be based on the required health and safety hazard analysis which will characterize hazards and conditions applicable at the time. A copy of the guidelines for the preparation of a Task/Project Specific Health and Safety Plan is included in Appendix C for information only.

10.0 DECONTAMINATION PROCEDURES FOR SAMPLING EQUIPMENT

10.1 General Information

All equipment used during the effort will be properly decontaminated, reducing the possibility of cross contamination from other RCRA units. Once sampling has begun, all equipment used during the sampling will be decontaminated after each sample collection effort. Enough additional equipment will be available to continue sampling while decontamination is being performed on the used sample equipment. After sampling has been completed at each sampling location, all sampling equipment will also be properly decontaminated, reducing the chance of cross contamination and contact contamination by the sampling equipment outside the RCRA unit.

Any equipment utilized during this sampling activity shall be washed to remove waste residues. The residues shall be managed as hazardous waste, containerized and stored at an approved RCRA storage unit at the FMPC, pending RCRA waste characterizations and determinations. Also any vehicles utilized for this sampling activity shall be managed in such a way as to not distribute waste residues on their tires outside of the RCRA unit area.

Prior to beginning the decontamination procedures, all personnel involved with sampling will inspect their clothing. Clean or new disposable coveralls will be used when clothing has visible soil/mud stains. Clean chemically resistant gloves will be worn during the entire decontamination process and during the handling of any equipment. During the final rinsing of the equipment, a new pair of chemically resistant gloves will be used to reduce the potential for cross contamination between the dirty wash area and the clean rinse area.

10.2 Equipment Decontamination Procedures

The decontamination station shall consist of two stages: a dirty side stage (stations 1-3); and a clean side stage (stations 4-6), each having three established stations of decontamination.

The dirty or contaminated stage decontamination shall consist of three stations set up on clean plastic sheeting. Stainless steel buckets representing station #1, (dirty side-first wash), station #2, (dirty side-second wash) and station #3, (dirty side-rinse), shall be spaced approximately 3 feet apart on the clean plastic sheeting provided. Clean chemically resistant gloves dedicated to the dirty or contaminated stage decontamination shall also be provided at station #1.

Each stainless steel bucket shall be filled half way using deionized water. Cleaning solution and dedicated brushes shall be added to the stainless steel buckets containing deionized water at stations #1 and #2.

A lined 55-gallon drum shall be provided and located approximately 5 feet from station #3. All items used at the dirty or contaminated stage decontamination shall be collected here.

The first station designated as the first dirty side wash station, shall consist of a stainless steel bucket containing deionized water and detergent cleaning solution, a dedicated brush, and a sprayer containing deionized water. The technician wearing dedicated dirty stage chemically resistant gloves shall thoroughly scrub all equipment at this station to remove any residual material that has not been previously removed from the sampling equipment prior to decontamination. After cleaning, a thorough visual inspection of said equipment shall be performed. If residual material is still present, the above procedure shall be repeated. When all visible material has been removed, the technician shall raise the equipment slightly above the level of water in the stainless steel bucket provided and spray rinse. All rinseate at this point shall be collected in the stainless steel bucket designated as station #1. The sampling equipment shall then be hand carried to station #2.

The second station designated as the second dirty side wash station, shall consist of a stainless steel bucket containing deionized water and detergent cleaning solution, a dedicated brush, and a sprayer containing deionized water. The technician wearing dedicated dirty stage chemically resistant gloves shall again thoroughly scrub all equipment at this point. As cleaning is completed, the technician shall raise the equipment slightly above the level of water in the stainless steel bucket provided and spray rinse. All rinseate at this station shall be collected in the stainless steel bucket provided at this location. The sampling equipment shall then be hand carried to station #3.

The third station is dedicated as the dirty side rinse, and shall consist of a stainless steel bucket filled half way with deionized water and a sprayer also containing deionized water. At this location, the technician wearing dedicated dirty stage chemically resistant gloves shall insert the equipment into the stainless steel bucket containing deionized water and rinse. As rinsing is completed, the technician shall raise the equipment slightly above the level of water in the stainless steel bucket provided and spray rinse with a sprayer also containing deionized water. All rinseate at this station shall be collected in the stainless steel bucket provided at this location.

When sampling equipment has been through all three stations of the dirty side decontamination, the equipment shall be placed on clean plastic sheeting located approximately 3 feet from point #3, and allowed to air dry. All designated dirty side material shall be discarded and placed in a lined 55-gallon drum located approximately 5 feet from station #3. The technician wearing clean stage chemically resistant gloves shall hand carry sampling equipment to station #4 (clean side).

The clean side stage shall also consist of three stations and the following equipment is required: three stainless steel buckets placed approximately 3 feet apart on clean plastic sheeting, dedicated brushes, sprayers, deionized water, detergent cleaning solution, a lined 55-gallon drum and designated clean side chemically resistant gloves.

The fourth station shall be designated as the clean stage first wash, and shall consist of a station that contains a stainless steel bucket located approximately

3 feet from the dirty side 55-gallon drum designated as dirty side general trash. The stainless steel bucket located at this station shall be filled halfway with deionized water, detergent cleaning solution, and a dedicated brush. A sprayer containing deionized water shall also be provided. The technician wearing dedicated clean stage chemically resistant gloves shall again thoroughly scrub all equipment. As cleaning is completed, the technician will raise the equipment slightly above the level of water in the stainless steel bucket provided and spray rinse. All rinseate at this station shall be collected in a bucket. Sampling equipment shall be hand carried to station #5.

The fifth station shall be designated as a clean stage rinse and shall consist of a station that contains a stainless steel bucket located approximately 3 feet from the fourth station. This stainless steel bucket shall be filled halfway with deionized water. A sprayer containing deionized water shall also be provided. The technician wearing dedicated clean stage chemically resistant gloves shall insert the equipment into the stainless steel bucket containing deionized water and rinse. As rinsing is completed, the technician shall raise the equipment slightly above the level of water in the stainless steel bucket provided and spray rinse with a sprayer also containing deionized water. All rinseate at this location shall be collected in the bucket provided. Sampling equipment shall be hand carried to station #6.

The sixth station shall be designated as the clean stage final rinse and shall consist of a station that contains a stainless steel bucket located approximately 3 feet from the fifth station. The stainless steel bucket shall be filled halfway with deionized water. A sprayer containing deionized water shall also be provided. The technician wearing dedicated clean stage chemically resistant gloves shall insert the equipment into the stainless steel bucket containing deionized water and rinse. As rinsing is completed, the technician shall raise the equipment slightly above the level of water in the stainless steel bucket provided and spray rinse with a sprayer also containing deionized water. All rinseate at this point shall be collected in the stainless steel bucket provided at this station.

After decontamination, all equipment shall be wrapped in clean plastic and stored in the appropriate storage containers until needed.

At the end of each day a sample of the rinseate collected in the bucket at station 6 shall be taken. This sample shall be put into a 16 oz. sample container and processed in the same manner as the background soil samples. These analytical results shall verify that proper decontamination is being achieved.

10.3 Collection and Handling of Equipment Rinseate

All liquids and solids produced as a result of decontaminating sampling equipment will be collected at the unit, placed in properly labeled 55 gallon drums, and stored in an approved RCRA storage unit at FMPC, pending RCRA characterization and determinations.

Revision 2: January 1991

TABLE B-1

SELECTED VOLATILE AND SEMI-VOLATILE ORGANIC COMPOUNDS FOR SOIL SAMPLE ANALYSES

Compound	CAS No.	SW-846 Analytical Method	Practical Quantitation Limits [1] Water ug/l	Practical Quantitation Limits [1] Soil/Solid ug/kg
Benzene [2]	71-43-2	8240	5	5
Carbon tetrachloride [2]	53-23-5	8240	5	5
Chlorinated Fluorocarbons	general class	8240 [3]	NA	NA
Chlorobenzene [2]	108-90-7	8240	5	5
Chloroform [2]	67-66-3	8240	5	5
Chloromethane	74-87-3	8240	10	10
Cresol (total) [2]	multiple isomers	8270	10	660
1,2-Dichlorobenzene	95-50-1	8270	10	660
1,4-Dichlorobenzene [2]	106-46-7	8270	10	660
1,1-Dichloroethane	75-34-3	8240	5	5
1,2-Dichloroethane [2]	107-06-2	8240	5	5
1,1-Dichloroethylene [2]	75-35-4	8240	5	5
2,4-Dinitrotoluene [2]	121-14-2	8270	10	660
Hexachlorobenzene [2]	118-74-1	8270	10	660
Hexachloro-1,3-butadiene [2]	87-68-3	8270	10	660
Hexachloroethane [2]	67-72-1	8270	10	660
Methyl ethyl ketone [2]	78-93-3	8240	100	100
Methylene chloride	75-09-2	8240	5	5
Nitrobenzene [2]	98-95-3	8270	10	66
Pentachlorophenol [2]	87-86-5	8270	50	3300
Pyridine [2]	110-86-1	8270	10 [4]	10 [4]
Tetrachloroethylene [2]	127-18-4	8240	5	5
1,1,1-Trichloroethane	71-55-6	8240	5	5
1,1,2-Trichloroethane	79-00-5	8240	5	5
Trichloroethylene [2]	79-01-6	8240	5	5
1,1,2-Trichloro-1,2,2-trifluoroethane	76-13-1	8240 [3]	N/A	N/A
Trichlorofluoromethane	75-69-4	8240	5	10
Vinyl chloride [2]	75-01-4	8240	10	10

1 Quantification limits depend on both matrix and interfering compounds.

2 TCLP listed organic compounds.

3 Although not listed as analytes in the 846 Method, a computer search of GC/MS data reference file can be used to identify/detect other volatile organic compounds.

4 No established SW-846 Quantitation Limit. Values are estimated based on Sensitivity of method for similar volatile and semi-volatile compounds.

TABLE B-2

TCLP METALS CONCENTRATIONS [1] AND TOTAL METALS ANALYSES

Metal	TCLP[2] Maximum Concentration (mg/l)	Total Metal [3] Action Level Concentration (mg/g)	SW-846 Analytical Method	Holding Time
Arsenic	5.0	0.1	6010	6 months
Barium	100.0	2.0	6010	6 months
Cadmium	1.0	0.02	6010	6 months
Chromium	5.0	0.1	6010	6 months
Lead	5.0	0.1	6010	6 months
Mercury	0.2	0.004	7470	28 days
Selenium	1.0	0.02	6010	6 months
Silver	5.0	0.1	6010	6 months

1 From OAC 3745-51-24 (40 CFR 261.24). TCLP listed organic compounds of concern are included in Table B-2. Holding time for organic samples is limited to 14 days before extraction and an additional 14 day after extraction to analyses.

2 TCLP, SW-846 Method 1311 (as defined in 40 CFR 261 Appendix II).

3 A solid sample subject to TCLP extraction procedures yields an extract that represents a 20 to 1 dilution of the original concentration. Therefore, a solid sample with a total concentration less than 20 times the TCLP limit could not exceed the TCLP limit. As a result, soils with a contamination less than 20 times the TCLP for a non-volatile compound can be characterized as non-hazardous as defined by RCRA TCLP without performing a TCLP Method 1311 extraction and analysis.

Revision 2: January 1991

APPENDIX C: Guidelines for the Preparation of FMPC Project/Task Specific Health and Safety Plan, June 1990

APPENDIX C

GUIDELINES FOR THE PREPARATION OF FMPC
PROJECT/TASK SPECIFIC HEALTH AND SAFETY PLANS
(APPENDIX II OF THE FMPC SITE HEALTH AND SAFETY
PLAN, JUNE 1990)

GUIDELINES FOR THE PREPARATION OF FMPC
PROJECT/TASK SPECIFIC HEALTH & SAFETY PLAN

PROJECT/TASK TITLE: _____

PREPARED BY: _____

DATE: _____

REVIEWED BY:

Centralized Training: _____

Radiological Safety: _____

Industrial Hygiene and Safety: _____

NOTE: This plan and associated permits shall be reviewed with each worker and be posted at the work site at all time. Review all of the listed sections is required prior to work start.

INTRODUCTION

A project/task specific health and safety plan is a complimentary program element that aids in the elimination or effective control of anticipated safety and health hazards. The project/task health and safety plan shall include all the basic requirements of the overall health and safety plan, but with close attention given to those characteristics unique to the particular project, task or job. For example, the project/task plan may outline the method of doing work in a confined space area, hazardous waste area, area containing hazardous materials or any area where there is the potential for exposure to employees.

Much of the information required to complete the plan may be provided on FMPC Work Permit Form No. 2939. However, the plan will allow for a complete job evaluation, health evaluation of the employee(s) performing the work and assure that personnel health and safety concerns are addressed prior to the start of the job/task.

The project/task health and safety plan must identify the hazards of each phase of the specific project/task/job and must be kept at the work site. All required permits shall be posted in the immediate work area. A job briefing shall be conducted prior to job start up and at any other time as deemed necessary to ensure that employees are aware of the project/task/job health and safety plan and its implementation. The supervisor in charge and Industrial, Radiological Safety and Training representatives shall perform periodic inspections of the job area to ensure that all known deficiencies are corrected prior to work start and during work performance.
NOTE: Examples are provided after each section, they are not meant to be realistic.

SECTION NO.	TITLE
1	History & Description of Building, Equipment, Area
2	Work Area Description Organization and Control
3	Job Activities/Work Plan
4	Hazard Risk Assessments
5	Standard Operating Procedures
6	Education and Training
7	Medical Surveillance
8	Monitoring
9	Levels of Protection
10	Safety Equipment List
11	Decontamination
12	Emergency Plan
13	Amendments

TASK SPECIFIC HEALTH & SAFETY QUESTIONNAIRE

SECTION NO. 1 History and Description of Building, Equipment, Area

This section in its entirety address all known facts about the area where work will be performed. When completed, this section combined with job activities/work plan, should create an understanding of potential health and safety issues to be addressed at the work area.

A. Description of Building, Equipment, Area

Pertinent information about the building, equipment or area such as current disposition, name, manufacturers, location of work area, building construction, etc.

EXAMPLE: *This is a 1000 gallon fiberglass tank buried approximately three (3) feet beneath the blacktop east of Building 46. The tank currently contains an unknown amount of methyl ethyl something. The tank was constructed in 1978 by Round Up Manufacturers and installed at the FMPC in January 1979. It has been in continuous use since that time and will be taken out of service 10 days before this project starts.*

B. Process Performed or Activities Conducted in the Area

Describe activities performed in the building, use of the equipment, types of material processed, etc.

EXAMPLE: *Building 46 is a vehicle and maintenance supply storage facility. The north bay of this three bay building houses emergency vehicles. No radioactive or hazardous substances have been processed in this building or area.*

C. Unusual Features

Include information pertaining to conditions which may present a hazard to personnel such as powerlines, material storage, equipment location, buried lines/pipes, etc.

EXAMPLE: *There is a drainage ditch approximately 50 feet east of the proposed work site. The flow in the drainage ditch is not controlled.*

An underground high voltage line is believed to be located in this area connecting the electric substation with Building 46.

SECTION NO. 2 Work Area Organization and Site Access Control

This section clearly identifies the designated work area, control zones or restricted areas where work will be performed; name(s) of supervisor personnel; name(s) of personnel performing work/activities; names of support personnel required to complete task. Site entry and exiting protocol should also be identified.

EXAMPLE: *An exclusion zone will be established around the proposed tank excavation area. This area measures approximately 25' x 25'. The exclusion zone shall be marked with barrier tape.*

Jo Smyth, Badge No. 0000, will be the supervisor in charge of this project. Tiny Tim, Badge No. 0000, Chicken Little, Badge No. 000 and Hairy Wolf, Badge No. 0000, will perform the tank sampling, excavation and removal activities.

Entry into the exclusion zone will be limited to the above listed individuals, Industrial Hygiene and Radiological Safety Technicians, Safety and Fire Inspectors and Utility Engineers. Anyone else desiring entry must first be approved by the supervisor in charge.

Personnel existing the area must be monitored to assure they are free of contaminates.

SECTION NO. 3 Task Activities/Work Plan

State task activity that will be performed and anticipated work plan.

EXAMPLE: *The contents of the tank must be sampled, the blacktop and aggregate fill on top and around the tank will be removed and boxed for shipment, all piping will be disconnected and removed, the tank will be removed and the excavation filled with new aggregate materials.*

SECTION NO. 4 Hazard Assessments

General categories of hazards that may be present at the work site should be listed. MSDSs must be included for any identified hazardous substance. It is prudent to assume that any identified hazard is present until a characterization has proven otherwise. Provisions should be made to properly protect all individuals that have the potential for exposure from the suspected or identified hazardous substances. Specific WMCO work permits may be required and should be prepared in accordance with Site Procedure 516.

DISCUSSION: *List each suspected or identified hazardous substance, condition or waste. Attach a copy of the applicable MSDS to the Health and Safety Plan. When*

identified, the appropriate permit should be completed and a copy attached to the Project/Task Specific Health and Safety Plan.

SECTION NO. 5 Standard Operating Procedures (SOP's)

Some project/tasks will require that special SOPs be prepared or existing issued procedures be referenced to conduct the work according to specified guidelines.

DISCUSSION: *If no procedure exists to cover the proposed work, prepare one to address the project/task. If procedures exist, list the applicable document number and full title.*

SECTION NO. 6 Education and Training

Employees shall not engage in field activities until they have been trained to a level commensurate with their job function, responsibilities and with the degree of anticipated hazards. The amount of training is based on worker categories.

A. Worker Category

1. general site worker - 40 hours of SARA/OSHA instruction plus 24 hours of field experience.

2. *occasional site worker* - 24 hours of SARA/OSHA instruction plus 8 hours of field experience.

3. workers regularly on site but not in danger of exposure - 24 hours of SARA/OSHA instruction plus 8 hours of field experience.

4. management or supervisory - Same as 1, 2 or 3 depending on category of work being supervised plus 8 hours of specialized training.

5. visitors - are not permitted within exclusion zones unless they have completed the training requirements specified in No. 1 through 4.

B. A safety meeting is required for all employees involved in hazardous material/waste operations. These meetings shall be held prior to task start, daily during work periods, when there is a change in work activities or implementation of safety plan amendments. Meetings shall be documented and will become a permanent element of this task specific health and safety plan. Subjects to be covered shall include:

- o work operations
- o personal protective equipment
- o air monitoring data
- o hazard communication
- o hearing conservation
- o monitoring results

- o decontamination procedures
- o task organization
- o physical stress
- o emergency procedures
- o communications
- o general safety
- o housekeeping

A detailed listing of subjects can be found in the site Health and Safety Plan Appendix II.

SECTION NO. 7 Medical Surveillance (To be completed by Medical Services)

Worker selection is based on an evaluation by a qualified licenced physician having knowledge of the specified tasks to be performed and the exposure potential as it relates to the worker. FMPC form HR 3162 is used for this purpose.

SECTION NO. 8 Monitoring (To be completed by IRS&T)

A. State the monitoring protocol and action levels for the contaminants involved in each work activity.

B. State each type of instrument to be utilized and coordinate with the type of contaminate to be monitored.

SECTION NO. 9 Personal Protective Equipment Requirements

State the required level of protection for each activity, task or hazardous substance as identified in the hazard assessment.

SECTION NO. 10 Safety Equipment List

State each piece of safety equipment and the protocol for utilization. This section should create the "shopping list" of safety supplies or equipment available for use be workers.

Examples: *Personal Protective Equipment (PPE), Fire Extinguishment, Decontaminating Materials, Communication Devices, Barrier Tape, Etc.*

SECTION NO. 11 Decontamination Procedures

Address decontamination of personnel and each piece of equipment as a step by step procedure for both chemical and radiological contaminants.

Include level of protection to be utilized during decontamination process, solutions, stations and dispensation of fluids, disposables and other waste.

SECTION NO. 12 Emergency Plans

Emergency plans shall include methods of reporting emergencies or abnormal conditions; evacuation procedures; accountability; types of alarms, etc.

SECTION NO. 13 Amendments

Statements shall be made as follows:

A. This Project/Task Specific Health and Safety Plan is based on information available at the time of preparation. Unexpected conditions may arise which require reassessment of safety procedures. It is important that personnel protective measures be thoroughly assessed by the supervisor in charge and IRS&T representative prior to and during the planned task activities. Unplanned activities and/or changes in the hazard status shall require a review of and may require changes in this plan.

B. Changes in the anticipated hazard status or unplanned activities are to be submitted as an amendment to this Project/Task Specific Health and Safety Plan.

C. Amendments must be approved by the plan author and IRS&T prior to implementation of the amendment.