U-006-301.10

1996

RI/FS WORK PLAN ADDENDUM: K-65 SILO SUBSOILS SAMPLING AND ANALYSIS PLAN NOVEMBER 13, 1990

11-13-90

14
REPORT

1996

REMEDIAL INVESTIGATION AND FEASIBILITY STUDY
FEED MATERIALS PRODUCTION CENTER
FERNALD, OHIO

RI/FS WORK PLAN ADDENDUM:

K-65 SILO SUBSOILS
SAMPLING AND ANALYSIS PLAN

NOVEMBER 13, 1990

TABLE OF CONTENTS

Section		Page
1.0	Introduction	1
1.1	Emergency Procedures	2
1.2	Drilling and Sampling Procedures	2
	1.2.1 Drilling Procedures -- Five Low-Angle Borings	2
	1.2.2 Sampling Procedures -- Five Low-Angle Borings	3
1.3	Radiological and Chemical Analyses	4
1.4	Geotechnical Analyses	5
1.5	Duration, Five Low-Angle Borings	5

FIGURES

Figure 1 -- Boring Angle Calculation Parameters	6
Figure 2 -- Adjustable Slope Indicator	7
Figure 3 -- Bearing Head Sampler	8
Figure 4 -- Boring Layout/Scheduled Sampling Configuration	9

TABLES

Table 1 -- Preliminary Boring Lengths, Critical Elevations, and Minimum Number of Samples Per Boring	10
Table 2 -- K-65 Embankment and Subsoils Geotechnical, Chemical, and Radiological Test Schedule	11
Table 3 -- Geotechnical Properties	12

K-65 SILO SUBSOILS SAMPLING PLAN

1.0 Introduction

The soils below the K-65 silos, denoted subsoils, will be analyzed for geotechnical, chemical, and radiological parameters, based on the following historical information:

- The K-65 silo leakage history as documented in a memorandum from R.C. Heatherton, National Lead Company of Ohio (NLO), to Central Files, NLO, dated November 25, 1953, Subject: "K-65 Storage Tank No. 1."

- A preliminary radiological assessment indicates the possible presence of silo-derived radon daughter products, lead 210, polonium 210, and stable lead in the soils surrounding the K-65 silos.

- The existence of a buried underground decant tank, historically known as the upper sump, and associated piping system adjacent to and underneath the silos which was used to transport K-65 waste slurry and decanted silo liquids between the silos and the production plant.

The K-65 silo subsoils will be sampled and analyzed to determine and verify the extent of contamination in the soils surrounding the K-65 silos. Detailed drilling procedures presented in the following sections have been developed to insure that the integrity of the silos is maintained during the drilling and sampling operations as well as minimizing the potential for breaching the silos. This plan pertains only to samples to be collected from low-angle auger borings. Samples to be collected from the berms around the silos will be addressed in a separate plan.

Due to the unconventional nature of low-angle borings, and sensitivities concerning tracking of the boreholes, practice boring will be completed in an area away from the K-65 silos prior to the drilling under the silos. This will allow crews to become more familiar with drilling, borehole tracking and sampling phases of this project. This will in turn provide for a safer, more efficient operation under the less favorable conditions of working near the silos.

A site specific health and safety plan has been written and will be implemented to insure worker safety and satisfy applicable regulations. Ground stability has been assessed by previous drilling operations in the area and has proven not to be a concern in the areas where this drilling and sampling will occur.

1.1 EMERGENCY PROCEDURES

If an emergency situation arises during the course of this work, it will be handled as outlined in the WMCO K-65 Silo Numbers 1 and 2 Area Emergency Procedures (SOP 65-C-107 dated 3/1/90). If highly radioactive material is encountered, as defined in the safety plan, the boring will be immediately plugged as this will be an indication that the silo is leaking excessively.

1.2 DRILLING AND SAMPLING PROCEDURES

The following subsections describe the K-65 silo embankment and subsoils sampling effort.

1.2.1 Drilling Procedures -- Five Low-Angle Borings

The hollow stem auger technique will be used for the five low-angle borings. The augers will be 4.25 inch inside diameter by 7.25 inch outside diameter.

After the drill-rig is set-up and the exact initial boring point is established at each boring site, a licensed surveyor will calculate the required drilling angles needed to clear critical structures by at least three feet and have a minimum of three feet of till below the final sampling point. Table 1 lists the critical elevations for each boring. Figure 1 depicts parameters used in calculating boring angles and tentative minimum and maximum calculated drilling angles. If for any reason the angle cannot be maintained, within the specified window, the boring will be abandoned and plugged. Authorization to redrill any deviated borings will be obtained from DOE prior to any attempts at redrilling. An acceptable drilling angle is one that maintains the boring within the window defined in the first sentence of this paragraph. The specified drilling angle will be maintained by derrick adjustments through the rig's hydraulic system. The drilling angle will be checked utilizing two methods: at the surface, with an adjustable slope indicator as illustrated in Figure 2, and down-hole, with a directional survey instrument[1] or an

[1]Manufactured by Eastman Christensen, Widely used in the oil industry for tracking the course of a wellbore, accurate to within 1° per manufacturer.

inclinometer[2]. The frequency of these checks will be once every five feet as the borehole is advanced. After drilling and sampling is complete, the boring will be plugged with cement-bentonite grout utilizing the tremie line method. All cuttings will be drummed. All drums will be clearly labeled with location, depth interval, date, and drum contents. All drums will be staged pending RCRA and radiological characterization of the specified samples.

1.2.2 Sampling Procedures - Five Low-Angle Borings

Continuous, core type samples will be collected along the entire length of each of the five low-angle borings, with a non-rotating bearing head sampler assembly, which will allow for the collection of up to five feet of relatively undisturbed sample per sampling run. Figure 3 is general depiction of this type of sampling device. The sampler assembly will be lined with two, 30-inch tenite sleeves.

Figure 4 depicts the boring layout and scheduled sampling configuration. Additional samples may be submitted for analysis based on field screening. All samples will be screened for radioactivity and volatiles. Radiological screening of samples will be accomplished in the field with a pancake GM meter and an alpha detector. Alpha will be screened for at the open ends of each 30-inch tube. Beta and Gamma will be screened for at the ends of the tubes as well as along the length of the tubes. Additionally, prior to archiving or shipping the samples they will be screened for radioactivity with an ESP-1, Model 141, SPA-3, Sodium Iodine Scintillation Detector survey instrument as outlined in Section 6.0 of the RI/FS Quality Assurance Project Plan, Revision 3. Samples will be screened for volatiles with an Hnu photoionization detector. Field measurements for volatiles will be taken at both ends of each 30-inch tube. The use of an Hnu photoionization detector is specified in the RI/FS Work Plan, Volume I, Section 4, page 3 of 9. Samples displaying an elevated reading will be analyzed for the parameters corresponding to the elevated field reading. For example, if a sample displays elevated radiation levels, the

[2]Manufactured by Slope Indicator Company, developed to be utilized to measure settlement or heave in foundations and embankments. The technology is transferable and can be used to measure the angle of a boring, accurate to within $\pm$ 0.1 inch per 100 feet of casing.

sample will be submitted for full radiological analyses; if a sample displays an elevated Hnu reading, it will be analyzed for full HSL parameters. The scheduled samples will be taken in five-foot lengths which are centered on each of the designated sample point locations shown in Figure 4. The final sample interval at each boring will be the last five feet of the boring. Results of field screening will be used to determine which section of the 5 foot sample will be submitted for the specified analyses. If field monitoring does not indicate a preference, then the first 2.5 foot length of the 5 foot sample will be analyzed for chemical constituents; while the second 2.5 foot length will be analyzed for radiological constituents and geotechnical parameters. The balance of unused sample material will be sealed and archived. All boring logs, sample collection records, and analyses will be performed per the RI/FS Quality Assurance Project Plan requirements unless specifically altered by this addendum. Sample analyses are specified in Sections 1.3 and 1.4. They are summarized in Table 2.

Borings 1 through 3 will be initiated on the western side of the silos, as depicted in Figure 4. Borings 1 and 3 will be advanced below the silo foundations and provide seven and eight samples respectively. Boring 2 will be advanced below the abandoned decant tank and provide four samples. Boring 4 will be advanced from the southeast to the northwest below Silo 1, terminate 20 feet from the center, and provide four samples. Boring 5 will be advanced from the southeast to the northwest below Silo 2, terminate 20 feet from the center, and provide five samples. These borings will provide critical samples for evaluating the presence of contaminants in the soils underlying the silos, the decant tank, and associated piping.

Boring location 2 is located on the west side of the road on the top of the east bank of Paddys Run. The creek bed is approximately 23 feet west and 23 feet lower than the location of the drilling machine. Wells 1032 and 2032 have been drilled at this location and a sampling trench was excavated in the area with no problems of slope failure. All of these factors indicate that slope stability on the east bank of Paddys Run will not be a problem while drilling Boring 2.

1.3 RADIOLOGICAL AND CHEMICAL ANALYSES

Samples at the specified intervals will be analyzed for radiological and chemical constituents. The required radiological and chemical analyses are listed below:

- Full radiological analysis as defined in the "RI/FS, FMPC, Quality Assurance Project Plan," dated March 31, 1988, Section 4.0. 1996

- Pb-210 (sample concentrations of polonium 210 can also be determined from this analysis, because there had been sufficient storage time to allow the nuclides to reach secular equilibrium).

- Full HSL analysis as defined in the "RI/FS, FMPC, Quality Assurance Project Plan," dated March 31, 1988.

- TCLP Organics and Inorganics[3]

Sample preparation and analysis will be performed in accordance with the RI/FS FMPC Quality Assurance Project Plan, dated March 31, 1988.

1.4 GEOTECHNICAL ANALYSES

The physical properties of the embankment and subsoils will be used to determine the expected soils behavior during remedial alternative soil conditioning, such as grout injection, as well as general geological and descriptive geotechnical parameters. The analyses ASTM standards and procedures are identified in Table 3.

All sample analytical testing must be conducted as specified under the appropriate ASTM standards and laboratory procedures using qualified geotechnical technician(s) and properly calibrated apparatus which meet the intent of ASTM D3740-80. Documentation for the testing will conform to the standards set forth in the "RI/FS, FMPC Quality Assurance Project Plan," QAPP.

1.5 DURATION

Five Low-Angle Borings:

Training/Practice	= 10 days
Total Footage: 730 ft. @ 40 ft/day	= 18.25 days
Set-up, Plugging Boring, Rig Maintenance, Tear Down and Decontamination: @ 4 days/boring	= 20.0 days
Total Work Days to Complete Task	48.25

[3]If the HSL analyses show that inorganics are above regulatory concern, TCLP inorganics will be analyzed. 7

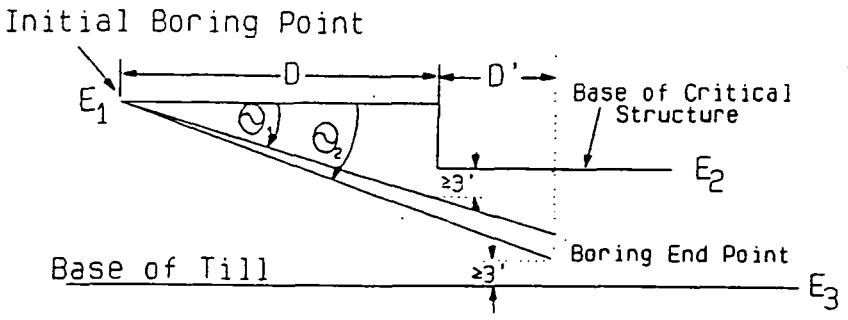

D = Distance to Critical Structure

L = Boring Length = D + D'

θ_1 = Minimum Drilling Angle

θ_2 = Maximum Drilling Angle

E_1 = Initial Boring Elevation

E_2 = Elevation of Base of Critical Structure

E_3 = Elevation of base of Till

$$\theta_1 = \text{Arctan}\ \frac{E_1 - E_2 + 3}{D}$$

$$\theta_2 = \text{Arctan}\ \frac{E_1 - E_3 - 3}{L}$$

Boring Number	E_1 - Initial Boring Point Elevation (ft.)	E_2 - Critical Structure Elevation (ft.)	E_3 - Base of Till Elevation (ft.)	D - Distance to Critical Structure (ft.)	L - Boring Length Horizontal (ft.)	θ_1 - Minimum Drilling Angle (Degrees)	θ_2 - Maximum Drilling Angle (Degrees)
1	578	572.62	546	85	145	5.63	11.31
2	573	560.75	547	125	145	7.29	9.01
3	577	572.62	546	90	170	4.69	9.35
4	576	572.62	546	95	115	3.84	13.21
5	579	571.1	546	85	155	7.31	10.95

FIGURE 1 BORING ANGLE CALCULATION PARAMETERS

FIGURE 2

ADJUSTABLE SLOPE INDICATOR

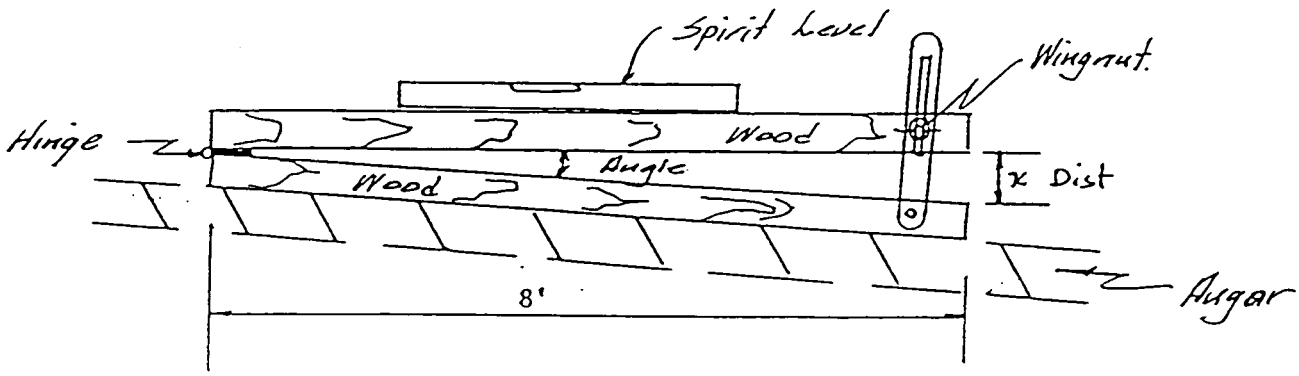

ANGLE	X DISTANCE
13°	1.85'
12°	1.70'
11°	1.56'
10°	1.41'
9°	1.27'
8°	1.12'
7°	0.98'
6°	0.84'
5°	0.70'
4°	0.56'
3°	0.42'
2°	0.28'
1°	0.14'

BEARING HEAD SAMPLER

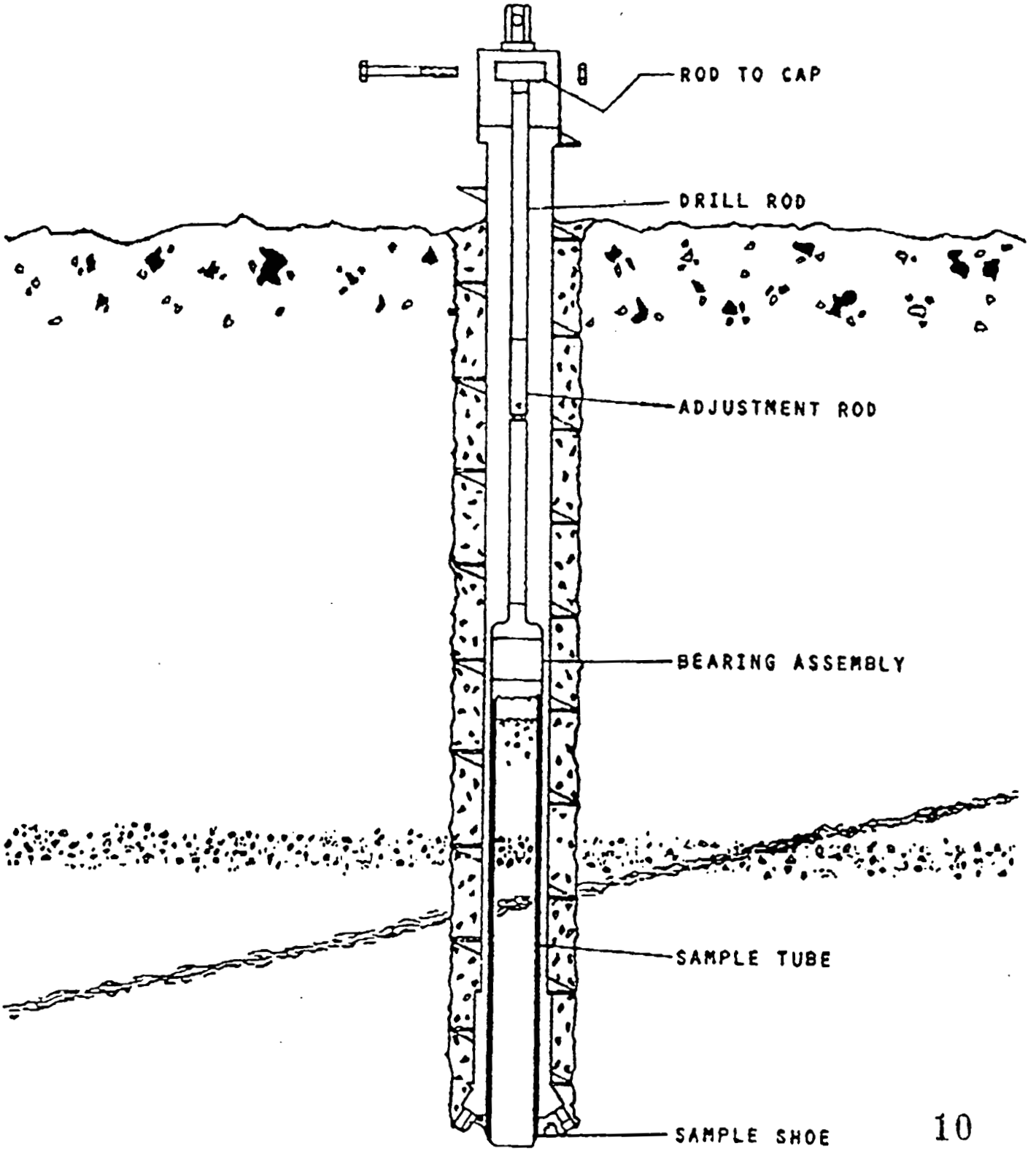

Figure 3

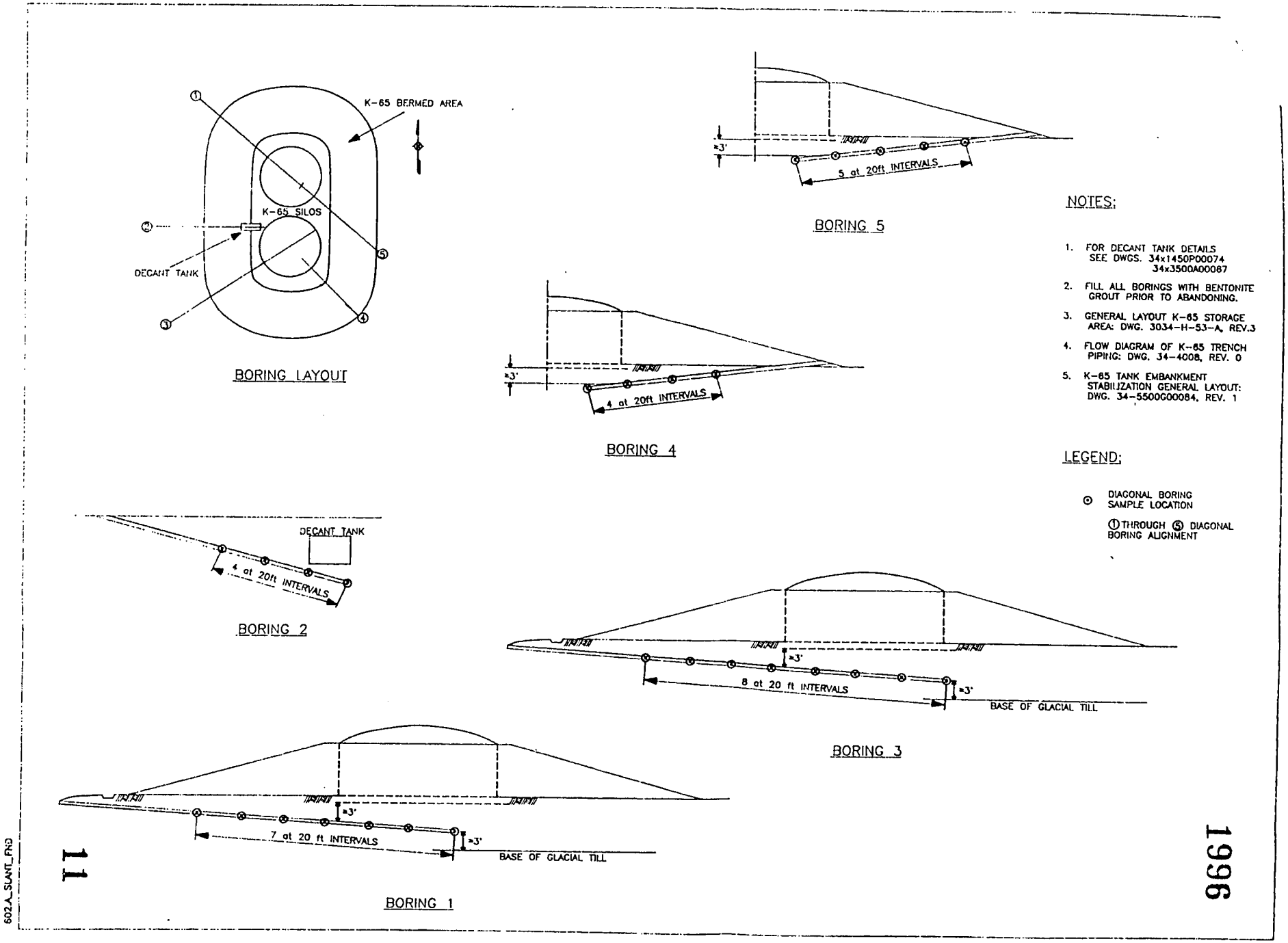

FIGURE 4. BORING LAYOUT AND SCHEDULED SAMPLING CONFIGURATION

Table 1. Preliminary Boring Lengths, Critical Elevations, and Minimum Number of Samples Per Boring

Boring No.	Critical Structure/ Elevation	Approximate Base of Till at Final Sampling Pt. Elevation	Approximate Initial Boring Point Elevation	Approx. Boring Length (ft)	Min. # of Samples to be Submitted for the Specified Analyses
1	Silo Footer/ 572.62	546	578	145	7
2	Base of Decant Tank/560.75	547	573	145	4
3	Silo Footer/ 572.62	546	577	170	8
4	Silo Footer/ 572.62	546	576	115	4
5	Concrete Trench/571.1 Silo Footer/572.62	546	579	155	5

Ref: Drawing-3034-H-56-A; Trench Piping Sections
Drawing-51T20-3; Two 125,000 cf Slurry Storage Tanks-Type K-65
Map-75x 5500 G 00114 0; Fernald Facility (Topography)
Map-Base of Till Elevation, Prepared for the Fernald RI/FS

WAH1406.kg3 12

1996

Table 2. K-65 Embankment and Subsoils
Geotechnical, Chemical, and Radiological Test Schedule

Test Type	Performed By	Minimum No. of Tests	Required Test Completion Date	Minimum Sample Size Per Test	Sample Location
Full radiological analysis per "RI/FS, FMPC, Work Plan," dated March 31, 1988	IT Corp	28	8 weeks after receipt of sample	1.1 kg per[b] Series	Per Fig. 4
P_b210		28			
Full HSL analysis per "RI/FS, FMPC, Work Plan," dated March 31, 1988	IT Corp	28	8 weeks after receipt of sample	1.3 kg per[b] Series	Per Fig. 4
TCLP Organics and Inorganics[c]		28			
ASTM D2216-80	GeoTechnical SubContractor[a]	28	8 weeks after receipt of samples	125 g	Per Fig. 4
ASTM D4318-84		28			
ASTM D854-83		28			
ASTM D422-63		28		4 kg	
ASTM D2487-85		28			

[a]Tests will be completed in laboratory setting and comply with the ASTM.
[b]Samples will be packaged and shipped in the appropriate containers as outlined in Revision 3 of the RI/FS Work Plan, Volume I: Sampling Plan and Volume V: Quality Assurance Project Plan.
[c]TCLP organics will be analyzed at the same frequency as the HSL analyses due to the short holding times for organics. TCLP inorganics will be analyzed when the HSL inorganics are found to be above regulatory limits.

Table 3. Geotechnical Properties

Method Title	Reference
Water Content Determination	ASTM D2216-80, "Laboratory Determination of Water (Moisture) Content of Soil, Rock, and Soil-Aggregate Mixtures," 1987 Annual Book of ASTM Standards Vol. 04.08 Soil and Rock; Building Stones; Geotextiles
Atterberg Limits	ASTM D4318-84, "Standard Test Methods for Liquid Limit, Plastic Limit, and Plastic Index of Soils," 1987 Annual Book of ASTM Standards Vol. 04.08 Soil and Rock; Building Stones; Geotextiles
Specific Gravity Determination	ASTM D854-83, "Standard Test Method for Specific Gravity of Soils," 1987 Annual Book of ASTM Standards Vol. 04.08 Soil and Rock; Building Stones; Geotextiles
Grain Size	ASTM D422-63, "Particle Size Analysis of Soils," 1987 Annual Book of ASTM Standards Vol. 04.08 Soil and Rock; Building Stones; Geotextiles
Soils Classification	ASTM D2487-85, "Standard Test Method for Classification of Soils for Engineering Purposes," 1987 Annual Book of ASTM Standards Vol. 04.08 Soil and Rock; Building Stones; Geotextiles