R-022-202.3

2344

DOCUMENTATION SUPPORTING FEMP SAFE SHUTDOWN REMOVAL ACTION NUMBER 12 PART TWO

10-29-1991

DOE-FSO/EPA
476
ENCLOSURE

[redacted] 2344

FEMP

DOCUMENTATION SUPPORTING
FERNALD ENVIRONMENTAL MANAGEMENT PROJECT
SAFE SHUTDOWN
REMOVAL ACTION NUMBER 12

PART TWO

SAFE SHUTDOWN REMOVAL ACTION NUMBER 12

INDEX

A. Program Overview

B. Enclosure - Part One

I. General Supporting Documentation

- IN-FMPC 6007, Site Document System
- SSOP-0023, Deviation and Corrective Action Reporting
- RM-FMPC-0002, Centralized Training Program Manual*
- FMPC-2139, FMPC Quality Assurance Plan*
- FMPC Site Health and Safety Plan*
- FMPC-2214, Environmental Restoration and Waste Management Site Specific Plan*
- Shutdown/Facility Acceptance and Criteria Plan
- SSOP-0002, Completing the Material Evaluation Form
- IN-6010, Material Disposition Order Management
- FMPC-503, FMPC Spill Incident Reporting and Cleanup
- PP-0125, Emergency Management

II. Implementing Procedures

Step 1. Preliminary Assessment of Process Facilities

- U.S. Department of Energy Order 5820.2A Radioactive Waste Management

Step 2. Characterize Process Equipment and Hold-Up Materials

- Amended Consent Decree
- SOP 1-C-101, Sampling Residual and Waste Materials

Step 3. Transfer Existing Inventories of Chemicals, Materials, and Uranium Materials from Process Buildings to Approved Storage Locations

- SOP PO-S-06-001, Movement of Hazardous Waste

INDEX

Step 3. Continued

- SOP 20-C-101, Moving and Storing Nuclear Materials On-Site at the FMPC
- SOP 20-C-904, General Nuclear Safety Requirements
- SOP 1-C-608, Storage of Radioactive Material
- SOP 20-C-604, Control and Utilization of Contaminated Trash Dumpsters
- SOP-2-C-923, Trash Baler Operation

Step 4. Energy Source Isolations, Lock & Tag-Out of Process Equipment

- SOP FMPC-0715, FMPC Work Request System
- SOP FMPC-0719, Energy Control (Lockout & Tag-Out)

Step 5. Prepare Safety Documentation

- SOP FMPC-508, Safety Analysis Documentation Program
- SOP FMPC-712, Vulnerability, Risk Assessment and Management

Step 6. Prepare NEPA Documentation

- SOP FMPC-518, Completion of National Environmental Policy Act (NEPA) Documentation

INDEX

C. Enclosure - Part Two

Step 7. Transfer of Substance from Process Equipment and Associated Support Systems

- SOP FMPC-505, Radiation Control
- SOP FMPC-515, Issuance and Implementation of Radiation Work Permits
- SOP FMPC-516, Control of Permits for Accomplishing Hazardous Work
- SOP FMPC-5010, Management of Low Level Waste (LLW)
- SOP 20-C-601, Packaging Low Level Radioactive Waste (LLRW) for Off-Site Disposal
- SOP 20-C-605, Establishment and Control of Satellite Accumulation Areas
- SOP 20-C-606, Hazardous Material Spill Clean-up
- SOP 20-C-700, Norclean Portable Vacuum Operation
- SOP 20-C-701, Operation of Spenser & Hoffman Portable Dust Collectors
- SOP 2-C-601, Refinery Sump
- SOP 8-C-116, Filtering Refinery Thickener Underflow
- SOP 8-C-115, Filtration of Uranium Bearing Slops
- SSOP-0008, Preparing and Transferring Uncharacterized Waste to the Controlled Holding Area
- SOP PO-D-023, Shift Orders
- SOP 1-C-903, Plant 1 Nuclear Materials Inventory
  2-C-904, Refinery Nuclear Materials Inventory
  4-C-903, Plant 4 Nuclear Materials Inventory
  5-C-911, Plant 5 Nuclear Materials Inventory
  6-C-902, Plant 6 Nuclear Materials Inventory
  8-C-504, Plant 8 Nuclear Materials Inventory
  9-C-903, Plant 9 Nuclear Materials Inventory
  11-C-215, Pilot Plant Nuclear Materials Inventory
  11-C-212, Isotopic Changeover Clean Up of the UF6/UF4 Facility
  20-C-709, Baghouse Type Dust Collector Filter Removal/Replacement

INDEX

Step 8. Control Loose Contamination

- Task Specific Health & Safety Plan for Decontamination of Various Areas of Existing Fixed or Removal Contamination, June 5, 1991

Step 9. Disposition of Surplus Property

- SOP SP-P-35-010, Unrestricted Release of Materials from FMPC
- FMPC-303, Management of Government Property

STEP 7

NON-CONTROLLED COPY

Westinghouse Materials Company of Ohio — FMPC	NUMBER: FMPC-505	REVISION: 0	ISSUE DATE: 12/02/88
	TITLE: RADIATION CONTROL		2344
SITE POLICY AND PROCEDURE	APPROVED BY: M. B. BOSWELL, PRESIDENT		

1.0 POLICY

The Westinghouse Materials Company of Ohio (WMCO) shall develop and implement protective controls, based on the requirements of the Department of Energy (DOE), for the handling and use of radioactive materials and equipment (including radiation sources) to keep radiation exposure and radioactive contamination as low as reasonably achievable.

2.0 SCOPE

This procedure identifies the safety requirements and assigns the responsibilities for the control of radioactive materials and personnel radiation exposure and contamination at the Feed Material Production Center (FMPC).

3.0 DEFINITIONS

3.1 Controlled Area - A defined area in which the occupational exposure of personnel to radiation or radioactive material is controlled.

3.2 Radiation - Energy emitted in the form of alpha, beta, gamma, neutron or X-rays during the process of radioactive decay of an unstable atom, or by the operation of a radiation generating device.

3.3 Radiation Worker - Any individual who in the course of his or her employment may receive 10% or more of the annual occupational radiation dose. Also any individual who works directly with radioactive material or radiation generating devices.

3.4 Radiation Source - Usually a manufactured, sealed source of radioactive material used in teletherapy, radiography, as in ionization source for smoke detectors or in various types of industrial gauges. Machines such as accelerators and radioisotope generators and naturally occurring radionuclides may also be considered sources.

3.5 Radiological Control Programs - Those programs that have been developed for the safe handling of radioactive material and control of personnel exposure to ionizing radiation.

3.6 Radioactive Contamination - A deposit of uncontained or unwanted radioactive material typically on the surface of structures, areas, objects or personnel. It may be carried in air or liquids.

6

FMPC-T-2657 (REV 5/19/87)

3.0 DEFINITIONS (Continued)

3.7 Radiation Work Permit - A permit to administratively control routine, non-routine or periodic routine tasks which involve the potential for significant radiation exposures.

3.8 Site Source Permit - A permit authorizing possession and use of a radiation source at the FMPC. The permit specifies the source to be used, the person who may use the source, and the conditions under which it may be used.

4.0 RESPONSIBILITIES

4.1 Staff Managers - Responsible for implementing the applicable sections of the Radiation Control Manual, FMPC-2084, in their department and for appointing a Department Source Custodian when required.

4.2 Department Source Custodians - Responsible for the receipt, leak test, inventory, and disposal of sources controlled by the department. Also acts as the liaison between the user(s), the Site Source Custodian, and the Radiological Safety Technicians.

4.3 Site Source Custodian - Responsible for maintaining inventory, receipt, leak test, and disposal records for all radiation sources at the FMPC.

4.4 Employees - Responsible for working in a safe manner and identifying potential hazards to supervision.

4.5 Supervisors - Shall investigate potential hazards and recommend appropriate remedial actions.

4.6 Operations Health and Safety - Reponsible for the maintenance of the Radiation Control Manual. Sets contamination standards for the FMPC.

5.0 GENERAL

5.1 The Radiation Control Manual defines the radiation control policies, responsibilities and protective measures used by WMCO in the operation of the Feed Materials Production Center (FMPC). Radiological controls are invoked in areas where radioactive materials are handled and in areas where potentially contaminated materials may be stored.

5.2 In emergencies where personnel health and safety are involved, life saving actions of personnel take precedence over the radiological controls specified in FMPC-2084.

6.0 PROCEDURE

Radiation control shall be accomplished in accordance with the requirements and instuctions contained in Topical Manual FMPC-2084, Radiation Control Manual.

7.0 APPLICABLE DOCUMENTS

DOE Order 5480.1B	Environmental Protection, Safety and Health Protection Program For DOE Operations
OR Order 5480.1A	Environmental Protection, Safety and Health Protection Program for Oak Ridge Operations
10 CFR 20	Standard Protection Against Radiation
10 CFR 71	Packaging and Transportation of Radioactive Material
49 CFR 100-199	Research and Special Programs Administration
FMPC-2084	Radiation Control Manual

8.0 FORMS USED

None

9.0 ATTACHMENTS

None

8

Westinghouse Materials Company of Ohio — FMPC

SITE POLICY AND PROCEDURE

NUMBER:	REVISION:	ISSUE DATE:
FMPC-515	0	5/22/87

TITLE: Issuance and Implementation of Radiation Work Permits

APPROVED BY: M. B. Boswell, President

1.0 POLICY

It is the policy of Westinghouse Materials Company of Ohio (WMCO) that all radiation exposures shall be maintained ALARA (as low as reasonably achievable) and kept within DOE 5480.1, Chapter 11 limits.

2.0 SCOPE

The scope of this procedure is to provide direction for administratively controlling exposure to personnel at the FMPC.

3.0 DEFINITIONS

3.1 Radioactive Materials - Materials made of unstable atoms which emit radiation in the form of alpha, beta, or gamma radiation.

3.2 High Radiation Areas - Areas in which beta/gamma external radiation exposure rates are in excess of 100 mrem/hour.

4.0 RESPONSIBILITIES

4.1 Environmental and Radiological Monitoring Technician (ERMT) - Completes the radiation survey, calculates the maximum time allowed by the work permit, fills out the work permit, issues and reads the pocket dosimeters if required. The ERMT shall then review daily results and convey a weekly report of pocket dosimeter results and/or time spent on the job to the Supervisor of Environmental and Radiological Monitoring, the Manager of Health Physics and the worker's supervisor.

4.2 Requesting Supervisor - Assures that all work in radioactive material areas is controlled as set forth in this procedure.

4.3 Employes - Confirm the availability of an approved work procedure (i.e., SOP) or a completed Radiation Work Permit (RWP) before beginning the work. Workers shall read the description of work on the RWP to understand prescribed requirements, and signify their understanding by signing the form and listing their badge number.

9

4.0 RESPONSIBILITIES (continued)

4.4 Environmental and Radiological Safety (E&RS) - Provides additional guidance (upon the ERMT Technicians request) of protective measures necessary to properly control an RWP job.

5.0 GENERAL

5.1 Exposure to radioactive material for which there is no approved work procedure shall be controlled by an RWP. In addition, when work performed under approved work procedures involves work in High Radiation Areas, areas where radiation fields are variable or unknown, or the work procedure requires that an RWP be obtained, an RWP shall be issued.

5.2 The primary purpose of the RWP is to control non-routine or periodic routine tasks that involve the potential for significant radiation exposures. The RWP identifies the work activity, the associated radiological conditions and protective measures required to accomplish the work.

5.3 The work permit shall remain in force for the duration of the job, not to exceed seven calendar days, as long as conditions remain the same, i.e., all materials, equipment, shielding and structures that were present when the survey was performed have not been adjusted or moved during the performance of work in such a way as to modify the conditions of the original permit.

5.4 When applicable (as directed by ERMT), the Requesting Supervisor shall notify an ERMT at the completion of the job so a post-work surface contamination survey can be performed.

5.5 When a post-work contamination survey is required, the work under the RWP shall not be considered complete until the work area surface contamination is less than 5,000 dpm/100 cm^2 removable alpha or 50,000 dpm/100 cm^2 removable beta/gamma radiation as verified by the ERMT.

6.0 PROCEDURES

6.1 Determining When an RWP is Needed.

RESPONSIBILITY	ACTION
REQUESTING SUPERVISOR	A. Determines if an approved procedure covers desired work involving radioactive material. An RWP shall be required under the following circumstances: o if a procedure does not exist; o if an approved procedure does exist, but the work is in a high radiation area or the radiation field is variable or unknown.

6.2 Preparation of the RWP.

REQUESTING SUPERVISOR	A. Describes the work to be performed on the RWP form, Attachment A, in sufficient detail to leave no question of what the work involves, and validates the description with his/her signature. B. Notifies ERMT of the work to be performed.

6.3 Preparing Area for Work.

ERMT	A. Properly completes the RWP according to ES&H procedure ESH-P-30-002 (Radiation Work Permits). Specifies protective equipment and shielding requirements. B. Informs the Supervisor of Environmental and Radiological Monitoring that an RWP has been issued in accordance with the applicable Health Physics Evaluation (See ESH-P-30-002 Section 6.9).
E&RS	C. Notifies the ERMT of any restrictions, anti-contamination clothing or apparatus required for the job.

6.0 PROCEDURES

6.3 Preparing Area for Work (continued)

RESPONSIBILITY	ACTION
ERMT	D. Signs the RWP to signify its completion.
	E. After all signatures are on the RWP form, gives the first copy to the Requesting Supervisor for posting at the work location and the second copy to the Environmental and Radiological Monitoring records.
REQUESTING SUPERVISOR	F. Posts the RWP in a conspicuous location at the job site and ensures that permit requirements are followed.
EMPLOYES	G. Read the RWP and complete Section IV in full to signify understanding of the RWP requirements.
	H. Perform the work in accordance with the provisions listed on the RWP.
REQUESTING SUPERVISOR	I. Notifies the ERMT, as specified on the RWP, when the job is complete so surface contamination clean up can be verified. See Section 5.5.
	J. Removes the RWP when the job is complete.
	K. Files the RWP for future reference.

7.0 APPLICABLE DOCUMENTS

DOE Order 5480.1, Chapter II - Requirements for Radiation Protection.

ESH-P-30-002, "Procedure for Filling Out Radiation Survey and Work Permit Form."

8.0 FORMS USED

FMPC-ES&H-1372 - Radiation Work Permit Form.

9.0 ATTACHMENTS

Attachment A - Radiation Work Permit Form - FMPC-ES&H-1372.

RADIATION WORK PERMIT

SECTION I: *TO BE COMPLETED BY THE JOB SUPERVISOR*

(1) JOB LOCATION: BUILDING	DATE	(2) ISSUE DATE:	(3) SHIFT:	(4) EXPIRATION DATE:*

JOB DESCRIPTION:

REQUESTING SUPERVISOR'S SIGNATURE:

* *Maximum 7 days from issuance*

SECTION II: *TO BE COMPLETED BY ERMT*

(5) RADIATION LOCATION	INSTRUMENT READING (6) OW OPEN WINDOW mRad/hr	(7) CW CLOSED WINDOW mRad/hr	EXTREMETIES (8) OPEN WINDOW mRad/hr
1.			
2.			
3.			
4.			

INSTRUMENT TYPE	SERIAL NUMBER	CALIBRATION DATE

(9) STAY TIME CALCULATIONS

CP BETA DOSE	SKIN DOSE	EXTREMITY
CORRECTION FACTOR (OW-CW)*F = mRem/hr		
	WHOLE BODY	TIME LIMIT
Side Window GM F = 8 mRem/hr		
CP Ion Chamber F = 3 mRem/hr		

(10) AMBIENT BACKGROUND β/γ mrem/hr

(11) RADIOLOGICAL SURVEY FORM ATTACHED ☐ YES ☐ NO

(12) SURVEY MAP ATTACHED ☐ YES ☐ NO

(13) MONITORING REQUIREMENTS

- ☐ At start of job
- ☐ Intermittent
- ☐ Continuous
- ☐ On completion of job
- ☐ Not required
- ☐ Personnel survey at completion
- ☐ Air monitoring

(14) DOSIMETRY REQUIREMENTS**

- ☐ Direct reading dosimeter
- ☐ Wrist dosimeter
- ☐ Ring dosimeter
- ☐ Other _____

** *TLD required for all radiation work*

(15) PROTECTIVE EQUIPMENT

WHOLE BODY
- ☐ None
- ☐ Cloth coveralls
- ☐ Disposable coveralls
- ☐ Lab coat
- ☐ Tape openings
- ☐ Other _____

BREATHING REQUIREMENTS
- ☐ Half face respirator
- ☐ Full face respirator
- ☐ Airline respirator
- ☐ Airline hood
- ☐ Combination canister
- ☐ SCBA
- ☐ Other _____

HEAD
- ☐ Safety glasses
- ☐ Goggles
- ☐ Face shield
- ☐ Cap
- ☐ Hood
- ☐ Hard hat

HANDS (GLOVES)
- ☐ Cotton
- ☐ Rubberized
- ☐ Surgical
- ☐ Gauntlet
- ☐ Other _____

SHIELDING
- ☐ Rubber Mat
- ☐ Aluminum
- ☐ Plywood
- ☐ Other _____

FEET AND LEGS
- ☐ Latex shoe covers
- ☐ Disposable shoe covers
- ☐ Safety shoes
- ☐ Safety boots
- ☐ Other _____

(16) SPECIAL HEALTH PHYSICS INSTRUCTIONS AND REQUIREMENTS

ERMT SIGNATURE: DATE: TIME ISSUED:

SECTION III: *APPROVAL SIGNATURES (as required)*

NO.	DISTRIBUTION OF COPIES
1	Posting
2	ERM Supervisor
3	Health Physics

SECTION IV: *TO BE COMPLETED BY EMPLOYES* ***

(17) NAME(S) OF EMPLOYE(S) (SIGNATURE)	(18) BADGE NUMBER	(19) RESPIRATOR FIT TEST	(20) RADIATION WORKER TRAINING
1.		☐ YES ☐ NO	☐ YES ☐ NO
2.		☐ YES ☐ NO	☐ YES ☐ NO
3.		☐ YES ☐ NO	☐ YES ☐ NO
4.		☐ YES ☐ NO	☐ YES ☐ NO
5.		☐ YES ☐ NO	☐ YES ☐ NO
6.		☐ YES ☐ NO	☐ YES ☐ NO

*** *Signature indicates employe has read this RWP.*

14

FMPC-ES&H-1372 (REV 5-18-87)

Westinghouse Materials Company of Ohio — FMPC	NUMBER: FMPC-516	REVISION: 2	ISSUE DATE: 04-23-91
SITE POLICY AND PROCEDURE	TITLE: CONTROL OF PERMITS FOR ACCOMPLISHING HAZARDOUS WORK		
	APPROVED BY: W. H. Britton, President		

1.0 POLICY

Westinghouse Materials Company of Ohio (WMCO) shall establish positive means for controlling work tasks that involve hazardous, or potentially hazardous substances, equipment, operations or activities to maintain employee health and safety and assure environmental compliance.

2.0 SCOPE

This procedure describes the responsibilities and requirements for control of work tasks by WMCO employees, subcontractor personnel, and/or others involved with any of the following activities: working with asbestos; working on a chemically hazardous system; open flame and/or welding activities; working with radioactive material; and entering or working in a confined space.

3.0 DEFINITIONS

3.1 FMPC Work Permit (Form) - A pre-numbered document used to identify job requirements and record management approvals and employee awareness is required before a work task which involves any of the following activities may begin; working on a chemically hazardous system; open flame and/or welding activities; or entering and/or working in a confined space (See Attachment A). When working with asbestos, an Asbestos Work Permit (See Attachment B) shall be attached to the Work Permit Form.

3.2 Lock and Tag - Personal protection by isolation is indicated by the placement of a lock and/or tag on an energy-isolating device ("i.e.", valves, dampers, flanges, breakers, disconnects) to indicate the device shall not be operated.

3.3 Working with Asbestos - Any work task involving the substance "asbestos" including but not limited to chrysotile, amosite, crocidolite, tremolite, anthophylite, actinolite, and asbestos in composite form such as transite and floor tile.

3.4 Working on a Chemically Hazardous System - Any work task that involves disassembly, equipment addition, part replacement, system modification, repair, and/or demolition of any equipment, pipeline, and/or system or facility that contains or did contain a chemically hazardous substance, i.e., a nonradioactive hazardous substance such as acids, caustics, corrosives, flammables, explosives, oxidizers or toxic materials.

3.0 DEFINITIONS (cont.)

3.5 Open Flame or Welding Activities - An activity located outside a designated welding area of a maintenance shop that uses an open flame for welding or causes an electric arc.

3.6 Confined Space - An enclosure or space which is not intended for continuous personnel occupancy, has limited openings for entry and exit, or has an unfavorable natural ventilation that contains or can produce dangerous air contamination. Confined spaces include but are not limited to storage tanks, process vessels, pits (four feet deep or more, that may contain potentially hazardous atmosphere, i .e., natural gas, sewer gas, etc.) or is a permanent structure (silos, vats, degreasers, reaction vessels, furnaces, boilers, ventilation and exhaust ducts, manholes, sewers, tunnels, underground utility vaults and pipelines). Entry into a confined space requires a Confined Space Entry Permit. Deviations from permit requirements shall be processed as stated in Section 5.2.

Confined spaces are categorized into three classes.

Class "A" Confined Space - A confined space that presents a situation that is immediately dangerous to life or health (IDLH), such as oxygen deficient, explosive, flammable atmospheres, and/or toxic substances at unacceptable concentrations.

Class "B" Confined Space - A confined space that has the potential for causing injury or illness if protective measures are not used, but is not an immediate danger to life and health.

Class "C" Confined Space - A confined space in which a potential hazard would not require any special modifications to the work routine.

3.7 Hazardous Atmosphere - An atmosphere which poses a threat to personnel. Examples of hazardous atmospheric conditions include oxygen deficient (less than 19.5% by volume) or oxygen enriched atmospheres (above 23.5% by volume), toxic (exceeds permissible exposure level), or explosive (measure greater than 10% of the lower explosive limit) conditions.

R 3.8 Asbestos Permit - A separate form which is appended to the Work
R Permit Form when a work task involves work with asbestos
R containing materials. The Asbestos Permit is issued by the
R Industrial Hygiene Technician. In construction activities this
R form is associated with an FMPC Work Permit.

3.9 Flame and Welding Permit - A section of the Work Permit Form used when a work task involves an open flame or welding activities outside a designated welding area of a maintenance shop.

3.10 Confined Space Entry Permit - A section of the Work Permit Form used when a work task involves the entry into a confined space.

3.0 DEFINITIONS (cont.)

R 3.11 Chemical/Hazardous Material Permit - A section of the Work Permit
R Form used when a work task involves or potentially involves
R working with chemically hazardous materials and/or chemically
R hazardous systems. This includes trenching, excavation and
R elevated work.

3.12 Standby Person - A person(s) who has received confined space aware- ness training from IRS&T (or IRS&T approved training program) and is assigned to remain immediately outside the entrance of the confined space to maintain direct communication with the personnel inside and contact rescue or other emergency assistance if necessary.

3.13 Fire Watch - The person assigned the responsibility to watch for fires in exposed areas during non-maintenance shop cutting and welding activities. This person sounds an alarm in the event of a fire then attempts to extinguish the fire when determined to be within the capacity of available fire-fighting equipment. This person shall be trained in the use of available fire-fighting equipment, have appropriate personal protective equipment and know the location of the nearest fire alarm box, telephone or radio.

3.14 Facility Owner - The designated management representative responsible for the area, equipment, or structure where the work task will be conducted. The designated alternate as identified by the Facility Owner will also be referred to as the Facility Owner in this procedure.

3.15 Supervisor-in-Charge - The supervisor responsible for the personnel who will perform work specified on the Work Permit Form. The Construction Subcontractor Supervisor who is responsible for contractor and subcontractor personnel performing the work shall also be referred to as the supervisor-in-charge. For this procedure, the area supervisor (who may also be the Facility Owner's Designated Alternate) is not to be considered as the supervisor-in charge.

3.16 Confined Space Entry - Any action resulting in any part of the employee's face breaking the plane of any opening of the confined space. This includes any ensuing work activities inside the confined work space.

3.0 DEFINITIONS (cont.)

R 3.17 Assistant Emergency Duty Officer (AEDO) - The AEDO is the on site management authority for all unplanned and unwanted events. This position is filled by a Utilities Engineer. The AEDO reports to and communicates with the Emergency Duty Officer (EDO). The AEDO has the authority to take all actions necessary to protect personnel and mitigate the event, including the authority to classify the event and to activate the FMPC offsite emergency warning system, the Emergency Response Team, the plant-wide alarm, the Emergency Operations Center, and the Joint Public Information Center, and to notify appropriate agencies. The AEDO is responsible for completion of an MER (Minor Event Report) or UOR (Unusual Occurance Report) since he is the one who classifies events and controls report numbers. The AEDO will notify other management as required by applicable emergency management procedures.

R 3.18 Project/Task Specific Health and Safety Plan - A supplemental document used to specifically address the Safety and Health hazards for a particular project or task being performed in conjunction with hazardous substances. This document identifies and contains the required permits necessary to ensure the safety of personnel performing the designated project or task.

R 3.19 OSHA 29 CFR 1910.120 - The federal rules and regulations that gives guidance on employee protection and safe operating requirements for Hazardous Waste Operations and Emergency Response.

R 3.20 Reportable Event - A non-routine event that, after evaluation must be reported to DOE because of applicable regulations or public/media concern.

R 3.21 Radiation Work Permit (RWP) - A separate form which is appended to the work permit form and issued for the performance of any task that involves exposure to radiation or radioactive material.

R 3.22 Operations Manager (or Task Leader) - The individual responsible for immediate notification of the AEDO on any unusual occurance (an unforeseen problem not specifically identified in the procedure or work plan) encountered during a task accomplishment.

4.0 RESPONSIBILITIES

4.1 Facility Owner - Identifies the general precautions to be taken and provides information pertaining to a chemical/hazardous material permit.

4.0 RESPONSIBILITY - (cont.)

R 4.2 Supervisor in Charge - Initiates the work permit and ensures that personnel are properly trained and adhere to all procedures and requirements that apply to the work they perform. Identifies the types of permits required and specifies the types of protection and protective equipment needed per IH&S guidance for a chemical/hazardous material permit. (Note: WMCO Project Manager/Project Engineer or Construction Coordinator may also initiate a work permit.) The Supervisor-in-Charge immediately reports any unwanted, unplanned event to the AEDO through the Communications Center Officer, or directly to the AEDO by radio or telephone. The Area Supervisor investigates and performs a preliminary evaluation of the magnitude and nature of the incident, isolates and secures affected areas, and initiates corrective or response actions if possible under safe conditions, until the AEDO responds to the scene.

R 4.3 Industrial, Radiological Safety and Training (IRS&T) Department - Develops, implements, and administers employee training programs to ensure full understanding and use of the Work Permit Program; updates the Work Permit Procedures; verifies the protective equipment needed; and documents the training was completed; and reviews or verifies the methods and equipment used to achieve an effective and comprehensive hazard assessment of work tasks performed; and monitor work being performed.

R 4.4 Industrial Hygiene and Safety (IH&S) Representative - Issues asbestos work permits, confined space entry permits and open flame and welding permits and signs Sections F and G of the work permit. Observes day-to-day operations for compliance with applicable procedures. An IH&S Representative may be any member of the Health & Safety Section. The IS&H representative may also provide information and support to the facility owner for completion of a chemical hazard material permit section.

4.0 RESPONSIBILITY - (cont.)

4.5 WMCO Employees - Shall adhere to these procedures and the specific requirements outlined on the Work Permit Form. Shall ensure that their badge number is entered in the employees assigned space before beginning the work. Shall review and adhere to this procedure permit and the specific requirements. The employee shall also be cognizant of the hazards associated with the job assignment being performed.

R Upon recognition of an emergency condition or discovery of a
R spill, all FMPC employees are instructed to notify personnel
R within the vicinity of the immediate danger area of the
R occurrence, to evacuate all personnel from the immediate area, and
R to activate the local building evacuation alarm. The employee is
R also responsible for notifying his immediate supervisor. In an
R emergency situation, the employees are instructed to report
R directly to the Communications Office on emergency phone 6511 or
R have the message relayed via the Security FM radio network. When
R reporting a spill, the employees are instructed to identify the
R material released, the location of the spill and its source, the
R extent of the spill, whether there are any injured personnel, and
R any additional information deemed necessary.

Note: Any personnel assigned to a job after the Work Permit Form has been issued shall enter his/her badge number in the "employee(s) assigned" space on the form. For any personnel that has been assigned to an asbestos job after the Asbestos Work Permit has been issued, the Supervisor-in-Charge shall contact the Industrial Hygiene Technician to verify the personnel is qualified to work with asbestos. The Supervisor-in-Charge shall assure that all copy holders of the form are notified of any changes.

4.6 Project Manager and/or Requisitioner - Responsible for advising construction management personnel of the requirements of this procedure through construction work order specifications and/or purchase orders, respectively.

5.0 GENERAL

5.1 The period of validity for the Work Permit Form must be shown in Section A of the Form. If the work must extend beyond the date and time shown in Section A, a new work permit shall be required. Extended time periods greater than 24 hours must be given careful consideration by the authorizing organization and may require periodic monitoring. Permit expiration time shown in Section F for Confined Space Entry, and in Section G for Open Flame/Welding, must be the same as shown in Section A. Confined Space Entry permits shall not be valid for longer than 12 hours. The Industrial Hygiene Technician has the authority to change the expiration date and times for these two permits after additional monitoring has been completed.

5.0 GENERAL (cont.)

5.2 In some situations (for example: Class "C" type confined space situation) a deviation will be allowed from specific requirements, "i.e.", initiation of a confined space entry permit, if necessary. Deviations shall be requested by the Facility Owner in writing to the Manager of Industrial Hygiene and Safety for the specific location and/or equipment to be considered. Approved deviations containing the specific requirements to be followed before and during employee entry shall be permanently posted at the entrance(s) to the Class "C" type confined space.

5.3 Supervisors shall maintain contact with their personnel who are working alone through the use of a portable radio or frequent visits to the job site. (Caution should be used when operating 2-way radios as their use is restricted in some plant areas).

5.4 General precautions identified in Sections C of the Work Permit Form must be completed prior to the responsible IH&S Representative being requested to approve the applicable permit.

5.5 If a radiation permit is required, it shall be obtained in accordance with Radiological Safety requirements identified in (See FMPC-2084, "Radiation Control Manual.")

R 5.6 If any unplanned or unwanted event occurs while performing work
R under the guidelines of this permit it must be reported
R immediately to the Supervisor-in-Charge and/or the AEDO.

6.0 PROCEDURE

6.1 Preparation of the FMPC Work Permit Form

R Note: The AEDO shall be notified in the event of any unplanned or
R unwanted condition with regard to the work being performed.

SUPERVISOR-IN-CHARGE

6.1.1 Initiates a Work Permit Form when a work task involves asbestos; working on a chemically hazardous system; open flame or welding; radiation hazard; and/or entering a confined space.

6.1.2 Completes section A - Background Information - on the FMPC Work Permit Form (See Attachment A).

Note: If employees change during the job, the new employee's name must be entered on the form, and be familiarized with all identified hazards and required personal protective equipment.

6.1.3 Identifies in Section B the types of permits required.

6.0 PROCEDURE (cont.)

FACILITY OWNER

6.1.4 Completes Section C - General Precautions (and Section E - Chemical/Hazardous Material Permit, if required) of the FMPC Work Permit Form and returns the form to the Supervisor-In-Charge.

Note: Nuclear safety checks should insure that enriched materials and radiation detection alarm system will not be impacted by the work task.

R 6.1.5 Work involving hazardous materials are applicable to OSHA
R Standard 29CFR 1910.120 will require a completed
R Project/Task Specific Health and Safety Plan with an all
R worker safety meeting briefing before work can begin. The
R purpose of this briefing is to ensure that all personnel
R understand the limiting conditions, the safety, health and
R environmental constraints and the incident identification
R and reporting requirements. The Project Engineer or Manager
R of the work area involved is responsible for this plan.

SUPERVISOR-IN-CHARGE

6.1.6 Contacts the appropriate IH&S Representative if an Asbestos Permit, Confined Space Entry Permit, and/or Open Flame/Welding Permit is required.

6.2 Preparation of the FMPC Work Permit Form For A Chemical/Hazardous Material Permit

SUPERVISOR-IN-CHARGE

6.2.1 Ensures the actions in Section 6.1, steps A-E of this procedure have been completed.

FACILITY OWNER

6.2.2 Identifies the type and name of material to be worked on and identifies the precautions taken and/or special precautions in Section E of the Work Permit Form. Enters his/her signature, badge number and date in the spaces provided.

SUPERVISOR-IN-CHARGE

6.2.3 Completes Section D-Personnel Protective Equipment based on the information in the General Precautions Section C and Section E of the Work Permit Form. (Contacts the Facility Owner/Production Supervisor to determine protective equipment requirements and then IH&S if clarification is necessary. Ensures the employee is informed, trained, and is qualified medically.)

6.0 PROCEDURE (cont.)

FACILITY OWNER

6.2.4 Completes and approves Section E of Work Permit Form. The work may proceed unless an Asbestos Permit, Confined Space Entry Permit, and/or an Open Flame/Welding Permit is required.

EMPLOYEE

R 6.2.5 Be knowledgeable of the permit requirements and follow
R these requirements.

Note: The Construction Subcontractor Supervisor-In-Charge must consult the Construction Environment Safety and Health Work Survey (Form FMPC-REST-2717) when completing Section D - Personnel Protective Equipment.

6.3 Preparation of the FMPC Work Permit Form when Asbestos is Involved

Note: Asbestos cannot be identified by the human eye. All existing insulation shall be considered as containing asbestos unless identified by labeling or confirmed by analysis as non-asbestos. An Industrial Hygiene Technician shall be contacted for verification as non-asbestos and/or to obtain samples for analysis.

INDUSTRIAL HYGIENE TECHNICIAN

6.3.1 Authorizes an Asbestos Permit in accordance with applicable IRS&T Procedures.

SUPERVISOR-IN-CHARGE AND THE FACILITY OWNER

R 6.3.2 Ensures the actions in Section 6.1 of this procedure have
R been completed.

Note: WMCO's notification of asbestos removal submitted by a point of contact (Planner Estimator or Supervisor) to Environmental Compliance must be received by DOE/ORO prior to removal to ensure that DOE meets the regulatory notification policy. Please defer to the new regulatory guide for notification Control of Asbestos removal RCG-AW10 in effect 9-3-90.

R 6.3.3 Identifies the personal equipment needed and signs section
R D of the Work Permit Form. (Contacts the Facility Owner/
R Production Supervisor to determine protective requirements
R and then IH&S if clarification is necessary. Ensure the
R employee is informed, trained, and is qualified medically.)

6.0 PROCEDURE - (cont.)

INDUSTRIAL HYGIENE TECHNICIAN

6.3.4 When the work area is properly prepared issues and signs section C of the Asbestos Permit, (Attachment B), which shall be attached to and posted with the Work Permit Form.

SUPERVISOR-IN-CHARGE

R R 6.3.5 Signs section C of the Asbestos Permit which shall be attached to and posted with the work permit form.

6.4 Preparation of the FMPC Work Permit Form for a Confined Space Entry

SUPERVISOR-IN-CHARGE AND/OR THE FACILITY OWNER

R R 6.4.1 Ensures the actions in Section 6.1 of this procedure have been completed.

INDUSTRIAL HYGIENE TECHNICIAN

6.4.2 Assesses the confined space to be entered or worked in for potential hazards, and issues a Confined Space Entry Permit.

SUPERVISOR-IN-CHARGE

R R 6.4.3 Assists the IH&S Representatives and Facility Owner in completing Section F Confined Space Entry Permit.

SAFETY AND FIRE INSPECTOR AND INDUSTRIAL HYGIENE MANAGER

R R R 6.4.4 Authorizes a Class "A" Space Entry on the permit form due to potential serious conditions. (Both signatures are required.)

INDUSTRIAL HYGIENE TECHNICIAN

6.4.5 Authorizes Class "B" and "C" Confined Space Entry on the permit form.

6.5 Preparation of the FMPC Work Permit Form for an Open Flame/Welding Permit

SUPERVISOR-IN-CHARGE

R R 6.5.1 Ensures the actions in Section 6.1 of this procedure have been completed.

6.0 PROCEDURE - (cont.)

SUPERVISOR-IN-CHARGE

6.5.2 Contacts Safety and Fire Inspector for authorization of a Open Flame/Welding Permit.

SAFETY AND FIRE INSPECTOR

R R R 6.5.3 Inspects work area to assure necessary precautions have been taken to prevent fire. Authorizes the Open Flame or Welding in accordance with IRS&T Procedures.

6.5.4 Completes Section G of the Work Permit Form and enters his/her signature and badge number in the blanks designated for the Safety and Fire Inspector.

6.6 Activation of Rescue in a Confined Space Emergency

STANDBY PERSON

6.6.1 Notifies the communication center to dispatch the Emergency Response Team to the confined space.

6.6.2 Prohibits the entry of personnel into the confined space until further directed by the Emergency Chief. (Safety and Fire Inspector in charge.)

Note: The standby person may attempt rescue but only from outside the confined space.

AEDO

R 6.6.3 Manages the emergency event.

EMERGENCY CHIEF

R R 6.6.4 Directs activities of the emergency response team members in performing confined space rescue.

6.7 Posting and Recording of the FMPC Work Permit Forms

SUPERVISOR-IN-CHARGE

R R R 6.7.1 Signs Work Permit Form in Section H to signify acceptance of permit requirements, and posts the top copy (white) of the Work Permit Form at the work site.

6.7.2 Files the middle copy (blue) of the Work Permit Form in his/her records. Construction subcontractor personnel shall forward this copy to the WMCO Project Managers/Construction Coordination through Rust Engineering.

6.0 PROCEDURE - (cont.)

IH&S REPRESENTATIVE

6.7.3 Receives the yellow copy of Work Permit Form and attached asbestos work permit (if applicable) from the Supervisor-in-Charge for storage in the IH&S Group's permanent files.

SUPERVISOR-IN-CHARGE

R R 6.7.4 Removes the copy posted at the work site after the activity has been completed.

6.7.5 Files posted copy with blue copy or forwards to IH&S for verification of persons added as "Assigned Employees" per Section 4.6.

RADIATION SAFETY REPRESENTATIVE

R 6.7.6 File results on the Radiation check of confined spaces.

7.0 APPLICABLE DOCUMENTS

Industrial Hygiene & Safety Manual, Volume VII, IH&S Section
NFPA-National Fire Code, Standard 51-B "Cutting and Welding Processes"

FMPC-2054, "WMCO Site Policies and Procedures Manual", Volume 1

Industrial, Radiological Safety and Training Department Procedures

FMPC-2084, "Radiation Control Manual"

R FMPC-2182, "Emergency and Non-Routine Event Notification and Reporting"

8.0 FORMS USED

FMPC-ES&H-2939 - FMPC Work Permit Form

FMPC-ES&H-2940 - FMPC Asbestos Permit Form

9.0 ATTACHMENTS

Attachment A - FMPC Work Permit Form

Attachment B - FMPC Asbestos Permit Form

NUMBER:	REVISION:	ISSUE DATE:
FMPC-516	2	04-23-91

ATTACHMENT A

FMPC WORK PERMIT

This work permit is to be completed in accordance with FMPC-516.

Work Permit Number: ' -- 00128

SECTION A - BACKGROUND INFORMATION *(To be completed by supervisor-in-charge)*

A. MAINTENANCE REQUEST NO.:

B. STARTING DATE & TIME: DATE: TIME:

C. EXPIRATION DATE & TIME: DATE: TIME:

D. EXACT LOCATION:

E. EQUIPMENT:

F. EXACT DESCRIPTION OF WORK TO BE CONDUCTED:

G. EMPLOYEE(S) ASSIGNED TO JOB: BADGE NO.:

H. SUPERVISOR(S)/WMCO PROJECT ENGINEER:

SECTION B - TYPES OF PERMITS REQUIRED *(Checked by supervisor-in-charge)*

- ☐ ASBESTOS (Copy to be attched)
- ☐ RADIATION (Copy to be attached)
- ☐ CHEMICAL/HAZARDOUS MATERIAL
- ☐ CONFINED SPACE ENTRY
- ☐ OPEN FLAME/WELDING

SECTION C - GENERAL PRECAUTIONS

ITEM	YES	NO
1. Equipment cleaned and purged		
2. Nuclear Safety checks completed		
3. Lock & Tag Procedures required and followed		
4. Water in space has been collected and sampled		
5. Complete isolation of process lines to space has been completed		
6. All mechanical equipment to the space have been tagged, disconnected and/or blocked		
7. Electrical isolation complete for Lock & Tag Procedure		
8. All lines within space have been cleaned and purged		

Equipment is safe and ready for work (FACILITY OWNER'S SIGNATURE):

BADGE NO.: DATE: TIME:

SECTION D - PERSONAL PROTECTIVE EQUIPMENT REQUIRED

EQUIPMENT	YES	NO	SPECIFY
Face Shield			
Hearing Protection			
Eye Protection			
Acid Splash Suit			
Gloves			
Respiratory Protection *(consult with IH rep.)*			
Flame Retardent Clothing			
Disposable Hood, Coveralls and Shoe Covers worn over Company-Issued Clothing			

OTHER PROTECTION REQUIREMENTS:

SUPERVISOR-IN-CHARGE SIGNATURE: BADGE NO.: DATE:

SECTION E - CHEMICAL/HAZARDOUS MATERIAL PERMIT

TYPE OF MATERIAL: NAME OF MATERIAL(S):

PRECAUTION TAKEN	YES	NO	DNA
1. Equipment and/or lines have been drained, flushed, purged, or neutralized			
2. Valves have been closed and locked (when feasible) and danger tagged			
3. Area isolated			
4. Safety shower is operable close to worksite			
5. Special clothing or other protective equipment required			

6. Special precautions:

FACILITY OWNER'S SIGNATURE: BADGE NO.: DATE:

NO.	DISTRIBUTION OF COPIES
1	POST AT JOB
2	SUPERVISOR-IN-CHARGE
3	IH&S *(RECORD COPY)*

SECTION F - CONFINED SPACE ENTRY PERMIT *(Valid for no more than 12 hours)*

ATMOSPHERIC GAS TESTING RESULTS

OXYGEN CONTENT		COMBUSTIBLE GAS		TOXICITY	
TIME	READINGS	TIME	READINGS	TIME	READINGS

PRECAUTIONS TAKEN/NEEDED	YES	NO	DNA
1. Forced ventilation required			
2. Work requires staging or ladder			
3. Ground Fault Interupting protection required			
4. Adequate/proper illumination required			
5. Standby notified what action to take			
6. Safety line and harness required			
7. Nonsparking tools required			
8. Periodic gas testing required			

STANDBY-WORKER COMMUNICATION:

SPECIAL INSTRUCTIONS:

TYPE OF CONFINED SPACE: ☐ CLASS A ☐ CLASS B ☐ CLASS C

IH&S REPRESENTATIVE SIGNATURE: BADGE NO.:

PERMIT ISSUED DATE: TIME:

SECTION G - OPEN FLAME/WELDING PERMIT

PRECAUTIONS VERIFIED *(within 35 feet of work)*	YES	NO	DNA
1. Combustibles, magnesium and uranium have been removed, covered or shielded.			
2. Flammable liquids have been removed or isolated.			
3. Wall and floor openings are covered or protected			
4. A flame retardent tarp has been suspended underneath work.			
5. A combustible gas check has been made.			
6. (work on walls/ceilings) All combustibles have been removed from opposite sides			
7. A Fire Watch will be required and will remain posted during breaks and for 30 minutes after work is completed.			
8. Fire Watch is supplied with an extinguisher and know-how to activate the nearest fire alarm.			
9. Fire & Safety Inspector shall be present during the burning operation			
10. Fire & Safety Inspector shall be present to monitor when the system is initially opened.			

COMBUSTIBLE GAS TESTING RESULTS:

EQUIPMENT/AREA CHECKED:

SPECIAL INSTRUCTIONS/PRECAUTIONS:

FIRE & SAFETY INSPECTOR SIGNATURE: BADGE NO.:

PERMIT ISSUED DATE: TIME:

SECTION H - WORK AUTHORIZATION REVIEWED AND FOUND ACCEPTABLE FOR USE

SUPERVISOR-IN-CHARGE SIGNATURE: BADGE NO.: DATE:

FMPC-OS&H-2930 (8/12/88)

27

FMPC-O-2657-1 (REV 1/29/91)

NUMBER:	REVISION:	ISSUE DATE:
FMPC-516	2	04-23-91

ATTACHMENT B

FMPC ASBESTOS WORK PERMIT

This permit is only valid when it is attached to the FMPC Work Permit Form which has Section A through D completed.

FMPC WORK PERMIT NO.:

Sections A & B contain descriptive information about the job and the qualifications of personnel. This information should be obtained from the supervisor-in-charge.

SECTION A - BACKGROUND AND REGULATORY INFORMATION *(To be supplied by supervisor-in-charge)*

1. Exact location:
2. Exact description of work to be conducted:
3. Amount of asbestos to be removed (in linear or/square feet):
4. Regulatory approval received to begin work: ☐ YES ☐ DNA
   * If yes, regulatory approval for this job starts _____ (DATE) and stops _____ (DATE)
5. Supervisor(s):

SECTION B - EMPLOYEE INFORMATION

1. Employee(s) assigned to Job:

NAME	BADGE NO.

	YES	NO
2. Employee(s) assigned to job have attended asbestos worker training in past twelve (12) months.		
3. Employee(s) assigned to job have attended glovebag training (applicable to glovebag removal only).		
4. Employee(s) assigned to job have been respirator fit-tested in last six(6) months.		
5. Employee(s) have been instructed by supervision of proper disposal methods.		

Section C contains items which shall be complied with on this job as indicated.

SECTION C - PRE-JOB REQUIREMENTS (SPECIFIED BY: _____ IH TECHNICIAN INITIALS _____ DATE _____ TIME)

PREPARATION OF WORK SITE *(All Asbestos Jobs)*

	REQ'D	DNA
1. Work area barricaded and/or roped off		
2. Asbestos warning signs posted at work site		
3. All small items removed from designated work area		
4. Large equipment secured and covered with plastic		
5. Floor and ledges covered with plastic		
6. Area ventilation systems locked and tagged out		
7. Nearby occupants shall be notified of asbestos work to prevent unauthorized access to work area		
8. Contact IH Technician to inspect work area preparation before asbestos removal begins		

PREPARATION OF WORK SITE *(For Total Enclosure Jobs Only)*

	REQ'D	DNA
1. Floor and wall penetrations covered and sealed		
2. Negative air enclosure set-up around work area		
3. Negative air machine operating continuously		
4. General area air samples taken before work begins		

RESPIRATORY PROTECTION REQUIRED

☐ HALF-MASK ☐ FULL-FACE ☐ AIRLINE

☐ OTHER: _____

FILTER TYPE REQUIRED:

☐ HIGH EFFICIENCY DUST (PURPLE)

☐ OTHER: _____

WORK PRACTICES

	REQ'D	DNA
1. Personal air samples required *(samples collected for entire shift when possible)*		
2. No smoking, eating or drinking permitted in work area		
3. HEPA-Filtered vacuum required for clean-up		
4. HEPA vacuum required at point of cut/drilling		
5. Glove bag removal of pipe insulation required		
6. Transite panels shall be removed whole		
7. Asbestos material shall not be allowed to drop		
8. Disposable clothing shall be periodically inspected for rips and tears		
9. Amended water shall be used to wet down material		
10. Asbestos material thoroughly wet down before removal		
11. Removed material promptly bagged *(not allowed to dry out)*		
12. Surfaces shall be coated with a sealant to encapsulate any remaining fibers		
13. Work area cleaned after completion of work each day		
14. Tools and equipment shall be cleaned of all residual dust before removal from work area.		
15. Personnel to decontaminate at each departure from work area		
16. Bag contaminated clothing and waste promptly		
17. Bagged waste material shall be placed in white drums or wooden boxes and labeled as asbestos waste *(exterior of containers shall be clean and asbestos-free)*		
18. Shower before lunch and at end of shift		

APPROVAL TO BEGIN WORK

IH TECHNICIAN SIGNATURE:	DATE:	* SUPERVISOR-IN-CHARGE SIGNATURE:	BADGE NUMBER:
	TIME:		DATE:

SECTION D - FINAL INSPECTION REQUIREMENTS (SPECIFIED BY: _____ IH TECHNICIAN INITIALS _____ DATE _____ TIME)

	REQ'D	DNA
1. Visual inspection of work area for residual dust required after completion of job *(contact IH Technician)*		
2. General area air samples required after completion of job *(contact IH Technician)*		
3. Obtain IH Technician approval before removal of barriers & warning signs		

* *This Asbestos Work Permit expires when removal of barriers and warning signs is approved, preparation of additional work area is needed, employees assigned to the job are changed, or job conditions require changes in permit requirements. In no case shall the permit be valid beyond the date in Section A.4. above.*

NO.	DISTRIBUTION OF COPIES
1	POST AT JOB SITE
2	IH&S *(RECORD COPY)*
3	IH&S *(FIELD COPY)*

APPROVAL TO REMOVE BARRIERS AND WARNING SIGNS

IH TECHNICIAN SIGNATURE:	DATE:	TIME:

FMPC-IRS&T-2940 (REV 1/10/90)

28

FMPC-O-2657-1 (REV 1/29/91)

2344

Westinghouse Materials Company of Ohio — FMPC	NUMBER: PP-FMPC-5010	REVISION: 0	ISSUE DATE: 12-26-90
	TITLE: MANAGEMENT OF LOW LEVEL WASTE (LLW)		
SITE POLICY AND PROCEDURE	APPROVED BY: W. H. BRITTON, PRESIDENT		

1.0 POLICY

Westinghouse Materials Company of Ohio (WMCO) shall manage and control the generation of low level waste to minimize waste production in a manner that is consistent with established environmental standards.

2.0 SCOPE

This procedure outlines the responsibilities and objectives for the LLW minimization effort at the Feed Material Production Center (FMPC).

3.0 DEFINITIONS

3.1 Low Level Waste (LLW) - Radioactive or radioactively contaminated material not classified as; high level, transuranic, spent nuclear fuel, uranium mill tailings, or mixed waste.

3.2 Waste Characterization - Evaluation of physical and chemical makeup and major radiological content and concentration of wastes.

3.3 Waste Disposal - Means, methods, and facilities used to transfer LLW to an off-site storage facility.

NOTE: On-site waste disposal is not authorized.

3.4 Waste Management - Planning, coordination, and direction of all functions of waste generation/storage/disposal.

3.5 Waste Minimization - Reducing, avoiding, and/or eliminating waste generation.

3.6 Waste Storage - Holding area for LLW awaiting disposition.

3.7 Waste Stream - LLW materials having similar characteristics that are generated by various on-site activities.

3.8 Waste Treatment - Any method, technique, or process that changes the physical or chemical characteristics of waste to render the waste less hazardous to transport, store, dispose of, or reduce in volume.

3.9 Compactible Waste - Solid waste that can be volume reduced by the application of pressure.

3.10 Non-Compactible Waste - Solid waste that cannot be reduced in volume by the application of pressure.

3.0 DEFINITIONS (cont.)

3.11 Recoverable LLW - Waste that can be recovered for reuse or for resale.

3.12 ALARA - As low as reasonably achievable.

4.0 RESPONSIBILITIES

4.1 Facilities Operations shall be responsible for the following:

4.1.1 Analyzing and implementing the LLW Management Plan.

4.1.2 Managing LLW generation, handling, storage, and shipment preparation.

4.1.3 Providing personnel and equipment for onsite movement of waste.

4.1.4 Providing personnel and equipment for offsite shipment of waste.

4.1.5 Generating Tally Sheets and "Waste Storage and Disposal" forms.

4.2 Quality shall be responsible for the following:

4.2.1 Maintaining a site-wide QA program for verifying and documenting that waste containers, waste container contents, container labels, and markings on the container and/or labels comply with Environmental Protection Agency (EPA), Department of Energy (DOE), Department of Transportation (DOT), and consignee requirements.

4.2.2 Inspecting construction waste containers to verify container integrity and ensure that the waste material is packed and secured in accordance with applicable Standard Operating Procedures.

4.3 Environmental Management shall be responsible for the following:

4.3.1 Surveying construction sites to determine the type and number of waste samples required and type of analyses to be performed.

4.3.2 Overseeing sampling and reviewing analyses results.

4.3.3 Responding to special waste handling problems on a case-by-case basis.

4.4 Project Management and Acquisition (PM&A) shall be responsible for managing construction waste in accordance with PO-FMPC-1003.

4.5 Environmental Compliance shall be responsible for providing determination of waste streams.

5.0 GENERAL

5.1 Limits

NOTE: Releases of radioactive effluents to the general environment shall be ALARA.

5.1.1 Maximum committed effective dose shall not exceed 25 mRem/year to any member of the public as a result of radioactive material releases.

5.1.2 Releases to the atmosphere shall not exceed the limitations imposed by 40 CFR 61.

5.2 Principle LLW Streams

5.2.1 Sump filter cake

5.2.2 Scrap wood (pallets)

5.2.3 Scrap metal

5.2.4 Trash (includes paper, rags, clothing, plastic)

5.2.5 Sludge (from sumps, containment basins, Biodenitrification (BDN) Effluent Treatment System, Sewage Treatment Plant)

5.2.6 Soil and rubble from construction

5.2.7 Process residues

5.2.8 Asbestos

5.2.9 Ceramics and glass

5.2.10 Dust collector bags

5.2.11 Floor sweepings

5.3 Objectives

5.3.1 Applied minimization shall avoid waste generation, reduce the volume and/or toxicity when waste is produced, and reduce/prevent adverse affects to the environment from waste generation.

5.3.2 Auditable programs (such as plans, programs, goals, incentives, procedures, and reports) shall ensure that LLW generated and shipped is minimized.

5.4 Methods

NOTE: Methods include, but are not limited to, those listed in this item.

5.0 GENERAL (cont.)

5.4.1 Planning phase to develop a program for the reduction in the amount of contaminated materials generated.

5.4.2 Substitution of materials, pre-planned material usage, cleaning to reduce/prevent cross contamination, segregation of non-radioactive waste.

5.4.3 Decontaminating the work area and equipment.

5.4.4 Shredding or compacting material.

5.4.5 Recycling material.

5.5 Environmental Monitoring

5.5.1 The environment at the FMPC and surrounding areas shall be continuously monitored to verify that contamination is not exceeding limitations.

5.6 Record Keeping and Reporting Requirements

5.6.1 The following records shall be kept and maintained:

5.6.1.1 A current and historical record of movement on site and inventory of stored material by Facilities Operations.

5.6.1.2 A current and historical record of LLW shipped off-site by the Controller and MC&A.

5.6.1.3 Waste manifests and associated documentation by PM&A.

5.6.1.4 Radiological survey reports by IRS&T.

5.6.1.5 Historical record of shipment/disposal certification documentation by Quality.

6.0 PROCEDURE

6.1 LLW Streams

6.1.1 Material Segregation

6.1.1.1 Process area solid waste that is identified as having low level contamination shall be segregated as compactible, noncompactible, or recoverable.

6.1.1.2 Compactible waste shall be transported to the Trash Baler.

6.0 **PROCEDURE** (cont.)

6.1.1.3 Noncompactible waste shall be segregated by material type. (Type I, Type II, Type III, or Type IV).

NOTE: Type I material consists of; soil, asphalt, rubber plastic, scrap/refuse metal, scrap wood, pallets, asbestos, and scrap filters. Type I material is generated by sources other than construction/demolition.

NOTE: Type II material is waste generated by construction projects.

NOTE: Type III material consists of process residues.

NOTE: Type IV material is process waste consisting of furnace cleanings, ceramics, glass, dust collector bags, and floor sweepings.

6.1.1.4 Type I and II material shall be boxed or drummed as appropriate.

6.1.1.5 Type III and IV material are segregated at the point of generation and placed in containers.

6.1.1.6 LLW containing free liquid shall be processed to have the liquid solidified or absorbed.

6.1.1.7 Recoverable waste shall be transferred to Decontamination for processing.

6.2 Treatment and Volume Reduction

6.2.1 Solid and Semi-solid Material

6.2.1.1 Material other than liquid may be compacted, decontaminated, containerized, or sent to Plant 8 for further processing.

6.2.2 Liquid Material

6.2.2.1 Liquid waste is processed and treated during individual plant operations, at the General Sump, Plant 8, and the BDN Facility.

6.2.2.2 Liquid waste is sampled at predetermined points during processing to ensure that the liquid complies with National Pollutant Discharge Elimination System (NPDES) requirements for disposal. Processing shall continue until NPDES requirements are met.

6.2.2.3 Sludge or filter cake precipitated from processed liquid shall be drummed for offsite disposal.

6.0 PROCEDURE (cont.)

6.2.2.4 Oils, paint, and solvents shall be containerized and stored pending disposition determination.

6.3 Packaging, On-Site Movement, Interim Storage, and Shipment of LLW

NOTE: Personnel packaging, moving, and storing LLW shall wear protective equipment and follow safety precautions specified by IRS&T.

6.3.1 Packaging LLW

NOTE: Material classified as LLW shall be placed in containers that are approved for LLW. Bulk material such as scrap wood, pallets, and metal shall be suitably enclosed or handled.

NOTE: Containerized and/or bulk LLW shall be handled and stored in such a manner that the spread of contamination is prevented.

6.3.1.1 LLW shall be packaged in approved containers in accordance with "Packaging Low Level Waste (LLW) for Offsite Disposal", "LLW Shipment Preparation", DOE Order 5820.2A and NVO 325 (if waste is being shipped to NTS).

6.3.1.2 Containers of LLW shall be marked with required identification. A certification program shall be implemented to ensure that labels and markings comply with DOE, DOT, and NTS requirements.

6.3.1.3 Containers, skids, and pallets shall be surveyed for contamination using applicable IRS&T department procedures.

6.3.1.4 Containers shall be moved to the storage area in accordance with applicable Standard Operating Procedures (SOP).

6.3.2 Interim Storage of LLW

6.3.2.1 Radiological surveys of the storage area shall be performed prior to and during, the storage period.

6.3.2.2 Storage areas and material shall be inspected in accordance with applicable SOPs when material is stored and on a regular basis to ensure that no spills have occurred, storage requirements are maintained, and documentation is present, current, accurate, and correctly characterized/classified.

6.3.2.3 Surveillance of radioactive material in storage areas shall be performed as required.

6.0 PROCEDURE (cont.)

6.3.2.4 LLW in storage areas shall be recorded, placed in inventory, and a current inventory record maintained.

6.3.2.5 Access to LLW storage areas shall be limited and controlled.

6.3.3 Shipment of LLW

NOTE: Off-site shipment of LLW shall be in compliance with DOE Order 1540.1.

6.3.3.1 A shipping order shall be completed and approved. The shipping order and all Tally Sheets shall be forwarded to the Traffic Section.

6.3.3.2 Storage and disposal forms and a plan of shipment shall be prepared.

6.3.3.3 All containers shall be marked and labeled prior to delivery for shipment. Markings and labels shall be applied in a conspicuous manner in accordance with Standard Operating Procedures, 49 CFR 100 thru 199, and NVO-325.

6.3.3.4 Vehicles and containers shall be monitored for contamination, vehicles inspected, and the shipment loaded.

6.3.3.5 Shipping documents, including the "Bill of Lading", shall be prepared and the consignee notified of impending shipment.

6.3.3.6 Shipment shall be escorted from the loading area to the Main Gate and the shipment verified.

7.0 APPLICABLE DOCUMENTS

7.1 DOE 5820.2A, "Radioactive Waste Management"

7.2 DOE 1540.1, "Materials Transportation and Traffic Management"

7.3 EPA, "Code of Federal Regulations"

7.3.1 Title 40

7.3.1.1 Part 190, Subchapter F, "Radiation Protection Programs"

7.3.1.2 Subchapter J, "Superfund, Emergency Planning, and community Right-to Know Programs"

7.3.1.3 Subchapter I, "Solid Wastes"

7.0 APPLICABLE DOCUMENTS (cont.)

7.3.1.4 Part 61, "National Emission Standards for Hazardous Air Pollutants"

7.3.2 Title 10, "Energy"

7.3.3 Title 49, "Transportation"

7.4 DOE Nevada Operations Office/Reynolds Elec. and Eng. Co. NVO-325, "Nevada Test Site Defense Waste Acceptance Criteria, Certification, and Transfer Requirements"

7.5 FMPC-503, "Spill Incident Reporting and Cleanup"

7.6 FMPC-2114, "Environment, Safety, Health, and Waste Management Plan"

7.7 FMPC-720, "Control of Construction Waste"

7.8 FMPC-511, "Control of Entry to the Waste Storage Area"

7.9 FMPC-314, "Packaging, On-Site Movement, and Off-Site Shipment of Material"

7.10 FMPC-2178, "FMPC Lot Marking and Color Coding System"

7.11 EPA SW-846, "Standard Methods"

SITE SERVICES PROCEDURE	PACKAGING LOW LEVEL RADIOACTIVE WASTE (LLRW) FOR OFF-SITE DISPOSAL	SOP 20-C-601 AREA: As Applicable
Authorization: R. L. Gardner, Facilities and Warehousing	Supersedes: 20-C-601, 10-11-88	Issue Date: 7-12-90

1.0 PURPOSE

This document provides the procedure for packaging contaminated waste for off-site disposal.

2.0 APPLICABILITY

This procedure is applicable to organizations at the FMPC which package low level radioactive waste including Construction personnel directed by WEMCO.

3.0 RESPONSIBILITIES

3.1 The waste generator shall be responsible for complying with this SOP.

3.2 The supervisor of the waste generation area shall be responsible for the following:

3.2.1 Specifying applicable scale check procedures and standard tare weight of packages.

3.2.2 Ensuring packaging materials are available for operators.

3.2.3 Ensuring that trained personnel package waste material.

3.2.4 Determining disposition of material identified in this SOP.

3.2.5 Ensuring that personnel package waste for shipment to meet applicable NTS, DOT, and EPA regulations.

3.2.6 Contacting Industrial Hygiene or Radiological Safety to determine the appropriate respiratory protection for the process being performed.

3.2.7 Providing operators with the required respiratory protection.

3.2.8 Ensuring the lid on an unfilled waste package is secured when no packaging is occurring to prevent additions of unknown materials.

3.2.9 Ensuring waste packages are weather-protected before, during, and after use to prevent moisture build-up.

3.2.10 Contacting Radiological Safety prior to opening any drum of radioactive or unknown material.

3.2.11 Contacting Industrial Hygiene prior to opening any drum suspected of containing asbestos.

R - MATERIAL REVISED, ADDED, OR DELETED.

3.0 RESPONSIBILITIES (cont.)

3.3 Waste Management shall be responsible for specifying the required waste container.

3.4 Solid Waste Compliance shall complete a RCRA determination as requested in accordance with this SOP.

4.0 DEFINITIONS

4.1 Low Level Radioactive Waste (LLRW) - Waste that contains radioactivity and is not classified as high level waste, transuranic waste, or spent nuclear fuel or 11e(2) byproduct material as defined by DOE Order 5820.2A. Test specimens of fissionable material irradiated for research and development only, and not for the production of power or plutonium, may be classified as low-level waste, provided the concentration of transuranic is less than 100 n Ci/g.

4.2 Waste Generator - Organization (point of generation) at which waste is originated.

4.3 Overpack - A container into which one or more smaller containers are placed.

4.4 Bulk Shipment - Objects or material such as scrap wood, metal, paper bales, pallets and other items, contaminated with radioactive material that are in compliance with DOT Regulation 173.425(c) (1) (IV).

4.6 Waste Container - A container which meets DOT/NTS waste shipment and disposal requirements.

4.7 RCRA (Resource Conservation and Recovery Act) - The Congressional Act which established safe and environmentally acceptable management practices for specific wastes. RCRA requires strict "cradle to grave" control and proper management of hazardous wastes.

4.8 Respirable Fines - Particulates and vapors capable of being inhaled.

5.0 REFERENCES

5.1 SOP 1-C-101, "Sampling Residue and Waste Materials"

R - MATERIAL REVISED, ADDED, OR DELETED.

6.0 INDUSTRIAL HEALTH AND SAFETY REQUIREMENTS

6.1 A defined safety system is not involved.

6.2 Safety glasses with side shields shall be worn unless other eye protection is specified.

6.3 Respiratory protection provided by the supervisor shall be worn when required.

6.4 Leather-palm gloves shall be worn when handling drums/boxes/containers, operating equipment, and when handling rough, sharp-edged, or contaminated material.

6.5 HEPA type filter vacuum cleaners or a vacuum system approved by IRS&T with a current DOP test label properly affixed to vacuum shall be used for cleaning.

6.6 Only certified personnel shall handle asbestos-containing materials.

6.7 Adequate ventilation must be provided when using silicone adhesive sealant.

6.8 Any circumstance which could have resulted in an intake of radioactive materials by inhalation, ingestion or absorption shall immediately be reported to a supervisor. The supervisor shall immediately report the circumstance of possible radioactive materials intake to IRS&T Radiological Safety Section for evaluation. The involved personnel shall report to the Urine Sampling Station at the end of their shift to complete a Investigation Report (IRR) (Form FMPC-ES&H-1458), and submit an incident urine sample. The involved personnel shall also report to the Urine Sampling Station at the start of their next shift to submit a followup urine sample. Employees are responsible for complying with additional requirements as specified by the Radiological Safety Section.

R - MATERIAL REVISED, ADDED, OR DELETED.

7.0 PROCEDURE

WARNING: A RADIOLOGICAL SAFETY TECHNICIAN SHALL BE PRESENT PRIOR TO OPENING ANY DRUM OF UNKNOWN RADIOACTIVE MATERIAL.

WARNING: AN INDUSTRIAL HYGIENE REPRESENTATIVE SHALL BE PRESENT PRIOR TO OPENING ANY DRUM SUSPECTED OF CONTAINING ASBESTOS.

CAUTION: PRIOR TO PERFORMING THE PACKAGING OPERATION, EACH CONTAINER SHALL BE INSPECTED BY THE WASTE GENERATOR TO ENSURE THE CONTAINER IS EMPTY.

NOTE: The waste generator shall package waste material in a container specified for disposal by Waste Management.

NOTE: Stencilling shall be one inch (minimum) legible block letters using waterproof ink/paint unless otherwise specified.

NOTE: Respirable fines shall be packaged only in an overpack.

7.1 Filling 55 and 85 Gallon Drums

7.1.1 Check that a "Prohibited Materials List" (see Figure 1) is displayed in the loading area. If the list is not posted, notify the supervisor.

WARNING: ANY MATERIAL RECEIVED WHICH IS ON THE "PROHIBITED MATERIALS LIST" SHALL NOT BE PACKAGED. THE SUPERVISOR SHALL BE NOTIFIED FOR DISPOSITION.

7.1.2 Obtain sample of material to be packaged per SOP 1-C-101 and request a RCRA determination and analysis to detect major radionuclides.

7.1.2.1 If analysis results determine material is RCRA, identify and package material per instructions provided by the supervisor.

7.1.2.2 If RCRA determination is negative, check "No" on "Prohibited Materials" item on Form FMPC-CONT-1945-XX Card (See Figure 2) and proceed to Step 7.1.3.

R 7.1.3 Inspect the empty drum for damage, such as rust/corrosion (Refer to
R Table 1), dents, holes, or other defects.

7.1.3.1 If damaged, mark the lids of the damaged drums with a black "X".

R - MATERIAL REVISED, ADDED, OR DELETED.

7.0 PROCEDURE (cont.)

7.1.3.2 Inform the supervisor of damaged drum condition and request disposition instructions.

7.1.4 Insert copy of sample analysis results inside the waterproof self-adhesive envelope, or equivalent, on the drum.

7.1.5 Stencil on the drum the lot and drum number in accordance with the FMPC Lot Marking and Color-Coding System or apply designated preprinted label (See Figure 4).

7.1.6 Weigh the empty drum per substeps 7.1.6.1 through 7.1.6.4.

7.1.6.1 Inspect the scale to be used.

NOTE: The supervisor shall specify the scale.

NOTE: The scale shall be inspected and operated in accordance with the SOP applicable to the area.

7.1.6.2 Move the drum on to the scale.

NOTE: The method of transporting the drum shall be specified by the supervisor.

7.1.6.3 Obtain the tare weight.

7.1.6.4 Remove the drum from the scale and move to the loading area.

7.1.7 Stencil the tare weight on the drum (See Figure 4).

7.1.8 Affix "Hazardous Material Warning Label" (See Figure 5) to drum as shown in Figure 4.

7.1.9 Record the data from the drum on to "Item Production/Certification/Identification" XX Card, Form FMPC-CONT-1945-XX (See Figure 2).

7.1.10 Remove the drum lock ring and lid.

7.1.11 By estimation, fill the 55 gallon drum to a maximum of 1,200 pounds or the 85 gallon drum to 1,000 pound maximum.

CAUTION: DO NOT FILL THE DRUM ABOVE THREE INCHES FROM THE TOP.

SL NOTE: Because weight varies according to material type, the volume of material packed will vary.

7.0 PROCEDURE (cont.)

7.1.12 Place a lid on the drum.

7.1.13 Secure the drum lid by installing a bolt-type lock ring and tighten the bolt.

7.1.14 Weigh drum per Item 7.4.

7.1.15 Mark the drum with the gross weight and net weight using two inch (minimum) letters.

7.1.16 Complete the "Item Production/Certification/Identification" XX Card, Form FMPC-CONT-1945-XX (see Figure 2) by entering the gross and net weights.

7.1.17 Using the hoist/crane and barrel grab or equipment specified by supervisor, place the drum with bolt of lock ring facing outward on a pallet.

7.1.18 Strap the drum(s) and move the pallet(s) to the storage area.

NOTE: The storage area shall be designated by the supervisor.

7.1.19 When the operation is completed and all pallets are stored, notify the supervisor that the drums are ready to be moved to the Waste Management Staging Area.

7.2 Filling a 48 Gallon Overpacked Drum

NOTE: The 48 gallon drum is referred to as the inner drum.

NOTE: The 55 gallon drum is referred to as the overpack drum.

7.2.1 Obtain sample of material in the inner drum per SOP 1-C-101 and request a RCRA determination and analysis to detect major radionuclides.

7.2.1.1 If analysis results determine material is RCRA, identify and package material per instructions provided by the supervisor.

7.2.1.2 If RCRA determination is negative, check "No" on the "Prohibited Materials" item on Form FMPC-CONT-1945-XX card (See Figure 2) and proceed to Step 7.2.2.

R - MATERIAL REVISED, ADDED, OR DELETED.

7.0 PROCEDURE (cont.)

7.2.2 Obtain an inner drum and inspect for rust, dents, holes, or other damage.

7.2.2.1 If damaged, mark the lid of the damaged drum with a black "X".

7.2.2.2 Inform the supervisor of damaged drum condition and request disposition instructions.

7.2.3 Obtain an overpack drum and inspect for rust, dents, holes, or other damage.

7.2.3.1 If damaged, mark the lid of the damaged drum with a black "X".

7.2.3.2 Inform the supervisor of damaged drum condition and request disposition instructions.

7.2.4 Remove the bolt ring and lid from the overpack drum.

7.2.5 Ensure the overpack drum contains no moisture. If moisture is present, remove moisture from the drum with a rag.

CAUTION: **OVERPACK DRUMS SHALL CONTAIN NO MOISTURE.**

7.2.6 Ensure the lot number, drum number, tare weight, gross weight, and net weight are stencilled on the overpack drum or a designated preprinted label is applied (See Figure 4).

7.2.7 Ensure that a completed "Item Production/Certification/Identification" XX card, Form FMPC-CONT-1945-XX accompanies the overpack drum. If not, complete a card using data from the drum.

7.2.8 As directed by the supervisor, place inner drum into the overpack drum.

7.2.9 Attach a filling collar to the inner drum.

7.2.10 By estimation, fill the inner drum to a maximum of 1200 pounds.

CAUTION: **DO NOT FILL THE DRUM ABOVE THREE INCHES FROM THE TOP.**

NOTE: Because weight varies according to material type, the volume of material packed may vary.

R - MATERIAL REVISED, ADDED, OR DELETED.

7.0 PROCEDURE (cont.)

7.2.11 Clean loose fill material from the filling collar.

CAUTION: DO NOT ALLOW LOOSE MATERIAL TO FALL INTO THE SPACE BETWEEN DRUMS.

7.2.12 Remove the filling collar and place lid on inner drum.

7.2.13 Install a vertical lever lock ring on the inner drum and lock the ring in place.

7.2.13.1 If the drum contains respirable fines, secure the lever lock ring with a wire seal and record the seal number and date on Form FMPC-CONT-1945-XX (See Figure 2).

7.2.14 Place lid on overpack drum and secure a bolt-type lock ring on the overpack drum for interplant shipment.

7.3 Overpacking Drums

NOTE: The inner drum refers to the filled drum to be placed inside the overpack drum.

7.3.1 If the material in the inner drum has not been sampled, remove a composite sample per SOP 1-C-101 and request a RCRA determination and analysis to detect major radionuclides.

7.3.1.1 If analysis results determine material is RCRA, identify and package material per the instructions of the supervisor.

7.3.1.2 If RCRA determination is negative, check "No" on the "Prohibited Materials" item on Form FMPC-CONT-1945-XX card (See Figure 2) and proceed to Step 7.3.2.

7.3.2 Ensure a vertical lever lock ring is installed on the inner drum.

7.3.3 Ensure the lot number, drum number, tare weight, gross weight, and net weight are stencilled on the inner drum or a designated preprinted label is applied (See Figure 4).

7.3.4 Ensure that a completed "Item Production/Certification/Identification" XX card, Form FMPC-CONT-1945-XX accompanies the inner drum. If not, complete a card using data from the drum.

R - MATERIAL REVISED, ADDED, OR DELETED.

7.0 PROCEDURE (cont.)

7.3.5 Secure the lever lock ring by tightening the lock nut on the inner drum.

7.3.6 Obtain the correct size overpack drum to contain the drum to be overpacked per Table 1.

TABLE 1
OVERPACK DRUM SIZE REQUIREMENTS

Drum to be Overpacked (Gallons)	Overpack Drum (Gallons)
24	30
30	55
48	55
55	85

7.3.7 Inspect the overpack drum for rust, dents, holes, or other damage.

7.3.7.1 If damaged, mark the lid of the damaged drums with a black "X".

7.3.7.2 Inform the supervisor of damaged drum condition and request disposition instructions.

7.3.8 Tare weigh the overpack drum per substeps 7.3.8.1 through 7.3.8.2.

7.3.8.1 If scale to be used has not been checked, inspect scale.

NOTE: The supervisor shall specify the scale.

NOTE: The scale shall be inspected and operated in accordance with the SOP applicable to the area.

7.3.8.2 Place drum on the scale and obtain tare weight.

7.3.9 Mark the tare weight on the overpack drum or apply designated preprinted label (See Figure 4).

7.3.10 Remove the bolt ring and lid from the overpack drum.

R - MATERIAL REVISED, ADDED, OR DELETED.

7.0 PROCEDURE (cont.)

7.3.11 Ensure the overpack drum contains no moisture.

CAUTION: OVERPACK DRUMS SHALL CONTAIN NO MOISTURE.

7.3.11.1 If moisture is present, remove moisture from the drum with a rag.

7.3.12 If not completed, inspect the hoist/crane to be used.

NOTE: The supervisor shall specify the hoist/crane to be used.

NOTE: Hoists/cranes shall be inspected and operated in accordance with the SOP applicable to the area.

7.3.13 Install a barrel grab over the inner drum.

7.3.14 Attach the barrel grab to the hoist/crane, lift the drum, and lower into the overpack drum.

WARNING: A SECOND OPERATOR SHALL USE A POLE TO STEADY 55 GALLON DRUMS.

NOTE: A forklift or handstacker may be used to lift drum as directed by the supervisor.

7.3.15 Remove the barrel grab from the drum.

7.3.16 Secure a lid and bolt-type lock ring on the overpack drum.

7.3.17 Stencil the overpack drum with drum number and lot number per FMPC Lot Marking and Color-Coding System (See Figure 4).

7.3.18 Affix Hazardous Material Warning Label (See Figure 5) on overpack drum per location in Figure 4.

7.3.19 Weigh the overpack per Item 7.4.

7.3.20 Mark the overpack drum with the gross weight and net weight using two inch (minimum) letters or apply designated preprinted label (See Figure 4).

7.3.21 Submit completed Form FMPC-CONT-1945-XX to the supervisor.

7.3.22 Using the hoist/crane and barrel grab, place the overpack drum, with bolt of lock ring facing outward, on a pallet.

R - MATERIAL REVISED, ADDED, OR DELETED.

7.0 PROCEDURE (cont.)

7.3.23 Strap the overpack drum(s) and move the pallet(s) to the storage area.

NOTE: The storage area shall be designated by the supervisor.

7.3.24 When the operation is completed and all pallets are stored, notify the supervisor that overpack drums are ready to be moved to the Waste Management Staging Area.

7.4 Weighing Singlepack/Overpack Drums

NOTE: A forklift or handstacker may be used to move drum as directed by supervisor.

7.4.1 If not already completed, inspect the scale to be used.

NOTE: The supervisor shall specify the scale to be used.

NOTE: The scale shall be inspected and operated in accordance with the SOP applicable to the area.

7.4.2 If not already completed, inspect the hoist/crane to be used.

NOTE: The supervisor shall specify the hoist/crane to be used or other equipment to move drum.

NOTE: The hoist/crane shall be inspected and operated in accordance with the SOP applicable to the area.

7.4.3 Install a barrel grab on the drum and attach the grab to the hoist/crane.

7.4.4 Using the hoist/crane, move the drum onto the scale.

7.4.5 Obtain the gross weight of the drum.

7.4.6 If the drum is over the specified weight limit, proceed as follows:

WARNING: MAXIMUM WEIGHT OF DRUMS SHALL BE 700 POUNDS FOR A 30 GALLON OVERPACK AND 1,200 POUNDS FOR 55 GALLON OVERPACKS, 55 GALLON SINGLEPACKS, AND 85 GALLON OVERPACKS. MAXIMUM WEIGHT OF 85 GALLON SINGLEPACKS SHALL BE 1,000 POUNDS.

R - MATERIAL REVISED, ADDED, OR DELETED.

7.0 PROCEDURE (cont.)

7.4.6.1 Remove lock ring(s) and lid(s) from the drums.

7.4.6.2 Remove material from the drum until the drum is within limit. Place the removed material in an approved container.

NOTE: The removed material may be included in an underweight drum of the same lot or packaged as another drum of the same lot.

7.4.6.3 Place lid securely on the drum.

7.4.6.4 If the drum contains respirable fines, install lever lock ring with a wire seal and record the seal number and date on Form FMPC-CONT-1945-XX (See Figure 2).

7.4.7 Using the hoist/crane, remove the drum from the scale and remove the grab from the drum.

7.5 Packaging Loose Material in Wood Boxes (4 ft. X 4 ft. X 7 ft.), (2 ft. X 4 ft. X 7 ft.), or (5 ft. X 5 ft. 6 inches X 37 inches)

7.5.1 Check that a Prohibited Materials List (See Figure 1) is displayed in the loading area. If not, notify the supervisor.

WARNING: ANY MATERIAL RECEIVED WHICH IS ON THE "PROHIBITED MATERIALS LIST" SHALL NOT BE PACKAGED. THE SUPERVISOR SHALL BE NOTIFIED FOR DISPOSITION.

7.5.2 Notify supervisor a RCRA determination is required.

NOTE: Supervisor shall request Solid Waste Compliance to complete a RCRA determination.

7.5.2.1 If material is determined to be RCRA, identify and package material per instructions provided by the supervisor.

7.5.2.2 If RCRA determination is negative, check "No" on the "Prohibited Materials" item on Form FMPC-CONT-1945-XX card (See Figure 2) and proceed to item 7.5.3.

7.0 PROCEDURE (cont.)

7.5.3 Visually inspect wooden boxes for holes, rot, or damage.

7.5.3.1 If damage is found, mark the top of the box with a black "X".

7.5.3.2 Notify the supervisor for disposition of damaged box.

7.5.3.3 Move rejected boxes to designated area.

7.5.4 Tare weigh each twentieth box per substeps 7.5.4.1 through 7.5.4.2.

7.5.4.1 If scale to be used has not been checked, inspect scale.

NOTE: The supervisor shall specify the scale.

NOTE: The scale shall be inspected and operated in accordance with the SOP applicable to the area.

7.5.4.2 Place box on the scale and obtain tare weight.

7.5.5 Record the weight on a "Box Tare Weight Check," Form FMPC-PRO-2867 (See Figure 3).

7.5.6 Place wooden box in loading area and remove lid.

7.5.7 Line the box with a sheet of 0.006 inch plastic that is approximately 14 feet X 16 feet, or with a preformed liner.

7.5.8 Place sheets of wet-strength polypropylene-pulp super absorbent fabric in the bottom of the box or add one 50 pound bag of uncalcined diatomaceous earth spread evenly in the bottom of the box.

7.5.9 Load loose material into the box as tightly as possible and fill box completely. As necessary, add other waste material until box is full.

WARNING: DO NOT ADD MATERIAL THAT COULD CAUSE HEAT OR PRESSURE; FIRE OR EXPLOSION; TOXIC DUST, FUMES, OR GASES; OR FLAMMABLE FUMES/GASES.

CAUTION: WHEN LOADING THE BOX, DO NOT EXCEED 5,000 POUNDS GROSS WEIGHT.

R - MATERIAL REVISED, ADDED, OR DELETED.

7.0 PROCEDURE (cont.)

7.5.9.1 If the box contains soil, add wet-strength polypropylene/pulp super absorbent fabric or one 50 pound bag of uncalcined diatomaceous earth in alternating layers, depending upon moisture level of soil, until the box is full.

7.5.10 When box is full, fold plastic over contents and place lid on box.

7.5.11 Using fabric strapping, secure lid on the box for interplant shipment by placing wire seal through strapping (See Figure 6).

7.5.12 Stencil or mark the lot number per FMPC Lot Marking & Color Coding System on the box (See Figure 7).

7.5.13 Affix Hazardous Material Warning Label (See Figure 5) in location per Figure 7.

7.5.14 Ensure scale check has been performed per applicable SOP in area of packaging operation.

7.5.15 Weigh the box and complete an "Item Production/Certification/ Identification" card, Form FMPC-CONT-1945-XX (See Figure 2) with lot number, tare weight, gross weight, and not weight of the box.

7.5.16 Mark the side of the box with the gross weight in two inch (minimum) letters (See Figure 7).

7.5.17 Notify the supervisor that the boxes are ready to be moved to the Waste Management Staging Area.

7.6 Loading Drums Into Wooden Boxes

7.6.1 Check that a Prohibited Materials List (See Figure 1) is displayed in the loading area. If not, notify the supervisor.

> WARNING: ANY MATERIAL RECEIVED WHICH IS ON THE "PROHIBITED MATERIALS LIST" SHALL NOT BE PACKAGED. THE SUPERVISOR SHALL BE NOTIFIED FOR DISPOSITION.

7.6.2 Notify supervisor a RCRA determination is required.

NOTE: Supervisor shall request Solid Waste Compliance to complete RCRA determination.

R - MATERIAL REVISED, ADDED, OR DELETED.

7.0 PROCEDURE (cont.)

7.6.2.1 If material is determined to be RCRA, identify and package material per instructions provided by the supervisor.

7.6.2.2 If RCRA determination is negative, check "No" on the "Prohibited Materials" item on Form FMPC-CONT-1945-XX card (See Figure 2) and proceed to item 7.6.3.

7.6.3 Visually inspect boxed for holes, wood deterioration, and damage.

7.6.3.1 If damage is found, mark top of box with a black "X".

7.6.3.2 Notify the supervisor of the damaged box condition and request disposition instructions.

7.6.3.3 Move damaged boxes to designated areas.

7.6.4 Tare weigh each twentieth box per 7.5.4.1 through 7.5.4.2.

7.6.5 Record the weight on a "Box Tare Weight Check", Form FMPC-PRO-2867 (See Figure 3).

7.6.6 Place empty wooden boxes in loading area and remove the lid.

7.6.7 Add one fifty-pound bag of unclacined diatomaceous earth spread evenly in the bottom of box or wet strength polypropylene-pulp super absorbent fabric.

7.6.8 Close lever lock rings on drums and secure by tightening the lock nut on the drum.

7.6.9 If not completed, inspect the hoist/crane to be used for lifting drums.

NOTE: The hoist/crane shall be inspected and operated per the SOP applicable to the area.

NOTE: The supervisor shall specify the hoist/crane to be used.

7.6.10 Place barrel grab over drum.

7.6.11 Attach an approved lifting device on each side of the drum lid ring.

NOTE: The supervisor shall specify the lifting device to be used.

7.0 PROCEDURE (cont.)

7.6.12 Raise drum over top of the box.

7.6.13 Lower drum into box and remove lifting device.

CAUTION: WHEN LOADING THE BOX, DO NOT EXCEED 5000 POUNDS GROSS WEIGHT.

7.6.14 Add one 50 pound bag of unclacined diatomaceous earth or sheets of wet strength polyproplyene-pulp super absorbent fabric over the drums if condensation/frost is present or could develop on exterior of drums.

7.6.15 Place lid on box and secure for interplant shipment.

7.6.16 Using fabric strapping, secure lid on the box for interplant shipment by placing wire seal through strapping (See Figure 6).

7.6.17 Obtain tabulated tare weight of box and contents from the Waste Technician.

7.6.18 Complete the "Item Production/Certification/Identification" card, From FMPC-CONT-1945-XX per box, including the weight and contents.

7.6.19 Mark the side of box with gross weight in two inch letters (See Figure 7).

7.6.20 Stencil or mark shipment log number and identification number on side of box (See Figure 7).

7.6.21 Affix Hazardous Material Warning label (See Figure 5) in location noted in Figure 7.

7.6.22 Notify the supervisor that the box is ready to be moved to the staging area.

7.7 Filling Metal Boxes With Loose Material

7.7.1 Check that a Prohibited Materials List (See Figure 1) is displayed in the loading area. If not, notify the supervisor.

WARNING: ANY MATERIAL RECEIVED WHICH IS ON THE PROHIBITED MATERIALS LIST SHALL NOT BE PACKAGED. THE SUPERVISOR SHALL BE NOTIFIED FOR DISPOSITION.

7.0 PROCEDURE (cont.)

7.7.2 Notify supervisor a RCRA determination is required.

NOTE: Supervisor shall request Solid Waste Compliance to complete RCRA determination.

7.7.2.1 If material is determined to be RCRA, identify and package material per instructions provided by the supervisor.

7.7.2.2 If RCRA determination is negative, check "No" on the "Prohibited Materials" item on Form FMPC-CONT-1945-XX card (See Figure 2) and proceed to item 7.7.3.

7.7.3 Visually inspect boxes for rust, dents, or holes including the bottom.

7.7.3.1 If damaged, mark top of box with a black "X".

7.7.3.2 Notify supervisor of condition and request disposition.

7.7.3.3 Move rejected boxes to designated area.

7.7.4 If the bottom of the box has a drain plug, ensure plug is securely in place.

7.7.5 Move the empty metal box to the staging area.

7.7.6 Remove banding and cardboard packing material from the metal box and place in a designated container.

7.7.7 Tare weigh each twentieth box per 7.5.4.1 through 7.5.4.2.

7.7.8 Record the weight on a "Box Tare Weight Check", Form FMPC-PRO-2867 (See Figure 3).

7.7.9 Remove lid and place in a designated location to prevent damage.

7.7.10 Add one fifty-pound bag of uncalcined diatomaceous earth spread evenly or sheets of wet-strength polypropylene pulp, super absorbent fabric in the bottom of the box.

R - MATERIAL REVISED, ADDED, OR DELETED.

7.0 PROCEDURE (cont.)

7.7.11 Load loose materials in box as tightly as possible.

CAUTION: MATERIAL SHALL NOT BE LOADED IN BOX ABOVE THREE INCHES FROM THE TOP.

CAUTION: WHEN LOADING THE BOX, DO NOT EXCEED 6,000 POUNDS GROSS WEIGHT.

7.7.12 When box is full, place lid on box.

7.7.13 Using fabric strapping, secure lid on the box for interplant shipment by placing wire seal through strapping (See Figure 6).

7.7.14 If not already completed, perform scale check according to the applicable SOP in the area of the packaging operation.

NOTE: Supervisor shall specify the scale to be used.

NOTE: The scale shall be inspected and operated in accordance with the applicable scale procedure for the area of the packaging operation.

7.7.15 Weigh the box.

7.7.16 Mark the side of the box with the gross weight in two-inch (minimum) letters (See Figure 7).

7.7.17 Affix Hazardous Material Warning Label (See Figure 5) in location as shown in Figure 7.

7.7.18 Stencil or mark the content description on the side of the box (Figure 7).

7.7.19 Fill out an "Item Production/Certification/Identification card, Form FMPC-CONT-1945-XX (See Figure 2), including standard tare weight specified by the supervisor, net weight, gross weight, and content description.

NOTE: Ensure the weight of box pins is included in gross weight.

7.7.20 Notify the supervisor that boxes are ready to be moved to the Waste Management staging area.

7.0 PROCEDURE (cont.)

7.8 Loading Drums in Metal Boxes

7.8.1 Check that a Prohibited Materials List (See Figure 1) is displayed in the loading area. If not, notify the supervisor.

> **WARNING:** ANY MATERIAL RECEIVED WHICH IS ON THE PROHIBITED MATERIALS LIST SHALL NOT BE PACKAGED. THE SUPERVISOR SHALL BE NOTIFIED FOR DISPOSITION.

7.8.2 Notify supervisor a RCRA determination is required.

NOTE: Supervisor shall request Solid Waste Compliance to complete RCRA determination.

7.8.2.1 If material is determined to be RCRA, package material per SOP 20-C-605.

7.8.2.2 If RCRA determination is negative, check "No" on the "Prohibited Materials" item on Form FMPC-CONT-1945-XX card (See Figure 2) and proceed to item 7.8.3.

7.8.3 Visually inspect boxes for rust, holes, or dents.

7.8.3.1 If damage is found, mark top of box with a black "X".

7.8.3.2 Notify supervisor of condition and request disposition instructions.

7.8.4 Place empty metal box in staging area.

7.8.5 Remove the banding and cardboard packing material from box and place in designated container.

7.8.6 Tare weigh each twentieth box per 7.5.4.1 through 7.5.4.2.

7.8.7 Record the weight on a "Box Tare Weight Check", Form FMPC-PRO-2867 (See Figure 3).

7.8.8 Remove lid from metal box and place in designated location to prevent damage.

7.8.9 Check drums to ensure that lever lock rings are closed.

7.8.9.1 If the drum contains respirable fines, install wire seal through lever lock ring.

R - MATERIAL REVISED, ADDED, OR DELETED.

7.0 PROCEDURE (cont.)

7.8.10 Complete an "Item Production/Certification/Identification Card", Form FMPC-CONT-1945-XXX (See Figure 2) per drum and insert the drum lot number and tare weight on the card.

7.8.11 Ensure that the hoist/crane to be used has been inspected.

NOTE: Inspect and operate the hoist/crane in accordance with the applicable SOP for the area.

7.8.12 Place barrel grab over drum.

7.8.13 Attach the lifting device specified by the supervisor on each side of the drum ring.

7.8.14 Position drum over the top of the box.

7.8.15 Lower drum into box and remove the lifting device.

7.8.16 Repeat steps 7.7.11 thru 7.7.15 until all drums are loaded.

CAUTION: DO NOT EXCEED A MAXIMUM GROSS WEIGHT OF 6,000 POUNDS.

7.8.17 When the box is filled, add a fifty-pound bag of uncalcined diatomaceous earth or sheets of wet-strength polypropylene pulp, super-absorbent fabric to the top of drums if condensation/frost is present or could develop on exterior of drums.

7.8.18 Place the lid on the box and secure the lid for interplant shipment.

7.8.19 Using fabric strapping, secure lid on the box for interplant shipment by placing wire seal through strapping (See Figure 6).

7.8.20 Obtain tabulated tare weight of box and contents.

7.8.21 Record the tabulated tare box weight, contents, and gross weight on the FMPC-CONT-1945-XX card.

7.8.22 Stencil on the box the shipment log number, box identification, and gross weight (Figure 7).

NOTE: The gross weight marking shall be two inches (minimum).

R - MATERIAL REVISED, ADDED, OR DELETED.

7.0 PROCEDURE (cont.)

7.8.23 Affix Hazardous Material Warning Label (See Figure 5) as shown in Figure 7.

7.8.24 Notify the supervisor that boxes are ready to be moved to the Waste Management staging area.

7.9 Loading Asbestos in Boxes

> WARNING: ONLY CERTIFIED PERSONNEL SHALL HANDLE AND LOAD ASBESTOS-CONTAINING MATERIAL.

7.9.1 Check that a Prohibited Materials List (See Figure 1) is displayed in the loading area. If not, notify the supervisor.

> WARNING: ANY MATERIAL RECEIVED WHICH IS ON THE PROHIBITED MATERIALS LIST SHALL NOT BE PACKAGED. THE SUPERVISOR SHALL BE NOTIFIED FOR DISPOSITION.

7.9.2 Notify supervisor a RCRA determination is required.

NOTE: Supervisor shall contact Solid Waste Compliance for RCRA determination.

7.9.2.1 If material is determined RCRA, identify and package per instructions provided by the supervisor.

7.9.2.2 If material is not RCRA, check "No" on the "Prohibited Materials" item on Form FMPC-CONT-1945-XX card (See Figure 2) and proceed to 7.9.3.

7.9.3 Visually inspect boxes for rust, holes, or dents.

7.9.3.1 If damage is found, mark the top of the box with a black "X".

7.9.3.2 Notify the supervisor of damaged box condition and request instructions.

7.9.3.3 Move damaged boxes to designated area.

7.9.4 Move the empty box to the staging area.

R - MATERIAL REVISED, ADDED, OR DELETED.

7.0 PROCEDURE (cont.)

7.9.5 Remove banding and cardboard packing material and place in a designated container.

7.9.6 Tare weigh each twentieth box per 7.5.4.1 through 7.5.4.2.

7.9.7 Record the weight on a "Box Tare Weight Check", Form FMPC-PRO-2867 (See Figure 3).

7.9.8 Remove and place box lid in a designated location to prevent damage.

7.9.9 Stencil lot number per FMPC Lot Marking & Coding System or content description on the box (See Figure 7).

7.9.10 Affix Hazardous Material Warning Label (See Figure 5) to box in location as shown in Figure 7.

7.9.11 Add one fifty-pound bag of uncalcined diatomaceous earth spread evenly in the bottom of the box.

7.9.12 Adhere "Danger-Asbestos" stickers on two sides and lid of box.

7.9.13 Check to ensure that asbestos is double bagged in labeled asbestos disposal bags.

7.9.14 Load asbestos in box.

CAUTION: **DO NOT EXCEED MAXIMUM GROSS WEIGHT OF 6,000 POUNDS FOR METAL BOXES/5,000 POUNDS FOR WOODEN BOXES.**

7.9.15 Place lid on the box.

7.9.16 Using fabric strapping, secure lid on the box for interplant shipment by placing wire seal through strapping (See Figure 6).

7.9.17 Perform scale check per the applicable SOP in the area of the packaging operation.

7.9.18 As directed by the supervisor, move box to scale.

7.9.19 Weigh the box.

7.9.20 Mark the side of the box with gross weight in two inch letters (See Figure 7).

7.0 PROCEDURE (cont.)

7.9.21 Fill out an "Item Production/Certification/Identification" card, Form FMPC-CONT-1945-XX (See Figure 2), including tare weight, lot number, content description, gross weight, and net weight.

7.9.22 Notify the supervisor that boxes are ready to be moved to the Waste Management staging area.

7.10 Packaging Material into Sea/Land Containers

7.10.1 Notify supervisor a RCRA determination is required.

NOTE: Supervisor shall request Solid Waste Compliance to complete RCRA determination.

7.10.1.1 If material is determined to be RCRA, identify and package material per instructions provided by the supervisor.

7.10.1.2 If RCRA determination is negative, check "No" on the "Prohibited Materials" item on Form FMPC-CONT-1945-XX card (See Figure 2) and proceed to item 7.10.2.

7.10.2 Check the container for damage such as structurally affecting dents, stress cracks, flaking paint, rust, holes, and water leaks.

NOTE: Do not place containers directly on ground.

7.10.2.1 If container is damaged, mark a black "X" on the side of the container.

7.10.2.2 Notify supervisor of damage and request disposition of damaged container.

7.10.2.3 Move unacceptable container to designated area.

7.10.3 Ensure that container tare weight is marked on the container. If not, notify the supervisor.

7.10.4 Attach a Prohibited Materials List (See Figure 1) to the container in a visible location.

WARNING: ANY MATERIAL RECEIVED WHICH IS ON THE PROHIBITED MATERIALS LIST SHALL NOT BE PACKAGED. THE SUPERVISOR SHALL BE NOTIFIED FOR DISPOSITION.

R - MATERIAL REVISED, ADDED, OR DELETED.

7.0 PROCEDURE (cont.)

7.10.5 In a well ventilated area, apply a continuous bead of GE RTV SILICONE RUBBER ADHESIVE SEALANT, or equivalent, on all seams and corners of the container interior.

WARNING: VAPOR FROM SILICONE ADHESIVE IS HAZARDOUS.

NOTE: Adhesive shall be applied to the farthest inside section first and outward from container to minimize inhalation of vapor.

NOTE: The bead of sealant shall be a minimum of 1/4 inch.

7.10.6 Check to ensure all vents are closed and sealed.

7.10.7 Line the container floors with wet-strength polypropylene/pulp super absorbent fabric, blotter paper, or uncalcined diatomaceous earth.

7.10.8 Cover the absorbent fabric, blotter paper or uncalcined diatomaceous earth with a 0.006 inch thick plastic sheet that extends at least 36 inches up each side of the container.

7.10.9 Place plywood on the container floor and up to approximately four feet in height on all sides.

NOTE: If top loading sea/land container, line the entire floor and sides with plywood.

7.10.10 Remove all container outside markings not related to load.

7.10.11 Load the container. Use all the space in the container.

CAUTION: AN UNSEALED CONTAINER SHALL BE LOCKED OR TEMPORARILY SEALED WHEN NOT ATTENDED.

7.10.12 After the container has been filled, clean the back ledge of the container.

7.10.13 Line the box lid/door opening with 0.006 inch thick plastic, or similar material to a height of 18 inches.

7.10.14 Add a roll of wet-strength polypropylene/pulp super absorbent fabric extending width of container on base of lid/door.

7.0 PROCEDURE (cont.)

7.10.14.1 If moisture is still present, add additional uncalcined diatomacious earth or sheets of wet-strength polypropylene, super-absorbent fabric as needed.

7.10.15 Using plywood and 2 inch x 4 inch wood, or other similar type materials, secure the load inside the container.

7.10.16 Seal the door/lid seam with a 1/4 inch minimum bead of GE RTV SILICONE RUBBER ADHESIVE SEALANT, or the equivalent.

> **WARNING: VAPOR FROM SILICONE ADHESIVE IS HAZARDOUS.**

7.10.17 Close one door and apply GE RTV SILICONE RUBBER ADHESIVE SEALANT, or the equivalent, around the crack. Then close and seal the other door.

7.10.18 Complete applicable sections of the "Item Production/Certification/ Identification" card, Form FMPC-CONT-1945-XX (See Figure 2).

7.10.19 Notify the supervisor that sea/land containers are ready to be moved to Waste Management staging area.

7.11 Packaging Other Bulk Shipments

7.11.1 Notify supervisor of bulk packaging requirements.

7.11.2 Check that a Prohibited Materials List (See Figure 1) is displayed in the loading area. If not, notify the supervisor.

> **WARNING: ANY MATERIAL RECEIVED WHICH IS ON THE "PROHIBITED MATERIALS LIST" SHALL NOT BE PACKAGED. THIS MATERIAL SHALL BE SEGREGATED AND SUPERVISOR NOTIFIED FOR DISPOSITION.**

7.11.3 Notify supervisor a RCRA determination is required.

NOTE: Supervisor shall request Solid Waste Compliance to complete RCRA determination.

7.11.3.1 If material is determined to be RCRA, identify and package material per instructions provided by the supervisor.

7.11.3.2 If RCRA determination is negative, check "No" on the "Prohibited Materials" item on Form FMPC-CONT-1945-XX card (See Figure 2) and proceed to item 7.11.4.

7.0 PROCEDURE (cont.)

7.11.4 Package and identify material or item per written instructions of the supervisor.

7.11.5 Complete an "Item Production/Certification/Identification" card, Form FMPC-CONT-1945-XX (See Figure 2) and, if necessary, a "Box Tare Weight Check", Form FMPC-PRO-2867 (See Figure 3).

7.11.6 Notify the supervisor when loading is complete.

8.0 APPLICABLE FORMS

8.1 FMPC-CONT-1945-XX, "Item Production/Certification/Identification"

8.2 FMPC-PRO-2867, "Box Tare Weight Check"

R
R

TABLE 1
CORROSION INSPECTION CATEGORIES

R

CATEGORY	CHARACTERISTIC
A	Severe corrosion with deep pitting and/or metal flaking posing loss to container integrity (See Figure 8)
B	Corrosion with shallow pitting and/or mild metal flaking which does not pose a loss to container integrity (See Figure 9)
C	Surface rust with no pitting and mild paint flaking which exposes bare metal but does not pose a loss to container integrity (See Figure 10)

R - MATERIAL REVISED, ADDED, OR DELETED.

PACKAGING GUIDELINES
FOR
WASTE GENERATOR

PACKAGE HAS BEEN PROPERLY PREPARED FOR CLOSING:

- NO LIQUIDS OF ANY KIND HAVE BEEN PLACED IN CONTAINER
- HEAVY/BULKY ITEMS HAVE BEEN SECURED WITHIN CONTAINER
- ALL AVAILABLE SPACE HAS BEEN UTILIZED EFFICIENTLY
- PROHIBITED MATERIALS HAVE BEEN EXCLUDED (SEE BELOW)
- PACKAGING HAS NOT BEEN DAMAGED DURING LOADING
- LINER IS IN PLACE AND PROPERLY LAPPED AND SEALED

PROHIBITED MATERIALS

COMPRESSED GASES
(UNPUNCTURED AEROSOL CANS INCLUDED)

EXPLOSIVES

FREE LIQUIDS

FINE PARTICULATES (RESPIRABLE FINES)

HAZARDOUS WASTE
(SUSPECT RCRA MATERIALS INCLUDED)

CORROSIVE MATERIALS

ETIOLOGIC AGENTS

PROHIBITED MATERIALS LIST
Figure 1

R - MATERIAL REVISED, ADDED, OR DELETED.

CARD XX ITEM PRODUCTION/CERTIFICATION/IDENTIFICATION 121402

P.O. NO.	SOURCE	CLASS	MATERIAL TYPE	LOT SEQUENCE NO	DATE MO DAY YEAR	SHIFT	BADGE NO	PACKAGE NO

SEAL NUMBER	SEAL DATE MONTH	DAY	YEAR

WASTE DESCRIPTION AND COMMENTS

PACKAGE TYPE
PACKAGE SIZE

PACKAGE PHYSICAL CERTIFICATION	YES	NO
EMPTY CONTAINER AT START		
RUST HOLES OR DENTS		
MATERIAL IS AS CODED		
PROHIBITED MATERIALS		
LIQUIDS IN CONTAINER		
MINIMUM OF VOID SPACE		
PACKAGE SECURED		
DRAIN PLUG SECURED		

PLANT
PROD MPA
PLANT ID
MRA ID

GROSS WEIGHT
TARE WEIGHT
NET WEIGHT

GENERATOR SIGNATURE
SUPERVISOR SIGNATURE DATE
FMPC-CONT-1945-XX (REV 12-19-88)

*U.S. GPO: 1990-749-781

CARD 65 ITEM PRODUCTION/CERTIFICATION/IDENTIFICATION 121402

P.O. NO.	SOURCE	CLASS	MATERIAL TYPE	LOT SEQUENCE NO	DATE MO DAY YEAR	SHIFT	BADGE NO	PACKAGE NO

SEAL NUMBER	SEAL DATE MONTH	DAY	YEAR

WASTE DESCRIPTION AND COMMENTS

PACKAGE TYPE
PACKAGE SIZE

PACKAGE PHYSICAL CERTIFICATION	YES	NO
EMPTY CONTAINER AT START		
RUST HOLES OR DENTS		
MATERIAL IS AS CODED		
PROHIBITED MATERIALS		
LIQUIDS IN CONTAINER		
MINIMUM OF VOID SPACE		
PACKAGE SECURED		
DRAIN PLUG SECURED		

PLANT
PROD MPA
PLANT ID
MRA ID

GROSS WEIGHT
TARE WEIGHT
NET WEIGHT

GENERATOR SIGNATURE
SUPERVISOR SIGNATURE DATE
FMPC-CONT-1945-65 (REV 12-19-88)

CARD 66 ITEM PRODUCTION/CERTIFICATION/IDENTIFICATION 121402

P.O. NO.	SOURCE	CLASS	MATERIAL TYPE	LOT SEQUENCE NO	DATE MO DAY YEAR	SHIFT	BADGE NO	PACKAGE NO

SEAL NUMBER	SEAL DATE MONTH	DAY	YEAR

WASTE DESCRIPTION AND COMMENTS

PACKAGE TYPE
PACKAGE SIZE

PACKAGE PHYSICAL CERTIFICATION	YES	NO
EMPTY CONTAINER AT START		
RUST HOLES OR DENTS		
MATERIAL IS AS CODED		
PROHIBITED MATERIALS		
LIQUIDS IN CONTAINER		
MINIMUM OF VOID SPACE		
PACKAGE SECURED		
DRAIN PLUG SECURED		

PLANT
PROD MPA
PLANT ID
MRA ID

GROSS WEIGHT
TARE WEIGHT
NET WEIGHT

GENERATOR SIGNATURE
SUPERVISOR SIGNATURE DATE
FMPC-CONT-1945-66 (REV 12-19-88)

ITEM PRODUCTION/CERTIFICATION/IDENTIFICATION
Form No. FMPC-CONT-1945-XX
Figure 2

R - MATERIAL REVISED, ADDED, OR DELETED.

FMPC
PRODUCTION OPERATIONS WASTE OPERATIONS

BOX TARE WEIGHT CHECK

BOX NUMBER	DATE	TARE WEIGHT (LBS.)	BADGE NUMBER

FMPC-PRO-2867 (7/90)

BOX TARE WEIGHT CHECK
FMPC-PRO-2867
Figure 3

R - MATERIAL REVISED, ADDED, OR DELETED.

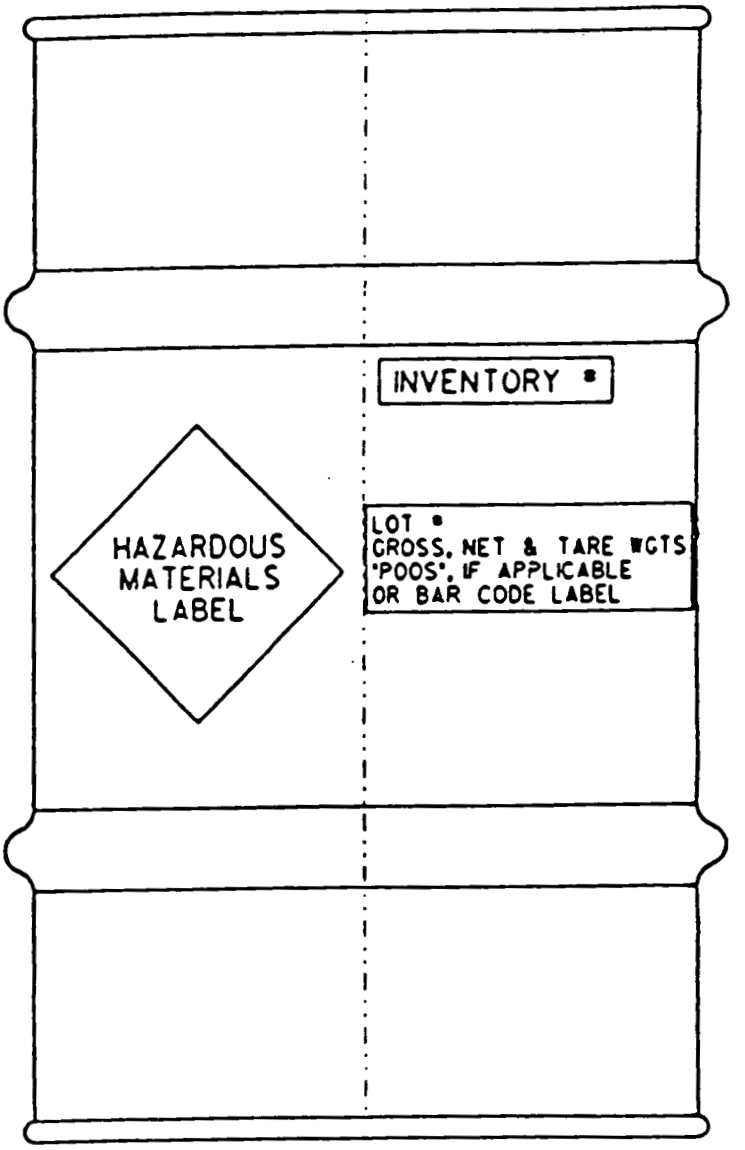

DIAGRAM OF LLRM CONTAINER LABELING
Figure 4

R - MATERIAL REVISED, ADDED, OR DELETED.

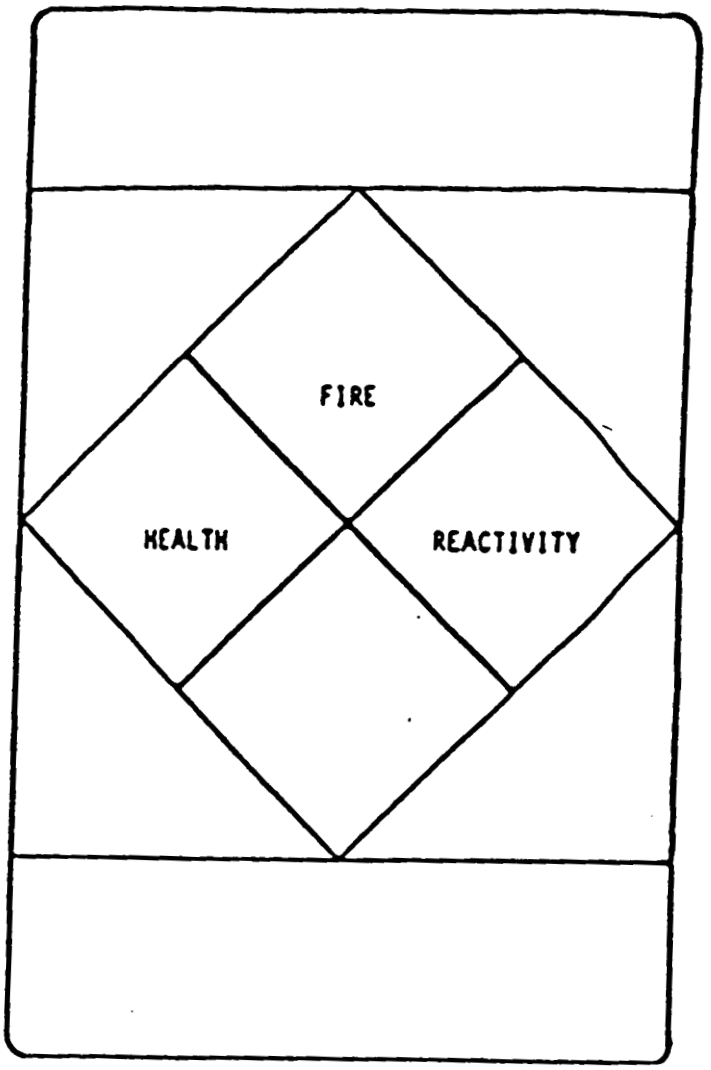

HAZARDOUS MATERIAL WARNING LABEL
Figure 5

R - MATERIAL REVISED, ADDED, OR DELETED.

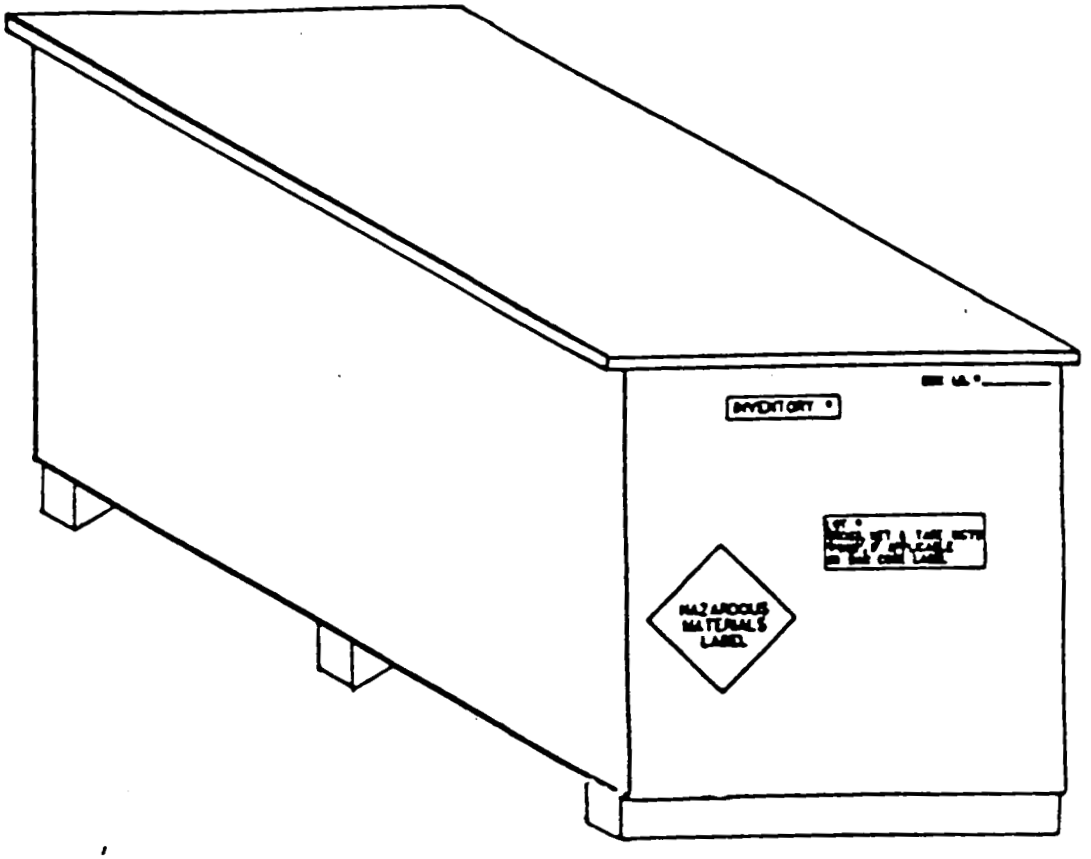

DIAGRAM OF LLRM BOX LABELING
Figure 6

R - MATERIAL REVISED, ADDED, OR DELETED.

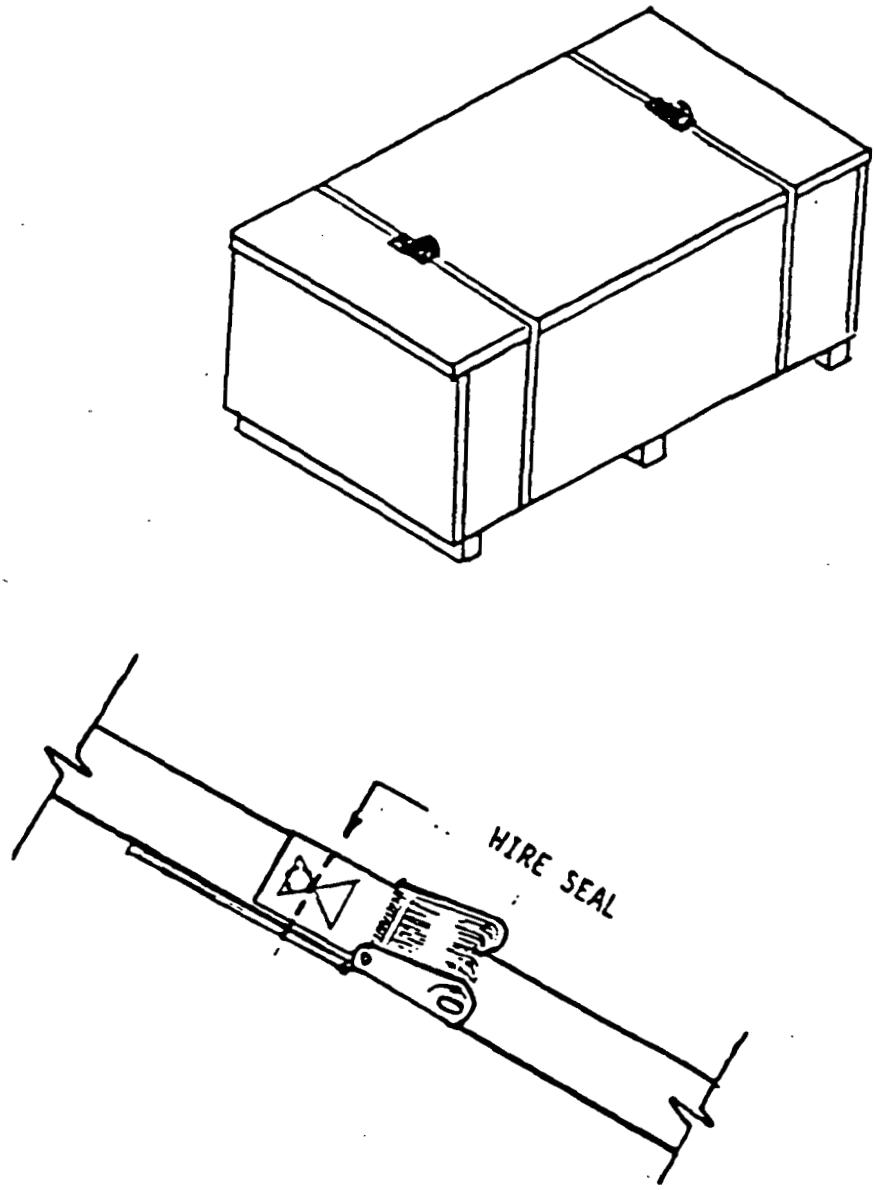

DIAGRAM OF BOX FOR INTERPLANT TRANSFER
Figure 7

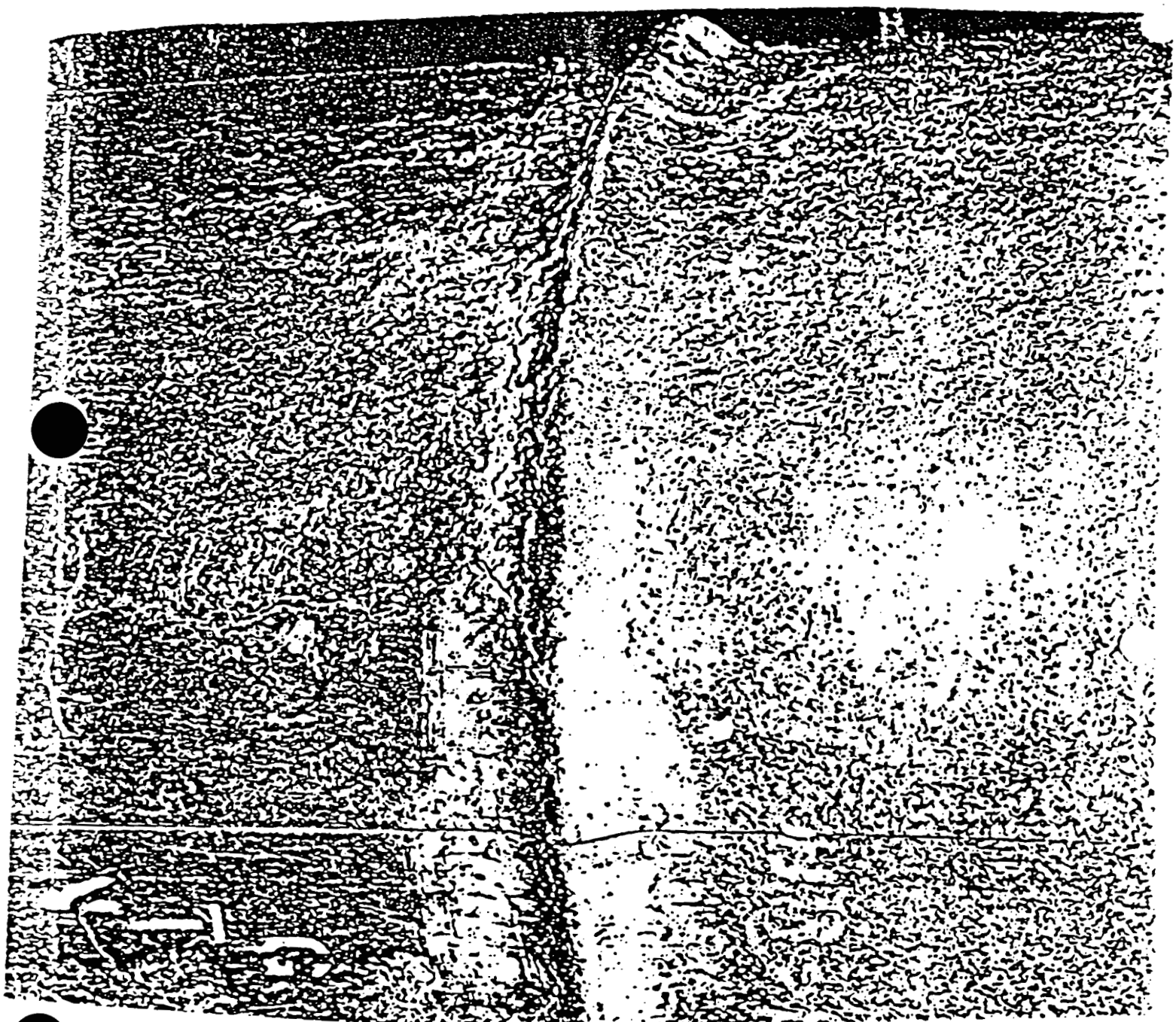

R PHOTOGRAPH OF DRUM CORROSION-CATEGORY A
R Figure 8

R - MATERIAL REVISED, ADDED, OR DELETED.

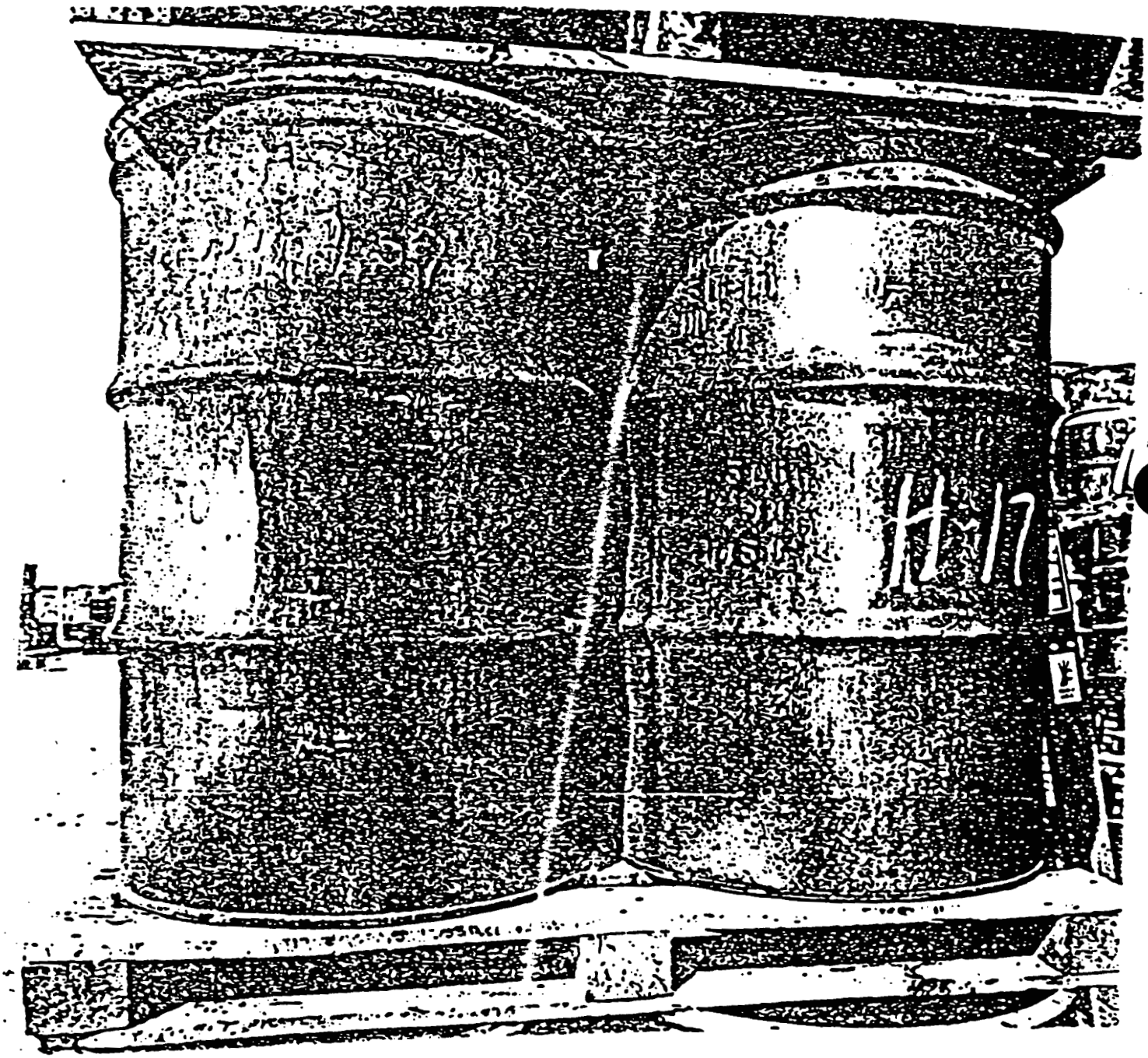

R PHOTOGRAPH OF DRUM CORROSION-CATEGORY B
R Figure 9

R - MATERIAL REVISED, ADDED, OR DELETED.

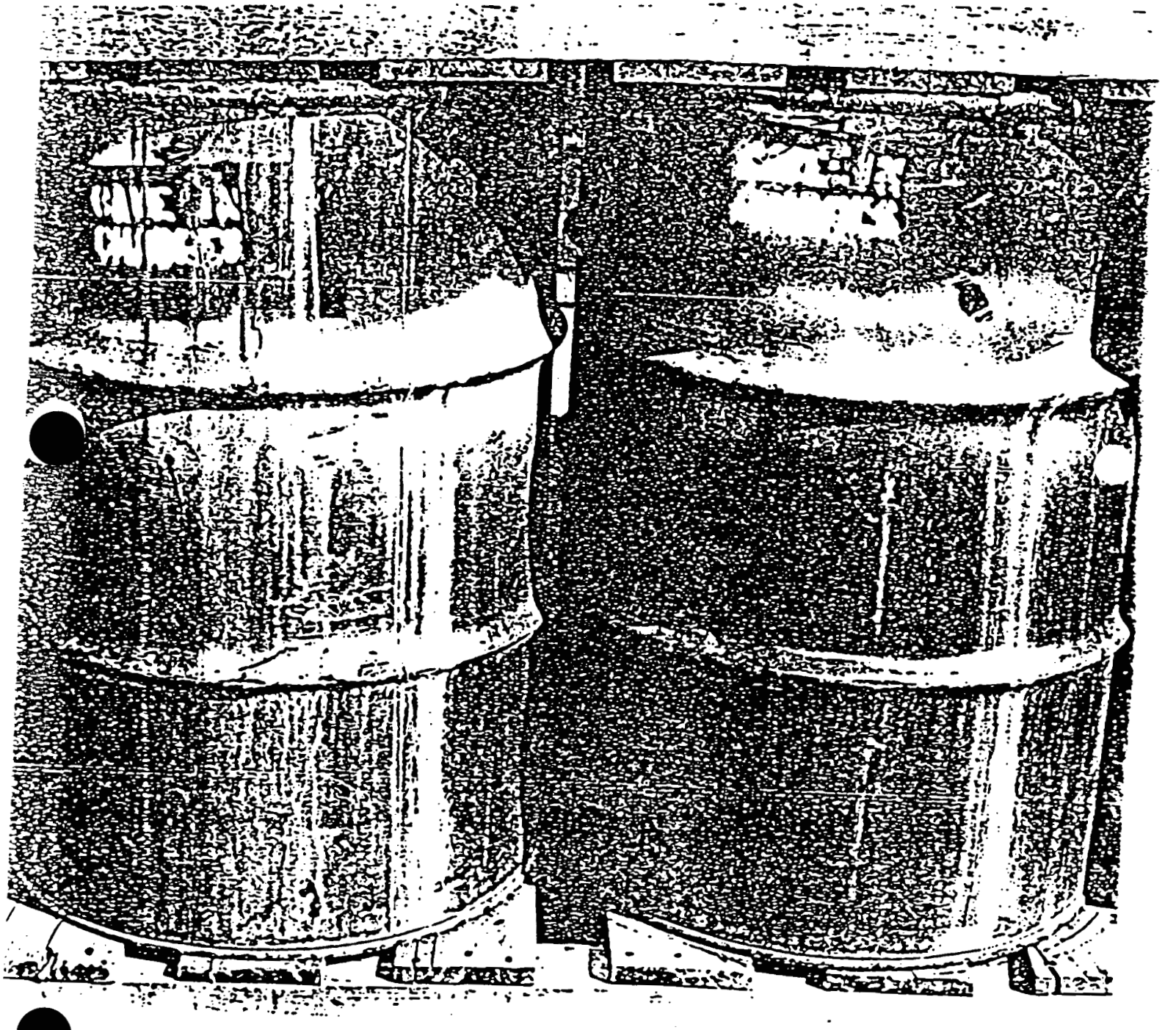

R PHOTOGRAPH OF DRUM CORROSION-CATEGORY C
R Figure 10

R - MATERIAL REVISED, ADDED, OR DELETED.

RECORD OF ISSUE/REVISIONS

DATE	REV.NO	DESCRIPTION AND AUTHORITY
07-07-87	N/A	Procedure requirement for packaging waste for off-site disposal per Request No. P87-151, initiated by K. J. Dunbar.
12-21-87	N/A	Revised procedure to incorporate audit recommendations per Request No. P87-229, initiated by J. E. Harmon.
07-25-88	N/A	Revised to incorporate CIOs C88-077, C88-081, and C88-097 thru C88-101, per Request Nos. P88-148, P88-162, P88-171, P88-172, P88-173, P88-174 and P88-175, initiated by K. J. Dunbar.
10-11-88	N/A	Reissued to incorporate CIO Nos. C88-067 (P88-140) and C88-068 (P88-141) and update to reflect current operating requirements per Request No. P88-189, initiated by K. J. Dunbar.
04-04-89	N/A	Added Step 7.5.8.1 and NOTE following 7.10.8 per Request P89-059, initiated by K. Dunbar.
10-20-89	N/A	Revised to incorporate CIO Nos. C89-020 (P89-306), C89-021 (P89-306), C89-021 (P89-307), C89-022 (P89-308), C89-056 (P89-310).
07-12-90	0	Reissued to update procedure per Request No. P89-433, initiated by K. A. Lawson. Revision program changed from "Page Revision Date" to "Revision No."
03-28-91	1	Revised to incorporate CIO Nos. C90-084 and C90-083 per Request Nos. P90-393 and P90-388.

R - MATERIAL REVISED, ADDED, OR DELETED.

1.0 PURPOSE

The purpose of this procedure is to provide the requirements for establishing and maintaining a Satellite Accumulation Area (SAA) and container, accumulating hazardous waste, and preparing a full accumulation container for transfer to storage.

2.0 APPLICABILITY

This procedure applies to any area generating hazardous waste requiring the establishment of a new SAA and controlling established SAAs (exception being SAAs in the Analytical Laboratories which may be controlled per AnL-01-0053).

3.0 RESPONSIBILITIES

3.1 The supervisor responsible for each waste generation area/Satellite Accumulation Area shall be responsible for the following:

3.1.1 Determining a SAA is required and establishing a SAA as determined from the results of a material evaluation.

3.1.2 Coordinating and notifying support organizations of assistance required per this procedure.

3.1.3 Coordinating the filling of accumulation containers and ensuring only authorized personnel access the areas and make additions of hazardous waste to the accumulation containers.

3.1.4 Obtaining accumulation containers as designated by the completed material evaluation.

3.1.5 Ensuring applicable documentation, signs, and labels are located in the SAA and the required documentation is completed, signed, and transferred with the drum to storage per this SOP.

3.1.6 Ensuring weekly (within seven calendar days) SAA inspections are performed per this procedure.

3.1.7 Ensuring labeling of accumulated waste is in accordance with the FMPC Lot Marking and Color-Coding System, Reactivity Group Code (RGC) system, and DOT standards.

3.1.8 Ensuring no incompatible materials are accumulated in adjacent accumulation containers within a SAA in accordance with the RGC system.

3.1.9 Supplying necessary tools.

R - MATERIAL REVISED, ADDED, OR DELETED.

3.0 RESPONSIBILITIES (cont.)

3.1.10 Contacting Industrial Hygiene or Radiological Safety to determine the appropriate respiratory protection.

3.1.11 Providing SAA generators/handlers with the required respiratory protection.

3.1.12 Ensuring lever lock rings are replaced with bolt lock rings on accumulation containers declared full prior to movement from the SAA.

3.1.13 Maintaining a list of personnel authorized to perform this procedure.

3.1.14 Initiating a material evaluation as required.

3.2 **SAA Generators** and handlers of hazardous waste shall be responsible for complying with this procedure and reporting any unusual condition to the supervisor, or in the supervisor's absence, the Assistant Emergency Duty Officer (AEDO).

3.3 **Solid Waste Compliance** shall be responsible for the following:

3.3.1 Performing hazardous waste determinations for FMPC materials.

3.3.2 Supplying EPA Waste Identification Numbers to categorize FMPC waste streams determined as RCRA.

3.3.3 Ensuring applicable regulatory requirements, including those defined by the EPA, Department of Energy, Department of Transportation, and the FMPC are incorporated in this procedure and are followed at the FMPC.

3.3.4 Providing analytical data and waste stream process knowledge to Waste Technology for determining RGC(s).

3.3.5 Assisting in the designation and establishment of an SAA.

R 3.3.6 Maintaining a current list of SAAs.

3.4 **Waste Technology** shall be responsible for the following:

3.4.1 Providing training material and support to personnel as required.

3.4.2 Providing the supervisor of the SAA with the appropriate RGC(s), based on material evaluation data.

3.4.3 Specifying an accumulation container for the waste to be accumulated and stored based on the results of the material evaluation.

R - MATERIAL REVISED, ADDED, OR DELETED.

3.0 RESPONSIBILITIES (cont.)

3.5 **Industrial Truck Operator/Motor Vehicle Operator (ITO/MVO)** shall be responsible for:

3.5.1 Obtaining an accumulation container as specified by Waste Technology in accordance with DOT regulations.

3.5.2 Transporting approved empty containers to the SAA supervisor.

3.5.3 Transporting full accumulation containers from SAAs to RCRA Storage Facilities.

3.6 **Materials Control and Accountability** shall be responsible for the following:

3.6.1 Assigning the three digit identification number for the SAA.

3.6.2 Preparing and maintaining nuclear material transfer records when drums are filled.

3.6.3 Verifying drum identification in accordance with material evaluation results.

3.6.4 Designating storage area destination of an accumulation container declared full with assistance from Waste Management.

3.7 **Centralized Training** shall be responsible for supporting SAA supervisors in developing a list of personnel authorized to perform this procedure and establishing training requirements.

3.8 **The Quality Department** shall be responsible for performing an independent oversight check on accumulation containers to ensure compliance with this procedure prior to transferring any material to storage.

3.9 **IRS&T** and the **Facility Owner** shall be responsible for approving the SAA location.

R 3.10 DELETED

4.0 DEFINITIONS

4.1 SAA Generator - A person authorized to deposit hazardous waste in an accumulation drum/container.

R - MATERIAL REVISED, ADDED, OR DELETED.

4.0 DEFINITIONS (cont.)

4.2 Hazardous Waste - A discarded material listed in the Environmental Protection Agency Hazardous Waste List which exhibits any of the following four characteristics: ignitability, corrosivity, reactivity or TCLP toxicity. Both "listed" and "characteristic" wastes are regulated under RCRA.

4.3 Resource Conservation and Recovery Act (RCRA) - The Congressional Act which established safe and environmentally acceptable management practices for specific wastes. RCRA requires strict "cradle to grave" control and proper management of hazardous waste.

4.4 Accumulation Container - A container, usually a drum, that is approved by Waste Technology and Transportation to be compatible with the waste to be accumulated.

4.5 Satellite Accumulation Area (SAA) - An area approved for hazardous waste accumulation at or near the waste generation point under control of the supervisor managing the operation generating waste.

4.6 Mixed Waste - Waste containing both radioactive and hazardous components.

4.7 Ignitable - RCRA term referring to liquid wastes with closed-cup flash points <60°C (140°F), or non-liquid wastes capable of causing fire through friction, absorption of moisture, or spontaneous chemical changes.

4.8 Corrosive - RCRA term referring to aqueous wastes with a pH $\leq$ 2 or $\geq$ 12.5.

4.9 Reactive - A RCRA term referring to wastes which exhibit properties such as reacting violently, forming potentially explosive mixtures or generating toxic gases with water, generating toxic gases (cyanide or sulfide) at pH between 2 and 12.5, or detonating or exploding at standard temperature and pressure or when heated under confinement.

4.10 Toxicity Characteristic Leaching Procedure (TCLP) - A RCRA term referring to wastes, the extracts from which contain the contaminants listed in Table 1 of 40 CFR 261.24, at a concentration equal or greater than the respective value given in that table.

4.11 EPA Identification Number (EPA ID. No.) - The twelve (12) digit code assigned to the FMPC as a generator and storage facility of hazardous waste (OH6890008976).

R - MATERIAL REVISED, ADDED, OR DELETED.

4.0 DEFINITIONS (cont.)

4.12 EPA Waste Identification Number (EPA WASTE NO.) - The four (4) digit alpha- numeric code that categorizes a hazardous waste and is specific for the waste in a particular container.

4.13 Spill Accumulation Container (SAC) - Portable polyethylene container designed to hold one 55 gallon drum of material to contain possible leaks. All accumulation containers shall stand in SACs.

4.14 FMPC Lot Marking and Color Coding System - A system which assigns 15 digit alpha-numeric codes and a color code to identify nuclear materials ensuring complete separation of depleted, normal, and enriched uranium or thorium materials.

4.15 Three Day Rule - A RCRA regulation requiring transfer of all containers in an accumulation area not to exceed the 55 gallon limit (one container per waste stream) to an approved storage facility within three days from the date the container is declared full per a signed, dated, and time recorded Hazardous Waste Disposal Record.

4.16 Reactivity Group Code System - An identification system for hazardous waste designed to ensure that no incompatible materials are accumulated or stored adjacently.

4.17 Spill - Any unplanned event involving spilling, leaking, pumping, pouring, injecting, escaping, emitting, emptying, leaching, releasing, dumping, discharging, or disposing of hazardous waste onto the ground, into water, or into the air, within or beyond the boundaries of the FMPC.

4.18 D.O.T. Proper Shipping Name - The name of a hazardous material as specified in the D.O.T. Regulations 49 CFR 172.101

4.19 D.O.T. UN or NA NUMBER - D.O.T. identification number prefixes for hazardous materials as specified in the D.O.T. Regulations 49 CFR 172.101 and 172.102. "UN" denotes materials recognized for international and domestic shipments. "NA" denotes materials recognized for domestic shipments and shipments to and from Canada, but not for other international shipments.

4.20 Authorized Personnel - Individuals who have successfully completed all the training requirements to perform work related to a SAA.

5.0 REFERENCES

5.1 PO-S-06-001, "Movement of Hazardous Waste"

R - MATERIAL REVISED, ADDED, OR DELETED.

5.0 REFERENCES (cont.)

5.2 SOP 20-C-606, "Hazardous Material Spill Cleanup"

5.3 AnL-01-0053, "Managing Hazardous Waste Satellite Accumulation Areas in Analytical Laboratories"

6.0 INDUSTRIAL HEALTH AND SAFETY REQUIREMENTS

6.1 A defined safety system is not involved.

6.2 Safety glasses shall be worn unless other eye protection is specified by IRS&T. Goggles or face shields shall be worn when handling caustic, acids, or any other chemical which could cause immediate skin damage upon contact.

6.3 Respiratory protection provided by the supervisor shall be worn when required.

6.4 Leather-palm gloves shall be worn when handling drums, operating equipment, and when handling rough, sharp-edged, or contaminated waste.

6.5 Neoprene rubber gloves shall be worn when handling hazardous chemical wastes where skin contact is possible.

6.6 A rubber apron shall be worn when handling caustic, acids, or any other chemical which could cause immediate skin damage upon contact.

6.7 HEPA type filter vacuum cleaners or a vacuum system approved by the IRS&T Department with a current DOP test label properly affixed to vacuum shall be used for spill cleanup.

6.8 Drums containing dry cell batteries shall be vented by placing a minimum of two 1/4" holes approximately one inch below the lid of the drum.

6.9 Any circumstance which may have resulted in an intake of radioactive materials by inhalation, ingestion or absorption shall immediately be reported to a supervisor. The supervisor shall immediately report the circumstance of possible radioactive materials intake to Radiological Safety for evaluation. The involved personnel shall report to the urinalysis sampling station of Dosimetry at the end of the shift during which the incident occurred, or as otherwise directed, to submit a urine sample. The involved personnel must again report at the start of their next shift to submit another urine sample.

6.10 Any release of hazardous waste shall be reported immediately per SOP 20-C-606.

R - MATERIAL REVISED, ADDED, OR DELETED.

7.0 PROCEDURE

7.1 Establishing Satellite Accumulation Area

NOTE: Item 7.1 shall be completed by the supervisor or facility owner of the waste generation area.

7.1.1 Determine the location of the SAA.

NOTE: The SAA must be located at or near the point of generation of the waste.

7.1.2 Contact IRS&T and Solid Waste Compliance (SWC) for verification that the SAA requirements, protective equipment, and location are in compliance with regulatory requirements.

7.1.3 When verification is received from IRS&T and SWC, contact Materials Control and Accountability for assignment of a unique identification number to the SAA.

NOTE: This number shall be used on applicable forms to identify location.

R 7.1.4 Notify SWC to update the SAA Data List with information on the establishment of the new SAA.

7.1.5 Identify and setup the SAA per Figure 1.

7.1.6 Notify ITO/MVO to deliver an accumulation container for the waste to be accumulated and stored per a completed material evaluation.

7.2 Identification of Accumulation Drum

WARNING: ONLY AUTHORIZED PERSONNEL SHALL HANDLE HAZARDOUS WASTE.

CAUTION: EACH SAA SHALL CONTAIN ONLY ONE APPROVED CONTAINER AND SAC PER HAZARDOUS WASTE STREAM. MORE THAN ONE WASTE STREAM MAY BE ACCUMULATED IN AN SAA.

NOTE: The identification of the accumulation drum shall be placed or marked in relation to the drum side seam as shown in Figure 5. The drum labeling arrangement in Figure 5 is effective 11-16-90. Drums
R labeled prior to 11-16-90 shall not require relabeling.

NOTE: Information stencilled on an accumulation container shall be 1-1/2 to 2 inches in height.

R - MATERIAL REVISED, ADDED, OR DELETED.

7.0 PROCEDURE (cont.)

7.2.1 Ensure the drum and SAC for accumulating waste are free of damage and clean and free of debris prior to use in the SAA.

7.2.2 Stencil the FMPC Lot Marking Code on the side of the drum for the "P.O. No., Source, Material Class, and Material Type" per Figure 5.

NOTE: The sequence number is recorded when the drum is declared full.

NOTE: The FMPC Lot Marking Code shall be determined by using the FMPC Lot Marking and Color-Coding System book or contacting the Materials Control and Accountability Department.

7.2.3 Ensure the scale to be used has been tested per the applicable scale SOP.

7.2.4 Tare weigh the accumulation drum and the SAC separately.

7.2.5 Stencil the tare weight on the side of the accumulation drum and SAC per Figure 5.

7.2.6 Stencil the Reactivity Group Code (RGC), as specified by Waste Technology, on the drum.

7.2.7 Affix a clear, weather-resistant, self-adhesive envelope to the lid of the drum.

NOTE: The envelope on the lid will be used during the accumulation and transportation of the drum.

7.2.8 Insert a "Hazardous Waste Disposal Record" (Figure 2), completing the SAA number, waste material type, and the DOT Proper Shipping Name, into the envelope on the lid of the drum.

7.2.9 Fill out an "Item Production/Certification/Identification", 65 Card (Figure 3) per items 7.2.9.1 through 7.2.9.5.

7.2.9.1 Record the FMPC Lot Marking Code in the areas titled "P.O. No.," "Source," "Material Class," and "Material Type".

NOTE: The "Sequence Number" is recorded when the drum is declared full.

7.2.9.2 Record a general description of the waste in the area titled "Waste Description and Comments".

7.0 PROCEDURE (cont.)

7.2.9.3 Record the type of container in the area titled "Package Type".

7.2.9.4 Record the size or volume of the container in the area titled "Package Size".

7.2.9.5 Complete all the required package checks of the container in the section titled "Package Physical Certification".

NOTE: Other information shall be added to the card when the container is declared full (Refer to Item 7.6).

7.2.10 Insert the "Item Production/Certification/Identification Card" 65 Card (Figure 3) into the envelope on the lid of the drum.

7.2.11 If the "Hazardous Waste Marking" label (see Figure 5) is not preprinted, use a black waterproof permanent marker and fill in the following information:

7.2.11.1 Record the "Name, Address, City, State, and Zip." as follows:

DOE/FMPC
7400 Willey Rd.
Fernald, OH 45030

7.2.11.2 Record the "EPA Identification Number".

NOTE: The EPA Identification Number is "OH6890008976."

7.2.11.3 Record the "DOT Proper Shipping Name".

NOTE: Transportation Regulatory Compliance shall provide this information.

7.2.11.4 Record the "EPA Waste Number".

7.2.11.5 Record the "Phone Number" as (513)738-6200.

7.2.11.6 Identify either UN or NA and record the appropriate UN or NA Number.

7.2.12 Affix the "Hazardous Waste Marking" label and appropriate DOT Marking and/ or DOT label on the drum.

NOTE: No other information is required on the "Hazardous Waste Marking" until the container is declared full.

R - MATERIAL REVISED, ADDED, OR DELETED.

7.0 PROCEDURE (cont.)

7.2.13 Inspect the container to ensure the stenciling, marking, and labeling has been placed correctly on the drum (See Figure 5).

7.3 Place a SAC into Satellite Accumulation Area ensuring tare weight is visible.

7.4 Place the accumulation drum into the SAC with the drum seam facing the front of the SAA.

7.5 Accumulating Hazardous Waste

7.5.1 Place waste into the accumulation drum which is specifically designated to receive that waste type.

WARNING: NEVER MIX WASTE MATERIAL TYPES.

7.5.2 Visually check the volume in the accumulation drum containing waste.

NOTE: Full drum capacity for solid material is approximately three inches from the top of the drum. Waste Technology shall specify full drum capacity for liquid material.

7.5.2.1 If the drum has adequate capacity, carefully add the waste to the accumulation drum.

7.5.2.2 If the drum does not have adequate capacity, proceed to 7.6.

7.5.3 Secure the lid or bung on to the drum once the additions are complete.

CAUTION: KEEP THE CONTAINER OF HAZARDOUS WASTE CLOSED AT ALL TIMES EXCEPT WHILE ADDING, INSPECTING, OR SAMPLING THE WASTE.

NOTE: A lever lock ring may be used on drums while located in the SAA. Bolt type rings are required when transporting and storing drums that contain hazardous waste.

NOTE: If a lever lock ring is used during accumulation, the supervisor of the SAA shall ensure that the lever lock is replaced with a bolt lock after the drum is declared full and before the drum is moved from the SAA.

7.0 PROCEDURE (cont.)

7.5.4 Record additions of waste material to the accumulation drum on the "Hazardous Waste Disposal Record," Form No. FMPC-PRO-3064 (See Figure 2) by completing steps 7.5.4.1 thru 7.5.4.4.

NOTE: If conditions exist which are not defined by this procedure or anything unusual is noticed, note in comment column of Form FMPC-PRO-3064 and notify supervisor immediately.

7.5.4.1 Remove the "Hazardous Waste Disposal Record" (Figure 2) from the plastic envelope attached to the accumulation area collection drum lid.

7.5.4.2 Record the date of the waste addition in the appropriate column.

7.5.4.3 Record badge number in the column labeled "Operator's Badge Number."

7.5.4.4 Return the "Hazardous Waste Disposal Record" to the plastic envelope on the drum lid.

7.6 Preparing Full Hazardous Waste Container for Transfer to Storage

7.6.1 Visually check the volume in the accumulation drum. When the material is approximately 3 inches from the top of drum, complete steps 7.6.2 through 7.6.18 immediately.

WARNING: IF THE TRANSFER OF THE CONTAINER IS NOT PROCESSED WITHIN THREE DAYS, A DCAR MUST BE COMPLETED.

NOTE: Maximum weight per 55 gallon drum is 1,200 pounds gross.

R - MATERIAL REVISED, ADDED, OR DELETED.

7.0 PROCEDURE (cont.)

7.6.2 Notify supervisor of Satellite Accumulation Area to verify the drum is full.

CAUTION: **A DRUM/CONTAINER DECLARED FULL MUST BE TRANSFERRED TO AN APPROVED RCRA STORAGE AREA WITHIN THREE CALENDAR DAYS.**

NOTE: Supervisor shall check the "Hazardous Waste Disposal Record", Form FMPC-PRO-3064 (Figure 2), to ensure only authorized personnel made additions to the drum, only specified waste was disposed of in the drum.

NOTE: The supervisor shall record the date and time the drum is at full capacity, and sign on "Hazardous Waste Disposal Record" which declares the drum full.

7.6.3 As applicable, install a lid and bolt-type lock ring on an open head drum, or install a threaded bung plug on a bung head drum, and secure as follows:

7.6.3.1 Check gasket placement and condition of drum lid (for open head drums). Replace damaged gaskets.

7.6.3.2 Seat lid evenly on open head drum or screw bung plug into bung hole tightly and evenly using a bung wrench.

7.6.3.3 Place locking bolt ring on lid of open head drum ensuring the flanges point downward from lock ring (See Figure 8).

NOTE: Locking bolt shall be positioned no more than six inches from the seam of the drum.

7.6.3.4 Install locking bolt shaft through unthreaded flange, locking nut, and then threaded flange (See Figure 8) so that the bolt head rests against unthreaded flange.

7.6.3.5 Torque bolt to 45 ft/lbs using breakaway torque wrench.

7.6.3.6 Manually tighten the locking nut against the threaded flange. Then using a wrench, tighten the nut against the flange an additional 1/4 turn.

7.6.4 If not previously completed, inspect the forklift to be used.

R - MATERIAL REVISED, ADDED, OR DELETED.

7.0 PROCEDURE (cont.)

7.6.5 Using forklift, move the SAC containing the full accumulation drum to scale for weighing.

NOTE: Supervisor shall specify the scale to be used and ensure the full accumulation drum is weighed prior to transferring the drum to an approved RCRA Storage Area.

7.6.6 If not previously completed, inspect the scale to be used.

NOTE: The scale shall be inspected and operated in accordance with the SOP applicable to the area.

7.6.7 Using the forklift, move the SAC containing the full accumulation drum on to the scale.

NOTE: Drum shall not to be removed from SAC.

7.6.8 Obtain the gross weight of the drum by subtracting the tare weight of the SAC (indicated on the side) from the weight indicated on the scale.

WARNING: MAXIMUM WEIGHT PER 55 GALLON DRUM IS 1,200 POUNDS GROSS.

7.6.9 If the drum is within the specified weight limit, proceed to Step 7.6.12.

7.6.10 If the drum is over the specified weight limit of 1,200 pounds gross, move the drum back to the SAA. Transfer the excess material to a new accumulation drum by completing steps 7.6.10.1 through 7.6.10.3.

7.6.10.1 Remove lock ring and lid or bung head from the drum.

7.6.10.2 Using scoop or approved removal device, remove material from the drum and place in an approved/compatible drum (in a SAC) in the SAA until the drum weight is within limits.

NOTE: The removed material may be either included in an unweighed, underfilled drum of the same lot, or transferred in a new drum of the same lot according to Section 7.2.

7.6.10.3 Install a lid and bolt-type lock ring on an open head drum, or install a threaded bung plug on a bung head drum, and secure by completing substeps 7.6.3.1 through 7.6.3.6.

R - MATERIAL REVISED, ADDED, OR DELETED.

7.0 PROCEDURE (cont.)

7.6.11 Using the forklift, move the SAC containing the accumulation drum on to the scale and complete steps 7.6.8 through 7.6.11.3 until the drum weight is within limits.

7.6.12 Remove the 65 card (Figure 3) from the envelope on drum and record gross weight, net weight, lot sequence number, and badge number. Insert card in envelope on drum.

7.6.13 Stencil the gross weight, net weight, lot sequence number, and drum number on the drum (See Figure 5).

NOTE: The generator shall sign the area provided for generator's signature on Form FMPC-CONT-1945-XX (65 Card). The supervisor (or appointed alternate) shall record the date and time the drum is declared full, sign the 65 card and obtain completed "NM Transfer Record/NM Receipt Record/Material Identification Record" (68/69 card) from the Nuclear Materials Reporting Specialist (NMR).

NOTE: SAA Supervisor/SAA Generator shall complete a "Hazardous Waste Container Pre-Transfer Checklist", Form FMPC-OPR-3133, Figure 9 (including the drum number and lot mark code).

NOTE: Once the transfer record (68/69 card) is completed, the supervisor of the SAA shall sign the area indicated for the shipper's signature.

NOTE: The NMR signs the "NM Transfer Record/NM Receipt Record/Material Identification Record" (68/69 card).

NOTE: An MC&A representative shall verify drum identification per the material evaluation.

7.6.14 Upon receipt of the signed forms, insert the completed "Item Production/Certification/Identification Card" 65 Card (Figure 3) and the "NM Transfer Record/NM Receipt Record/Material Identification Record" (68/69 Card, Figure 6) into the plastic envelope on the lid of the container.

7.0 PROCEDURE (cont.)

7.6.15 Complete the "Hazardous Waste Marking" label (Figure 5), using a black waterproof permanent marker to record the date that the container was declared full in the area titled "Accumulation Start Date."

NOTE: This date indicates when the container becomes a storage container and starting date for the "Three Day Rule."

NOTE: Do not write in the area titled "Manifest Document Number." This space shall be completed when the waste is shipped off site.

7.6.16 Insert completed "Hazardous Waste Container Pre-Transfer Checklist" (Figure 9) into plastic envelope.

7.6.17 Notify the supervisor that the drum and SAC are ready for transport to the storage area.

WARNING: THE THREE DAY RULE MUST BE FOLLOWED WHEN A CONTAINER IS READY FOR SHIPMENT TO STORAGE.

CAUTION: NO DRUM SHALL BE RELEASED TO ITO/MVO FOR TRANSFER TO STORAGE UNTIL APPROVAL HAS BEEN RECEIVED FROM QUALITY.

NOTE: Supervisor shall contact Quality to perform an independent check completing Quality Assurance Checklist, Form QAC-900326-1 (Figure 4) on the drums of hazardous waste to ensure compliance with this procedure. If any deficiencies are noted, the supervisor shall correct. This form shall be inserted into the plastic envelope on the lid of the container.

NOTE: Supervisor shall notify ITO/MVO and Waste Management that a drum of hazardous waste is ready for shipment to storage.

NOTE: ITO/MVO shall transport container per PO-S-06-001.

7.6.18 Notify the SAA supervisor a replacement drum and SAC are required.

NOTE: SAA Supervisor shall contact ITO/MVO for a replacement drum and SAC.

R - MATERIAL REVISED, ADDED, OR DELETED.

7.0 PROCEDURE (cont.)

7.7 Inspection of SAA

CAUTION: REPORT SPILLS OR UNSAFE CONDITION TO THE SUPERVISOR, OR IN THE SUPERVISOR'S ABSENCE, REPORT TO THE AEDO.

7.7.1 Inspect the SAA within seven calendar days of previous inspection and complete the "Hazardous Waste Satellite Accumulation Area Inspection Log," Form FMPC-OPR-3136 (See Figure 7).

7.7.1.1 If corrosion/rust is found during inspection, proceed per Table 1 prior to completing Item 9 of the form.

7.7.2 Transmit completed Form FMPC-OPR-3136 to supervisor of the SAA.

NOTE: Both the inspector and supervisor shall sign and record the date and time the inspection was performed.

NOTE: Supervisor shall correct deficiencies on Form FMPC-OPR-3136 found during inspection immediately.

8.0 APPLICABLE FORMS

8.1 FMPC-PRO-3064, "Hazardous Waste Disposal Record"

8.2 FMPC-CONT-1945-XX, "Item Production/Certification/Identification"

8.3 FMPC-AC-1990, "Nuclear Material Transfer Record, 68/69 Card"

8.4 FMPC-OPR-3136, "Hazardous Waste Satellite Accumulation Area Inspection Log"

8.5 QAC-900326-1, "Quality Assurance Checklist"

8.6 FMPC-OPR-3133, "Hazardous Waste Container Pre-Transfer Checklist"

R - MATERIAL REVISED, ADDED, OR DELETED.

TABLE 1
CORROSION INSPECTION CATEGORIES

CATEGORY	CHARACTERISTIC	COULD CAUSE LOSS OF DRUM INTEGRITY		CORRECTIVE ACTION
		YES	NO	
A	Severe corrosion with deep pitting and/or metal flaking	X		1. Notify supervisor. NOTE: The drum requires disposition as directed by supervision within 24 hours.
B	Corrosion with shallow pitting and/or mild metal flaking		X	1. Proceed as directed by the supervisor. NOTE: Disposition shall be determined by the supervisor following review of completed inspection forms.
C	Surface rust with no pitting and mild paint flaking which exposes bare metal		X	1. Proceed as directed by the supervisor. Repainting shall be scheduled by supervisor.

R - MATERIAL REVISED, ADDED, OR DELETED.

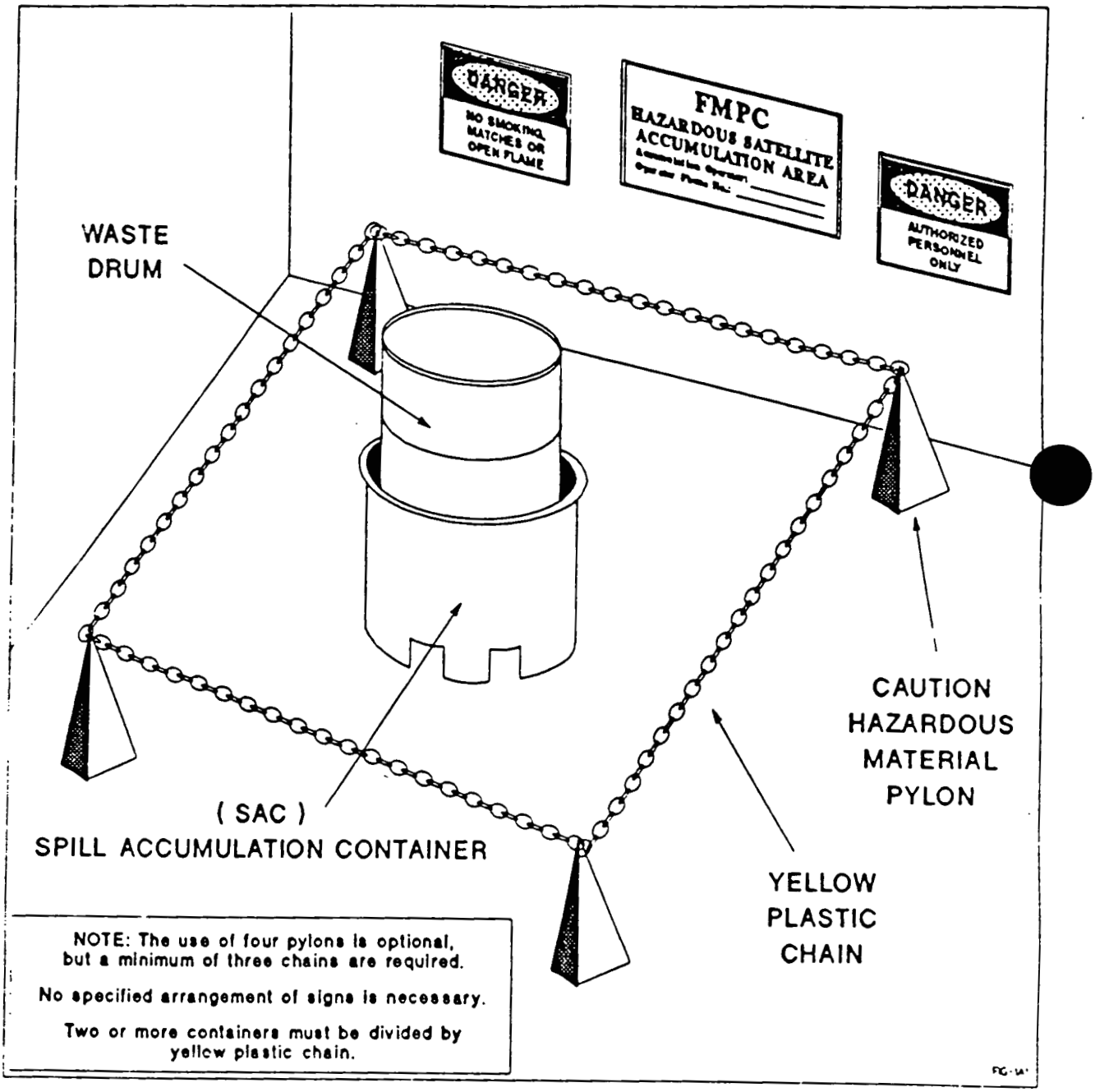

EXAMPLE OF SATELLITE ACCUMULATION AREA
Figure 1

R - MATERIAL REVISED, ADDED, OR DELETED.

FMPC
OPERATIONS DEPARTMENT
HAZARDOUS WASTE DISPOSAL RECORD

SATELLITE ACCUMULATION AREA NUMBER	DOT PROPER SHIPPING NAME	WASTE MATERIAL TYPE IN DRUM

Date	Operators Badge No.	Comments

Supervisor Signature: _____

Container Declared Full: _____ / _____
Date Time

FMPC-OPR-3064

HAZARDOUS WASTE DISPOSAL RECORD
Form FMPC-PRO-3064
Figure 2

R - MATERIAL REVISED, ADDED, OR DELETED.

CARD XX ITEM PRODUCTION/CERTIFICATION/IDENTIFICATION

P. O. NO.	SOURCE	CLASS	MATERIAL TYPE	LOT SEQUENCE NO.	DATE MO	DAY	YEAR	SHIFT	BADGE NO.	PACKAGE NO.

SEAL NUMBER	SEAL DATE MONTH	DAY	YEAR

WASTE DESCRIPTION AND COMMENTS

PACKAGE TYPE
PACKAGE SIZE

PACKAGE PHYSICAL CERTIFICATION	YES	NO
EMPTY CONTAINER AT START		
RUST HOLES OR DENTS		
MATERIAL IS AS CODED		
PROHIBITED MATERIALS		
LIQUIDS IN CONTAINER		
MINIMUM OF VOID SPACE		
PACKAGE SECURED		
DRAIN PLUG SECURED		

PLANT
PROC BBA
PLANT TO
BBA TO

GROSS WEIGHT
TARE WEIGHT
NET WEIGHT

GENERATOR SIGNATURE
SUPERVISOR SIGNATURE DATE
FMPC-CONT-1945-XX (REV 12-15-90)

CARD 65 ITEM PRODUCTION/CERTIFICATION/IDENTIFICATION

P. O. NO.	SOURCE	CLASS	MATERIAL TYPE	LOT SEQUENCE NO.	DATE MO	DAY	YEAR	SHIFT	BADGE NO.	PACKAGE NO

SEAL NUMBER	SEAL DATE MONTH	DAY	YEAR

WASTE DESCRIPTION AND COMMENTS

PACKAGE TYPE
PACKAGE SIZE

PACKAGE PHYSICAL CERTIFICATION	YES	NO
EMPTY CONTAINER AT START		
RUST HOLES OR DENTS		
MATERIAL IS AS CODED		
PROHIBITED MATERIALS		
LIQUIDS IN CONTAINER		
MINIMUM OF VOID SPACE		
PACKAGE SECURED		
DRAIN PLUG SECURED		

PLANT
PROC BBA
PLANT TO
BBA TO

GROSS WEIGHT
TARE WEIGHT
NET WEIGHT

GENERATOR SIGNATURE
SUPERVISOR SIGNATURE DATE
FMPC-CONT-1945-XX (REV 12-15-90)

CARD 66 ITEM PRODUCTION/CERTIFICATION/IDENTIFICATION

P. O. NO.	SOURCE	CLASS	MATERIAL TYPE	LOT SEQUENCE NO.	DATE MO	DAY	YEAR	SHIFT	BADGE NO.	PACKAGE NO.

SEAL NUMBER	SEAL DATE MONTH	DAY	YEAR

WASTE DESCRIPTION AND COMMENTS

PACKAGE TYPE
PACKAGE SIZE

PACKAGE PHYSICAL CERTIFICATION	YES	NO
EMPTY CONTAINER AT START		
RUST HOLES OR DENTS		
MATERIAL IS AS CODED		
PROHIBITED MATERIALS		
LIQUIDS IN CONTAINER		
MINIMUM OF VOID SPACE		
PACKAGE SECURED		
DRAIN PLUG SECURED		

PLANT
PROC BBA
PLANT TO
BBA TO

GROSS WEIGHT
TARE WEIGHT
NET WEIGHT

GENERATOR SIGNATURE
SUPERVISOR SIGNATURE DATE
FMPC-CONT-1945-XX (REV 12-15-90)

ITEM PRODUCTION/CERTIFICATION/IDENTIFICATION (65 Card)
FORM NO. FMPC-CONT-1945-XX
Figure 3

R - MATERIAL REVISED, ADDED, OR DELETED.

ACCUMULATION AREA READY TO SHIP CHECKLIST

Date _____ Location _____ Accum. Area _____
Non-Accum. Area _____

FMPC Lot Mark Code _____ RCRA Characterization Sheet No. _____

Drum Number _____

	Accept	Reject	Comments
1. Label Arrangement per 20-C-605	____	____	_____
2. FMPC Lot Mark Code	____	____	_____
3. Reactivity Codes	____	____	_____
4. Drum Number	____	____	_____
5. Gross, Tare, Weights	____	____	_____
6. Closure Type (Bung/Bolt)	____	____	_____
7. Bolt Centered with Seam (± 6 inches)	____	____	_____
8. Drum Condition (Rust/Dents/Bulges/Holes)	____	____	_____
9. Dent greater that 1/4" deep in ring seal	____	____	_____
10. W-65 Card Complete in envelope	____	____	_____
11. 68/69 Card complete in envelope	____	____	_____
12. Hazardous Waste Disposal Record Complete in envelope	____	____	_____
13. Pre Transfer Check List complete and in envelope	____	____	_____
14. Drum containing liquids in SAC	____	____	_____
15. Drum appropriately sealed for transport	____	____	_____
Hazardous Waste Label 16. Generator Name/Address	____	____	_____
17. EPA ID No. (OH6890008976)	____	____	_____
18. EPA Waste No.	____	____	_____
19. UN or NA plus 4 Digits	____	____	_____
20. DOT Shipping Name	____	____	_____
21. Accumulation Start Date	____	____	_____
22. Water Proof Ink used	____	____	_____
23. DOT Label present	____	____	_____
24. Pallet is sturdy and clean	____	____	_____

ACCEPTABLE FOR TRANSFER TO STORAGE _____
QAC-900326-1, Rev. 3-(11/16/90) (SQE Personnel Signature)

QUALITY ASSURANCE CHECKLIST
Form QAC-900326-1
Figure 4

R - MATERIAL REVISED, ADDED, OR DELETED.

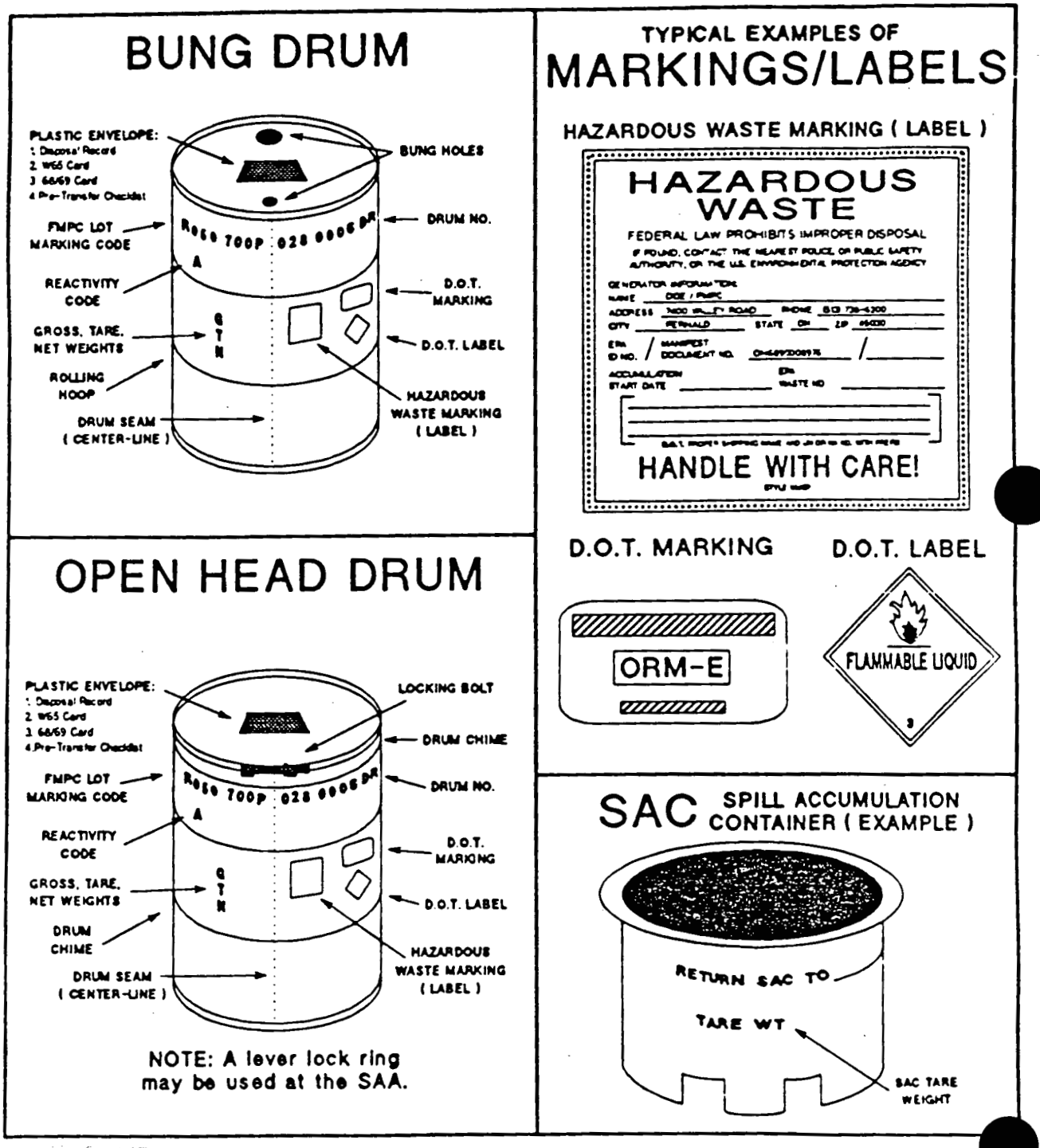

EXAMPLE OF RCRA WASTE DRUM LABELING
Figure 5

R - MATERIAL REVISED, ADDED, OR DELETED.

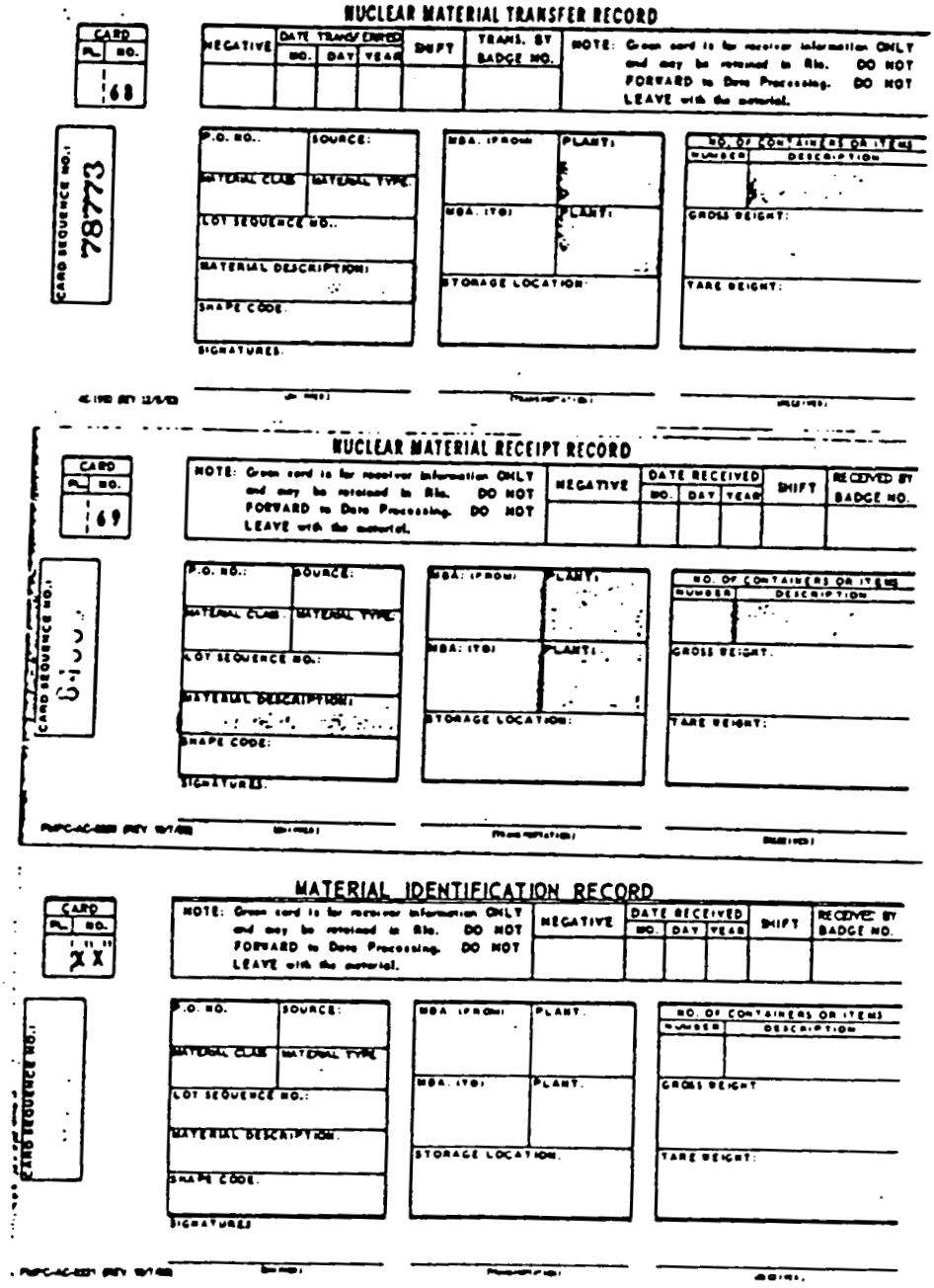

NUCLEAR MATERIAL TRANSFER RECORD

CARD PL	CARD NO.	NEGATIVE	DATE TRANSFERRED MO.	DAY	YEAR	SHIFT	TRANS. BY BADGE NO.	NOTE: Green card is for receiver information ONLY and may be retained in file. DO NOT FORWARD to Data Processing. DO NOT LEAVE with the material.
	68							

CARD SEQUENCE NO.: 78773

P.O. NO.:	SOURCE:	MBA: (FROM)	PLANT:	NO. OF CONTAINERS OR ITEMS: NUMBER	DESCRIPTION
MATERIAL CLASS	MATERIAL TYPE	MBA: (TO)	PLANT:	GROSS WEIGHT:	
LOT SEQUENCE NO.:		STORAGE LOCATION:		TARE WEIGHT:	
MATERIAL DESCRIPTION:					
SHAPE CODE:					

SIGNATURES:

NUCLEAR MATERIAL RECEIPT RECORD

CARD PL	CARD NO.	NOTE: Green card is for receiver information ONLY and may be retained in file. DO NOT FORWARD to Data Processing. DO NOT LEAVE with the material.	NEGATIVE	DATE RECEIVED MO.	DAY	YEAR	SHIFT	RECEIVED BY BADGE NO.
	69							

CARD SEQUENCE NO.: 0-1-0-0

P.O. NO.:	SOURCE:	MBA: (FROM)	PLANT:	NO. OF CONTAINERS OR ITEMS: NUMBER	DESCRIPTION
MATERIAL CLASS	MATERIAL TYPE	MBA: (TO)	PLANT:	GROSS WEIGHT:	
LOT SEQUENCE NO.:		STORAGE LOCATION:		TARE WEIGHT:	
MATERIAL DESCRIPTION:					
SHAPE CODE:					

SIGNATURES:

MATERIAL IDENTIFICATION RECORD

CARD PL	CARD NO.	NOTE: Green card is for receiver information ONLY and may be retained in file. DO NOT FORWARD to Data Processing. DO NOT LEAVE with the material.	NEGATIVE	DATE RECEIVED MO.	DAY	YEAR	SHIFT	RECEIVED BY BADGE NO.
	XX							

CARD SEQUENCE NO.:

P.O. NO.	SOURCE:	MBA (FROM)	PLANT	NO. OF CONTAINERS OR ITEMS: NUMBER	DESCRIPTION
MATERIAL CLASS	MATERIAL TYPE	MBA: (TO)	PLANT	GROSS WEIGHT	
LOT SEQUENCE NO.:		STORAGE LOCATION		TARE WEIGHT:	
MATERIAL DESCRIPTION					
SHAPE CODE					

SIGNATURES

NUCLEAR MATERIAL TRANSFER RECORD
Form FMPC-AC-1990
Figure 6

R - MATERIAL REVISED, ADDED, OR DELETED.

FMPC
HAZARDOUS WASTE SATELLITE ACCUMULATION AREA INSPECTION LOG

ACCUMULATION AREA:	LOCATION:	DATE:	TIME:

ITEM NO	INSPECTION ITEM	ACCEPTABLE YES	ACCEPTABLE NO	CORRECTIVE ACTION & DATE CORRECTED
1	"Danger—No Smoking Matches or Open Flame" sign posted			
2	"Danger—Authorized Personnel Only" sign posted			
3	"FMPC Hazardous Waste Satellite Accumulation Area" sign posted			
4	SAA floor free of spilled/leaked waste			
5	SAA identified and accessible			
6	SAC container free of spilled/leaked waste			
7	SAC container exterior clean			
8	Container compatible with waste accumulated			
9	Drum Exterior—no dents, chipped paint, rust			
10	Drum Condition—no leakage particularly at seams			
11	FMPC Lot Marking complete stenciled and located on the upper third of the drum side			
12	SAC Container Tare Weight Marking complete Stenciled and located properly			
13	Form FMPC-OPR-3064 initiated inside envelope located on top of drum			
14	Form FMPC-CONT-1945-XX initiated with Lot No Container Type and Size recorded			
15	Form FMPC-CONT-1945-XX inside envelope			
16	"Hazardous Waste Label" complete and affixed to drum, middle right side of drum seam			
17	Lid secure on drum (Lock ring on drum, Lid down on funnel)			
18	*Container waste level (3" from the top is full)			
19	Ensure spill control equipment is available at SAA			

* *Record the approximate waste level of container in the "COMMENTS" section.*

COMMENTS: _____

INSPECTOR'S SIGNATURE	DATE	SUPERVISOR'S SIGNATURE	DATE

FMPC-OPR-3136 (REV. 11-15-90)

HAZARDOUS WASTE SATELLITE ACCUMULATION AREA INSPECTION LOG
FMPC-OPR-3136
Figure 7

R - MATERIAL REVISED, ADDED, OR DELETED.

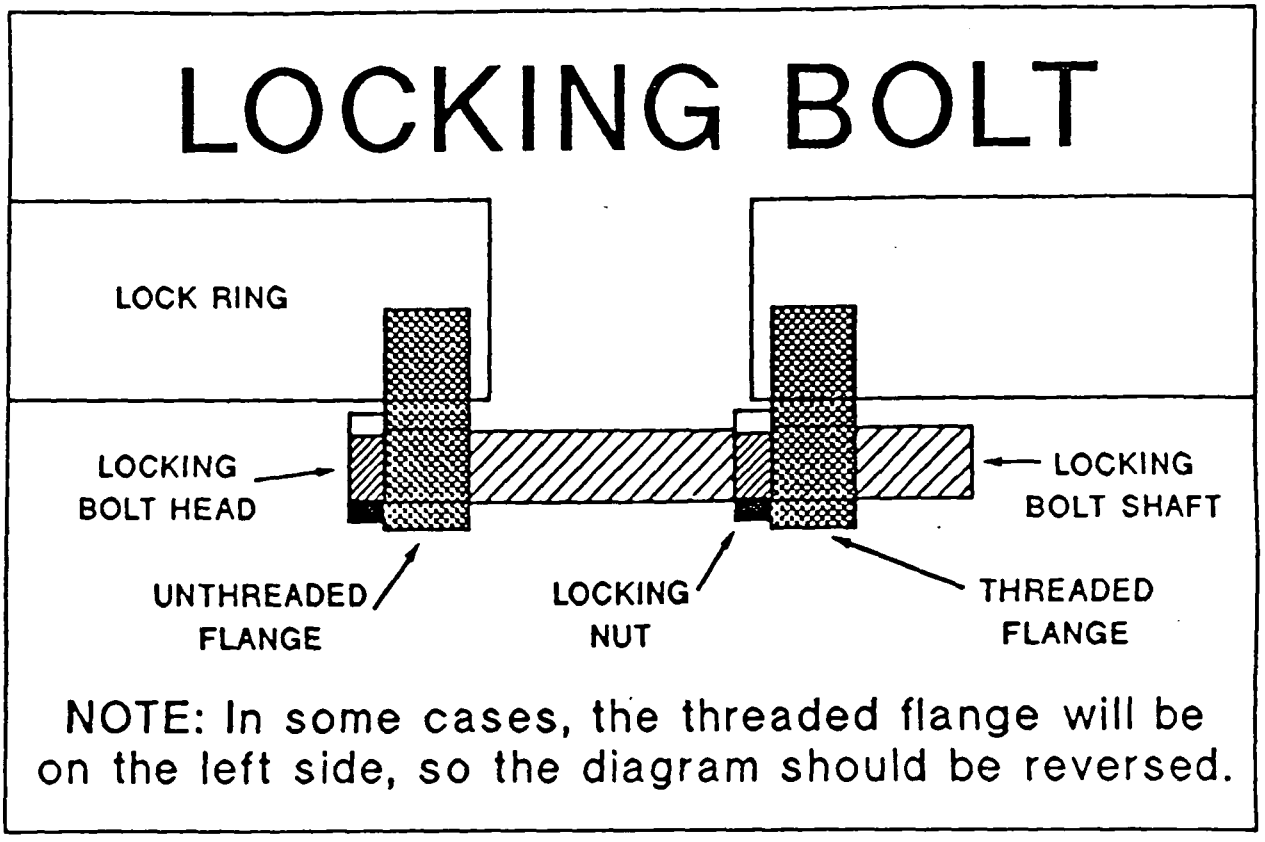

INSTALLATION OF BOLT-TYPE LOCKING RING
Figure 8

R - MATERIAL REVISED, ADDED, OR DELETED.

FMPC HAZARDOUS WASTE CONTAINER PRE-TRANSFER CHECK LIST

INSPECTOR NAME: | INSPECTOR BADGE NO.:

SAC CONTAINER AREA: | LOCATION: | DATE: | TIME:

ITEM NO.	INSPECTION ITEM	ACCEPTABLE YES	ACCEPTABLE NO	CORRECTIVE ACTION & DATE CORRECTED
1	Verify that container label arrangement is correct as per 20-C-605			
2	Verify that locking ring and lock bolt are secure on drum (+/- 6" from drum seam)			
3	Ensure the FMPC Lot Marking Code, Drum Number, and Reactivity Code are applied			
4	Record the weights minus the tare SAC weight on the XX Card (1200 lbs. max.)			
5	Ensure that weights are correctly stenciled on drum			
6	Completed XX (65 Card) to NMC clerk and assist in Transfer Record			
7	Ensure that the 68/69 Card and the Transfer Record is in envelope			
8	Ensure that Generator and Supervisor or Alternate has signed XX (66) Card and that card is in envelope			
9	Record the drum fill date on the Hazardous Waste Label as Start Date (see Note A)			
10	Check the EPA Waste Number on Hazardous Waste Label			
11	Check the UN or NA Number on Hazardous Waste Label			
12	Check the drum exterior per SOP 20-C-605 criteria			
13	Check the drum exterior and SAC container for leaks, making sure they are clean			
14	Examine Hazardous Waste Label to ensure that it is complete (see Note 2)			
15	Ensure that the Hazardous Waste Disposal Record is complete and in envelope			
16	Ensure that the Material Evaluation Form (MEF) is in envelope			
17	Sign this check list and place it into the envelope			
18	Verify SAC and container are ready for transfer/storage			
19	Notify Waste Management and ITO/MVO that container is ready for storage/transfer			

NOTE 1: Date should be the same date appearing on Hazardous Waste Disposal Record sheet.
NOTE 2: Should include Generator's name/address, EPA ID No., DOT Shipping Name, and should be written in waterproof ink

COMMENTS: _____

INSPECTOR'S SIGNATURE: | DATE: | SUPERVISOR'S SIGNATURE: | DATE:

HAZARDOUS WASTE CONTAINER PRE-TRANSFER CHECKLIST
FORM FMPC-OPR-3133
Figure 9

R - MATERIAL REVISED, ADDED, OR DELETED.

RECORD OF ISSUE/REVISIONS

DATE	REV NO.	DESCRIPTION AND AUTHORITY
01-16-89	N/A	Procedure required for accumulating hazardous waste at satellite accumulation areas (CIO C88-161) per Request No. P88-334.
05-26-89	N/A	Reissued to update to current operation per Request No. P89-285 and incorporate CIOs C89-006, C89-007, C89-008, C89-009, C89-010, and C89-011 per Request Nos. P89-025, P89-026, P89-027, P89-028, P89-029, P89-030.
03-23-90	0	Reissued to reflect current operation per Request No. P89-389, initiated by K. A. Lawson. Revision program changed from "Page Revision Date" to "Revision No.". Also incorporated CIOs C89-072, C89-073, CIO C89-074, C89-076, C89-077, and C89-104 per Request Nos. P89-408, P89-409, P89-407, P89-412, P89-417, and P89-451.
11-16-90	0	Reissued to reflect current operation per Request No. P90-463, initiated by J. Ogg. Also incorporated CIOs C90-026, C90-027, C90-028, C90-081, C90-080, and C90-082 per Request Nos. P90-226, P90-227, P90-228, P90-392, P90-391, and P90-389.
06-21-91	1	Revised to incorporate CIOs C91-007, C91-008, and C91-009 per Request Nos. P91-139, P91-113, and P91-116.

R - MATERIAL REVISED, ADDED, OR DELETED.

OPERATIONS PROCEDURE	HAZARDOUS MATERIAL SPILL CLEAN-UP	SOP 20-C-606 2344 SECTION: As Applicable AREA: As Applicable
Authorization: R. L. Gardner	Supersedes: None	Issue Date: 10-12-89

1.0 PURPOSE

The purpose of this document is to define the requirements for reporting, containing, controlling, and cleaning hazardous material leaks and spills.

2.0 APPLICABILITY

This procedure applies to hazardous material leak and spill events which occur in Waste Operations and Operations Department areas.

3.0 RESPONSIBILITIES

3.1 All personnel shall be responsible for reporting spills/leaks of haz[illegible] material per this SOP and Site Policy & Procedure FMPC-503.

3.2 Personnel trained in spill cleanup per this SOP shall be responsible for cleanup preparation, containing leaking material, and controlling/cleaning spills.

3.3 Supervision shall be responsible for the following:

3.3.1 Upon notification of a spill, immediately reporting the incident by telephone (Ext. 6511) to the Assistant Emergency Duty Officer (AEDO) through the Communications Officer, or directly to the AEDO by radio (202).

3.3.2 Investigating and performing a preliminary evaluation of the magn[illegible] nature of the incident.

3.3.3 Securing the spill area and controlling or containing the spill/leak as specified in this SOP.

3.3.4 Reporting the spill incident to the Area or Plant Manager per Site Policy and Procedure FMPC-503.

3.3.5 Ensuring that only trained personnel contain, control, and clean hazardous material leaks and spills per this SOP.

3.3.6 Contacting Industrial Hygiene and/or Radiological Safety to determine the appropriate respiratory protection and other required protective equipment.

3.3.7 Contacting Industrial Hygiene, Radiological Safety, and/or Materials Control & Accountability as required to assist in the identification of the spilled substance and provide technical information.

R - MATERIAL REVISED, ADDED, OR DELETED.

3.0 RESPONSIBILITIES (cont.)

3.3.8 Providing trained personnel with the required respiratory protection and other protective equipment as specified by Quality and Safety.

3.3.9 Completing a Minor Event Report (MER), as applicable, per FMPC Site Procedure FMPC-704 after the spill is cleaned or controlled.

3.3.10 Ensuring equipment is cleaned after use.

3.4 Industrial Hygiene and/or Radiological Safety shall be responsible for the following:

3.4.1 Assisting supervision in identification of the material spilled as requested.

3.4.2 Determining exposure risk and appropriate personal protective equipment.

3.4.3 Providing smear surveys of an area following cleanup of a PCB spill, in order to verify the area as clean as specified by the EPA.

3.5 The Assistant Emergency Duty Officer (AEDO) shall be responsible for the following:

3.5.1 Classifying the event.

3.5.2 Providing the necessary information to the Spill Advisor for support in the assessment and establishment of the off-site reporting requirements.

3.5.3 Completing reporting requirements as specified in Site Policy and Procedure FMPC-503.

3.6 Materials Control and Accountability (MC&A) shall be responsible for assisting supervision in the identification of the material spilled as requested.

3.7 Waste Technology shall be responsible for the following:

3.7.1 Determining container compatibility for the waste.

3.7.2 Providing training material and support to supervision as required.

R - MATERIAL REVISED, ADDED, OR DELETED.

4.0 DEFINITIONS

4.1 Acid - Corrosive chemicals with a PH of less than 7.0, such as hydrochloric acid, hydrofluoric acid, nitric acid, and sulfuric acid.

4.2 Assistance Emergency Duty Officer (AEDO) - The AEDO is the onsite management authority for abnormal events during all shifts.

4.3 Caustics - Corrosive chemicals with a PH greater than 7.0, such as ammonia, calcium oxide, calcium hydroxide, potassium hydroxide, and sodium hydroxide.

4.4 Compatible Container - A container, usually a drum, that is approved by Waste Technology, to be compatible with the waste being accumulated.

4.5 Hazardous Material - A substance or material, including a hazardous substance which has been determined by the U.S. Department of Transportation to be capable of posing an unreasonable risk to health, safety and property when transported in commerce, and which has been so designated.

4.6 Hazardous Substance - For purposes of this procedure, means any "hazardous substance" designated under the Clean Water Act (CWA), and "hazardous waste" regulated under the Resource Conservation and Recovery Act (RCRA), any "toxic pollutant" listed under the Clean Water Act, any "hazardous air pollutant" listed under the Clean Air Act (CAA), any substance regulated by the EPA under section 7 of the Toxic Substances Control Act (TSCA), any additional substances designated by USEPA as hazardous under the Comprehensive Environmental Response, Compensation, and Liability Act (CERCLA), or any substance reportable under the Occupational Safety and Health Act (OSHA). The term hazardous substance does not include petroleum.

4.7 Reportable Quantity - Quantity of substance released to the environment which must be reported to regulatory agencies.

4.8 Sorbent - A substance that adsorbs such as straw, clay, vermiculite, activated charcoal, sorbent sheet, or PIGS and pillows.

4.9 Event - An unplanned, unwanted occurrence which requires classification by the AEDO.

4.10 Hazardous Waste - A waste material exhibiting the characteristics f ignitability, corrosivity, reactivity, or toxicity or listed in 40 CFR 261 (RCRA) or identified in applicable state regulations.

R - MATERIAL REVISED, ADDED, OR DELETED.

4.0 DEFINITIONS (cont.)

4.11 Spill Incident - For purposes of this procedure, a spill includes any unplanned event involving spilling, leaking, pumping, pouring, injecting, escaping, emitting, emptying, leaching, releasing, dumping, discharging or disposing of a hazardous toxic pollutant, hazardous substance, hazardous material, toxic pollutant, hazardous air pollutant, radioactive substance, oil or Toxic Substances Control Act (TSCA), Section 8 (e) chemical substance or mixture into the environment.

4.12 TSCA Section 8 (e) Chemical Substance - A chemical substance or mixture which presents a substantial risk of injury to health or environment, as defined in the Toxic Substances Control Act (TSCA).

4.13 Resource Conservation and Recovery Act (RCRA) - The Congressional Act requiring strict control for the safe handling and disposal of hazardous waste not specifically covered by other laws and regulations.

5.0 REFERENCES

5.1 SOP 20-C-601, "Packaging Low Level Radioactive Waste for Off-Site Disposal"

5.2 SOP 20-C-605, "Hazardous Waste Satellite Accumulation Areas"

5.3 SOP 1-C-605, "Low Level Radioactive Waste Shipment Preparation"

5.4 FMPC-503, "FMPC Spill Incident Reporting and Cleanup"

5.5 FMPC-719, "PROPER Lock and Tag Procedure"

5.6 FMPC-704, "Minor Event Reporting System"

6.0 INDUSTRIAL HEALTH AND SAFETY REQUIREMENTS

6.1 Safety glasses shall be worn in the Process Area unless other eye/face protection is required by Quality and Safety.

6.2 Personal protective equipment and clothing shall be worn for spill clean-up when specified by Quality and Safety.

6.3 Leather-palm gloves shall be worn when handling drums, operating equipment, and when handling rough, sharp-edged, or contaminated material.

6.4 Neoprene gloves shall be worn when handling liquids.

R - MATERIAL REVISED, ADDED, OR DELETED.

6.0 INDUSTRIAL HEALTH AND SAFETY REQUIREMENTS (cont.)

6.5 In the case of contact with acids or caustics, contaminated clothing shall be removed and the affected body area thoroughly flushed with water in a Safety Shower/Eye Bubbler. Injured personnel shall report to Medical Services for treatment as soon as possible.

6.6 Personnel cleaning spills shall wear respiratory protection provided by the supervisor.

6.7 Any circumstance which could have resulted in an intake of radioactive materials by inhalation, ingestion or absorption shall immediately be reported to a supervisor. The supervisor shall immediately report the circumstance of possible radioactive materials intake to Radiological Safety for evaluation. The involved employees shall report to Medical Services at the end of their shift or as directed to submit a urine sample and again report at the start of their next shift to submit another urine sample.

7.0 PROCEDURE

7.1 Reporting a Spill

NOTE: Any employee who detects an actual or potential hazardous spill shall be responsible for reporting the spill.

7.1.1 Immediately alert nearby workers and leave the area of the spill.

7.1.2 Notify supervision of the spill.

7.1.2.1 If a supervisor is not available, pull the nearest fire alarm or dial Ext. 6511 on the telephone to notify the Communications Center.

7.1.2.2 If possible, when reporting the spill, be prepared to report the location of the spill, identity of material (if known), any personnel injuries or unusual conditions, the source of the spill, whether or not the flow has stopped, and approximately how much material was spilled.

R - MATERIAL REVISED, ADDED, OR DELETED.

7.0 PROCEDURE (cont.)

7.2 Preparation For Cleaning Spill

7.2.1 Identify the spilled material and hazards associated with the cleanup of the material.

CAUTION: IF SPILL CONTAINS A FLAMMABLE SUBSTANCE, ALL SOURCES OF ELECTRICAL, THERMAL AND MECHANICAL ENERGY WHICH MAY BE A SOURCE OF IGNITION, SHOULD BE IDENTIFIED, DE-ENERGIZED, AND LOCKED OUT AS SPECIFIED IN FMPC-719,"PROPER LOCK AND TAG PROCEDURE".

NOTE: IH and Radiation Safety personnel shall assist in the proper identification of the spilled material and provide technical information as requested. Material Safety Data Sheets, or the Material Lot Marking System may be used for material identification.

NOTE: If the spill contains a flammable substance, the Fire Protection Engineer shall be contacted as required.

7.2.2 Place barricades with restrictive signs around the affected area to prevent personnel not associated with the cleanup from entering.

7.2.3 Ensure required personal protective equipment, as identified by the MSDS or IH representative, is available and in good condition prior to start of the cleanup.

7.3 Containing Leaking Material from Drums/Small Containers

NOTE: If material is leaking from tank, piping, or other process equipment, directions for containing leaking hazardous material shall be provided by the supervisor or AEDO.

7.3.1 Before attempting to contain leaking material, ensure spill cleanup supplies are readily available.

NOTE: Spill cleanup supplies shall consist of patches, plugs, large plastic bags, diking materials, sorbents, plastic shovels, pails, and other miscellaneous tools.

7.3.2 Stop the flow of the leak by turning the container so that the leaking area is above the material level.

R - MATERIAL REVISED, ADDED, OR DELETED.

7.0 PROCEDURE (cont.)

7.3.3 Patch the leak, if possible, using one or more of the following methods:

NOTE: A transfer of material from the leaking container to a new container may be required.

7.3.3.1 Patch small punctures located above the liquid level which are not subject to pressure with insoluble putty.

NOTE: Ensure that the patching material is compatible with the material in the damaged container (supervisor shall contact Waste Technology for compatibility information).

NOTE: Ball plugs pierced by a bolt, washer and wing nut assembly, may also be effective in patching small punctures that are relatively round in shape.

7.3.3.2 If the patch will be subjected to liquid pressure, use a soft, wooden plug with felt padding or a self-tapping screw with a washer or gasket.

7.3.3.3 Patch small linear punctures by placing felt into the crack of the leaking drum using a wedge.

7.3.3.4 Patch larger, irregular holes with a gasket backed plate, held in place by a compression washer, nut and bolt combination, or equivalent.

7.3.3.5 Patch large holes with a combination of square, tapered or wedge shaped plugs, arranged to fit into the hole, that are wrapped in felt prior to insertion.

NOTE: Felt plugs shall not be used for drums containing corrosive materials.

7.3.3.6 As applicable, use heavy-duty tape as a temporary seal.

NOTE: Ensure that the sealing surface is dry and free of residues prior to application.

7.3.4 After leak is patched or plugged, cover leak with a plastic bag to prevent leakage when the drum is overpacked.

7.3.5 Invert the overpack drum slowly and lower over the patched drum.

7.3.6 Gently tip the two drums to an upright position.

R - MATERIAL REVISED, ADDED, OR DELETED.

7.0 PROCEDURE (cont.)

7.3.6.1 If drum weight will not allow tipping of drums, use a drum lifter and overpack drum as specified in SOP 20-C-601.

7.3.6.2 If specified by supervision, place absorbent material in space between two drums.

7.3.7 Tighten bolt ring assembly per Steps 7.3.7.1 thru 7.3.7.4.

7.3.7.1 Torque lock ring bolt to 45 ft-lbs using certified break-away torque wrench.

7.3.7.2 Tighten the locking nut against the threaded flange (right flange) by hand and then tighten 1/4 turn using wrench (See Figure 1).

7.3.7.3 Dab bolt with red paint as a visual code designating that the tightening procedure has been completed.

7.3.7.4 Thread safety wire through hole in either the bolt head or threaded portion of bolt and around threaded portion of bolt ring and fasten (See Figure 1).

7.3.8 Stencil the lot number, drum number, gross, tare, net weights and all other applicable markings as specified in SOP 20-C-605.

7.3.9 Apply appropriate labeling as specified in SOP 20-C-605.

7.4 Controlling Spill

7.4.1 Create dikes at the edges of the spill, utilizing chemically inert sorbent materials such as vermiculite, diatomaceous earth, sand, sorbent pigs, or equivalent, to contain the spilled material to the immediate area.

7.4.2 To prevent hazardous material from entering a drain or manhole, complete Steps 7.4.2.1 thru 7.4.2.2.

7.4.2.1 Cover drain or manhole with plastic, rubber sheet, plywood or equivalent.

7.4.2.2 Build diking materials around edges and top of plastic, rubber sheet, or plywood.

R - MATERIAL REVISED, ADDED, OR DELETED.

7.0 PROCEDURE (cont.)

7.5 Cleaning Spill

NOTE: One of the two following methods shall be used for cleaning spilled materials as specified by supervision or the IH Representative.

7.5.1 Neutralization

7.5.1.1 If spilled material is corrosive (acid or caustic), apply neutralizing agent to the spill to reduce or eliminate the hazardous properties of the spill.

CAUTION: IDENTIFY SPILLED MATERIAL BEFORE ATTEMPTING NEUTRALIZATION AS DANGEROUS GASES OR VAPORS MAY BE GENERATED.

NOTE: Use neutralizing agent as specified on the MSDS, by the supervisor, or IH Representative.

7.5.1.2 Apply sorbent to neutralized spill as specified in Steps 7.5.2.1 through 7.5.2.2.

7.5.2 Adsorption

NOTE: Non-reactive sorbent materials shall be used when the spilled material is a solvent, the chemical make-up of the spilled material is unknown, or the reaction resulting from neutralization would create an unsafe condition.

7.5.2.1 Apply specified sorbent to spill carefully by starting at outer edges and working toward the center to reduce the chances of spreading the spill.

CAUTION: WHEN USING SORBENT FOR FLAMMABLE MATERIALS, USE ONLY NON-SPARKING TOOLS TO AVOID STARTING A FIRE. APPROPRIATE FIRE FIGHTING EQUIPMENT SHALL BE READILY AVAILABLE IN CASE OF AN EMERGENCY.

NOTE: Supervisor shall specify sorbent to be used.

R - MATERIAL REVISED, ADDED, OR DELETED.

7.0 PROCEDURE (cont.)

7.5.2.2 Scoop up saturated sorbent material using a shovel and place in compatible waste container.

CAUTION: **BECAUSE SORBENTS DO NOT CHANGE THE HAZARDOUS PROPERTIES OF A SPILLED SUBSTANCE, USE CAUTION DURING CLEANUP AND DISPOSAL.**

7.5.3 Tighten bolt ring assembly per Steps 7.3.7.1 thru 7.3.7.4.

7.5.4 Stencil the lot number, drum number, gross, tare, net weights and all other applicable markings as specified in SOP 20-C-605.

7.5.5 Apply appropriate labeling as specified in SOP 20-C-605.

7.5.6 Discard contaminated disposable items such as clothing and diking/adsorbent materials in properly identified containers.

NOTE: Any disposable item which comes into contact with a hazardous material must be handled and stored as a hazardous waste. Therefore, it is very important to minimize the amount of waste materials generated during cleanup.

7.5.7 After spill is removed, clean equipment per SOP 1-C-101 before returning equipment to use.

7.5.8 Following cleanup of a PCB spill, contact the Industrial Hygiene Department to smear the area to determine if clean up of the area was effective.

8.0 APPLICABLE FORMS

NONE

R - MATERIAL REVISED, ADDED, OR DELETED.

RECORD OF ISSUE/REVISIONS

PAGE	DATE	REV. NO.	DESCRIPTION AND AUTHORITY
1 thru 11	10-12-89	0	Procedure required for cleaning hazardous spills per Request No. P89-370, initiated by K. A. Lawson.

R - MATERIAL REVISED, ADDED, OR DELETED.

Control No. 99-1011

FMPC
OPERATIONS

CHANGE IN OPERATION

CIO NO. C90-050 2344

Effective Date: 09-14-90

Expiration Date: 03-14-91

1. AFFECTED DOCUMENT NUMBER
SOP 20-C-606

2. AFFECTED DOCUMENT PAGE NUMBER
11

3. TITLE OR SUBJECT:
Hazardous Material Spill Cleanup

4. OPERATION AND AREA AFFECTED:
Leak/Spill Cleanup/As Applicable

5. SAFETY SYSTEM INVOLVED: YES [ ] NO [X]

6. AUTHORIZATION:
R. L. Gardner, Operations Facilities

DEPARTMENT: Operations

7. CHANGE:

1) Figure 1 is added as follows:

2) Figure 2 is added as follows:

REQUIRED DOCUMENT ACTION

[ ] Prepare and issue new document per this CIO. [ ] PRIORITY ASSIGNMENT

[X] Revise affected procedure/specification per this document. [I] PRIORITY ASSIGNMENT

[ ] No procedure/specification action required.

FILING INSTRUCTION: File Facing page 11 , SOP 20-C-606
(Issue Date: 10-12-89 , Revision Date/Rev. No. 0)

1945-XXA
#36
1st & 4th
4-card set
K-489

CARD XX **ITEM PRODUCTION/CERTIFICATION/IDENTIFICATION**

P. O. NO.	SOURCE	CLASS	MATERIAL TYPE	LOT SEQUENCE NO.	DATE MO	DATE DAY	DATE YEAR	SHIFT	BADGE NO.	PACKAGE NO.

SEAL NUMBER	SEAL DATE MONTH	SEAL DATE DAY	SEAL DATE YEAR

WASTE DESCRIPTION AND COMMENTS

PACKAGE TYPE	
PACKAGE SIZE	

PACKAGE-PHYSICAL CERTIFICATION	YES	NO
EMPTY CONTAINER AT START		
RUST HOLES OR DENTS		
MATERIAL IS AS CODED		
PROHIBITED MATERIALS		
LIQUIDS IN CONTAINER		
MINIMUM OF VOID SPACE		
PACKAGE SECURED		
DRAIN PLUG SECURED		

PLANT	PROD. MBA
PLANT TO	MBA TO

GROSS WEIGHT

TARE WEIGHT

NET WEIGHT

GENERATOR SIGNATURE

SUPERVISOR SIGNATURE DATE

FMPC-CONT-1945-XX (REV. 12/19/88)

ITEM PRODUCTION/CERTIFICATION/IDENTIFICATION
FORM FMPC-CONT-1945
Figure 1

2344

NUCLEAR MATERIAL TRANSFER RECORD

CARD NO.
68

NEGATIVE	DATE TRANSFERRED			SHIFT	TRANS. BY BADGE NO.	NOTE: Green card is for receiver information ONLY and may be retained in file. DO NOT FORWARD to Data Processing. DO NOT LEAVE with the material.
	MO.	DAY	YEAR			

CARD SEQUENCE NO.: 2,2,2,8,2

P.O. NO.:	SOURCE:
MATERIAL CLASS:	MATERIAL TYPE:
LOT SEQUENCE NO.:	
MATERIAL DESCRIPTION:	
SHAPE CODE:	

MBA: (FROM)	PLANT:
MBA: (TO)	PLANT:
STORAGE LOCATION:	

NO. OF CONTAINERS OR ITEMS	
NUMBER	DESCRIPTION
GROSS WEIGHT:	
TARE WEIGHT:	

SIGNATURES:

(SHIPPER) (TRANSPORTATION) (RECEIVER)

AC-1990 (REV 12/8/83)

NUCLEAR MATERIAL TRANSFER RECORD
FMPC-AC-1990
Figure 2

SITE SERVICES PROCEDURE	NORCLEAN PORTABLE VACUUM OPERATION	SOP 20-C-700 AREA: As Applicable
Authorization: R. L. Gardner Facilities and Warehousing	Supersedes: None	Issue Date: 05-30-91

1.0 PURPOSE

The purpose of this document is to establish the procedure for operating NORCLEAN vacuum cleaners.

2.0 APPLICABILITY

This procedure is applicable to NORCLEAN vacuums used at the FMPC.

3.0 RESPONSIBILITIES

3.1 Supervisors shall be responsible for the following:

3.1.1 Contacting Industrial Hygiene and Radiological Safety to determine the appropriate respiratory protection for the process to be performed.

3.1.2 Providing operators with the required respiratory protection.

3.1.3 Ensuring personnel are qualified per the established training requirements identified by the Department/Staff Manager.

3.1.4 Obtaining and posting a Radiation Work Permit (RWP) before opening a vacuum.

3.1.5 Signing the "Portable Dust Collector Sign-Out Sheet", Form FMPC-PRO-2631 when a NORCLEAN vacuum is removed from or moved into an assigned building.

3.1.6 Contacting Industrial Hygiene to determine the information required for Hazard Communications Labels.

3.1.7 Arranging for repair of damaged and/or inoperative equipment.

3.2 Operators shall be responsible for complying with this SOP.

4.0 DEFINITIONS

4.1 Knockout Drum - A drum with a special lid attached that collects liquids or residues for transfer and/or storage.

4.2 Power Head - The part of the vacuum cleaner that produces the suction.

4.3 High Efficiency Particulate Air (HEPA) Filter - A filter that removes 99.97% of 0.3 micron or larger particles from the vacuum exhaust air.

4.4 DOP Test - An in-place filter test which uses di-octyl phthalate (DOP) to challenge the particulate removal efficiency of the HEPA filter.

4.0 DEFINITIONS (cont.)

4.5 Prefilter Bag - A polyester felt filter installed upstream of the HEPA filter to prevent large particles from reaching the HEPA filter.

4.6 Knockout Lid - Special lid that attaches to the drum used to collect liquids or light residues for storage and/or transfer for processing.

5.0 REFERENCES

5.1 SOP 20-C-101, "Moving and Storing Nuclear Materials On-Site at the FMPC"

5.2 SOP 20-C-102, "Nuclear Safety for Receiving, Storing, Repackaging, and Moving Enriched Uranium Materials < 20% U-235"

5.3 SOP 20-C-605, "Control of Satellite Accumulation Areas"

5.4 SOP 20-C-707, "DOP Testing In-Place HEPA Filters"

5.5 SOP 20-C-904, "General Nuclear Safety Requirements"

6.0 INDUSTRIAL HEALTH AND SAFETY REQUIREMENTS

6.1 A defined safety system is not involved.

6.2 Nuclear safety requirements of the SOP or MS for the applicable area shall be observed for the material removed from the dust collector.

6.3 Safety glasses shall be worn unless additional eye/face protection is specified by the supervisor, posted signs, or IRS&T.

6.4 Respiratory protection provided by the supervisor shall be worn when required by IRS&T.

6.5 Leather-palm gloves shall be worn when handling drums and when operating the vacuum.

6.6 Material removed from the vacuum shall be moved and stored per SOP 20-C-101 or 20-C-102, 20-C-904, and 20-C-605.

6.7 When working in dusty conditions, the exterior of clothing shall be vacuumed before removing respirator.

6.8 Preoperational inspections shall be completed before operating the collec

R - MATERIAL REVISED, ADDED, OR DELETED.

6.0 INDUSTRIAL HEALTH AND SAFETY REQUIREMENTS (cont.)

6.9 The power cord on electrical units shall not be plugged in, or the vacuum operated, in areas of standing water.

6.10 Extension cords shall be equipped with, or plugged into, a Ground Fault Protector.

6.11 The vacuum shall not be used to vacuum wet material or liquid unless the vacuum is equipped with a vendor supplied/recommended water separator device.

6.12 Air supply to air operated units shall be off and air supply hose bled empty before disconnecting the air supply from the vacuum cleaner.

6.13 Clothing and body parts shall be clear of the suction inlets and suction hoses of operating units.

6.14 The suction hose shall not be pointed towards materials that are not to be collected or personnel.

6.15 The vacuum exterior, hoses, separator lids, and vacuum accessories shall be identified with a "Hazard Communications Label".

6.16 Units with frayed, burnt, or cut power cords or cords that have damage extending through the insulated covering shall not be used.

6.17 The vacuum shall be disconnected from the power source prior to maintenance or before the vacuum is opened.

6.18 Prior to emptying the unit, changing filters, or cleaning the vacuum interior, a "Radiation Work Permit" shall be obtained and posted.

6.19 Spills shall be vacuumed as soon as the spill occurs and Radiological Safety notified.

6.20 After installation, HEPA filters shall be DOP tested.

6.21 Any circumstance which could have resulted in an intake of radioactive materials by inhalation, ingestion or absorption shall immediately be reported to a supervisor. The supervisor shall immediately report the circumstance of possible radioactive materials intake to Radiological safety for evaluation. The involved employees shall report to Medical Services at the end of their shift or as directed to submit a urine sample and again report at the start of their next shift to submit another urine sample.

NOTE

WARNINGS, CAUTIONS, and Notes provide safety precautions and/or additional information for the step to be performed and precede the step to which they apply.

7.0 PROCEDURE

7.1 Prestart Inspection

7.1.1 Inspect the NORCLEAN vacuum and fill out the "Portable Dust Collector Operating Log" Form FMPC-EM-2630 (See Figure 1) as follows:

7.1.1.1 Check the exterior of the container and HEPA housing, wheels, frame, power head, and suction inlet for damage that would prevent operation of the unit.

NOTE

When an extension cord is used, the cord shall be the same or larger size and gauge for the amperage and distance as the vacuum cleaner cord.

7.1.1.2 If the vacuum is equipped with an electrical power cord, check the cord (and any extension cords used) for fraying, cuts, charred insulation, visible signs of brittle insulation, loose wires, and wires exposed on cord(s), including at the cord ends.

NOTE

Degredation in air supply quality will cause a disproportionate degradation in the performance of the vacuum and may effect performance of the HEPA filter.

7.1.1.3 For air powered NORCLEAN Vacuums, check the ON/OFF Valve to ensure that the valve is OFF and not damaged, the air supply is free of water and debris, and that the supply hose has a one inch Chicago fitting secured to the air supply and vacuum with safety wire or pin, and is free of cracks, tears, or other noticeable damage.

CAUTION

DO NOT USE VACUUM IF THE NFPA LABEL INDICATES THAT MATERIAL AND UNIT ARE NOT COMPATIBLE.

7.1.1.4 Record the name of material type to be collected and compare the type with information on hazard communications (NFPA) label on vacuum.

R - MATERIAL REVISED, ADDED, OR DELETED.

7.0 PROCEDURE (cont.)

7.1.1.5 Check that Magnehelic Gage is present, has a current calibration tag attached, and not damaged.

NOTE

HEPA Filter testing is required if any condition listed in Step 7.1.1.6 is not met.

7.1.1.6 Check the HEPA in-place DOP test certification labels. Ensure that the HEPA test date is current, the labels are present, and the HEPA seal has not been tampered with.

7.1.1.7 Check suction hoses, hose fixtures, and any drums that are used for a hazard communications (NFPA) label.

7.1.2 Notify the supervisor if the unit does not meet inspection criteria.

7.2 Knockout Lid Installation

7.2.1 If a drum equipped with a Knockout Lid is to be used for pickup and storage of material, tare weigh a 55 gallon drum that is color-coded for the material to be contained.

NOTE

The supervisor shall use FMPC-2178 to designate the lot number and MTC to be stencilled on the drum.

7.2.2 Stencil the drum with the tare weight and the lot number and MTC supplied by the supervisor.

7.2.3 Inspect the drum for rust, dents, corrosion or other damage that could weaken drum wall strength.

7.2.3.1 If damage is found, set the drum aside and notify the supervisor.

7.2.4 If the drum is to be used for dry residue transfer, Proceed as follows (See Figure 2):

7.2.4.1 Place the Knockout Lid on top of the 55 gallon drum.

7.2.4.2 Connect the suction hose to the Knockout Lid Suction Inlet.

7.2.4.3 Connect a suction hose between the vacuum cleaner suction Inlet and the Knockout Lid Suction Outlet.

R - MATERIAL REVISED, ADDED, OR DELETED.

7.0 PROCEDURE (cont.)

7.2.5 If the drum is to be used for liquid, proceed as follows (See Figure 3):

7.2.5.1 Check Knockout Lid sealing gasket for cuts, tears, breaks, gouges, and any other damage that could prevent an air tight seal.

7.2.5.2 Notify the supervisor if lid gasket damage is found.

7.2.5.3 Check the float assembly.

NOTE

The supervisor shall obtain a Knockout Lid with a float assembly when the inspection shows that the lid being checked is not equipped with a float.

7.2.5.4 If no float is installed, notify the supervisor.

7.2.5.5 Install the lid and float assembly on the drum.

7.2.5.6 Connect a suction hose to the Knockout Lid Suction Inlet.

7.2.5.7 Connect a suction hose between the Vacuum Cleaner Suction Inlet and the Knockout Lid Suction Outlet.

7.3 Air Powered Unit Startup

7.3.1 Check the "Portable Dust Collector Operating Log" to ensure a preoperational inspection was performed. If not, perform Item 7.1.

7.3.2 Ensure that the Plant Air Outlet Valve and the Air Supply Valve on the NORCLEAN vacuum are OFF.

7.3.3 Using an air hose, connect the Plant Air Supply Outlet to the vacuum "ON/OFF" ball valve on the NORCLEAN Air Power Head.

7.3.4 Open the Plant Air Outlet Valve.

7.3.5 Connect a Knockout Drum in the suction line (See Figure 2) per Item 7.2.

NOTE

To stop temporarily, the Air Supply Ball Valve shall be closed.

7.3.6 Open the ball valve on the Air Operated Power Head.

R - MATERIAL REVISED, ADDED, OR DELETED.

7.0 PROCEDURE (cont.)

7.4 Electrically Powered Unit Startup

7.4.1 Check the "Portable Dust Collector Operating Log" to ensure that preoperational inspection has been completed. If not, perform Item 7.1.

NOTE

Use of longer lengths of suction hose than is necessary for job will cause reduced suction and hose clogging.

7.4.2 Connect the suction hose to the Suction Unit Inlet.

7.4.3 Connect the suction tools to the suction hose.

7.4.4 Connect the electric power cord to an electrical outlet.

7.4.5 Connect a drum equipped with a Knockout Lid in the suction line (See Figure 2) per Item 7.2.

NOTE

To stop temporarily, the ON/OFF switch may be set to OFF.

7.4.6 Turn the ON/OFF switch to ON.

NOTE

If liquid is being picked up, when drum is full the float will automatically rise and shutoff the suction.

NOTE

Dry, light, and/or fluffy material will carry over to vacuum cleaner. A full drum is determined by changes in vacuuming sound or suction rate decrease.

7.5 Vacuum Cleaner Shutdown

7.5.1 Shutdown Air Powered Vacuum Cleaners as follows:

7.5.1.1 Turn the Air Supply Ball Valve on the Vacuum Power Head to the closed position.

7.5.1.2 Shut off the air supply to the power head.

R - MATERIAL REVISED, ADDED, OR DELETED.

7.0 PROCEDURE (cont.)

7.5.1.3 Open the ball valve on power head 1/4 turn.

7.5.1.4 When the air is bled from the Supply Line, close ball valve.

7.5.1.5 Disconnect the air hose from the Plant Air Supply outlet and vacuum.

7.5.1.6 Disconnect the hoses from the Knockout Drum.

7.5.1.7 If vacuuming is complete and/or the drum is full, remove the Knockout Lid and install a lid and lock ring on the drum.

7.5.2 Shutdown Electric Powered Vacuum Cleaner as follows:

7.5.2.1 Turn the ON/OFF switch to OFF.

7.5.2.2 Unplug power cord.

7.5.2.3 Secure the cord to the vacuum cleaner.

7.5.2.4 Disconnect hoses from the Knockout Drum.

7.5.3 Remove the Knockout lid.

7.5.4 Install a lid and lock ring on the drum.

7.5.5 If the drum is to be stored, weigh the drum.

7.5.6 Stencil the drum with gross and net weight.

NOTE

The dual container preseparator (See Figure 4) is required when using the vacuum for asbestos.

7.6 Use of Dual (Double Drum) Container Vacuum Cleaners

NOTE

A plastic bag installed in the Collection Drum allows safe disposition of asbestos and prevents the Collection Drum from becoming contaminated.

7.6.1 Line the Collection Drum with a 6 mil polyethylene bag.

7.6.2 Install a Knockout Lid on the Collection Drum.

R - MATERIAL REVISED, ADDED, OR DELETED.

7.0 PROCEDURE (cont.)

7.6.3 Attach a suction hose section to the Knockout Lid Inlet and connect another hose between the Filter/Suction Drum and the Knockout Lid Outlet.

7.6.4 Start the vacuum per Item 7.4.

NOTE

The supervisor shall obtain and post an Asbestos Work Permit and an RWP before a bag of asbestos is removed from the vacuum.

7.6.5 When the polyethylene bag is full or has to be changed, notify the supervisor and proceed as follows:

7.6.5.1 Ensure that the permits have been obtained and posted.

7.6.5.2 Disconnect and tape the ends of the hoses to the Knockout Lid.

7.6.5.3 Using a second HEPA Filter equipped vacuum, clean the Knockout Lid surface.

7.6.5.4 Remove the Knockout Lid.

7.6.5.5 Using a second vacuum equipped with a HEPA Filter, remove spilled and/or loose material.

7.6.5.6 Close the polyethylene bag and tape the bag shut to prevent the escape of loose residues.

7.6.5.7 Remove the bag from Collection Drum.

7.6.5.8 Place the bag of asbestos residue in a second 6 mil plastic bag and seal the bag with tape.

7.6.5.9 Dispose of the bag in a white drum labelled as containing asbestos.

7.6.5.10 Install a new polyethylene bag in the drum.

7.6.5.11 Install the Knockout Lid and hoses.

R - MATERIAL REVISED, ADDED, OR DELETED.

8.0 TROUBLESHOOTING

8.1 Clogged Hose

8.1.1 Attach the tool end of hose to suction end of the cleaner.

8.1.2 Turn the cleaner on.

8.1.3 If suction does not remove the clog, lightly tap along the hose with a hammer until the obstruction is removed.

8.2 Loss of Suction

8.2.1 Ensure that the compressed air line diameter is large enough to furnish adequate suction.

NOTE

Dirt and moisture in the air supply will reduce the performance of the vacuum.

8.2.2 Ensure that the air source is clean and dry.

8.2.3 Ensure that air fittings and air supply hose are large enough for the material being picked up.

8.2.4 Check the hoses for plugs and/or flow restrictions, holes, or breaks/tears.

NOTE

The gasket is checked audibly for hissing noises and by feel for escaping air. If the lid is opened to check the gasket, the HEPA filter shall be retested.

8.2.5 Check under the gasket lid for air leaks.

8.2.5.1 If a leak around the lid is discovered, proceed per Item 8.8

8.2.6 If the gasket is undamaged, check to ensure that the sealing surface lip at top of each container is smooth and round.

8.2.6.1 If the sealing surface is nicked, gouged, or out-or-round, obtain a new drum.

R - MATERIAL REVISED, ADDED, OR DELETED.

8.0 TROUBLESHOOTING (cont.)

8.2.7 Check connections around handles to ensure that mounting holes and hardware are sealed.

8.2.8 Check the suction hose interfaces with inlet connections on containers and work tools. Tighten loose connections.

8.2.9 Check the Magnehelic Gage on the vacuum. If the reading exceeds 3.0 inches, change filters per Section 9.0.

8.2.10 If the Magnehelic Gage reading is less than 3.0 inches, remove and replace the disposal dust bag per Item 9.1.

8.3 Loss of Suction While Operating the Electric Powered Head

WARNING

DO NOT TOUCH FRAYS, BREAKS, OR EXPOSED WIRES DISCOVERED DURING POWER CORD INSPECTION.

8.3.1 Visually check the power cord for breaks, fraying, or exposed wires. Notify the supervisor if a damaged cord is found.

8.3.2 Check the ON/OFF switch. If the switch is not operating, notify the supervisor.

8.3.3 Perform Item 8.2.

NOTE

The supervisor shall have a new motor installed if switch replacement did not restore suction.

8.3.4 If the switch was replaced and the motor will not run, notify the supervisor.

8.4 Dust in Vacuum Discharge Air

NOTE

The unit shall be shut off as soon as dust is observed.

8.4.1 Shut off the unit.

8.0 TROUBLESHOOTING (cont.)

NOTE

The supervisor shall obtain and post an RWP before the Lid Assembly is removed.

8.4.2 Notify the supervisor of the condition.

8.4.3 Check to ensure that an RWP is posted.

8.4.4 Open the latches and remove the Lid Assembly.

8.4.5 Check the seal around the filters and lids. If a seal is not maintained, adjust the filter or lid position to effect a seal.

8.4.6 Check the condition of the filters and seals.

8.4.7 Replace damaged or torn filters per Item 9.2.

NOTE

If the vacuum was opened, the HEPA Filter shall be DOP tested before the vacuum is used.

8.4.8 Install the Lid Assembly in the suction unit and inform the supervisor that the unit is ready for HEPA Filter test.

8.5 Abnormal Noise Level

NOTE

The supervisor shall obtain and post an RWP before the power head is removed.

8.5.1 Notify the supervisor of the condition.

8.5.2 Check to ensure that an RWP is posted.

8.5.3 If the unit is equipped with an air powered head, check the power head insulation.

8.5.3.1 If the power head insulation is dirty or wet, remove and replace the silencing materials.

8.5.4 If the unit is equipped with an electric power head, check foam insulation and replace foam that is dirty or wet.

R - MATERIAL REVISED, ADDED, OR DELETED.

8.0 TROUBLESHOOTING (cont.)

8.5.5 Open the latches and remove the lid assembly from the suction unit.

8.5.6 Check all gasket seals, especially under the lid of power head.

NOTE

The HEPA Filter shall be tested before the vacuum is used.

8.5.7 Install the Lid Assembly in the suction unit, fasten latches, and notify supervisor that the unit requires HEPA Filter DOP test.

8.6 Moisture in Discharge Air

8.6.1 If the unit has an air powered head, check the air supply line for moisture.

8.6.1.1 If moisture is found, dry the line.

8.6.2 Check the HEPA Filter for moisture.

8.6.2.1 Replace a filter that is wet.

NOTE

The supervisor shall obtain and post an RWP before the Knockout Lid is removed.

8.6.3 Notify the supervisor of the condition.

8.6.4 Check to ensure that an RWP is posted.

8.6.5 Check the Knockout Lid to ensure that the float ball and basket assembly are correctly installed. If not, adjust the ball and/or basket.

8.6.6 Check the float ball operation.

8.6.6.1 Replace cracked, corroded, or out-of-round balls.

R - MATERIAL REVISED, ADDED, OR DELETED.

8.0 TROUBLESHOOTING (cont.)

NOTE

A second vacuum approved by Radiological Safety shall be available for spill cleanup before the power head/filter housing assembly is removed following a pressure drop.

8.7 HEPA Filter Magnehelic Gage Shows a Pressure Drop Equal to or Greater Than 3 Inches

NOTE

The supervisor shall obtain and post an RWP before the power head/filter housing assembly is removed.

8.7.1 Notify the supervisor of the condition.

8.7.2 Check to ensure that an RWP is posted.

8.7.3 Spread a plastic sheet near the unit.

CAUTION

TWO PERSONS ARE REQUIRED TO LIFT THE POWERHEAD/FILTER HOUSING OFF THE SUCTION UNIT.

8.7.4 Remove the vacuum power head and HEPA filter housing assembly as one unit and set the head and housing on the plastic sheet.

8.7.5 Replace the dust bag and the prefilter bag per Items 9.1, 9.2, and 9.3.

8.7.6 Install the power head/filter housing assembly.

NOTE

If the pressure drop is less than 3 inches, the HEPA filter does not need to be replaced.

8.7.7 Start the unit and check the pressure drop on the Magnehelic Gage.

8.7.7.1 If the gage reads above 3 inches, replace the HEPA filter per Item 9.4.

8.7.8 Notify the supervisor that the vacuum is ready for HEPA Filter DOP test the HEPA Filter was replaced.

8.0 TROUBLESHOOTING (cont.)

8.8 Gasket Inspection

NOTE

The supervisor shall obtain and post an RWP before the lid is opened for gasket inspection.

8.8.1 Move the cleaner to a contamination area designated by the supervisor and Radiological Safety

8.8.2 Check to ensure that an RWP is posted.

8.8.3 Remove the lid and check the gasket.

8.8.4 If the gasket is cracked, scorched, brittle, or damaged to prevent sealing, replace the gasket as follows:

8.8.4.1 Notify the supervisor of gasket replacement.

8.8.4.2 Remove the retainer ring screws.

8.8.4.3 Remove the retainer ring.

8.8.4.4 Remove the worn gasket.

8.8.4.5 Install the new gasket on the retainer ring.

8.8.4.6 Position the retainer ring and new gasket.

8.8.4.7 Secure the retainer ring and gasket with the retainer ring screws.

9.0 DUST BAG/FILTER REMOVAL AND INSTALLATION

NOTE

A second vacuum approved by Radiological Safety shall be available while removing/replacing bags and filters for spill cleanup.

9.1 Preparation

9.1.1 Obtain tare weighed drums that are color coded for the material being vacuumed and stencil the drums with the lot marking and MTC per FMPC-2178.

MATERIAL REVISED, ADDED, OR DELETED

9.0 DUST BAG/FILTER REMOVAL AND INSTALLATION (cont.)

9.1.2 Check to ensure that an RWP is posted.

9.1.2.1 If an RWP is not posted, notify the supervisor.

9.1.3 Spread a plastic sheet by the vacuum to be cleaned.

9.2 Disposable Dust Bag Replacement

9.2.1 If not already done, disassemble the power head and filter housing as follows:

9.2.1.1 Remove the vacuum power head and HEPA filter housing assembly as one unit.

CAUTION

TWO PERSONS ARE REQUIRED TO REMOVE THE POWER HEAD/HOUSING ASSEMBLY FROM THE SUCTION UNIT.

9.2.1.2 Place the power head and housing assembly on the plastic sheet to minimize spread of contamination.

9.2.2 Gently pull the disposable bag off the Vacuum Suction Inlet (See Figure 5).

9.2.3 Fold the bag opening over and secure the opening with plastic tape.

9.2.4 Install a 6 mil plastic bag over the top of the Suction Unit and secure the bag with tape.

9.2.5 Slowly turn the Suction Unit onto the side.

NOTE

The plastic bag shall remain secured to the container except for the portion that is loosened.

9.2.6 Lift a piece of the tape that secures the 6 mil bag to the Suction Unit.

9.2.7 Transfer the disposable bag from the Suction Unit into the plastic bag.

9.2.8 Remove plastic bag from container, twist the top of the bag closed, and set the bag aside on the plastic sheet.

9.2.9 Lift the Suction Unit upright.

R - MATERIAL REVISED, ADDED, OR DELETED.

9.0 DUST BAG/FILTER REMOVAL AND INSTALLATION (cont.)

9.2.10 Tape the end of the plastic bag closed.

9.2.11 Place the bag in the drum marked for the disposal bag contents.

9.2.12 Install a new disposable dust bag as follows:

9.2.12.1 Slide the bag to the bottom of the Suction Unit with the gasketed hole of the Suction Inlet.

9.2.12.2 Pull the gasketed hole over the Suction Inlet Tube.

9.2.12.3 Lock disposable dust bag in place by pulling the attachment ribbon down over the barbed hook provided at the top of the Suction Inlet, or by draping the dust bag over the top lip of the drum if no barbed hook is provided.

CAUTION

POWER HEAD/FILTER HOUSING INSTALLATION SHALL BE DONE BY TWO PERSONS.

9.2.13 Install the power head and filter housing assembly on top of the Suction Unit.

9.3 Prefilter Bag Replacement

9.3.1 Perform Item 9.1.

CAUTION

TWO PERSON ARE REQUIRED IF THE POWER HEAD/FILTER HOUSING ARE TO BE REMOVED.

9.3.2 If not already done, remove the power head and filter housing as follows:

9.3.2.1 Remove the Vacuum Power Head and HEPA Filter Housing Assembly as one unit.

9.3.2.2 Place the unit on the plastic sheet.

R - MATERIAL REVISED, ADDED, OR DELETED.

9.0 DUST BAG/FILTER REMOVAL AND INSTALLATION (cont.)

NOTE

The Prefilter Bag will remain on the bottom of the float basket (See Figure 5) attached to the bottom of the HEPA filter housing or will remain on top of the lower container of the vacuum. The concave face of the prefilter will be contaminated.

9.3.3 Remove the prefilter.

9.3.4 Place the prefilter in a plastic disposal bag.

9.3.5 Tape the opening of the disposal bag to secure the filter.

9.3.6 Place the bag in the drum marked for the disposal bag content.

9.3.7 Stretch a new Prefilter over the float basket until the basket is completely covered.

CAUTION

KEEP FINGERS AWAY FROM THE HEPA FILTER HOUSING BOTTOM RING AND TOP RING OF BOTTOM CANISTER WHILE INSTALLING THE POWER HEAD/FILTER HOUSING.

9.3.8 Hold the Prefilter in place and install the power head and HEPA filter housing.

9.3.9 Visually inspect to ensure that the filter bag material is draped over the outside of the top ring of the canister.

9.3.10 Lock down the fasteners.

9.4 HEPA Filter Replacement

9.4.1 Unlock lock down fasteners to release the power vacuum head from the HEPA filter housing.

9.4.2 Lift power head off of HEPA filter housing (See Figure 5).

9.4.3 Disconnect Magnehelic Gage Impulse Line.

R - MATERIAL REVISED, ADDED, OR DELETED.

9.0 DUST BAG/FILTER REMOVAL AND INSTALLATION (cont.)

NOTE

The HEPA Filter is located on the underside of power head.

9.4.4 Set power head on the plastic sheet so that the HEPA Filter is visible.

9.4.5 Remove and set aside the thumbwheel nut.

9.4.6 Remove and set aside the rubber sealing washer and metal washer.

9.4.7 Remove the HEPA Filter and place the filter in a plastic disposal bag.

9.4.8 Tape the disposal bag containing the HEPA Filter closed.

9.4.9 Clean gasket sealing surface on the bottom of the power head to remove dust, debris and gasket material.

9.4.10 Inspect the replacement HEPA filter and filter top sealing gasket for dents, tears, cuts, nicks, or other damage that could prevent filtration or sealing.

9.4.11 Check the filter fitting to ensure that the filter and Magnehelic Gage are compatible.

9.4.12 Install the HEPA filter, gasket first, over the threaded bar.

9.4.13 Ensure that the top sealing gasket on the filter seats flush and smooth against the underside of the power vacuum head.

9.4.14 Install the metal washer and the rubber sealing washer on the threaded rod protruding from the filter.

9.4.15 Tighten the thumb wheel nut until the load induced compresses the top sealing gasket on the HEPA filter.

NOTE

A properly installed HEPA filter should be snug and refuse to turn.

9.4.16 Attempt to turn the filter clockwise.

9.4.16.1 If the filter turns, tighten the thumbwheel nut one or two turns.

9.0 DUST BAG/FILTER REMOVAL AND INSTALLATION (cont.)

9.4.17 Check power head sealing gasket for damage and/or defects.

9.4.17.1 If the gasket is damaged preventing a seal being formed, replace the gasket per Item 8.8.

9.4.18 Connect impulse line to the HEPA filter.

9.4.19 Ensure line is undamaged and secured to the Magnehelic Gage.

9.4.20 Position power head on top of the HEPA filter housing.

9.4.21 Close the lock down fasteners to secure the power head.

9.4.22 Inspect vacuum cleaner per Item 7.1.

NOTE

Magnehelic Gage reading for a new HEPA Filter should be approximately 0.5 to 1.0 inches of H_2O.

9.4.23 Check the Magnehelic Gage reading and notify the supervisor if the reading is high or low.

9.4.24 Perform a DOP (In-Place) Test on the HEPA filter per SOP 20-C-707.

9.4.25 Place the plastic bag containing the used HEPA Filter in the drum marked for disposal.

10.0 APPLICABLE FORMS

10.1 FMPC-EM-2630, "Portable Dust Collector Operating Log"

R - MATERIAL REVISED, ADDED, OR DELETED.

FMPC
CLEAN AIR PROGRAM
PORTABLE DUST COLLECTOR OPERATING LOG

FACILITY OWNER: _____ COLLECTOR NUMBER: _____ MONTH: _____

DATE	OPERATOR BADGE NUMBER	SHIFT	MATERIAL TYPE	1 FILTER BAGS	2 EXTERIOR HOUSING	3 DUST HOPPER LEVEL	4 POWER CORD	5 AIR SUPPLY	6 MATERIAL LABEL	7 PRESSURE GAUGE	8 GAUGE TUBING	9 HEPA TEST LABEL	10 HEPA HOUSING	11 GA RELA

NOTE: Refer to list on back of this form when performing inspection of portable dust collector.

NO.	DISTRIBUTION OF COPIES
1	CLEAN AIR PROGRAM

PORTABLE DUST COLLECTOR OPERATING LOG
FMPC-EM-2630
Figure 1 (Sheet One of Two)

R - MATERIAL REVISED, ADDED, OR DELETED.

SITE SERVICES PROCEDURE	NORCLEAN PORTABLE VACUUM OPERATION	SOP 20-C-700 AREA: As Applicable
Authorization: R. L. Gardner, Facilities and Warehousing	Supersedes: None	Issue Date: 05-30-91

INSTRUCTIONS: 1. *The items listed in Table I shall be checked prior to turning on the portable dust collector referenced each day the collector is operated*

2. *Denote with an "S" all satisfactory findings, and "N" not satisfactory findings and "DNA" those items listed that do not apply.*

3. *At the beginning of each month, issue a new operating log for the referenced collector.*

TABLE I

ITEM	ITEM NAME	INSPECTION	CONDITION	CORRECTIVE ACTION
	MATERIAL TYPE	MATERIAL TO BE VACUUMED (ALL)		Ensure unit is compatible with residue to be collected. Record material to be collected in space provided
	FILTER BAGS	INTERIOR OF BAGHOUSE (HOFFMAN/SPENCER)	Filters dirty. No dust is the acceptable condition.	Contact supervisor. Proceed as directed.
	EXTERIOR/ HOUSING	OUTER CIRCUMFERENCE/ FRAME/WHEELS (ALL)	Dents	Notify supervisor. Proceed as directed
			Hole(s), loose/missing rivets or clips or knobs or bolts	REMOVE FROM SERVICE. Notify supervisor
			Shaker arm boot missing or torn	REMOVE FROM SERVICE. Notify supervisor
	DUST HOPPER LEVEL	DUST HOPPER (HOFFMAN/SPENCER)	Hopper more than half full	Remove residues from hopper
	POWER CORD (ELECTRIC POWERED UNITS)	CORD (ALL)	Frayed, not exposing wires	DO NOT USE. Notify supervisor to have repaired
			Frayed, exposing wires	DO NOT USE. Notify supervisor to have repaired
			Worn/damaged	Notify supervisor. Proceed as directed
		CONNECTIONS (ALL)	Cracked, broken, contact bent	DO NOT USE. Notify supervisor to have repaired
			Excessive wear	Notify supervisor. Proceed as directed
	AIR SUPPLY (AIR POWERED UNITS)	VACUUM VALVE	"OFF" and free of damage	If cannot turn "OFF" or if damaged, DO NOT OPERATE
		BUILDING SUPPLY	Free of water or debris	"BLOW DOWN" to ensure supply is clear
		SUPPLY LINE	Sufficient diameter for powerhead in question	Size requirements can be found in unit SOP
			Proper fitting/safety wire or pin	Fitting type required can be found in SOP. DO NOT USE incorrect fittings
		HOSE	Free of cracks, tears or noticeable damage	DO NOT USE if damage found
	MATERIAL LABEL	NFPA LABEL (ALL)	Label missing	Contact supervisor and identify material, then label unit. DO NOT USE without label affixed
			Listed material on label not compatible	Contact IH Section. If material is not compatible a different vacuum unit must be selected
	PRESSURE GAUGE	GO/NO GO MANOMETER/ MAGNEHELIC GAUGE (ALL BUT GS-80 & -81)	Gauge missing	DO NOT OPERATE. Notify supervisor to replace
			Out-of-calibration	Notify supervisor to have gauge calibrated
			Gauge damaged	Notify supervisor and proceed as directed
	GAUGE TUBING	TAPS, TAP CONNECTORS, TUBING, GAUGE CONNECTORS (HOFFMAN/SPENCER/ BARTLETT)	Connectors/tubing damaged	DO NOT OPERATE. Notify supervisor.
			Tubing kinked/missing	DO NOT OPERATE. Notify supervisor.
	HEPA LABEL	CERTIFICATION LABEL (ALL)	Label torn, missing or expired	REMOVE FROM SERVICE. Have unit retested
	HEPA HOUSING	OUTER CIRCUMFERENCE (ALL)	Dents, holes, loose clips/clamps	REMOVE FROM SERVICE. Have unit in-place tested
	GAUGE READING	GO/NO GO GAUGE/ MAGNEHELIC GAUGE (ALL BUT GS-80 & -81)	Gauge in high green or red (GS-82 & -83 HAKO)	Replace paper disposal bag and clean main filter. Recheck gauge reading when done
			Reading greater than 3 High setpoint is 7" for Bartlett (Hoffman/Spencer/Bartlett/Norclean)	Change HEPA. Check to see if bags need to be changed

FMPC-2630 REV 9/19/89

PORTABLE DUST COLLECTOR OPERATING LOG
FMPC-EM-2630
Figure 1 (Sheet Two of Two)

R - MATERIAL REVISED, ADDED, OR DELETED.

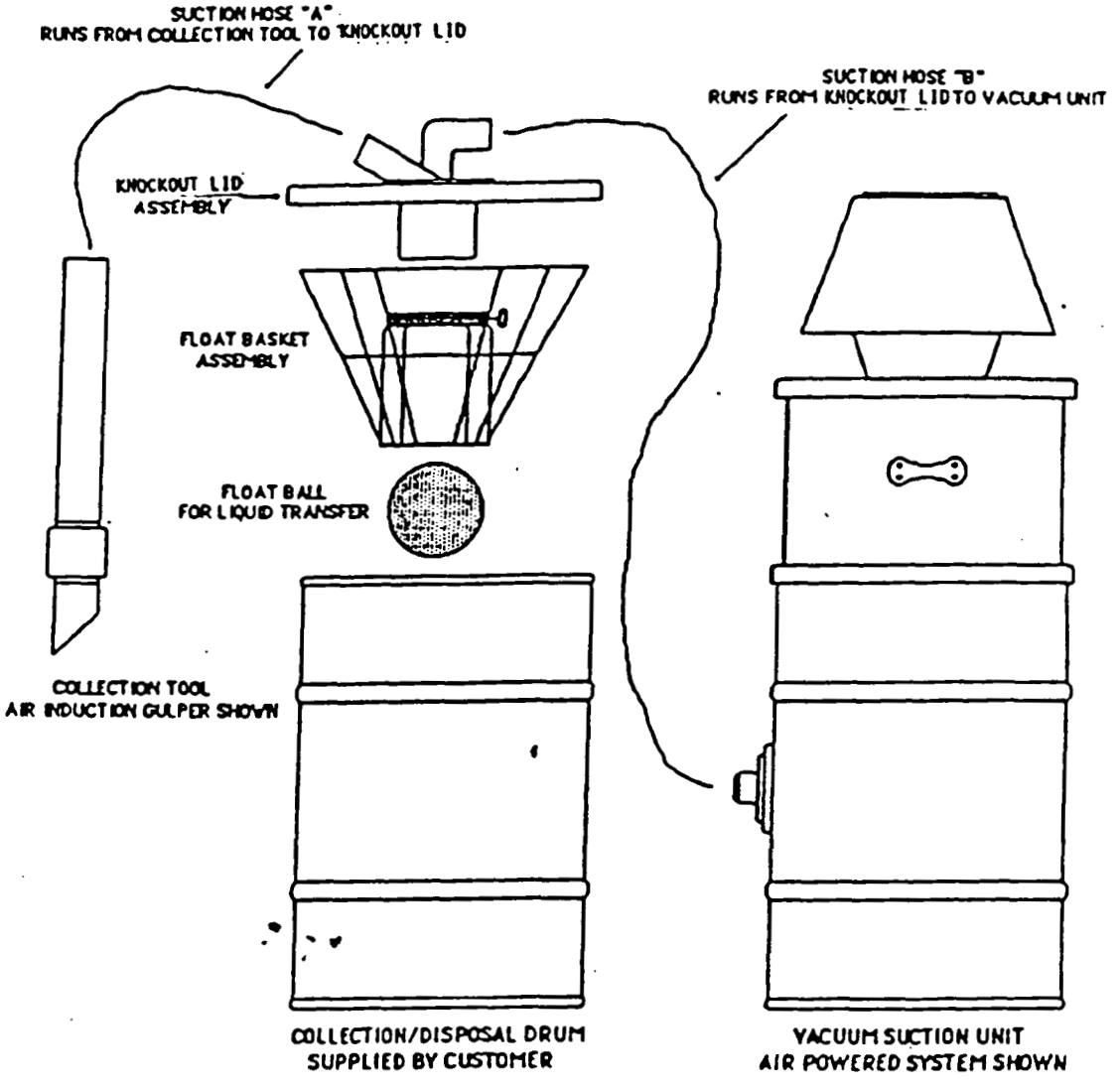

KNOCKOUT LID INSTALLATION
Figure 2

MATERIAL REVISED, ADDED, OR DELETED

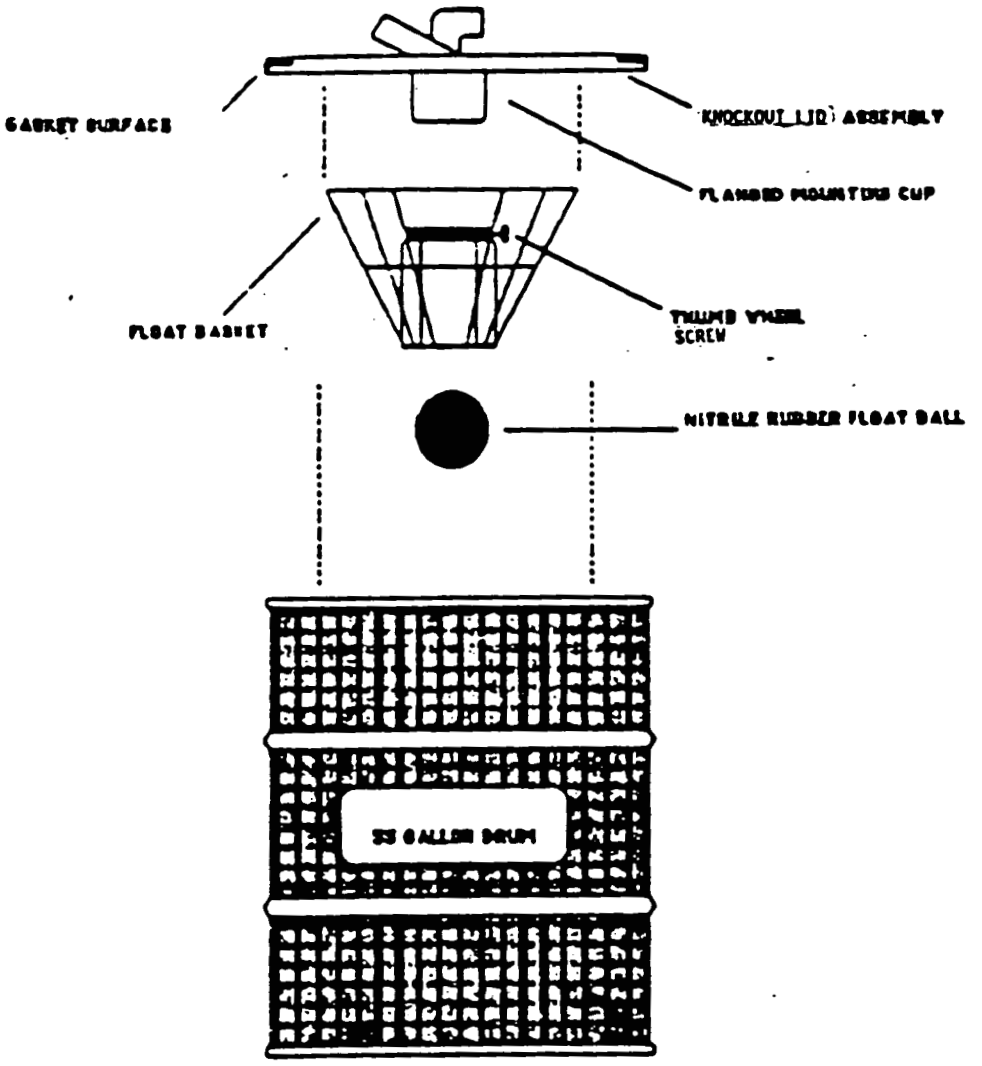

KNOCKOUT LID FLOAT ASSEMBLY
Figure 3

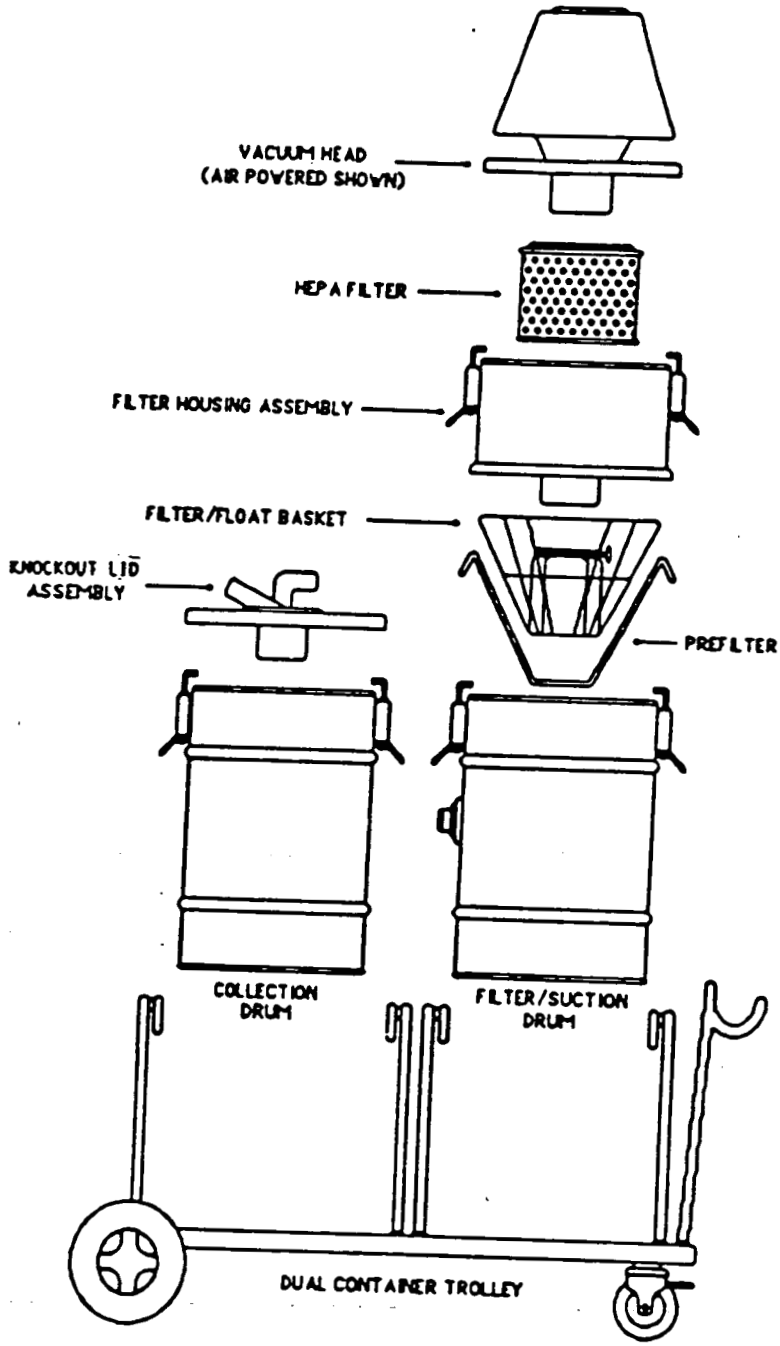

DUAL CONTAINER
Figure 4

R - MATERIAL REVISED, ADDED, OR DELETED.

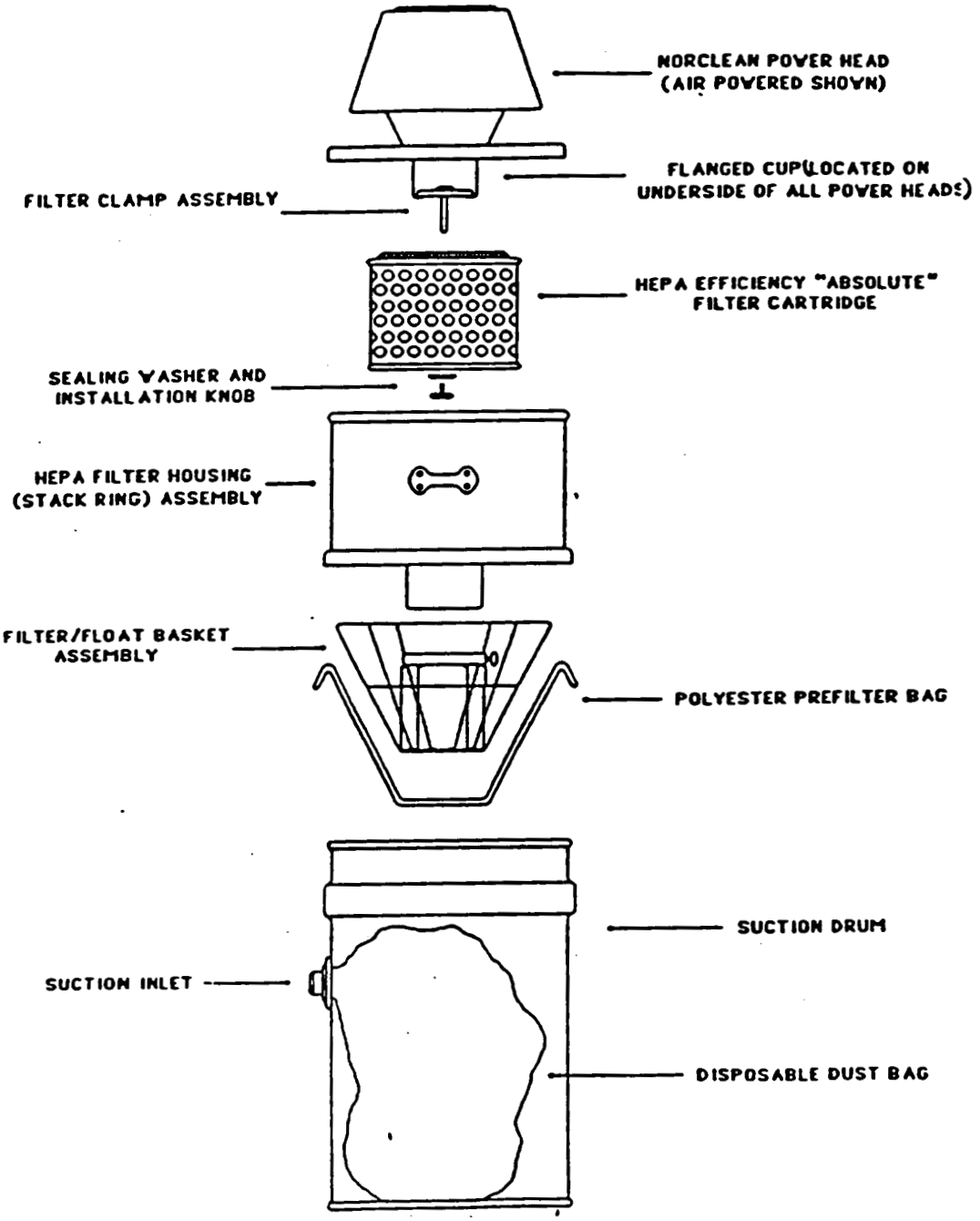

NORCLEAN VACUUM ASSEMBLY
Figure 5

R - MATERIAL REVISED, ADDED, OR DELETED.

RECORD OF ISSUE/REVISIONS

DATE	REV. NO.	DESCRIPTION AND AUTHORITY
05-30-91	0	Procedure requirement for operating NORCLEAN Vacuum Cleaners per Request P90-350, initiated by C. R. Palmer.

R - MATERIAL REVISED, ADDED, OR DELETED.

FMPC WESTINGHOUSE MATERIALS COMPANY OF OHIO OPERATIONS DOCUMENT PROGRAM	Page 1 of 15 Revision No.: 1	2344
OPERATIONS PROCEDURE	OPERATION OF SPENCER AND HOFFMAN PORTABLE DUST COLLECTORS	SOP 20-C-701 AREA: All
Authorization: R. L. Gardner, Facilities & Warehousing Mgr.	Supersedes: 20-C-701 Dated 09-19-86	Issue Date: 07-05-89

1.0 PURPOSE

The purpose of this document is to establish the procedure for operating Spencer and Hoffman Portable Dust Collectors.

2.0 APPLICABILITY

This procedure is applicable to the Spencer and Hoffman Portable Dust Collectors at the FMPC.

3.0 RESPONSIBILITIES

3.1 Supervisors shall be responsible for the following:

3.1.1 Contacting Industrial Hygiene or Radiological Safety to determine the appropriate respiratory protection for the process being performed.

3.1.2 Providing operators with the required respiratory protection.

R 3.1.3 Ensuring that personnel are qualified per the established training
R requirements identified by the Department/Staff Manager.

3.1.4 Authorizing the removal of the dust collector from the assigned Plant.

3.1.5 Signing the appropriate spaces of the "Portable Dust Collector Sign-Out Sheet", Form FMPC-PRO-2631 when a collector is checked out, received, and/or returned.

3.1.6 Obtaining a "Radiation Work Permit" (RWP) before opening a collector.

3.2 Operators shall be responsible for complying with this SOP.

4.0 DEFINITIONS

None

5.0 REFERENCES

5.1 SOP 20-C-101, "Moving and Storing Nuclear Materials On-Site at the FMPC"

5.2 SOP 20-C-102, "Nuclear Safety for Receiving, Storing, Repackaging, and Moving Enriched Uranium Materials <20% ^{235}U"

5.3 SOP 20-C-904, "General Nuclear Safety Requirements"

R - MATERIAL REVISED, ADDED, OR DELETED.

6.0 INDUSTRIAL HEALTH AND SAFETY REQUIREMENTS

6.1 A defined safety system is not involved.

6.2 Nuclear safety requirements of the SOP or MS for the applicable area shall be observed for the material removed from the dust collector.

6.3 Safety glasses shall be worn unless additional eye/face protection is specified by Safety.

6.4 Respiratory protection provided by the supervisor shall be worn when the dust collector is open, while replacing dust bags, when operating the shaker mechanism, and when dusty conditions exist.

6.5 Leather-palm gloves shall be worn when handling drums and when operating the dust collector.

6.6 Material removed from the dust collector shall be moved and stored per SOP 20-C-101 or SOP 20-C-102 and 20-C-904.

6.7 When working in dusty conditions, nuclear material shall be vacuumed from exterior of clothing before removing respirator.

6.8 Access door shall remain closed at all times except while conducting inspection or performing maintenance.

6.9 Pre-start checks shall be completed before operating the collector.

6.10 Process and safety clothing shall be worn and be completing buttoned when the dust collector access door is open.

6.11 Start/stop switch shall be "OFF" before power cord is plugged into or removed from an electrical receptacle. If the receptacle is controlled by an ON/OFF switch, the receptacle switch shall also be off.

6.12 The power cord shall not be plugged in, or the unit shall not be operated, in areas of standing water.

6.13 The unit shall not be used to vacuum excessively wet material or liquid unless the unit is equipped with a vendor supplied/recommended water separator device.

6.14 The unit shall not be used to vacuum asbestos material or material classified as a biological hazard.

R - MATERIAL REVISED, ADDED, OR DELETED.

6.0 INDUSTRIAL HEALTH AND SAFETY REQUIREMENTS (cont.)

6.15 Prior to emptying the unit, changing filters, or cleaning the baghouse, the unit shall be moved to an area that has been approved by Radiological Safety and a "Contamination Control Zone" (Zone 3) established.

6.16 When inspecting the baghouse or collection hopper, a vacuum source shall be available to pickup any material that is spilled.

6.17 Spills shall be vacuumed as soon as the spill occurs and Radiological Safety notified.

R 6.18 After installation, HEPA filters shall be DOP tested.

6.19 Units without HEPA filtration certification shall not be used, except for units assigned to, and operated in, the Boiler Plant.

6.20 Any circumstance which could have resulted in an intake of radioactive materials by inhalation, ingestion or absorption shall immediately be reported to a supervisor. The supervisor shall immediately report the circumstance of possible radioactive materials intake to Radiological Safety for evaluation. The involved employees shall report to Medical Services at the end of their shift or as directed to submit a urine sample and again report at the start of their next shift to submit another urine sample.

NOTE

WARNINGS, CAUTIONS, and NOTES precede the Item or Step to which they apply.

7.0 PROCEDURE

NOTE

The pre-start checks shall be performed on the dust collectors listed in Table 1 at the start of each shift of use.

7.1 Pre-start Checks

R 7.1.1 Check the area to make sure that a "Radiation Work Permit" (RWP) is posted.

R 7.1.1.1 If not, notify the supervisor.

R - MATERIAL REVISED, ADDED, OR DELETED.

7.0 PROCEDURE (cont.)

TABLE 1

Portable Dust Collectors

Collector Number	Model Number	Assigned Location	Type
P1-001	P-190	Plant 1	Spencer
P1-002	HVP 150 B4	Plant 1	Hoffman
P2-001	075	Plant 2/3	Hoffman
P2-002	HVP 150 B4	Plant 2/3	Hoffman
P4-001	075	Plant 4	Hoffman
P4-002	075	Plant 4	Hoffman
P4-003	HVP 150 B4	Boiler Plant	Hoffman
P5-002	075	Plant 5	Hoffman
P5-003	075	Plant 5	Hoffman
P5-004	P3F-002	Plant 5	Hoffman
P5-005	P3F-002	Plant 5	Hoffman
P6-003	P-190	Plant 6	Spencer
P6-004	P3F-002	Plant 6	Hoffman
P6-005	075	Plant 6	Hoffman
P6-006	P3F-002	Plant 6	Hoffman
P6-007	P3F-002	Plant 6	Hoffman
P6-008	P3F-002	Final Inspection	Hoffman
P6-009	P3F-002	Final Inspection	Hoffman
P8-001	075	Plant 8	Hoffman
P9-001	P3F-002	Plant 9	Hoffman
P9-003	075	Plant 9	Hoffman
P12-001	030	Building 12	Hoffman
P13-004	075	Pilot Plant	Hoffman

R - MATERIAL REVISED, ADDED, OR DELETED.

7.0 PROCEDURE (cont.)

NOTE

Use the vacuum to pick up spills that may occur when opening the unit, checking the bags, and inspecting the dust level in the separator.

NOTE

R If a dust collection system is not available, a second HEPA filtered
R and approved portable dust collector shall be used to pick up spills.

7.1.2 Check that the dust collector that furnishes vacuum for the area is operating. If not, start and operate the unit per the applicable SOP.

R 7.1.3 Using a light source, visually inspect the bags per the "Portable Dust
R Collector Operating Log", Form FMPC-PRO-2630, (See Figure 3).

7.1.3.1 If material is spilled, notify the supervisor and Radiological Safety and vacuum the material.

7.1.4 Check level of dust accumulation in separator.

7.1.5 Check the HEPA Filter Label. If the label is damaged or the expiration date has past, notify the supervisor and proceed as directed. Record check results in the "Comment" section of the operational checksheet.

NOTE

Do not attempt to repair or reattach bags. Maintenance is responsible for changing bags.

7.1.6 Report any unusual condition such as torn or loose bags to the supervisor.

7.1.7 Check that the electrical power supply at location where unit is to be used matches the motor requirements on motor name plate.

7.1.8 Inspect the power cord for damage. Do not use cut, worn, or frayed cords or cords with bare wires showing through the insulation. Replace the cord.

R - MATERIAL REVISED, ADDED, OR DELETED.

7.0 PROCEDURE (cont.)

WARNING

DO NOT INSERT THE PLUG IN THE RECEPTACLE IF THERE IS WATER ON THE FLOOR.

7.1.9 Check the floor for water. If the floor is wet or there is standing water, notify the supervisor.

7.1.10 If there is an ON/OFF switch at location of receptacle, check that switch is in "OFF" position.

7.1.11 Check that the unit switch is "OFF" and insert the plug in the receptacles, if unit is not already plugged in.

7.1.12 Check that access door is tightly closed and the dust hopper is secured.

NOTE

R Inspection is required at the start of the shift or before the first use
R on the shift.

R 7.1.13 Check the unit to ensure all inspections required by Form FMPC-PRO-2630
R have been completed (Refer to Step 7.1.2).

CAUTION

RESIDUE REMOVAL SHALL BE PERFORMED IN AN AREA APPROVED BY RADIOLOGICAL SAFETY AND A CONTAMINATION CONTROL ZONE ESTABLISHED.

7.2 Removal of Residues from the Collection Hopper

7.2.1 Ensure that a "Radiation Work Permit" has been obtained.

NOTE

Use the vacuum to pick up spills that may occur while emptying the collection hopper.

7.2.2 Check that the dust collector that furnishes vacuum for the area is operating. If not, start and operate the unit per the applicable SOP.

7.2.3 For Hoffman Models P3F-002 and 030, lower the dust hopper by lifting the bar in front of the hopper.

R - MATERIAL REVISED, ADDED, OR DELETED.

7.0 PROCEDURE (cont.)

7.2.4 For Hoffman Models HVA150 and 75 and Spencer Model P-190, crank the handle on the side to lower the hopper.

7.2.5 When cleaning the unit, vacuum the container using a Plant Hi-Vac or another portable collector with a knock-out drum attachment.

NOTE

Self locating guides position the container correctly.

7.2.6 When finished, pull down the bar or crank the lever to raise the hopper from the floor and to seal the hopper against the rubber gasket.

7.3 Operation of Dust Collector

WARNING

DO NOT OPERATE THE UNIT IF THERE IS AN ACCUMULATION OF WATER ON FLOOR.

7.3.1 Check the floor for water. If water is present, notify the supervisor.

7.3.2 Press the "START" button.

7.3.3 Check the pressure across the HEPA filter. If the reading is above the requirements on the HEPA label, shut off the unit and notify the supervisor.

WARNING

DO NOT VACUUM ANY TYPE OF LIQUID, ASBESTOS OR BIOLOGICALLY HAZARDOUS MATERIAL.

CAUTION

OVERFILLING THE HOPPER COULD CAUSE HEPA FILTER FAILURE.

7.3.4 Connect a knockout drum to the dust collector inlet (See Figure 2).

7.3.5 If dust is observed in the exhaust during operation, shut down the unit immediately and notify supervisor.

7.3.6 While operating the unit, check for the following:

R - MATERIAL REVISED, ADDED, OR DELETED.

7.0 PROCEDURE (cont.)

7.3.6.1 Loss of vacuum.

7.3.6.2 Unusual differential pressure reading which would indicate that the bags or HEPA filter (when equipped) are restricted.

7.3.6.3 Unusual noises from the motor, fan, or filter housing.

7.3.7 If the unit is equipped with a shaker mechanism, after each use or once a day, operate the shaker to remove dust from the tubular bag filters.

R 7.3.8 For each shift of use, record on "Portable Dust Collector Operating Log", Form FMPC-PRO-2630 (See Figure 3) the type of material vacuumed, including enrichment level.

7.4 Shutdown

7.4.1 Press the "STOP" button.

7.5 Emergency Shutdown

WARNING

DO NOT STAND IN WATER TO OPERATE SWITCH OR REMOVE PLUG.

7.5.1 For emergency shutdown, the dust collector may be stopped by turning off the power at the plug receptacles if necessary.

7.6 Troubleshooting

7.6.1 Troubleshoot the collector per Table 2.

8.0 APPLICABLE FORMS

R 8.1 DELETED

8.2 FMPC-PRO-2630, "Portable Dust Collector Operating Log"

R - MATERIAL REVISED, ADDED, OR DELETED.

TABLE 2

SPENCER PORTABLE DUST COLLECTOR TROUBLESHOOTING GUIDE

Item No.	Problem	Condition	Corrective Action
1.	Vibration or Noise	Twisting or bending of the unit base to shaft due to uneven floor.	Check and relocate dust collector to a level floor area.
		Surge[1]	Check pick up hose for restriction, damaged, or leaking hose.
		CAUTION	
		DO NOT OPERATE UNITS IN SHUTOFF OR SURGE CONDITION SINCE ADDITIONAL HEAT AND THRUST PULSATIONS MAY CAUSE UNIT FAILURE.	
2.	Motor Overheating	Overload	Reduce Load.
3.	Lack of Vacuum	Slow Speed	Check motor name plate data and electrical circuits for proper connections, voltage and frequency.
		Vacuum Line Leakage	Check all piping separators, sleeves, discharge valves, plugs, inlet valves.
		Dirty dust bag	Inspect and if found dirty, notify supervisor.

[1]Units operating under light or no load conditions produce a breathing or pulsing air noise accompanied by low frequency vibration.

R - MATERIAL REVISED, ADDED, OR DELETED.

TABLE 2 (cont.)

SPENCER PORTABLE DUST COLLECTOR TROUBLESHOOTING GUIDE

Item No.	Problem	Condition	Corrective Action
3.	Lack of Vacuum (cont.)	Clogged HEPA filter (when equipped)	Notify supervisor.
		Blocked lines	With approval of the supervisor, remove clean out plug in piping line momentarily to insure that air is entering the system.
4.	High Differential Pressure Across HEPA filter (when equipped).	Clogged HEPA filter (when equipped)	Notify supervisor.
5.	Exhauster Overheating	Low air volume	Increase air volume. Check for blocked or restricted lines.
		Internal obstruction	Notify supervisor.

R - MATERIAL REVISED, ADDED, OR DELETED.

R DELETED

R

R Figure 1

R - MATERIAL REVISED, ADDED, OR DELETED.

OPERATIONS PROCEDURE	OPERATION OF SPENCER AND HOFFMAN PORTABLE DUST COLLECTORS	SOP 20-C-701 AREA: All
Authorization: R. L. Gardner, Facilities & Warehousing Mgr.	Supersedes: 20-C-701 Dated 09-19-86	Issue Date: 07-05-89

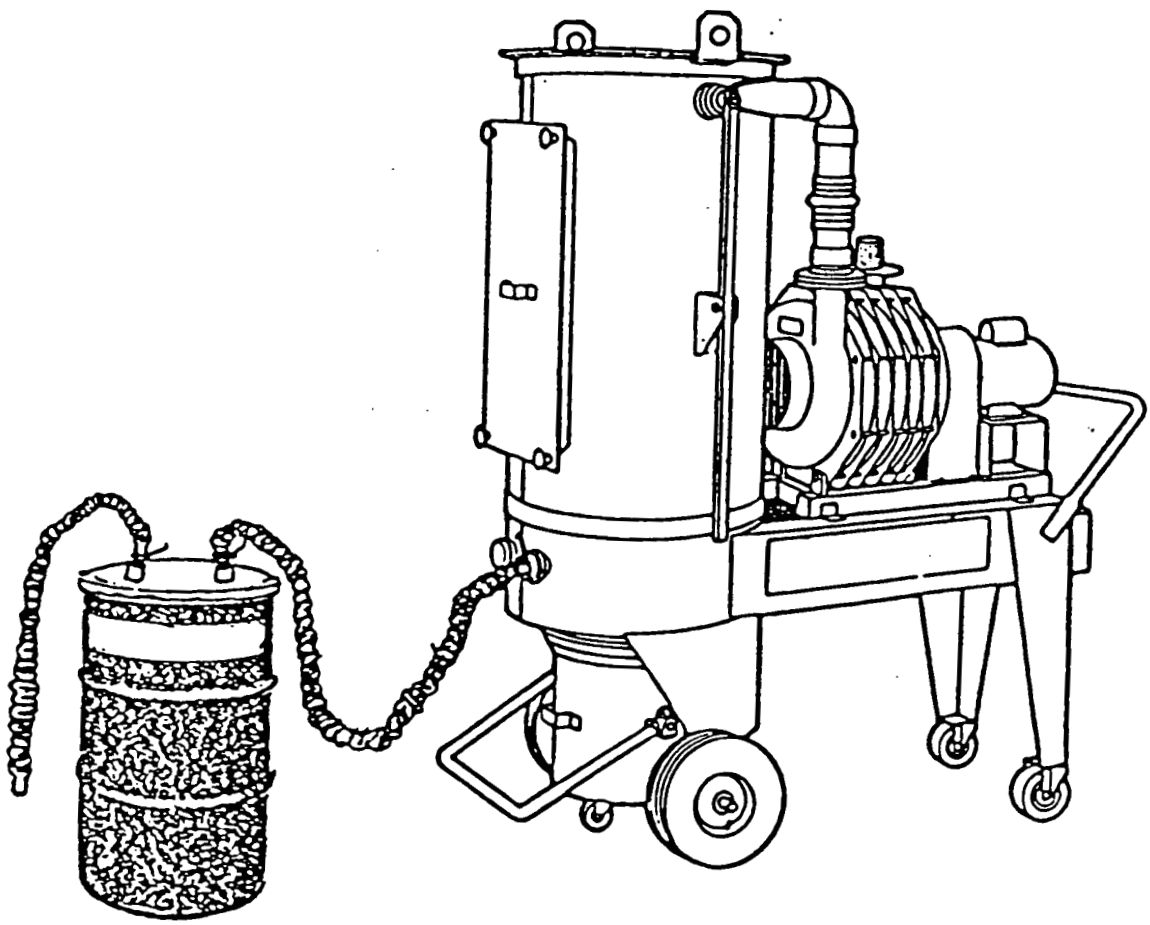

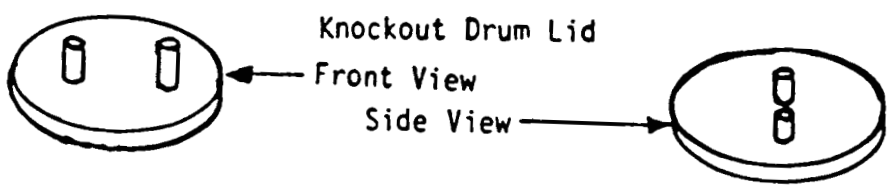

VACUUM WITH KNOCKOUT DRUM ATTACHMENT
Figure 2

OPERATIONS PROCEDURE	OPERATION OF SPENCER AND HOFFMAN PORTABLE DUST COLLECTORS	SOP 20-C-701 AREA: All
Authorization: R. L. Gardner, Facilities & Warehousing Mgr.	Supersedes: 20-C-701 Dated 09-19-86	Issue Date: 07-05-89

FMPC
MANUFACTURING
PORTABLE DUST COLLECTOR OPERATING LOG

FACILITY OWNER: ______________ COLLECTOR NUMBER: ______________ MONTH: ______________

DATE	OPERATOR BADGE NUMBER	SHIFT	MATERIAL TYPE 1	FILTER BAGS 2	BAGHOUSE HOUSING 3	DUST HOPPER LEVEL 4	POWER CORD 5	MATERIAL LABEL 6	PRESSURE GAUGE 7	GAUGE TUBING 8	GAUGE READING 9	HEPA HOUSING 10	HEPA TEST LABEL 11

NOTE: Refer to list on back of this form when performing inspection of portable dust collector.

FMPC-OPR-2630 (REV 10/27/88) *(OVER)*

PORTABLE DUST COLLECTOR OPERATING LOG
Form No. FMPC-PRO-2630
R Figure 3 (Page 1 OF 2)

INSTRUCTIONS. *1. The items listed in Table I shall be checked prior to turning on the portable dust collector referenced each day the collector is operated.*

2. Denote with an "S" all satisfactory findings, and "N" unsatisfactory findings and "DNA" those items listed that to not apply.

3. At the beginning of each month, issue a new operating log for the referenced collector.

TABLE I

ITEM	ITEM NAME	INSPECTION	CONDITION	CORRECTIVE ACTION
1	MATERIAL TYPE	MATERIAL TO BE VACUUMED (ALL)		Ensure unit is compatible with residue to be collected Record material to be collected in space provided
2	FILTER BAGS	INTERIOR OF BAGHOUSE (HOFFMAN/SPENCER)	Filters dirty	Contact supervisor Proceed as directed
3	BAGHOUSE HOUSING	OUTER CIRCUMFERENCE/ FRAME WHEELS (ALL)	Dents	Notify supervisor. Proceed as directed
			Hole(s), loose/missing rivets or clips or knobs or bolts	REMOVE FROM SERVICE. Notify supervisor.
			Shaker arm boot missing or torn	REMOVE FROM SERVICE. Notify supervisor
4	DUST HOPPER LEVEL	DUST HOPPER (HOFFMAN/SPENCER)	Hopper more than half full	Remove residues from hopper
5	POWER CORD	CORD (ALL)	Frayed, not exposing wires	DO NOT USE Notify supervisor to have repaired
			Frayed, exposing wires	DO NOT USE Notify supervisor to have repaired
			Worn/damaged	Notify supervisor Proceed as directed.
		CONNECTIONS (ALL)	Cracked, broken, contact bent	DO NOT USE Notify supervisor to have repaired
			Excessive wear	Notify supervisor Proceed as directed
6	MATERIAL LABEL	NFPA LABEL (ALL)	Label missing	Contact supervisor and identify material, then label unit DO NOT USE without label affixed
			Listed material on label not compatible	Contact IH Section. If material is not compatible a different vacuum unit must be selected
7	PRESSURE GAUGE	GO/NO GO MANOMETER/ MAGNEHELIC GAUGE (ALL BUT GS-80 & -81)	Gauge missing	DO NOT OPERATE Notify supervisor to replace
			Out-of-calibration	Notify supervisor to have gauge calibrated
			Gauge damaged	Notify supervisor and proceed as directed
8	GAUGE TUBING	TAPS TAP CONNECTORS, TUBING GAUGE CONNECTORS (HOFFMAN/SPENCER)	Connectors/tubing damaged	DO NOT OPERATE Notify supervisor
			Tubing kinked/missing	DO NOT OPERATE. Notify supervisor
9	GAUGE READING	GO/NO GO GAUGE/ MAGNEHELIC GAUGE (ALL BUT GS-80 & -81)	Gauge in high green or red (GS-82 & -83)	Replace paper disposal bag and clean main filter Recheck gauge reading when done
			Reading greater than 3 (Hoffman/Spencer)	Change HEPA. Check to see if bags need to be changed
10	HEPA HOUSING	OUTER CIRCUMFERENCE (ALL)	Dents, holes, loose clips/clamps	REMOVE FROM SERVICE. Have unit in-place tested
11	HEPA LABEL	CERTIFICATION LABEL (ALL)	Label torn, missing or expired	REMOVE FROM SERVICE Have unit retested

PORTABLE DUST COLLECTOR OPERATING LOG
Form No. FMPC-PRO-2630
Figure 3 (Page 2 OF 2)

RECORD OF ISSUE/REVISIONS

DATE	REV.NO	DESCRIPTION AND AUTHORITY
09-19-86	N/A	Request for new SOP for operation of Spencer portable dust collectors per SOP Change Request No. 1299, initiated by D. G. Schmidt.
07-05-89	N/A	Reissued to combine Hoffman/Spencer collector SOPs and reformat to conform with procedure program requirement per Request P89-076, initiated by C. R. Palmer.
04-24-91	1	Revised to update per Request No. P89-429, initiated by C. R. Palmer.

R - MATERIAL REVISED, ADDED, OR DELETED.

1.0 PURPOSE

This document establishes the procedure for processing the contents of the Refinery Sump.

2.0 APPLICABILITY

This procedure is applicable to processing uranyl nitrate solutions from Refinery Storage Tanks.

3.0 RESPONSIBILITIES

3.1 Supervisors shall be responsible for the following:

3.1.1 Ensuring that personnel are qualified per the established training requirements identified by the Department/Staff Manager.

3.1.2 Contacting Industrial Hygiene and Radiological Safety to determine the appropriate respiratory protection for the process to be performed.

3.1.3 Providing operators with the required respiratory protection.

3.1.4 Notifying Maintenance when repair is required.

3.2 Operators shall be responsible for compliance with this SOP when performing the required tasks.

4.0 DEFINITIONS

RTS - Refinery Thickener Slurry

5.0 REFERENCES

None .

6.0 INDUSTRIAL HEALTH AND SAFETY REQUIREMENTS

6.1 A defined safety system is not involved.

6.2 Chemical cover goggles shall be worn in all areas where exposure to acids, caustics, organics, steam or pressurized gases is likely, while working near pipes/valves containing hazardous substances, and while taking samples.

6.3 Safety glasses shall be worn at all times.

R - MATERIAL REVISED, ADDED, OR DELETED.

6.0 INDUSTRIAL HEALTH AND SAFETY REQUIREMENTS (cont.)

6.4 Respiratory equipment provided by the supervisor shall be worn when required by IRS&T.

6.5 Chemical-resistant gloves shall be worn when handling acidic or caustic powders and liquids. Gloves shall be checked for leaks by inflating and placing gloves under water and looking for bubbles. Dispose of leaking gloves and obtain a new pair.

6.6 After use, contaminated gloves shall be rinsed and hung up to dry, unless the inside is contaminated. Gloves with contamination inside shall be discarded.

6.7 Safety showers and eye wash stations shall be tested weekly.

6.8 Any circumstance which could have resulted in an intake of radioactive materials by inhalation, ingestion or absorption shall immediately be reported to a supervisor. The supervisor shall immediately report the circumstance of possible radioactive materials intake to Radiological Safety for evaluation. The involved employees shall report to Medical Services at the end of their shift or as directed to submit a urine sample and again report at the start of their next shift to submit another urine sample.

NOTE

WARNINGS, CAUTIONS, and NOTES precede the Step or Item to which they apply.

7.0 PROCEDURE

NOTE

The Production Area Supervisor shall notify the Production Supervisor to start Refinery Sump operations.

7.1 Preoperational Check/Activities (See Figure 1)

NOTE

A copy of the "Refinery Sump Log" shall be sent to the Production Supervisor. The original shall be routed to Production Records in Plant 2.

7.1.1 Complete "Refinery Sump Log", Form FMPC-PRO-774 (See Figure 2), sign and date the log, and enter the time the data was taken.

R - MATERIAL REVISED, ADDED, OR DELETED.

7.0 PROCEDURE (cont.)

7.1.2 Inspect lines, tanks, and valves containing nitric acid for leaks.

7.1.2.1 Notify the supervisor if leaks are found.

7.1.3 Close Wash Tank F1-613 Outlet Valve and open the inlet valve.

7.1.4 Request a Digestion Operator to start pumping Nitric Acid from Tank F1-23 to Wash Tank F1-613.

7.1.5 Watch Tank F1-613 Sight Glass. When liquid level is two inches from top of sight glass, notify Digestion Operator to stop pumping acid.

7.1.6 Adjust seal water flow to all pumps.

7.1.7 Set sump pumps to "AUTO".

7.1.8 Open Receiving Tank F2E-601 Slop Line Inlet Valves.

7.1.9 Using a steam sparge, heat Tank F2E-601 contents to $160^{o} \pm 10^{o}$ F.

7.2 Preparation of Precoat Slurry

7.2.1 Close Precoat Makeup Tank F1-616 Discharge Valve.

7.2.2 Open Process Water Valve and fill Tank F1-616 3/4 full of water. Close water valve.

7.2.3 Ensure that the ventilation system is operating.

7.2.4 Start agitator.

WARNING

A HALF MASK RESPIRATOR WITH MAGENTA HEPA FILTER SHALL BE WORN.

7.2.5 Add 25 lbs (1/2 bag) of DICALITE FILTER AID or equivalent, through Tank F1-616 porthole.

MATERIAL REVISED, ADDED, OR DELETED

7.0 PROCEDURE (cont.)

7.3 Precoating Filters D1-600, D1-601 and D1-602

NOTE

One filter shall be precoated at a time.

7.3.1 Select a filter for precoat.

7.3.2 Close Filter Outlet Valve and Nitric Acid inlet valve.

7.3.3 Close Filter Airline Inlet Valve.

7.3.4 Close Filter Inlet Valves on flexible connections.

7.3.5 Open Air Bleed-Off valve.

7.3.6 Open Precoat Inlet Valve on filter.

7.3.7 Close Inlet and Outlet Valves of remaining filters.

7.3.8 Open Precoat Makeup Tank F1-616 Outlet Valve.

7.3.9 Open Precoat Pump G1-619 or G1-629 Inlet and Discharge Valves and start the pump.

NOTE

When precoat slurry starts to flow out of Tank F1-616 vent pipe, air is evacuated from the filter.

7.3.10 When air is evacuated from filter, close the Air Bleed-Off Valve and open Precoat Outlet Valve on the filter recycle line.

7.3.11 Recycle the precoat slurry for 20 to 30 minutes. Check to ensure that the filtrate is clear.

7.4 Precipitation of Uranium from Decanted Slop Liquor

7.4.1 When Receiving Tank F1-608 contains approximately 5,000 gallons of decanted slop liquor, use the steam sparge to heat tank contents to $165^{0} \pm 5^{0}$ F.

7.4.2 Check that pH flow cells are aligned to measure the pH of sump liquor fed to Precipitator F1-609.

D - MATERIAL REVISED, ADDED, OR DELETED.

7.0 PROCEDURE (cont.)

7.4.3 Close Discharge Valve on MgO Slurry Makeup Tank F1-617 and fill the tank with $MgOH_2$ slurry from the plastic supply tank.

7.4.4 Start the agitator in Tank F1-617.

7.4.5 Open Tank F1-617 Discharge Valve.

7.4.6 Start ODS Pumps and circulate slurry through MgO slurry lines between Precipitation Tanks F1-609/F1-610 and Tank F1-617.

7.4.7 Align valves to transfer treated slop from Receiving Tank F1-608 to Precipitation Tank F1-609.

NOTE

Tank F1-609 Discharge Valve is normally closed. When Tank F1-609 is full, the slop overflows into Tank F1-610.

7.4.8 Ensure Tank F1-609 Discharge Valve is closed.

7.4.9 Start Pump G1-609 or G2E-601.

7.4.10 Contact Production Supervisor for Flow Controller setting.

7.4.11 Observe Tank F1-609 contents. When the blades are covered, start the agitator.

7.4.12 Open the Block Valve ahead of Tank F1-609 pH Controller.

7.4.13 When Tank F1-609 overflow covers Tank F1-610 agitator blades, start the agitator.

7.5 Thickener Operation

NOTE

Flow of thickener to Tank F2E-602 is regulated by level control on Tank F1-610.

7.5.1 Open valves between Tank F1-610 and Tank F2E-602. Start Pump G1-610 or G1-611.

MATERIAL REVISED, ADDED, OR DELETED

7.0 PROCEDURE (cont.)

7.5.2 Start rake in Tank F2E-602. Turn on Tank Level Control.

7.5.3 Check distance between the top rake nut and the limit switch.

CAUTION

IF BED OF THICKENER SOLIDS REACHES 14 INCHES, A LIMIT SWITCH SHUTS DOWN THE RAKE. DO NOT OVERRIDE LIMIT SWITCH.

7.5.3.1 If distance between top rake nut and limit switch is less than 14 inches, increase cycle of ODS Pumps.

7.5.3.2 If distance decreases to 7 inches or less, proceed per the "Trouble Shooting Guide" (Refer to Table 1).

7.5.4 To lower rakes, turn off power for 20 seconds at 15 to 60 minute interval until required level is established.

7.6 Filtering Thickener Tank F2E-602 Overflow

NOTE

Filtering of overflow shall not be started until filtrate from the precoat recycle is clear (Refer to Step 7.3.11).

7.6.1 When overflow liquid fills outer ring of Tank F2E-602, open Overflow Line Valves between Thickener Tank F2E-602 and Pump G2E-602 or G2E-606.

NOTE

The filter is still recycling to Precoat Tank or if filter is precoated, the Inlet and Outlet Valves are closed.

7.6.2 Open valves in filtrate line between precoated Filter D1-600, 601, or 602 and Precipitation Tank F1-610.

7.6.3 Set Pump G1-610 or G1-611 Flow Controller to 50 gpm.

7.6.4 Start Pump G2E-602 or G2E-606.

7.6.5 Close Discharge Valve between the precoated filter and F1-616 Precoat Tank

R - MATERIAL REVISED, ADDED, OR DELETED.

7.0 PROCEDURE (cont.)

TABLE 1
TROUBLESHOOTING GUIDE

Condition	Possible Cause (s)	Correction
Filters cannot be cleaned	Too many solids on filters.	Open and hand wash filter.
Drop or no pressure on filters	Grommets are bad. Precoat is not covering filter. Leakage through valve. Air evacuation valve is open. Line is plugged from thickener. Pump G2E-602 or 606 is not operating.	Replace grommets. Reprecoat filter. Replace valve. Close air evacuation valve Unplug lines per item 7.13 Turn on pump.
Increase of pressure on filters (>15 psi)	Filter is plugged. Valve in filtrate line to Tank F1-610 or to the General Sump is closed.	Wash filter and precoat. Open valve.
Dimple check of filtrate shows uranium	Bad precoat. Grommets are bad. pH of slop water is too high. Feed rate is too fast. Hole in filter screening. Dirty filter. Cold slop water.	Clean and precoat filter. Disassemble filter and replace grommets. Bring the pH down at the Slop Water Hold Tanks. Slow feed rate. Repair or replace screen. Clean and precoat filter. Receiving Tanks are to be heated to 150°F, minimum.

MATERIAL REVISED, ADDED, OR DELETED

7.0 PROCEDURE (cont.)

TABLE 1 (cont.)
TROUBLESHOOTING GUIDE

Condition	Possible Cause (s)	Correction
The pH of Tank F1-609. F1-610 or F2E-602 has dropped	Not pumping MgO to Tanks 609 and 610 fast enough. Plugged MgO recycle line. MgO slurry is too thick. Automatic valves not operating. pH probe not working in tank.	Increase timer on ODS pump Blow out lines per Item 7.13. Add water to slurry. Call Maintenance. Call Instrument Shop.
RTS is not received in General Sump Tank #5.	G2E-603 pump is not operating. Line into thickener is plugged. Line to Tank #5 is plugged.	Start pump, check for plugged valves, check for damaged diaphragm. Put air on the line. Clean out line per Item 7.13.

R - MATERIAL REVISED, ADDED, OR DELETED.

7.0 PROCEDURE (cont.)

7.6.6 Close the Inlet Valve between Tank F1-616 and precoated filter.

7.6.7 Shut off Precoat Slurry Pump G1-629.

NOTE

Opening the valve increases pressure on the filter.

7.6.8 Open valve between Pump G2E-602 or G2E-606 and the filter.

NOTE

At this point the Refinery Sump is on "RECYCLE". The supervisor may advise the operator to put the operation on recycle for short periods.

NOTE

More than one filter can be operated at a time.

7.6.9 Slowly open the valve between precoated filter and F1-610 Precipitation Tank. Ensure that there is a gradual drop in pressure.

7.6.10 Take four ounces of filtrate from the sample line between precoat filter(s) and Precipitation Tank F1-610.

7.6.11 Check the filtrate for uranium as follows:

NOTE

The supervisor shall obtain a dimple tray, eye dropper, and required reagents from the laboratory and provide the items to the operator.

7.6.11.1 Notify the supervisor that a dimple test for uranium is required.

7.6.11.2 Fill the eye dropper with filtrate from the four-ounce sample.

7.6.11.3 Place ten drops of filtrate into a depression in the dimple tray.

7.6.11.4 Add three drops of potassium ferrocyanide to the filtrate.

7.6.11.5 Add three drops of acetic acid.

MATERIAL REVISED, ADDED, OR DELETED

7.0 PROCEDURE (cont.)

NOTE

If the sample material turns light yellow or light green, the filtrate does not contain detectable uranium. Brown or dark green indicates the presence of uranium.

7.6.11.6 Check the color of the filtrate against the color standard to determine if uranium is present.

7.6.12 If the filtrate contains uranium, proceed as follows:

7.6.12.1 Continue recycling for 15 to 30 minutes and repeat Steps 7.6.10 and 7.6.11.

7.6.12.2 If the test result is still positive, switch to another filter.

7.6.12.3 Recycle filtrate for an additional 30 minutes and repeat Steps 7.6.10 and 7.6.11.

7.6.12.4 If the test results are positive, notify the supervisor and proceed in accordance with the Trouble Shooting Guide (Refer to Table 1).

7.6.13 If the sample test shows that the filtrate is free of uranium, place remaining sample material into a quart composite sample jar.

7.6.14 Inform the General Sump Operator that General Sump Filtrate Hold Tank No. 1 or No. 3 is to be opened.

7.6.15 Take a reading of the Refinery Sump to General Sump Filtrate Integrator. Record the reading in the "Refinery Sump Log", Form FMPC-PRO-774 (See Figure 2).

7.6.16 Open the valve on filtrate line to the General Sump.

7.6.17 Close the valve between filtrate line and Precipitation Tank F1-610.

7.6.18 Start Pump G1-609 or G2E-601.

7.6.19 Check the thickener level in the outer ring of Tank F2E-602. Adjust the Thickener Level Control to raise or lower level as needed.

7.6.20 Every 30 minutes, sample the filtrate and repeat the dimple test (Refer t Steps 7.6.10 and 7.6.11).

D - MATERIAL REVISED, ADDED, OR DELETED.

7.0 PROCEDURE (cont.)

7.6.20.1 If filtrate turns light yellow or light green, increase feed rate.

7.6.20.2 If filtrate turns brown or dark green, recycle filter through Tank F1-610 and proceed per the "Trouble Shooting Guide" (Refer to Table 1).

7.6.21 Check that Magnesia Slurry Make-Up Tank F1-617 is more than one-half full.

7.6.21.1 If the tank is one-half full or less, add $MgOH_2$ slurry from the storage tank until the level is two feet below top of tank.

7.7 Operating Refinery Sump on Recycle

7.7.1 Open the valve to Precipitation Tank F1-610. Close the valve on the filtrate line to General Sump.

7.7.2 Shut off Pump G1-609 or G2E-601. Close valves between Precipitation Tank F1-609 and Tank F2E-601 or F1-608.

7.7.3 Slow feed rate from F1-610 Precipitation Tank to F2E-601 Thickener Tank.

7.7.4 Turn off RTS - ODS Pump G2E-603. Clean the lines (Refer to Item 7.13).

7.7.5 To return to normal operation, proceed per Step 7.6.9.

7.8 Shutting Down Refinery Sump

7.8.1 Put the Refinery Sump on recycle (Refer to Item 7.7).

NOTE

Pressure will keep precoat on filter after valves are closed.

7.8.2 Close outlet and inlet valves to filter(s) being operated.

7.8.3 Shut off Pump G2E-602 or G2E-606 and Pump G1-610 or Pump G1-611.

7.8.4 Shut off MgO ODS Pumps to Tanks F1-609 and F1-610.

7.8.5 Shut off seal water to pumps.

7.8.6 Drain and clean lines (Refer to Item 7.13).

168

7.8.7 Obtain two sample containers. Take an 8 ounce sample from the quart composite sample jar. Place the sample into a container. Repeat for second container.

7.0 PROCEDURE (cont.)

7.8.8 Record date, time, sample number, and type of material on "Sample Log Sheet," Form FMPC-PRO-232 (See Figure 3).

7.8.9 Fill out a "Report of Chemical Analyses", Form FMPC-T-200 (See Figure 4). Record material, account number, date, sample submitted by, and sample number. Request analysis of U lb/gal, Cu ppm, and pH.

7.8.10 Label the sample containers. Send one container, with "Report of Chemical Analyses" to Laboratory. Retain the second sample container.

7.8.11 Complete "Refinery Sump Log", Form FMPC-PRO-884 (See Figure 2) with the status of the equipment and material at the end of the shift.

7.9 Processing and Discharging Thickener Under Flow

7.9.1 Turn on air to ODS Pump G2E-603.

7.9.2 Aline valves from Tank F2E-602 to Tank #5 in the General Sump.

7.9.3 Turn on ODS Pump G2E-603. Adjust the underflow pump rate as required to process the thickener slurry at Plant 8.

7.9.4 Ensure that thickener is discharged into Tank #5. No flow indicates a plugged line. Shut off Pump G2E-603 and proceed per the "Trouble Shooting Guide" (Refer to Table 1).

7.9.5 When RTS transfer is completed, flush the line with process water, close valves to Tank 5, and shut off the ODS Pump.

7.10 Backflushing Residues from Enzinger Filters

7.10.1 Close the Precoat Filter Inlet and Outlet Valves.

7.10.2 Open the Air Line Inlet Needle Valve at bottom of filter to agitate mixture and break up solid material.

7.10.3 Open outlet valve between filter and Pump G1-630 or G1-637.

7.10.4 Open valves between precoat filters(s) and Tank F1-608 or F2E-601.

7.10.5 Closing remaining filter valves.

7.10.6 Start Pump G1-630 or G1-637. Transfer liquid from filter to Receiving Tank F1-608 or F2E-601.

D - MATERIAL REVISED, ADDED, OR DELETED.

7.0 PROCEDURE (cont.)

7.10.7 When precoat filter is empty, shut off pump and close valves between filter and receiving tank.

7.10.8 Open valves between Nitric Acid Tank F1-613 and Precoat Filter.

7.10.9 Start Pump G2-612. Transfer 1-1/2 inches of acid from Tank F1-613 to the filter.

7.10.10 Close outlet valve on Tank F1-613. Open water valve to inlet of Pump G2-612. When filter is full, turn off water and shut off the pump.

7.10.11 Open vent line between top of filter and top of Tank F1-616.

7.10.12 Start Pump G1-630 or G1-637, open Tank F1-608 or F2E-601 Inlet Valve, and transfer slurry from filter to Tank F1-608 or F2E-601.

7.10.13 When filter is empty, shut the Air Line Needle Valve and check filter for cleanliness.

7.10.14 If filter is not clean, repeat Steps 7.10.2 and 7.10.8 thru 7.10.13.

7.10.15 After filter is clean, close valves between filter(s) and receiving tanks.

7.10.16 Shut off Pump G1-630 or G1-637 and close the Filter Outlet Valve and the Pump Discharge Valve.

7.10.17 Close valves between Tank F1-613 and precoat filters.

7.10.18 Precoat the filter (Refer to Item 7.3).

7.11 Cleanout of Sump System

7.11.1 Empty the Thickener Tank as follows:

7.11.1.1 Aline valves to pump contents of Tank F2E-602 to General Sump Tank #5.

7.11.1.2 Start Pump G2E-603.

7.11.1.3 Observe Tank F2E-602. When the tank is empty, shut off Pump G2E-603. Close the outlet valve.

REVISED, ADDED, OR DELETED

7.0 PROCEDURE (cont.)

7.12 Cleaning Out Thickener

NOTE

Two methods may be used to transfer the liquid.

7.12.1 Remove clear liquid from Tank F2E-602 Thickener.

7.12.1.1 Using a portable pump, transfer liquid from the inner ring to the outer ring of Tank F2E-602. Start Pump G2E-602 or G2E-606 to move the liquid to the filters (Refer to Steps 7.6.10 thru 7.8.11).

7.12.1.2 Using Pump G2E-603, transfer solids to General Sump Tank #5 until liquid clears and then shut off the pump. Using Pump G2E-602 or G2E-606, pump the clear liquid to the filters (Refer to Steps 7.6.10 thru 7.8.11).

7.12.2 Remove RTS solids from bottom of Thickener Tank as follows:

7.12.2.1 Connect a firehose to a water source.

7.12.2.2 Open valves between Thickener Tank F2-602 and Tank #5.

7.12.2.3 Start Pump G2E-603.

7.12.2.4 Use the fire hose to loosen solids from sides of the Thickener Tank, break the solids into small pieces, and wash to center of tank.

7.12.2.5 Observe liquid in Tank F2E-602. If level rises the line may be plugged. Clean the lines (Refer to Item 7.13).

7.12.2.6 Hose out the Thickener Tank Outer Ring.

7.12.2.7 When the tank is clean, shut off Pump G2E-603. Clean the lines between Thickener and RTS Tank, and RTS Tank and Digestion (Refer to item 7.13).

7.13 Cleaning Out Lines

CAUTION

STEAM SHALL NOT BE USED TO BLOW OUT LINES WHICH CONTAIN MgO OR RTS. STEAM WILL DRY OUT THE PLUG. STEAM MAY BE USED MOMENTARILY TO LOCATE THE PLUG.

7.13.1 Open valves on line to be cleaned.

MATERIAL REVISED, ADDED, OR DELETED.

7.0 PROCEDURE (cont.)

7.13.2 If permanent steam/air/water line is available, open the valve to the line being cleaned. Check to make sure both ends of the line are clear.

7.13.3 If no permanent water/steam/air supply is available, connect a hose, using proper fittings and clips, between the supply source and the line to be cleaned. Open the valve to the line being cleared. Check to make sure both ends of the line are clear.

8.0 APPLICABLE FORMS

8.1 FMPC-PRO-774, "Refinery Sump Log"

8.2 FMPC-PRO-232, "Sample Log Sheet"

8.3 FMPC-T-200, "Report of Chemical Analyses"

PERSONNEL REVISED, ADDED, OR DELETED

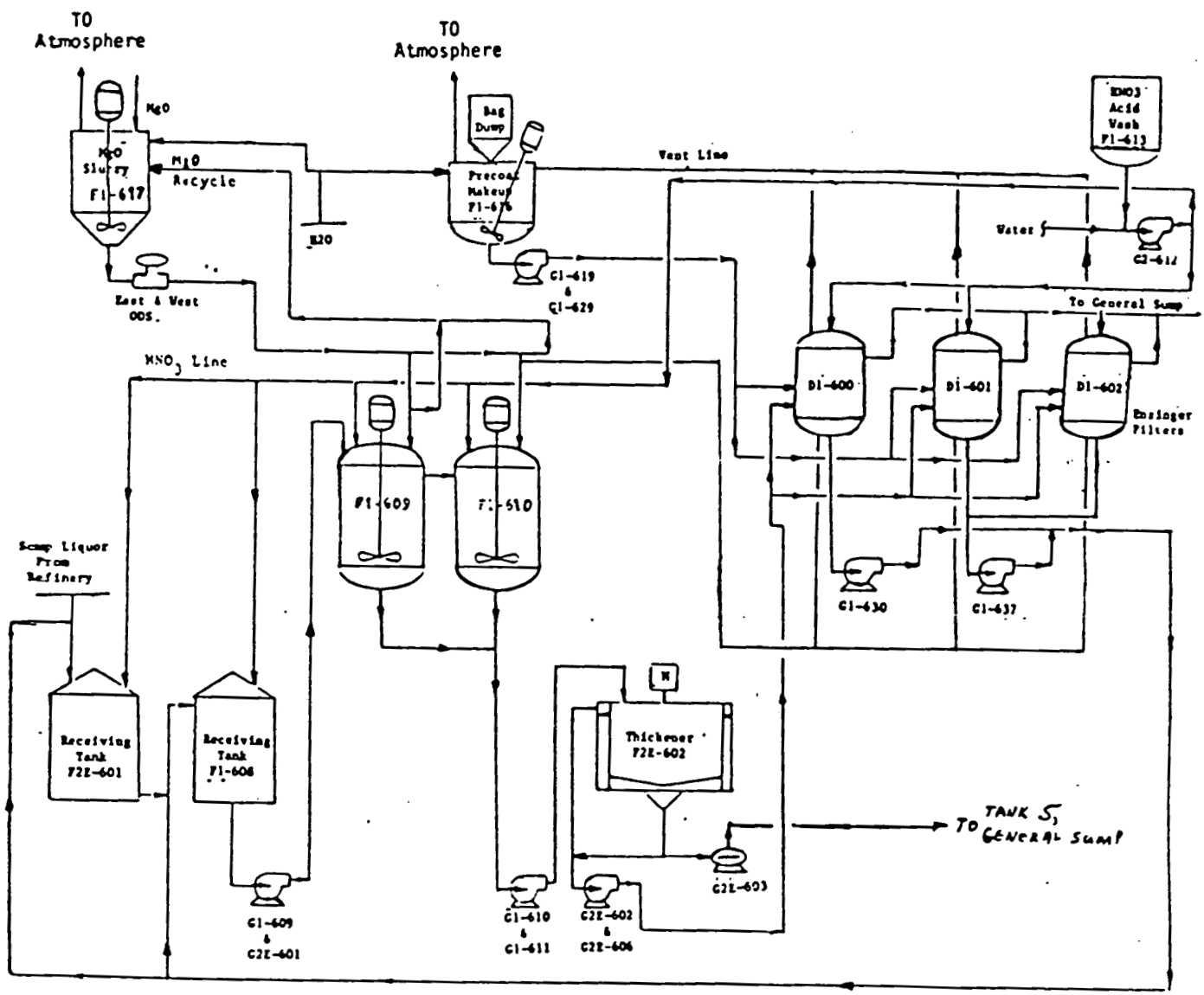

REFINERY SUMP FLOW DIAGRAM
Figure 1

R - MATERIAL REVISED, ADDED, OR DELETED.

FMPC

PRODUCTION DIVISION - ORE REFINERY

REFINERY SUMP LOG

Operator _____ Date _____

EQUIPMENT STATUS (DRAGGE GALS.)			
TANK NO.	3 PM	11 PM	7 AM
F2E-601			
F1-608			
F1-609			
F1-610			
F1-612			
F1-613			
F1-616			
F1-617			
Receiving In			
Isolated	☐Yes ☐No	☐Yes ☐No	☐Yes ☐No

MATERIAL STATUS									
MATERIAL	ON HAND			USED			RECEIVED		
	3 PM	11 PM	7 AM	3 PM	11 PM	7 AM	3 PM	11 PM	7 AM
MgO									
Dicalite									
HNO_3									

DOS PUMP - SHIFT STATUS		
SHIFT 1	SHIFT 2	SHIFT 3
☐ Operating	☐ Operating	☐ Operating
Down @ _____	Down @ _____	Down @ _____

CAKE SLURRY % SOLIDS (AFTER TANK SAMPLES TAKEN)			

PROCESSING DATA

RECEIVER TANKS							
F1-606				F2E-601			
TIME	pH	TEMP	ORGANIC LAYER	TIME	pH	TEMP	ORGANIC LAYER

ORGANIC REMOVED				
TIME	TANK NO.	GALLONS	SAMPLE NO.	DISPOSITION
TOTAL GALS.				

Remarks: _____

EXCHANGER FILTER EFFLUENT TO GENERAL SUMP: Shift 1 _____ Shift 2 _____ Shift 3 _____

F10-3 STATUS		
TIME	GALLONS	
0700		
1500		
2300		
0700		

CAKE SLURRY TO PLT. 8	
GALLONS	BATCH NO.

THICKENER OUTER RING OK	
TIME	pH

FILTER STATUS

ON STREAM (CHECK ✓)				CLEANED (CHECK ✓)			
D1-600	D1-601	D1-602	TIME CHANGED	D1-600	D1-601	D1-602	TIME CLEANED

NO.	DISTRIBUTION OF COPIES
1	Production Records - Plant 3 (RECORD COPY)

REFINERY SUMP LOG
FMPC-PRO-774
Figure 2

D MATERIAL REVISED, ADDED, OR DELETED.

FMPC

ORE REFINERY - REFINERY SUMP

SAMPLE LOG SHEET

Units - ( ) lb/gal unless otherwise noted.

DATE	TIME	SAMPLE NUMBER	SAMPLE POINT	BATCH NO. OR GALLONS	TYPE OF MATERIAL	TOTAL U	SOL. U	INSOL. U	ACID Normality	WT % U	OIL	WT % SOLIDS	Cl	% U-235 Isotopic	pH	OTHER*

NO.	DISTRIBUTION OF COPIES
1	Prod. Records - Ore Refinery (ORIGINAL COPY)

* Use this space for items of special analysis.

SAMPLE LOG SHEET
FMPC-PRO-232
Figure 3

R - MATERIAL REVISED, ADDED, OR DELETED.

FMPC-T-200

REPORT OF CHEMICAL ANALYSES

(NOTE: Write Firmly – Part 4 must be legible.)

Lab. Nos. _____

Lot No. _____

Analyses Requested _____

MATERIAL:

PLANT NO.:

DATE SAMPLED:

SUBMITTED BY:

REMARKS:

LAB. NO.	IDENTIFICATION	ANALYTICAL DATA					

NO.	DISTRIBUTION OF COPIES
1	Originator
2	Extra Copy
3	Quality Control Department
4	Analytical Dept. (RECORD COPY)

Approved By _____ Date of Report _____

REPORT OF CHEMICAL ANALYSES
FMPC-T-200
Figure 4

D MATERIAL REVISED, ADDED, OR DELETED.

RECORD OF ISSUE/REVISIONS

PAGE	DATE	DESCRIPTION AND AUTHORITY
ALL	03-02-65	Issued.
ALL	02-17-67	Reissued.
3	04-11-68	Deleted NOTE at beginning of Item 4.
7	04-11-68	Deleted former Item 8.3. Revised Item 8.2 to include F1-608 and F2E-601 tanks. Deleted former Item 8.10 and NOTE. Renumbered remaining items.
8	04-11-68	Added new Items 9 & 10 and renumbered former Item 9 as Item 11.
8a	04-11-68	Added to include carryover. All above changes per L. M. Levy.
1	06-07-68	Revised handling of degraded solvent and pH of heated slop in 2nd paragraph under "Description".
3	06-07-68	Revised Item 4.1 to correct error in destination of portable slop tank and added "NOTE" regarding handling of good solvent.
8	06-07-68	Added Item 9.7 on disposition of portable tank.
ALL	12-09-68	Eliminated duplication of specifications given in Mfg. Spec. 2-BE-460-1, Section 3. Added procedure for making in-plant determination of wt. % solids in thickener underflow, Item 7.1. Clarified wording throughout SOP.
ALL	11-03-72	Complete revision ordered by J. Beckelheimer and prepared by F. C. Tritschler and B. Emison with him. Description and SOP revised to eliminate the alternative of routing RTS to Plant 8. Drawing (now page 9) revised.
1	09-06-73	Requirement that Plant 8 slop containing thorium be processed in Plant 8 deleted.
3	09-06-73	Temperature of 170°F for slop liquor in F2E-601 changed to a range of 160-170°F.

R - MATERIAL REVISED, ADDED, OR DELETED.

RECORD OF ISSUE/REVISIONS (cont.)

DATE	REV NO.	DESCRIPTION AND AUTHORITY
09-06-73	N/A	Target for pH of less than 1.0 specified. Note added to indicate that pH cell set up must be checked.
04-09-76	N/A	Changed to refer to pumps instead of educators.
04-09-76	N/A	Temperature range rather than a temperature specified.
04-09-76	N/A	Definite article "the" rather than "as" required.
04-09-76	N/A	Note added underlining fact that water is to be added before any MgO is introduced.
04-09-76	N/A	Break point for disposition of U infiltrate changed from 0.02 to 0.048 g/l.
04-09-76	N/A	Renumbered from 7.1.3.3 after deletion of overnight settling requirement for slurry in F1-612.
04-09-76	N/A	General updating specified by Eli Nutter in request for Change in Standard Operating Procedure No. 143.
03-13-89	N/A	Reissue of procedure per Request No. P86-066, initiated by T. N. Huey and Request P87-057, initiated by W. D. Eager.
04-10-91	0	Reissued to delete data that no longer applies, and correct tank content destination per Request No. P90-678, initiated by J. B. Patton.

D MATERIAL REVISED, ADDED, OR DELETED.

1.0 PURPOSE

The purpose of this document is to establish the procedure for filtering thickener underflow received from Plant 2/3.

2.0 APPLICABILITY

This procedure is applicable to the filters and associated equipment used to process refinery thickener underflow (RTU) to remove uranium.

3.0 RESPONSIBILITIES

3.1 Supervisors shall be responsible for the following:

3.1.1 Ensuring that personnel are qualified per the established training requirements identified by the Department/Staff Manager.

3.1.2 Contacting Radiological Safety and/or Industrial Hygiene to determine appropriate respiratory protection for the process being performed.

3.1.3 Providing operators with the required respiratory protection.

3.1.4 Contacting Maintenance when repairs are required.

3.1.5 Reviewing applicable Material Safety Data Sheets with the operator(s).

3.2 Operators shall be responsible for complying with this procedure.

4.0 DEFINITIONS

None

5.0 REFERENCES

5.1 SOP 8-C-104, "Makeup of Precoat Slurry and Precoating Rotary Vacuum Filters"

5.2 MS 8-BN/E-490-2, "Disposal of Waste Filtrate and Effluents"

5.3 FMPC-2178, "Lot Marking and Color-Coding System"

6.0 INDUSTRIAL HEALTH AND SAFETY REQUIREMENTS

6.1 A defined safety system is not involved.

6.2 Leather-palm gloves shall be worn when operating equipment or while handling sharp edged or abrasive material and metal drums.

6.0 INDUSTRIAL HEALTH AND SAFETY REQUIREMENTS (cont.)

6.3 Chemical resistant gloves shall be worn while taking samples and performing pH and dimple tests.

6.4 Safety glasses shall be worn unless additional eye protection is specified by the supervisor, IRS&T, or posted signs.

6.5 Respiratory protection provided by the supervisor shall be worn when required by IRS&T.

6.6 A "weep" hole for pressure equalization shall be kept open in filter drum head.

6.7 Floor area at tanks and the filter equipment shall be clean and dry. Spills shall be cleaned as soon as the spill occurs.

6.8 A guarded, self-closing knife shall be used to open material bags. The bag shall be cut in a direction away from the body.

6.9 When working near the knife mechanism, the filter drum shall be stopped and away from the knife.

6.10 Any circumstance which could have resulted in an intake of radioactive materials by inhalation, ingestion or absorption shall immediately be reported to a supervisor. The supervisor shall immediately report the circumstance of possible radioactive materials intake to IRS&T Radiological Safety Section for evaluation. The involved personnel shall report to the Urine Sampling Station at the end of their shift to complete a Investigation Report (IRR) (Form FMPC-ES&H-1458), and submit an incident urine sample. The involved personnel shall also report to the Urine Sampling Station at the start of their next shift to submit a followup urine sample. Employees are responsible for complying with additional requirements as specified by the Radiological Safety Section.

R - MATERIAL REVISED, ADDED, OR DELETED.

NOTE

WARNINGS, CAUTIONS, and NOTES precede the Step or Item to which they apply.

7.0 PROCEDURE

7.1 Preparation

NOTE

The supervisor shall ensure that transfer valving preparations are correct and that the transfer line is checked for leakage during pumping.

7.1.1 Open the Inlet Valve on Tank 203 or 203A per the supervisors instructions.

7.1.2 Call the General Sump Operator and request that slurry be pumped to Plant 8.

7.1.3 Start the agitator in the tank being used.

7.1.4 Check the tank to ensure that the slurry is being received.

7.1.4.1 If slurry is not being received, notify the General Sump Operator.

7.1.5 Monitor the tank content using the sight glass.

7.1.6 When the tank is three-fourths full, notify the General Sump to discontinue pumping slurry.

7.1.7 Obtain an empty drum premarked per FMPC-2178 for filter cake.

7.1.8 Place the drum on the conveyor.

7.1.9 Adjust the drum position under the discharge chute of the East Eimco filter.

7.1.10 Check Filtrate Hold Tank 25A to insure that there is available capacity for the filtrate to be pumped from the east Eimco filter.

7.1.11 Aline Valves between Filtrate Pump G43-107, G43-108, or G43-109 and the East Eimco Filter.

7.1.12 Make up filter precoat slurry and precoat East Eimco Filter D43-105 (Refer to SOP 8-C-104).

R - MATERIAL REVISED, ADDED, OR DELETED.

7.0 PROCEDURE (cont.)

7.2 Filtering Uranium Slurry

7.2.1 Check weep hole at end of filter

7.2.1.1 If the weep hole is clogged, clean the hole with wire.

NOTE

The vacuum pump keeps the precoat layer on the filter drum.

7.2.2 Ensure that NASH vacuum pump G43-113/G43-114A is operating (Refer to 8-C-104).

7.2.3 Aline Valves to the OLIVER Diaphragm Slurry (ODS) Pump(s) to be used (North or South).

7.2.4 Open the Discharge Valve from the tank to be filtered to the North and/or South ODS Pump.

7.2.5 Open the Outlet Valve from the North and/or South ODS Pumps.

7.2.6 Start the Timer.

7.2.7 After precoating, slow the filter drum speed to 0.5 RPM.

7.2.8 Observe the filter. If liquid is not flowing into the basin, proceed as follows:

7.2.8.1 Using compressed air, blow out the lines from the ODS pump to the filter.

7.2.8.2 Using compressed air, blow out the lines from the Feed Tank to the ODS Pump.

7.2.8.3 Check the flow into the basin. If there is no flow, notify the supervisor.

7.2.9 Set the knife advance mechanism on the Eimco Filter for a light precoat cut.

7.2.10 Lock the feeder regulator hand crank for the knife advance mechanism.

7.2.11 Press the Scraper Drive START pushbutton.

R - MATERIAL REVISED, ADDED, OR DELETED.

7.0 PROCEDURE (cont.)

NOTE

Water flow rate from spray nozzles will be adjusted after nitrate concentration of the filter cake is determined.

7.2.12 Turn on water spray.

7.2.13 Take a four ounce sample of filtrate.

7.2.14 Check the filtrate for uranium as follows:

NOTE

The supervisor shall obtain a dimple tray, eye dropper, and required reagents from the laboratory and provide the items to the operator.

7.2.14.1 Notify the supervisor that a dimple test for uranium is required.

7.2.14.2 Fill the eye dropper with filtrate from the four-ounce sample.

7.2.14.3 Place ten drops of filtrate into a depression in the dimple tray.

7.2.14.4 Add three drops of potassium ferrocyanide to the filtrate.

7.2.14.5 Add three drops of acetic acid.

NOTE

If the sample material turns light yellow or light green, the filtrate does not contain detectable uranium. Brown or dark green indicates the presence of uranium.

7.2.14.6 Check the color of the filtrate against the color standard to determine if uranium is present.

7.2.15 If the filtrate contains uranium, proceed as follows:

7.2.15.1 Check the pH of the liquid being filtered.

7.2.15.2 Check the pH of the filter precoat.

7.2.15.3 Notify the supervisor and proceed as directed.

R - MATERIAL REVISED, ADDED, OR DELETED.

7.0 PROCEDURE (cont.)

7.2.16 When the dimple test is negative and Filtrate Hold Tank 25A is full, put the filter on standby per Item 7.3.

7.2.17 Start the agitator in Tank 25A.

7.2.18 Take two four-ounce dip samples from Tank 25A.

7.2.19 Record the date, time, sample number and tank number on a "Sample Log Sheet", Form No. FMPC-OPR-1632 (See Figure 2).

7.2.20 Complete a "Report of Chemical Analysis", Form No. FMPC-T-200 (See Figure 3).

7.2.20.1 Record material type account number, date, submitted by, and sample number.

7.2.20.2 Request analyses for U lb/gal, Cu ppm, and pH.

NOTE

If lab results show that filtrate is in-specification for U lb/gal, Cu, and pH (Refer to MS 8-BN/E-490-2), the supervisor shall direct that filtrate be pumped to the General Sump.

7.2.21 After notification by the supervisor that the filtrate is in-specification, pump the filtrate as follows:

7.2.21.1 Call the General Sump and request permission to pump filtrate.

7.2.21.2 When the General Sump Operator grants permission, pump the filtrate to the General Sump.

NOTE

If lab results show that filtrate is out-of-specification (Refer to MS 8-BN/E-490-2) the supervisor shall direct that the filtrate be pumped to a Digestor tank.

7.2.22 After notification by the supervisor that the filtrate is out-of-specification, proceed as follows:

7.2.22.1 Sample the tank.

7.2.22.2 Send the sample for analyses per Steps 7.2.19 thru 7.2.21.

R - MATERIAL REVISED, ADDED, OR DELETED.

7.0 PROCEDURE (cont.)

7.2.22.3 If sample results still indicate that filtrate is out-of-specification, pump filtrate to a Digestor Tank (D101, D102, D103, D104, or D105).

7.2.23 If the General Sump can not receive in-specification filtrate and Tank 25A is full, proceed as follows:

7.2.23.1 If the delay is temporary, place the system on standby per Item 7.3.

7.2.23.2 If the delay will be extensive, shut down per Item 7.4.

7.2.24 When the product drum is full, proceed as follows:

7.2.24.1 Remove the full drum.

7.2.24.2 Place a color-coded, premarked drum (Refer to FMPC-2178) under the chute.

7.2.24.3 Install a lid and lock ring on the filled product drum.

WARNING

IF THE MATERIAL ON THE DRUM IS DRY, WEAR A RESPIRATORY PROTECTION PROVIDED BY THE SUPERVISOR WHEN WIPING DRUMS.

7.2.24.4 Using a clean rag, remove all material on the outside of the drum.

7.2.24.5 Place the rags in a drum that is color-coded for contaminated trash (Refer to MS 8-BN/E-490-2).

7.2.25 Using a handstacker, place the filled drum on a clean skid for shipment or processing.

7.2.26 Ensure that drum is identified with a 15-digit code per FMPC-2178.

7.2.27 Secure the drum to the skid with an approved strap.

7.3 Placing the Filter on Standby

7.3.1 Shut off the North and/or South ODS Pump.

7.3.2 Close the valves from the Feed Tank.

R - MATERIAL REVISED, ADDED, OR DELETED.

7.0 PROCEDURE (cont.)

7.3.3 Shut off the water spray.

NOTE

The rotating drum, with vacuum applied, will continue to pick up residual slurry from the filter bowl to seal the drum surface.

7.3.4 Stop the knife drive.

7.3.5 Retract the knife blade.

NOTE

When the Filtrate Pump is shut off, filter will be on STANDBY.

NOTE

The pickup and drying vacuum shall remain "ON" to keep the precoat from falling off the drum. The agitator shall be "ON" to keep solids from settling in the Filter Basin and causing the agitator to become restricted.

7.3.6 Shut off the Filtrate Pump (G43-107, G43-108, or G43-109) being used.

7.4 Shutting Down Filter Operation

7.4.1 Perform Steps 7.3.1 thru 7.3.5.

7.4.2 Fill the basin with water to slurry the residual solids.

7.4.3 Shut off NASH Vacuum Pump G43-113/G43-114A.

7.4.4 Open the Filter Basin Valve in lines connected to Tank F-104.

7.4.5 Wash residual precoat and solids from the filter and filter basin into Tank F-104 until the filter and filter basin are completely clean.

7.4.6 Shut off the filter basin agitator drive.

7.4.7 Stop drum rotation.

7.4.8 Shut down the Filter Exhaust Hood.

7.4.9 Close the valves in the lines between the filter basins and tank F-104.

7.0 PROCEDURE (cont.)

7.5 Emergency Shutdown

7.5.1 Shut off North and/or South ODS Pumps.

7.5.2 Stop the knife drive.

8.0 APPLICABLE FORMS

8.1 FMPC-OPR-1632, "Sample Log"

8.2 FMPC-T-200, "Report of Chemical Analyses"

SITE SERVICES PROCEDURE	FILTERING REFINERY THICKENER UNDERFLOW	SOP 8-C-116 AREA: Plant 8
Authorization: R. L. Gardner, Facilities and Warehousing	Supersedes: None	Issue Date: 07-05-91

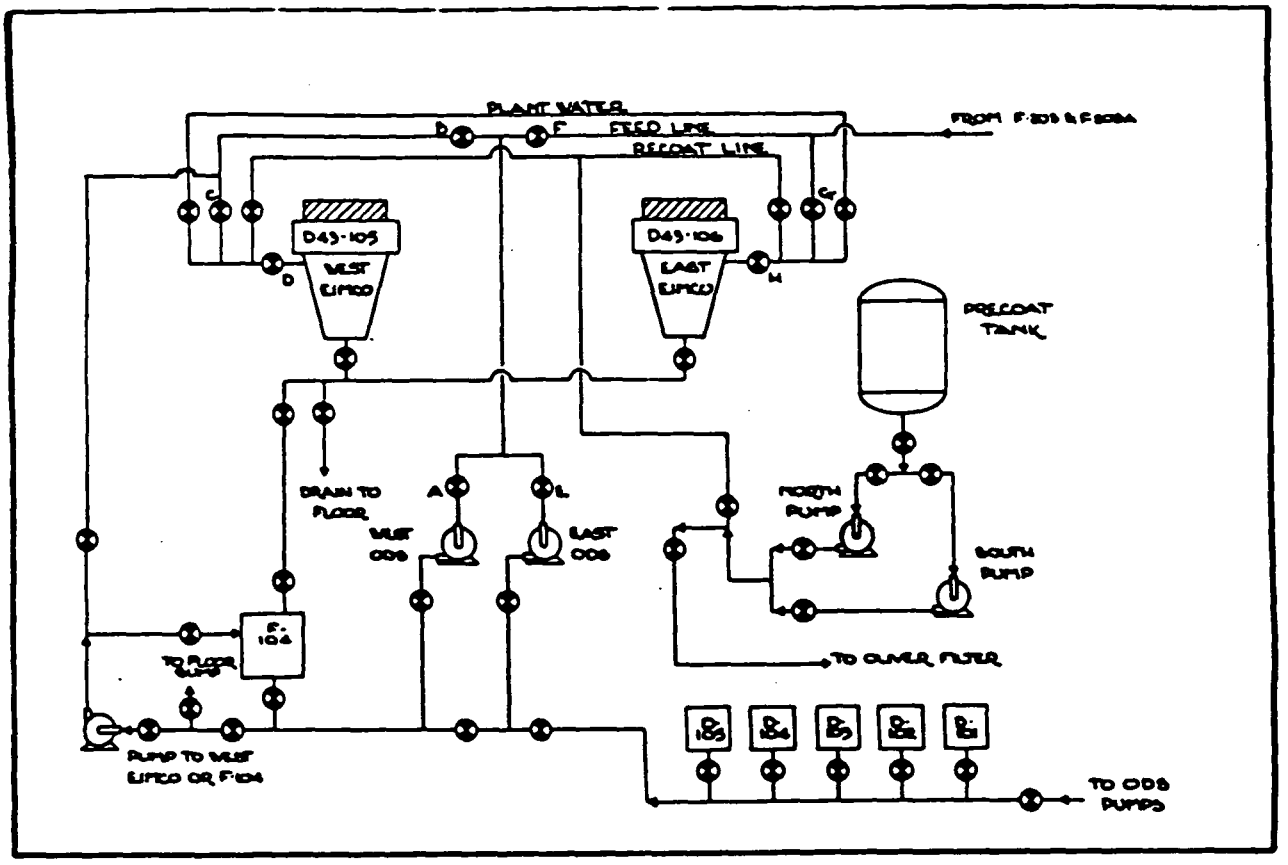

FILTER FLOW DIAGRAM
Figure 1 (sheet 1 of 2)

R - MATERIAL REVISED, ADDED, OR DELETED.

SITE SERVICES PROCEDURE	FILTERING REFINERY THICKENER UNDERFLOW	SOP 8-C-116 AREA: Plant 8
Authorization: R. L. Gardner, Facilities and Warehousing	Supersedes: None	Issue Date: 07-05-91

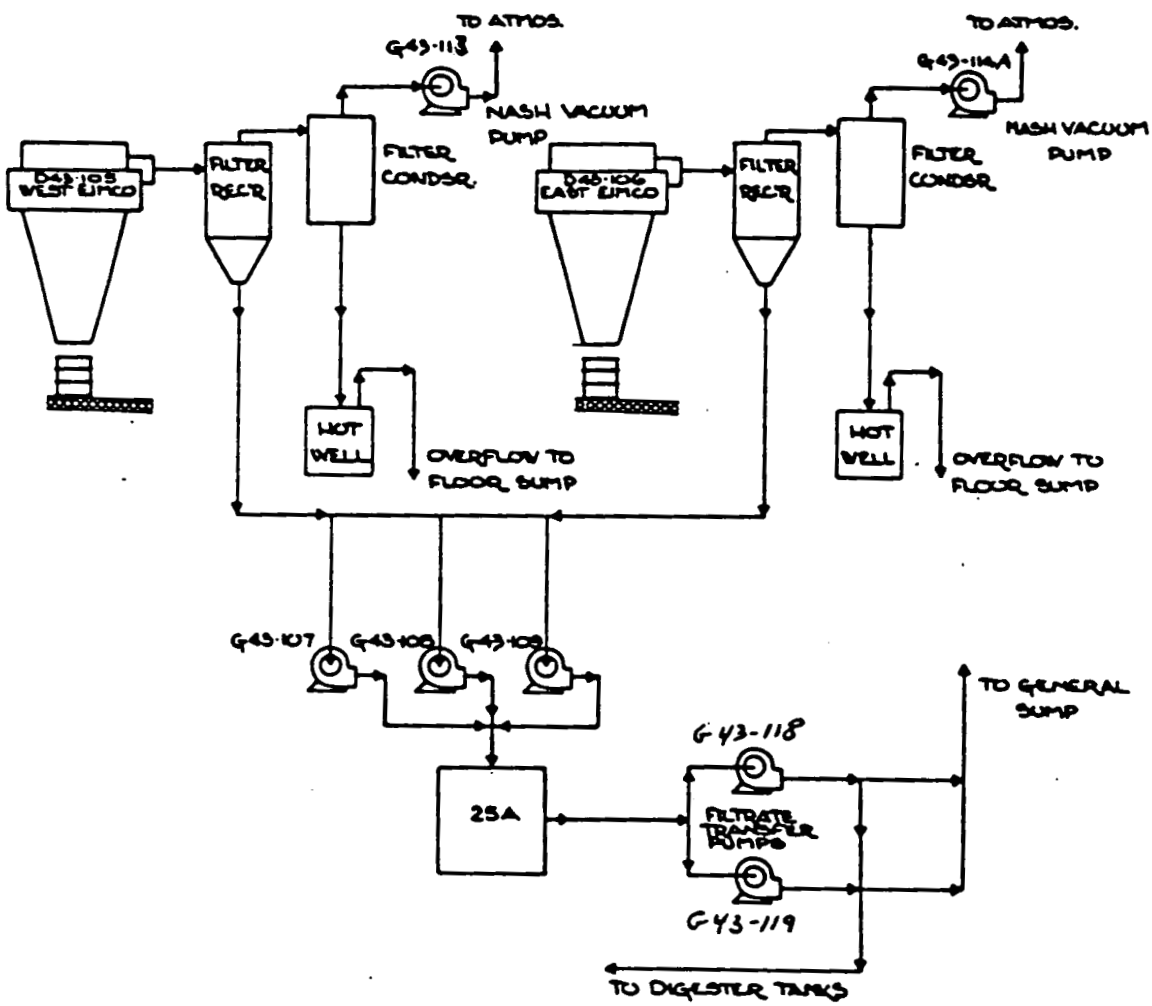

FILTER FLOW DIAGRAM
Figure 1 (sheet 2 of 2)

R - MATERIAL REVISED, ADDED, OR DELETED.

FMPC

RECOVERY PLANT - PLANT 8

SAMPLE LOG

(For Samples Submitted to Analytical Dept.)

SAMPLE NUMBER	TIME SAMPLE TAKEN	DATE	TANK, DIGESTER OR MATERIAL	ANALYSES			TIME ANALYSES RECEIVED

NO.	DISTRIBUTION OF COPIES
1	Area Foreman - Pit. 8. (RECORD COPY)

SAMPLE LOG
FMPC-OPR-1632
Figure 2

R - MATERIAL REVISED, ADDED, OR DELETED.

SITE SERVICES PROCEDURE	FILTERING REFINERY THICKENER UNDERFLOW	SOP 8-C-116 AREA: Plant 8
Authorization: R. L. Gardner, Facilities and Warehousing	Supersedes: None	Issue Date: 07-05-91

FMPC
REPORT OF CHEMICAL ANALYSES
(NOTE. Write Firmly — Part 4 must be legible)

FMPC-T-200 (REV 5 & 88)

Lab. Nos. _____

Lot No. _____

Analyses Requested _____

MATERIAL

ACCOUNT NO

SAMPLED

SUBMITTED BY

REMARKS

LAB. NO.	IDENTIFICATION	ANALYTICAL DATA					

NO	DISTRIBUTION OF COPIES
1	Originator
2	Extra Copy
3	Quality Assurance
4	Analytical (RECORD COPY)

Approved By _____ Date of Report _____

REPORT OF CHEMICAL ANALYSES
FMPC-T-200
Figure 3

R - MATERIAL REVISED, ADDED, OR DELETED.

SITE SERVICES PROCEDURE	FILTERING REFINERY THICKENER UNDERFLOW	SOP 8-C-116 AREA: Plant 8
Authorization: R. L. Gardner, Facilities and Warehousing	Supersedes: None	Issue Date: 07-05-91

RECORD OF ISSUE/REVISIONS

DATE	REV. NO	DESCRIPTION AND AUTHORITY
07-05-91	0	SOP for Filtering Refinery Thickener Underflow required per Request No. P90-693, initiated by J. Patton.

R - MATERIAL REVISED, ADDED, OR DELETED.

OPERATIONS PROCEDURE	FILTRATION OF URANIUM BEARING SLOPS	SOP 8-C-115 2344 AREA: Plant 8
Authorization: Signature on File R. L. Gardner, Manufacturing	Supersedes: 8-C-115 04-10-86	Issue Date: 08-08-90

1.0 PURPOSE

The purpose of this document is to provide the procedure for precipitating and filtering uranium from Chemical Plant waste water.

2.0 APPLICABILITY

This procedure is applicable to the filtration operation in Plant 8.

3.0 RESPONSIBILITIES

3.1 Supervisors shall be responsible for the following:

3.1.1 Contacting Industrial Hygiene or Radiological Safety to determine the appropriate respiratory protection for the process being performed.

3.1.2 Providing operators with the required respiratory protection.

3.1.3 Supervisors shall be responsible for ensuring that only trained personnel operate the filtration equipment.

3.2 Operators shall be responsible for performing tasks in accordance with this SOP.

4.0 DEFINITIONS

None

5.0 REFERENCES

5.1 SOP 8-C-104, "Makeup of Precoat Slurry and Precoating Rotary Vacuum Filters"

5.2 MS 8-BN/E-490-2, "Disposal of Waste Filtrate and Effluents"

6.0 INDUSTRIAL HEALTH AND SAFETY REQUIREMENTS

6.1 A defined safety system is not involved.

6.2 Leather-palm gloves shall be worn when operating equipment or while handling lime bags, sharp edged or abrasive material, and metal drums.

6.3 Chemical resistant gloves shall be worn while taking samples and performing pH and dimple tests.

R - MATERIAL REVISED, ADDED, OR DELETED.

6.0 INDUSTRIAL HEALTH AND SAFETY REQUIREMENTS (cont.)

R 6.4 Safety glasses shall be worn unless additional eye protection is specified by
R the supervisor, IRS&T, or posted signs.

6.5 Chemical cover goggles shall be worn when handling bags of lime.

6.6 Respiratory protection provided by the supervisor shall be worn when required.

6.7 A "weep" hole for pressure equalization shall be kept open in filter drum head.

6.8 Floor area at tanks and the filter equipment shall be clean and dry. Spills shall be cleaned as soon as the spill occurs.

6.9 Empty pallets and bags shall be moved to designated storage after filling tank.

6.10 A guarded, self closing knife shall be used to open material bags. The bag shall be cut in a direction away from the body.

6.11 When working near the knife mechanism, the filter drum shall be stopped and away from the knife.

6.12 Any circumstance which could have resulted in an intake of radioactive materials by inhalation, ingestion or absorption shall immediately be reported to a supervisor. The supervisor shall immediately report the circumstance of possible radioactive materials intake to Radiological Safety for evaluation. The involved employees shall report to Medical Services at the end of their shift or as directed to submit a urine sample and again report at the start of their next shift to submit another urine sample.

7.0 PROCEDURE (See Figure 1)

7.1 Preparation

7.1.1 Prepare tare weighed, premarked, color-coded drum(s) (Refer to MS 8-BN/E-490-2) to receive filter cake.

7.1.2 Place a drum on the conveyor and move the drum under the discharge chute.

7.1.3 Start the agitator in the Digester Tank to be filtered.

NOTE: Digester Tank numbers are D101, D102, D103, D104, and D105.

R - MATERIAL REVISED, ADDED, OR DELETED.

7.0 PROCEDURE (cont.)

7.1.4 Take an 8-ounce sample from the Digester Tank to be filtered.

7.1.5 Using the portable plant test unit in the control room, check the sample to determine the pH of the liquid to be filtered. If the pH is ≥ 11.0, the liquid is ready to be filtered.

7.1.5.1 If the pH is less than 11.0, add lime.

7.1.5.2 Repeat Steps 7.1.4, and 7.1.5 until pH is at least 11.0.

7.1.6 Open the Discharge Valve from the selected Digester Tank to the East and/or West ODS Pump.

7.1.7 Make-up filter precoat slurry and precoat Oliver Filter D43-204 (Refer to SOP 8-C-104).

7.1.8 Check the capacity of Filtrate Hold Tanks 21A, 22A, and 28A.

CAUTION: **ENSURE THAT CAPACITY IS AVAILABLE FOR FILTRATE.**

NOTE: Use Filtrate Pumps G43-224 and G43-225.

7.2 Filtering Uranium Bearing Slop

7.2.1 Open East and/or West ODS Pumps Inlet and Outlet Valves and Oliver Filter Inlet Valve.

NOTE: Both pumps can be used if a faster rate of filtration is desired.

7.2.2 Start the timer.

7.2.3 Set timer to keep the level in the Filter Basin approximately six inches below the overflow.

7.2.4 Check that liquid is going into the Filter Basin.

7.2.4.1 If no liquid is observed, use compressed air to blow out the lines between the ODS Pump and the Oliver Filter and between the Digester Tank and the ODS Pump.

7.2.5 Set the knife Advance Mechanism for a light precoat cut.

R - MATERIAL REVISED, ADDED, OR DELETED.

7.0 PROCEDURE (cont.)

7.2.6 Start the Knife Drive and lock the Feeder Regulator Hand Crank.

7.2.7 Take a 4-ounce sample of the filtrate and dimple check the sample per Item 7.6.

7.2.8 Check the Filtrate Hold Tank. When the tank is full, shut off Pump G43-224 and/or G43-225 and take two 4-ounce dip samples from the tank.

CAUTION: **DO NOT AGITATE TANK BEFORE SAMPLING.**

NOTE: Do not add filtrate to the Hold Tank after a sample has been taken.

7.2.9 Record date, time, sample number and tank number on a "Sample Log," Form FMPC-PRO-1632 (See Figure 2).

7.2.10 Complete a "Report of Chemical Analysis," Form FMPC-T-200 (See Figure 3). Record material type, account number, date, submitted by, and sample number. Request analysis for U lb/gal, Cu ppm, and pH.

7.2.11 Send the samples and the form to the Laboratory.

7.2.12 When the lab results of the filtrate are received, if filtrate is within specification (Refer to MS 8-BN/E-490-2), call the General Sump and request permission to pump filtrate.

7.2.12.1 If out-of-specification, resample tank and repeat Steps 7.2.9 thru 7.2.11. If the second analysis confirms the out-of-specification condition, notify the supervisor and proceed as directed.

R 7.2.13 After receiving permission to pump, check the transfer line to the General
R Sump. If the line is inoperable, notify the supervisor. At the
R supervisors direction, proceed as follows:

R NOTE: The supervisor shall contact the Area Supervisor and Utility
R Engineer for permission to set up a temporary transfer line.

R 7.2.13.1 Connect the temporary transfer line (firehose or other acceptable line)
R specified by the supervisor to the Transfer Pump Mainfold.

R 7.2.13.2 Run the line to the General Sump. Ensure that the line is not an
R obstacle to traffic.

7.0 PROCEDURE (cont.)

R 7.2.13.3 If necesary, post signs or barricades where the line crosses walkways.

R 7.2.14 If the transfer line is operable or the temporary line is set up, start
R Transfer Pump 735-43-216 or 735-43-226 and pump filtrate to the General
R Sump.

R CAUTION: DO NOT PUMP NEW FILTRATE INTO THE HOLD TANKS UNTIL FINISHED
R PUMPING IN-SPECIFICATION FILTRATE.

R 7.2.15 Check the permanent or temporary transfer line for leaks.

R 7.2.15.1 If a leak is discovered, shut off the Transfer Pump, notify the
R supervisor, and proceed as instructed.

R 7.2.16 When pumping is completed, proceed as follows:

R 7.2.16.1 Shut off the Transfer Pump.

R 7.2.16.2 Close the pump Discharge Valve.

R 7.2.17 Notify the General Sump that the Filtrate Line is being blown out.

R 7.2.18 Open the Filtrate Line Air Valve.

R 7.2.19 When notified by the General Sump that air is being received, proceed as follows:

R 7.2.19.1 Close the Air Valve.

R 7.2.19.2 Open the Transfer Pump Discharge Valve.

7.2.20 Check the product drum. When full, move the drum out from under the discharge chute.

7.2.21 Place an empty drum (Refer to Step 7.1.1) under the chute.

7.2.22 Install a lid and lock ring on the product drum.

7.2.23 Using a clean rag, remove all material on the outside of the drum.

7.2.24 Place the rags into a drum that is color-coded for contaminated trash (Refer to MS 8-BN/E-490-2).

R - MATERIAL REVISED, ADDED, OR DELETED.

7.0 PROCEDURE (cont.)

7.2.25 Using a handstacker, move the full product drum onto a clean skid.

7.2.26 After completion, move the loaded skids to a storage area designated by the supervisor.

7.3 Placing Filter on Standby

NOTE: Before the filter can be placed on standby, slop shall be filtered for a minimum of 15 minutes.

7.3.1 Shut off the East and/or West ODS Pump and close the valves from the Digester Tank.

7.3.2 Shut off the Knife Drive and retract the knife blade.

7.3.3 Shut off Filtrate Pump G43-224 or G43-225.

7.3.4 Shut off the Filter Exhaust Hood Blower Motor.

7.3.5 Shut off the Drum Rotator.

NOTE: The filter will now be on "STANDBY". The pickup and drying vacuum shall be "ON" to keep the precoat from falling off the drum. The agitator shall be "ON" to keep solids from settling in the Filter Basin and causing the agitator to become restricted.

7.4 Shutting Down the Filter Operation

7.4.1 Place the filter on standby (Refer to Steps 7.3.1 through 7.3.5).

7.4.2 Shut off Nash Vacuum Pump No. G43-218.

7.4.3 Open the Drain Valves between the bottom of the Filter Basin and Digester Tank No. D101.

7.4.4 Wash residual precoat and solids from the Oliver Filter and Filter Basin into Digester Tank No. D101.

NOTE: The flow from Filter Basin to Digester Tank No. D101 is by gravity.

7.4.5 Shut off the Filter Basin Agitator Drive.

7.4.6 Close valves between the Filter Basin and Digester Tank No. D101.

R - MATERIAL REVISED, ADDED, OR DELETED.

7.0 PROCEDURE (cont.)

7.5 Emergency Shutdown

7.5.1 Shut off East and/or West ODS Pumps.

7.5.2 Turn off the Knife Drive.

7.6 Filtrate Dimple Test

7.6.1 Obtain a clean dimple plate, eye dropper, potassium ferrocyanide, and acetic acid.

7.6.2 Clean the dimple tray and eye dropper.

7.6.3 Fill eye dropper with filtrate from the 4-ounce sample. Place 10 drops of filtrate into a clean dimple.

7.6.4 Add three drops of potassium ferrocyanide to the dimple of filtrate.

7.6.5 Add three drops of acetic acid to the dimple.

7.6.6 If the filtrate turns light yellow or light green, continue the filtration process (Refer to Step 7.2.8).

NOTE: Light yellow or light green indicates that the sample has no detectable uranium.

7.6.6.1 If the filtrate turns brown or dark green, check the pH of the liquid being filtered and the filter precoat. Notify the supervisor and proceed as directed.

NOTE: Brown or dark green indicates that the sample contains uranium.

8.0 APPLICABLE FORMS

8.1 Form FMPC-PRO-1632, "Sample Log"

8.2 Form FMPC-T-200, "Report of Chemical Analysis"

R - MATERIAL REVISED, ADDED, OR DELETED.

OPERATIONS PROCEDURE	FILTRATION OF URANIUM BEARING SLOPS	SOP 8-C-115 AREA: Plant 8
Authorization: Signature on File R. L. Gardner, Manufacturing	Supersedes: 8-C-115 04-10-86	Issue Date: 08-08-90

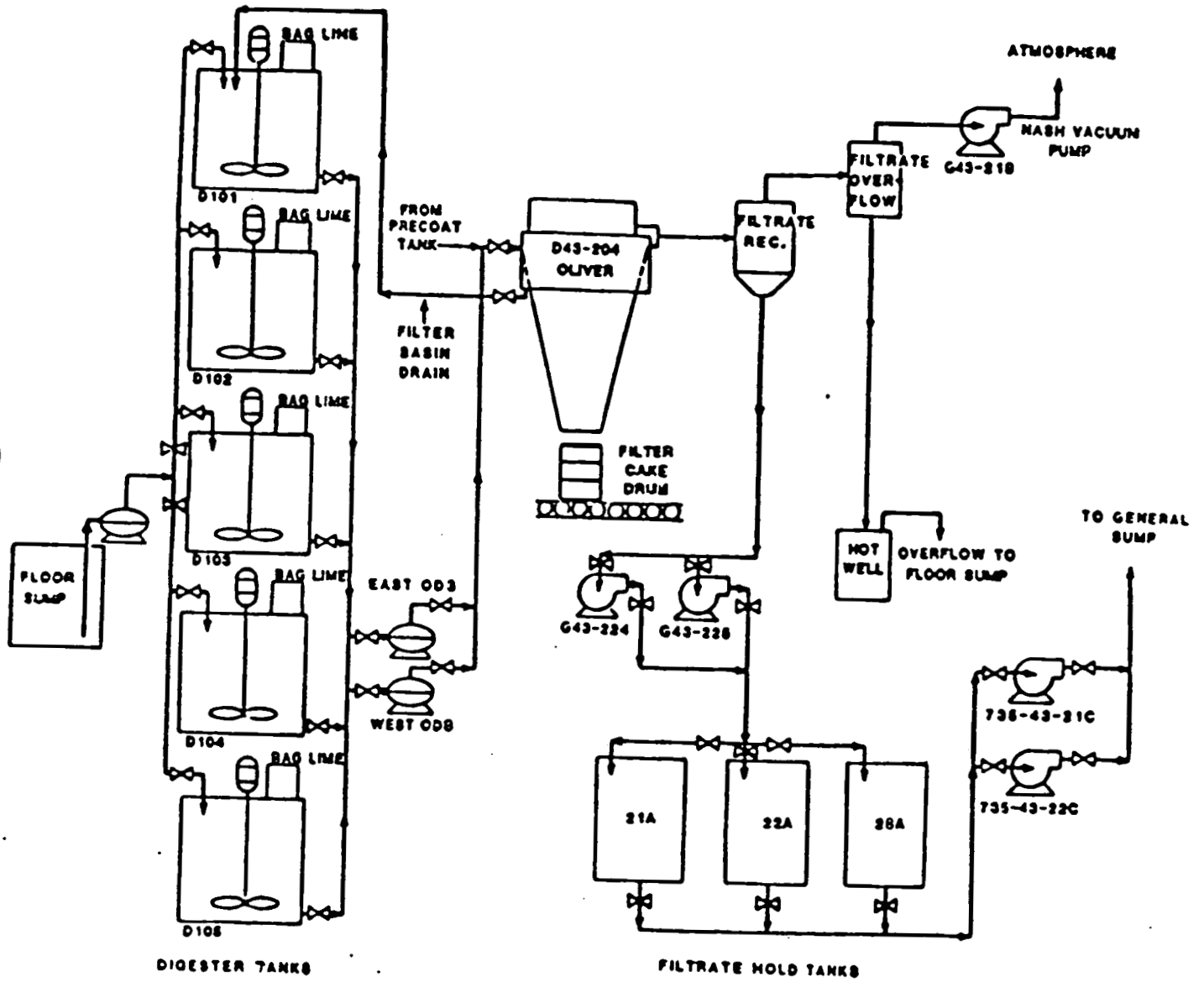

SUMP FILTER FLOW DIAGRAM
Figure 1

R - MATERIAL REVISED, ADDED, OR DELETED.

FMPC

RECOVERY PLANT - PLANT 8

SAMPLE LOG

(For Samples Submitted to Analytical Dept.)

SAMPLE NUMBER	TIME SAMPLE TAKEN	DATE	TANK, DIGESTER OR MATERIAL	ANALYSES			TIME ANALYSES RECEIVED

NO.	DISTRIBUTION OF COPIES
1	Area Foreman - Plt. 8. *(RECORD COPY)*

-PRO-1632 (2/10/80)

SAMPLE LOG
FORM FMPC-PRO-1632
Figure 2

R - MATERIAL REVISED, ADDED, OR DELETED.

FMPC

REPORT OF CHEMICAL ANALYSES

(NOTE: Write Firmly — Part 4 must be legible.)

Lab. Nos. _____

FMPC-T-200 (REV 5 & 86)

Lot No. _____

Analyses Requested _____

MATERIAL	LAB. NO.	IDENTIFICATION	ANALYTICAL DATA					
ACCOUNT NO								
DATE SAMPLED								
SUBMITTED BY								
REMARKS								

NO	DISTRIBUTION OF COPIES
1	Originator
2	Extra Copy
3	Quality Assurance
4	Analytical (RECORD COPY)

Approved By _____ Date of Report _____

REPORT OF CHEMICAL ANALYSIS
FORM FMPC-T-200
Figure 3

R - MATERIAL REVISED, ADDED, OR DELETED.

OPERATIONS PROCEDURE	FILTRATION OF URANIUM BEARING SLOPS	SOP 8-C-115 AREA: Plant 8
Authorization: Signature on File R. L. Gardner, Manufacturing	Supersedes: 8-C-115 04-10-86	Issue Date: 08-08-90

RECORD OF ISSUE/REVISIONS

DATE	REV.NO.	DESCRIPTION AND AUTHORITY
04-10-86	N/A	Request for new SOP for Filtration of Uranium Bearing Slops per SOP Change Request No. 1231, initiated by T. N. Huey. Cancelled SOP 8-C-112 used as reference.
07-05-89	N/A	Reissued to add IH&S statement, change step sequence, and verbage per Request No. P86-185, initiated by T. N. Huey. Reformatted to conform with current procedure program.
08-08-90	1	Revised to add filtrate line blowout requirements per Request P90-021 initiated by B. L. Krupa and incorporate CIO C89-126 (P90-147).

R - MATERIAL REVISED, ADDED, OR DELETED.

WESTINGHOUSE ENVIRONMENTAL MANAGEMENT COMPANY OF OHIO SITE DOCUMENT PROGRAM		SITE STANDARD OPERATING PROCEDURE 2344 Page 1 of 12
Title: PREPARING AND TRANSFERRING UNCHARACTERIZED WASTE TO THE CONTROLLED HOLDING AREA		DOCUMENT NO: SSOP-0008 REVISION NO. 0
Authorization: W. H. Britton, President	Supersedes: None	Issue Date: 08-20-91

1.0 PURPOSE

This document provides the procedure for the preparation and transport of uncharacterized waste to the Controlled Holding Area (CHA) located at the center of Building 64.

2.0 APPLICABILITY

This procedure applies to uncharacterized waste (excluding exceptions stated in 5.0 of this procedure) from any source on site which requires holding in the CHA during the waste characterization period.

3.0 RESPONSIBILITIES

3.1 The Material Generator Supervisor shall be responsible for the following:

3.1.1 Contacting Industrial Hygiene or Radiological Safety to determine the appropriate respiratory protection for the process being performed.

3.1.2 Providing operators with the required respiratory protection and other protective safety equipment.

3.1.3 Ensuring the transport of uncharacterized waste to the CHA within three days from the date the container is declared full.

3.1.4 Obtaining required work permits.

3.2 The Material Generator shall be responsible for complying with this procedure.

3.3 Materials Control and Accountability (MC&A) shall be responsible for preparing and maintaining required documentation per this procedure.

3.4 Facilities Services shall be responsible for the following:

3.4.1 Signing for the waste shipment prior to transfer to the CHA.

3.4.2 Transporting containers to the CHA as requested.

3.5 Quality Assurance shall be responsible for performing periodic surveillance activity to verify requirements of this procedure are being met.

4.0 DEFINITIONS

4.1 Controlled Holding Area (CHA) - The area designated for storing uncharacterized waste and staging characterized waste.

4.2 Spill - Any unplanned event involving spilling, leaking, pumping, pouring, injection, escaping, emitting, emptying, leaching, releasing, dumping, discharging, or disposing of hazardous material on to the ground, into water, or into the air, within or beyond the boundaries of the FMPC.

4.3 Uncharacterized Waste - For this procedure, this term refers to emergency waste (i.e. spills), newly generated waste streams which require sampling, and newly identified backlog waste that requires evaluation.

4.4 Soil Boring Material - Residual material accumulated from soil drilling.

4.5 Assistant Emergency Duty Officer (AEDO) - The AEDO is the onsite management authority for all unplanned and unwanted events. This position is filled by a Utilities Engineer.

4.6 Newly Identified Backlog Waste - A waste stream identified after June 30, 1990 (e.g. previously not inventoried).

4.7 Newly Generated Waste - A waste stream which is generated after June 30, 1990.

5.0 GENERAL

5.1 This procedure shall not be used for waste generated by a soil boring activity.

5.2 This procedure excludes backlog waste and waste stored in tanks, silos, bins, or process equipment.

5.3 A "Material Evaluation", Form FMPC-OPR-3252 shall be initiated per SSOP-0002 prior to the generation of any waste streams, excluding waste streams generated by an emergency.

6.0 INDUSTRIAL HEALTH AND SAFETY REQUIREMENTS

6.1 A defined safety system is not involved.

6.2 Personnel safety equipment (eyewash, fire extinguisher, safety showers) shall be available for emergencies.

6.0 INDUSTRIAL HEALTH AND SAFETY REQUIREMENTS (cont.)

6.3 Industrial Hygiene shall evaluate the work environment at the start of each lot sampling or the transfer of hazardous material from drums to tank storage.

6.4 Safety glasses shall be worn unless other eye protection is specified by IRS&T. Goggles or face shields shall be worn when handling caustic, acids, or any other chemical which could cause immediate skin damage upon contact.

6.5 Respiratory protection provided by the supervisor shall be worn when required.

6.6 Leather-palm gloves shall be worn while handling drums, operating equipment, and when handling rough, sharp-edged, or contaminated materials.

6.7 Neoprene rubber gloves shall be worn when skin contact with hazardous chemical waste is possible.

6.8 A rubber apron shall be worn when handling caustic, acids, or a chemical that could cause skin damage.

6.9 In case of contact with acid or caustic, contaminated clothing shall be removed immediately and the affected body area flushed with water for a minimum of 15 minutes in eye bubbler/safety shower. Injured personnel shall report to Medical Services immediately.

6.10 A spill of hazardous material shall be reported to the supervisor immediately, or in the supervisor's absence, the AEDO.

6.11 Any circumstance which could have resulted in an intake of radioactive material by inhalation, ingestion or absorption shall immediately be reported to a supervisor. The supervisor shall immediately report the circumstances of possible radioactive materials intake to IRS&T Radiological Safety Section for evaluation. The involved personnel shall report to the Urine Sampling Station at the end of their shift to complete a Incident Investigation Report (IIR) (Form FMPC-ES&H-1458), and submit an incident urine sample. The involved employees shall also report to the Urine Sampling Station at the start of their next shift to submit a followup urine sample. Employees are responsible for complying with additional requirements as specified by the Radiological Safety Section.

7.0 PROCEDURE

7.1 Preparation of Uncharacterized Waste for Transfer to CHA

MATERIAL GENERATOR

7.1.1 Upon receipt of a container, contact Operable Unit 3 (OU3) Compliance to verify a Material Evaluation Form (MEF) has been initiated.

7.1.1.1 If a MEF has been initiated, obtain confirmation from OU3 Compliance for the disposition of the waste.

7.1.1.2 If a MEF has not been initiated, proceed to 7.1.2.

7.1.2 Obtain a numbered "Material Evaluation", Form FMPC-OPR-3252 from Waste Management Records and initiate the "Material Evaluation" per SSOP-0002.

7.1.3 For material in a container, complete the following:

7.1.3.1 Ensure the container lid is secure.

7.1.3.2 Obtain a clear, weather-resistant, self-adhesive envelope from FMPC stores and affix to the lid of the container.

7.1.3.3 Record the Material Evaluation Form (MEF) number in the upper right corner on an "Item Production/Certification/ Identification" (65 Card), Form FMPC-CONT-1945-XX and a "Nuclear Material Transfer Record" (68/69 Card), Form FMPC-AC-1990.

7.1.3.4 Insert the 65 Card and the 68/69 Card into the plastic envelope on the container lid.

7.1.3.5 Proceed to Step 7.1.7.

7.1.4 For an uncharacterized waste spill, complete the following:

7.1.4.1 Report and control the spill per FMPC-503.

7.0 PROCEDURE (cont.)

7.1.4.2 Obtain an empty container as specified by the supervisor and move container near the applicable scale for weighing.

NOTE: If a scale is not available in the area, the container shall be weighed at the CHA by CHA personnel.

7.1.4.3 If not previously completed, inspect the scale to be used per the SOP applicable to the area.

7.1.4.4 Tare weigh the container per the SOP applicable to the area and remove from scale.

7.1.4.5 Stencil the tare weight on the side of the container as shown in Figure 1.

7.1.4.6 Obtain a clear, weather-resistant, self-adhesive envelope from FMPC stores and affix to the lid of the container.

7.1.4.7 Record the MEF number on a 65 Card and a 68/69 Card in the upper right corner.

7.1.4.8 Insert the 65 Card and the 68/69 Card into the plastic envelope on the container lid.

7.1.4.9 Remove container lid and fill container with waste material approximately three inches from the top of the container.

7.1.4.10 Install the lid and bolt-type lock ring on an open head container, or install the threaded bung plug on a bung head container and secure as follows:

7.1.4.10.1 Check gasket placement and condition of the lid (for open head drums). Replace damaged gaskets/lids.

7.1.4.10.2 Seat lid evenly on open head container or screw bung plug into bung hole tightly and evenly using a bung wrench.

7.1.4.10.3 Place locking bolt ring on lid of open head container ensuring the flanges point downward from lock ring (See Figure 2).

NOTE: Locking bolt shall be positioned no more than six inches from the seam of the container.

7.0 PROCEDURE (cont.)

7.1.4.10.4 Install locking bolt shaft through unthreaded flange, locking nut, and then threaded flange (See Figure 2) so that the bolt head rests against unthreaded flange.

7.1.4.10.5 Manually tighten the locking nut against the threaded flange. Then using a wrench, tighten the nut against the flange an additional 1/4 turn.

7.1.5 Inspect the forklift to be used per the "Gas, LPG, Diesel Fuel Equipment Operators Check," Form FMPC-OPR-2414.

7.1.6 Using a forklift, move the filled container on to the scale for weighing.

MATERIAL GENERATOR SUPERVISOR

7.1.7 Specify the scale to be used and ensure the container is weighed prior to transferring the container to the CHA.

MATERIAL GENERATOR

7.1.8 Weigh the container to obtain the gross weight.

7.1.9 If the container is within the specified weight limit, proceed to Step 7.1.11.

NOTE: Maximum weight per 55 gallon drum is 1,200 pounds gross.

7.1.10 If the container is over the specified weight limit of 1,200 pounds gross, remove container from scale, transfer the excess waste to a new container and reweigh as follows:

7.1.10.1 Obtain a new container specified by the supervisor, obtain tare weight, and identify in accordance with this procedure.

7.1.10.2 Remove the lock ring and lid or bung head from container holding the waste.

7.1.10.3 Using scoop or approved removal device, remove waste from the container and place in the new container until the container is within limits or place material in an unweighed, underfilled drum of the same lot.

7.0 PROCEDURE (cont.)

7.1.10.4 Seal both containers by installing a lid and bolt-type lock ring on an open head container, or install a threaded bung plug on a bung head container and secure by completing Substeps 7.1.4.10.1 through 7.1.4.10.5.

7.1.10.5 Using the forklift, move each container on to the scale and weigh separately ensuring each container is within the specified weight limit.

7.1.11 Remove the 65 Card from the envelope on the container lid.

7.1.12 Record the gross weight, net weight, lot sequence number, and badge number on the 65 Card.

7.1.13 Sign the area provided for the generator's signature on the 65 Card.

7.1.14 Using the forklift, move the container from the scale.

7.1.15 Stencil the gross weight, net weight, lot sequence number, and container number on the container as shown in Figure 1.

7.1.16 Notify supervisor the container is prepared for the CHA.

MATERIAL GENERATOR SUPERVISOR

7.1.17 Record the date and time the container is declared full and sign the area provided for the supervisor's signature on the 65 Card.

7.1.18 Notify MC&A the 68/69 Card requires completion.

MC&A REPRESENTATIVE

7.1.19 Complete the 68/69 Card and return to the material generator.

MATERIAL GENERATOR

7.1.20 Upon receipt of the 68/69 Card from MC&A, notify the supervisor.

7.0 PROCEDURE (cont.)

MATERIAL GENERATOR SUPERVISOR

7.1.21 Sign the area indicated for the shipper signature on the 68/69 Card.

MATERIAL GENERATOR

7.1.22 Upon receipt of the signed 65 Card and 68/69 Card, insert the cards into the envelope on the container lid.

7.1.23 Stencil the date that the container was declared full on the container in the area titled "Accumulation Start Date" as shown in Figure 4.

7.1.24 Notify the supervisor that the container is ready for transport to the CHA.

MATERIAL GENERATOR SUPERVISOR

7.1.25 Notify Facilities Services and CHA Supervisor the container is ready for transport to the CHA.

FACILITIES SERVICES

7.1.26 Obtain from IRS&T any protective equipment requirements for transporting container and ensure the MEF has been approved by IRS&T.

7.1.27 Transport the container per applicable department procedure to the CHA.

8.0 APPLICABLE DOCUMENTS

8.1 Drivers

8.1.1 DOE 5400.3, "Hazardous and Radioactive Mixed Waste Management"

8.2 Reference Documents

8.2.1 SSOP-0002, "Completing the Material Evaluation Form"

8.2.2 FMPC-503, "FMPC Spill Incident Reporting and Cleanup"

9.0 APPLICABLE FORMS

9.1 FMPC-OPR-3252, "Material Evaluation"

9.2 FMPC-CONT-1945-XX, "Item Production/Certification/Identification"

9.3 FMPC-AC-1990, "Nuclear Material Transfer Record"

9.4 FMPC-OPR-2414, "Gas, LPG, Diesel Fuel Equipment Operators Check"

10.0 FIGURES

10.1 Figure 1, Diagram of Container Identification

10.2 Figure 2, Diagram of Lock Ring

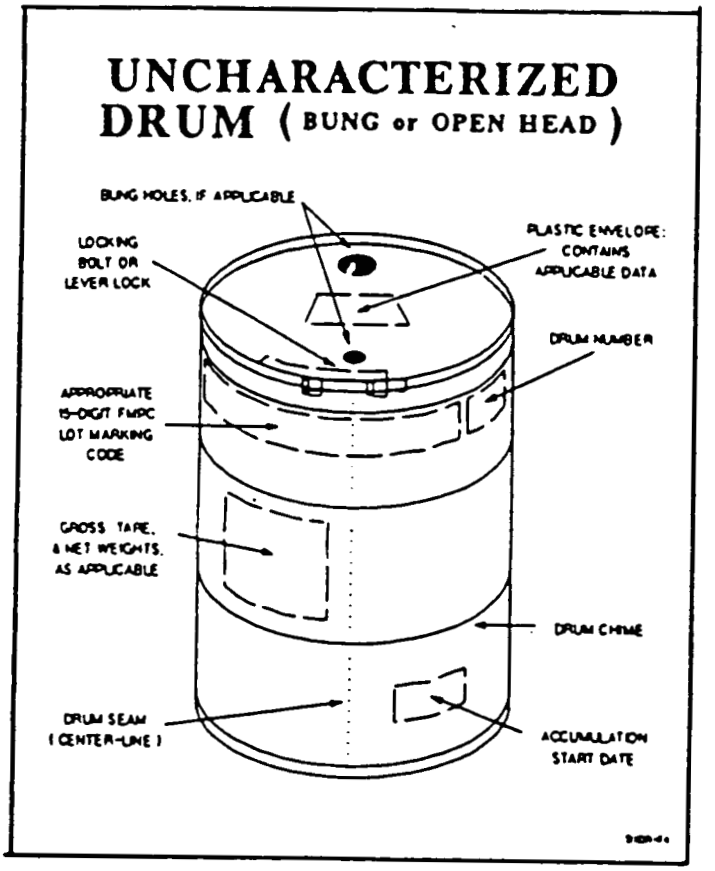

DIAGRAM OF CONTAINER IDENTIFICATION
Figure 1

WESTINGHOUSE ENVIRONMENTAL MANAGEMENT COMPANY OF OHIO SITE DOCUMENT PROGRAM		SITE STANDARD OPERATING PROCEDURE Page 11 of 12
Title: PREPARING AND TRANSFERRING UNCHARACTERIZED WASTE TO THE CONTROLLED HOLDING AREA		DOCUMENT NO: SSOP-0008 REVISION NO. 0
Authorization: W. H. Britton, President	Supersedes: None	Issue Date: 08-20-91

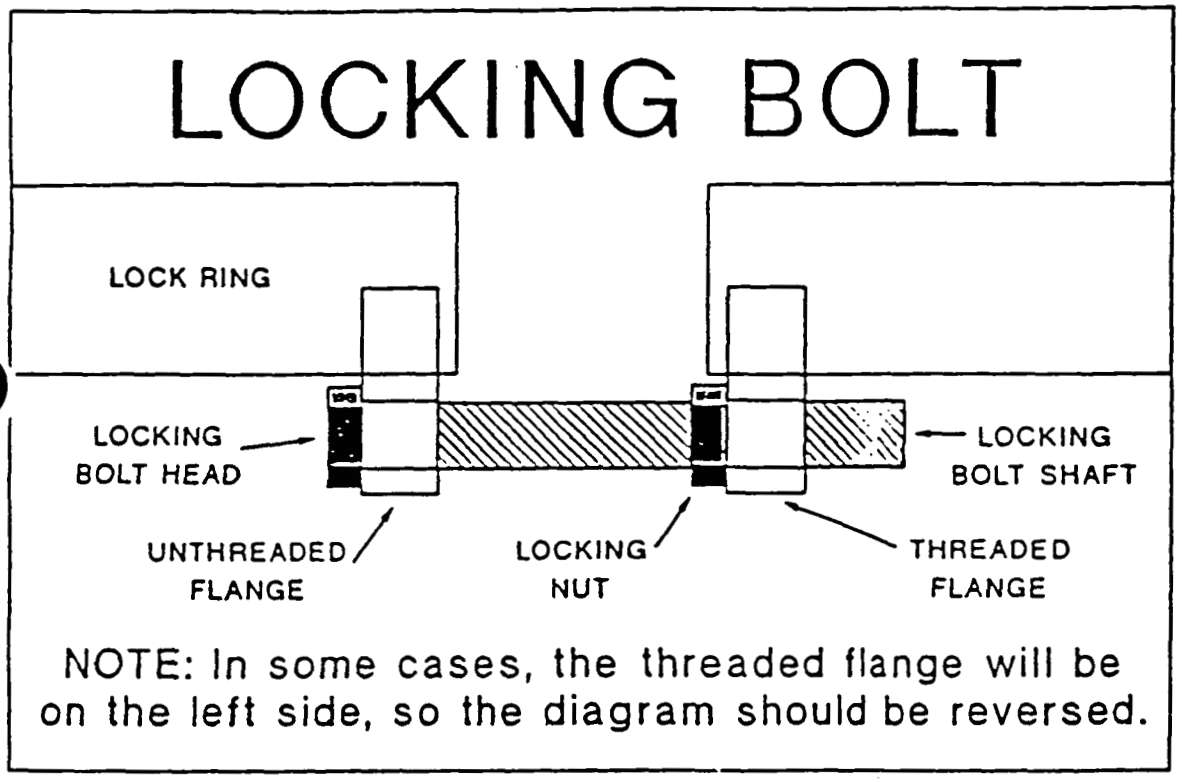

DIAGRAM OF LOCK RING
Figure 2

WESTINGHOUSE ENVIRONMENTAL MANAGEMENT COMPANY OF OHIO SITE DOCUMENT PROGRAM		SITE STANDARD OPERATING PROCEDURE Page 12 of 12
Title: PREPARING AND TRANSFERRING UNCHARACTERIZED WASTE TO THE CONTROLLED HOLDING AREA		DOCUMENT NO: SSOP-0008 REVISION NO. 0
Authorization: W. H. Britton, President	Supersedes: None	Issue Date: 08-20-91

RECORD OF ISSUE/REVISIONS

DATE	REV. NO	DESCRIPTION AND AUTHORITY
08-20-91	0	New procedure required for preparing and transferring uncharacterized waste to a holding area per Request No. P91-061, initiated by J. Ogg.

FMPC WESTINGHOUSE MATERIALS COMPANY OF OHIO OPERATIONS DOCUMENT PROGRAM	Page 1 of 3 Revision No. 0	2344
OPERATIONS PROCEDURE	SHIFT ORDERS	PO-D-023 DEPARTMENT PROCEDURE
Authorization: S.J. Dechter, Operations	Supersedes: None	Issue Date: 08-24-90

1.0 PURPOSE

The shift orders are essential in providing a means for management to communicate short-term information and administrative instructions to operating personnel. This procedure establishes the instructions to followed by the Area Supervisor of each facility to insure that the Shift Supervisors are knowledgeable of special activities in the facility.

2.0 APPLICABILITY

Shift Orders are required when information such as special operations, administrative directions, special data collection requirements and other short-term matters need to be communicated to the shift supervisor and the operation crew.

3.0 RESPONSIBILITIES

3.1 The Area Supervisor shall be responsible for preparing Shift Orders and ensuring the orders are posted by the Shift Supervisor.

4.0 DEFINITIONS

None

5.0 REFERENCES

None

6.0 PROCEDURE

6.1 The format of the Shift Order can be in the form of a posting in the Shift Supervisors Office.

6.2 The Shift Order shall be written in a clear, concise and complete manner so the order is easily understood, contain the date the order is written, and the Area Supervisor signature.

6.3 Shift Orders shall be segregated into daily and long-term orders in order to facilitate review by shift personnel.

6.4 The Shift Order shall be signed by the Shift Supervisor after the order is reviewed with the shift operation personnel.

6.0 PROCEDURE (cont.)

6.6 Posted Shift Orders that are no longer applicable or outdated (over 1 month) shall be promptly removed and updated or recorded in the Area Supervisor Log as no longer applicable.

7.0 APPLICABLE FORMS

None

OPERATIONS PROCEDURE	SHIFT ORDERS	PO-D-023 DEPARTMENT PROCEDURE
Authorization: S.J. Dechter, Operations	Supersedes: None	Issue Date: 08-24-90

RECORD OF ISSUE/REVISIONS

DATE	REV NO	DESCRIPTION AND AUTHORITY
08-24-90	0	Procedure required for Shift Orders per Request No. P90-239, initiated by N.K. Weichold.

1.0 PURPOSE

The purpose of this document is to establish the procedure for taking Nuclear Material inventory in Plant 1.

2.0 APPLICABILITY

This document is applicable to nuclear materials in Plant 1.

3.0 RESPONSIBILITIES

3.1 Supervisors shall be responsible for the following:

3.1.1 Ensuring that Plant 1 is prepared for inventory.

3.1.2 Coordinating with the Plant NM Reporting Specialist to conduct the inventory.

3.1.3 Checking the "Notice of Inventory Letter" for instructions.

3.1.4 Directing the shut down of Plant 1 operations.

3.1.5 Halting material transfers between MBAs, if necessary.

3.1.6 Acting as an inventory completion team member to determine that the inventory is complete.

3.1.7 Directing that operations be resumed after notification by MC&A that inventory is concluded.

3.1.8 Informing operators of the Standard Operating Procedures that apply to the process or tasks being performed.

3.1.9 Contacting Industrial Hygiene or Radiological Safety to determine the appropriate respiratory protection for the area being inventoried.

3.1.10 Providing operators with the required respiratory protection.

3.2 Operators shall be responsible for the following:

3.2.1 Preparing the plant for inventory as directed by the supervisor.

3.2.2 Taking an inventory of depleted, normal, and enriched nuclear material in accordance with this SOP.

RESPONSIBILITIES (cont.)

3.3 The Plant NM Reporting Specialist shall be responsible for the following:

3.3.1 Coordinating with the supervisor to conduct the inventory.

3.3.2 Issuing documentation to inventory teams.

3.3.3 Receiving and verifying completed documents returned by inventory teams.

3.3.4 Assisting in the determination that inventory is complete.

3.3.5 Entering the inventory sheets into the Residue Inventory System.

3.3.6 Generating the inventory for the MC&A Accountants reports.

3.3.7 Ensuring that all used and/or unused inventory sheets and unused Inventory Labels have been returned.

3.4 MC&A shall be responsible for issuing a "Notice of Inventory Letter", training personnel to take inventory, assisting to determine that all nuclear materials have been inventoried, and notifying the Plant 1 Supervisor when the inventory has been obtained and reconciled.

4.0 DEFINITIONS

4.1 Inventory Team - Employees assigned by the Plant 1 Supervisor and MC&A to take the inventory. The Plant 1 employees make the count and the MC&A employees oversee the inventory and record the data.

4.2 MBA - Material Balance Account

5.0 REFERENCES

5.1 SOP 1-C-701, "Plant 1 Dust Collectors"

5.2 SOP 20-C-904, "General Nuclear Safety Requirements"

6.0 INDUSTRIAL HEALTH AND SAFETY REQUIREMENTS

6.1 A defined safety system is not involved.

6.2 Leather or leather-palm gloves shall be worn while handling containers, nuclear material, and sharp-edged or abrasive material.

R - MATERIAL REVISED, ADDED, OR DELETED.

6.0 INDUSTRIAL HEALTH AND SAFETY REQUIREMENTS (cont.)

6.3 Respiratory protection provided by the supervisor shall be worn.

6.4 Safety glasses shall be worn unless additional eye protection is required.

6.5 Cover goggles shall be worn when there is a possibility of exposure to dust, organic solvent, acid, or caustic.

6.6 Skids of material shall be stacked no more than 3 high or as specified in the nuclear safety requirements of the applicable manufacturing specification.

6.7 A maximum of four 55 gallon drums, five 30 gallon drums, or three 85-gallon drums shall be loaded on a skid.

6.8 Skid loads shall not exceed 6,000 lbs.

6.9 Full or partially full drums shall be lifted and/or moved by mechanical material handling equipment, not by hand.

6.10 Nuclear safety limits and restrictions of SOP 20-C-904 and/or the applicable manufacturing specifications for the procedure or process shall be followed at all times.

6.11 Anti-contamination clothing specified by OS&H shall be worn when required.

6.12 Chemical resistant gloves shall be worn when sampling or handling potentially hazardous chemicals.

6.13 Drums of residue shall be marked with NFPA/Hazard Communications labels.

6.14 Any circumstance which could have resulted in an intake of radioactive materials by inhalation, ingestion or absorption shall immediately be reported to a supervisor. The supervisor shall immediately report the circumstance of possible radioactive materials intake to Radiological Safety for evaluation. The involved employees shall report to Medical Services at the end of their shift or as directed to submit a urine sample and again report at the start of their next shift to submit another urine sample.

R - MATERIAL REVISED, ADDED, OR DELETED.

7.0 PROCEDURE

NOTE: Physical inventories require that operations cease during inventory preparation; transfers of materials between MBAs may be halted and processing equipment be emptied and cleaned out. All residues generated during cleanout shall be drummed, identified with the appropriate NFPA/Hazard Communication Labels, weighed, and sampled if necessary.

NOTE: All depleted (MBA 390), enriched (MBA 690), and normal (MBA 090) uranium in Plant 1 storage shall be inventoried at six month intervals or as directed by DOE. Thorium (MBA 590) material shall be inventoried as directed by DOE. Work-in-process uranium shall be inventoried monthly.

NOTE: The supervisor shall specify the SOP that is applicable to the process or task being performed.

NOTE: Drums shall be overpacked and/or restenciled during inventory (if needed), or the requirement for overpacking or restenciling shall be noted on the inventory sheet and done at a later date.

7.1 Preparation for Inventory

7.1.1 At the supervisors direction, perform the following:

7.1.1.1 Remove Inventory Labels from drums, skids, or pallets or place a current Inventory Label over the old label.

7.1.1.2 Check the Titan Mill. If the mill has been operated since the previous inventory, run the milling system to dead bed.

7.1.1.3 Empty the Titan Mill dumping station and surge hoppers.

7.1.1.4 Empty all process equipment.

7.1.1.5 Empty all dust collectors (Refer to SOP 1-C-701).

7.2 Taking Inventory

NOTE: The Plant Specialist shall issue documentation to the inventory teams.

NOTE: An "Inventory Label" (See Figure 1) printed with the month and year shall be applied to pallets, drums, and skids. If a label represents more than one item, a notation shall be made on the label of exactly what is represented (for example, "one skid - four drums"). For single items no notation is required.

R - MATERIAL REVISED, ADDED, OR DELETED.

7.0 PROCEDURE (cont.)

7.2.1 Taking the Storage Area Inventory

7.2.1.1 Inventory all uranium in storage on an "Inventory Record", Form FMPC-CONT-366 (See Figure 2).

NOTE: Record the lot number, number of containers, MBA, area, row, stack or skid.

7.2.1.2 Fill out the "Inventory Labels" on items inventoried.

7.2.1.3 Check the inventory counts with other team members.

7.2.1.4 Return all "Inventory Record" sheets to the NM Reporting Specialist.

7.2.2 Taking the Process Area Inventory

7.2.2.1 Check the Titan Mill, the mill dump stations, and the surge hoppers for uranium.

7.2.2.2 If there is any uranium in the system, including dead bed, estimate the amount.

7.2.2.3 Record the estimated amount, if any, on an "Inventory Record" sheet.

7.2.2.4 Inspect all remaining work-in-process vessels and/or systems for uranium holdup.

7.2.2.5 If holdup is present, take a sample of the material. Record the volume or weight, source, and amount of holdup on an "Inventory Record" sheet.

7.2.2.6 At Nuclear Materials Receiving, record the number of drums and/or containers awaiting disposition on an "Inventory Record" sheet.

7.3 Post-Inventory Procedure

NOTE: Manual records are compared to the computer data base and reconciled. If there are unreconcilable items, a physical count may be taken. After material is reconciled, the NM Reporting Specialist shall summarize the information on to an inventory sheet and enter the information into the EDP physical inventory system.

8.0 APPLICABLE FORMS

8.1 FMPC-CONT-366, "Inventory Record"

R - MATERIAL REVISED, ADDED, OR DELETED.

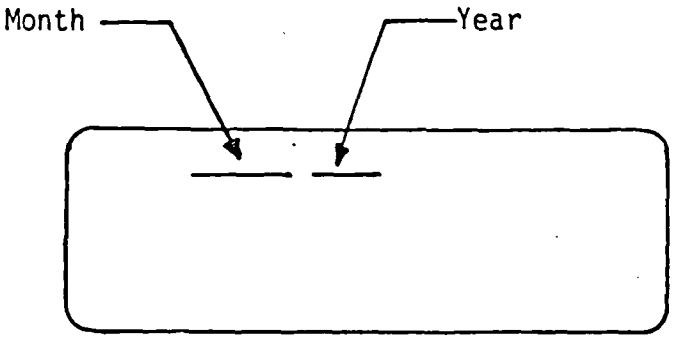

INVENTORY LABEL
Figure 1

R - MATERIAL REVISED, ADDED, OR DELETED.

FMPC
CONTROLLER'S ORGANIZATION MATERIALS CONTROL AND ACCOUNTABILITY
INVENTORY RECORD
☐ PHYSICAL ☐ WIP

DATE		INVENTORY SHEET NUMBER	
PLANT	AREA	NUCLEAR MATERIAL	

LINE NO	BADGE NUMBER / CHECKED BY	ITEM NO	LOT NUMBER: P O NUMBER	SOURCE	CLASS	MATERIAL	SEQUENCE	BIN	ID / STK LOC	QUANTITY	NET WEIGHT POUNDS
1											
2											
3											
4											
5											
6											
7											
8											
9											
10											
11											
12											
13											
14											
15											
16											
17											
18											
19											
20											
21											
22											
23											
24											

* INGOT NUMBER, DERBY NUMBER, DRUM NUMBER, ETC
* EG. DERBIES, INGOTS, BOXES, POTS, ETC

FMPC-CONT-366 (REV 7/1/88)

INVENTORY RECORD
FMPC-CONT-366
Figure 2

R - MATERIAL REVISED, ADDED, OR DELETED.

RECORD OF ISSUE/REVISIONS

PAGE	DATE	DESCRIPTION AND AUTHORIZATION
All	10-18-66	SOP issued.
All	06-15-73	SOP was reviewed and revised by G. Paterson of Nuclear Materials Control.
1 thru 8	07-18-89	Reissued to update to current practices per Request No. P89-055, initiated by B. L. Krupa and reformat to meet procedure program requirements.

LIST OF EFFECTIVE PAGES

PAGE	DATE
1 thru 8	07-18-89

R - MATERIAL REVISED, ADDED, OR DELETED.

1.0 PURPOSE

The purpose of this document is to provide the procedure for performing Refinery Nuclear Material Inventories.

2.0 APPLICATION

This procedure is applicable to the physical and work-in-process (WIP) inventory of normal and enriched materials in drums or tanks at the Refinery.

3.0 RESPONSIBILITIES

3.1 The Refinery Area Supervisor shall be responsible for directing that production activities cease and for halting movements of materials into and out of the Refinery.

3.2 Refinery Supervisors shall be responsible for the following:

3.2.1 Ensuring that only trained personnel perform the inventory.

3.2.2 Assigning hourly personnel to conduct the inventory.

3.2.3 Cooperating with MC&A Nuclear Materials Reporting Specialists to expedite the inventory.

3.2.4 Assisting as required to reconcile discrepancies in the inventories

3.2.5 Assisting in collecting sample data.

3.3 Operators shall be responsible for complying with this procedure.

3.4 The Nuclear Material Reporting Specialist (NMS) or MC&A Manager shall be responsible for ensuring that special inventory requirements are supplied and explained.

3.5 The MC&A Technologist shall be responsible for assisting the Production Supervisor in collecting all sample data to complete the inventory balance.

3.6 The Nuclear Material Reporting Specialist shall be responsible for assisting the Operations Supervisor in ensuring that all material has been accounted for in the inventory, assisting in reconciling discrepancies, and for assisting to conduct the inventory.

4.0 DEFINITIONS

4.1 Work-in-process (WIP) - Material in process lines, equipment, and tanks at any specific time.

4.2 Outage - A measure of the content level in a tank or vessel to determine material, liquid, gallonage.

4.3 UNH - Uranyl Nitrate Solution

4.4 Uranium trioxide (UO_3) - "orange oxide"

4.5 MBA - Material Balance Area

5.0 REFERENCES

5.1 SOP 2-C-701, "Refinery Dust Collectors"

5.2 SOP 2-C-601, "Refinery Sump"

5.3 SOP 2-C-909, "Operator Scale Checking in the Refinery"

5.4 SOP 20-C-904, "General Nuclear Safety Requirements"

6.0 INDUSTRIAL HEALTH AND SAFETY REQUIREMENTS

6.1 A defined safety system is not involved.

6.2 Leather-palm gloves shall be worn when handling containers, nuclear material, and sharp-edged or abrasive material.

6.3 Safety glasses shall be worn unless additional eye protection is required.

6.4 Chemical goggles and chemical-resistant gloves shall be worn when sampling or handling liquid chemicals or other potentially hazardous substances.

6.5 All nuclear safety limits and restrictions (Refer to SOP 20-C-904) shall be followed.

6.6 Respiratory Protection specified by Industrial Hygiene and Safety for chemical/organic contaminants and dust or Radiological Safety for radioactive contaminants shall be worn as required.

MATERIAL REVISED, ADDED, OR DELETED.

6.0 INDUSTRIAL HEALTH AND SAFETY REQUIREMENTS (cont.)

6.7 Any circumstance which could have resulted in an intake of radioactive materials by inhalation, ingestion or absorption shall immediately be reported to a supervisor. The supervisor shall immediately report the circumstance of possible radioactive materials intake to Radiological Safety for evaluation. The involved employees shall report to Medical Services at the end of their shift or as directed to submit a urine sample and again report at the start of their next shift to submit another urine sample.

7.0 PROCEDURE

7.1 Work-In-Process Inventory

NOTE: The Work-In-Process (WIP), or "Book" Inventory shall be conducted at the end of the interim months of a physical inventory. Only items changed from the last Physical Inventory shall be given to the Nuclear Material Reporting Specialist. During this inventory there is no required process shut down.

7.1.1 Empty all dust collectors used during the month (Refer to SOP 2-C-701).

7.1.2 Weigh drums of residues (Refer to SOP 2-C-909) produced during the month, including the dust collector residue drum.

7.1.3 Complete the applicable "Inventory List" sheet (See Figure 1 thru 4) as follows:

7.1.3.1 Use the same sample date, number, outage and gallons on tanks that did not change since the last Physical Inventory.

7.1.3.2 Take a four-ounce sample from tanks that have changed.

7.1.3.3 Fill out a "Sample Label" form FMPC-PRO-306 (See Figure 5) and a "Report of Chemical Analysis" Form FMPC-T-200 (See Figure 6). Request analysis for uranium concentration only.

7.2 Preparation for Physical Inventory

NOTE: Physical Inventory shall performed quarterly as specified by MC&A. This inventory requires that operations cease during the inventory preparation and performance. Also all transfer of materials between MBAs shall be discontinued during this period.

MATERIAL REVISED, ADDED, OR DELETED.

7.0 PROCEDURE (cont.)

7.2.1 Digestion Inventory Preparation

7.2.1.1 Empty all dust collectors completely (Refer to SOP 2-C-701).

7.2.1.2 At the Area Supervisors direction, process residue drums through the digestion tank.

7.2.1.3 Shut off feed to digestion tanks.

7.2.1.4 When the material is digested, rabble out the feed system.

7.2.1.5 Consolidate UNH in storage to minimize number of tanks requiring inventory.

7.2.1.6 Clean out empty tanks. Remove "heels" and sediments.

7.2.1.7 Empty and clean out the Metal Dissolver.

7.2.1.8 Drum and weigh metal removed from the dissolver.

7.2.1.9 When cleared by MC&A, replace the metal into the dissolver to minimize drum corrosion.

7.2.1.10 Shutdown, empty, and clean out the E3E-400 Evaporator per the operating procedure.

7.2.1.11 Shutdown, empty, and clean the Hot Raffinate Oliver Filter.

7.2.1.12 Pump the contents of Cake Slurry Hold Tanks F1-313 and F1-318 to Plant 8.

7.2.2 Extraction Inventory Preparation

7.2.2.1 Strip out all UNH in the Extraction System.

NOTE: If possible, completely empty the Extraction System.

7.2.2.2 If possible, pump raffinate to the General Sump.

C - MATERIAL REVISED, ADDED, OR DELETED.

7.0 PROCEDURE (cont.)

7.2.3 Denitration Inventory Preparation

NOTE: If possible, the Boildown and Denitration Systems shall be emptied due to the difficulty in determining the volume and concentration of the liquid.

7.2.3.1 Shutdown the Boildown System per the operating procedure.

7.2.3.2 Using the gulping tool, empty the Denitration Pots.

7.2.3.3 Empty the UO_3 MIlling Operation System.

7.2.3.4 Empty out the Dust Collectors (Refer to SOP 2-C-701).

7.2.3.5 If possible, acid wash and drain the Denitration Pots.

7.2.4 Refinery Sump Inventory Preparation

7.2.4.1 Drain the Refinery Sump to a low level.

7.2.4.2 Empty Tank F1-609 and F1-610.

7.2.4.3 Empty Thickener Tank F2E-602 (Refer to SOP 2-C-601).

7.2.4.4 Pump all RTS to Digestion.

7.3 General Requirements for Conducting the Inventory

7.3.1 Weigh material and residues on hand.

7.3.2 Identify materials and residues per the FMPC Lot Marking Code Book and the applicable Manufacturing Specification for the operation.

7.3.3 Group materials on the storage pad by material code and lot number.

7.3.4 Drain sumps and the Slop Water Storage Tanks to the Refinery Sump.

NOTE: Floor sumps and Slop Water Storage tanks shall be at the lowest practical level on the day of inventory.

R - MATERIAL REVISED, ADDED, OR DELETED.

7.0 PROCEDURE (cont.)

7.4 Performing the Liquid Physical Inventory

> WARNING: LIQUID TO BE SAMPLED CONTAINS NITRIC ACID. CHEMICAL-RESISTANT GLOVES SHALL BE WORN WHEN HANDLING THE SAMPLE TOOL.

7.4.1 Obtain the "Inventory List" sheets (See Figures 1 through 4) from the Refinery Supervisor.

7.4.2 Shut off the agitator in the tank to be inventoried.

7.4.3 Measure the outage of the tank to be inventoried as follows:

7.4.3.1 Locate the benchmark indicated on the applicable "Inventory List" sheet.

NOTE: If the benchmark location is indicated as a 1 or 2, top on the manhole, continue per this procedure.

NOTE: If the benchmark location is indicated as a 3 or A.O.M. (Automatic Outage Meter), take the tank outage per the operating procedure for the vessel.

NOTE: If the benchmark location is a 4, exterior sight glass, take the outage directly from the sight glass.

7.4.3.2 Using a measuring tape, measure the distance from the benchmark to the top of the liquid in the tank.

7.4.3.3 Record the measured outage on the "Inventory List" to the nearest graduation (1/2-inch minimum).

7.4.3.4 Locate the measured outage on the approriate Tank Calibration Chart to determine the gallons of liquid in the tank.

7.4.3.5 Record the gallons on the "Inventory List".

NOTE: There are several tanks in the Refinery where no outage or volume determination can be made. In these cases, indicate the number of gallons in the vessel by circling the gallons indicated if full or MT if the vessel is empty.

MATERIAL REVISED, ADDED, OR DELETED.

7.0 PROCEDURE (cont.)

7.4.4 Start the agitator in the tank to be sampled.

7.4.4.1 If the tank is not equipped with an agitator or the agitator will not start, blow air through the tank discharge line or insert an Air Lance through the top of the tank into the liquid.

7.4.5 Agitate the liquid in the tank for a minimum of one hour.

7.4.6 Sample the tank to be inventoried as follows:

NOTE: When sampling the Boildown and Sparge Tanks, refer to SOP 2-C-409 for special instructions on sampling methods.

7.4.6.1 Check the tank volume and U concentration.

NOTE: If the tank contains less than 10,000 gallons or the liquid has a uranium concentration less than 100 g/l, do not take a bottom sample.

7.4.6.2 Shut off the agitator.

7.4.6.3 Obtain one or two four-ounce jars and one eight ounce sample jar.

NOTE: Use the second four ounce sample jar for tanks requiring bottom sampling.

7.4.6.4 Using a grease pencil, mark the lid of the sample jars with the tank number.

7.4.6.5 Obtain a four ounce sampling tool.

NOTE: Use the tool for taking a sample from the top of the tank.

7.4.6.6 Lower the sampling tool into the tank liquid. Dump the contents back into the tank. Repeat several times to clean the tool.

7.4.6.7 Lower the sampling tool several feet below the surface of the liquid.

R - MATERIAL REVISED, ADDED, OR DELETED.

7.0 PROCEDURE (cont.)

7.4.6.8 Remove the sample from the tank and pour it into the four-ounce jar.

7.4.6.9 Repeat Steps 7.4.6.7 and 7.4.6.8 two more times to fill the eight ounce sample jar.

7.4.6.10 To take a bottom sample, check the bottom of the tank for a sample line.

7.4.6.11 If the tank is equipped with a sample line, place a bucket under the sample line outlet. Open the sample valve and flush the line into the bucket.

7.4.6.12 Place the sample jar under the sample line outlet, open the valve, and take a four ounce sample. Pour the contents of the bucket back into the tank after sampling.

7.4.6.13 If no sample line exists, obtain a four ounce bottom sample tool.

7.4.6.14 Ensure that the agitator is shut off.

> WARNING: THE AGITATOR SHALL BE OFF BEFORE LOWERING SAMPLER INTO THE TANK.

7.4.6.15 Clean out the sampler by lowering the sampler into the tank several times. Dump the contents of the sampler into the tank.

7.4.6.16 Insert the plug into the top of the sampler.

7.4.6.17 Lower the sampler to the bottom of the tank, as near to the center as possible.

7.4.6.18 Pull the chain attached to the top of the sampler to open the sampler.

7.4.6.19 Raise the sampler out of the tank and dump the contents into a four ounce sample jar.

7.4.6.20 Obtain a sample number from the "Sample Log Sheet" Form FMPC-PRO-522 (See Figure 7).

R - MATERIAL REVISED, ADDED, OR DELETED.

7.0 PROCEDURE (cont.)

7.4.6.21 Fill out all information on the "Sample Log Sheet"

7.4.6.22 Record the sample date and the sample number on the applicable "Inventory List".

7.4.6.23 Complete a "Sample Label", Form FMPC-PRO-306 (See Figure 5). Write "INVENTORY" in the "Type of Sample" space.

7.4.6.24 Ensure that the jars and the lids are clean and attach the Sample Labels to the jars.

7.4.6.25 Complete a "Report of Chemical Analyses" Form FMPC-T-200 (See Figure 6). Request Analyses for U g/l. In the "Remarks" space write "INVENTORY".

7.4.6.26 Complete a "Report of Isotopic Analyses" Form FMPC-T-971 (See Figure 8). Request Analyses for Gamma U^{235}. In the "Remarks" space write "INVENTORY".

7.4.7 Pack the samples into a box in an orderly and secure manner for transfer to the lab.

7.4.8 Inform the supervisor that samples are ready for shipment to the lab.

7.4.9 Deliver the completed "Inventory List" to the supervisor.

7.5 Performing the Solid Material Physical Inventory

7.5.1 Obtain "Inventory Record" sheets, Form FMPC-ES&H-366 (See Figure 9) and "Inventory Color Labels (See Figure 10) from the Nuclear Material Reporting Specialist.

7.5.2 Record the drum and/or lot identification numbers of drums in storage at the Refinery on the "Inventory Record" sheet.

7.5.3 Using a grease pencil, write the lot identification number on the "Inventory Color Label".

NOTE: One label can represent one drum, one skid, or one lot. This information should also be included on the label.

R - MATERIAL REVISED, ADDED, OR DELETED.

7.0 PROCEDURE (cont.)

7.5.4 Remove labels remaining from previous inventories. If the label cannot be removed, attach the new label over the old label.

7.5.5 After all drums are identified and recorded, return the "Inventory Record" sheets to the Nuclear Material Reporting Specialist.

NOTE: The Nuclear Material Reporting Specialist shall check the Inventory Record with the daily records. Any deviations will be checked to insure accuracy of the inventory.

8.0 APPLICABLE FORMS

8.1 No form number, "Digestion Area Inventory List"

8.2 No form number, "Combined Raffinate Area Inventory List"

8.3 No form number, "Extraction and Denitration Areas Inventory List"

8.4 No form number, "Refinery Sump, NAR, and Chemical Storage Areas Inventory List"

8.5 FMPC-PRO-306, "Sample Label"

8.6 FMPC-T-200, "Report of Chemical Analyses"

8.7 FMPC-PRO-522, "Sample Log Sheet"

8.8 FMPC-T-971, "Report of Isotopic Analyses"

8.9 FMPC-ES&H-366, "Inventory Record"

8.10 No form number, "Inventory Label"

* MATERIAL REVISED, ADDED, OR DELETED.

FMPC - REFINERY OPERATION
Digestion Area

INVENTORY LIST

For Month _____

TANK NUMBER	MATERIAL DESCRIPTION	SAMPLE DATE	SAMPLE NUMBER	BENCH-MARK *	MEASURED OUTAGE	GALLONS	WIP CODE	ASSAY U g/l	% U235
D1-1				1					
D1-2				1					
D1-3				1					
D1-4				1					
D1-7				1					
D1-10				1					
D1-11				1					
F1-1				1					
F1-2				1					
F1-25	EXT.FEED(UNH)			1					
F1-26	EXT.FEED(UNH)			1					
F1-25A	SLOP WATER			2					
F1-26A	SLOP WATER			2					
NE				2					
NW				2					
SE				2					
SW				2					
MET.DIS.				2					
W.M.D.				2					
E.M.D.				2					
F2-605				2					
F2-606				2					
F2-607				2					
F2-608				2					

*BENCHMARK: 1 - IN MANHEAD; 2 - TOP LIP OF MANHEAD

In the situations when the tank is Empty, indicate this by writing MT in the GALLONS column.

TAKEN BY: _____

CHECKED BY: _____

DIGESTION AREA INVENTORY LIST
Figure 1

R - MATERIAL REVISED, ADDED, OR DELETED.

FMPC - REFINERY OPERATION
Hot & Combined Raffinate Areas

INVENTORY LIST

For Month _____

TANK NUMBER	MATERIAL DESCRIPTION	SAMPLE DATE	SAMPLE NUMBER	BENCH-MARK *	MEASURED OUTAGE	GALLONS	WIP CODE	ASSAY U g/l	% U235
COMBINED RAFFINATE									
F1-310				1					
F1-311				1					
F1-312				1					
F1-317				1					
F1-400				1					
F1-401				1					
F1-402				1					
F1-403				1					
F1-405				1					
F1-407				1					
F3E-404				1					
F3E-405				1					
F3E-406				1					
F3E-408	EVAP.FEED/UNH			2					
F3E-409	EVAP.FEED/UNH			2					
HOT RAFFINATE									
F1-301	FILT.FEED/UNH			2					
F1-302	FILT.FEED/UNH			2					
F1-303	FILT.FEED/UNH			2					
F1-308	FILTRATE /UNH			2					
F1-309	FILTRATE /UNH			2					
F1-313	CAKE SLURRY			2					
F1-318	CAKE SLURRY			2					

*BENCHMARK: 1 - IN MANHEAD; 2 - TOP LIP OF MANHEAD

In the situations when the tank is Empty, indicate this by writing MT in the GALLONS column.

TAKEN BY: _____

CHECKED BY: _____

COMBINED RAFFINATE AREA INVENTORY LIST
Figure 2

R - MATERIAL REVISED, ADDED, OR DELETED.

FMPC - REFINERY OPERATION
Extraction & Denitration Areas

INVENTORY LIST

For Month

TANK NUMBER	MATERIAL DESCRIPTION	SAMPLE DATE	SAMPLE NUMBER	BENCH-MARK *	MEASURED OUTAGE	GALLONS	WIP CODE	ASSAY U g/l	% U235
EXTRACTION									
D1-100	"A"COLUMN/UNH					708 / MT			
D1-112	"C"COLUMN/UNH					1585 / MT			
D1-109	SATURATOR/UNH			2					
F2E-103	DECANTER /UNH					1095 / MT			
D1-120	"CP"SURGE/UNH					260 / MT			
Y-7A	"AP"SURGE/UNH					316 / MT			
X-8	"AP"SURGE/UNH					200 / MT			
D1-129	SLOP WATER			2					
D1-130	SLOP WATER			2					
D1-131	SLOP WATER			2					
17A	DIRTY SOLVENT			2					
17B	DIRTY SOLVENT			2					
17C	DIRTY SOLVENT			2					
DENITRATION									
F3E-222	OK LIQUOR/UNH			2					
F3E-223	OK LIQUOR/UNH			2					
F3E-224	OK LIQUOR/UNH			2					
F3E-225	OK LIQUOR/UNH			2					
D1-208	BOILDOWN /UNH			3					
D1-209	BOILDOWN /UNH			3					
D1-210	POT FEED /UNH			3					
D1-211	POT FEED /UNH			3					
D1-212	POT FEED /UNH			3					
F3E-220	SCRUBBER ACID			4					
D1-207	DEN. POT /UNH					250 / MT			
D1-213	DEN. POT /UNH					250 / MT			
D1-215	DEN. POT /UNH					250 / MT			
D1-216	DEN. POT /UNH					250 / MT			

*BENCHMARK: 2 = TOP LIP OF MANHEAD; 3 = A.O.M.; 4 = SIGHT GLASS

In the situations when the tank is Empty, indicate this by writing MT in the GALLONS column.

During WIP Inventories indicate the gallons by circling whether the full gallons or MT.

TAKEN BY: _____

CHECKED BY: _____

EXTRACTION AND DENITRATION AREAS INVENTORY LIST
Figure 3

R - MATERIAL REVISED, ADDED, OR DELETED.

FMPC - REFINERY OPERATION
Refinery Sump, N.A.R., &
Chemical Storage Areas

INVENTORY LIST

For Month _____

TANK NUMBER	MATERIAL DESCRIPTION	SAMPLE DATE	SAMPLE NUMBER	BENCH-MARK *	MEASURED OUTAGE	GALLONS	WIP CODE	ASSAY U lb/g	% U235
REFINERY SUMP									
F2E-601	SLOP WATER			2					
F1-608	SLOP WATER			2					
F1-609	SLOP WATER			2					
F1-610	SLOP WATER			2					
F1-612	R.T.S.			2					
F2E-602	THICKNER					10000 /MI			
NITRIC ACID RECOVERY								U lb/g	NORM.
EAST	WEAK ACID					1800 / MI			
WEST	WEAK ACID					1800 / MI			
F2-22	WEAK ACID			2					
F2-23	WEAK ACID			2					
F2-24	WEAK ACID			2					
F2-25	WEAK ACID			2					
F3E-7	SLOP WATER			3					
CHEMICAL STORAGE		LOCATION						U lb/g	NORM.
F1-23	NITRIC ACID	DIGEST.		3					12
F1-24	NITRIC ACID	DIGEST.		3					
F1-511	NITRIC ACID	EXTRACT.		4					12
F1-613	NITRIC ACID	REF.SUMP		4					12
F1-174	CAUSTIC	EXTRACT.		2					
F1-321	CAUSTIC	HOT RAFF		2					
F1-512	SOLVENT**	EXTRACT.		3					
F2E-501	TBP	EXTRACT.		3					
F2E-502	KEROSENE	EXTRACT.		3					
5A	SOLVENT**	EXTRACT.		2					
5B	SOLVENT**	EXTRACT.		2					
D1-118	SULFURIC ACID	EXTRACT.		3					

*BENCHMARK: 2 = TOP LIP OF MANHEAD; 3 = A.O.M.; 4 = SIGHT GLASS
**SOLVENT = 25% TBP + 75% KEROSENE

In the situations when the tank is Empty, indicate this by writing MI in the GALLONS column.

TAKEN BY: _____

CHECKED BY: _____

REFINERY SUMP, NAR, AND CHEMICAL STORAGE AREAS INVENTORY LIST
Figure 4

R - MATERIAL REVISED, ADDED, OR DELETED.

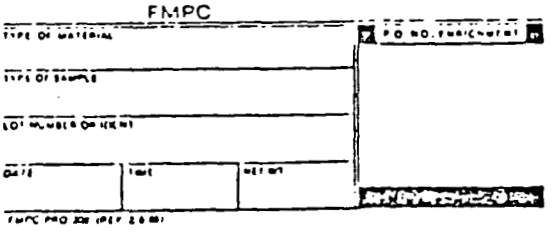

SAMPLE LABEL
FORM NO. FMPC-PRO-306
Figure 5

D - MATERIAL REVISED, ADDED, OR DELETED.

FMPC
REPORT OF CHEMICAL ANALYSES
(NOTE Write Firmly — Part 4 must be legible)

Lab Nos _____

Lot No _____

Analyses Requested _____

MATERIAL

ACCOUNT NO

DATE SAMPLED

SUBMITTED BY

REMARKS

LAB. NO.	IDENTIFICATION	ANALYTICAL DATA					

NO	DISTRIBUTION OF COPIES
1	Originator
2	Extra Copy
3	Quality Assurance
4	Analytical (record copy)

Approved By _____ Date of Report _____

REPORT OF CHEMICAL ANALYSES
FORM NO. FMPC-T-200
Figure 6

P - MATERIAL REVISED, ADDED, OR DELETED.

FMPC

PRODUCTION OPERATIONS - REFINERY OPERATION

SAMPLE LOG SHEET

SAMPLE DATE	SAMPLE TIME	*SAMPLE NUMBER	SAMPLE POINT	TYPE OF MATERIAL	BATCH NUMBER OR GALLONS	TOTAL U	INSOL U	HNO3 NORM	pH	SAT. U	SP G.	SAT SP G	NH3	Fe	Na	F	Al	Cl	WTS SOLIDS	U235	Pu	Np	OTHER

* Sample numbers are to start with a letter based on location (see below) then a number in sequence, except at the beginning of the month when the number goes back to 1

A - NAR Hot Raffinate or Combined Raffinate
B - Refinery Sump.
C - Digestion or Metal Dissolver.
D - Denitration.
E - Extraction.
F - Away from Refinery

(FMPC PRO 522 (REV 10-89))

SAMPLE LOG SHEET
FORM NO. FMPC-PRO-522
Figure 7

R - MATERIAL REVISED, ADDED, OR DELETED.

FMPC
REPORT OF ISOTOPIC ANALYSES
(NOTE: Write Firmly — Part 5 must be legible)

Assay Requested:
^{232}U ___ ^{233}U ___ ^{235}U ___ ^{238}U ___
^{230}Th ___ ^{226}Ra ___ ^{228}Ra ___ Pu ___
^{237}Np ___ Other (Specify) ___

Assay Method:
Gamma ___ Mass Spec ___
Other (Specify) ___

FOR ANALYTICAL USE ONLY

Assay Basis:	Assay Units:	
Uranium ___	wt % ___	d/m/l ___
Sample ___	ppm ___	d/m/g ___
^{235}U ___	ppb ___	d/m ___

NO.	DISTRIBUTION OF COPIES
1	Lab File
2	Originator
3	Quality Control
4	Extra Copy
5	Analytical (RETURN COPY)

DATE SAMPLED:	SUBMITTED BY:	LAB NO.:
ACCOUNT/P.O. NO.:	LOT NO.:	
REMARKS:		MATERIAL:

LABORATORY NUMBER	SUBMITTER'S IDENTIFICATION	ANALYTICAL DATA

APPROVED BY:	CHECKED BY:	DATE OF REPORT:

REPORT OF ISOTOPIC ANALYSES
FORM NO. FMPC-T-971
Figure 8

P - MATERIAL REVISED, ADDED, OR DELETED.

FMPC
E S & H - MATERIALS CONTROL AND ACCOUNTABILITY
INVENTORY RECORD
☐ PHYSICAL ☐ WIP

DATE	INVENTORY SHEET NUMBER
PLANT	AREA / NUCLEAR MATERIAL

LINE NO	BADGE NUMBER / CHECKED BY	ITEM NO.[1]	LOT NUMBER: P O NUMBER	SOURCE	CLASS	MATERIAL	SEQUENCE	MBA	ID[2] / STG LOC	QUANTITY	NET WEIGHT POUNDS
1											
2											
3											
4											
5											
6											
7											
8											
9											
10											
11											
12											
13											
14											
15											
16											
17											
18											
19											
20											
21											
22											
23											
24											

[1] INGOT NUMBER, CERBY NUMBER, DRUM NUMBER, ETC
[2] EG., DERBIES, INGOTS, BOXES, POTS, ETC.

INVENTORY RECORD
FORM NO. FMPC-ES&H-366
Figure 9

P - MATERIAL REVISED, ADDED, OR DELETED.

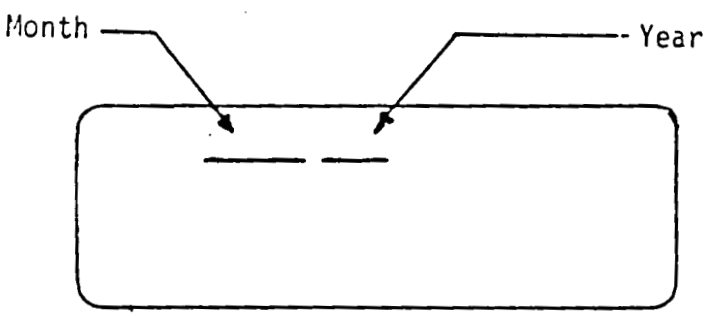

INVENTORY LABEL
Figure 10

R - MATERIAL REVISED, ADDED, OR DELETED.

RECORD OF ISSUE/REVISIONS

PAGE	DATE	DESCRIPTION AND AUTHORITY
Unknown	03-06-67	Original Issue.
Unknown	11-02-72	Reissued.
2, 3, 4, 5, 6, 8	07-14-76	General updating per Change in Standard Operating Procedure Request No. 157, initiated by E. M. Nutter.
1 thru 3	10-22-82	Requirement that boildown and sparge tanks be empty for nuclear materials inventory deleted per Change in SOP Request No. 761, initiated by R. L. Gardner.
1 thru 21	05-03-89	Reissued to update to current practices per Request No. P89-056, initiated by J. B. Patton.

LIST OF EFFECTIVE PAGES

PAGE	DATE
1 thru 21	05-03-89

MATERIAL REVISED, ADDED, OR DELETED.

WESTINGHOUSE MATERIALS COMPANY OF OHIO - FMPC	Page 1 Page Revision Date:	
OPERATIONS PROCEDURE	PLANT 4 NUCLEAR MATERIAL INVENTORY	SOP 4-C-903 Section: Manufacturing Plant: 4
Authorization: R. L. Gardner	Supersedes: 4-C-903, 03-30-83	Issue Date: 07-19-89

1.0 PURPOSE

The purpose of this document is to establish the procedure for taking an inventory of nuclear materials in Plant 4.

2.0 APPLICABILITY

This procedure is applicable to nuclear material located in Plant 4.

3.0 RESPONSIBILITIES

3.1 The supervisor shall be responsible for the following:

3.1.1 Coordinating with the Plant NM Specialist to conduct and expedite the inventory.

3.1.2 Checking the "Notice of Inventory Letter" for instructions.

3.1.3 Directing the shutdown of Plant 4 operations.

3.1.4 Halting material transfer between MBAs.

3.1.5 Acting as an inventory completion team member to determine that the inventory is complete.

3.1.6 Directing that operations be resumed after notification by MC&A that inventory is concluded.

3.1.7 Informing operators of the Standard Operating Procedures that apply to the process or tasks being performed.

3.1.8 Estimating holdup remaining in systems or equipment and providing the Plant 4 NM Specialist with the estimate, in writing.

3.1.9 Obtaining approval of the MC&A Manager, the MC&A Supervisor, or the designated alternate if deviation from this SOP or the "Notice of Inventory Letter" is required.

3.1.10 Obtaining a "Work Permit", "Confined Space Entry Permit" or "Radiation Work Permit" from Q&S when work conditions require a permit or if the area is posted as a contamination control zone or confined space.

3.1.11 Assist in reconciling discrepancies and erroneous material identification.

3.0 RESPONSIBILITIES (cont.)

3.2 Operators shall be responsible for preparing Plant 4 for inventory and for taking an inventory of green salt, residues, orange oxide, and scrap green salt.

3.3 The Plant NM Specialist shall be responsible for the following:

3.3.1 Coordinating with the supervisor to conduct the inventory.

3.3.2 Issuing documentation to inventory teams.

3.3.3 Receiving and verifying completed documents returned by inventory teams.

3.3.4 Listing information for entry into the Physical Inventory System.

3.3.5 Assisting in the determination that inventory is complete.

3.3.6 Summarizing quantities shown on "Inventory Record" sheets, comparing the quantities with book records and computer data base, and reconciling the differences.

3.3.7 Reviewing all interplant transfers reflecting receipts and/or shipments of non-routine materials to ensure that unusual materials are included in the inventory.

3.3.8 Entering the inventory sheets into the Physical Inventory System.

3.3.9 Generating the inventory for the MC&A Accountants reports.

3.3.10 Ensuring that all used and/or unused inventory sheets have been returned.

3.4 MC&A shall be responsible for issuing a "Notice of Inventory Letter", assisting to determine that all nuclear materials have been inventoried, and notifying the Plant 4 Supervisor when the inventory has been obtained and reconciled.

4.0 DEFINITIONS

None

5.0 REFERENCES

5.1 SOP 20-C-904, "General Nuclear Safety Requirements"

R - MATERIALS REVISED, ADDED, OR DELETED.

6.0 INDUSTRIAL HEALTH AND SAFETY REQUIREMENTS

6.1 A defined safety system is not involved.

6.2 Leather or leather-palm gloves shall be worn while handling containers, nuclear material, and sharp-edged or abrasive material.

6.3 Chemical resistant gloves shall be worn when sampling and/or performing physical inventory of corrosive/acid/caustic liquids.

6.4 Respiratory protection specified by Industrial Hygiene and Safety for chemical contaminants or by Radiological Safety for radioactive contaminants shall be worn depending on existing conditions.

6.5 Safety glasses shall be worn unless other eye protection is required.

6.6 Cover goggles shall be worn when there is a possibility of exposure to dust, organic solvent, acid, caustic, or other potentially hazardous substance.

6.7 Skids of non-pyrophoric material may be stacked three high unless otherwise specified by the nuclear safety requirements of the applicable Manufacturing Specification.

6.8 Skids shall contain a maximum of four fifty-five gallon drums or five thirty-gallon drums.

6.9 Material identified as being plutonium contaminated shall be kept segregated from other nuclear materials being inventoried.

6.10 Spills that occur while collecting and packaging nuclear materials for inventory shall be cleaned as soon as possible.

6.11 Drums shall be lifted and/or moved by mechanical material handling equipment, not by hand.

6.12 Nuclear safety limits and restrictions of SOP 20-C-904 and/or the applicable manufacturing specifications for the procedure or process shall be followed at all times.

6.13 Anti-contamination clothing specified by Q&S shall be worn while working in a contaminated enclosure.

R - MATERIALS REVISED, ADDED, OR DELETED.

6.0 INDUSTRIAL HEALTH AND SAFETY REQUIREMENTS (cont.)

6.14 Any circumstance which could have resulted in an intake of radioactive materials by inhalation, ingestion or absorption shall immediately be reported to a supervisor. The supervisor shall immediately report the circumstance of possible radioactive materials intake to Radiological Safety for evaluation. The involved employees shall report to Medical Services at the end of their shift or as directed to submit a urine sample and again report at the start of their next shift to submit another urine sample.

7.0 PROCEDURE

7.1 Preparation for Inventory

NOTE: Physical inventories require that operations cease during inventory preparations; transfers of materials between MBAs may be halted and processing equipment be emptied and cleaned out. All residues generated during cleanout shall be drummed, identified, weighed, and sampled as directed by the Plant NM Specialist.

7.1.1 At the supervisors direction, perform the following:

NOTE: The supervisor shall specify the SOP and/or manufacturing specification that is applicable to the task or process being performed.

7.1.1.1 Empty the portable vacuum cleaners, portable dust collectors, and dust collectors.

7.1.1.2 Check blender weigh-hoppers. Empty any material remaining in the hoppers into the blender.

7.1.1.3 Empty the packaging systems blender and packaging hopper and package UF_4.

7.1.1.4 Check that drum dumping stations are empty and cleaned.

7.1.1.5 Empty the product weigh bins and horizontal and vertical conveyor systems.

7.1.1.6 Transfer residues to the first floor for weighing and tagging.

7.1.1.7 Weigh containers of residues.

7.1.1.8 Place containers on skids with identification markings outward.

R - MATERIALS REVISED, ADDED, OR DELETED.

7.0 PROCEDURE (cont.)

7.1.1.9 Weigh partially full UO_3 hoppers within the plant.

NOTE: Do not weigh hoppers that are discharging to reactor banks.

7.1.1.10 Remove empty hoppers from reactor banks or shut off feed into or banks. Run material in system to deadbed.

7.1.1.11 Calculate the amount of heel remaining in empty hoppers, cylinders or other containers by the difference between the gross weight and empty weight.

7.1.1.12 Check for, and remove, labels from previous inventories.

7.2 Taking Inventory

NOTE: The Plant NM Specialist will issue "Inventory Record" sheets, Form FMPC-CONT-366 (See Figure 1), to the inventory teams. The teams shall inventory green salt, residues, orange oxide, and scrap green salt, and record the inventory data on an "Inventory Record" sheet.

NOTE: An "Inventory Label" (See Figure 2) printed with the month and year shall be applied to drums or skids. Labels that represent more than one item shall have a notation of what the label represents (one skid-four drums, P. O. No., net weight). Also, a notation shall be made for single items (one skid-one drum, P. O No., net weight). A label shall only represent items in a single grouping.

7.2.1 Record actual weights of partially full UO_3 hoppers.

7.2.2 Record hoppers and weights of U_3O_8 in hoppers connected to reactor banks.

NOTE: Weight of U_3O_8 is determined by the scale dials on third floor or the Plant 4 solids feed control system Monorobot Scale.

7.2.3 Record UO_3 and UF_4 "heels" in empty hoppers.

NOTE: Heel weight is determined by subtracting hopper tare weight from "empty" gross weight.

7.2.4 Record cans of UF_4 "heels" from packaging units. Code the heels as work-in-process.

R - MATERIALS REVISED, ADDED, OR DELETED.

7.0 PROCEDURE (cont.)

7.2.5 Record green salt by hopper, lots, or drums.

NOTE: Green salt weight shall be retrieved from the computer data base by the Plant NM Specialists.

7.2.6 Record drums of residues.

NOTE: List drum number, P. O., source, material class, material type, sequence, MBA, location, quantity,and net weight from the stenciling on the drums.

7.2.7 Record orange oxide by hopper or drum.

NOTE: The weights shall be retrieved by the Plant NM Specialist from the computer data base.

7.2.8 Record lots of scrap green salt.

NOTE: Weights shall be retrieved from the computer data base by the Plant NM Specialist.

7.2.9 Turn in all documentation to the Plant NM Specialist.

7.3 Work-In-Process Inventory

NOTE: A work-in-process inventory, ("Book Inventory") shall be prepared at the end of interim months of a physical inventory. Residues and uranium contained by-products that have been generated during the inventory period shall be packaged, weighed and lot-marked by and time stated in the MC&A Inventory Letter. All production must be entered by the deadline established.

7.3.1 Physically inventory heels, residues, waybins, blenders, and uncertified drums (oversize materials) on which production has not been taken.

NOTE: The Plant NM Specialist shall retrieve information on work-in-process green salt from the computer data base and holdup in hoppers from manual records. After the material is inventoried and reconciled, the Specialist shall summarize the information on an inventory record and enter the information into the Physical Inventory System.

8.0 APPLICABLE FORMS

8.1 FMPC-CONT-366, "Inventory Record"

R - MATERIALS REVISED, ADDED, OR DELETED.

FMPC
CONTROLLER'S ORGANIZATION - MATERIALS CONTROL AND ACCOUNTABILITY
INVENTORY RECORD
☐ PHYSICAL ☐ WIP

DATE	INVENTORY SHEET NUMBER	
PLANT	AREA	NUCLEAR MATERIAL

LINE NO	BADGE NUMBER / CHECKED BY	ITEM NO [1]	LOT NUMBER					MBA	ID [2] / STG. LOC.	QUANTITY	NET WEIGHT POUNDS
			P O NUMBER	SOURCE	CLASS	MATERIAL	SEQUENCE				
1											
2											
3											
4											
5											
6											
7											
8											
9											
10											
11											
12											
13											
14											
15											
16											
17											
18											
19											
20											
21											
22											
23											
24											

[1] INGOT NUMBER, DERBY NUMBER, DRUM NUMBER, ETC
[2] EG., DERBIES, INGOTS, BOXES, POTS, ETC.

FMPC-CONT-366 (REV 7-14-88)

INVENTORY RECORD
FMPC-CONT-366
FIGURE 1

R - MATERIALS REVISED, ADDED, OR DELETED.

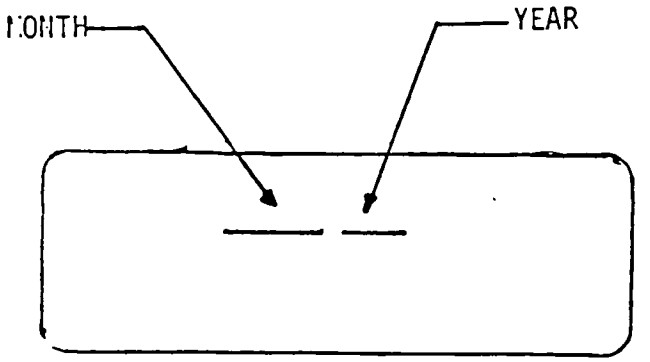

INVENTORY LABEL
FIGURE 2

R - MATERIALS REVISED, ADDED, OR DELETED.

RECORD OF ISSUE/REVISION

PAGE	DATE	DESCRIPTION/AUTHORITY
1 thru 6	02-28-66	Procedure issued.
1	08-07-70	Updated Page 1, to emphasize need to run reactors to dead bed for each quarterly inventory. Eliminate requirement for monthly physical inventory on >96% 235U material. Per B. Gessiness.
1 thru 7	03-30-83	Reissued.
1 thru 9	07-19-89	Reissued to update inventory procedures per Request P88-218 initiated by C. A. Hill.

LIST OF EFFECTIVE PAGES

PAGE	DATE
1 thru 9	07-19-89

R - MATERIALS REVISED, ADDED, OR DELETED.

WESTINGHOUSE MATERIALS COMPANY OF OHIO - FMPC	Page 1 Page Revision Date: None	
PRODUCTION OPERATIONS PROCEDURE	Title: PLANT 5 NUCLEAR MATERIAL INVENTORY	SOP 5-C-911 Section: Metals Plants Plant: 5
Authorization: F. J. Gurney	Supersedes: None	Issue Date: 11-22-88

1.0 PURPOSE

The purpose of this document is to establish the procedure for taking a physical inventory of nuclear materials in Plant 5.

2.0 APPLICABILITY

This procedure is applicable to nuclear material located in Plant 5.

3.0 RESPONSIBILITIES

3.1 The supervisor shall be responsible for the following:

3.1.1 Coordinating with the Plant NM Specialist to conduct the inventory.

3.1.2 Checking the "Notice of Inventory Letter" for instructions.

3.1.3 Directing the shut down of Plant 5 operations.

3.1.4 Halting material transfers between MBAs.

3.1.5 Acting as an inventory completion team member to determine that the inventory is complete.

3.1.6 Directing that operations be resumed after notification by MC&A that inventory is concluded.

3.1.7 Informing operators of the Standard Operating Procedures that apply to the process or tasks being performed.

3.2 Operators shall be responsible for preparing the plant for inventory as directed by the supervisor and taking an inventory of green salt, MgF_2, slag, derbies, flats, residues, and ingots in accordance with this SOP.

3.3 The Plant NM Specialist shall be responsible for the following:

3.3.1 Coordinating with the supervisor to conduct the inventory.

3.3.2 Issuing documentation to inventory teams.

3.3.3 Receiving and verifying completed documents returned by inventory teams.

3.3.4 Listing information for entry into the Physical Inventory System.

R - MATERIAL REVISED, ADDED, OR DELETED.

3.0 RESPONSIBILITIES (cont.)

3.3.5 Assisting in the determination that inventory is complete.

3.3.6 Preparing an interplant transfer to cover the net weight of samples sent to the laboratory during the month ending with the inventory.

3.3.7 Summarizing quantities shown on backup sheets, comparing the quantities with book records and computer data base, and reconciling the differences.

3.3.8 Reviewing all interplant transfers reflecting receipts and/or shipments of non-routine materials to ensure that unusual materials are included in the inventory.

3.3.9 Entering the inventory sheets into the Physical Inventory System.

3.3.10 Generating the inventory for the MC&A Accountants reports.

3.3.11 Ensuring that all used and/or unused inventory sheets have been returned.

3.4 MC&A shall be responsible for issuing a "Notice of Inventory Letter", assisting to determine that all nuclear materials have been inventoried, and notifying the Plant 5 supervisor when the inventory has been obtained and reconciled.

4.0 DEFINITIONS

None

5.0 REFERENCES

5.1 SOP 5-C-701, "Plant 5 Dust Collectors"

5.2 SOP 5-C-902, "Operator Scale Checking in Plant 5"

6.0 INDUSTRIAL HEALTH AND SAFETY REQUIREMENTS

6.1 A defined safety system is not involved.

6.2 Leather or leather-palm gloves shall be worn while handling containers, nuclear material, and sharp edged or abrasive material.

6.3 Respiratory protection specified by Industrial Hygiene and Safety or Environmental and Radiation Monitoring shall be worn depending on existing conditions.

R - MATERIAL REVISED, ADDED, OR DELETED.

6.0 INDUSTRIAL HEALTH AND SAFETY REQUIREMENTS (cont.)

6.4 Safety glasses shall be worn unless other eye protection is required.

6.5 Cover goggles shall be worn when there is a possibility of exposure to dust, organic solvent, acid, or caustic.

6.6 Skids of material shall be stacked as specified in the Nuclear Safety Requirements of the applicable Manufacturing Specification.

6.7 Drums shall be lifted and/or moved by mechanical material handling equipment, not by hand.

6.8 Nuclear Safety limits and restrictions of applicable manufacturing specifications for the procedure or process shall be followed at all times.

6.9 Anti-contamination clothing specified by OS&H shall be worn when entering a contaminated enclosure.

6.10 Any circumstance which could have resulted in an intake of radioactive materials by inhalation, ingestion or absorption shall immediately be reported to a supervisor. The supervisor shall immediately report the circumstance of possible radioactive materials intake to Radiological Safety for evaluation. The involved employees shall report to Medical Services at the end of their shift or as directed to submit a urine sample and again report at the start of their next shift to submit another urine sample.

7.0 PROCEDURE

NOTE: Physical inventories require that operations cease during inventory preparations; transfers of materials between MBAs may be halted and processing equipment be emptied and cleaned out. All residues generated during cleanout shall be drummed, identified, weighed, and sampled if necessary.

NOTE: The supervisors shall specify the SOP that is applicable to the process or task being performed.

7.1 Preparation for Inventory in the Reduction Area

7.1.1 At the supervisors direction, perform the following:

7.1.1.1 Remove Inventory Labels from drums, skids, or pallets. Place a current Inventory Label over the old label.

R - MATERIAL REVISED, ADDED, OR DELETED.

7.0 PROCEDURE (cont.)

7.1.1.2 Empty F-Machine blenders.

7.1.1.3 Vacuum loose UF_4 and blend material from F-Machine surfaces.

7.1.1.4 Empty reduction area dust collectors and vacuum cleaners (refer to SOP 5-C-701).

7.1.1.5 Remove, segregate, and drum residues from the Rockwell furnaces.

7.1.1.6 Drain and clean the Derby Fire Quench Tank.

7.1.1.7 Check scales to be used for weighing (refer to SOP 5-C-902).

7.1.1.8 Weigh containers of residue on print scale.

7.1.1.9 Stencil residue containers with weight and lot number and place the drums on skids so that markings are visible.

7.1.1.10 Check the material in Jolter Hoppers, conveyors to hoppers, conveyor from Building 55, and capping stations. Notify the supervisor of the condition and proceed as directed.

NOTE: Jolter hoppers, conveyors to hoppers and conveyor from Building 55 shall be either full or empty. Capping stations preferably be full or empty, but are measurable if partially filled.

7.1.1.11 Ensure that Bins F5E-250 and -251 are filled to capacity.

7.1.1.12 Clean the Breakout Station.

7.1.1.13 Run out the Slag Conveyor System from breakout bins to Building 55.

7.1.1.14 Ensure that Bins 1 and 2 in Building 55 are at the lowest practical level.

7.1.1.15 Run the Ball Mill to dead bed.

7.1.1.16 Empty the dust collector in Building 55 (refer to SOP 5-C-701).

R - MATERIAL REVISED, ADDED, OR DELETED.

7.0 PROCEDURE (cont.)

7.1.1.17 If necessary, empty Bins 3, 3A, 4 and "Old" Slag Bin.

7.1.1.18 List the quantities of U-bearing MgF_2 in the full or empty Plant 5 slag system bins.

7.1.1.19 Ensure that Rockwell furnaces are empty and clear of uranium residues.

NOTE: If a furnace pot is left in the furnace or if a furnace has not or cannot be cleaned of residues, then the necessary data to evaluate for nuclear material holdup shall be prepared.

7.1.1.20 Stop breakout before inventory and clean and weigh derbies.

7.1.1.21 Inspect the reduction area (including the third floor) and building 55 for nuclear materials and complete the "Inventory Preparation Checklist" (see Table 1).

7.2 Remelt Area Preparation for Inventory

7.2.1 At the supervisor's direction, perform the following:

7.2.1.1 Clean the Burnout Enclosure.

7.2.1.2 Estimate the amount of black oxide present in the robot alleys.

NOTE: Fiscal inventory requires complete cleanout.

7.2.1.3 Count and group molds, crucibles and mold bottoms, and used crucibles (those empty at inventory time), which are contaminated with uranium.

7.2.1.4 Clean Graphite Break-up Enclosure.

7.2.1.5 Check the scales to be used for weighing materials (refer to SOP 5-C-902).

7.2.1.6 Empty remelt dust collectors (refer to SOP 5-C-701) and pre-skimmers.

7.2.1.7 Remove and drum dust from remelt vacuum cleaners.

7.2.1.8 Remove and drum black oxide at Burnout Canning Stations.

7.2.1.9 Clean Burnout Stations.

R - MATERIAL REVISED, ADDED, OR DELETED.

TABLE 1
REDUCTION AREA
INVENTORY PREPARATION CHECKLIST

Name:_____ Badge/ID:_____ Date/Time:_____

AREA	COMPLETED YES	COMPLETED NO	AREA	COMPLETED YES	COMPLETED NO
UF4 lots in storage			Breakout station vacuum cleaner emptied		
UF4 lots on blender platform			Breakout station dust collector emptied		
Blender emptied			Reduction residues produced prior to 0800 on inventory day		
F-Machine cleaned			Slag conveying system between breakout bins 1 and 2 run to deadbed		
Dust collector emptied			Bins 1 and 2, Building 55, reduced to lowest practical level		
Hoffman vacuum cleaned			Ball Mill run to deadbed		
Furnace pots			Dust collector in Building 55 emptied		
Rockwell furnaces emptied and cleaned of residues			Building 55, bin numbers 3, 3A, 4 and "old" slag bin, emptied		
Pots in air cooling			Capping stations and Bins 250 and 251 full(1).		
Skids of derbies			Jolters full to capacity or empty.		
Breakout station cleaned of uranium and slag			Clean out air cooled and water cooled tanks, pad, and sump pits		

(1) If conditions do not permit filling bins to maximum capacity, outages shall be taken from benchmarks and volumes of materials calculated.

R - MATERIAL REVISED, ADDED, OR DELETED.

7.0 PROCEDURE (cont.)

7.2.1.10 Collect, identify, and weigh, if necessary, all unlotted ingot crops and butt-ends.

7.2.1.11 Remove spill metal from mold tanks and then vacuum the tanks.

7.2.1.12 At the saws, gather chips and sawdust and clean the Saw Stations.

7.2.1.13 Flush second floor drainbox to the floor sump.

7.2.1.14 Flush floor trenches to the floor sump.

7.2.1.15 Pump liquids from the floor sumps.

7.2.1.16 Run pits to the Main Sump Tank.

7.2.1.17 Process all liquids through the Plant 5 sump and filter.

7.2.1.18 Remove and drum sludges from all sumps and from the 6000 gallon Sump Tank.

NOTE: The Sump Tank is located on the west side of Plant 5 at Col. 16A.

7.2.1.19 Clean the sump filter and drum the filter cake.

NOTE: For the fiscal year-end inventory, sludges shall be removed from the ram pits and from the outside trenches and pits.

7.2.1.20 Collect, drum, and weigh uranium metal or residues from the furnace repair area.

7.2.1.21 Deliver remelt residues produced before 0800 the day of the inventory to the residue area.

NOTE: Residues produced after 0800 the day of the inventory shall be given the next lot sequence number(s).

7.2.1.22 Weigh residues on printweigh scales and identify.

NOTE: The supervisor shall turn over production cards representing residues produced during the current report period to the NM Specialist responsible for the MBAs involved.

NOTE: The specialist shall include the residues listed on the production cards in that month's activity lists.

R - MATERIAL REVISED, ADDED, OR DELETED.

7.0 PROCEDURE (cont.)

7.2.1.23 Place all drums on pallets.

NOTE: Ensure that markings are visible.

7.2.1.24 Weigh partially consumed containers of remelt metal. Record the amount of material remaining. Stencil the weight on the containers.

7.2.1.25 Transfer all sample wafers to the Laboratory prior to inventory.

NOTE: Retain incomplete ingot lots at the saw station.

7.2.1.26 Inspect to ensure that the Remelt Area is ready for inventory and fill out the "Remelt Area Inventory Preparation Checklist" (refer to Table 2).

7.3 Taking Inventory

NOTE: The Plant Specialist shall issue the documentation to the inventory teams.

NOTE: An "Inventory Label" (see figure 1) printed with the month and year shall be applied to pallets, drums, and skids. If a label represents more than one item, a notation shall be made on the label of exactly what is represented (for example, "one skid - four drums"). For single items no notation is required.

NOTE: The Plant Specialist shall obtain weights for ingots, flats, derbies, and green salt from the computer data base and list the weights on the "Inventory Record".

7.3.1 Record derbies on an "Inventory Record", Form FMPC-CONT-366 (see figure 2) and on a "Derby Backup Sheet", Form FMPC-CONT-3016-1 (see figure 3).

7.3.2 Record flats on an "Inventory Record" and list flat numbers and cavities on a "Flat NM Inventory Backup Sheet", Form FMPC-CONT-3049 (see figure 4).

7.3.3 Record residues on an "Inventory Record" sheet.

NOTE: The weights from the residues are obtained from the copy of the production record or off the drum.

R - MATERIAL REVISED, ADDED, OR DELETED.

TABLE 2
REMELT AREA
INVENTORY PREPARATION CHECKLIST

Name:_____ Badge/ID:_____ Date/Time:_____

AREA	COMPLETED YES	COMPLETED NO	AREA	COMPLETED YES	COMPLETED NO
Crucible charges accounted for			Ingot Conveyor cleaned		
Remelt metal accounted for			Floor trenches and sumps cleaned		
Heats in process			The 6000 gallon Sump Tank and trench emptied and cleaned(1)		
Empty contaminated crucibles accounted for			Second floor drain box cleaned		
Burnout enclosures cleaned			Ram pits, outside pits and trenches emptied(2)		
Dust collectors emptied			Dusts, oxides, sludges, sump cake, ingot crops and other residues assembled		
Hoffman vacuums emptied			Samples at saws and shipping desk		
Burnout Canning Stations cleaned			Finished ingots		
Separation Booth cleaned			In-process ingots		
Mold Tank spills drummed			Crude ingots		
Saws cleaned			Black oxide in robot alleys estimated(3)		

(1) Located on the west side of Plant 5 at Column 16A.
(2) Required for Fiscal Year end inventory only.
(3) Complete cleaning required for fiscal inventory.

R - MATERIAL REVISED, ADDED, OR DELETED.

7.0 PROCEDURE (cont.)

7.3.4 Record ingots on an "Inventory Record" sheet and an "Ingot NM Inventory Backup Sheet", Form FMPC-CONT-3048 (see Figure 5).

7.3.5 Measure MgF_2 slag in the Slag System and record the outage on an "Inventory Record" sheet.

7.3.6 Record green salt by lot number on an "Inventory Record" sheet.

7.3.7 Record uranium-contaminated molds, crucibles, mold bottom, and used crucibles on the "Flat Inventory Backup Sheet" and an "Inventory Record" sheet.

7.4 Work-in-Process Inventories

NOTE: A work-in-process inventory ("book inventory") shall be prepared at the end of interim months of a physical inventory. Manual records are compared to the computer data base and reconciled. If there are any unreconcilable items, a physical count may be taken. After material is reconciled, the Specialist shall summarize the information on to an inventory sheet and enter the information into the EDP physical inventory system.

8.0 APPLICABLE FORMS

8.1 FMPC-CONT-366, "Inventory Record"

8.2 FMPC-CONT-3016-1, "Derby Backup Sheet"

8.3 FMPC-CONT-3049, "Flat NM Inventory Backup Sheet"

8.4 FMPC-CONT-3048, "Ingot NM Inventory Backup Sheet"

R - MATERIAL REVISED, ADDED, OR DELETED.

AUGUST 1988

INVENTORY LABEL
Figure 1

R - MATERIAL REVISED, ADDED, OR DELETED.

WESTINGHOUSE MATERIALS COMPANY OF OHIO - FMPC	Page 12 Page Revision Date: None	
PRODUCTION OPERATIONS PROCEDURE	Title: PLANT 5 NUCLEAR MATERIAL INVENTORY	SOP 5-C-911 Section: Metals Plants Plant: 5
Authorization: F. J. Gurney	Supersedes: None	Issue Date: 11-22-88

FMPC
CONTROLLER'S ORGANIZATION - MATERIALS CONTROL AND ACCOUNTABILITY
INVENTORY RECORD
☐ PHYSICAL ☐ WIP

DATE	INVENTORY SHEET NUMBER	
PLANT	AREA	NUCLEAR MATERIAL

LINE NO	BADGE NUMBER / CHECKED BY	ITEM NO [1]	LOT NUMBER: P O NUMBER	SOURCE	CLASS	MATERIAL	SEQUENCE	NBA	ID [2] / STG LOC	QUANTITY	NET WEIGHT POUNDS
1											
2											
3											
4											
5											
6											
7											
8											
9											
10											
11											
12											
13											
14											
15											
16											
17											
18											
19											
20											
21											
22											
23											
24											

[1] INGOT NUMBER, DERBY NUMBER, DRUM NUMBER, ETC
[2] EG DERBIES, INGOTS, BOXES, POTS, ETC

FMPC CONT 366 (REV 7-14-88)

INVENTORY RECORD
FMPC-CONT-366
Figure 2

R - MATERIAL REVISED, ADDED, OR DELETED.

FMPC
PRODUCTION OPERATIONS - NUCLEAR MATERIALS INVENTORY
DERBY BACKUP SHEET

Building: _____ Plant _____ Page ____ Of ____

Row: _____ Operation: _____

SKID NO.:		SKID NO.:		SKID NO.:	
DERBY NUMBER	WEIGHT	DERBY NUMBER	WEIGHT	DERBY NUMBER	WEIGHT

SKID NO.:		SKID NO.:		SKID NO.:	
DERBY NUMBER	WEIGHT	DERBY NUMBER	WEIGHT	DERBY NUMBER	WEIGHT

SKID NO.:		SKID NO.:		SKID NO.:	
DERBY NUMBER	WEIGHT	DERBY NUMBER	WEIGHT	DERBY NUMBER	WEIGHT

FMPC-CONT-3016-1 (6-23-88)

DERBY BACKUP SHEET
FMPC-CONT-3016-1
Figure 3

R - MATERIAL REVISED, ADDED, OR DELETED.

WESTINGHOUSE MATERIALS COMPANY OF OHIO - FMPC	Page 14 Page Revision Date: None	
PRODUCTION OPERATIONS PROCEDURE	Title: PLANT 5 NUCLEAR MATERIAL INVENTORY	SOP 5-C-911 Section: Metals Plants Plant: 5
Authorization: F. J. Gurney	Supersedes: None	Issue Date: 11-22-88

FMPC
CONTROLLER'S ORGANIZATION - NUCLEAR MATERIALS INVENTORY
FLAT NM INVENTORY BACKUP SHEET

Area: _____ Plant _____ Page ____ Of ____

Row: _____ Date: _____

FLAT NUMBER	CAVITY	FLAT NUMBER	CAVITY	FLAT NUMBER	CAVITY	FLAT NUMBER	CAVITY	FLAT NUMBER	CAVITY

FMPC-CONT-3049 (8-22-88)

FLAT NM INVENTORY BACKUP SHEET
FMPC-CONT-3049
Figure 4

R - MATERIAL REVISED, ADDED, OR DELETED.

FMPC
CONTROLLER'S ORGANIZATION - NUCLEAR MATERIALS INVENTORY
INGOT NM INVENTORY BACKUP SHEET

Page ____ of ____

Location: _____ Date: _____

SKID NUMBER	INGOT NUMBER	WEIGHT	SKID NUMBER	INGOT NUMBER	WEIGHT

FMPC-CONT 3048 (8 22 88)

INGOT NM INVENTORY BACKUP SHEET
FMPC-CONT-3048
Figure 5

R - MATERIAL REVISED, ADDED, OR DELETED.

RECORD OF ISSUE/AUTHORITY

PAGE	DATE	DESCRIPTION AUTHORITY
1 thru 16	11-22-88	Procedure required for taking inventory in Plant 5 per Request No. P88-191, initiated by S. L. Mundahl.

LIST OF EFFECTIVE PAGES

PAGE	DATE
1 thru 16	11-22-88

R - MATERIAL REVISED, ADDED, OR DELETED.

1.0 PURPOSE

The purpose of this document is to establish the procedure for taking a physical inventory of nuclear materials in Plant 6.

2.0 APPLICABILITY

This procedure is applicable to nuclear material located in the Plant 6 Pickling and Machining areas.

3.0 RESPONSIBILITIES

3.1 The supervisor shall be responsible for the following:

3.1.1 Coordinating with the Plant NM Specialist to conduct the inventory.

3.1.2 Checking the "Notice of Inventory Letter" for instructions.

3.1.3 Directing the shutdown of Plant 6 operations.

3.1.4 Halting material transfer between MBAs.

3.1.5 Acting as an inventory completion team member to determine that the inventory is complete.

3.1.6 Directing that operations be resumed after notification by MC&A that inventory is concluded.

3.1.7 Informing operators of the Standard Operating Procedures that apply to the process or tasks being performed.

3.2 Operators shall be responsible for preparing Plant 6 for inventory and for acting as two person teams to take an inventory of derbies, flats, residues, and cores in accordance with this SOP.

3.3 The Plant NM Specialist shall be responsible for the following:

3.3.1 Coordinating with the supervisor to conduct the inventory.

3.3.2 Issuing documentation to inventory teams.

3.3.3 Receiving and verifying completed documents returned by inventory teams.

R - MATERIAL REVISED, ADDED, OR DELETED.

3.0 RESPONSIBILITIES (cont.)

3.3.4 Listing information for entry into the Physical Inventory System.

3.3.5 Assisting in the determination that inventory is complete.

3.3.6 Preparing an interplant transfer to cover the net weight of sample cores sent to the laboratory during the month ending with the inventory.

3.3.7 Summarizing quantities shown on backup sheets, comparing the quantities with book records and computer data base, and reconciling the differences.

3.3.8 Reviewing all interplant transfers reflecting receipts and/or shipments of non-routine materials to ensure that unusual materials are included in the inventory.

3.3.9 Entering the inventory sheets into the Physical Inventory System.

3.3.10 Generating the inventory for the MC&A Accountants reports.

3.3.11 Ensuring that all used and/or unused inventory sheets have been returned.

3.4 MC&A shall be responsible for issuing a "Notice of Inventory Letter", assisting to determine that all nuclear materials have been inventoried, and notifying the Plant 6 supervisor when the inventory has been obtained and reconciled.

4.0 DEFINITIONS

None

5.0 REFERENCES

None

6.0 INDUSTRIAL HEALTH AND SAFETY REQUIREMENTS

6.1 A defined safety system is not involved.

6.2 Leather or leather-palm gloves shall be worn while handling containers, nuclear material, and sharp edged or abrasive material.

6.3 Respiratory protection specified by Industrial Hygiene and Safety or Environmental and Radiation Monitoring shall be worn depending on existing conditions.

R - MATERIAL REVISED, ADDED, OR DELETED.

6.0 INDUSTRIAL HEALTH AND SAFETY REQUIREMENTS (cont.)

6.4 Safety glasses shall be worn unless other eye protection is required.

6.5 Cover goggles shall be worn when there is a possibility of exposure to dust, organic solvent, acid, or caustic.

6.6 Metal skids may be stacked six high and wood skids stacked eight high unless otherwise specified by Nuclear Safety Requirements of the applicable Manufacturing Specification.

6.7 Drums shall be lifted and/or moved by mechanical material handling equipment, not by hand.

6.8 Nuclear safety limits and restrictions of applicable manufacturing specifications for the procedure or process shall be followed at all times.

6.9 Anti-contamination clothing specificed by OS&H shall be worn while working in a contaminated enclosure.

6.10 Any circumstance which could have resulted in an intake of radioactive materials by inhalation, ingestion or absorption shall immediately be reported to a supervisor. The supervisor shall immediately report the circumstance of possible radioactive materials intake to Radiological Safety for evaluation. The involved employees shall report to Medical Services at the end of their shift or as directed to submit a urine sample and again report at the start of their next shift to submit another urine sample.

7.0 PROCEDURE

7.1 Preparation for Inventory

NOTE: Physical inventories require that operations cease during inventory preparations; transfers of materials between MBAs may be halted and processing equipment be emptied and cleaned out. All residues generated during cleanout shall be drummed, identified, weighed, and sampled if necessary.

NOTE: The supervisor shall specify the SOP that is applicable to the task or process being performed.

7.1.1 At the supervisors direction, perform the following:

R - MATERIAL REVISED, ADDED, OR DELETED.

7.0 PROCEDURE (cont.)

7.1.1.1 Process the chips on the briquetting line.

NOTE: Reduce the inventory of briquettable turnings to a minimum.

7.1.1.2 Move drums of briquettes to the storage pad.

7.1.1.3 Transfer any remaining briquettable chips to the southeast pad for weighing and lot marking.

7.1.1.4 Remove fines from chips conveyors, crusher, washer, and press. Transfer the fines to the southeast pad for weighing and lot marking.

WARNING: FINES ARE PYROPHORIC AND SHALL NOT BE ALLOWED TO ACCUMULATE.

7.1.1.5 Ship depleted and enriched fines to Plant 8 for oxidation.

7.1.1.6 Empty and clean all machines.

7.1.1.7 Process pieces in a batch to the same work-in-progress stage.

7.1.1.8 Arrange and group stored container of cores according to piece type and operation completed.

7.1.1.9 Move metal scrap to the designated storage area for weighing and lot marking.

7.1.1.10 Drain coolant from machines into the coolant trenches or 55 gallon drum. Empty drums into the Clarifier Room Sump.

7.1.1.11 Remove fines and sludges from the machines.

WARNING: FINES AND SLUDGES ARE PYROPHORIC.

7.1.1.12 Drain fines and sludges and transport immediately to the southeast pad for weighing and lot marking.

7.1.1.13 Clean the overhead exhaust lines from machines, coolant trenches, coolant storage tank, Hoffman Clarifier, southeast and northeast storage pad trenches, and the main trench beneath the transfermatic and milling machines.

R - MATERIAL REVISED, ADDED, OR DELETED.

7.0 PROCEDURE (cont.)

7.1.1.14 Check the Water Treatment Hold Tanks. If the tanks contain liquid, measure the content volume in gallons.

7.1.1.15 Take a four ounce sample from the Hold Tank(s). Place the sample in a sample jar complete a "Sample Label", Form FMPC-PRO-306 (See Figure 1) and affix the label to the sample jar.

7.1.1.16 Fill out a "Report of Chemical Analyses", Form FMPC-T-200 (See Figure 2). Request U g/l. Send the sample and form to the Laboratory.

7.1.1.17 Empty and clean the Sump System Filter Press.

7.1.1.18 Remove previous inventory labels or place a current label over the old label.

7.1.1.19 If possible, produce and ship remelt metal and uranium bearing materials requiring sampling.

NOTE: The supervisor shall direct the interplant movement of nuclear materials in accordance with instructions in accordance with instructions in the "Notice of Inventory Letter" immediately before the stated inventory date.

7.2 Residue Disposition

7.2.1 Move residues produced before 8:00 a.m. on the day of the inventory to the assigned residue area for inventory.

NOTE: The supervisor shall give the Plant Specialist all production cards that represent residues produced during the current period.

NOTE: The Plant Specialist shall include the information from the production cards in that month's activity lists.

7.2.2 Weigh partially consumed containers of remelt metal. Record the weight on the side of the container.

R - MATERIAL REVISED, ADDED, OR DELETED.

7.0 PROCEDURE (cont.)

7.3 Taking Inventory

NOTE: The Plant Specialist shall issue the documentation to the inventory teams.

NOTE: An "Inventory Label" (See Figure 3) printed with the month and year shall be applied to drums and skids. If a label represents more than one item, a notation shall be made on the label of exactly what is represented (for example, "one skid - four drums"). For single items no notation is required.

NOTE: The Plant Specialist shall obtain weights from the computer data base and list the weights on the Inventory Record.

7.3.1 Record derbies from each operation on an "Inventory Record", Form FMPC-CONT-366 (See Figure 4) and a "Derby Backup Sheet", Form FMPC-CONT-3016-1 (See Figure 5).

7.3.2 Record flats on an "Inventory Record" and list flat numbers and cavities on a "Flat NM Inventory Backup Sheet", Form FMPC-CONT-3049 (See Figure 6).

7.3.3 Record residues on an "Inventory Record" sheet and a "Residue NM Inventory Backup Sheet", Form FMPC-CONT-3046 (See Figure 7).

7.3.4 Record cores on an "Inventory Record" sheet and list cores by ingot number, batch number, and pieces on a "Core NM Inventory Backup Sheet", Form FMPC-CONT-3047 (See Figure 8).

7.4 Work-in-Process Inventories

NOTE: A work-in-process inventory ("book inventory") shall be prepared at the end of interim months of a physical inventory. Manual records are compared to the computer data base and reconciled. If there are any unreconcilable items, a physical count may be taken. After material is reconciled, the Specialist shall summarize the information, record it onto an inventory record and enter the information onto the physical inventory system.

R - MATERIAL REVISED, ADDED, OR DELETED.

8.0 APPLICABLE FORMS

8.1 FMPC-PRO-306, "Sample Label"

8.2 FMPC-T-200, "Report of Chemical Analyses"

8.3 FMPC-CONT-366, "Inventory Record"

8.4 FMPC-CONT-3016-1, "Derby Backup Sheet"

8.5 FMPC-CONT-3049, "Flat NM Inventory Backup Sheet"

8.6 FMPC-CONT-3046, "Residue NM Inventory Backup Sheet"

8.7 FMPC-CONT-3047, "Core NM Inventory Backup Sheet"

R - MATERIAL REVISED, ADDED, OR DELETED.

FMPC

TYPE OF MATERIAL:			P.O. NO./ENRICHMENT
TYPE OF SAMPLE:			
LOT NUMBER OR IDENT.:			
DATE:	TIME:	NET WT.:	

FMPC-PRO-306 (REV 2/6/86)

SAMPLE LABEL
FMPC-PRO-306
Figure 1

R - MATERIAL REVISED, ADDED, OR DELETED.

FMPC

REPORT OF CHEMICAL ANALYSES

(NOTE Write Firmly — Part 4 must be legible.)

FMPC-T-200 (REV 5-8-88)

Lab. Nos. _____

Lot No. _____

Analyses Requested _____

MATERIAL	LAB. NO.	IDENTIFICATION	ANALYTICAL DATA					
ACCOUNT NO								
DATE SAMPLED								
SUBMITTED BY								
REMARKS								

NO	DISTRIBUTION OF COPIES
1	Originator
2	Extra Copy
3	Quality Assurance
4	Analytical (RECORD COPY)

Approved By _____ Date of Report _____

REPORT OF CHEMICAL ANALYSES
FMPC-T-200
Figure 2

R - MATERIAL REVISED, ADDED, OR DELETED.

AUGUST 1988

INVENTORY LABEL
Figure 3

R - MATERIAL REVISED, ADDED, OR DELETED.

FMPC
CONTROLLER'S ORGANIZATION MATERIALS CONTROL AND ACCOUNTABILITY
INVENTORY RECORD
☐ PHYSICAL ☐ WIP

DATE	INVENTORY SHEET NUMBER
PLANT	AREA	NUCLEAR MATERIAL

LINE NO	BADGE NUMBER / CHECKED BY	ITEM NO [1]	LOT NUMBER: P O NUMBER	SOURCE	CLASS	MATERIAL	SEQUENCE	MBA	ID [2] / STG LOC	QUANTITY	NET WEIGHT POUNDS
1											
2											
3											
4											
5											
6											
7											
8											
9											
10											
11											
12											
13											
14											
15											
16											
17											
18											
19											
20											
21											
22											
23											
24											

[1] INGOT NUMBER, DERBY NUMBER, DRUM NUMBER, ETC
[2] EG., DERBIES, INGOTS, BOXES, POTS, ETC

FMPC-CONT-366 (REV. 7-16-88)

INVENTORY RECORD
FMPC-CONT-366
Figure 4

R - MATERIAL REVISED, ADDED, OR DELETED.

FMPC
PRODUCTION OPERATIONS - NUCLEAR MATERIALS INVENTORY . .
DERBY BACKUP SHEET

Building: _____ Plant _____ Page ____ Of ____

Row: _____ Operation: _____

SKID NO.:		SKID NO.:		SKID NO.:	
DERBY NUMBER	WEIGHT	DERBY NUMBER	WEIGHT	DERBY NUMBER	WEIGHT

SKID NO.:		SKID NO.:		SKID NO.:	
DERBY NUMBER	WEIGHT	DERBY NUMBER	WEIGHT	DERBY NUMBER	WEIGHT

SKID NO.:		SKID NO.:		SKID NO.:	
DERBY NUMBER	WEIGHT	DERBY NUMBER	WEIGHT	DERBY NUMBER	WEIGHT

FMPC-CONT-3016-1 (8-23-88)

DERBY BACKUP SHEET
FMPC-CONT-3016-1
Figure 5

R - MATERIAL REVISED, ADDED, OR DELETED.

FMPC
CONTROLLER'S ORGANIZATION - NUCLEAR MATERIALS INVENTORY
FLAT NM INVENTORY BACKUP SHEET

Area: _____ Plant _____ Page ____ Of ____

Row: _____ Date: _____

FLAT NUMBER	CAVITY	FLAT NUMBER	CAVITY	FLAT NUMBER	CAVITY	FLAT NUMBER	CAVITY	FLAT NUMBER	CAVITY

FMPC-CONT-3049 (9/22/88)

FLAT NM INVENTORY BACKUP SHEET
FMPC-CONT-3049
Figure 6

R - MATERIAL REVISED, ADDED, OR DELETED.

FMPC

CONTROLLER'S ORGANIZATION - MATERIALS CONTROL AND ACCOUNTABILITY

RESIDUE NM INVENTORY BACKUP SHEET

☐ PHYSICAL ☐ WIP Plant _____ Page _____ of _____

Area: _____ Nuclear Material: _____ Date: _____

BADGE NUMBER / CHECKED BY	ITEM[1] NO. (4-6)	LOT NUMBER					MBA (40-42)	ID[2] / STG LOC. (52-56)	QUANTITY (66-72)	NET WEIGHT POUNDS (74-80)
		P O NUMBER (20-23)	SOURCE (24-26)	CLASS (27)	MATERIAL (29-30)	SEQUENCE (31-34)				

[1] INGOT NUMBER, DERBY NUMBER, DRUM NUMBER, ETC
[2] EG.: DERBIES, INGOTS, BOXES, POTS, ETC

FMPC-CONT-3046 (5-22-88)

RESIDUE NM INVENTORY BACKUP SHEET
FMPC-CONT-3046
Figure 7

R - MATERIAL REVISED, ADDED, OR DELETED.

FMPC
CONTROLLER'S ORGANIZATION - NUCLEAR MATERIALS INVENTORY
CORE NM INVENTORY BACKUP SHEET

Page ____ of ____

Location: _____ Date: _____

INGOT NUMBER	BATCH NUMBER	NUMBER OF PIECES	INGOT NUMBER	BATCH NUMBER	NUMBER OF PIECES

FMPC-CONT-3047 (9-22-88)

CORE NM INVENTORY BACKUP SHEET
FMPC-CONT-3047
Figure 8

R - MATERIAL REVISED, ADDED, OR DELETED.

RECORD OF ISSUE/REVISION

PAGE	DATE	DESCRIPTION/AUTHORITY
1 thru 8	03-12-68	Issued
All	06-17-75	Complete revision requested by NMC to generally update the SOP. Per "Change in Standard Operating Procedure" request #75.
4 & 5	09-27-79	Inventory tags may now represent a lot rather than a skid. Permission granted to remove inventory tags before inventory date in certain, special plant areas. All changes per Change in SOP Nos. 395 and 396 initiated by L. H. Harmon.
1 thru 16	11-02-88	Reissued to reflect current practices and reformated to meet procedure program requirements per Request No. P88-190, initiated by D. Dravland.

LIST OF EFFECTIVE PAGES

PAGE	DATE
1 thru 16	11-02-88

R - MATERIAL REVISED, ADDED, OR DELETED.

WESTINGHOUSE MATERIALS COMPANY OF OHIO - FMPC	Page 1 Page Revision Date: None	
OPERATIONS PROCEDURE	PLANT 8 NUCLEAR MATERIAL INVENTORY	SOP 8-C-504 Section: Manufacturing Plant: 8
Authorization: R.L. Gardner	Supersedes: 8-C-504, 11-03-72	Issue Date: 07-27-89

1.0 PURPOSE

The purpose of this document is to establish the procedure for taking a physical inventory of nuclear materials in Plant 8.

2.0 APPLICABILITY

This procedure is applicable to the nuclear material located in Plant 8.

3.0 RESPONSIBILITIES

3.1 Supervisors shall be responsible for the following:

3.1.1 Contacting Industrial Hygiene or Radiological Safety to determine the appropriate respiratory protection for the process being performed.

3.1.2 Providing operators with the required respiratory protection.

3.1.3 Coordinating with the Plant Nuclear Material Reporting Specialist to conduct the inventory.

3.1.4 Checking the "Notice of Inventory Letter" for instructions.

3.1.5 Directing the shutdown of Plant 8 operations.

3.1.6 Halting material transfer between Material Balance Accounts (MBA).

3.1.7 Acting as an inventory completion team member to determine that the inventory is complete.

3.1.8 Directing that operations be resumed after notification by MC&A that inventory is concluded.

3.1.9 Informing operators of the Standard Operating Procedures that apply to the process or tasks being performed.

3.1.10 Locking and tagging equipment per FMPC-719 when shutdown is required for inventory.

3.2 Operators shall be responsible for preparing Plant 8 for inventory and for taking an inventory of residues in accordance with this SOP.

3.0 RESPONSIBILITIES (cont.)

3.3 The Plant 8 NM Reporting Specialist shall be responsible for the following:

3.3.1 Coordinating with the supervisor to conduct the inventory.

3.3.2 Issuing documentation to inventory teams.

3.3.3 Receiving and verifying completed documents are returned by inventory teams.

3.3.4 Listing information for entry into the Physical Inventory System.

3.3.5 Assisting in the determination that inventory is complete.

3.3.6 Checking the quantities shown on inventory sheets, comparing the with book records and computer data base, and reconciling the differences.

3.3.7 Reviewing interplant transfer receipts and/or shipments of non-routine materials to ensure that unusual materials are included in the inventory.

3.3.8 Entering the inventory sheets into the Physical Inventory System.

3.3.9 Generating the inventory for the MC&A Accountants reports.

3.3.10 Ensuring that all used and/or unused inventory sheets have been returned.

3.4 MC&A shall be responsible for issuing a "Notice of Inventory Letter", assisting to determine that all nuclear materials have been inventoried, and notifying the Plant 8 supervisor when the inventory has been obtained and reconciled.

3.5 Industrial Hygiene and Safety shall be responsible for issuing a "Confined Space Entry Permit" when required.

4.0 DEFINITIONS

NONE

5.0 REFERENCES

5.1 SOP 8-C-701, "Plant 8 Dust Collectors"

5.2 SOP 20-C-904, "General Nuclear Safety Requirements"

5.3 FMPC-719, "Proper Tag and Lock Procedure"

R - MATERIAL REVISED, ADDED, OR DELETED.

6.0 INDUSTRIAL HEALTH AND SAFETY REQUIREMENTS

6.1 A defined safety system is not involved.

6.2 Leather or leather-palm gloves shall be worn while handling containers, nuclear material, and sharp edged or abrasive material.

6.3 Chemical resistant neoprene or nitrile gloves shall be worn while taking samples and when working around corrosive/caustic materials. Following use, gloves shall be rinsed and hung up to dry.

6.4 Chemical resistant gloves shall be leak checked prior to use. Leaking gloves or gloves contaminated on the inside with acid or caustic shall be discarded.

6.5 Respiratory protection provided by the supervisor shall be worn when required.

6.6 Safety glasses shall be worn unless additional eye protection is required.

6.7 Cover goggles shall be worn when there is a possibility of exposure to dust, grit, organic solvent, acid, caustic or any other hazardous substance.

6.8 Skids of non-pyrophoric material shall not be stacked more than three high.

6.9 Skids shall not contain more than four 55-gallon drums or five 30-gallon drums.

6.10 Spills of nuclear material shall be cleaned and drummed as soon as the spill occurs.

6.11 Full or partially full drums shall be lifted and/or moved by mechanical material handling equipment, not by hand.

6.12 Nuclear safety limits and restrictions of SOP 20-C-904 and/or the applicable manufacturing specifications for the procedure or process shall be followed at all times.

6.13 A "Confined Space Entry Permit" shall be posted before entering an c tank, sump, or other confined space.

R - MATERIAL REVISED, ADDED, OR DELETED.

6.0 INDUSTRIAL HEALTH AND SAFETY REQUIREMENTS (cont.)

6.14 Anti-contamination clothing specified by OS&H shall be worn while working in a contaminated enclosure.

6.15 Materials identified as plutonium contaminated shall be segregated from material being inventoried.

6.16 Equipment shall be locked and tagged per FMPC-719 when shutdown is required for inventory.

6.17 Any circumstance which could have resulted in an intake of radioactive materials by inhalation, ingestion or absorption shall immediately be reported to a supervisor. The supervisor shall immediately report the circumstance of possible radioactive materials intake to Radiological Safety for evaluation. The involved employees shall report to Medical Services at the end of their shift or as directed to submit a urine sample and again report at the start of their next shift to submit another urine sample.

7.0 PROCEDURE

7.1 Preparation for Inventory

NOTE: Physical inventories require that operations cease during inventory preparations; transfers of materials between MBAs shall be halted and processing equipment shall be emptied and cleaned out. All residues generated during cleanout shall be drummed, identified, weighed, and sampled if necessary.

NOTE: The supervisor shall deliver the Production Cards (65 packets) representing residues produced during the current report period, including the residues from cleanout, to the Specialist responsible for the MBAs involved for inclusion in that month's activity lists.

7.1.1 Check the drums on the pad. If necessary, arrange the drums systematically by lot number.

7.1.2 Check the drum identification.

7.1.2.1 If necessary, use white paint and stencil the product drums with lot number, drum number, and gross, tare, and net weights.

R - MATERIAL REVISED, ADDED, OR DELETED.

7.0 PROCEDURE (cont.)

7.1.3 Check for empty drums.

7.1.3.1 Remove lot markings and previous inventory stickers from the empty drums.

7.1.3.2 Move the empty drums to a storage area away from full or partially full drums.

7.1.4 Check the Eimco and Oliver Filters. Remove any nuclear material from filters.

7.1.4.1 Drain uranium bearing solution from the Eimco and Oliver Filters.

7.1.4.2 Remove filter cake from the Oliver and Eimco Filters.

7.1.5 Check the blue drums with white overpack to be shipped off-site. Ensure that the drums have pre-printed bar code labels and that the gross, tare, and net weights are written in manually.

7.1.6 Rabble out the Oxidation Furnace, Box Furnace, and Rotary Kiln. Clean the furnaces to deadbed.

7.1.7 Empty the dust collectors (Refer to SOP 8-C-701) and vacuum cleaner.

7.1.7.1 Check to ensure that there is no nuclear material at the Drumming Station.

7.1.7.2 Weigh the drums of residue and stencil the drums with lot number, gross, tare, and net weights, and drum number.

7.1.8 Assemble unlotted drums of in-process material.

7.1.8.1 Code the drums as specified by MC&A.

7.1.8.2 Sample the material in the drums.

7.1.8.3 Weigh the drums and stencil drums with gross, tare, and net weights.

7.1.9 Empty Filtrate Receiving Tank W8-11.

7.1.10 Take the tank volumes per Table 1.

R - MATERIAL REVISED, ADDED, OR DELETED.

TABLE 1
TANK VOLUME MEASUREMENTS

GAUGES	OUTAGES
Caustic Scrubber Tank	Digester D-101
Oxidation #1 Scrubber Tank	Digester D-102
Oxidation #2 Scrubber Tank	Digester D-103
Box Furnace Scrubber Tank	Digester D-104
	Digester D-105
	Filter Feed Tank F-104
	Filter Feed Tank F-203
	Filter Feed Tank F-203A
	Accountability Tank 735-43-31
	Effluent Tank 21A
	Effluent Tank 22A
	Effluent Tank 25A
	Effluent Tank 28A
	Kiln Scrubber Tank
	Floor Sump
	Silo "A" F43-3
	Silo "B" F43-3
	Calciner Scrubber Tank

7.1.11 Remove solids from Floor Sump.

7.1.12 Dissolve and agitate Uranium bearing sump material and then take a sample.

7.2 Taking Inventory

NOTE: The Plant Specialist shall issue the documentation to the inventory teams.

NOTE: An "Inventory Label" (See Figure 1) printed with the month and year shall be applied to cylinders, pallets, drums, and skids. If a label represents more than one item, a notation shall be made on the label of exactly what is represented (for example, "one skid - four drums"). For single items no notation is required.

NOTE: Plant 8 Inventory consists of residues.

R - MATERIAL REVISED, ADDED, OR DELETED.

7.0 PROCEDURE (cont.)

7.2.1 Record residues on an "Inventory Record" sheet, Form FMPC-CONT-366 (See Figure 1).

NOTE: The weights and other data for the residues are obtained from the copy of the production record or off the drum.

7.2.2 Measure for outage or read the gauges for the equipment listed in Table 1. Record the measurements of readings on the "Inventory Record" sheet.

7.2.3 Take samples as follows:

7.2.3.1 Sample scrubbers (Refer to Table 1) from their recycle lines.

7.2.3.2 Take dip samples from all other vessels listed in Table 1.

7.3 Post-Inventory Procedure

NOTE: A member of the inventory team, MC&A, and the Plant 8 Supervisor shall determine that all nuclear materials have been inventoried.

NOTE: Quantities shown will be compared with the book records and the computer data base. Any differences will be reconciled. The Specialist shall review all interplant transfers reflecting receipts and/or shipments of non-routine materials to ensure that unusual materials are inventoried.

NOTE: When MC&A is satisfied that an accurate inventory has been obtained and reconciled, MC&A shall notify Plant 8 supervision that production activities may resume.

7.4 WORK-IN-PROCESS (WIP) INVENTORIES

NOTE: A work-in-process inventory (Book Inventory) is prepared at the end of interim months of a physical inventory.

NOTE: Operations shall be shut down, except those specified as necessary by the Plant Specialist and Pilot Plant supervision.

R - MATERIAL REVISED, ADDED, OR DELETED.

7.0 PROCEDURE (cont.)

7.4.1 Remove and drum residues from dust collectors, sumps, and process equipment.

7.4.2 Weigh partial drums of residues which production has not been taken on.

7.4.3 Mark containers of residues with lot and weight.

7.4.4 Record work-in-process items on an "Inventory Record"

NOTE: The manual records are compared to the computer data base and reconciled by the Plant Specialist. If there are any reconcilable items, a physical count may have to be taken. After all material is reconciled, the Specialist shall summarize the information onto an inventory sheet and enter the information into the EDP physical inventory system.

8.0 Applicable Forms

8.1 FMPC-CONT-336, "Inventory Record"

R - MATERIAL REVISED, ADDED, OR DELETED.

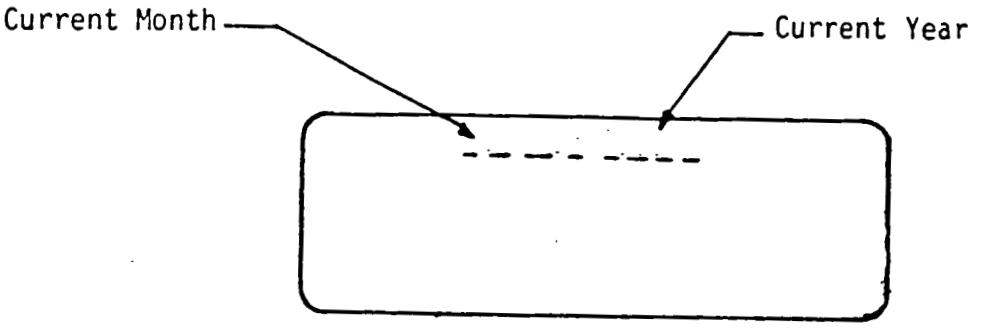

INVENTORY LABEL
Figure 1

R - MATERIAL REVISED, ADDED, OR DELETED.

FMPC
CONTROLLER'S ORGANIZATION MATERIALS CONTROL AND ACCOUNTABILITY
INVENTORY RECORD
☐ PHYSICAL ☐ WIP

DATE	INVENTORY SHEET NUMBER
PLANT	AREA	NUCLEAR MATERIAL

LINE NO	BADGE NUMBER / CHECKED BY	ITEM NO *	LOT NUMBER: P O NUMBER	SOURCE	CLASS	MATERIAL	SEQUENCE	AREA	@ / STR LOC	QUANTITY	NET WEIGHT POUNDS
1											
2											
3											
4											
5											
6											
7											
8											
9											
10											
11											
12											
13											
14											
15											
16											
17											
18											
19											
20											
21											
22											
23											
24											

* INGOT NUMBER, DERBY NUMBER, DRUM NUMBER, ETC
@ EG DERBIES, INGOTS, BOXES, POTS, ETC

FMPC-CONT-366 (REV 7-89)

INVENTORY RECORD
FMPC-CONT-366
Figure 2

R - MATERIAL REVISED, ADDED, OR DELETED.

WESTINGHOUSE MATERIALS COMPANY OF OHIO - FMPC		Page 11 Page Revision Date: None	
OPERATIONS PROCEDURE	PLANT 8 NUCLEAR MATERIAL INVENTORY		SOP 8-C-504 Section: Manufacturing Plant: 8
Authorization: R.L. Gardner		Supersedes: 8-C-504, 11-03-72	Issue Date: 07-27-89

RECORD OF ISSUE/REVISIONS

PAGE	DATE	DESCRIPTION AND AUTHORITY
1 thru 6	11-03-72	Original issue.
1 thru 11	07-27-89	Reissued to update the current Plant 8 practices and reformat to confirm with procedure program requirements per Request P89-058, initiated by P.J. Beirne.

LIST OF EFFECTIVE PAGES

PAGE	DATES
1 thru 11	07-27-89

R - MATERIAL REVISED, ADDED, OR DELETED.

1.0 PURPOSE

The purpose of this document is to establish the procedure for taking a physical inventory of nuclear materials in Plant 9.

2.0 APPLICABILITY

This procedure is applicable to nuclear material located in Plant 9.

3.0 RESPONSIBILITIES

3.1 The supervisor shall be responsible for coordinating with the Plant NM Specialist to conduct the inventory, checking the "Notice of Inventory Letter" for instructions, directing the shutdown of operations, halting material transfers between MBAs, acting as an inventory completion team member to determine that the inventory is complete, and directing the restart of operations after notification by MC&A that inventory is concluded.

3.2 Operators shall be responsible for acting as two person teams to take an inventory in accordance with this SOP.

3.3 The Plant Specialist shall be responsible for the following:

3.3.1 Coordinating with the supervisor to conduct the inventory.

3.3.2 Issuing documentation to inventory teams.

3.3.3 Receiving and verifying completed documents returned by inventory teams.

3.3.4 Listing information for entry into the Physical Inventory System.

3.3.5 Assisting in the determination that inventory is complete.

3.3.6 Summarizing quantities shown on backup sheets, comparing the quantities with book records and computer data base, and reconciling the differences.

3.3.7 Reviewing all interplant transfer record of receipts and/or shipments of non-routine materials to ensure that unusual materials are included in the inventory.

3.3.8 Entering the inventory sheets into the Physical Inventory System.

3.0 RESPONSIBILITIES (cont.)

3.3.9 Generating the inventory for the MC&A Accountants reports.

3.3.10 Ensuring that all used and/or unused inventory sheets have been returned.

3.4 MC&A shall be responsible for issuing a "Notice of Inventory Letter", assisting to determine that all nuclear materials have been inventoried, and notifying the Plant 9 supervisor when the inventory has been obtained and reconciled.

4.0 DEFINITIONS

None

5.0 REFERENCES

5.1 SOP 9-C-701, "Plant 9 Dust Collectors"

5.2 SOP 9-C-904, "Operator Scale Checking in Plant 9"

5.3 SOP 20-C-101, "Moving and Storing Nuclear Materials On-Site at the FMPC"

5.4 SOP 20-C-102, "Nuclear Safety for Receiving, Storing, Repackaging, and Moving Enriched Uranium Materials 20% ^{235}U from Off-Site"

6.0 INDUSTRIAL HEALTH AND SAFETY REQUIREMENTS

6.1 A defined safety system is not involved.

6.2 Leather or leather-palm gloves shall be worn while handling containers, nuclear material, and sharp-edged or abrasive material.

6.3 Respiratory protection specified by Industrial Hygiene and Safety or Environmental and Radiation Monitoring shall be worn depending on existing conditions.

6.4 Safety glasses shall be worn unless other eye protection is required.

6.5 Cover goggles shall be worn when there is a possibility of exposure to dust, organic solvent, acid, or caustic.

6.6 Skids of material shall be stacked in compliance with SOP 20-C-101 and SOP 20-C-102.

R - MATERIALS REVISED, ADDED, OR DELETED.

6.0 INDUSTRIAL HEALTH AND SAFETY REQUIREMENTS (cont.)

6.7 Drums shall be lifted and/or moved by mechanical material handling equipment, not by hand.

6.8 Nuclear Safety limits and restrictions of applicable manufacturing specifications for the procedure or process shall be followed at all times.

6.9 Personnel shall use portable shielding when required by OS&H.

6.10 Personnel shall remain at the distance specified by OS&H for the material being inventoried.

6.11 Personnel shall not exceed the exposure time specified by OS&H for the material being inventoried.

6.12 Any circumstance which could have resulted in an intake of radioactive materials by inhalation, ingestion or absorption shall immediately be reported to a supervisor. The supervisor shall immediately report the circumstance of possible radioactive materials intake to Radiological Safety for evaluation. The involved employees shall report to Medical Services at the end of their shift or as directed to submit a urine sample and again report at the start of their next shift to submit another urine sample.

7.0 PROCEDURE

NOTE: Physical inventories require that operations cease during inventory preparations; transfers of materials between MBAs may be halted and processing equipment shall be emptied and cleaned out. All residues generated during cleanout shall be drummed, identified, weighed, and sampled if necessary.

7.1 Preparation for Inventory

7.1.1 At the supervisors direction, perform the following:

7.1.1.1 Remove Inventory Labels from drums, skids, and pallets or place a current Inventory Label (see Figure 1) over the old label.

7.1.1.2 Clean the processing equipment.

7.1.1.3 Drain the coolant from all machine tools except for the Rapid Borer.

7.1.1.4 Remove and drum sludge from machines.

7.1.1.5 Clean saws and machines and place turnings and fines in drums.

R - MATERIALS REVISED, ADDED, OR DELETED.

7.0 PROCEDURE (cont.)

7.1.1.6 Using a vacuum, clean enclosure surfaces, conveyors, floors, and skids.

7.1.1.7 Empty dust collectors (Refer to SOP 9-C-701) and portable vacuum cleaners.

7.1.1.8 If possible, empty tanks containing uranium bearing process wastes.

7.1.1.9 If not possible to empty tanks containing uranium bearing waste, take a sample of the tank content and measure the volume of the tank content as of 8:00 a.m. on the day of inventory.

7.1.1.10 Weigh and identify all residues.

7.1.1.11 Collect, drum, and lot mark contaminated filter cartridges, rags, filter cloths, filter paper, contaminated insoluble oil, and slurry from dezircing solution filtrate.

7.1.1.12 Weigh and lot mark contaminated graphite.

7.1.1.13 Assemble and group derbies, remelt metal, top crops, ingots, samples, flats, residues, and solid scrap.

7.1.1.14 Remove crude ingots from the separation booth.

7.1.1.15 Ensure that furnaces are empty.

7.1.1.16 Move drums of residue to the storage area for inventory.

NOTE: All residues produced before 8:00 a.m. on the inventory day shall be included.

7.1.1.17 Check scales to be used for weighing remelt per SOP 9-C-904.

7.1.1.18 Weigh partial containers of remelt metal. Calculate the consumption and stencil the weight on the container.

7.1.1.19 Inspect to ensure readiness for inspection and complete the "Inventory Preparation Checklist" (Refer to Table 1).

R - MATERIALS REVISED, ADDED, OR DELETED.

7.0 PROCEDURE (cont.)

7.2 Taking Inventory

NOTE: The Plant Specialist shall issue the documentation to the inventory teams.

NOTE: An "Inventory Label" (See Figure 1) printed with the month and year shall be applied to pallets, drums, and skids. If a label represents more than one item, a notation shall be made on the label of exactly what is represented (for example, "one skid - four drums"). For single items no notation is required.

NOTE: The Plant Specialist shall obtain weights for ingots and flats from the computer data base and list the weights on the "Inventory Record".

NOTE: The weights used for derbies awaiting Salt Bath and Pickling are received weights. The weight used for derbies that have been pickled is received weight minus the average weight loss of each derby. The received weight of a skid of derbies minus the weight of the skid after pickling, divided by the number of derbies on the skid equals the average weight loss of each derby on the skid.

7.2.1 Record ingots on an "Inventory Record" sheet, Form FMPC-CONT-366 (See Figure 2). List the Item No., P. O. No., source, class, material, sequence, MBA, location, and quantity.

7.2.2 Record derbies on a "Derby Backup Sheet", Form FMPC-CONT-3016-1 (See Figure 3). List the derby numbers from each operation.

7.2.3 Record residues on an "Inventory Record" sheet.

NOTE: Obtain information to fill out the sheet from Production Records (9XX card) or from identification stencilled on sealed drums.

7.2.4 Record flats on a "Flat NM Inventory Backup Sheet", Form FMPC-CONT-3049 (See Figure 4). List flats by number and cavity.

R - MATERIALS REVISED, ADDED, OR DELETED.

7.0 PROCEDURE (cont.)

7.3 Work-in-Process Inventories

NOTE: A work-in-process inventory ("book inventory") shall be prepared at the end of interim months of a physical inventory. Manual records are compared to the computer data base and reconciled. If there are any unreconcilable items, a physical count may be taken. After material is reconciled, the Specialist shall summarize the information, and enter the data in the Physical Inventory System.

8.0 APPLICABLE FORMS

8.1 FMPC-CONT-366, "Inventory Record"

8.2 FMPC-CONT-3016-1, "Derby Backup Sheet"

8.3 FMPC-CONT-3049, "Flat NM Inventory Backup Sheet"

R - MATERIALS REVISED, ADDED, OR DELETED.

TABLE 1

INVENTORY PREPARATION CHECKLIST

Page 1 of 3

Name:_____ Badge/ID:_____ Date/Time:_____

AREA	CHECK	COMPLETED YES	COMPLETED NO	AREA	CHECK	COMPLETED YES	COMPLETED NO
Remelt	Boxes, skids, drums of remelt grouped			Remelt (cont)	Saw chips collected		
	Charge Station clean				Solid scrap (crops) collected		
	Charge station ready for inventory				Portable vacuum cleaners emptied and clean		
	Furnaces empty/ ready for inventory			Zirnlo	Decoppering Rinse Tank #1 empty or sampled/measured		
	Mold Tanks/ Separation Booth clean and ready for inventory				Zirnlo raw materials ready for inventory		
	Furnace floor area clean				Lime Slurry Tanks empty or sampled/ measured		
	Cutoff lathe clean/ready for inventory				Degreasing Tank empty or sampled/ measured		
	Skids of N-Reactor ingots in Saw area				Decoppering Tank empty or contents measured		

R - MATERIALS REVISED, ADDED, OR DELETED.

TABLE 1

INVENTORY PREPARATION CHECKLIST (cont.)

Page 2 of 3

AREA	CHECK	COMPLETED YES	COMPLETED NO	AREA	CHECK	COMPLETED YES	COMPLETED NO
Zirnlo (cont)	Pickling Rinse Tank No. 1 empty or sampled/ measured			Machining Area (cont)	J &L Turret Lathe Model 30, empty and clean		
	Pickling Rinse Tank No. 2 empty or sampled/ measured				South Gisholt Turret Lathe 4-L empty and clean		
	Zirnlo area product weighed				Machining Area floor and trenches clean and ready for inventory		
	Zirnlo floor area clean and ready for inventory				Skids of ingots grouped for inventory		
	Residues, such as saw chips or ends of copper cladding weighed				Monarch Lathe empty and clean		
Machining Area	North Gisholt Turret Lathe 4-L empty and clean				Rapid Borer empty and clean		
	Residues drummed, identified, and weighed				Sump Tank empty or sampled/ measured		

R - MATERIALS REVISED, ADDED, OR DELETED.

TABLE 1

INVENTORY PREPARATION CHECKLIST

Page 3 of 3

AREA	CHECK	COMPLETED YES	COMPLETED NO	AREA	CHECK	COMPLETED YES	COMPLETED NO
Sump Area	Residues drummed, identified, and weighed				Filtrate Hold Tank No. 2 empty or sampled/measured		
	Plate and Frame Filter No. 1 clean				Filtrate Hold Tank No. 3 empty or sampled/measured		
	Plate and Frame Filter No. 2 clean			Residues	Residues produced by 8:00 a.m. on inventory day moved to storage area for inventory		
	Precipitator Tank No. 1 empty or sampled/measured				Residue production cards assembled for current period		
	Precipitator Tank No. 2 empty or sampled/measured				Partial containers of remelt weighed and comsumption calculated		
	Decant Tank empty or sampled/ measured				Weight stencilled on the side of partial remelt containers		
	Filtrate Hold Tank No. 1 empty or sampled measured				Dust Collector G9-N1-1035 residues drummed identified, and weighed		

R - MATERIALS REVISED, ADDED, OR DELETED.

AUGUST 1988

INVENTORY LABEL

Figure 1

R - MATERIALS REVISED, ADDED, OR DELETED.

FMPC
CONTROLLER'S ORGANIZATION MATERIALS CONTROL AND ACCOUNTABILITY
INVENTORY RECORD
☐ PHYSICAL ☐ WIP

DATE	INVENTORY SHEET NUMBER
PLANT	AREA	NUCLEAR MATERIAL

LINE NO	BADGE NUMBER / CHECKED BY	ITEM NO *	LOT NUMBER: P O NUMBER	SOURCE	CLASS	MATERIAL	SEQUENCE	NMA	@ / STK LOC	QUANTITY	NET WEIGHT POUNDS
1											
2											
3											
4											
5											
6											
7											
8											
9											
10											
11											
12											
13											
14											
15											
16											
17											
18											
19											
20											
21											
22											
23											
24											

* INGOT NUMBER DERBY NUMBER DRUM NUMBER ETC
@ EG DERBIES INGOTS BOXES POTS ETC

FMPC-CONT 366 (REV 7-1-89)

INVENTORY RECORD
FMPC-CONT-366
Figure 2

R - MATERIALS REVISED, ADDED, OR DELETED.

FMPC
PRODUCTION OPERATIONS NUCLEAR MATERIALS INVENTORY
DERBY BACKUP SHEET

Building _____ Plant _____ Page ____ Of ____

Row _____ Operation _____

SKID NO.:		SKID NO.:		SKID NO.:	
DERBY NUMBER	WEIGHT	DERBY NUMBER	WEIGHT	DERBY NUMBER	WEIGHT

SKID NO.:		SKID NO.:		SKID NO.:	
DERBY NUMBER	WEIGHT	DERBY NUMBER	WEIGHT	DERBY NUMBER	WEIGHT

SKID NO.:		SKID NO.:		SKID NO.:	
DERBY NUMBER	WEIGHT	DERBY NUMBER	WEIGHT	DERBY NUMBER	WEIGHT

FMPC-CONT 3016-1 (6-21-88)

DERBY BACKUP SHEET
FMPC-CONT-3016-1
Figure 3

R - MATERIALS REVISED, ADDED, OR DELETED.

FMPC

CONTROLLER'S ORGANIZATION - NUCLEAR MATERIALS INVENTORY

FLAT NM INVENTORY BACKUP SHEET

Area _____ Plant _____ Page ____ Of ____

Row _____ Date _____

FLAT NUMBER	CAVITY	FLAT NUMBER	CAVITY	FLAT NUMBER	CAVITY	FLAT NUMBER	CAVITY	FLAT NUMBER	CAVITY

FMPC-CONT 3049 (5-22-88)

FLAT NM INVENTORY BACKUP SHEET
FMPC-CONT-3049
Figure 4

R - MATERIALS REVISED, ADDED, OR DELETED.

RECORD OF ISSUE/REVISION

PAGE	DATE	DESCRIPTION/AUTHORITY
All	08-04-65	Issued
All	02-28-75	Reissued
1 thru 14	03-08-89	Reissued to update to current requirements and reformat to conform with procedure program per Request P88-200 initiated by J. L. Stoffer.

LIST OF EFFECTIVE PAGES

PAGE	DATE
1 thru 14	03-08-89

R - MATERIALS REVISED, ADDED, OR DELETED.

1.0 PURPOSE

The purpose of this document is to establish the procedure for taking a physical inventory of nuclear materials in the Pilot Plant.

2.0 APPLICABILITY

This procedure is applicable to nuclear material located in the Pilot Plant (Bldgs. 13, 37, and 54).

3.0 RESPONSIBILITIES

3.1 The supervisor shall be responsible for the following:

3.1.1 Coordinating with the Plant NM Specialist to conduct the inventory.

3.1.2 Checking the "Notice of Inventory Letter" for instructions.

3.1.3 Directing the shutdown of Pilot Plant operations.

3.1.4 Halting material transfer between MBAs.

3.1.5 Acting as an inventory completion team member to determine that the inventory is complete.

3.1.6 Directing that operations be resumed after notification by MC&A that inventory is concluded.

3.1.7 Informing operators of the Standard Operating Procedures that apply to the process or tasks being performed.

3.2 Operators shall be responsible for preparing the Pilot Plant for inventory and for taking an inventory of 2-inch flats, flat samples, residues, green salt, UF_6 cylinders, and cold trap cylinders in accordance with this SOP.

3.3 The Plant NM Specialist shall be responsible for the following:

3.3.1 Coordinating with the supervisor to conduct the inventory.

3.3.2 Issuing documentation to inventory teams.

3.0 RESPONSIBILITIES (cont.)

3.3.3 Receiving and verifying completed documents returned by inventory teams.

3.3.4 Listing information for entry into the Physical Inventory System.

3.3.5 Assisting in the determination that inventory is complete.

3.3.6 Summarizing quantities shown on backup sheets, comparing the quantities with book records and computer data base, and reconciling the differences.

3.3.7 Reviewing all interplant transfers reflecting receipts and/or shipments of non-routine materials to ensure that unusual materials and UF_6 cylinders in transit are included in the inventory.

3.3.8 Entering the inventory sheets into the Physical Inventory System

3.3.9 Generating the inventory for the MC&A Accountants reports.

3.3.10 Ensuring that all used and/or unused inventory sheets have been returned.

3.4 MC&A shall be responsible for issuing a "Notice of Inventory Letter", assisting to determine that all nuclear materials have been inventoried, and notifying the Pilot Plant supervisor when the inventory has been obtained and reconciled.

4.0 DEFINITIONS

None.

5.0 REFERENCES

5.1 SOP 20-C-904, "General Nuclear Safety Requirements"

6.0 INDUSTRIAL HEALTH AND SAFETY REQUIREMENTS

6.1 A defined safety system is not involved.

6.2 Leather or Leather-palm gloves shall be worn while handling containers, nuclear material, and sharp edged or abrasive material.

6.3 Respiratory protection specified by Industrial Hygiene and Safety for chemical contaminants or Radiological Safety for radioactive contaminants shall be worn.

R - MATERIAL REVISED, ADDED, OR DELETED.

6.0 INDUSTRIAL HEALTH AND SAFETY REQUIREMENTS (cont.)

6.4 Safety glasses shall be worn unless other eye protection is required.

6.5 Cover goggles shall be worn when there is a possibility of exposure to dust, grit, organic solvent, acid, caustic or any other hazardous substance.

6.6 Skids of material shall not be stacked more than three high.

6.7 Spills of nuclear material shall be cleaned and drummed as soon as the spill occurs.

6.8 Full or partially full drums shall be lifted and/or moved by mechanical material handling equipment, not by hand.

6.9 Nuclear safety limits and restrictions of SOP 20-C-904 and/or the applicable manufacturing specifications for the procedure or process shall be followed at all times.

6.10 Anti-contamination clothing specified by OS&H shall be worn while working in a contaminated enclosure.

6.11 Any circumstance which could have resulted in an intake of radioactive materials by inhalation, ingestion or absorption shall immediately be reported to a supervisor. The supervisor shall immediately report the circumstance of possible radioactive materials intake to Radiological Safety for evaluation. The involved employees shall report to Medical Services at the end of their shift or as directed to submit a urine sample and again report at the start of their next shift to submit another urine sample.

7.0 PROCEDURE

7.1 Preparation for Inventory

NOTE: Physical inventories require that operations cease during inventory preparations; transfers of materials between MBAs shall be halted and processing equipment shall be emptied and cleaned out. All residues generated during cleanout shall be drummed, identified, weigh[illegible] sampled if necessary.

R - MATERIAL REVISED, ADDED, OR DELETED.

7.0 PROCEDURE (cont.)

7.1.1 At the supervisors direction, perform the following:

7.1.1.1 Empty portable vacuum cleaners and dust collectors and drum the material.

7.1.1.2 Empty drumming stations and package the UF_4.

NOTE: Do not empty seal legs.

7.1.1.3 Process UF_6 cylinders that are on stream until the cylinders are empty..

NOTE: The amount remaining in work-in-process shall be determined from available computer readings.

7.1.1.4 Remove old inventory labels from containers and skids or place current labels over the old labels.

7.2 Taking Inventory

NOTE: The Plant Specialist shall issue the documentation to the inventory teams.

NOTE: An "Inventory Label" (see figure 1) printed with the month and year shall be applied to cylinders, pallets, drums, and skids. If a label represents more than one item, a notation shall be made on the label of exactly what is represented (for example, "one skid - four drums"). For single items no notation is required.

NOTE: The Plant Specialist shall obtain weights for cold trap cylinders, flats, and green salt from the computer data base and list the weights on the "Inventory Record".

7.2.1 Record green salt on an "Inventory Record", Form FMPC-CONT-366 (see figure 2). List green salt by lot and number of cans.

7.2.2 Record flat and flat samples on a "Flat and Flat Sample NM Inventory Backup Sheet", Form FMPC-CONT-3061 (see figure 3) and on an "Inventory Record" sheet.

7.2.3 Record residues on an "Inventory Record" sheet.

NOTE: The weights and other data for the residues are obtained from the copy of the production record or off the drum.

D - MATERIAL REVISED, ADDED, OR DELETED.

7.0 PROCEDURE (cont.)

7.2.4 Record UF_6 cylinder numbers, material type, volume, and cylinder location on a "UF_6 Cylinder NM Inventory Backup Sheet", Form FMPC-CONT-3059 (see figure 4) and on an "Inventory Record" sheet.

7.2.5 Record all cold trap cylinders information required by the "Cold Trap Cylinder NM Inventory Backup Sheet", Form FMPC-CONT-3060 (See Figure 5).

7.3 Post-Inventory Procedure

7.3.1 Return equipment and slide gates to the normal operating status.

7.3.2 Check the posted target card on the Cold Trap System.

NOTE: The cylinder shall be of the same isotopic level that is currently in the system.

7.4 WORK-IN-PROCESS (WIP) INVENTORIES

NOTE: A work-in-process inventory (Book Inventory) is prepared at the end of interim months of a physical inventory.

7.4.1 Remove and drum residues from dust collectors, sumps, and process equipment.

7.4.2 Mark containers of residues with lot and weight.

7.4.3 Record work-in-process items on an "Inventory Record."

NOTE: Flats that have been outgassed and are awaiting further processing shall be included as WIP inventory.

NOTE: Operations shall be shut down, except those specified as necessary by the Plant Specialist and Pilot Plant supervision.

NOTE: The manual records are compared to the computer data base and reconciled by the Plant Specialist. If there are any unreconcilable items, a physical count may have to be taken. After all material is reconciled, the Specialist shall summarize the information onto an inventory sheet and enter the information into the EDP physical inventory system.

R - MATERIAL REVISED, ADDED, OR DELETED.

8.0 APPLICABLE FORMS

8.1 FMPC-CONT-366, "Inventory Record"

8.2 FMPC-CONT-3061, "Flat and Flat Sample NM Inventory Backup Sheet"

8.3 FMPC-CONT-3059, "UF_6 Cylinder NM Inventory Backup Sheet"

8.4 FMPC-CONT-3060, "Cold Trap Cylinder NM Inventory Backup Sheet"

R - MATERIAL REVISED, ADDED, OR DELETED.

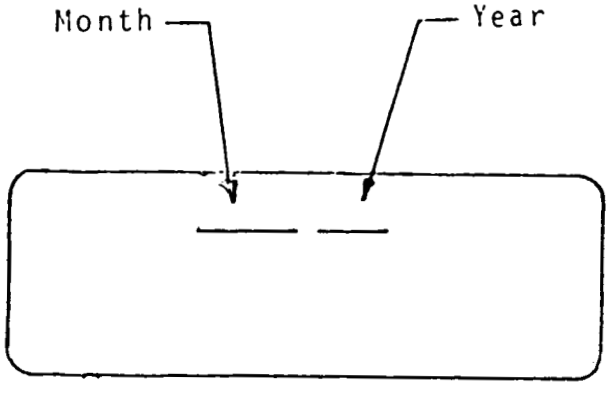

Inventory Label
Figure 1

R - MATERIAL REVISED, ADDED, OR DELETED.

FMPC
CONTROLLER'S ORGANIZATION MATERIALS CONTROL AND ACCOUNTABILITY

INVENTORY RECORD

☐ PHYSICAL ☐ WIP

DATE	INVENTORY SHEET NUMBER
PLANT	AREA / NUCLEAR MATERIAL

LINE NO	BADGE NUMBER / CHECKED BY	ITEM[1] NO	LOT NUMBER: P O NUMBER	SOURCE	CLASS	MATERIAL	SEQUENCE	MSA	ID[2] / STG LOC	QUANTITY	NET WEIGHT POUNDS
1											
2											
3											
4											
5											
6											
7											
8											
9											
10											
11											
12											
13											
14											
15											
16											
17											
18											
19											
20											
21											
22											
23											
24											

[1] INGOT NUMBER CERBY NUMBER DRUM NUMBER, ETC
[2] EG DERBIES INGOTS BOXES POTS ETC

FMPC CONT 366 (REV 7 1 88)

Inventory Record
FMPC-CONT-366
Figure 2

R - MATERIAL REVISED, ADDED, OR DELETED.

FMPC
CONTROLLERS - MC&A
PILOT PLANT FLAT AND FLAT SAMPLE NM INVENTORY BACKUP SHEET

Page No. _____

Checked By _____ Badge No. _____ Date _____

FLAT CONDITION				FLAT IDENTIFICATION		
OutGassing (Inside Furnace)	Cooling (Inside Crucible)	Waiting to be OutGassed	OutGassed and Ready to Ship	Weight	Size	ID

SAMPLES

In Box _____ On Desk _____ In Crucible _____

FMPC-CONT-3061 (12/86)

Flat and Sample NM Inventory Backup Sheet
FMPC-CONT-3061
Figure 3

R - MATERIAL REVISED, ADDED, OR DELETED.

FMPC
CONTROLLERS - MC&A

PILOT PLANT UF6 CYLINDER NM INVENTORY BACKUP SHEET

Page _____

Checked By _____ Badge No. _____ Date _____

CYLINDER NO.	MATERIAL STATUS			VOLUME STATUS		LOCATION		REMARKS
	ENRICHED	NORMAL	DEPLETED	EMPTY	FULL	PILOT PLANT	PLANT 7	

FMPC-CONT-3059 (12-02-88)

UF_6 Cylinder NM Inventory Backup Sheet
FMPC-CONT-3059
Figure 4

R - MATERIAL REVISED, ADDED, OR DELETED.

FMPC
CONTROLLER - MC&A
PILOT PLANT COLD TRAP CYLINDER NM INVENTORY BACKUP SHEET

Page _____

Checked By: _____ Badge No.: _____ Date _____

CYLINDER NO.	MATERIAL STATUS			WEIGHT	VOLUME STATUS		LOCATION		REMARKS
	ENR.	NORM	DEPL.		EMPTY	FULL	PILOT PLANT	PLANT 7	

FMPC-CONT 3060 (12-22-88)

Cold Trap Cylinder NM Inventory Backup Sheet
FMPC-CONT-3060
Figure 5

R - MATERIAL REVISED, ADDED, OR DELETED.

RECORD OF REVISIONS

PAGE	DATE	DESCRIPTION AND AUTHORITY
I thru 6	12-27-83	Request for revision of SOP to include inventory of the UF_6-UF_4 operation per Change Request No. 870, initiated by D. L. Dunaway.
I thru 12	06-13-86	Reissue of procedure per SOP Change Request No. 86-1317, initiated by D. L. Rathgens.
3	06-13-86	Addition of Procedure Item 1.12 per SOP Change Request No. P86-056, initiated by G. K. Johnson.
2, 5 5A	01-08-87	Steps 6.6 thru 6.8 added and note added to step 1.2 per draft submitted by G. Johnson which includes Request P86-293.
I thru 12	04-14-89	Reissued to update the procedure to current requirements per Request P88-265, initiated by K. R. Nuhfer.

LIST OF EFFECTIVE PAGES

PAGE	DATE
1 thru 12	04-14-89

R - MATERIAL REVISED, ADDED, OR DELETED.

NON-CONTROLLED COPY

WESTINGHOUSE MATERIALS COMPANY OF OHIO - FMPC	Page 1 Page Revision Date:	2344
PRODUCTION OPERATIONS DEPARTMENT PROCEDURE	Title: ISOTOPIC CHANGEOVER, CLEANUP, AND INSPECTION OF THE UF_6-UF_4 FACILITY	SOP 11-C-212 Section: Chemical Plants Plant: Pilot Plant
Authorization: W. H. Britton	Supersedes: 11-C-212 12-30-83	Issue Date: 01-30-87

REFERENCES: SOP 11-C-230
SOP 11-C-238
SOP 11-C-244
SOP 11-C-245
SOP 11-C-247
SOP 11-C-901
MS 11-BD/E-420-23

DEFINED SAFETY SYSTEMS INVOLVED _X_ YES ____ NO

DESCRIPTION OF OPERATION AND EQUIPMENT

When changing operations from one isotopic level to another, the equipment and surrounding areas are cleaned to control crossover and to prevent downgrading higher value materials.

For isotopic changeover, the UF_6-UF_4 Reduction Facility is completely shut down, material is removed and placed in properly identified containers, and all required areas of the autoclave and reactor are cleaned. After cleanup, an inspection is made by Production, and an audit inspection is completed by the Quality Assurance Department. Required inspection reports are completed and forwarded to the Materials Control and Accountability Department.

ENVIRONMENTAL CONSIDERATIONS

It is the intention of Westinghouse Materials Company of Ohio to achieve and maintain those levels of air and water quality which will protect health and promote welfare and safety. The responsibility for limiting the uncontrolled or unintended release of pollutants rests with all personnel.

INDUSTRIAL HEALTH AND SAFETY REQUIREMENTS

1. Respirators equipped with purple radionuclide cartridges must be readily available to all operating personal assigned to the UF_6-UF_4 process area. They are to be used for dusty jobs and not to be used for protection against HF or UF_6. Full face air-purified respirators equipped with combination HF and radionuclide canisters shall be used for the protection against HF concentrations not exceeding 6 parts per million or low UF_6 concentrations.

2. Leather-palm gloves will be worn when handling sharp/abrasive materials or equipment.

3. Operators must wear safety glasses at all times except when other eye protection, such as safety goggles, is specified.

R - MATERIAL REVISED, ADDED, OR DELETED.

INDUSTRIAL HEALTH AND SAFETY REQUIREMENTS (cont.)

4. Contacting or inhaling UF_6 will be avoided. In the presence of moisture, UF_6 forms a white cloud containing HF and UO_2F_2, a toxic airborne particulate. All parts of the body accidentally exposed to UF_6 should be immediately washed with water, and the individual should report to the Medical Department for treatment.

5. All operators must complete training and remain current (annually) in the use of self-contained breathing apparatus and acid suits.

6. All operators assigned to the Pilot Plant UF_6-UF_4 Process Facility must complete the required training. This includes, but is not limited to, all phases of operations of the UF_6-UF_4 reduction process.

7. Inspect and operate the 20 ton autoclave crane and the cold trap hoist per SOP 11-C-901.

8. All personnel involved in the operation of the 20 ton autoclave crane are required to wear hard hats.

9. Hooded airline or half mask airline respirator with goggles will be worn when working in enclosures or opening up any closed process equipment which could have HF, UF_6, or be a highly dusty condition.

10. Any circumstance which could have resulted in an intake of radioactive materials by inhalation, ingestion, or absorption will be immediately reported to a supervisor. The supervisor is to immediately report the incident to the Environmental and Radiological Monitoring (ERM) Technician and file a Minor Event Report before the end of the shift during which the circumstance happened.

PROCEDURE

NOTE: Exercise extreme care when the system is changed from enriched to depleted material. Remove all material in the system, clean the equipment, and inspect the area.

1. Cylinder Handling

NOTE: Refer to 11-C-244 for cylinder moving procedures.

1.1 Complete cylinder scale check per SOP 11-C-230. Install valve cover.

1.2 Using the crane, remove cylinders from autoclaves and place on scale one at a time. Remove valve cover.

R - MATERIAL REVISED, ADDED, OR DELETED.

1. Cylinder Handling (cont.)

1.3 Weigh each cylinder and record cylinder number and weight on CYLINDER WEIGHT card. Install valve cover on valve.

1.4 Move empty cylinders to outside storage area.

1.5 Remove 5A cylinder from cold trap, weigh and record cylinder number and weight on CYLINDER WEIGHT card.

NOTE: Install valve cover when transporting. Remove valve cover to weigh.

2. Purging UF_6 Lines

2.1 Using SOP 11-C-244 and SOP 11-C-245 purge all three Autoclave lines through the UF_6 surge tank to one or both reaction vessels. This purge will be made with nitrogen.

NOTE: Follow the purging instructions as per SOP 11-C-244.

3. Cleanup and Inspection for Changeover for Any Enrichment Material

3.1 Run the 9", 3" and 2" screws and seal leg all to dead bed (empty).

3.2 Remove inspection plates from all transfer screws. Remove any hold-up from transfer screw tubes.

3.3 Remove inspection port on screws and check for material build-up. Clean if necessary.

3.4 Vibrate if necessary and remove all slag from reactor.

3.5 Remove and replace (clean) sintered metal filters.

NOTE: If going from depleted to a higher isotopic, inspection for damaged filters only is needed.

3.6 Remove inspection plate from Packaging Station hopper. Vacuum clean.

3.7 Empty all material from Packaging Station enclosure and vacuum clean.

R - MATERIAL REVISED, ADDED, OR DELETE

3. Cleanup and Inspection for Changeover for Any Enrichment (cont.)

3.8 Remove cyclones and check for material build-up and vacuum if needed.

CAUTION: CYCLONES ARE NOT DESIGNED TO WITHSTAND HAMMERING ON THE EXTERIOR.

3.9 Blow down dust collector bags and remove material from bins.

NOTE: Follow SOP 11-C-238 to remove materials.

3.10 Empty UF_6-UF_4 area vacuum system knock-out drum. Vacuum area clean.

4. Have the Quality Assurance Department confirm that the dust collector bin level probes are set at 13 inches, if changing to enriched material.

NOTE: Record this audit on Form FMPC-ADM-2243.

5. Vacuum clean all areas where cleanup and inspection is performed.

6. Drum up all materials removed from the system. Properly lot mark and record on "65" cards.

7. It is the responsibility of the Production Supervisor to determine that the changeover is complete. Request that Quality Assurance audit the changeover and verify that the changeover is complete. Forward a copy of the Quality Assurance Audit Report, Certification of Isotopic and/or Alloy Changeover Cleanup and Inspection, Form FMPC-ADM-2243, to the Materials Control and Accountability Department.

R - MATERIAL REVISED, ADDED, OR DELETED.

WESTINGHOUSE MATERIALS COMPANY OF OHIO - FMPC	Page 5 Page Revision Date:	
PRODUCTION OPERATIONS DEPARTMENT PROCEDURE	Title: ISOTOPIC CHANGEOVER, CLEANUP, AND INSPECTION OF THE UF_6-UF_4 FACILITY	SOP 11-C-212 Section: Chemical Plant Plant: Pilot Plant
Authorization: W. H. Britton	Supersedes: 11-C-212 12-30-83	Issue Date: 01-30-87

RECORD OF REVISIONS

PAGE	DATE	DESCRIPTION AND AUTHORITY
1 thru 6	12-30-83	Request for revision of SOP provide for isotopic changeover of the UF_6-UF_4 Reduction Facility per Change Request No. 871, initiated by D. L. Dunaway. (SOP 11-C-212 was previously placed on inactive status per letter from D. A. Tippenhauer, dated 5-26-82.)
4, 6	08-15-84	Step added for reset of dust collector level probes Change Request No. 971, initiated by L. C. Dolan.
1	06-04-86	Environmental Considerations revised per current standard statement.
3	06-04-86	Industrial Health and Safety Requirements, Item 11 revised per current standard statement.
4 thru 5	06-04-86	Procedure Item 3 revised to cover changeover from enriched to normal material per SOP Change Request No. 1204, initiated by D. D. Gilbert.
1 thru 5	01-30-87	Reissued to update procedure to current operating condition per Request No. P86-294, initiated by G. K. Johnson.

LIST OF EFFECTIVE PAGES

PAGE	DATE
1 thru 5	01-30-87

R - MATERIAL REVISED, ADDED, OR DELETED.

OPERATIONS PROCEDURE	BAGHOUSE TYPE DUST COLLECTOR FILTER REMOVAL/REPLACEMENT	SOP 20-C-709 AREA: All
Authorization: Per CIO C89-042 R. L. Gardner, Manufacturing	Supersedes: None	Issue Date: 02-16-90

1.0 PURPOSE

The purpose of this document is to provide the procedure for removing and replacing baghouse type dust collector filters.

2.0 APPLICABILITY

This procedure is applicable to the baghouse type dust collectors at the FMPC.

3.0 RESPONSIBILITIES

3.1 Production Supervisors shall be responsible for the following:

3.1.1 Ensuring that only trained personnel clean the dust collectors.

3.1.2 Ensuring that all required safety equipment is present at the jobsite.

3.1.3 Assisting Maintenance and the Radiation Safety Technician (RST) in designating a roped off contamination control zone (CCZ).

3.1.4 Ensuring that drums to contain removed filters, respirator, and protective clothing are present and that the drums have plastic liners.

3.1.5 Contacting an RST for a "Radiation Work Permit" (RWP).

3.1.6 Contacting an Industrial Hygiene Technician to obtain a "Confined Space Entry Permit", if required.

3.1.7 Inspecting the cleaned dust collector, if applicable.

3.1.8 Issuing a "Work Permit" if a permit is required.

3.1.9 Coordinating work activities with the Maintenance Supervisor.

3.1.10 Shutting off power to equipment, locking the power off, and tagging equipment (Refer to FMPC-719).

3.1.11 Contacting Q&S to determine the appropriate hazard warnings for NFPA Labels and for informing operators of the hazard warning.

3.2 Operators shall be responsible for complying with this procedure, requirements of posted permits, and the safety instructions of the RST.

3.3 Radiological Safety shall be responsible for issuing the "RWP" and for testing sealed drums for contamination.

R - MATERIAL REVISED, ADDED, OR DELETED.

OPERATIONS PROCEDURE	BAGHOUSE TYPE DUST COLLECTOR FILTER REMOVAL/REPLACEMENT	SOP 20-C-709 AREA: All
Authorization: Per CIO C89-042 R. L. Gardner, Manufacturing	Supersedes: None	Issue Date: 02-16-90

3.0 RESPONSIBILITIES (cont.)

3.4 Industrial Hygiene shall be responsible for issuing a "Confined Space Entry Permit" when a permit is required.

3.5 Maintenance shall be responsible for removing filter bags and for assisting in designating the CCZ.

4.0 DEFINITIONS

4.1 RWP - Radiation Work Permit

4.2 Contamination Control Zone (CCZ) - A roped-off space (Zone 3) around the dust collector to prevent contamination by controlling access to the work area.

4.3 Double Pack Drums - 48 gallon jughead drums for packing inside 55 gallon drums.

5.0 REFERENCES

5.1 SOP 20-C-602, "Inspection and Operation of Nilfisk Portable Vacuum Units"

5.2 SOP 20-C-701, "Operation of Hoffman Portable Dust Collectors"

5.3 SOP 20-C-904, "General Nuclear Safety Requirements"

5.4 FMPC-719, "Tag and Lock Procedure"

6.0 INDUSTRIAL HEALTH AND SAFETY REQUIREMENTS

6.1 A defined safety system is not involved, except for the Pilot Plant collectors.

6.2 Nuclear Safety Requirements of SOP 20-C-904 and the applicable Operations Manufacturing Specification shall apply for material removed from dust collectors.

6.3 A roped-off Contamination Control Zone (Zone 3) shall be established prior to starting work requiring entry into the dust collectors.

6.4 Eye protection, protective clothing, and respiratory equipment specified by the RWP shall be put on prior to entering the CCZ and removed prior to leaving the zone.

6.5 A "Radiation Work Permit", "Work Permit", and if necessary, a "Confined Spaced Entry Permit" shall be posted outside the dust collector.

6.0 INDUSTRIAL HEALTH AND SAFETY REQUIREMENTS (cont.)

6.6 Leather-palm gloves with cotton inner gloves shall be worn while handling drums and sharp edged or abrasive material, while cleaning the dust collector, and when working with dust collector equipment.

6.7 Plastic lined drums for clothing/equipment shall be located inside the CCZ. There shall be a drum for each type of protective clothing or equipment required.

6.8 Safety equipment, drums, and vacuum cleaners shall be inside the CCZ.

6.9 Safety helmets shall be worn by personnel working around and inside the dust collectors.

6.10 Wrist and finger dosimeters shall be worn while inside the Pilot Plant and Plant 5 dust collector CCZ.

6.11 Before entering the filter housing, dust collector power shall be shut off, locked, and tagged "OUT-OF-SERVICE" per the "Tag and Lock Procedure" (Refer to FMPC-719).

6.12 Filters shall be contained in plastic bags prior to removal from the baghouse.

6.13 Spills of dust collector residue shall be removed with a HEPA filtered vacuum as soon as the spill occurs. Residues spills or loose material shall not be allowed outside of the dust collector.

6.14 The In-Place Test Label on HEPA filtered vacuums shall be intact and current (tested within one year).

6.15 Protective clothing shall be vacuumed and anti-contamination clothing removed prior to removal of respiratory equipment.

6.16 Dust collector interior lights shall be on when entering the dust collector, while work is being performed inside the collector, and when exiting the collector.

6.17 Personnel and equipment shall be frisked prior to leaving the contamination control zone.

6.18 All containers of residues shall be identified with an NFPA Label.

R - MATERIAL REVISED, ADDED, OR DELETED.

6.0 INDUSTRIAL HEALTH AND SAFETY REQUIREMENTS (cont.)

6.19 Any circumstance which could have resulted in an intake of radioactive materials by inhalation, ingestion or absorption shall immediately be reported to a supervisor. The supervisor shall immediately report the circumstance of possible radioactive materials intake to Radiological Safety for evaluation. The involved employees shall report to Medical Services at the end of their shift or as directed to submit a urine sample and again report at the start of their next shift to submit another urine sample.

7.0 PROCEDURE

7.1 Preparing for CCZ Establishment

CAUTION: DO NOT START OR OPERATE DUST COLLECTORS THAT ARE CLASSIFIED AS EXCESS, ABANDONED-IN-PLACE, OR STANDBY.

7.1.1 If the dust collector has an overhead contaminated air plenum and no access doors, proceed as follows:

7.1.1.1 Start the dust collector per the applicable SOP.

7.1.1.2 Start the Hi-Vac that is associated with the collector.

7.1.1.3 Using a rubber mallet, gently tap the plenum walls to dislodge particles.

NOTE: Repeatedly strike the plenum for two to three minutes.

7.1.2 If the dust collector has an overhead contaminated air plenum and an access door, proceed as follows:

7.1.2.1 Check that the required permits are posted.

NOTE: The Supervisor shall obtain and post a "Radiation Work Permit".

7.1.2.2 Open the plenum access doors.

7.1.2.3 Without entering the plenum, push residues into bag openings.

NOTE: If necessary, a Hi-Vac or a HEPA equipped vacuum can be used to remove residues.

7.1.2.4 When the plenum is clean, close the access doors.

7.1.2.5 Start the dust collector and associated Hi-Vac per the applicable SOP.

7.0 PROCEDURE (cont.)

7.1.3 If the dust collector is equipped with a shaker type filter cleaning system, proceed as follows:

7.1.3.1 Start and operate the shaker mechanism for five minutes.

CAUTION: DO NOT OPERATE THE CLEANING MECHANISM WHILE THE DUST COLLECTOR IS OFF.

NOTE: Do not operate pulse jets or blowring blowers.

7.1.4 Remove residues from dust collection hoppers per the applicable dust collector SOP.

7.1.5 Shut off the dust collector.

7.1.6 Notify the supervisor that the dust collector is ready for filter removal and replacement.

NOTE: The supervisor shall shut off power to the dust collector, associated Hi-Vac, and filter cleaning systems, lock the power off, and tag the power sources "Danger - Do Not Operate" per the "Tag and Lock Procedure", FMPC-719.

7.2 Contamination Control Zone Establishment

7.2.1 Obtain the following items and place the items near the dust collector.

7.2.1.1 Plastic lined double pack drums to contain contaminated waste. Check to ensure the drums are empty.

NOTE: The supervisor shall specify drum sizes, the number of drums required, and hazard warnings.

7.2.1.2 Affix an NFPA Label (See Figure 1) with appropriate hazard warnings to the inner and outer drums.

7.2.1.3 HEPA filtered portable vacuum approved for radionuclides.

NOTE: A hose, with a knockout drum, may be connected to an operating Hi-Vac and used instead of the vacuum.

7.2.1.4 Cart or table for storage of safety equipment and supplies, such as respirators, anti-contamination clothing, tape, and drum liners.

7.2.1.5 Plastic lined drums to hold contaminated safety equipment and clothing.

7.0 PROCEDURE (cont.)

7.2.2 Run, position, and tag airline respirator hoses.

NOTE: Position the air hoses according to job function served, manpower required, and necessary freedom of movement.

7.2.3 Notify the supervisor that the area is ready for CCZ establishment.

NOTE: The Production Supervisor, Maintenance Supervisor, and RST shall coordinate to establish the CCZ.

7.2.4 After the CCZ area has been identified, ensure that the necessary equipment (Refer to Step 7.2.1) is inside the area.

NOTE: When the CCZ is completed, the supervisor shall post the required permits at the CCZ entry/exit point.

7.3 Cleaning the Collector for Filter Removal

7.3.1 Check to ensure that an "RWP", "Work Permit", and "Confined Space Entry Permit" are posted at the CCZ entrance.

7.3.2 Put on the safety equipment specified by the permits and enter the CCZ.

CAUTION: ENTER THE CCZ ONLY AT THE DESIGNATED ENTRY POINT.

7.3.3 Open the access door and enter the baghouse.

7.3.4 Cover the Main Exhaust opening with a sheet of plastic.

7.3.5 Using the portable vacuum or the Hi-Vac hose, clean the floors, walls, top and bottom of the blowrings, and/or exhaust duct.

7.3.5.1 If necessary, wipe down the areas with a cloth.

7.3.6 Exit the baghouse and notify the supervisor that the collector is ready for filter removal.

7.4 Removing/Replacing Filters

7.4.1 For blowring collectors, proceed as follows:

7.0 PROCEDURE (cont.)

7.4.1.1 Open a large plastic bag and hold the bag under the filter that is being removed by Maintenance.

WARNING: DO NOT STAND UNDER BLOWRINGS.

CAUTION: DO NOT REMOVE UNBAGGED FILTERS FROM THE COLLECTOR.

NOTE: If a double-pack drum is not available, leave the bag in the baghouse until a double-pack drum is obtained.

7.4.2 For collectors other than blowrings proceed as follows:

7.4.2.1 Lift and place each of the filters in a plastic bag.

CAUTION: IF THE COLLECTOR DOES NOT HAVE ACCESS, AVOID SPILLING RESIDUE WHILE REMOVING THE FILTER FROM THE COLLECTOR.

NOTE: If double-pack drums are not available, plastic bags containing filters may be stored outside the unit if entrance to the unit is not possible.

NOTE: Maintenance shall remove the filters from the connections and place the filters on the baghouse floor or in the collection hopper.

7.4.3 When the plastic bag is full, gently press on the bag to remove trapped air, twist the end of the bag, and tape the bag shut.

NOTE: One bag can contain two to five large filters.

7.4.4 Remove the bagged filters from the collector, if applicable, and place the bag in a double-pack drum.

7.4.5 If residues are spilled outside of the baghouse, use vacuum and clean up the material as soon as possible.

7.4.6 When the double-pack drum is full, lid the drum and secure the lid with a lock ring.

7.5 Post-Maintenance Cleaning

7.5.1 If there is any spilled residues, use the portable vacuum unit to clean up the material.

7.0 PROCEDURE (cont.)

7.5.2 When cleaning blowring type collectors, check to ensure that the blowring drive chains are tied off or wired in position to prevent movement.

CAUTION: UNWIRED DRIVE CHAINS COULD MOVE WHEN STEPPED ON.

7.5.3 For blowring type collectors, use an oily rag to wipe down the inside of the overhead contaminated air plenum.

7.5.4 On the uncontaminated side of the filter bags, use an oily rag to wipe the top half of the baghouse walls, the top of the blowrings (if applicable), connectors, thimbles, and cleaning mechanisms.

NOTE: Always start to clean at the top of the baghouse.

7.5.5 Clean the bottom half of the blowrings (if applicable), the lower half of the walls, outside of thimbles, and baghouse floor.

7.5.6 Remove the plastic sheets from the exhauster openings.

7.5.7 Inform the supervisor that the dust collector is ready for filter bag installation.

NOTE: The supervisor shall notify Maintenance that the collector is ready for new filter bags.

7.6 Exiting the Contamination Control Zone

7.6.1 Using the HEPA filtered vacuum, clean hands and anti-c clothing.

7.6.2 Remove leather-palm gloves and place the gloves in the appropriate drum.

NOTE: Do not remove plastic and cloth gloves.

7.6.3 Remove tape and anti-c clothing. Place the anti-c clothing in the appropriate drum.

NOTE: Remove the hood, then booties, and finally, coveralls.

7.6.4 Remove the respirator and place the respirator in the appropriate drum.

7.6.5 Remove plastic and cloth gloves and place the gloves in the appropriate drum.

7.6.6 Proceed to the entry/exit point and frisk hands, clothing, and head.

7.0 PROCEDURE (cont.)

7.6.7 If no contamination is found, exit the CCZ.

7.6.7.1 If contamination is found, contact the supervisor. Do not exit without permission. Proceed as directed by the supervisor/RST.

NOTE: The supervisor shall notify the RST of the situation.

7.7 Removing Work Materials/Drums from the CCZ

NOTE: An RST shall be present before removing tools/drums.

7.7.1 Put on the protective clothing for entering the CCZ.

7.7.2 Move tools and drums to the CCZ entry/exit point.

7.7.3 Frisk the tools and place uncontaminated tools outside of the CCZ.

7.7.3.1 If the tool is contaminated, clean the tool and repeat the frisk.

7.7.4 At the supervisors direction, remove drums certified as uncontaminated by the RST.

NOTE: The RST shall smear test all drums, empty or full, and ensure that the drums are uncontaminated and sealed.

NOTE: The supervisor shall designate the exit point for drums. The exit point may be different than the personnel exit point.

7.7.4.1 If smear test reveals contamination, clean the drum and request the RST to repeat the smear test.

7.7.5 When all drums and tools have been removed, proceed per Item 7.6.

8.0 APPLICABLE FORMS

None

OPERATIONS PROCEDURE	BAGHOUSE TYPE DUST COLLECTOR FILTER REMOVAL/REPLACEMENT	SOP 20-C-709 AREA: All
Authorization: Per CIO C89-042 R. L. Gardner, Manufacturing	Supersedes: None	Issue Date: 02-16-90

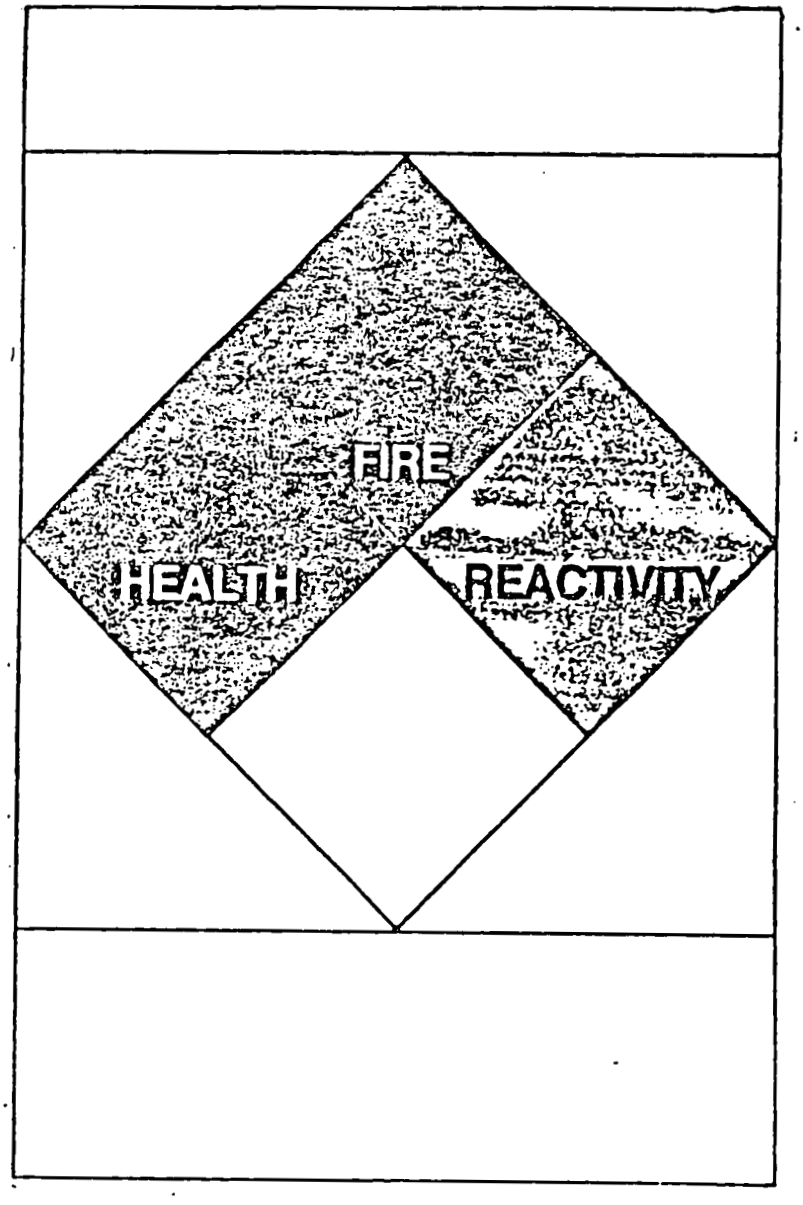

NFPA LABEL
Figure 1

R - MATERIAL REVISED, ADDED, OR DELETED.

OPERATIONS PROCEDURE	BAGHOUSE TYPE DUST COLLECTOR FILTER REMOVAL/REPLACEMENT	SOP 20-C-709 AREA: All
Authorization: Per CIO C89-042 R. L. Gardner, Manufacturing	Supersedes: None	Issue Date: 02-16-90

RECORD OF ISSUE/REVISIONS

DATE	REV.NO.	DESCRIPTION AND AUTHORITY
02-16-90	0	Procedure for changing baghouse type dust collector filters required per CIO C89-042 (P90-144).

R - MATERIAL REVISED, ADDED, OR DELETED.

STEP 8

NON-CONTROLLED COPY

2344

TASK SPECIFIC

HEALTH AND SAFETY PLAN

FOR DECONTAMINATION OF VARIOUS AREAS OF

EXISTING, FIXED OR REMOVABLE CONTAMINATION

JUNE 5, 1991

FEED MATERIALS PRODUCTION CENTER

WESTINGHOUSE MATERIALS COMPANY OF OHIO
P.O. BOX 398704
CINCINNATI, OHIO 45239-8704

PREPARED FOR THE
U.S. DEPARTMENT OF ENERGY
OAK RIDGE OPERATIONS OFFICE
UNDER CONTRACT DE-AC05-880R21734

APPROVED BY: D E Ashmen DATE: 6/11/91
J. J. VOLPE

APPROVED BY: S J Dechter DATE: 6/12/91
S. J. DECHTER

TABLE OF CONTENTS

		PAGE
Section 1	HISTORY & DESCRIPTION OF BUILDING, EQUIPMENT, AND AREA	1
	1.1 Historical Overview of the Site	1
	1.2 Principal Process Units	1
	1.3 Production Area Support Facilities	1
	1.4 Areas to be Decontaminated	1
Section 2	WORK AREA DESCRIPTION, ORGANIZATION AND SITE ACCESS CONTROL	4
	2.1 Work Area Description	4
	2.2 Responsibilities	4
	2.3 Site Access	4
Section 3	JOB ACTIVITIES/WORK PLAN	6
	3.1 Process Area	6
	3.2 Nonprocess Area	6
	3.3 Additional Control Measures	7
Section 4	HAZARDOUS ASSESSMENTS	9
	4.1 Radioactivity	9
	4.2 Chemicals	10
	4.3 General Safety Hazards	11
	4.4 Energized Equipment	12
	4.5 Overhead and Underground Utilities	12
	4.6 Heat Stress	12
	4.7 Cold Stress	13
	4.8 Confined Spaces	14
	4.9 Safety Meetings	14

	4.10 Contingency Plans	15
	4.11 Monitoring	15
Section 5	STANDARD OPERATING PROCEDURES	17
	5.1 Decontamination Activities	17
	5.2 Relevant Standard Operating Procedures	17
Section 6	EDUCATION AND TRAINING	18
	6.1 Training	18
	6.2 Safety Meetings	18
Section 7	MEDICAL MONITORING AND SURVEILLANCE	19
	7.1 Worker Selection	19
	7.2 Medical Monitoring Program	19
	7.3 Submittal of Names	19
Section 8	MONITORING	20
	8.1 Goals	20
	8.2 Monitoring Equipment and Frequency of Monitoring	20
	8.3 Action Limits	23
Section 9	PERSONAL PROTECTIVE EQUIPMENT	24
Section 10	SAFETY EQUIPMENT LIST	25
Section 11	DECONTAMINATION PROCEDURES	26
Section 12	EMERGENCY PLANS	27
	12.1 Injuries	27
	12.2 Chemical/Radiological Releases	28
	12.3 Chemical Splashes	29

12.4 Site Evacuation 29

12.5 Communication 30

12.6 Fire Emergency 30

12.7 Medical Emergency 30

12.8 Hospitals 30

12.9 Maps 30

12.10 Emergency Telephone Numbers 31

Section 13 AMENDMENTS 32

FIGURE 1 PROCESS AREA CHART SHOWING TOTAL AREA AND CONTAMINATED AREA - 1991

FIGURE 2 NONPROCESS (SHEET 1 OF 6) - LABORATORY RADIOLOGICAL SURVEY RESULTS

NONPROCESS (SHEET 2 OF 6) - SIDEWALK RADIOLOGICAL SURVEY RESULTS

NONPROCESS (SHEET 3 OF 6) - NORTH SIDE CAFETERIA RADIOLOGICAL SURVEY RESULTS

NONPROCESS (SHEET 4 OF 6) - SECURITY SHACKS/TURNSTILES RADIOLOGICAL SURVEY RESULTS

NONPROCESS (SHEET 5 OF 6) - ADMINISTRATIVE BLDG. RADIOLOGICAL SURVEY RESULTS

NONPROCESS (SHEET 6 OF 6) - HUMAN RESOURCES UTILITY ROOM, VARIOUS OUTSIDE LOCATIONS, & LAUNDRY ROOF RADIOLOGICAL SURVEY RESULTS

FIGURE 3 FMPC RALLY POINTS

FIGURE 4 ROUTES TO FMPC MEDICAL FACILITY

TABLES SURVEY RESULT TABLES

LOCATION	PAGE
Administration Building	T 1
Cafeteria	T 2
Human Resources Utility Room	T 3

Laboratory	T 4
Laundry Roof	T 9
Security Turnstiles	T10
Service Building	T13
Various Outside Locations	T14

APPENDIX A WORK PLAN FOR DECONTAMINATION OF VARIOUS AREAS OF EXISTING, FIXED OR REMOVABLE CONTAMINATION HEALTH AND SAFETY PLAN

APPENDIX B DEFINITIONS

1.0 HISTORY AND DESCRIPTION OF BUILDING, EQUIPMENT, AND AREA

1.1 Historical Overview of the Site

The Feed Materials Production Center (FMPC) is located in Southwestern Ohio, approximately 20 miles northwest of downtown Cincinnati near the communities of Miamitown and Ross, Ohio. Of the total site area of 1,050 acres, 850 acres are in Crosby Township of Hamilton County and 200 acres are in Ross and Morgan Townships of Butler County, Ohio. The FMPC is owned by the United States Department of Energy (DOE) and operated by the Westinghouse Materials Company of Ohio (WMCO).

The FMPC was built in 1950 and full operation began in 1953. The purpose of the facility was to establish an integrated production complex for processing uranium and its compounds from natural uranium ore concentrates for use in governmental defense programs. A wide variety of chemical and metallurgical process steps were utilized to support the production of uranium metal products. The initial mission of the facility was to produce uranium metal from a variety of feed materials. The focus is now placed on waste management and environmental restoration. A detailed description is found in the FMPC Site Health and Safety Plan.

1.2 Principal Process Units

The FMPC is comprised of several plants, each of which has performed a function related to uranium processing. In all of the plants, a variety of chemicals and chemical products have been used throughout the years. A detailed description is found in the FMPC Site Health and Safety Plan.

1.3 Production Area Support Facilities

In addition to the plants, there are numerous other storage, treatment, and general support facilities located within the Production Area. A detailed description is found in the FMPC Site Health and Safety Plan.

1.4 Areas to be Decontaminated

Semi-Annual, Routine, Special Request, and Characterization radiological surveys performed by WMCO's Industrial, Radiological Safety & Training (IRS&T) Radiological Safety organization have identified locations in both process and nonprocess areas where radiological activity levels are higher than both DOE and WMCO Administrative Guides.

The radiological contaminant sources are uranium-238 and its immediate short-lived daughters deposited as a result of the production activities performed at the FMPC.

1.4.1 Process Area - Radioactive contamination exists within numerous process area buildings and plants. This contamination consists of radiologically contaminated particles which are emitting alpha, beta and gamma activity. These particles adhere to surfaces within the plants and in outdoor areas. The material composition of the surfaces are variable but include: concrete, gravel, metal, painted surfaces and inplant floors, side walls and ceiling structures.

Radiological surveys conducted by direct frisk have shown alpha activity levels which range from 200-35,000 dpm/100 cm^2. Beta contamination ranges from 1,000 - 500,000 dpm/100 cm^2. Radiological contamination has been identified in the following locations:

Pilot Plant	Plant 5
Plant 1	Plant 6
Plant 2/3	Plant 8
Plant 4	Plant 9

1.4.2 Nonprocess Area - Contamination has been identified at several locations on the nonprocess side at the FMPC. The contamination is fixed. The contamination has become fixed by a variety of methods which include:

1. Painting of radiologically contaminated surfaces in the past.

2. Radioactive particles adhering to semi-solid adhesive surfaces such as window caulking, asphalt, roof tars and tar existing in concrete side walk expansion joints.

3. Wax application over floor tiles which have radiological particulates entrapped between tile cracks.

4. Radiological particulates entrapped in duct work and floor drains.

Radiological surveys conducted have shown beta levels in the nonprocess areas which range from 5,000 - 140,000 dpm/100 cm^2. These levels will need to be reduced to < 5,000 dpm/100 cm^2 in order to remain an "Uncontrolled Area" per DOE Order 5480.11.

Areas shown by radiological survey to be contaminated include:

- Administration Building
- North Side Cafeteria
- Human Resources Building
- Laboratory
- Security Shacks and Turnstiles

- Service Building
- Building Roofs
- Various Outside Locations (gravel, outside of buildings)
- Walk Ways

2.0 WORK AREA DESCRIPTION, ORGANIZATION AND SITE ACCESS CONTROL

2.1 Work Area Description

Process Area - Process area decontamination activities proposed at this time are limited to removal by manual procedures. This removal will be performed inside process buildings thus minimizing environmental release of contamination.

Nonprocess Area - The decontamination proposed will occur mainly within buildings such as offices, utility rooms, and storage areas. In addition to the indoor work, the decontamination proposed is to include: sidewalk expansion joints and the areas at the security turnstiles. No disturbance of soils will be performed as part of this project. Contaminated soils will be remediated under the Comprehensive Environmental Response, Compensation and Liability Act (CERCLA) Program.

Proper air, solid and liquid engineered controls utilized during decontamination activities will be employed to keep occupational and environmental exposure to a minimum. These controls are discussed in the following section of this document.

2.2 Responsibilities

2.2.1 Manager Responsibility

All managers involved are responsible for assuring that personnel performing cleanup or decontamination activities are fully informed in regard to associated hazardous substances and are trained to the extent necessary to comply with all written requirements.

2.2.2 Personnel Responsibility

Personnel involved in this Project/Task shall:

- Know and understand the applicable Health and Safety Plan requirements.
- Comply with all safety requirements necessary to protect themselves, other workers, and the environment.
- Seek guidance from their immediate supervisor or manager in the event there is any question or uncertainty about the safety of the job.

2.3 Site Access

Work areas may cover both the nonprocess and process areas. Regulated areas in which FMPC personnel may require access will be controlled via a Radiation Work Permit to further reduce the

potential spread of chemical or radiological contamination.

Areas shall be posted and roped off in accordance with the provisions in DOE Order 5480.11 for Controlled Areas and Radiological Areas. Whole body monitoring out of the radiological area will be required.

3.0 JOB ACTIVITIES/WORK PLAN

This decontamination will be accomplished by an existing Industrial Cleaning Crew and other FMPC employees. The decontamination will be accomplished in accordance with established and proposed site policies and procedures. Areas shall be posted in accordance with the provisions in DOE Order 5480.11 for Controlled Areas and Radiological Areas.

3.1 Process Area - Figure 1 shows the total area (in square feet) of each location and the total area known to be contaminated. The nature of the radiological contamination occurrence suggests that most of the contamination is removable. These areas will be decontaminated to less than 1,000 dpm/100 cm^2 removable alpha and less than 5,000 dpm/100 cm^2 removable beta per Attachment 2 of DOE Order 5480.11 .

Proposed decontamination techniques for all process areas are to consist of cleaning of particulates initially with HEPA vacuum cleaners and other dry cleaning/removal methods. Following these methods, cleaning with liquid soap solutions will be used if necessary.

Following each area cleaning, a follow-up radiological survey with radiological swipes and "direct frisk" by portable instruments will be performed to determine the adequacy of decontamination.

Waste materials will be dispositioned in accordance with FMPC site procedures.

3.2 Nonprocess Area - Radiological surveys conducted have shown beta levels in the nonprocess areas which range from 5,000 - 140,000 dpm/100 cm^2. These levels will need to be reduced to < 5,000 dpm/100 cm^2 in order to remain an "Uncontrolled Area" per DOE Order 5480.11. See Figure 2 and Survey Results Tables for nonprocess side data summary.

Nonprocess area decontamination activities, in general, will consist of a three stage manual cleaning process; primary, secondary and tertiary. Each successive stage shall be increasingly more abrasive. The stages progress from primary being the least harsh and abrasive to tertiary being the most harsh and abrasive. Most of the contamination is removable with HEPA vacuum cleaners, other dry cleaning/removal methods or cleaning with liquid soap solutions. Nonprocess area decontamination activities proposed may involve the removal of some materials. However, the decontamination stages are designed to be no more destructive than for example: scraping painted surfaces, scrubbing stained surfaces, or routing fill material from cracks or other locations where contaminated materials have accumulated over the life of the facility. Individually, each project will generate small amounts of waste consisting of paint, wax, etc., particles and rinse water.

Decontamination of the nonprocess areas will be highly dependent upon the nature of how the fixed contamination is entrapped. Relatively nonporous surfaces such as concrete, metal, painted surfaces and tile could be decontaminated by a combination of surface cleaning or physical removal of all or part of the exposed contaminated surfaces. Examples would include removal of tiles and cleaning of the underlying surface if necessary. In many cases, dry and liquid cleaning, as proposed for the contaminated process areas, should be adequate for the nonprocess areas.

Following each area decontamination, a follow-up radiological survey will be performed to determine the adequacy of decontamination.

If post decontamination radiological survey results continue to display contaminant levels greater than WMCO and DOE Administrative Guides, then clearly further decontamination will be necessary. Further decontamination may involve some demolition or replacement of contaminated material. This activity is beyond the scope of the decontamination proposed under this Project/Task Specific Health and Safety Plan. Thus, if the three stage manual cleaning does not result in effective decontamination, further decontamination will not be performed under this Health and Safety Plan. Further decontamination will be addressed under a separate action for those areas not able to be decontaminated.

The contaminated wastes to be generated by the decontamination activities will consist of particulates, refuse and liquids. Wastes will be dispositioned consistent with FMPC site policies and procedures.

Refer to Appendix A, "Work Plan for the Decontamination of Various Areas of Existing, fixed or Removable contamination", for more details of decontamination work and techniques.

3.3 Additional Control Measures - In order to minimize the potential for releases during decontamination, additional control measures will be instituted for both process and nonprocess areas as follows:

1. Particulate engineered safeguards will be used where necessary to control particles suspended in the atmosphere at and adjacent to work areas such as portable High Efficient Particulate Air (HEPA) Filters, containments, etc.

2. The disposition of contaminated waste materials generated shall be in accordance with site policies and procedures and per the specific requirements noted within this document and consistent with site posting procedures.

3. All contaminated waste materials generated shall be placed into metal waste containers. The materials shall be segregated by categories as defined in site policy FMPC-720 as it is placed in the metal waste containers to facilitate

proper dispositioning.

4. Dispositioning/handling of contaminated waste materials shall be performed during non-peak personnel traffic times, and/or by using an appropriate personnel detour route away from the work area. When possible, work will be done on 2nd or 3rd shift to effectively eliminate nearby population risk.

5. Good housekeeping rules, all applicable policies and procedures, and appropriate Health and Safety measures will be maintained at the work area and adjacent areas. The work will also be in compliance with applicable local, state and federal regulations and with ARARs as identified for Operable Unit #3.

4.0 HAZARDOUS ASSESSMENTS

All work at the FMPC shall be analyzed for safety and health hazards prior to the initiation of the work activity. The requirements and methods of the analysis of safety and health hazards are contained in the WMCO Site Policies and Procedures (FMPC-2054), in the FMPC Site Health and Safety Plan, the Project/Task Specific Health and Safety Plan, the Project/Task Work Plans with project specific hazard assessments, and in associated manuals.

All newly identified hazards will be discussed to determine the degree of hazard and to determine if any changes to this Health and Safety Plan are needed. One or more types of hazard analysis may be required depending on the scope of work and the potential hazards involved.

Prior to proceeding with any project, all personnel performing any work on the task shall review all applicable sections of the above documents with the understanding that all known or potential health and safety hazards have been identified, documented, and communicated to them. They shall also review all associated Material Safety Data Sheets (MSDSs).

Radiological Safety shall review the work site(s) for safety and health hazards and inform the project personnel of their findings before actual work is performed at the work site(s). In addition, Industrial Hygiene and Industrial Safety may review sites when requested.

The following is a general description of hazards which may be encountered by personnel performing work on the FMPC. These general descriptions supplement the project specific hazard assessment.

4.1 Radioactivity

Until 1989, the FMPC was a uranium processing facility which had operated since the early 1950's. Uranium and uranium bearing materials have been processed and are stored in almost all parts of the Production Area, Waste Management Area, and the Laboratory. Thorium materials were also processed and are being stored at the FMPC. The principle radioactive materials present are uranium and thorium and their daughter products, although other radionuclides have been identified. Only U-238 and daughters are of concern in this Project/Task Specific Health and Safety Plan.

The main radiation hazard is the alpha radiation from internal exposure (inhalation, ingestion, injection). Contamination of surfaces or equipment with radioactive materials may be encountered in the production area. Control zones with special requirements have been established to control these hazards. Injection or other internal deposition of radioactivity is unlikely although possible during an injury, or through open cuts or sores.

The uranium, thorium and daughter products present do have some external radiation from beta and gamma, however, it is of a relatively low hazard potential and is typically only of concern for direct exposure to quantities of product material. The K-65 Storage Tanks in the Waste Management area contain significant quantities of material contaminated with radium-226. External radiation from this material and its daughter products (including radon) must be considered and appropriate precautions taken when working in this vicinity.

The third hazard connected with radioactivity is criticality. Because of the low level of U-235 at the FMPC, this is a remote possibility; however, strict engineering and administrative controls (to include drum color coding and storage requirements) are in effect to further reduce this potential.

4.2 Chemicals

The chemicals used in the FMPC facilities in recent years have been identified as part of the site hazard communication program in compliance with 29 CFR 1910.120. There are chemicals currently stored in bulk quantities. In addition, chemicals, process residues and wastes may be present in, on, and around tanks, lines, equipment and sumps. Commercially purchased chemicals or uranium are found in many facilities at the FMPC. The hazards of these materials are described on MSDSs, located in binders in the plant areas containing the specific materials.

Additionally, various other hazardous substances are or were present at the FMPC and fall into the following categories:

(a) historically used chemicals (i.e., chemicals purchased for site use prior to initiation of the current hazard communication record keeping system (about 1984))
(b) uranium bearing process residues
(c) thorium
(d) waste products

These categories are described to identify materials which, while not normally encountered except in properly identified drums, tanks or other similar methods of containment, may be present and encountered during demolition, decontamination, decommissioning, remedial investigation or clean-up activities.

- Historically Used Chemicals

  All plants and facilities have used small quantities of chemical products for general maintenance and housekeeping activities and a variety of other tasks.

All plants and buildings constructed prior to 1972 used asbestos-containing materials for insulation, transite for construction, asbestos-containing floor covering and other miscellaneous asbestos-containing materials. The condition of this transite and insulation material varies and all such material must be considered to contain asbestos and treated with specially approved work precautions.

Most plants used some capacitors containing polychlorinated biphenyls (PCBs), and instruments containing small quantities of mercury.

- Uranium Bearing Process Residues

  Uranium bearing process residues (recoverable) from FMPC operations and uranium bearing residues and scrap from other DOE facilities exist site wide.

- Thorium

  Drummed thorium materials are color coded and marked per procedure FMPC-2178, "Lot Marking and Color Coding System."

- Wastes

  Process waste, other wastes and contaminated waste materials from FMPC operations and operations at other DOE facilities exist site wide.

Contact Industrial Hygiene if additional information is needed for precautions to be taken to prevent chemical exposures problems.

4.3 General Safety Hazards

Various general safety hazards exist at the FMPC which require attention. In certain areas, the possibility of eye injury from flying objects, dust, particulates, or splashes necessitates the use of appropriate eye protection. The stability of structures, supports and work surfaces must be assessed prior to work, along with consideration for the presence of holes, water (drowning), slippery surfaces, uneven terrain, or broken pavement.

Other hazards which may exist include: pinch points, tripping hazards, falling objects, hot surfaces, sharp objects, and other common industrial safety hazards.

Contact Industrial Safety if additional information is needed for precautions to be taken to prevent general safety hazard problems.

4.4 Energized Equipment

Electrical hazards from overhead or buried power lines, improperly grounded equipment, live wires, or electrical capacitors pose a hazard of shock or electrocution. In addition, mechanical equipment which stores potential energy (such as hydraulic equipment, springs, fly wheels, etc.) poses a hazard. This equipment must be safely locked or stored.

Electrical shock hazards - Ground Fault Circuit Interrupters (GFCI's) shall be used for all outdoor, wet, damp, or construction areas.

4.5 Overhead and Underground Utilities

Utilities at the FMPC are primarily routed underground and are then piped throughout the facilities as needed. Electricity, natural gas, storm and sanitary sewers, and telephone lines are present and can pose sanitation hazards, explosions/fires, or electrocution if damaged. The piping for chemicals, process liquids, liquid wastes, and steam is primarily located on overhead pipe racks outdoors and throughout the interior of facilities. Damage to this piping can result in chemical burns or irritation, or thermal burns from steam.

4.6 Heat Stress

Threshold Limit Values (TLVs) refer to heat stress conditions under which it is believed that nearly all personnel may be repeatedly exposed without adverse health effects. TLVs are based on the assumption that most acclimatized, fully clothed workers with adequate water and salt intake should be able to function effectively under given working conditions without exceeding a deep body temperature of 38 degrees Centigrade.

Acclimatization can occur after just a few days of exposure to a hot environment. National Institute for Occupational Safety and Health (NIOSH) recommends a progressive 6-day acclimatization period for unacclimatized workers before allowing them to do full work on a hot job. Under this regimen, the first day of work on the site is begun using only 50% of the anticipated workload and exposure time, and 10% is added each additional day through day 6. The acclimatization period may be shorted to 2 or 3 days for fit/trained personnel.

Because measurement of deep body temperature is impractical for monitoring the site personnels' heat load, the measurement of environmental factors is required which most nearly correlate with deep body temperature and other physiological responses to heat. A Wet Bulb Globe Temperature Index (WBGT) is the simplest and most suitable technique to measure the environmental factors.

Permissible Heat Exposure Threshold Limit Values
(Work Load Values are given in Centigrade WBGT)

Work-Rest Regimen	Work Load Values (°C/°F) Light	Moderate	Heavy
Continuous Work	30.0/86	26.7/80	25.0/77
75% Work - 25% Rest, each hour	30.6/87	28.0/82	25.9/78
50% Work - 50% Rest, each hour	31.4/89	29.4/85	27.9/82
25% Work - 75% Rest, each hour	32.2/90	31.1/88	30.0/86

The above table is designed for use with workers wearing normal hot weather clothing (e.g. light pants and shirt). For further information, particularly regarding heat stress while wearing chemical or radiological protective clothing, refer to the Threshold Limit Values for Chemical Substances and Physical Agents and Biological Exposure Indices booklet published by the American Conference of Governmental Industrial Hygienists (ACGIH).

If the temperature reaches 85° F., contact Industrial Hygiene to determine if any precautions need to be taken to prevent any heat stress problems.

4.7 Cold Stress

As with heat stress, exposure to cold temperatures is a distinct possibility during onsite operations. Persons working outdoors in temperature at or below freezing may be frostbitten. Extreme cold for a short time may cause severe injury to the surface of the body or result in profound generalized cooling, causing death. Areas of the body that have a high surface-area-to-volume ratio, such as fingers, toes, and ears are most susceptible.

Two factors influence the development of a cold injury: ambient temperature and the velocity of the wind. Wind chill is used to describe the chilling effect of moving air in combination with low temperature. For instance, 10°F with a wind of 15 mph is equivalent in chilling effect to still air at -18°.

Local injury resulting from cold is included in the generic term frostbite. Frostbite of the extremities can be categorized into several degrees. These are as follows:

- Frost nip or incipient frostbite. The condition is characterized by sudden blanching or whitening of the skin.
- Superficial frostbite. Skin has a waxy or white appearance and is firm to the touch, but tissue beneath is resilient.

- Deep frostbite. Tissues are cold, pale, and solid; extremely serious injury.

The ACGIH has developed TLVs for cold stress (hypothermia) and cold injury. Threshold Limit Values (TLVs) are intended to protect workers from the severest effects of cold stress (hypothermia) and cold injury and to describe exposures to cold working conditions under which it is believed that nearly all workers can be repeatedly exposed without adverse health effects. The TLV objective is to prevent the deep body core temperature from falling below 36°C and to prevent cold injury to body extremities. Deep body temperature is the core temperature of the body as determined by rectal temperature measurements. For a single, occasional exposure to a cold environment a drop in core temperature to no lower than 35°C should be permitted. In addition to provisions for total body protection, the TLV objective is to protect all parts of the body from cold injury with emphasis on hands, feet and head.

Persons working outdoors in temperature at or below freezing should contact Industrial Hygiene to determine if any precautions need to be taken to prevent any cold stress problems.

4.8 Confined Spaces

Confined spaces such as tanks, pits, enclosures, manholes, etc., are present at the FMPC. In addition to the other general safety hazards mentioned, these spaces may pose additional risk because of the potential for containment of hazardous agents and the inherent difficulty in exiting. An oxygen deficiency is a particularly dangerous potential hazard associated with confined spaces. As such, special precautions and permits are required. A confined space work permit shall be issued by IRS&T before any work shall be initiated within a confined space. All requirements of the permit shall be strictly enforced.

Specific training may be required by the IRS&T Section for any workers performing confined space work. This training may be specific for the workers, the confined space being worked in, or the task to be performed.

4.9 Safety Meetings

All personnel performing project related functions are required to attend safety meetings. Safety meetings shall be held: prior to project start; weekly during work periods; and when there is a change in work activities or implementation of safety plan amendments. The meetings will cover the applicable subjects as outlined in Section 6.2.

4.10 Emergency Plans

The following emergencies and their responses are addressed in Section 12 of the Project/Task Specific Health and Safety Plan.

- Minor Injuries
- Serious Injuries
- Injuries Complicated by Contamination
- Fire, Explosion, or Medical Emergency
- Chemical/Radiological Releases
- Chemical Splashes to the Eyes and Skin
- Additional Information: Emergency Telephone Numbers

4.11 Monitoring

It is the policy of the FMPC to maintain exposures to radiation, toxic substances, and combustible gases As Low As Reasonably Achievable (ALARA).

Air Monitoring shall be performed to ensure that contaminant concentrations in the breathing zone do not exceed the concentrations as specified by established exposure levels. The action levels are listed in Section 8.3.

Personnel shall be monitored, when appropriate, in compliance with the radiation protection standards and to estimate the dose equivalents received from external and internal sources of radiation.

Monitoring Equipment and Frequency of Monitoring

- Internal Radiation Hazard

  Internal dose evaluation programs (including the routine bioassay program) shall be adequate to demonstrate compliance with radiation protection standards.

  - Minimum Bioassay Program - personnel working in radiological areas at the FMPC are required to receive whole-body counts prior to performing any radiation work, annually, and upon termination.

  - Routine Analysis Program - personnel who will work 8 hours or longer per week in radiological areas at the FMPC are required to submit monthly urine samples.

- Incident Analysis Program - personnel involved in incidents which could have resulted in an intake of radioactive materials by inhalation, ingestion, or absorption shall report to the urine sampling station at the end of their shift or as directed to complete an Incident Investigation Form and submit a urine sample and again report at the start of their next shift to submit another urine sample. The dosimetry subsection will analyze the results and may require additional bioassay monitoring as necessary.

- External Radiation Hazard

  Personnel dosimetry programs shall be adequate to demonstrate compliance with the radiation protection standards and will be processed by Dosimetry Subsection personnel. Personnel dosimeters shall be routinely calibrated and maintained.

  - TLD Monitoring - personnel working in radiological areas at the FMPC are required to obtain and wear a personal TLD.

  - Additional and/or special dosimetry requirements may be established by Radiological Safety and must be complied with.

  - If a TLD is lost or damaged, report to Radiological Safety/Dosimetry before entering a radiological area. An investigation will be performed and a replacement TLD will be issued.

- Organic Vapors and Combustible Gases

  A HNu will be used periodically to test for organic vapors and measure breathing zone contaminants. If organic vapors are detected, they will be treated as unknowns.

  Combustible Gas Indicator (CGI) meters shall be used to measure combustible gases and the lower and upper explosive limits to determine if entry should be made for sampling purposes.

  Oxygen detectors shall also be used in situations where pertinent factors are unknown.

Action Limits

The Breathing Zone action limits are listed in Section 8.3.

5.0 STANDARD OPERATING PROCEDURES

5.1 Decontamination activities shall be consistent with:

- FMPC 2084, "Radiation Control Manual"

5.2 Relevant Standard Operating Procedures (SOPs) for decontamination:

- SP-P-35-016, "Completion of a Radiation Work Permit Form"
- SP-P-35-017, "Procedure for Personnel Decontamination"
- SP-P-35-028, "Inspection and Performance Testing of Portable Radiation Survey Instruments"
- SP-P-35-026, "Occupational Air Sampling"

6.0 EDUCATION AND TRAINING

Employees assigned to perform any task on the FMPC shall not engage in any activities until they have been trained to a level commensurate with the job function, responsibilities, and with the degree of anticipated hazards.

6.1 Training

All WMCO and WMCO subcontractor personnel assigned to decontamination tasks will, as a minimum, meet the following training requirements:

- Project specified hazards review
- Project specific review of MSDS
- WMCO radiation safety training
- WMCO respiratory training and fit test
- 40-hour OSHA training
- 8-hour annual OSHA refresher training
- 8-hour OSHA supervisory training (for supervisors)
- 24-hour OSHA supervised field experience

6.2 Safety Meetings

All personnel performing project related functions are required to attend safety meetings. Safety meetings shall be held: prior to project start; weekly during work periods; and when there is a change in work activities or implementation of safety plan amendments. Safety meetings shall be documented on Form FMPC-ES&H-470; "Minutes of Safety Meeting" and will become a permanent element of this Project/Task Specific Health and Safety plan. Subjects covered shall include:

- work operations
- personal protective equipment
- air monitoring data
- hazard communication
- hearing conservation
- monitoring results
- decontamination procedures
- project organization
- physical stress
- emergency procedures
- communications
- general safety
- housekeeping

7.0 MEDICAL MONITORING AND SURVEILLANCE

7.1 Worker Selection

Worker selection is based upon an evaluation by a qualified licensed physician having knowledge of the specific task requirements and the potential exposure as it relates to the worker.

7.2 Medical Monitoring Program

In accordance with 29 CFR 1910.120, all WMCO and WMCO subcontractor personnel assigned to an FMPC project and performing actual tasks are required to participate in a medical monitoring program which includes:

- A baseline medical examination
- Annual medical examination
- Medical examinations which may be required after potential exposures
- Exit medical examination

7.3 Submittal of Names

Prior to the initiation of actual work, the names of all personnel who may be involved in the completion of the project shall be supplied to the WMCO Director of Medical Services.

8.0 MONITORING

8.1 Goals

It is the policy of the FMPC to maintain exposures to radiation, toxic substances, and combustible gases As Low As Reasonably Achievable (ALARA).

Air Monitoring shall be performed to ensure that contaminant concentrations in the breathing zone do not exceed the concentrations as specified by established exposure levels. The action levels are listed in Section 8.3.

Personnel shall be monitored, when appropriate, in compliance with the radiation protection standards and to estimate the dose equivalents received from external and internal sources of radiation.

8.2 Monitoring Equipment and Frequency of Monitoring

Internal Radiation Hazard

Internal dose evaluation programs (including the routine bioassay program) shall be adequate to demonstrate compliance with radiation protection standards.

- Minimum Bioassay Program - personnel working in radiological areas at the FMPC are required to receive whole-body counts prior to performing any radiation work, annually, and upon termination.

- Routine Analysis Program - personnel who will work 8 hours or longer per week in radiological areas at the FMPC are required to submit monthly urine samples.

- Incident Analysis Program - personnel involved in incidents which could have resulted in an intake of radioactive materials by inhalation, ingestion, or absorption shall report to the urine sampling station at the end of their shift or as directed to complete an Incident Investigation Form and submit a urine sample and again report at the start of their next shift to submit another urine sample. The dosimetry subsection will analyze the results and may require additional bioassay monitoring as necessary.

External Radiation Hazard

Personnel dosimetry programs shall be adequate to demonstrate compliance with the radiation protection standards and will be processed by Dosimetry Subsection personnel. Personnel dosimeters shall be routinely calibrated and maintained.

- TLD Monitoring - personnel working in radiological areas at

the FMPC are required to obtain and wear a personal TLD.

- Additional and/or special dosimetry requirements may be established by Radiological Safety and must be complied with.

- If a TLD is lost or damaged, report to Radiological Safety/Dosimetry before entering a radiological area. An investigation will be performed and a replacement TLD will be issued.

External radiation hazards are identified by WMCO personnel as they perform the survey required for a radiation work permit. A health physics technician will monitor exposures using a calibrated ion chamber. Measures such as increasing shielding, increasing distance or reducing exposure time will be taken to minimize exposures.

Radiation surveys will be conducted prior to decontamination to determine stay times on radiation work permits.

Contamination Monitoring

Contamination surveys will be performed before and after decontamination operations. The data will be used to properly decontaminate the area and to identify protective equipment requirements. Portable beta/gamma and alpha survey instruments will be used for monitoring total activity. Smears will be taken to quantify removable contamination when required.

Calibration

All portable radiation monitoring instruments are calibrated and maintained in accordance with SP-P-35-008, "Inspection and Performance Testing of Portable Radiation Survey Instruments"

Air Sampling and Monitoring

Areas which are not Airborne Radioactivity Areas prior to decontamination, but where contamination levels suggest that significant airborne radioactivity may occur, should be sampled with fixed location air samplers or portable air samplers. For decontamination methods which may generate dust, any decontamination covering an area greater than one square meter, will require air sampling.

Where an area is posted as Airborne Radioactivity Area due to airborne contamination, the air shall be sampled as frequently as possible using the methods in SOP-P-35-026, "Occupational Air Sampling." Alpha spectroscopy Continuous Air Monitors (CAMs) will be used as they become available. A lapel sampler shall be used on a representative of a group of decontaminators for each operation.

Based on air sampling results or expected results, respiratory protection will be selected to obtain <10% DAC inside the respirator.

Organic Vapors and Combustible Gases

A calibrated Hnu will be used to test for organic vapors and measure breathing zone contaminants when these contaminants are suspected.

8.3 Action Levels

Measurement	Level	Action
Contamination	>10,000 DPM/100 cm^2 loose contamination	Note 1
External radiation	>5 Mr/hr	HP review
Airborne radioactivity (long lived) U-238	25% DAC 5.0 E-12 uCi/mL	Note 2 & 3
Hnu Meter	Detection to 10 ppm (Note 4)	Note 2
	10-25 ppm	Supplied Air Respirator (SAR)
	>25 ppm	Withdraw
Asbestos		Note 5
CGI	25% of the LEL or greater (Note 6)	Withdraw
Oxygen Meter	<20.5% or >21.5% oxygen, Hydrogen Sulfide> 3 PPM, or Carbon Monoxide > 10 PPM	Withdraw
	Oxygen < 20.1% or > 21.9%	Withdraw

Notes

1. Anti-contamination coveralls, hoods, hand and foot covers required. Respiratory equipment also needed, depending on adequacy of controls (see section 9).

2. A minimum of a Full-face air purifying respirators with HEPA filter required.

3. Derived Air Concentrations (DAC) for radionuclide of interest.

4. 1 ppm above background.

5. If asbestos insulation is disturbed, Level C protection is required.

6. >25% LEL, explosion hazard
   NOTE: Combustible gas readings are not valid in atmospheres with <19.5 % oxygen

9.0 PERSONAL PROTECTIVE EQUIPMENT

Established levels of protection for Personal Protective Equipment (PPE) are designated as Level A, B, C and D. Level A is the highest level of protection and Level D is the lowest. Protective clothing shall be tailored to the specific task being performed in order to provide the maximum protection against suspected or known hazards. When FMPC personnel are in areas containing known hazards (uranium, thorium, asbestos, etc), appropriate PPE shall be worn to provide maximum protection. Level requirements are determined by IRS&T. Comments and requirements are incorporated into the Radiation Work Permit (RWP) and the Penetration/Excavation Permit.

Radiological Safety Technicians (RSTs) will consult with Radiological Engineering as needed to provide protective equipment requirements as follows:

- Minimum requirements for decontamination: Company -issued clothing and gloves. If contamination is on floors, shoe covers will also be minimum requirements.

- If wet decontamination methods are to be used, additional liquid, resistant clothing will be added. Splash resistant face shields may also be used.

- >10,000 dpm/100 cm^2 loose: Protective clothing in addition to the above requirements will be added. As appropriate, anticontamination coveralls and hoods, as well as additional hand and foot protection shall be used.

- Respiratory protection shall be used for dry decontamination methods at >10,000 dpm/100 cm^2 loose unless containment is adequate to prevent resuspension of contaminants into the breathing zone. Full-face air-purifying respirators shall be the minimum requirement, providing facial contamination protection as well as respiratory protection.

10.0 SAFETY EQUIPMENT LIST

- Personal Protection Equipment as specified under Section 9.0.
- Personnel monitoring devices (e.g., TLD's)
- Barricade marking tape.
- Safety signs.
- Spill cleanup equipment.
- Items as specified by the IRS&T.

11.0 DECONTAMINATION PROCEDURES

Personnel contamination will be reported to Radiological Safety, who will assist in personnel decontamination. Soap and water will be used per established site procedure. This procedure allows for chemical decontamination with the Medical Services Section Concurrence, but has very rarely been required. Uranyl nitrate is the only substance which has required chemical decontamination of personnel on-site.

Any equipment found to be contaminated will be contained and transported to the Site Decontamination Facility. This facility uses both water and abrasive and chemical decontamination as appropriate and in accordance with its operating procedures which are beyond the scope of this plan.

12.0 EMERGENCY PLANS

12.1 Injuries

According to the FMPC Site Health and Safety Plan, in the event of injuries, site personnel will try to reduce or eliminate the consequences whenever possible. The process of determining what is appropriate requires that each situation be evaluated on a case-by-case basis. All personnel are not to enter an unknown atmosphere in a confined space without proper respiratory equipment, even to rescue a person who has collapsed.

Co-workers do not attempt rescue, but they should be familiar with IH&S-IH-05 Section 5.4, "Rescue Requirements for Confined Spaces".

All injuries shall be reported immediately to FMPC Medical for treatment/evaluation. The employee's supervisor shall be notified as soon as possible after reporting to FMPC Medical.

Minor Injuries

Minor injuries (sprains, strains, and cuts) are to be controlled by the on-site medical department.

Serious Injuries

The FMPC Medical Facility maintains an emergency life squad crew and ambulance for all shifts, seven days a week. Immediately notify the Communication Center by telephoning 6511 (738-6511) or by radio to report a serious injury. Any FMPC personnel on the scene of the injury may (if trained) use standard first aid procedures to stabilize the injury pending arrival of FMPC response personnel.

Coronary Pulmonary Resuscitation (CPR) should be administered only by persons currently certified in CPR. Prior to performing CPR, consider the causation of the victim's collapse and look for chemicals around the nose and mouth which can endanger the rescuer.

Injuries Complicated by Contamination

Assume that all injuries within the process area involve radioactive contamination until proven otherwise. In most instances, the site contamination is of concern only if long-term exposure has occurred. The injury is to be given the highest priority. The contamination shall be reduced as soon as practical.

Injuries complicated by chemical contamination will be evaluated after hazards associated with the contamination are considered. Injuries of persons contaminated with acutely toxic chemicals will be treated to minimize the hazard to both the rescuer and the victim.

- Move the victim into an uncontaminated area and perform a preliminary decontamination. A more thorough decontamination can be performed at a later time. Preliminary decontamination generally consists of flushing with water to dilute and remove most of the chemical or radiological contamination. It also includes removal of contaminated clothing.

- As soon as the chemical hazard has been reduced to an acceptable level, stabilize the victim.

- Minimize the spread of contaminant through run off.

- Notify the Communication Center of:

  - Chemical involvement
  - Extent of injuries
  - What treatment has been performed (including decontamination)
  - Number of victims
  - Your location
  - Telephone number
  - You **HANG UP LAST**. The dispatcher is trained to be calm and ask for the appropriate information in the order that it appears on his/her form. In some instances, the facility may be complex and require additional information such as cross streets or an escort from the entrance to the site.

12.2 Chemical/Radiological Releases

If a release in the form of a spill, leak or vapor cloud is observed, immediately move at least 300 feet upwind and immediately notify authorities:

Radio to Communication Center or call 6511 (738-6511). The Communication Center will dispatch the necessary personnel to handle the situation.

If possible, include the following information in the notification:

- Cause of release if known
- Location of release
- Time of release
- Chemical identity and quantity involved
- Any radioactive involvement
- Any materials that are leaving the area as a vapor/gas
- If a fire is involved
- The number of known exposures or injuries

Additional information may be requested such as:

- What has been done or is being done to minimize the hazard
- The degree of hazard to responders based on the notifying personnel's knowledge of the contaminant(s).

12.3 Chemical Splashes

Eyes - Move the victim to an uncontaminated area if possible. Hold the victim's eyes open and flush the victim's eyes for 15 minutes with water (or isotonic saline). The natural response to eye pain is to close the eyes. Keep the victim's eyes open to remove chemical from under the victim's eyelids. Flushing solution should be maintained near body temperature because it can cause extreme discomfort if it is too hot or too cold.

In cases of chemical splashes to the eyes:

- Notify the Communication Center and:
  - Give the name of the chemicals involved, if known.
  - Explain what was done to treat the patient(s).
  - Give notification of how many patients to expect.

Skin - Move the victim to an uncontaminated location. Remove contaminated clothing and wash the affected skin areas. Flush the skin for 15-30 minutes and report to FMPC Medical Department immediately.

12.4 Site Evacuation

Should a situation require an emergency evacuation of the site, all equipment shall be turned off and left in place. Personnel shall proceed to the nearest rally point (see Figure 3) and await further instructions.

12.5 Communication

The supervisor or their worksite designee for the subcontractor will have a Rust frequency two-way radio at all times to receive notification of a plant wide emergency or to notify FMPC Communication Center in the event of an emergency at the project site.

12.6 Fire Emergency

In the event of a fire it shall be reported immediately by radio to the FMPC Communication Center who will in turn notify FMPC Fire and Safety, or the fire will be reported by telephoning the Emergency No. 6511. Someone should standby to direct the FMPC Emergency Response Team to the scene of the emergency.

12.7 Medical Emergency

In the event of a medical emergency, the incident shall be immediately reported by radio to FMPC Communications Center who will in turn notify Fire and Safety, or the medical emergency will be reported by telephoning the Emergency No. 6511. All injuries, no matter how minor, shall be reported to FMPC Medical Services immediately.

12.8 Hospitals

The nearest medical facility is the FMPC Medical Facility. It is the primary choice for on-site injuries. The FMPC ambulance will transport the injured to the nearest hospital if necessary. FMPC maintains an emergency response capability which includes an ambulance and Emergency Medical Technician (EMT) personnel.

12.9 Maps - In addition, the following are attached for reference:

- FMPC Rally Points (Figure 3)
- Emergency Routing to FMPC Medical Facilities (Figure 4)

12.10 Emergency Telephone Numbers

Emergency: 6511

Ambulance: 6511 (738-6511 or 6217)

FMPC Medical: 6511 (738-6511)

Fire: 6511 (738-6511)

Name	Work	Radio
COMMUNICATION CENTER	6511 (738-6511)	CONTROL
Utility Engineer (AEDO)	6295 (738-6295)	202
Industrial Hygiene	6207 (738-6207)	357
Radiation Safety	6889 (738-6889)	355
Fire and Safety	6235 (738-6235)	303
Liquid Waste	8908 (738-8908)	
Bioassay	6224 (738-6224)	
Dosimetry	6215 (738-6215)	

AEDO - Assistant Emergency Duty Officer

13.0 AMENDMENTS

This Project/Task Specific Health and Safety Plan is based on information available at the time of preparation. Unexpected conditions may arise which require reassessment of safety procedures. It is important that personnel protective measures be thoroughly assessed by the supervisor in charge and IRS&T representative prior to and during the planned task activities. Unplanned activities and/or changes in the hazard status shall require a review of and may require changes in this plan.

Changes in the anticipated hazard status or unplanned activities are to be submitted as an amendment to this Project/Task Specific Health and Safety Plan.

Amendments must be approved by the plan author and IRS&T prior to implementation of the amendment.

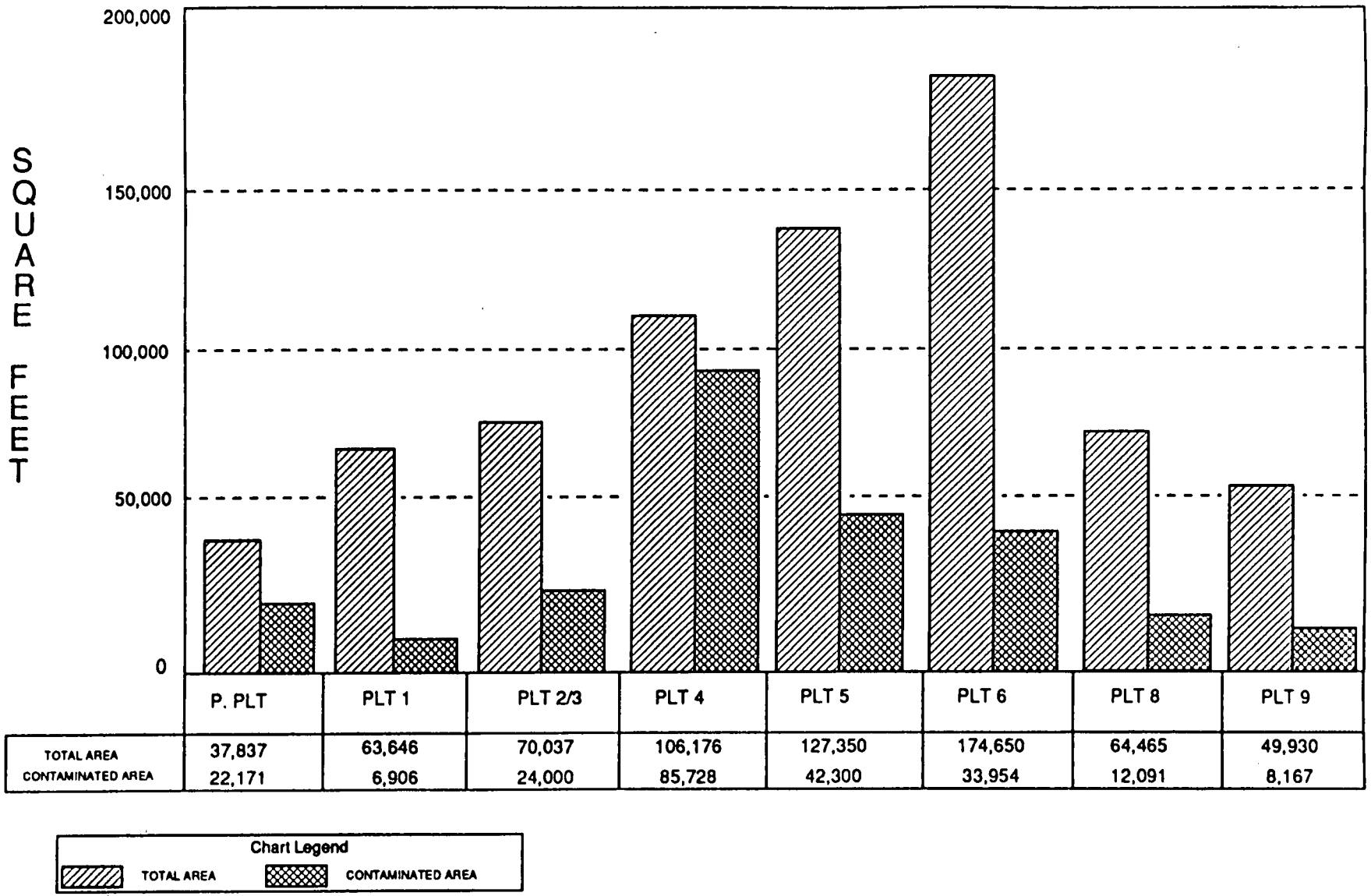

	P. PLT	PLT 1	PLT 2/3	PLT 4	PLT 5	PLT 6	PLT 8	PLT 9
TOTAL AREA	37,837	63,646	70,037	106,176	127,350	174,650	64,465	49,930
CONTAMINATED AREA	22,171	6,906	24,000	85,728	42,300	33,954	12,091	8,167

Figure 1. Process Area Chart Showing Total Area and Contaminated Area - 1991.

LABORATORY RADIOLOGICAL SURVEY RESULTS

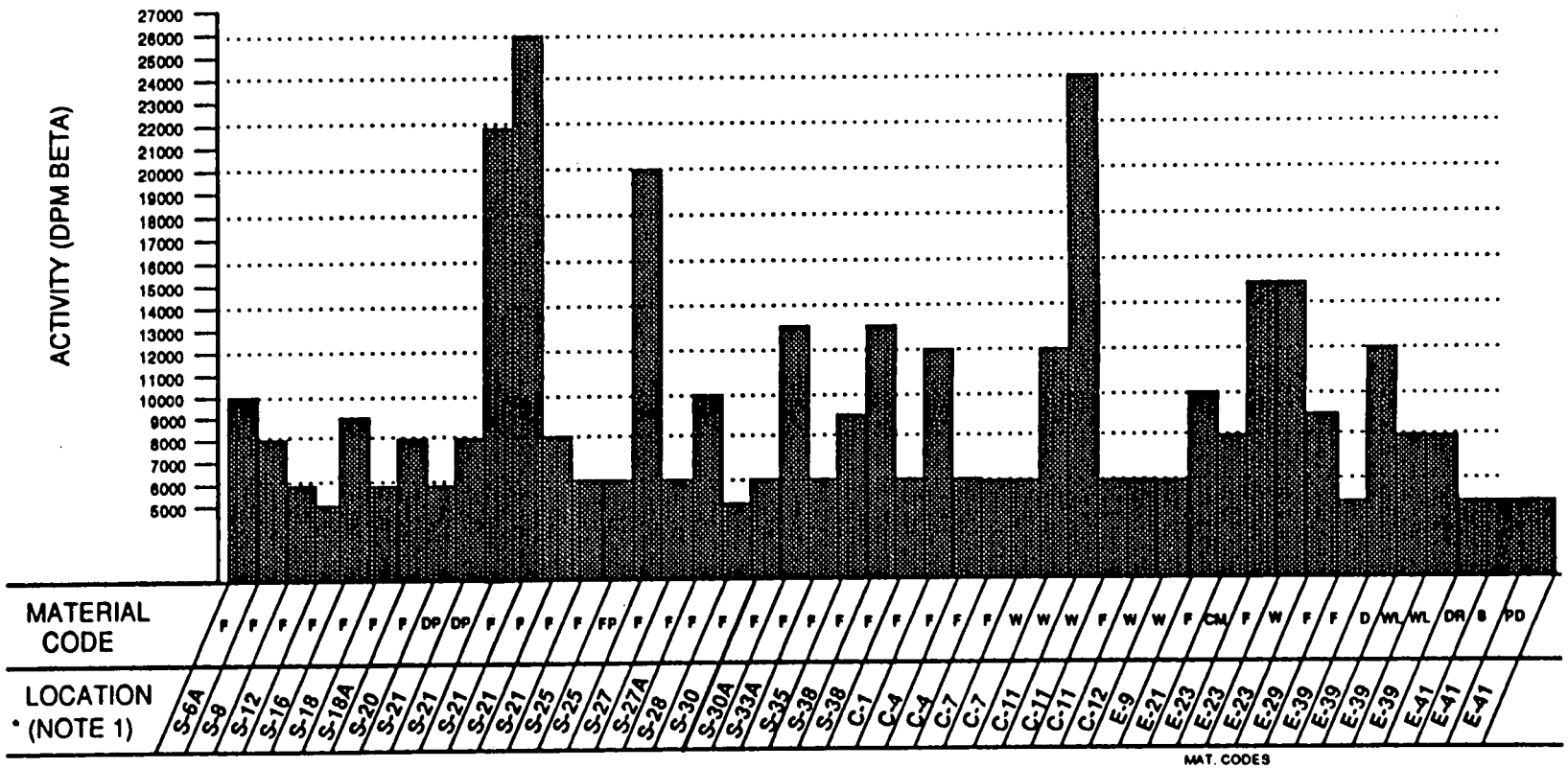

* NOTE 1: ALL ENTRIES SPECIFY ROOM NUMBERS WITHIN THE LAB BUILDING.
RAD. SURVEYS PERFORMED ON 11-4-90, 3-29-91, AND 4-13-91.

MAT. CODES

F = FLOOR
W = WINDOW
FP = FLOOR PLUG
PD = PIPE DRAIN
S = SINK
D = DRAIN PLUG
DP = DECK PLATE
DR = DRAIN
CM = COMPUTER MONITOR
WL = WINDOW LEDGE

Figure 2. Nonprocess Side Data (Sheet 1 of 6)

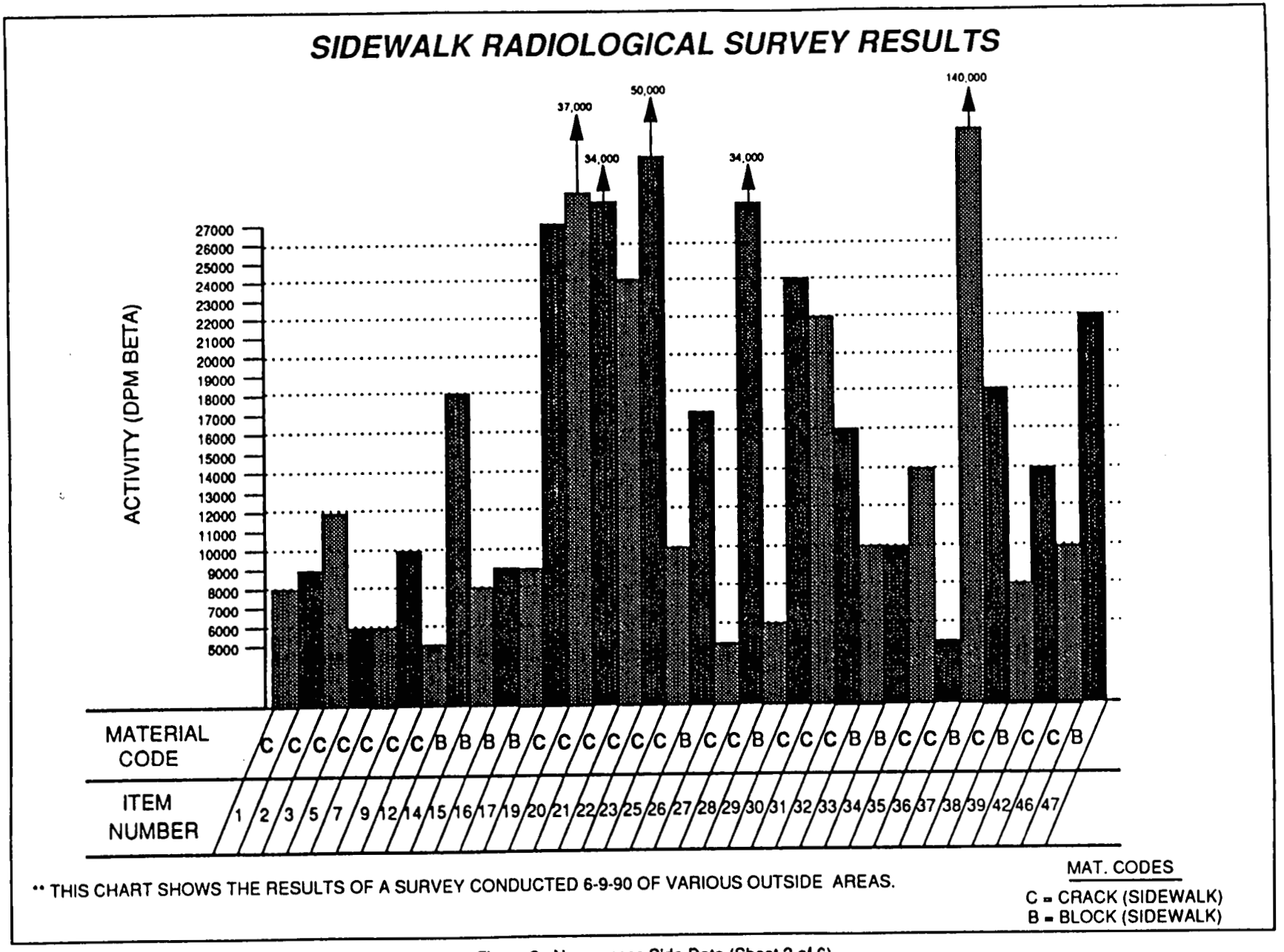

Figure 2. Nonprocess Side Data (Sheet 2 of 6)

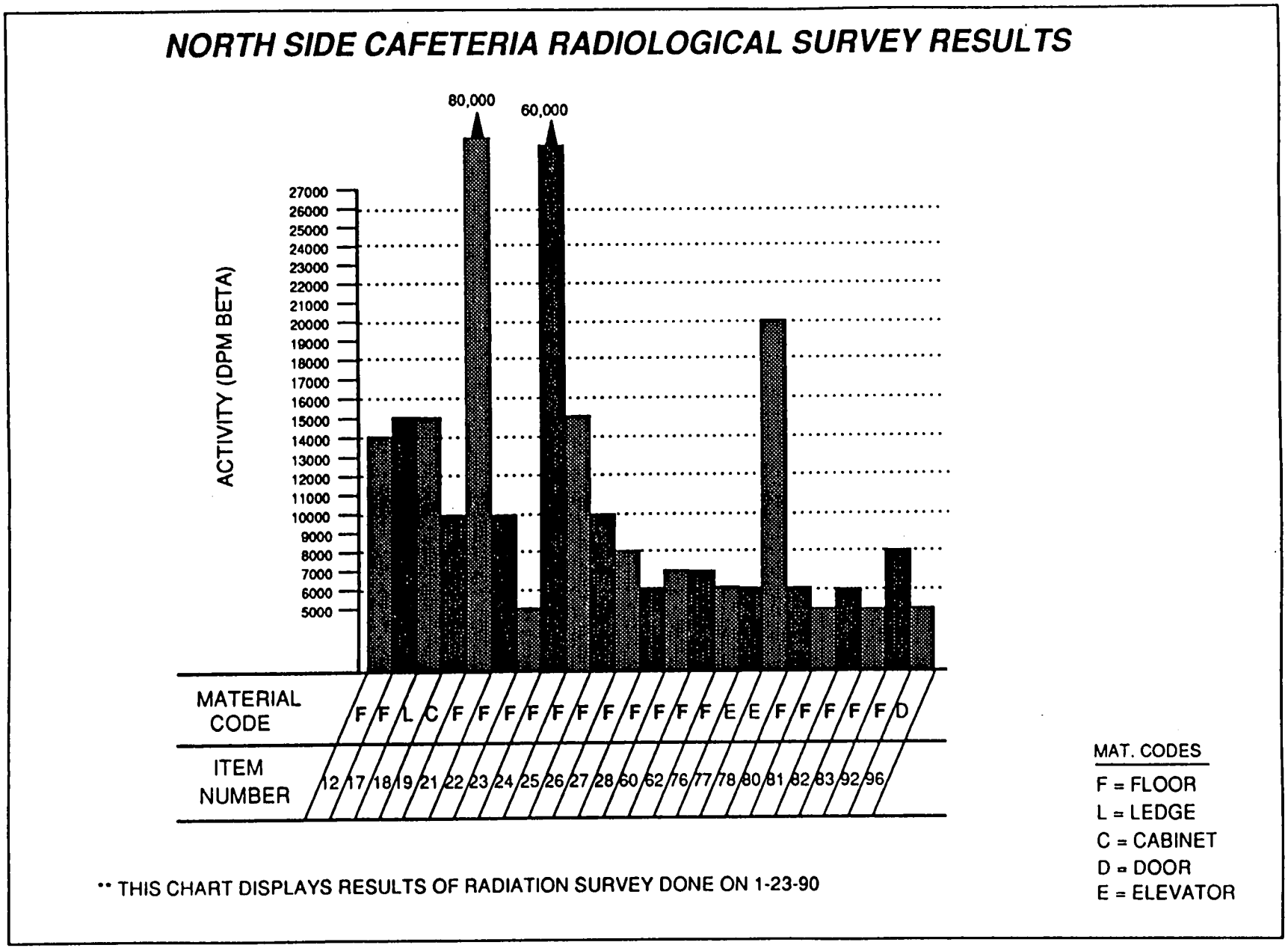

Figure 2. Nonprocess Side Data (Sheet 3 of 6)

SECURITY SHACKS/TURNSTILES RADIOLOGICAL SURVEY RESULTS

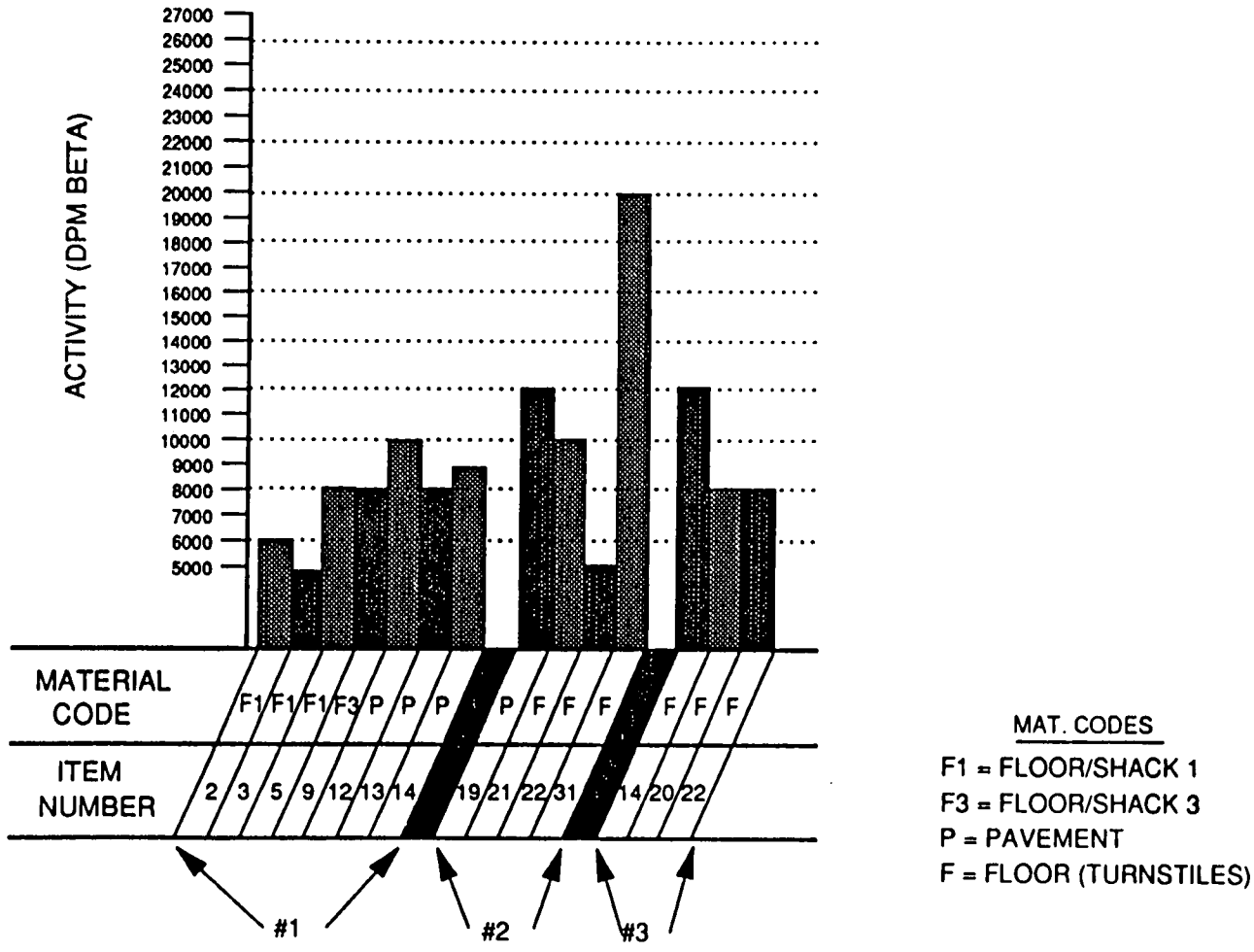

** SURVEY #1 TAKEN 4-22-90
SURVEY #2 TAKEN 5-27-90
SURVEY #3 TAKEN 6-9-90

Figure 2. Nonprocess Side Data (Sheet 4 of 6)

ADMINISTRATIVE BLDG & SERVICE BLDG RADIOLOGICAL SURVEY RESULTS

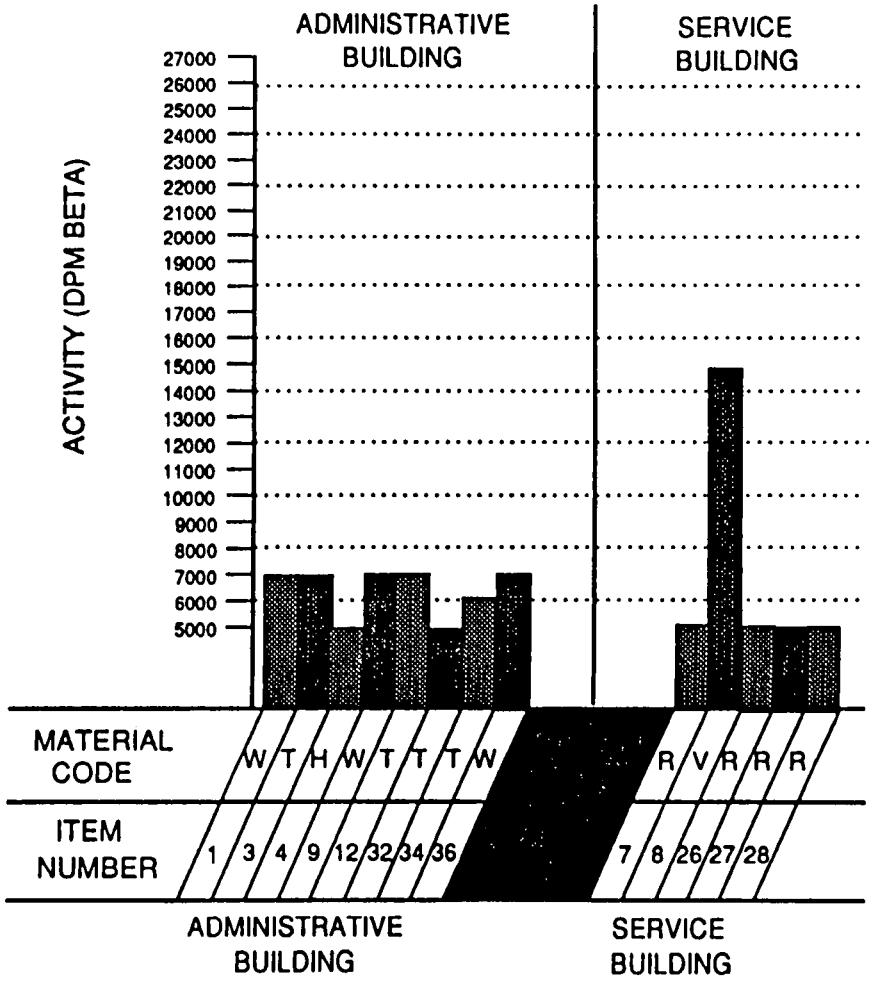

** SURVEY OF ADMINISTRATIVE BLDG ACCOMPLISHED 1-14-91
SURVEY OF SERVICE BLDG ACCOMPLISHED 6-15-90

ADMINISTRATIVE BLDG ROOM NUMBERS

ITEM 1 - 114D
ITEM 3 - MENS ROOM
ITEM 4 - MENS ROOM
ITEM 9 - 14-130
ITEM 12 - 28-52
ITEM 32 - 14-19
ITEM 34 - CASHIER AREA
ITEM 36 - CASHIER AREA

MAT. CODES

W = WINDOW
T = TRACK (WINDOW)
H = HINGE (WINDOW)
R = ROOF
V = VENT

Figure 2. Nonprocess Side Data (Sheet 5 of 6)

HUMAN RESOURCES UTILITY ROOM, VARIOUS OUTSIDE LOCATIONS, & LAUNDRY ROOF RADIOLOGICAL SURVEY RESULTS

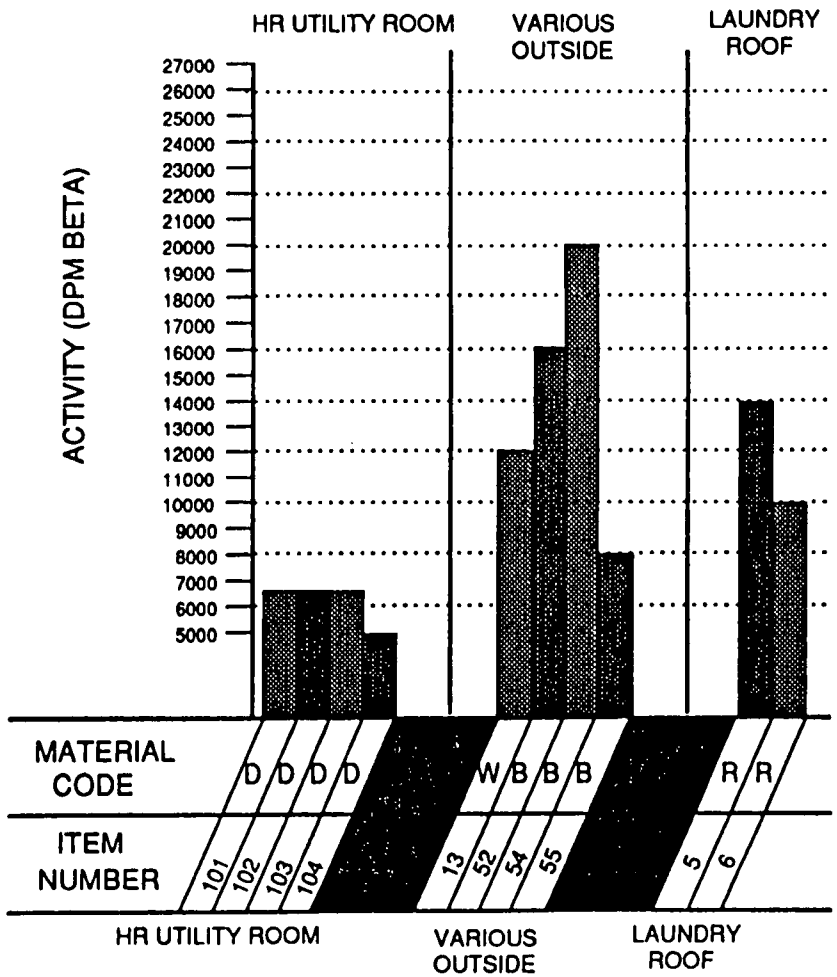

MAT. CODES

D = DUCT
W = WOOD
B = BLACKTOP
R = ROOF

** SURVEY OF HR UTILITY ROOM DONE 7-19-90
SURVEY OF VARIOUS OUTSIDE LOCATIONS DONE 6-9-90
SURVEY OF LAUNDRY ROOF DONE 6-8-90

Figure 2. Nonprocess Side Data (Sheet 6 of 6)

FMPC ALARM SIGNALS

EMERGENCY SIGNALS ARE TRANSMITTED VIA ALARM HORNS AND SIRENS, AND INSTRUCTIONS ARE TRANSMITTED VIA THE EMERGENCY MESSAGE SYSTEM. THE ALARM SIGNALS ARE:

2-2, 2-2 AMBULANCE, FIRE, SECURITY EVENT

Radio message to Emergency Response Team (ERT).
Emergency Message System (EMS) message follows with general information.

3-3, 3-3 SUPERVISOR ALERT

Emergency Message System (EMS) and radio message follows, and may include weather information, all clear, evacuation, test (every Monday at 2 p.m.), or other announcements.

In case of: Tornado

- Take immediate cover.
- In FMPC buildings, go to the lowest floor or designated shelter area. Avoid glassed areas, large roof spans, windward sides of buildings, and load-bearing walls.
- In open country, lie face down in the nearest depression, such as a ditch, and protect your head with your arms.
- Await all-clear announcement.

Evacuation

- Park vehicle along the side of the road.
- Go to the nearest rally point (see map below).

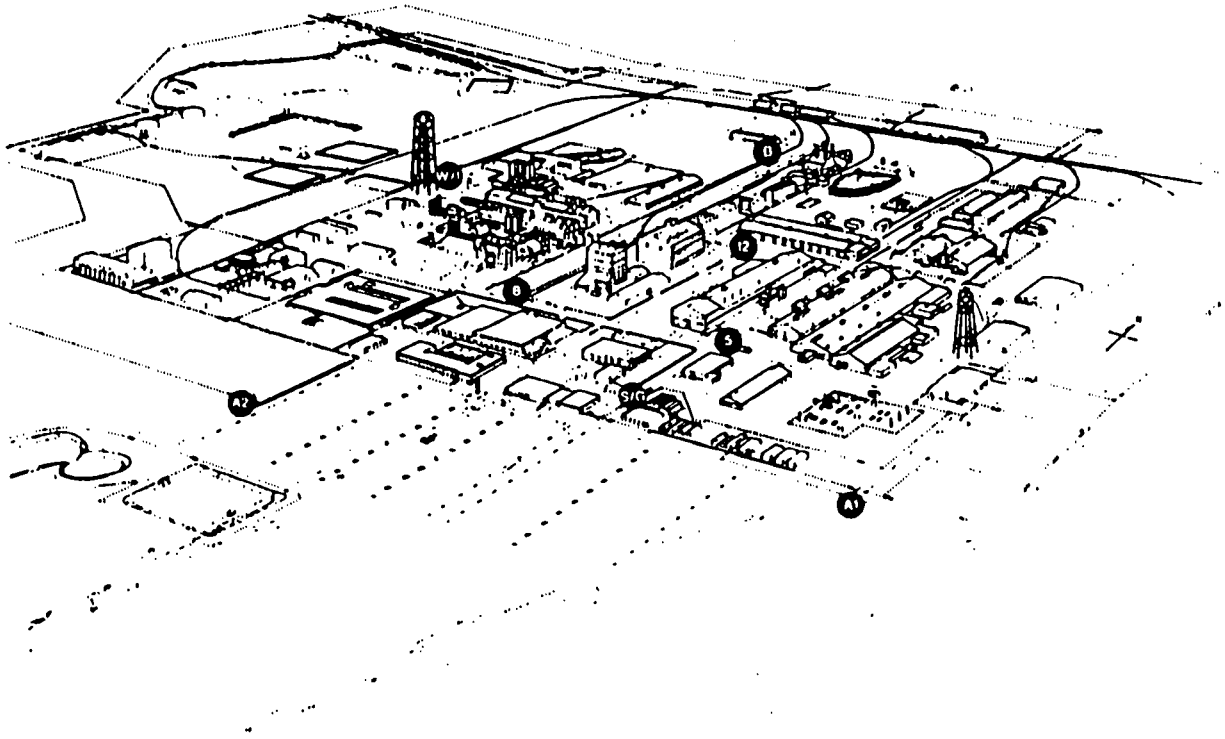

RALLY POINTS

I.D. Label	Plant or Area Description
A1	Administration
A2	Alternate Administration
B	Boiler Plant
S/G	Security & Garage
W/1	Waste Pit Area & Plant 1
5	Plant 5
8	Plant 8
12	Building 12

FIGURE 3 RALLY POINTS

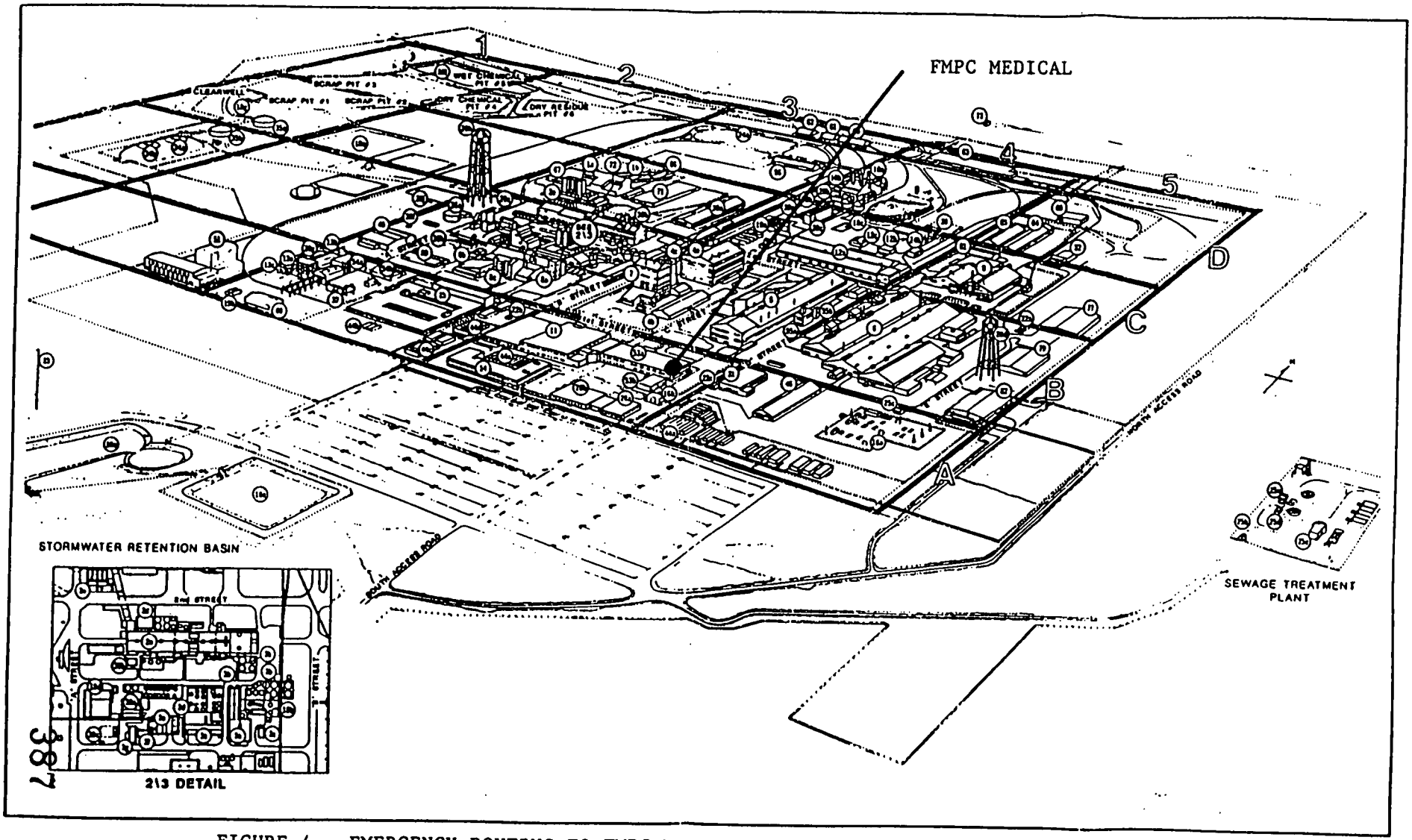

FIGURE 4 EMERGENCY ROUTING TO FMPC MEDICAL FACILITY

SURVEY RESULT TABLES

LOCATION	PAGE
Administration Building	T 1
Cafeteria	T 2
Human Resources Utility Room	T 3
Laboratory	T 4
Laundry Roof	T 9
Security Turnstiles	T10
Service Building	T13
Various Outside Locations	T14

ADMINISTRATION BUILDING
1-14-91 / 1700 HRS

MAT. CODE	ROOM NUMBER	ITEM NUMBER	ACTIVITY (DPM BETA)
W	114D	1	7000
WT	MR	3	7000
WH	MR	4	5000
W	14-130	9	7000
WT	28-52	12	7000
WT	14-19	32	5000
WT	CA	34	6000
W	CA	36	7000

MATERIAL CODE:
W - WINDOW
CA - CASHIER AREA
MR - MENS ROOM
WT - WINDOW TRACK

CAFETERIA
1-23-90 / 1530 HRS

MAT. CODE	ROOM NUMBER	ITEM NUMBER	ACTIVITY (DPM BETA)
F	NA	12	14000
F	NA	17	15000
L	NA	18	15000
C	NA	19	10000
F	NA	21	80000
F	NA	22	10000
F	NA	23	5000
F	NA	24	60000
F	NA	25	15000
F	NA	26	10000
F	NA	27	8000
F	NA	28	6000
F	NA	60	7000
F	NA	62	7000
F	NA	76	6000
EL	NA	77	6000
EL	NA	78	20000
F	NA	80	6000
F	NA	81	5000
F	NA	82	6000
F	NA	83	5000
F	NA	92	8000
DR	NA	96	5000

MATERIAL CODES:
F - FLOOR
L - LEDGE
C - CABINET
DR - DOOR
EL - ELEVATOR

HUMAN RESOURCES UTILITY ROOM
7-19-90 / 2345 HRS

MAT. CODE	ROOM NUMBER	ITEM NUMBER	ACTIVITY (DPM BETA)
D	NA	101	6500
D	NA	102	6500
D	NA	103	6500
D	NA	104	5000

MATERIAL CODES: D - DUCT

LABORATORY
11-4-90 / 0930 HRS

MAT. CODE	ROOM NUMBER	ITEM NUMBER	ACTIVITY (DPM BETA)
F	NA	23	8000

MATERIAL CODES: F - FLOOR

LABORATORY 11-4-90

MAT. CODE	ROOM NUMBER	ITEM NUMBER	ACTIVITY (DPM BETA)
F	C-1	23	6000
F	C-4	24	12000
F	C-4	25	6000
F	C-7	26	22000
W	C-7	27	10000
W	C-11	28	15000
W	C-11	29	20000
F	C-11	30	10000
W	C-12	31	6000
W	E-9	32	6000
F	E-29	33	9000
F	E-39	34	6000
F	E-39	35	15000
DR	E-39	36	10000
W	E-39	37	8000
F	E-41	38	10000
F	E-41	39	10000

MAT. CODES: F - FLOOR
W - WINDOW
DR - DRAIN PLUG

LABORATORY 11-4-90

MAT. CODE	ROOM NUMBER	ITEM NUMBER	ACTIVITY (DPM BETA)
F	S-8	1	8000
F	S-12	2	6000
F	S-18	3	6000
F	S-18	4	8000
F	S-18	5	10000
F	S-20	6	8000
DP	S-21	7	6000
DP	S-21	8	8000
F	S-21	9	22000
F	S-21	10	26000
F	S-21	11	8000
F	S-25	12	8000
F	S-25	13	7000
F	S-27	14	20000
F	S-27A	15	6000
F	S-28	16	10000
F	S-30	17	5000
F	S-30A	18	6000
F	S-33A	19	13000
F	S-35	20	6000
F	S-38	21	9000
F	S-38	22	13000

MAT. CODES: F - FLOOR
DP - DECK PLATE

LABORATORY
3-29-91

MAT. CODE	ROOM NUMBER	ITEM NUMBER	ACTIVITY (DPM BETA)
F	E-21	42	10000
CM	E-23	43	8000
F	E-23	44	15000
W	E-23	45	15000
DR	E-41	47	5000
S	E-41	48	5000
PD	E-41	49	5000
F	S6A	51	10000
F	E-39	89	5000
D	E-39	91	12000
DR	E-39	93	5000
WL	E-39	94	8000
WL	E-39	95	8000

MATERIAL CODES:

F - FLOOR
D - DRAIN PLUG
DR - DRAIN
WL - WINDOW LEDGE
S - SINK
PD - PIPE DRAIN
CM - COMPUTER MODULE
W - WINDOW

LABORATORY 4-13-91

MAT. CODE	ROOM NUMBER	ITEM NUMBER	ACTIVITY (DPM BETA)
F	S-16	65	5000
F	S-18A	70	6000
F	S-18	76	9000
F	S-25	86	6000
FP	S-25	88	6000
W	C-11	96	12000
W	C-11	97	24000
F	C-11	98	6000
W	C-7	139	6000
W	C-7	141	6000

MATERIAL CODES:
F - FLOOR
WP - FLOOR PLUG
W - WINDOW

LAUNDRY ROOF
6-8-90 / 1800 HRS

MAT. CODE	ROOM NUMBER	ITEM NUMBER	ACTIVITY (DPM BETA)
R	NA	5	14000
R	NA	6	10000

MATERIAL CODES: R - ROOF

SECURITY SHACK & TURNSTILES
4-22-90 / 0115 HRS

MAT. CODE	ROOM NUMBER	ITEM NUMBER	ACTIVITY (DPM BETA)
F-1	NA	2	6000
F-1	NA	3	5000
F-1	NA	5	8000
F-3	NA	9	8000
P	NA	12	10000
P	NA	13	8000
P	NA	14	9000

MATERIAL CODES:
P - PAVEMENT
F-1 - FLOOR/SHACK 1
F-3 - FLOOR/SHACK 3

SECURITY TURNSTILES
5-27-90 / 0530 HRS

MAT. CODE	ROOM NUMBER	ITEM NUMBER	ACTIVITY (DPM BETA)
P	NA	19	12000
F	NA	21	10000
F	NA	22	5000
F	NA	31	20000

MATERIAL CODES: F - FLOOR
P - PAVEMENT

SECURITY TURNSTILES
6-9-90 / 0138 HRS

MAT. CODE	ROOM NUMBER	ITEM NUMBER	ACTIVITY (DPM BETA)
F	NA	14	12000
F	NA	20	8000
F	NA	22	8000

MATERIAL CODES: F - FLOOR

SERVICE BUILDING
6-15-90 / 1530 HRS

MAT. CODE	ROOM NUMBER	ITEM NUMBER	ACTIVITY (DPM BETA)
V	NA	8	15000
R	NA	26	5000
R	NA	27	5000
R	NA	28	5000

MATERIAL CODES: R - VENT
V - VENT

VARIOUS OUTSIDE LOCATIONS
6-9-90 / 0730 HRS

MAT. CODE	ROOM NUMBER	ITEM NUMBER	ACTIVITY (DPM BETA)
SC	NA	1	8000
SC	NA	2	9000
SC	NA	3	12000
SC	NA	5	6000
SC	NA	7	6000
SC	NA	9	10000
SC	NA	12	5000
W	NA	13	12000
CB	NA	14	18000
CB	NA	15	8000
CB	NA	16	9000
CB	NA	17	9000
SC	NA	19	27000
SC	NA	20	37000
SC	NA	21	34000
SC	NA	22	24000
SC	NA	23	50000
SC	NA	25	10000
CB	NA	26	17000

MATERIAL CODES: W - -WOOD
CB - CONCRETE BLOCK
SC - SIDEWALK CRACKS

VARIOUS OUTSIDE LOCATIONS
6-9-90 / 0730 HRS

MAT. CODE	ROOM NUMBER	ITEM NUMBER	ACTIVITY (DPM BETA)
SC	NA	27	5000
SC	NA	28	34000
CB	NA	29	6000
SC	NA	30	24000
SC	NA	31	22000
SC	NA	32	16000
CB	NA	33	10000
CB	NA	34	10000
SC	NA	35	14000
SC	NA	36	5000
CB	NA	37	140000
SC	NA	38	18000
CB	NA	39	8000
SC	NA	42	14000
SC	NA	46	10000
CB	NA	47	22000
BT	NA	52	16000
BT	NA	54	20000
BT	NA	55	8000

MATERIAL CODES: BT - BLACKTOP
CB - CONCRETE BLOCKS
SC - SIDEWALK CRACKS

ITEMS NUMBERS 1 - 24 WERE TAKEN ON SIDEWALK EAST OF LABORATORY

25- 58 WERE TAKEN WORKING WEST TO EAST FROM LABORATORY ACROSS FRONT OF SERVICE BUILDING.

APPENDIX A

WORK PLAN FOR
DECONTAMINATION OF VARIOUS AREAS
OF EXISTING, FIXED OR REMOVABLE CONTAMINATION
HEALTH AND SAFETY PLAN

FEED MATERIALS PRODUCTION CENTER

1.0 WORK PLAN FOR DECONTAMINATION OF VARIOUS AREAS OF EXISTING, FIXED OR REMOVABLE CONTAMINATION HEALTH AND SAFETY PLAN

Decontamination has three purposes:

1) to prevent any uptake of radioactive material into the human body.

2) to limit external exposure.

3) to prevent further spread of contamination.

For this Work Plan, the basic method of decontamination is to remove radioactivity by one or more wet or dry processes. Decontamination methods that are deemed Removal Actions are not included in this discussion.

1.1 Cleaning, Abrasive, Chemical, and Electrochemical Decontamination Methods

Many methods and techniques have been developed for decontaminating unwanted radioactive material particles from areas of concern. Most are physical or chemical cleaning processes.

True decontamination entails removing radioactivity by cleaning, abrasive, chemical, and electrochemical methods.

- Cleaning methods are nondestructive but may require that equipment be disassembled (if not a Removal Action) for maximum effectiveness. Cleaning includes both manual (wiping, mopping, vacuuming) and mechanical (soaking, spraying, vibrating) techniques.

- Abrasive methods are destructive, involving the progressive removal of the contaminated materials.

- Chemical methods include both nondestructive techniques (e.g., the use of detergents and complexing agents, which remove contamination by emulsifying and ion exchange), and destructive techniques (e.g., the use of caustics and acids, which dissolve and corrode contamination and sometimes the base material).

- Electrochemical methods are destructive, electrolytically removing contamination and some of the base material.

Decontamination methods that will not be classified as Removal Action tasks and that will be used most often in the nonprocess and process areas:

- Nondestructive cleaning methods using detergents or soaps and water by mopping/wiping application, and/or DOP tested, HEPA filtered vacuum cleaning. (If using an Alconox based detergent, see Section 17.0, Derived Wastes).

- Removal of contaminated tar, grease, and motor oil on concrete walkways, streets, and pads.

- Removal of contaminated caulk in windows.

- Destructive abrasive methods (i.e., grinding, chipping, sanding, etc.) that will not generate more than one cubic yard waste per activity when performed in an approved containment system.

- Strippable coatings, or ALARA paint is an example of a chemical method that allows for large area decontamination of loose material with less waste produced than conventional decontamination methods. The waste residue is a film 20-30 mils thick that can be drummed and easily compressed. Strippable coatings can also be used as a sacrificial layer to prevent floors and areas from becoming contaminated. Small scale decontamination with coating resulted in a Decontamination Factor of 94 in Plant 5. Chemical methods including strippable coatings are not to be used in area decontamination efforts unless approved by Environmental Compliance, Industrial Hygiene and Safety, and Radiological Safety.

1.2 FMPC Area Decontamination

The cleaning of any surface should meet the following criteria:

1. minimal personnel exposure (direct and indirect).

2. minimal recontamination of previously cleaned surfaces.

3. minimal volume of contaminated material to be stored.

4. minimal time for removal.

5. minimal offsite release.

A Radiation Work Permit is required for all decontamination tasks which will be performed. When decontaminating large areas, clean high traffic areas first to allow passage of personnel and prevent the spread of contamination to clean areas of the plant. In general, cleaning should be performed on areas of 5 mR/hr or greater first and then from least to most contamination. The use of brooms on loose surface contamination is not authorized at the FMPC. All items used in decontamination work shall be conspicuously marked to prevent accidental use in uncontaminated areas of the site.

1.3 Nonprocess Areas

Nonprocess areas are comprised of Uncontrolled and Controlled Areas. Areas of concern are:

- Security Building and Turnstiles
- Human Resources Building
- Administration Building
- Service Building
- *Laboratory Building
- Health and Safety Building
- 10-Plex
- 7-Plex North and South
- 6-Plex
- Radiological Safety Trailer T-19

  * The laboratory decontamination is not part of this Plan.

Many of the administrative areas can be effectively decontaminated by a damp wipe for the loose material, and removal of floor tiles, wallboard, or ceiling tiles for the fixed contamination. Hand or mechanical scrubbing may be required to remove the contamination on the substrate. Removal of the top layer of substrate may be required in areas in the lab building where the contamination has been allowed to sit for many years. For the outside areas, replacement of the sidewalks might be the only cost effective method available, as they are very porous and decontamination may well prove to be unreasonable. The physical removal tasks (either individually or collectively) of the building materials mentioned above could result in classification as a Removal Action and is not considered part of this work plan.

Nonprocess Area decontamination (if required) will focus primarily on presently designated Uncontrolled Areas. Additional potential problem areas are: Window frames, Service and Lab building penthouses, all pre-existing ventilation systems, air movers, air filtration units, and associated ductwork before 1988, old radiator heaters, cement flooring, Service Building N. Elevator shaft, maintenance service bays, pre-existing telephone jack terminals and cable access ports, and roofing materials. Other surfaces could be painted or waxed. Area specific evaluation for decontamination methods will have to be assessed.

1.4 Process Area

The process area of the FMPC is comprised of Controlled and Radiological areas and encompasses all former Production Area buildings, Boiler Plant, Water Treatment, General Sump, Decontamination Building, Pads, outside storage tank areas all of which is north of the service building with the exception of Rimia.

Radioactive contamination exists within numerous process area buildings and plants. This contamination consists of radiologically contaminated particles which are emitting alpha, beta and gamma activity. These particles adhere to surfaces within the plants and in outdoor areas. The material composition of the surfaces are variable but include: concrete, gravel, metal, painted surfaces and inplant floors, side walls and ceiling structures.

Radiological contamination has been identified in the following locations:

Pilot Plant	Plant 5
Plant 1	Plant 6
Plant 2/3	Plant 8
Plant 4	Plant 9

Loose contamination on process area floors can be removed using floor scrubbers, or strippable coatings as described earlier. Use of automatic floor scrubbers has been a common practice at the FMPC for the past few years. Care must be taken to clean the units during and after use. These will concentrate the contamination on the bottom pads, and, after a short while will degrade the effectiveness of the cleaning. The pads must be replaced on a regular basis and internals of the units should be flushed after use. Loose contamination on process equipment can be removed using soap and water washing. This will be a lab intensive job, however given the location and geometry of the equipment, little else is available.

Soap and water can also be used to clean walls and other surfaces in the plants. Vacuuming of contaminated surfaces is only effective if the contamination is visible and loose. Rarely will vacuuming alone remove all the loose contamination on any surface, and wipe down will be required.

Fixed contamination in the process area presents a different problem. The only methods available for large area decontamination would be those using high velocity fluids or abrasive. Concrete scabbling of the process area floors and pads will remove the contamination, as well as most of the contaminated flooring which may or may not be a removal action. A determination should be made prior to beginning this activity as to how deep the contamination goes. It might not be cost effective to decontaminate these areas and other options might need to be investigated. Plain removal of

process equipment will probably decontaminate the exterior surfaces acceptably.

Area or room decontamination in any case should follow these guidelines:

1. Work from top down working on areas of 5 mR/hr or greater first and then from least to most contaminated.

2. Control material and equipment entering the area to minimize decontamination effort.

3. Cover or remove non-contaminated items prior to starting decontamination.

4. Ensure follow up surveys are complete and comprehensive prior to releasing area to verify decontamination.

1.5 Decontamination Methods

Unsealed Concrete Surfaces

Due to it's porus nature, concrete is difficult to decontaminate. A smooth hard surface (such as under floor tiles) will be easier to decontaminate than a rough surface (such as a sidewalk). Where loose dry contamination is present, scrubbing and subsequent vacuuming of the area will suffice. Where the contamination is imbedded, a removal technique, such as scabbling will be necessary.

Tile Surfaces

Tile surfaces are most easily decontaminated by mopping with cleaning solution and allowing the floor to dry. If progress is not made after two attempts, or the contamination is imbedded, replacement of the floor tile will be necessary.

Asphalt Surfaces

When decontaminating asphalt surfaces, inspect the area for spots of wet or greasy contamination. These areas should be wiped or scraped up first. Seldom will the contamination be removed with a single intensive effort. Physical removal of part of the asphalt surface will probably be required. Scrubbing or use of abrasive equipment in conjunction with a vacuum unit is recommended when removing large areas of contamination.

Sealed Concrete Surfaces

Sealed concrete surfaces should start with a damp rag wipedown to remove loose contamination. In some cases, it may be necessary to strip the floor sealant and scrub or remove the concrete. Removal should be controlled to minimize potential for airborne contamination.

Concrete or Asphalt Cracks

The primary decontamination technique will consist of vacuuming to remove loose material from the crack. Upon completion of the primary decontamination effort, a survey of the affected area will be performed to determine the efficiency of the decontamination effort. If the survey results show values which remain above established guidelines, the crack fill material will be loosened by the use of a small diameter stainless steel metallic rout. As the crack fill material is loosened, the material will be vacuumed up.

Other Surfaces

Decontamination of other area surfaces not discussed here will employ specific techniques determined on an as needed basis.

1.6 Equipment Decontamination

In place decontamination is usually performed prior to or in conjunction with system disassembly. The following guidelines may be used:

1. Cover floor under the component or equipment being decontaminated so that spills or run-off of solutions will be contained.

2. Wet wipes (if used) in cleaning solutions only once.

3. Wipe surface in one direction (as opposed to back and forth) from lower to higher contamination.

4. After the first clean surface of a wipe is used, refold the rag to clean surface until the rag has been completely used.

5. Dispose of waste per Radiological Safety Instructions.

Decontamination should be followed by a comprehensive survey performed by WMCO RSTs to determine the effectiveness of the cleaning. This should not be confused with surveys performed during the cleaning to mark progress. The final survey of the area or the materials should be a "stand alone" probe and smear survey documenting the decontamination. Decontamination factors can be determined by taking the ratio of initial activity to final activity.

1.7 Personnel/Equipment Contamination Detection

Control of contamination is a routine part of work at the FMPC. Contamination control zones have been established with specific entry and exit requirements. Entry requirements include wearing designated protective clothing when entering a zone. Exit requirements include monitoring to ensure that personnel and equipment moving into another zone meet the requirements for contamination control requirements. Personnel handling process materials or renovating equipment or structures (i.e., performing work) shall make a complete clothing change from personal clothing to protective clothing and shoes. Also they shall shower prior to changing back into personal clothing.

If contamination is detected, personnel shall call a Radiological Safety Technician before trying to decontaminate themselves. The effectiveness of decontamination will be determined by frisking with a hand-held radiation monitor or with a hand and foot monitor as provided by WMCO.

The monitor must be held within 1/2 inch of the surface that is monitored in order to measure radiation. If frisking count exceeds above background DETECTABLE, additional decontamination is required. Frisking will occur at 1" per second over the surface being monitored.

Vehicles and other equipment used on-site must be monitored by a Radiation Safety Technician for contamination (and decontaminated if necessary) before moving them to non-contaminated areas. Heavy equipment generally requires decontamination. Frisking and/or wipe tests will be used to confirm the effectiveness of decontamination. WMCO personnel will determine when the equipment is safe to move to clean areas.

1.8 Personnel Decontamination

Decontamination reduces contaminant concentrations to acceptable levels. Personnel are instructed to avoid skin contamination, where possible, by making minimum contact with the contaminant, whether it be a radiological or chemical hazard.

Personnel shall notify a Radiological Safety Technician if contamination is detected on themselves. Injuries take precedence over decontamination. When dealing with an injured person, allow medical personnel to perform their jobs before you interfere. The AEDO must be notified in all cases of skin contamination. This is required by DOE Order 5000.3A. Medical personnel should be in attendance for all personnel decontamination methods involving any chemical agent other than soap and water.

1.9 Equipment/Materials Decontamination

Equipment, materials, and large surface areas may need to be decontaminated for a number of reasons, including:

- for release for unrestricted use.
- to downpost Contamination Area zones in process area to Controlled or Radiological status.
- for the salvage of valuable material.
- to reduce the volume of contaminated waste.
- to reduce the potential for exposure.
- for characterization prior to construction projects.

Decontamination should be performed as soon as possible after contamination occurs. This is particularly true for liquid contaminants which can penetrate further into materials as contact time increases.

Materials that cannot be easily or cost-effectively decontaminated should be evaluated for possible limited use in posted Contamination Area zones, or disposed of. Porous items (such as wood and unsealed concrete), intricately designed equipment, and items of low replacement cost tend to fall in this category.

APPENDIX B

DEFINITIONS

- Absorbed Dose: The energy imparted to matter by ionizing radiation per unit of irradiated material at a place of interest in that material. The absorbed dose is expressed in units of rad.

- Airborne Radioactivity Area: A location where the quantity of radioactivity suspended in a given volume air exceeds one tenth the DAC on an 8-hour time weighted average.

- As Low As Reasonably Achievable (ALARA): An approach to radiation and resulting doses to the public are maintained as far below the specified limits as economical, technical, and practical considerations will permit.

- Bioassay Program: Urine sampling program.

- Comprehensive Environmental Response, Compensation and Liability Act/Superfund Amendments Reauthorization Act of 1986 (CERCLA/SARA): Title 40, Code of Federal Regulations, Sections 260-280 (40 CFR, 260-280). An act enabling the EPA to investigate and clean-up inactive/abandoned or uncontrolled hazardous waste sites.

- Controlled Area: Any area to which access is controlled in order to protect individuals from exposure to radiation and radioactive materials.

- DAC: Derived Air Concentration; the maximum allowable concentration of airborne radioactivity as listed in DOE 5480.11. It is based on a worker inhaling 2400 m^3 of air during a 2000 hour work year and a dust particle size of 1 micron.

- Decontamination: The removal of hazardous substances from employees and their equipment to the extent necessary to preclude the occurrence of foreseeable adverse health effects.

- Dose Equivalent: The product of absorbed dose (D) in rads in tissue, a quality factor (Q), and other modifying factors (N). Dose equivalent (H) is expressed in units of rem.

- Environmental Media: All physical materials that may be disturbed or removed by any phase of construction and removal projects.

- Exclusion Zone: Zone of high potential hazard due to physical or chemical dangers.

- Explosive Limit: The maximum (UEL) and minimum (LEL) concentration of vapor or gas in air or oxygen above or below which explosion or propagation of flame does not occur in the presence of a source of ignition. The explosive or flammable limits are usually expressed in terms of percentage by volume of vapor or gas in air.

- Exposure Standard: Risk analyses based on chemical contaminants. Permissible Exposure Limits (PELs) are located in 29 CFR Part 1910, Subpart Z - Toxic and Hazardous Substances, Section 1910.1000 Air Contaminants.

- Fumes: Solid particles generated by condensation from the gaseous state, generally after volatilization from molten metals. This physical change is often accompanied by a chemical reaction, such as oxidation. Fumes flocculate and sometimes coalesce. The solid particles that make up a fume are extremely fine, usually less than 1.0 micron.

- Gases: Normally formless fluids which occupy the space or enclosure and which can be changed to the liquid or solid state only by the combined effect of increased pressure and decreased temperatures.

- Health Hazard: A chemical, mixture of chemicals or a pathogen for which there is statistically significant evidence based on at least one study conducted in accordance with established scientific principles that acute or chronic health effects may occur in exposed employees. This includes chemicals which are carcinogens, toxic or highly toxic agents, reproductive toxins, irritants, corrosive, sensitizers, hepatotoxins, nephrotoxins, neurotoxins, agents which act on the hematopoietic system, and agents which damage the lungs, skin, eyes, or mucous membranes.

  Health hazards also include physical hazards. This includes kinetic energy (slip, trip, falls, struck-by) electrical energy, acoustical energy, thermal energy, radiological energy and biological hazards.

- Hnu: Trade name equipment, PID or photoionization detector, used to test for the presence of organic vapors and some types of breathing zone contaminants.

- IDLH: Immediately Dangerous to Life or Health. Represents maximum airborne concentration from which an individual would have up to 30 minutes to escape from that atmosphere without suffering any escape-impairing symptoms or any irreversible adverse health effects. This definition assumes the exposed individual is wearing no adequate respiratory protection. (NIOSH Pocket Guide to Chemical Hazards)

- Material Safety Data Sheets (MSDS): Written or printed material concerning a hazardous chemical, including the manufacturer's name, the chemical synonym, trade name, chemical family, hazardous ingredients, physical data, fire and explosion hazard data, health hazard data, reactivity data, spill or leak procedures, special protection information and special precautions.

- National Environmental Policy Act (NEPA): Title 40, Code of Federal Regulations, Sections 1500-1508, (40 CFR, 1500-1508), describes a broad national environmental policy and promotes environmental consideration in federal agency decision making. These regulations require the assessment of all major federal actions on the natural and human environments. The DOE has adopted the Council on Environmental Quality (CEQ) regulations for implementing NEPA procedures and has issued its own guidelines. Steps to be taken in regards to public interaction during events that could have environmental impacts on the public are addressed.

- Operable Unit: The division and classification of the most critical areas on the site targeted for remedial action under CERCLA/SARA based upon similarities of: the type of physical unit; wastes involved; problems being addressed; associated regulatory requirements; and types of remedial action technologies anticipated.

- Radiological Area: Any area within a controlled area where an individual can receive a dose equivalent greater than 5 mrem (50 microsieverts) in 1 hour at 30 cm from the radiation source or any surface through which the radiation penetrates, or where airborne radioactive concentrations greater than 1/10 of the derived air concentrations are present (or are likely to be), or where surface contamination levels greater than those specified in Attachment 2 of DOE Order 5480.11.

- Radioactivity Quantities and Units: The curie is the basic unit used to describe the amount of radioactivity in a sample of material. It is based upon the approximate decay rate of 1 gram of Radium which is 37 billion disintegrations per second. One curie (Ci) = 3.7×10^{10} disintegrations per second = 2.22×10^{12} disintegrations per minute.

- Regulated Area: A radiological area where surface contamination levels greater than those specified in Attachment 2 of DOE Order 5480.11.

- Rem: Acronym of roentgen equivalent man. The unit of radiation dose of any ionizing radiation that produces the same biological effect as a unit of absorbed dose of ordinary x-rays when modifying factors are applied.

- Remedial Investigation/Feasibility Study (RI/FS): "RI" means the investigation conducted to fully determine the nature and extent of the release or threat of release of hazardous substances, pollutants, contaminants, or hazardous constituents and to gather data necessary to support the feasibility study and the endangerment assessment. "FS" means the study that fully evaluates and develops remedial action alternatives to prevent, stabilize or mitigate the off-site release of hazardous substances, pollutants, contaminants, or hazardous constituents at and from the site.

- Removal Action: Consistent with Section 40 CFR 300.410 of the National Contingency Plan, the Department of Energy (DOE) shall determine the appropriateness of a removal action. Eight factors to be considered in this determination are listed in 40 CFR 300.415 (b)(2).

- Resource Conservation and Recovery Act (RCRA): Title 40, Code of Federal Regulations, Sections 260-280 (40 CFR, 260-280). An act which enables the EPA to issue regulations for a national hazardous waste management program. The regulations govern hazardous waste from the time it is created to the time of its disposal. Any waste transported off the site for treatment, storage, or disposal must be accompanied by a manifest that:

  (1) identifies who generated the waste;

  (2) provides a full description of the contents and quantity of the waste; and

  (3) designates the facility to which it must be shipped.

- Respirator Area: Any area within a Radiological area where actual airborne radioactivity concentrations exceed 2.0. DAC - hours per shift when averaged over one calendar quarter or 8.0 DAC - hours during any single shift.

- Sump: A pit or reservoir that meets the definition of tank and those troughs/trenches connected to it that serve to collect hazardous waste and/or precipitation/melt water runoff for transport to hazardous waste storage, treatment or disposal facilities.

- TBD: To Be Determined

- Thermoluminescent Dosimeter (TLD) Badge: Device worn to measure the shallow and deep dose equivalents from radiation exposure over a period of time.

- Threshold Limit Values (TLVs): Refers to airborne concentrations of substances and represents conditions under which it is believed that nearly all workers may be repeatedly exposed, day after day, without adverse effect. These values may be breathed continually for 8 hours per day without harm. Because of wide variation in individual susceptibility, exposure of some individuals at or even below the threshold limit may not prevent discomfort, aggravation of a pre-existing condition, or occupational illness. Threshold limits should be used as guides in the control of health hazards and should not be regarded as fine lines between safe and dangerous concentrations. The units of measurement are expressed as either ppm (parts of contaminant vapor or gas per million parts of air by volume at 25 degrees centigrade and 760mm Hg pressure) or mg/m^3 (approximate milligrams of particulate per cubic meter of air).

- Toxic Substances: Those gases, liquids, or solids which, through their chemical properties, can produce injurious or lethal effects upon contact with body cells.

- Vapors: The gaseous form of substances which are normally in the solid or liquid state (at ambient temperature and pressure). The vapor can be changed back to the solid or liquid state either by increasing the pressure or decreasing the temperature alone.

- Working Level (WL): Defined as any combination of the short-lived radon daughters per liter volume of air which would ultimately result in the emission of 1.3×10^5 MeV of alpha activity and which is equivalent to a radon gas concentration of 100 pCi/L at 100% equilibrium.

STEP-9

NON-CONTROLLED COPY

WESTINGHOUSE MATERIALS COMPANY OF OHIO

Revision: 2

SAFETY PROCEDURES	Title: Unrestricted Release of Materials from FMPC	SP-P-35-010 Department: IRS&T Section: RS

Authorization:

Supersedes:

Issue Date: 3/13/90

1.0 PURPOSE

To assign responsibility and establish the procedure for unrestricted release of materials from FMPC.

2.0 SCOPE

This procedure establishes the requirements and criteria necessary for unrestricted release of materials from FMPC. This procedure does not apply to release of bulk materials such as soil and concrete.

3.0 DEFINITIONS

3.1 Material - An all-inclusive term used to refer to building materials, tools, articles, etc. This procedures does not apply to bulk materials such as soil and concrete.

4.0 RESPONSIBILITIES

4.1 The manager(s) of personnel required to perform work per this procedure shall assure that affected personnel are informed or trained to the extent necessary, prior to initiation of that work.

4.2 The Radiological Safety Technicians (RST) are responsible for performing all radiation/contamination surveys required by this procedure.

4.3 The Manager of Radiological Safety shall appoint a Radiological Engineer to be responsible for review and approval of survey methods for unrestricted release of materials.

4.0 RESPONSIBILITIES (continued)

4.4 The responsible Radiological Engineer(s) shall determine the applicable survey methods and determine the applicable gross alpha and beta-gamma limits for unrestricted release of materials.

5.0 GENERAL

5.1 Radiological control must be adequate to prevent release of material from the FMPC exceeding the contamination limits of attachment A.

5.1.1 Good radiological practices (with minimum survey requirements established by the responsible radiological engineer) must be followed. The history of use of an item shall be considered in establishing minimum survey requirements.

5.2 Acceptable surface contamination levels are set forth in Attachment A for known radionuclides. Three "level" classifications of limits as well as "normal/site limits" are specified.

5.2.1 Application of level 1, 2, or 3 limits to gross alpha and beta-gamma contamination measurements on material at the FMPC requires a knowledge of the radionuclides present.

5.2.2 The predominant radionuclides of concern at the FMPC are natural and low-enriched uranium and their short-lived decay products. Contamination with thorium and radium is also possible in some areas.

5.2.3 The most restrictive limits (level 1) shall apply as gross alpha and/or beta-gamma limits whenever level 1 radionuclides are expected to be present. The normal site limits identified in attachment A shall otherwise apply unless the responsible radiological engineer prescribes the application of level 2 or level 3 gross alpha and beta-gamma limits.

6.0 PROCEDURE

6.1 Radiation/contamination surveys shall be performed with equipment which is in calibration. Instrument surveys for both total (fixed plus removable) alpha and beta/gamma contamination shall be performed. The following types of equipment shall be used:

Type of measurement	Equipment Type
Alpha	Alpha Scintillation Counter
Beta/Gamma	Pancake G-M Probe Count Rate Meter

6.0 PROCEDURE (continued)

6.2 When contacted to perform a radiation survey of a material, the RST shall complete a Radiological Survey Report form (Attachment B). The RST shall perform a survey, then complete the appropriate sections of the form.

6.2.1 When material is surveyed for unrestricted release at locations other than Controlled Area exits, material identification and control shall be maintained in either of the following ways:

6.2.2 An Article Surveyed Tag (Attachment C) shall be attached for the information of the RST at the Controlled Area exit, or

6.2.3 An Equipment and Material Pass (Attachment E) shall be provided to the custodian of the material when material is to be taken from the survey location directly to the Controlled Area exit and this material transport is verifiable by RSTs.

6.3 Release material from the FMPC only after survey results adequately demonstrate compliance with release limits.

6.3.1 For materials to be released as unrestricted, minimum survey requirements, as established by the responsible radiological engineer, must be met. Surfaces which are likely to be contaminated but are of such size, construction or location as to make them inaccessible for survey shall be assumed to exceed the limits for unrestricted release.

6.3.2 The RST shall consult the responsible radiological engineer or pre-established requirements generated by the responsible radiological engineer for application of the correct gross alpha and beta-gamma limits.

6.4 Material determined to be radioactive shall be tagged with a Radioactive Material tag (example in Attachment D). Disposition of the item shall be coordinated with Waste Technology, as appropriate.

6.4.1 Certification to individuals that material may not be released is provided by the form in Attachment F.

7.0 REFERENCES

7.1 DOE Order 5400.XX, Draft, 3-18-88, "Radiation Protection of the Public and the Environment".

7.2 U. S. Atomic Energy Commission, Regulatory Guide 1.86, June 1974, "Termination of Operating Licenses for Nuclear Reactors".

7.3 American National Standards Institute, Inc., N13.12, August 1978, "Draft American National Standard Control of Radioactive Surface Contamination of Materials, Equipment and Facilities to be Released for Uncontrolled Use".

8.0 FORMS USED

8.1 Radiological Survey Report, FMPC-OSH-1993-1.

8.2 Article Surveyed Tag, FMPC-IRS&T-1545.

8.3 Equipment and Material Pass

8.4 Certification for Contaminated Items Withheld.

9.0 ATTACHMENTS

9.1 Attachment A, Acceptable Surface Contamination Levels.

9.2 Attachment B, Radiological Survey Report.

9.3 Attachment C, Article Surveyed Tag, FMPC-IRS&T-1545.

9.4 Attachment D, Caution, Radioactive Material, Tag.

9.5 Attachment E, Equipment and Material Pass.

9.6 Attachment F, Certification for Contaminated Items Withheld.

ATTACHMENT A

ACCEPTABLE SURFACE CONTAMINATION LEVELS

	NUCLIDE[a]	AVERAGE[b c]	MAXIMUM[b d]	REMOVABLE[b e]
(3)	U-nat, U-235, U-238, and associated decay products	5,000 dpm α/100 cm^2	15,000 dpm α/100 cm^2	1,000 dpm α/100 cm^2
(1)	Transuranics, Ra-226, Ra-228, Th-230, Th-228, Pa-231, Ac-227, I-125, I-129	100 dpm/100 cm^2	300 dpm/100 cm^2	20 dpm/100 cm^2
(2)	Th-nat, Th-232, Sr-90, Ra-223, Ra-224, U-232, I-126, I-131, I-133	1000 dpm/100 cm^2	3000 dpm/100 cm^2	200 dpm/100 cm^2
(3)	Beta-gamma emitters (nuclides with decay modes other than alpha emission or spontaneous fission) except Sr-90 and others noted above.	5000 dpm $\beta\gamma$/100 cm^2	15,000 dpm $\beta\gamma$/100 cm^2	1000 dpm $\beta\gamma$/100 cm^2

NORMAL SITE LIMITS

<100 maximum counts per minute greater than background with an alpha survey instrument.

<100 average counts per minute greater than background with a pancake G-M probe count rate meter.

<300 maximum counts per minute greater than background with a pancake G-M probe count rate meter.

<20 dpm/100 cm^2 removable alpha

<100 dpm/100 cm^2 removable beta-gamma

[a]Where surface contamination by both alpha- and beta-gamma-emitting nuclides exists, the limits established for alpha- and beta-gamma-emitting nuclides should apply independently.

[b]As used in this table, dpm (disintegrations per minute) means the rate of emission by radioactive material as determined by correcting the counts per minute observed by an appropriate detector for background, efficiency, and geometric factors associated with the instrumentation.

[c]Measurements of average contaminant should not be averaged over more than 1 square meter. For objects of less surface area, the average should be derived for each such object.

[d]The maximum contamination level applies to an area of not more than 100 cm^2.

[e]The amount of removable radioactive material per 100 cm^2 of surface area should be determined by wiping that area with dry filter or soft absorbent paper, applying moderate pressure, and assessing the amount of radioactive material on the wipe with an appropriate instrument of known efficiency. When removable contamination on objects of less surface area is determined, the pertinent levels should be reduced proportionally and the entire surface should be wiped.

(1) Level 1 Limits

(2) Level 2 Limits

(3) Level 3 Limits

ATTACHMENT B

FMPC
OPERATIONS SAFETY & HEALTH - RADIOLOGICAL SAFETY
RADIOLOGICAL SURVEY REPORT

Date:	LOCATION:	RWP:	Page of
Time:	LEVEL:		

REASON FOR SURVEY: ☐ ROUTINE ☐ SPECIAL REQUEST ☐ RWP ☐ INCIDENT

COMMENTS:

INSTRUMENTS				
MODEL	SERIAL NUMBER	CALIBRATION DATE	BKRD.	EFF.

ANALYZE FOR: ☐ ALPHA ☐ BETA-GAMMA ☐ OTHER _____

TYPE OF SURVEY: ☐ CONTAMINATION ☐ RADIATION ☐ OTHER _____

FOLLOW-UP SURVEY ATTACHED ☐YES ☐NO
SURVEY MAP ATTACHED ☐YES ☐NO

ITEM NUMBER	GRID COORDINATES	DESCRIPTION	CORRECTED DOSE RATE (mRem/hr)				DPM ALPHA		DPM BETA-GAMMA	
			γ	β/γ	γ	β/γ				
			CONTACT	CONTACT	3 FT.	3 FT.	100 CM²	PROBE	100 CM²	PROBE

NO.	DISTRIBUTION OF COPIES
1	Radiological Safety Technician Supervisor
2	Radiological Safety Engineer
3	Facility Supervisor

NOTIFICATION OF SURVEY RESULTS					
SUPERVISOR NOTIFIED	TIME	DATE	NOTIFIED BY	REVIEWED BY	DATE

FMPC-0884-1 (REV. 10/92)

ATTACHMENT C

FMPC
IRS&T

Article Surveyed

DESCRIPTION:

ALPHA	BETA-GAMMA
Fixed & Removable: dpm/frisk	Fixed & Removable: dpm/frisk
Removable: dpm/100 cm²	Removable: dpm/100 cm²

COMMENTS:

DATE: TIME:

RST (PRINTED):

RST (SIGNATURE):

FMPC-IRS&T-1546 (1/15/90)

ATTACHMENT D

C A U T I O N

RADIOACTIVE MATERIAL

ACCOUNTABILITY NO. _____ OR ☐ NONE REQUIRED

DESCRIPTION OF MATERIAL

CONTAMINATION DATA

SURFACE CONTAMINATION ON MATERIAL

Beta-Gamma _____ DPM/100 cm2

Alpha _____ DPM/100 cm2

RADIATION DATA

SURFACE DOSE RATE

_____ mrem/hr

ESTIMATED CURIE CONTENT

_____ millicuries

SPECIAL INSTRUCTIONS

SIGNED	DATE

C A U T I O N

RADIOACTIVE MATERIAL

D. A. SERVICES, INC.

Form RM 1-Rev. 2-Std. Ptg. Co.

ATTACHMENT E

FMPC

EQUIPMENT AND MATERIAL PASS

PRESENT TO RADIOLOGICAL SAFETY TECHNICIAN AT EXIT

COMPANY:

LOCATION OF WORK OR MATERIAL STAGING AREA:

DESCRIPTION OF EQUIPMENT AND MATERIAL:

Material may be released as per SP-P-35-010.

[redacted]

ATTACHMENT F

FMPC

CERTIFICATION
FOR CONTAMINATED ITEMS WITHHELD

ITEM	DISPOSITION

ISSUE AND REVISION RECORD

DATE OF CHANGE	REVISION NUMBER	AFFECTED PAGES	REASON FOR CHANGE
10/25/88	0		Original issue of procedure.
11/17/88	1	1&2	To correct limits for unrestricted release.
3/13/90	2	All	To assign limits for unrestricted release based on radioisotopic data.

Westinghouse Materials Company of Ohio — FMPC

SITE POLICY AND PROCEDURE

NUMBER:	REVISION:	ISSUE DATE:
FMPC-303	0	2/15/89

TITLE: 2344

MANAGEMENT OF GOVERNMENT PROPERTY

APPROVED BY: M. B. Boswell, President

1.0 POLICY

Westinghouse Materials Company of Ohio (WMCO) shall maintain a property management system for the control of Government-owned property at the Feed Materials Production Center (FMPC).

2.0 SCOPE

This procedure identifies the responsibilities and requirements of the property management system which includes the acquisition, receipt, maintenance, utilization, protection, storage, subcontractor/vendor control, inventory, disposition, movement and removal of non-nuclear Government-owned property at the FMPC.

3.0 DEFINITIONS

3.1 Property Management - Administration and control of physical assets including real and personal property of every kind and description with the exception of nuclear materials, which is covered in FMPC-307, "Control and Accountability of Nuclear Materials."

3.2 Government Property - Real or personal property furnished by the Government or acquired by WMCO and/or its subcontractors for use in conducting DOE programs, e.g., buildings, improvements, facilities, equipment, computer equipment/software, tools, materials, supplies, radiation sources, etc.

3.3 Real Property - Buildings, land, and land improvements.

3.4 Personal Property - For the purpose of this procedure, all property, including rented or leased equipment, provided at Government expense for performance of the contract, regardless of the method by which it is provided, except real property, nuclear and source materials, and by-product materials.

3.5 Radiation Sources - Equipment or devices which generate radiation or contain radioactive material which are manufactured or produced primarily to provide a radiation flux or field. Such sources include: fixed or portable X-Ray machines, and radioactive sources used for laboratory standards, instrument calibration and testing or checking, and non-destructive testing. Control of sources is covered in FMPC-2084, "Radiation Control Manual."

3.6 Sensitive Property - Portable assets that can be easily appropriated for private use or readily converted to cash.

3.0 DEFINITIONS (Continued)

3.7 Capital Assets - Government-owned units having a total acquisition cost of $5,000 or more and an anticipated service life of two years or longer which will not be substantially modified whereby loss of identity occurs or which will not be incorporated into other units, or are listed as retirement units in the Property Record Unit Catalog. Capital funds are classified as General Plant Projects (GPP) funds, Capital Equipment funds, Line-Items or Major System Acquisitions.

3.8 Expensed Items - Units not capitalized but instead chargeable against revenue, usually costing less than $5,000.

3.9 Major Item of Equipment - Any equipment project costing one million dollars or more (acquisition plus installation) that is funded from the capital-equipment-not-related-to-construction portion of the plant and capital equipment budget and that involves installation costs of over two hundred fifty thousand dollars ($250,000).

3.10 General Plant Projects - Construction-type projects costing $1.2 million and less.

3.11 Property Line Items - Construction-type projects or items costing in excess of $1.2 million.

3.12 Computer Equipment - All general purpose automatic data processing equipment (including computers-personal and portable) which is used for business, scientific and engineering work; including data acquisition, data reduction and process control; word and text processing; personal computing; computer-aided design, engineering and manufacturing application. General purpose automatic data processing equipment that is integrally embedded within the instrumentation, such as automatic data processing equipment acquired as part of a fire-alarm system, is not considered computer equipment.

3.13 Nuclear Materials - At the FMPC refers to uranium and thorium.

3.14 Excess Property - Government property assigned to WMCO which is no longer required for the FMPC's needs and therefore is available to other DOE Government facilities or for sale to a private merchant.

3.15 Abandoned-In-Place Property - Property that has no commercial material value or where the estimated cost of its continued care and handling would exceed the estimated proceeds from its sale. This classification requires DOE approval.

3.16 Salvage Items - Property that has some value in excess of its material content, e.g., usable parts, but which is in such condition that it has no reasonable prospect of use for any purpose as a unit, either by the DOE or in other Federal Agencies, and its repair or rehabilitation is impracticable.

3.0 DEFINITIONS (Continued)

3.17 Scrap Materials - Property that is no longer economical to use or repair, has no parts that are economical to recover and its only value is in its basic material content.

3.18 Surplus Property - Any excess property that is no longer needed by the FMPC or any other Government facility or the DOE, i.e., excess that has been completely circularized.

3.19 Plant and Equipment Classified as Held for Future Projects - All personal property that is retained for a known future project or for a potential use based on approved economic or programmatic justification. Justification is to be documented specifying the future project.

3.20 Plant and Equipment Classified as In-Standby - Personal property including capital equipment as well as Stores items which is neither currently in use nor declared excess and for which there is a potential for future use. Property to be declared as In-Standby should be identified as significant segments of Plant and Equipment, such as a complete plant or section of a plant.

3.21 Purchase Request (Form FMPC-SAML-2126) - Requisition/Purchase Order form used at the FMPC to request that Procurement make arrangements to obtain item(s) required. Guidelines for completing this form are contained in FMPC-302.

3.22 Work Request/Order (Form PRO-2532) - Form used to obtain authorization to expend funds for projects which are performed by Maintenance personnel or installation of equipment costing up to $150,000.

3.23 Idea Letter - The preliminary presentation to reviewing authorities of a proposal to purchase new capital assets based on the general merit and promise resulting from the purchase.

3.24 Project Authorization (Form T-584) - The document, referred to as a PA, which describes a proposed project and requests approval for engineering assistance. Requires DOE approval if cost exceeds $150,000.

3.25 Miscellaneous Capital Acquisition (Form CONT-924) - The document which is used to obtain authorization to procure portable capital equipment with a total estimated cost of $150,000 or less.

3.26 Request and Approval for Equipment, Maintenance and Experimental Projects (Form OR-5190) - The document which is used to obtain approval for equipment projects, extraordinary maintenance projects, and experimental projects that have an estimated gross cost in excess of $150,000.

3.0 DEFINITIONS (Continued)

3.27 SPMR-Sensitive Property Memorandum Receipt (Form CONT-124) - Form that records the issuance of sensitive property to an employee for the duration of his or her employment, or for a long-term period. Loans or transfers of sensitive property from one department to another also require the use of a memorandum receipt.

3.28 Property Disposal Request (Form FMPC-CONT-563) - The form required whenever government property is to be disposed of as excess, salvage or scrap.

3.29 Property Reclassification Request (Form FMPC-CONT-2385) - The form used to change the classification of equipment; not used to dispose of excess property.

3.30 "A" Stores Items - Material controlled by Inventory Control & Warehousing (IC&W) which may be used by various departments, e.g., office supplies, hardware, safety equipment and spare parts.

3.31 "B" Stores Items - Materials controlled by IC&W which are used in production processes to make FMPC final product, e.g., magnesium, chemicals and graphite molds.

3.32 Maintenance Manager and Inventory Control System (MMICS) - The computer record keeping system for control of Government property acquired and maintained.

3.33 Loaned Personal Property Agreement (Form FMPC-CONT-17) - The form that is required for all loans of Government property to individuals, firms, Government agencies, etc.

3.34 Non-Fund Costs - Undepreciated cost of an asset. This cost must be considered in the estimates of projects for the determination of approval levels. Normally, these costs are for reused equipment on-site or from another DOE location, not administrative transfers.

4.0 RESPONSIBILITY

4.1 WMCO Employees - Responsible for the care, protection, and control of Government property issued to them or in their possession, consistent with the requirements of this procedure.

4.2 Staff Manager - Responsible for the acquisition, use, maintenance and disposition of Government-owned materials and equipment needed to accomplish departmental tasks. Also responsible for implementing the requirements necessary to protect and maintain accountability over the department's capital assets, sensitive property (durable or consumable), precious metals, excess, scrap, salvage, etc. Appoints an individual(s) to serve as the department's sensitive item administrator and/or property custodian.

4.3 Controller - Responsible for Property Management functions performed by employees in Property, Project Budgeting and Analysis, Accounting, and Information Systems.

4.0 RESPONSIBILITY (Continued)

4.4 Property Custodian (Referred to as Custodian) - Responsible for acquiring, receiving, labeling or bar coding, and accounting for sensitive and capital property in his or her area of responsibility; providing inventory assistance; arranging maintenance as required; identifying excess equipment; notifying Property of changes in equipment status, and verifying that Government property in the possession of terminating employees is returned or accounted for prior to clearance for final pay.

4.5 Property-General Accounting Section (Referred to as Property) - Responsible for reviewing all documents pertaining to the purchase of Government property and equipment; tagging accountable items; maintaining records of Government property acquired, maintained and disposed of; accumulating costs and closing capital projects; and directing and verifying physical inventories of Government-owned property.

4.6 Sensitive Property Administrator (Referred to as SPA) - Appointed by the Staff Manager and given the responsibility for the control and accountability of sensitive property within his or her department. Approves (or disapproves) Clearance for Final Pay Form.

4.7 Safeguards and Security - Maintains controls to prevent theft and/or abuse of Government property. Requires properly authorized documentation to remove Government property from the FMPC.

4.8 Inventory Control and Warehousing (Referred to as IC&W) - Responsible for Government property receiving, stocking, storing, warehousing, excessing, disposing, and inventorying. Maintains an inventory of both "A" and "B" Stores items and issues items to authorized personnel.

4.9 Procurement/Contracts (Referred to as Purchasing) - Responsible for processing requisitions and bids, awarding of purchase orders, obtaining Government property, and documenting the follow of material on loan or shipped to subcontractors.

4.10 Excess and Disposal Coordinator (Referred to as E&DC) - Reviews Property Disposal Requests and insures all related procedures are carried out.

4.11 Information Systems - Reviews all purchase requisitions for the purchase of computers, software and related equipment to insure that item(s) meet FMPC approved standards and that necessary approvals have been obtained.

4.12 Computer Protection Program Manager (CPPM) - Responsible for the control and protection of all computer equipment and software regardless of origin.

4.13 Project Budgeting and Analysis (Referred to as PB&A) - Reviews all capital authorization documents to assure funds are available in the capital budget and all necessary approvals have been obtained.

4.0 RESPONSIBILITY (Continued)

4.14 Transportation and Materials Management (Referred to as Transportation) - Requests or approves requests for all motor vehicles. Maintains these items and disposes of them as necessary. Delivers materials from Receiving to the requisitioner.

4.15 Receiving Subsection of the Transportation Section of the SAML Department (Referred to as Receiving) - Takes possession of Government property upon receipt. Verifies the quantities and condition of item(s) received. Records any apparent damage or shortage and notifies the requisitioning source of any discrepancies.

4.16 Quality Assurance (QA) - Reviews purchase requisitions, inspects select items upon receipt, releases material to the Warehouse, and surveys and audits the management controls over procurement, handling and storage of personal property.

4.17 Human Resources - Verifies that Clearance for Final Pay, Form HR-560, Attachment A, has been signed by the terminating employee's Manager, indicating that all Government property in the possession of the employee is returned or accounted for prior to clearance for final pay.

4.18 Maintenance Section of Production Operations (Referred to as Maintenance) - Responsible for maintaining Government property in good condition and documenting actions in the maintenance schedule file referred to as MMICS.

5.0 GENERAL

5.1 The FMPC is Government-Owned and Contractor-Operated (GOCO). The entire array of buildings and other structures, facilities, machines, equipment, instruments, tools, materials and supplies which support operations at the FMPC has been supplied by the Government for use at the site. WMCO, under its prime contract with the DOE, functions in accordance with sound industrial practice, generally accepted accounting principles and Federal statutes and regulations.

5.2 This procedure provides property management direction to WMCO Managers, Property personnel, custodians, construction contractors and all employees at the FMPC with respect to functions outlined in Section 6.0: 6.1 Acquisition, 6.2 Receipt, 6.3 Maintenance, 6.4 Utilization, 6.5 Protection, 6.6 Storage, 6.7 Subcontract/ Vendor Control, 6.8 Inventories, 6.9 Movement and Removal, 6.10 Off-Site Property and 6.11 Disposition of Government Property.

5.3 Upon an employee's termination, the employee shall turn in all Government property for which he or she is responsible and obtain the signature of the SPA on the terminating employee form for all applicable sensitive items. The terminating employee's manager shall also sign the termination form verifying that all other Government property has been returned.

6.0 PROCEDURE

6.1 Acquisition of Government Property - Items of property are required for many reasons, e.g., to support newly authorized programs or projects, to expand existing activities, to replace worn-out or obsolete facilities and equipment, or to replenish consumable items.

Government property can be obtained from many sources. Some of the potential sources are: IC&W, storage, idle equipment, excess, transfers from other facilities or Government sources, loans, leases, rentals, or purchases.

WMCO Managers and Custodians have a responsibility to ensure that reviews aimed at acquiring needed property from alternative sources are conducted prior to resorting to new purchases. QA's review of all purchase requisitions is required.

RESPONSIBILITY	ACTION
INITIATOR	A. Identifies the need for facilities, equipment, materials, spare parts or supplies.
	B. Determines if item(s) is available at this site, in inventory or excess, or with the help of Purchasing can be obtained from the DOE or another Government facility.
	C. Arranges with Purchasing and Property personnel to acquire available Government-owned facilities, equipment or materials.
	D. Considers renting or leasing equipment as an alternative to purchasing. Discusses the alternatives with Purchasing.
	E. Prepares a Purchase Request; obtains Staff Manager's and, if renting or leasing, the Controller's approval.
	F. Takes actions accordingly to acquire excess property or to purchase item(s), depending on cost and whether the required item is capital equipment or expense items.
	G. Indicates on purchase requisition if item to be purchased is a sensitive item.

6.0 PROCEDURE (Continued)

6.1 Acquisition of Government Property - (Continued)

6.1.1 Purchase of Capital Equipment

RESPONSIBILITY	ACTION
INITIATOR	A. Prepares the appropriate form(s) for authorization to purchase capital equipment, general plant project or major equipment, based on the purchase price of the unit(s) and the cost of labor necessary to install, if any.

NOTE: Refer to Sections 8.0 "Forms Used" and 4.0 "Definitions" of this procedure to determine which form or forms to use.

	B. Requests approval to purchase new capital assets of portable units (non-installed) costing $150,000 and less by preparing form CONT-924 "Miscellaneous Capital Acquisition", Attachment B, and Purchase Request.
	C. Purchases new capital units requiring installation and/or removal from service of capital units, by preparing form T-584 "Project Authorization", Attachment C) or form PRO-2532 "FMPC Work Request/Order", Attachment D, and a Purchase Request.
	D. Contacts the Staff Manager to assure that capital equipment desired is included on the current fiscal year's list of proposed capital items. Any item needed but not budgeted for shall be brought to the attention of the responsible manager.
STAFF MANAGER	E. Determines the merit of the proposal and assures funds are available. Approves or disapproves proposal.
INFORMATION SYSTEMS	F. Receives and reviews all forms requesting computer equipment and software.

6.0 PROCEDURE (Continued)

6.1 Acquisition of Government Property (Continued)

6.1.1 Purchase of Capital Equipment (Continued)

RESPONSIBILITY	ACTION
TRANSPORTATION	G. Receives and reviews all requests for motor vehicles.
PROPERTY	H. Receives and reviews all documents requesting any type of capital equipment to ensure that the unit(s) meets the criteria for capital equipment described in the Property Record Unit Catalog. Forwards documents to the Capital Projects Manager after obtaining required approval.

NOTE: Refer to Attachment E, "Type of Projects Needing Project Authorization (PA) Approval," for a schedule of approvals required for specific dollar levels for the various types of funding.

PB&A	I. Receives and reviews all documents requesting capital equipment; ensures that funds are available in the capital budget by contacting Engineering Managers of equipment and GPP funds.
PURCHASING	J. Receives all Purchase Requests and Miscellaneous Capital Acquisitions and enters them into the Procurement process.

6.1.2 Purchase of Expensed Items

INITIATOR	A. Determines if item(s) is available in IC&W inventory. Submits an approved "Requisition to Storekeeper" form SAML-13, Attachment F, to IC&W to obtain parts, materials or other items from WMCO's inventory.
	B. Orders high usage office supplies available in-house by preparing Requisition Form SAML-2906, Attachment G.

6.0 PROCEDURE (Continued)

6.1 Acquisition of Government Property (Continued)

6.1.2 Purchase of Expensed Items (Continued)

RESPONSIBILITY	ACTION
INITIATOR	C. Arranges for items to be added to IC&W's inventory by submitting an approved form SAML-105 "Request for New Inventory Item", Attachment H, to IC&W for processing.
	D. Identifies the need to change the ordering pattern or the specification of an existing stock item or recognizes a stock item is no longer needed. Completes form SAML-1733 "Request for Change of Stock Status", Attachment I, and submits the approved form to IC&W.
	E. Submits form SAML-83 "Material Commitment Form", Attachment J, to IC&W recognizing a larger than usual need for a particular stock item, e.g., an unusually large project.
IC&W	F. Processes all documents requesting items from IC&W's inventory. Maintains accurate and timely records of IC&W inventory via the MMICS.
INITIATOR	G. Acquires expensed items not available in IC&W's inventory by preparing a purchase request; after obtaining authorization approval, submits request to Purchasing for processing.
PROPERTY	H. Receives and reviews requests for purchase of expensed items, including items obtained through IC&W.
PURCHASING	I. Receives all requests for purchase of expensed items; processes into the Procurement system.

6.0 PROCEDURE (Continued)

6.1 Acquisition of Government Property (Continued)

6.1.3 Obtaining Excessed or Abandoned Government Property

RESPONSIBILITY	ACTION
INITIATOR	A. Prepares form CONT-2385 "Property Reclassification Request", Attachment K, to withdraw materials or equipment from "Abandoned-in-place" (requires DOE's approval) or "Excess."
	B. Coordinates transfers with the E&DC, the Custodian, Property, and representative from the department possessing the desired item(s).

6.2 Receipt of Government Property

WMCO shall initiate management control of Government-owned property at the time of its receipt at WMCO from the source of acquisition. Specific responsibility for custodial control of property rests with the manager of the organization who receives the property for use.

IC&W	A. Verifies incoming materials or equipment, confirms the accuracy of shipping papers and checks for obvious omissions or physical damage.
	B. For Quality Levels 1 & 2 items, provides QA with a copy of receiving documents, certifications, conformance statements, records and other quality related data received from the supplier.
QA	C. Where receiving inspection is specified on the purchase requisition, inspects specific incoming items, documents the inspection and then releases the items to IC&W.
IC&W	D. Investigates missing and/or damaged items received. Contacts Purchasing to get discrepancies or other problems with the supplier resolved.

6.0 PROCEDURE (Continued)

6.2 Receipt of Government Property (Continued)

RESPONSIBILITY	ACTION
IC&W	E. Forwards receiving data to Property and the requisitioner. Includes serial numbers if applicable.
	F. Expedites delivery of sensitive items, including precious metals to the applicable property custodian. Delivers or arranges delivery of supplies or other items received to the requesting department.
CUSTODIAN and/or SPA	G. Recognizes receipts of sensitive property by preparing form FMPC-CONT-124 "Sensitive Property Memorandum Receipt", Attachment L Obtains signature of employee charged with the responsibility for the item(s).
PROPERTY	H. Catalogs items and maintains a central control record system for all FMPC capital and sensitive property, making sure all property is numbered and marked "U.S. Government Property." Provides tags to custodians/SPA.
CUSTODIAN and/or SPA	I. Tags, bar codes or applies some other identifying marks to Government-owned property other than IC&W items and expense items acquired through Purchasing.
IC&W	J. Stocks and maintains the IC&W inventory.
	K. Creates property records into the MMICS by preparing form SAML-105, "Request for New Inventory Item."

6.3 Maintenance of Government Property

Government owned facilities and equipment shall be maintained in good operating condition in order to effectively perform its intended functions in accordance with Federal and DOE Property Management Regulations and sound business practices. Government equipment shall be kept in good condition through a program of preventive maintenance, calibration or by other means as is applicable to each particular item.

6.0 PROCEDURE (Continued)

6.3 Maintenance of Government Property (Continued)

RESPONSIBILITY	ACTION
IC&W	A. Forwards manufacturer's recommendations and specifications to Maintenance so that maintenance schedules can be established.
MAINTENANCE	B. Identifies item(s) requiring preventative maintenance and/or calibration and establishes service frequencies.
	C. Services the property and documents the actions taken in the MMICS where cost are accumulated for each unit.
	D. Maintains a computerized preventative maintenance schedule and a maintenance history of equipment included in the program.
	E. Attaches special tags to the equipment for identification and maintenance purposes.
CUSTODIAN and/or SPA	F. Arranges for repairs to Government property including items under warranty, and items for which maintenance policies have been purchased.
INFORMATION SYSTEMS	G. Arranges for maintenance and repairs of computer equipment.

6.4 Utilization of Government Property

Maximum asset utilization at a minimum investment is an objective of WMCO management. Each WMCO organization unit is responsible for carrying out the property management function to maximize equipment utilization.

CUSTODIAN	A. Returns unused items to IC&W and excesses unused equipment.
	B. Reports intra-plant transfers of equipment between areas, buildings or departments.

6.0 PROCEDURE (Continued)

6.4 Utilization of Government Property (Continued)

NOTE: Intra-plant transfers shall be reported to Property using Property Reclassification Request Form CONT-2385, Attachment K; Work Request/Order Form PRO-2532, Attachment D; Property Disposal Request Form CONT-563, Attachment M; or Construction Proposals.

RESPONSIBILITY	ACTION
CUSTODIAN	C. Reports to WMCO supervision the occurrences of loss, damage, or destruction of equipment.
	D. Forecasts needs for replacement and/or additional equipment.
	E. Keeps accurate property records, using listings supplied by Property.
	F. Promotes the use of Government property for official use only.
	G. Reports all occurrences of improper use, alteration, unauthorized disclosure or other improper acts of all computer equipment and software to the CPPM.

NOTE: Pending issuance (as of Jan. 1989), refer to site procedure FMPC-614 "Administrative Controls for Computer Security" for details.

	H. Optimizes property utilization.
STAFF MANAGER	I. Performs inspection tours or "Walk Throughs" at least once a year (usually in April) to promote better use of equipment and to identify property that apparently is not being used that should be considered for reassignment or removed for disposal (excess).

NOTE: Pieces of equipment that have not been used during the past year require the manager's written comments and recommendation for action to be taken, such as, transfer to "Held for Future Projects" or "Excessed". A copy of the comments for each area shall be sent to the Controller as documentation and for timely follow-up.

6.0 PROCEDURE (Continued)

6.5 Protection Of Government Property

Property protection shall be accomplished by implementation of measures to guard against accidental damage, vandalism, sabotage, theft and loss. The degree of control or effort expended to afford protection shall depend upon sensitivity, value and susceptibility to loss or damage.

RESPONSIBILITY	ACTION
PROPERTY	A. Issues periodically a site-wide guideline which list items that are to be considered sensitive. Responds to questions from WMCO managers about questionable items that should be considered for possible inclusion in the site list.
STAFF MANAGER	B. Appoints a Custodian/SPA for the department.
	C. Ensures that employees are informed of their responsibility to protect Government property.
	D. Provides facilities for safekeeping of sensitive items.
	E. Authorizes select individuals that can acquire items from IC&W. (Re. FMPC-104 "Signature Authority")
	F. Approves (or disapproves) Purchase Requests or gives this authority to a designee. (Re. FMPC-104 "Signature Authority")
CUSTODIAN/SPA	G. Prepares form CONT-124, "Sensitive Property Memorandum Receipt," (Attachment L) as a record of sensitive property and who has custody of the item(s). Maintains property records.
	H. Monitors usage rates of sensitive items to ensure such usage is consistent with operating requirements and to detect indications of misappropriation.

6.0 PROCEDURE (Continued)

6.5 Protection Of Government Property (Continued)

RESPONSIBILITY	ACTION
CUSTODIAN	I. Upon notification by Property, performs physical inventories to verify that all capital and/or sensitive property items, for which he or she is responsible, are accounted for. Determines if inventory items are listed on SPMR's and in the possession of the employees to whom the item(s) was assigned.
	J. Records any lost, damaged or stolen item(s); reports findings to staff manager; and replaces the missing item(s) as needed. Reports stolen items to Security, Property, and WMCO Internal Audit. Contacts the CPPM if computer equipment/software is involved.
CUSTODIAN/SPA	K. Writes a letter to the Controller verifying the taking of the physical inventories and reporting any missing, damaged or stolen item(s).
CONTROLLER	L. Requests a site-wide review by Custodians for any items that are reported missing.
	M. Reports to the DOE any missing property items.
CUSTODIAN/SPA	N. Upon termination of employment of a person possessing Government property, recalls and accounts for all items issued to the terminating employee. Upon verification of these items, approves "Clearance For Final Pay," Attachment A.

NOTE: Items determined to be missing upon termination of employment are handled as in 6.5 M.

SAFEGUARDS & SECURITY	O. Displays signs in various areas on site to keep employees informed of the seriousness of taking or abusing government property.

6.0 PROCEDURE (Continued)

6.5 Protection Of Government Property (Continued)

RESPONSIBILITY	ACTION
SAFEGUARDS & SECURITY	P. Conducts periodic inspections of lunch boxes, briefcases and other packages removed from site to make employees aware of the ongoing efforts to control government property.

NOTE: Refer to Section 6.9 of this procedure for instructions covering the removal of Government Property from the site.

6.6 Storage of Government Property

Equipment assigned to WMCO which does not have immediate application may be retained in storage, under controlled conditions, in anticipation of future project use. Materials and supplies are also to be stored and controlled considering the potential urgency of demand, ordering/usage pattern economics, scarcity of supply, availability from surplus at reduced costs, etc.

IC&W	A. Requires that all stored items are adequately protected and accounted for to maintain them in good condition and ready for use when required.
	B. Periodically reviews IC&W inventory to avoid accumulation of items for which retention cannot be justified.
CUSTODIAN/SPA	C. Identifies property items in his or her custody which are not in current use and determines if retention can be justified.
	D. Provides Property with details of unused items to be retained in storage or for which disposition shall be changed.
PROPERTY	E. Reviews justification of item retention.
	F. Retains records of items in storage and provides listings for management review and rejustification for retention of items classified as "Standby" and "Equipment Held for Future Use."

6.0 PROCEDURE (Continued)

6.6 Storage of Government Property (Continued)

RESPONSIBILITY	ACTION
CUSTODIAN	G. Ensures compliance with safe storage practices in areas under their cognizance.
PROPERTY	H. Observes operation of storage facilities during walk throughs and storage reviews to confirm compliance with DOE regulations. Reports results to WMCO management.
	I. Updates information in WMCO property records to correctly reflect the location and status of stored items.

6.7 Subcontractor/Vendor Control

Government-owned property acquired or furnished by WMCO but in the possession of subcontractors or vendors, both on-site and off-site, shall be protected and controlled in the best interest of the Government. WMCO is responsible for ensuring that this property is managed in accordance with Federal and DOE Property Management Regulations.

PURCHASING	A. Places contracts with subcontractors and vendors to provide materials, equipment and services for WMCO in support of FMPC projects and programs.
	B. Ensures that contracts are written to identify Government-owned property to be provided and dates when property is the responsibility of the subcontractor or vendor.
	C. When Government property is loaned to subcontractors/vendors on a purchase order/subcontract, ensures that a Form FMPC-SAML-871, "Miscellaneous Shipping Order (MSO)", Attachment N and/or Form FMPC-CONT-17, "Loaned Personal Property Agreement," Attachment O, is completed, approved, and a copy given to Property prior to the equipment being shipped to the subcontractor/vendor.

6.0 PROCEDURE (Continued)

6.7 Subcontractor/Vendor Control (Continued)

RESPONSIBILITY	ACTION
PURCHASING	D. Requires subcontractor/vendor to keep Government-owned property separate from supplier-owned property and to protect and maintain Government-owned property in their possession.

NOTE: Depending on the length of possession, subcontractors and/or vendors may be required to supply physical inventory data and verification that they still have the Government equipment assigned to them.

	E. Requires a final inventory of property in conjunction with contract close-out.
PROPERTY/PURCHASING	F. Maintains property records of items purchased for or provided subcontractor/vendor by WMCO.
PURCHASING	G. Reviews and approves subcontractor/vendor performance in management of Government-owned property in their possession.

6.8 Inventories of Government Property

WMCO is responsible under its prime contract with DOE to manage Government-owned property assigned to the FMPC. This includes physically inventorying equipment and facilities assigned to the site. The Controller's Manual provides the requirements for inventories of Plant and Equipment. This procedure does not cover the inventorying of stores or expense items (MMICS provides control over these items).

NOTE: Sensitive items are inventoried annually; movable plant and equipment are inventoried every two years; installed equipment is inventoried every five years; and permanently affixed equipment is inventoried every ten years.

PROPERTY	A. Sends inventory letter of instructions to Custodians specifying what is to be inventoried and the date by which the inventory is to be completed.

6.0 PROCEDURE (Continued)

6.8 Inventories of Government Property (Continued)

RESPONSIBILITY	ACTION
CUSTODIAN/SPA	B. Takes physical inventories as required.
PROPERTY	C. Reviews inventory listings and test checks at least ten percent of the units and dollar value of items inventoried.
	D. Reconciles the inventory with Property equipment records. Missing items are listed as write-offs; items on inventory but not on record are listed as write-ons.
	E. Orchestrates a plant-wide search for missing items.
CONTROLLER	F. Reports to the DOE (site office and ORO - Chief of Property Management) all adjustments.

6.9 Movement and Removal of Government Property

All movements, either on-site or off-site, shall require documentation and be reported to Property. On-site movement or transfers of property are included in Section 6.4B. Government-owned property shall be removed from the site by employees or subcontractors, for official use only, upon receipt of the proper approvals.

6.9.1 Removal of Property by WMCO Employees & FMPC DOE Personnel

(a) WMCO Temporary Off-Site Property Removal Authorization, FMPC-CONT-3013, (See Attachment P) - This form (pass) is required for WMCO employees and site DOE personnel to remove Government property from the site. The form requires the approval of a WMCO authorized manager (Refer to FMPC-104 "Signature Authorization") or FMPC DOE Management personnel, whoever is appropriate, and Property. The removal of computer equipment requires the approval of the Computer Protection Program Manager (CPPM). A pass is valid for a period not to exceed 14 calendar days from the approval date of the pass. The person removing the Government property from the site is required to complete the pass by providing a description of the items to be removed and the date the item(s) will be returned.

6.0 PROCEDURE (Continued)

6.9 Movement and Removal of Government Property (Continued)

6.9.1 Removal of Property by WMCO employees and DOE Site Personnel (Continued)

(a) FMPC-CONT-3013 (Continued)

NOTE: FMPC-CONT-3013 is a one time only pass and is not reuseable.

RESPONSIBILITY	ACTION
BORROWER	A. Prepares pass and obtains necessary signatures of approval.
	B. Presents approved pass, along with the Government property, to the Security Officer for inspection at the time the property is being removed from the FMPC.
SECURITY OFFICER	C. Checks item(s) with the property description on the pass and assures the proper approvals have been obtained. Removes copies #1 and #2 of the pass; forwards to the authorizing source and to Property, respectively.
BORROWER	D. Retains remaining copies of pass until property is returned. Upon return, presents pass along with the removed items for verification to the Security Officer.
SECURITY OFFICER	E. Assures property returned agrees with what stated on the pass. Signs pass and removes copy #3; copy #4 is retained by the borrower. Sends #3 copy to Property.
BORROWER	F. Returns property to the appropriate location on-site.

6.0 PROCEDURE (Continued)

6.9 Movement and Removal of Government Property (Continued)

6.9.1 Removal of Property by WMCO Employees and Doe Site Personnel (Continued)

(b) WMCO Property Recurring Removals Pass, FMPC-CONT-3014 (See Attachment Q) - This pass is issued by Property to WMCO employees and site DOE personnel who need to remove Government portable property on a recurring basis in the performance of their work duties. Only after the authorized WMCO Manager or site DOE Manager has approved the temporary pass, FMPC-CONT-3013, can the employee receive the recurring pass. These passes are issued for a period not to exceed one year and are cancelled as of the expiration date shown on the pass. Only items listed on the pass are permitted to be removed from the site.

RESPONSIBILITY	ACTION
BORROWER	A. Completes form FMPC-CONT-3013 and obtains the indicated necessary signatures of approval.
	B. Sends approved form to Property.
PROPERTY	C. Reviews request for recurring pass. If acceptable, prepares pass and sends to employee (borrower). If denied, notifies employee and provides reason for denial.
BORROWER	D. Shows pass, along with property being removed or returned, to Security Officer.

NOTES: To remove Government property from areas outside the FMPC Security perimeter, such as, the Human Resource Building or the Fairfield Office, and in the absence of a Security Officer, the authorized WMCO manager who approves the pass shall be responsible for property removed and returned and for signing and distributing copies removed from the pass.

Miscellaneous shipping orders (MSOs) are not necessary when passes are used to remove Government property from the FMPC.

Terminating WMCO employees and DOE personnel, having possession of Government property, shall be responsible for returning all property and property passes to WMCO prior to termination.

6.0 PROCEDURE (Continued)

6.9 Movement and Removal of Government Property

6.9.2 Removal of Government Property to Vendors, Subcontractors other DOE Installations, and Government Agencies

(a) Miscellaneous Shipping Order(MSO), FMPC-SAML-871, (See Attachment N) - This form is used to ship Government property from the site. MSOs shall include the following information: description of item(s), tag/bar code number, serial/model number, manufacturer's name, estimated value of property, expected return date, applicable purchase order or subcontract number, reason for shipment, etc.

RESPONSIBILITY	ACTION
INITIATOR	A. Prepares MSO, obtains management approval, and delivers form to Property.
PROPERTY	B. Reviews and approves form insuring the information, relative to the property, is complete.
INITIATOR	C. Delivers form to Purchasing.
PURCHASING	D. Reviews and approves form insuring that the purchase order/subcontract agree with the information on the MSO.
INITIATOR	E. Takes MSO and property to Receiving.
RECEIVING	F. Assigns MSO number to the form.
	G. Makes distribution of copies of MSO. Gives two copies to the shipper for security verification upon exit from the plant.
SECURITY	H. Checks vehicle exiting the plant to ensure that only documented (MSO) equipment is being taken.
	I. Signs pink copy of MSO and forwards it to Property.

6.0 PROCEDURE (Continued)

6.9 Movement and Removal of Government Property

6.9.2 Removal of Government Property to Vendors, Subcontractors, Other DOE Installations, and Government Agencies (Continued)

(b) Loaned Personal Property, FMPC-CONT-17, (See Attachment O) - This form is required for all property on loan for more than sixty days to a vendor/subcontractor and for all loans to other DOE installations or Government Agencies.

RESPONSIBILITY	ACTION
INITIATOR	A. Completes form FMPC-CONT-17 and obtains all necessary approvals, including DOE approval if the loan is not covered under a purchase order or subcontract.
PURCHASING	B. Ensures that for each purchase order or subcontract that agrees to the loan of Government property there is an approved "Loaned Personal Property Agreement." Forwards a copy of the completed form to Property.
PROPERTY	C. Notifies the vendor/subcontractor of the need to inventory annually the Government property in their possession and to submit the inventory list to WMCO.
	D. Verifies the inventory list against WMCO Property records to ensure all items are accounted for.
PURCHASING	E. Ensures with Property that all Government property is returned prior to the close-out of the purchase order/subcontract.

NOTE: A "Package and Briefcase Pass", form FMPC-SAML-339 (Attachment R), shall be prepared by an employee bringing on-site or taking from the site employee-owned property that could be confused with Government Property. Also, all vendor equipment/materials brought on-site or taken from the site needs to be documented on a briefcase pass. If the material that the employee or vendor brings on-site or takes from the site is computer equipment or software, the CPPM needs to have co-approved the pass prior to the action taking place.

6.0 PROCEDURE (Continued)

6.10 Control of Property at Off-Site Locations

FMPC Goverment property that is located at another facility or at a WMCO off-site office shall be marked "U. S. Government Property" and tagged for control purposes as outlined in Section 6.2 of this procedure.

RESPONSIBILITY	ACTION
CUSTODIAN	A. Inventories all sensitive and capital equipment annually and reports the inventory results to Property as detailed in Section 6.8 of this procedure.
ORIGINATOR	B. Prepares an MSO to document the receipt of Government property to be stored or used at an off-site location. (This does not include equipment/material transported by an employee for short-term use.)
	C. Contacts Radiological Safety to arrange for radiation monitoring before item(s) is shipped.
	D. Arranges, prior to shipment, with Property to have a property tag affixed to all items requiring one.
	E. Obtains the applicable Staff Manager's approval on the MSO and forwards it, along with the radiological monitoring report, to Property.
OFF-SITE OFFICE PERSONNEL	F. Receives property at the facility, completes documentation and forwards it to WMCO Receiving for input into the MMICS.
MANAGER OF OFF-SITE OFFICE	G. Ensures that MSOs are issued, receipts are documented, company property passes are used by employees and purchases orders are issued for the acquisition of property.

NOTE: All property procedures in effect at the WMCO site must be conformed to at off-site WMCO locations; this includes the documentation and notification to Property of equipment movements, security and protection of equipment, annual verification of equipment and the proper disposal of equipment no longer required.

NUMBER:	REVISION:	ISSUE DATE:
FMPC-303	0	2/15/89

6.0 PROCEDURE (Continued)

6.11 Disposition of Government Property

When items of property are no longer needed, the custodian shall take prompt disposition action in order to provide these items for use elsewhere, either at the FMPC or by another Government facility or the DOE. Disposition of equipment or material, which will not be further utilized, shall be made and documented by the custodian. Equipment in place, having no further use, which cannot be economically or easily removed shall be declared "Abandoned-In-Place" after obtaining DOE approval.

RESPONSIBILITY	ACTION
INITIATOR/MANAGER	A. Identifies property assigned to the individual or the department for which there is no further need. Notifies CPPM of all computer equipment dispositions.
	B. Determines the physical classification of the item(s), either excess, salvage or scrap.
	C. Prepares form CONT-563, "Property Disposal Request", Attachment M.
	D. Contacts the E&DC to confirm disposition and to inspect the item(s) before shipping.
	E. Assesses potential for radiation contamination; requests environmental radiological monitoring for contamination as appropriate.
	F. Prepares form CONT-2385, "Property Reclassification Request", Attachment K, to notify Property of change in physical classification of property.
	G. Coordinates with the E&DC the removals of items to the excess area, scrap pile or to a salvageable area.
IC&W	H. Reviews form CONT-563, "Property Disposal Request", Attachment M, for IC&W item(s) or available spare parts.

6.0 PROCEDURE (Continued)

6.11 Disposition of Government Property (Continued)

RESPONSIBILITY	ACTION
E&DC	I. Contacts Procurement for instructions in establishing disposition of property; arranges method of disposition.
	J. Notifies Property of changes in disposition of Government property.
	K. Arranges sale of scrap/salvage per DOE regulations with Purchasing's support in negotiations of contracts and awards. Notifies Property and Purchasing of sale.
CONTROLLER	L. Deposits funds for excess items removed from the FMPC, credits Government contract and updates the property records.
E&DC	M. Prepares form CONT 2385, "Property Reclassification Request", Attachment K, when materials or equipment are withdrawn from excess or abandoned in place for reuse or return to IC&W..
	N. Notifies Property and IC&W of reclassification to update files.
STAFF MANAGER	O. Uses excess property, to the greatest extent practicable, as the first source of supply in fulfilling WMCO requirements.

7.0 APPLICABLE DOCUMENTS

Controller's Manual
DOE Property Management Regulations - Published in the Federal Register, 52 FR 9831 (DOE-PMR)
Federal Property Management Regulations (FPMR)
Inventory Control and Warehousing Section Manual
Radiation Control Manual
Procurement Manual
Property Accounting Procedures (Manual)
FMPC-QAP-1-FMPC Quality Assurance Plan
FMPC-104, "Signature Authorization"
FMPC-302, "Request for Purchase"
FMPC-307, "Control and Accountability of Nuclear Materials"

7.0 APPLICABLE DOCUMENT (Continued)

FMPC-310, "Personal Computer Procurement"
FMPC-614, "Administrative Controls for Computer Security"
FMPC-707, "Audit Program"
FMPC-715, "FMPC Work Request System"
Oak Ridge Property Management Instructions

8.0 FORMS USED

CONT 17, "Loaned Personal Property Agreement"
CONT-124 "Sensitive Property Memorandum Receipt"
CONT-563 "Property Disposal Request"
CONT-924 "Miscellaneous Capital Acquisition"
CONT-2385 "Property Reclassification Request"
HR-560, "Clearance for Final Pay"
OR F 5190.1 "Request and Approval for Equipment, Maintenance and Experimental Projects"
PRO-2532, "FMPC Work Request/Order"
SAML-13, "Requisition to Storekeeper"
SAML-83, "Material Commitment Form - S-114"
SAML-105, "Request for New Inventory Item"
SAML-339, "Package and Brief Case Pass"
SAML-871, "Miscellaneous Shipping Order"
SAML-1733, "Request for Change of Stock Status"
SAML-2126, "Requisition/Purchase Order"
SAML-2906, "Stores Requisition"
T-584, "Project Authorization"

9.0 ATTACHMENTS

Attachment A - "Clearance for Final Pay" (HR-560)
Attachment B - "Miscellaneous Capital Acquisitions" (CONT-924)
Attachment C - "Project Authorization" (T-584)
Attachment D - "FMPC Work Request/Order" (PRO-2532)
Attachment E - "Types of Projects Needing Project Authorization Approval"
Attachment F - "Requisition to Storekeeper" (SAML-13)
Attachment G - "Requisition Form" (SAML-2906)
Attachment H - "Request for New Inventory Item" (SAML-105)
Attachment I - "Request for Change of Stock Status" (SAML-1733)
Attachment J - "Material Commitment Form - S-114" (SAML-83)
Attachment K - "Property Reclassification Request" (CONT-2385)
Attachment L - "Sensitive Property Memorandum Receipt" (CONT-124)
Attachment M - "Property Disposal Request" (CONT-563)
Attachment N - "Miscellaneous Shipping Order" (SAML-871)
Attachment O - "Loaned Personal Property Agreement" (CONT-17)
Attachment P - "WMCO Temporary Off-Site Property Removal Authorization" (CONT-3013)
Attachment Q - "WMCO Recurring Removal Pass" (CONT-3014)
Attachment R - "Package and Brief Case Pass" (SAML-339)
Attachment S - "Directive Authorization" (OR-637)
Attachment T - "Request and Approval for Equipment, Maintenance, and Experimental Projects" (OR F 5190.1)

INSTRUCTIONS: Originated by Section Head. Form (Original Only) is given to terminating employee who must clear through all of the sections listed below. Upon completion, this form is to be submitted to Employee Records, Human Resource Services.

FMPC
HUMAN RESOURCES
CLEARANCE FOR FINAL PAY

Employee: _____ Badge Number: _____

Last working day for the above named employee will actually be: _____
DATE

It is requested that the above named employee be cleared for final pay.

_____
SECTION HEAD

_____
DATE

SECTION	LOCATION	CLEARED BY	TIME IN	TIME OUT
Sensitive Property Administrator	Employee s Section SPA			
General Accounting	Administration Building East Wing - First Floor			
Computer Security	Administration Building Room 221 - Second Floor			
Records Service Center	Administration Building First Floor - West Wing			
Services	Services Building Locker Room			
Technical Library	Laboratory Building Room S-9			
Medical	OS&H Building			
Security	Guard House			
Benefits	Human Resources Building N.W. Wing			
Employee Records	Human Resources Building			
Employee Relations - Exit Interview (other than layoff or discharge)	Human Resources Building			

The above employee is cleared for final pay excepting:

	AMOUNT DUE
Badge: ☐ **Returned** ☐ **Not Returned**	$
Other (Explain): _____	
TOTAL AMOUNT TO BE DEDUCTED FROM PAY	$

Left Human Resource Services Section: _____ (TIME) _____ (DATE)

_____
MANAGER, HUMAN RESOURCE SERVICES

NO.	DISTRIBUTION OF COPIES
1	**Original to Payroll Section - when form is completed** *(RECORD COPY)*

2344

INSTRUCTIONS: See Reverse Side.

ATTACHMENT B 2344
FMPC-303, REV. 0
Issue Date: 2/15/89

Westinghouse Materials Company of Ohio
MISCELLANEOUS CAPITAL ACQUISITIONS

No. _____

(1) Date _____

(2) Item (Same quantity and description as will appear on Purchase Order.):

(3) Justification:

(4) *(For Property - Accounting Only)*
Retirement Unit Title (Use Title shown in WMCO Property Unit Catalog): _____

Accounting Charge: _____ Budget Project: _____

(5) Purchase Requisition No.: _____

(6) Estimated Cost: _____

(7) Requested by: _____ Date _____

(8) Approved by:

(a) Section Manager _____

(b) Staff Manager _____

(9) Accounting Review:

(a) Property: _____ Date _____

(b) Capital Project Manager: _____ Date _____

NO.	DISTRIBUTION OF COPIES
1	Procurement *(RECORD COPY)*
2	Budget *(RECORD COPY)*
3	Initiator

458

FMPC-CONT-924 (REV. 11/17/88)

Westinghouse Materials Company of Ohio

PROJECT AUTHORIZATION

Title _____

PA No. _____ Estimate _____

APPROVALS	SIGNATURE	DATE
Responsible Engineer		
Manager.		
Manager.		
Facility Owner		
Initiating Manager		
Vice President. and Controller		
Vice President. and Technical Director		

ATTACHMENT D
FMPC-303, REV. 0
Issue Date: 2/15/89

FMPC WORK REQUEST/ORDER

ORIGINATOR'S SECTION

2344

WORK REQUEST NUMBER

J. NO.:

A M C

REQUESTED COMP. DATE: MONTH | DAY | YEAR

TYPE OF JOB

EQUIPMENT NUMBER

EQUIPMENT NAME:

QA LEVEL: IA | IB | II | III

BUILDING | FLOOR | RM-AREA | PRIORITY 1 2 3 4

PERSONNEL SAFETY ITEM? YES | NO

FOR DETAILS ON USING THIS FORM: Refer to the Maintenance Work Order Procedure.

SAFETY SYSTEM OR DESIGN FEATURE FOR SAFETY: YES | NO

JOB TITLE:

JOB DESCRIPTION:

NAME: | INITIALS: | DATE: | PHONE:
ORIGINATOR (REQ)

SIGNATURE: | INITIALS: | DATE:
FACILITY OWNER (APV)

COST CENTER | OBJ. CL.

PLANNING SECTION

	JOB ELEMENTS	CRAFT CODE	NO.	MAN HOURS EST	MAN HOURS ACTUAL
1					
2					
3					
4					
5					
6					
7					
8					
9					
10					

OVERHEAD:	LABOR:	MATERIAL:	TAX:	TOTAL:				
ESTIMATED COSTS					PLANNER'S INITIALS	SHOP	TYPE EST	TOTALS

RETESTS:

RELEASE SECTION

FIRE AND SAFETY: SIGNATURE | DATE

QA: SIGNATURE | DATE

NUCLEAR SAFETY: SIGNATURE | DATE

ENGINEERING: SIGNATURE | DATE

HEALTH PHYSICS: SIGNATURE | DATE

RESPONSIBLE FIRST LINE SUPERVISOR: SIGNATURE | DATE

INDUSTRIAL HYGIENE: SIGNATURE | DATE

FACILITY OWNER: SIGNATURE | DATE

ENVIRONMENTAL COMPLIANCE: SIGNATURE | DATE

DAVIS-BACON DETERMINATION: YES | NO | APPLICABLE | NUMBER

B & R NUMBER: (CAPITAL ONLY)

SUBCONTRACT NUMBER: (CAPITAL ONLY)

PROJECT AUTHORIZATION: NUMBER

COMPLETION SECTION

RESPONSIBLE FIRST LINE SUPERVISOR:

FACILITY OWNER:

DATE CLOSED:

460

TYPES OF PROJECTS NEEDING PROJECT AUTHORIZATION (PA) APPROVAL

Project Type/ Dollar Limits	PA Required	Document Required*	Davis-Bacon Determination	Approval
Cap. Equipment ≥ $1,000,000, w/installation; > $250,000 (CAP)	Yes	OR-637	Yes	DOE
Cap. Equipment ≥ $150,000, w/installation; ≤ $250,000 (CAP)	Yes	OR F 5190.1	Yes	DOE
Cap. Equipment < $150,000 (CAP)	Yes		Yes	WMCO
Conc. Design > $200,000 (EXP)	Yes	OR-637	No	DOE
Conc. Design ≤ $200,000 (EXP)	Yes		No	WMCO
Equip. Procurement > $150,000 w/no installation (CAP)	No	OR F 5190.1	No	DOE
Equip. Procurement < $150,000 w/no installation (CAP)	No	CONT-924	No	WMCO
Extraordinary Maint. Work (EXP) ≥ $150,000	Yes	OR F 5190.1	Yes	DOE
Extraordinary Maint. Work (EXP) < $150,000	Yes		Yes	WMCO
General Plant Project (CAP) > $150,000 and ≤ $1,200,000	Yes	OR-637	Yes	DOE
General Plant Project (CAP) ≤ $150,000	Yes	OR-637	Yes	WMCO
Line Item Develop. All (EXP)	Yes	OR-637	No	WMCO
Maint. by Sub-contractor (EXP) ≤ $150,000	Yes		Yes	WMCO

*For copies of forms refer to Attachments B, S, and T.

NOTE: SHOW MATERIAL FOR ONE JOB ONLY ON A REQUISITION.

13
874

ACCOUNT CHARGE: | EXPLANATION OF USE: | DATE:

STOCK NUMBER	QUANTITY	UNIT	DESCRIPTION AND SIZE	ISSUE CODE

RECEIVED BY	DELIVERED BY	APPROVED BY	REQUISITION NO.

FMPC-SAML-13 (REV. 6/9/88) **REQUISITION TO STOREKEEPER** SEE REVERSE SIDE FOR INSTRUCTIONS

13
874

INSTRUCTIONS

1. In the space provided for "Account Charge" insert only one of the following: Job Order Number, CP Number, or Cost Center. The Job Order Number, if any should always be inserted. If work is being done on CP request, the CP Number should be used. The Cost Center should only be used in the event there is no Job Order or CP Number. Do not insert anything else such as building or project numbers.
2. The space provided for "Explanation of Use" must be filled in when the requisition bears a Cost Center Number. Give brief description of the type and location of work being done.
3. It is important that the requisition be completed for the following before it is presented to the storekeeper: Account Charge, Date, Explanation of Use, Stock Number, Description, Size, Quantity, Unit (gallons, pounds, each), and Approval. Stock Numbers and Descriptions are listed in the Stores Catalog.
4. The space provided for Issue Code shall be filled in by Stores Section.

FMPC-SAML-13 (REV. 6/9/88)

ATTACHMENT G
FMPC-303, REV. 0

Issue Date: 2/15/89

REQUISITION NUMBER № 1603

PURCHASE ORDER NUMBER 2844 0-93670

Westinghouse Materials Company of Ohio
P.O.Box 398704
Cincinnati, Ohio 45239

CHARGE NUMBER ____________

LOCATION CODE ____________ DATE ________

REQUISITIONED BY: ____________

REQUISITIONER'S PHONE # 738-

AUTHORIZED BY: ____________

ORDER QTY	U/M	STOCK NUMBER	DESCRIPTION
		BINDERS	
	EA	99-2-4090	RING BINDER,6"x3¾",BLACK VINYL
	EA	L2-VR11-10-WE	VINYLBINDER,11x8½,1"CAP,WHITE,EAR
	EA	L2-VR11-20-WE	VINYLBINDER,11x8½,2"CAP,WHITE,EAR
	EA	L2-VR11-30-WE	VINYLBINDER,11x8½,3"CAP,WHITE,EAR
	EA	L2-VS11-10-WE	VINYLBINDER,SLANT RING,11x8½,1" WHT
	EA	L2-VS11-20-WE	VINYLBINDER,SLANT RING,11x8½,2" WHT
	EA	L2-VS11-30-WE	VINYLBINDER,SLANT RING,11x8½,3" WHT
	EA	L2-51250-20	SLIDING REPORT COVER,LT BLUE,11x8½
	EA	L2-88129	SMEAD PRESS REPORT COVER,11x8½,BLACK
	BX	L2-2AMP	SMEAD PRONG FASTENER,2"CAP,COMPLETE
	EA	L6-14-14111B	UNBURST DATA BINDER,15x11,BLACK
	EA	L6-90330	FINGERING DATA BINDER,11x17-3/4,[illegible]
		BINDER SUPPLIES	
	EA	L6-4722-6	DATA BINDER POST,6",1/8"DIAMETER
	EA	L6-4722-8	DATA BINDER POST,10",1/8" DIAMETER
	PL	99-46-5656	PLAIN FILLER SHEETS,6"x3¾",6-HOLE
	PK	L6-46-5650	RULED FILLER SHEETS,6"x3¾",6-HOLE
	PL	L6-28137	3-RING FILLER SHEETS,11x8½,PNT RULE
	ST	99-2088	A-Z INDEX,6"x3¾",W/RED TABS
	ST	99-41183	RING BINDER INDEX,11x8½,1-31 TABS
	ST	99-71183	RING BINDER INDEX,11x8½,A-Z TABS
	BX	A5-52-102	CLOTH REINFORCEMENTS,GUMMED,1/4"
	BX	L3-10381	STRIP TABBING,1/3"EXTENSION,CLEAR
	PK	L3-59-106	GRAY CLOTH INDEX TABS,½"EXT,BLANK
	ST	* 23-089	[illegible] TAB STOCK INDEX,11x8½,5-TAB
	EA	* 20250	SHEET PROTECTOR,11x8½,.005 GUAGE
	EA	L2-61003	SHEET PROTECTOR,TOP LOAD,11x8½,CLR
		CLIPBOARDS & PUNCHES	
	EA	99-E206	CLIPBOARD, LETTER SIZE
	EA	99-E205	CLIPBOARD, LEGAL SIZE
	EA	K2-271-1/2	3-HOLE PUNCH, HUNTER HEAVY DUTY
	EA	K2-74015	3-HOLE PUNCH, STANDARD
		CHALKBOARD, DRY ERASE & TRANSPARENCY SUPPLIES	
	DZ	J6-316-005	WHITE DUSTLESS CHALK
	EA	J6-806-526	CHALK ERASER, 5" FELT
	[illegible]	99-6306	PLAIN EASEL PAD,27x34,16#,4/CT
	[illegible]	Y2-83078	DRY-ERASE EXPO MARKERS,SANFORD,8/ST
	EA	J6-470-090	DRY ERASE BOARD CLEANER
	BX	J6-507-C	TRANSPARENCY FILM W/SENSING STRIP
	PK	J6-512	PAPER FRAMES FOR TRANSPARENCIES
		CLIPS, CLAMPS & TACKS	
	BX	99-3-1-GEM	#1 STANDARD PAPER CLIPS, 100/BX
	DZ	99-3-1C-1	#1 LARGE IDEAL BUTTERFLY CLAMP
	DZ	H6-10020	SMALL BINDER CLIPS, W/BLACK HANDLE
	DZ	H6-2001	HUNT BULL DOG CLIPS, 3/8" CAPACITY
	DZ	H6-2003	HUNT BULL DOG CLIPS, 5/8" CAPACITY
	DZ	H6-2006	HUNT BULL DOG CLIPS, 1" CAPACITY
	BX	H6-53	SOLID HEAD BRASS THUMB TACKS
		COMPUTER, CALCULATOR & TYPEWRITER SUPPLIES	
	RL	P6-C225	2¼" WHITE ADD ROLLS, SINGLE-PLY
	RL	P6-C300	3" WHITE ADD ROLLS, SINGLE-PLY
	BX	52-40-10-11.5	PENCIL CARBON, BLUE, 8½"x11½"
	EA	53-00078	TYPEWRITER CLEANER
	BX	65-4016	CONT. FORM LABELS,4x1-7/16,1 ACROSS
	EA	52-1136633	IBM CORRECTION RIBBON F/SEL II, III
	EA	52-1299095	IBM SEL II FILM RIBBON, BLACK
	EA	52-1299508	IBM SEL III FILM RIBBON, BLACK
	EA	52-83991-01	IBM QUME RIBBON, MULTISTRIKE III
	EA	52-8880C	ADDING MACHINE RIBBON, TWIN-SPOOL
		CORRECTION SUPPLIES	
	EA	53-566-01	LIQUID PAPER CORRECTION FLUID,WHITE
	EA	53-710-01	LIQUID PAPER JUST-FOR-COPIES
	EA	53-767-01	LIQUID PAPER PEN & INK WHITE OUT

ORDER QTY	U/M	STOCK NUMBER	DESCRIPTION
	EA	53-569-01	LIQUID PAPER THINNER
	EA	53-CB-18	CORRECTION TAPE,SELF ADHEV,1-LINE
		DESK ACCESSORIES	
	EA	E3-1600-1	ELDON STACKABLE TRAY,LTR SIZE,SMOKE
	EA	E3-1602-3	ELDON STACKABLE TRAY,LGL SIZE,SMOKE
	EA	E3-1606-3	ELDON STACK TRAY,DATA PROCESS,SMOKE
	PR	E3-16009-1	9" HIGH BOOKENDS, BLACK
	EA	E6-36-06	METAL TRASH CAN,15x13 ROUND,BLACK
		DESK PAD	
	EA	99-333-BK	19x24 DESK PAD, BLACK
	EA	99-6-31924GR	19x24 DESK PAD BLOTTER, GREEN
		ENVELOPES	
	BX	99-4-26-0	#9 WHT ENVELOPE,3-7/8x8-7/8,500/BX
	BX	F2-250	CLASP ENVELOPES,5x8-3/4,100/BX
	EA	* CLASS #	RENUMBERED CLASSINE ENVELOPE,2¼x4¼
		FILE FOLDERS, MANILA	
	BX	99-7-7113	MANILA FILE FOLDER,LTR SIZE,1/3 CUT
	BX	99-7-7115	MANILA FILE FOLDER,LTR SIZE,1/5 CUT
	BX	F1-43-771	FILE FOLDER LABELS, WHITE
	BX	F1-43-772	FILE FOLDER LABELS, YELLOW
	BX	F1-43-774	FILE FOLDER LABELS, RED
	BX	F1-43-776	FILE FOLDER LABELS, GREEN
	BX	F1-43-783	FILE FOLDER LABELS, ORANGE
	BX	F1-43-784	FILE FOLDER LABELS, CORAL
	BX	F1-43-785	FILE FOLDER LABELS, BLUE
		HANGING FOLDERS & SUPPLIES	
	BX	99-7-42	HANGING FOLDER, LTR SIZE, NO TAB
	BX	99-7-52-1/5	HANGING FOLDER, LTR SIZE, 1/5 TAB
	BX	99-7-53-1/5	HANGING FOLDER, LGL SIZE, 1/5 TAB
	BX	F1-4152x2	HANGING FOLDER,LTR SIZE,2"EXPANSION
	BX	F1-42	HANGING FOLDER TABS,1/5 CUT, CLEAR
	BX	F1-42-ORA	HANGING FOLDER TABS,1/5 CUT,ORANGE
	BX	F1-42-BLU	HANGING FOLDER TABS,1/5 CUT, BLUE
	BX	F1-42-GRE	HANGING FOLDER TABS,1/5 CUT,GREEN
	BX	F1-42-RED	HANGING FOLDER TABS,1/5 CUT, RED
	BX	F1-42-YEL	HANGING FOLDER TABS, 1/5 CUT,YELLOW
	EA	99-7-F1-1	HANGING FOLDER FRAME,METAL,LTR SIZE
	EA	99-7-F2-1	HANGING FOLDER FRAME,METAL,LGL SIZE
		FILE POCKETS & MISCELLANEOUS FOLDERS	
	BX	F1-615-1/3	PRESSBOARD FOLDER,LTR SIZE,1/3 CUT
	BX	F1-616-1/3	PRESSBOARD FOLDER,LGL SIZE,1/3 CUT
	EA	F1-1500B	CLASSIFICATION FOLDER,6-PART,LGL,RD
	EA	F1-1514C	FILE POCKET,REDROPE GUSSET,1.75"EXP
	EA	* 1377E	SMEAD EXPANDING POCKET,3½"EXPANSION
	EA	#1377E-2/5	SMEAD 3½" EXPANSION POCKET, 2/5 TAB
		INDEX CARDS & GUIDES	
	PK	99-4-63515-4RC	INDEX CARDS,3x5,RULED,WHITE, 100/PK
	ST	F2-3255-BLF	A-Z BRISTOL CARD GUIDE,3x5,SELF-TAB
		LABELS	
	BX	65-31-209	DENNISON GUMMED LABELS,1-1/2x1-1/8
	BX	* 31-203	DENNISON GUMMED LABELS, [illegible]
		MARKERS	
	EA	K2-27-178	MARKER,CHISEL POINT,LARGE,BLACK
	EA	99-24122	HIGHLIGHTER, CHISEL POINT, YELLOW
	EA	K2-27005	HIGHLIGHTER,FINE PT,YELLOW,SANFORD
	DZ	K5-169-T	BEROL CHINA MARKER, RED
	DZ	K5-173-T	BEROL CHINA MARKER, BLACK
		MARSH PEN SUPPLIES	
	DZ	* 014-516	MARSH OIL STENCIL BOARD,5x16,15 PT
	EA	* 2938	MARSH #99 FELT TIP MARKING PEN
	EA	* [illegible]	MARSH 6" FLO PEN
	DZ	* 99	MARSH ROUND TIPS FOR #99 PEN
		PAPER PADS	
	DZ	P3-C35W5P	WHITE SCRATCH PADS, GUMMED, 3x5

ORDER QTY	U/M	STOCK NUMBER	DESCRIPTION
	DZ	P3-C38W5P	WHITE SCRATCH PADS, 3x5
	PD	A2-655	POST-IT NOTES,3"x5",YELLOW
	DZ	P3-C8110	RULED PAD,WHITE,8½x11,GUMMED
	DZ	P3-C814CP	RULED PAD,CANARY,8½x14,PERFORATED
	PD	P3-C7107	7-COLUMN PAD,8½"x14",GREEN TINT
	PD	P3-C7213	13-COLUMN PAD,11x14-3/8,GREEN TINT
	EA	L9-21-300-8	RECORD BOOK,31-LINE W/MARGIN,10½x8½
	PK	P3-42-381	[illegible] GRAPH PAPER,11x8½, 5 SQ/IN
	EA	P3-C8075CC	STENO PAD, 60 PAGES, GREEN TINT
		PENCILS, LEADS, SHARPENERS & ERASERS	
	DZ	99-1457-2	#2 WOOD PENCIL W/ERASER
	DZ	99-1457-3	#3 WOOD PENCIL W/ERASER
	DZ	99-3557-2.5	FABER CASTELL VELVET PENCIL, #2½
	EA	H6-P200	SCRIPTO AUTOMATIC PENCIL, 0.5MM
	TU	99-100-HB	REFILL LEAD FOR AUTO PENCIL, .5MM,HB
	TU	H6-J250	ERASER REFILL F/SCRIPTO P200 PENCIL
	TU	H6-J150	ERASER REFILL F/SCRIPTO E770
	DZ	H8-101	E. FABER PINK PEARL ERASER, LARGE
	DZ	H8-1212	PENCIL CAP ERASERS, WEDGE SHAPED
	EA	K3-APSOA	BEROL PENCIL SHARPENER, GIANT
	EA	K0-KP33-BCE/AC	PANASONIC ELECTRIC PENCIL SHARPENER
		PENS	
	EA	K2-7702	BEROL FLDNG PEN, POROUS TIP, BLUE
	EA	K2-7707	BEROL FLDNG PEN, POROUS TIP, GREEN
	EA	K2-7722	BEROL FLDNG PEN, POROUS TIP, RED
	EA	K2-7735	BEROL FLDNG PEN, POROUS TIP, BLACK
	EA	K1-142-01	PAPERMATE PROFILE PEN,MEDIUM,BLUE
	EA	K1-6	REFILL F/K1-142-01 PEN, MED, BLACK
	EA	K1-BX-5-BK	PILOT PRECISE ROLLING PEN, BLACK
	EA	K1-GSF-11-BK	BIC BALL POINT PEN,FINE PT,BLACK
	EA	K1-GSM-11-BL	BIC BALL POINT PEN, MED PT, BLUE
	EA	K1-GSM-11-BK	BIC BALL POINT PEN, MED PT, BLACK
	EA	K1-GSM-11-RD	BIC BALL POINT PEN, MED PT, RED
		RUBBER BANDS	
	BX	99-E16-1/4	#16 RUBBER BANDS, 1/4 LB/BX
	BX	99-E32-1/4	#32 RUBBER BANDS, 1/4 LB/BX
	BX	99-E64-1/4	#64 RUBBER BANDS, 1/4 LB/BX
		RUBBER FINGERS	
	DZ	A8-11FR	#11 FINGER TIPS, RED
	DZ	A8-12FR	#12 FINGER TIPS, RED
		RULERS	
	EA	02-8501-12	SINGLE EDGE WOOD RULER, 12"
	EA	02-8501-18	SINGLE EDGE WOOD RULER, 18"
		STAMP PAD SUPPLIES	
	EA	83-58701	ROLL-ON STAMP PAD INKER, BLACK
	EA	83-58702	ROLL-ON STAMP PAD INKER, RED
	EA	82-95101	#1 FOAM STAMP PAD,BLACK,2-3/4x4¼
	EA	82-95102	#1 FOAM STAMP PAD,RED,2-3/4x4¼
	EA	81-82P-BK	BATES NUMBERING MACHINE PAD, BLACK
		STAPLES	
	EA	K1-38101	SWINGLINE STAPLE REMOVER
	EA	K1-550-BK	STAPLER, FULL STRIP, BLACK
	BX	99-S8019-1/4-CP	STAPLES, STANDARD, 5000/BX
		TAPE	
	RL	A8-6200-1296-3/4	3M MENDING TAPE, 3/4"x1296"
	RL	A8-6200-1296-1/2	3M MENDING TAPE, 1/2"x1296"
	EA	A8-H127	TAPE DISPENSER, HAND HELD
		MISCELLANEOUS	
	EA	A2-GM	BATES TELEPHONE INDEX,BROWN METAL
	EA	K3-150	LETTER OPENER
	EA	* MCLED	MCLED #71 BLUE UNDERARM ENVELOPE
	EA	C1-08-410	RUBBER CEMENT, 4 OZ BOTTLE W/BRUSH
	EA	K3-1132-9	SHEARS, 9" BLADE
	BX	65-C87-10C	[illegible] BADGE HOLDER,PIN,3-3/4x2¼

463

JAK form # J233R Westinghouse form # SAML-2906

WHITE COPY VENDOR PINK COPY ACCOUNTING EXTRA YELLOW COPY PURCHASING GOLD COPY REQUISITIONER

FMPC

SECURITY, ACQUISITION & MATERIALS LOGISTICS DEPARTMENT - INVENTORY CONTROL & WAREHOUSING

REQUEST FOR NEW INVENTORY ITEM

(TO BE STOCKED IN STORES)

Request No.: _____

TO: Stores Supervisor

Stores Stock No.: _____

TO BE COMPLETED BY ORIGINATOR

FROM: (NAME)	(SIGNATURE)	SECTION:	DATE:

In the event this form is used for more than (1) item, the originator will attach a separate sheet listing the amount and complete description of each.

Estimated Monthly Usage: _____; Or If Spare Part Recommended: Min. _____ Max. _____

COMPLETE DESCRIPTION *(BRAND OR SPECIFIC MANUFACTURER'S NAME AND CATALOGUE NUMBER WILL NOT BE ACCEPTED UNLESS JUSTIFICATION SUCH AS SPARE PART, ONLY KNOWN SOURCE, OR SELECTION BY TEST & EVALUATION INFORMATION IS INCLUDED IN JUSTIFICATION BELOW)*
DESCRIPTION TO INCLUDE FMPC PRINT NO., ETC.:

_____

_____

Quality Assurance - If receipts require special inspection prior to stocking, please complete the following:

For inspection upon receipt of material in Receiving, contact *(Job Title)*: _____, *(Ext.)*: _____

If special sampling plan is required, describe on an attached sheet.

CHECK APPROPRIATE BLOCKS AND FILL IN APPROPRIATE BLANKS:

☐ 1. Production supply item used routinely in the _____ process.

☐ 2. Spare part for _____, essential to production process in Plant _____

☐ 3. MRO supply frequently used and should be stocked for convenience of maintenance or general operation

☐ 4. Long delivery item — local stock needed to avoid delay in production.

☐ 5. Replacement part for non-production machinery or equipment. Need for stock in storeroom based on fact that approximately _____ (NUMBER) pieces of equipment or machinery use the named item to be stored.

☐ 6. Brand name or manufacturing source specified because:

_____

_____

☐ 7. **EQUIPMENT NO.:** _____

NOTE: UNLESS ITEM NO. 6 IS COMPLETED AND REASONS ARE VALID, PURCHASING DEPARTMENT WILL USE MULTIPLE SOURCES OF SUPPLY WHO ARE ABLE TO FURNISH ITEM(S) TO SPECIFICATIONS.

ITEM HAS BEEN PURCHASED FROM *(VENDOR)*:	P.O. NO.:	PRICE:
		$

TO BE COMPLETED BY PURCHASING DEPARTMENT

SUPPLIER(S):	PRICE:
	$

DELIVERY TIME: ROUTINE:	EMERGENCY:	BUYER:

APPROVALS:

_____ DEPARTMENT MANAGER _____ DATE

_____ ENGINEERING SERVICES OR PRODUCTION TECHNOLOGY _____ DATE

_____ QUALITY ASSURANCE _____ DATE

_____ MANAGER/INVENTORY CONTROL & WAREHOUSING _____ DATE

NO.	DISTRIBUTION OF COPIES
1	Inventory Control *(RECORD COPY)*
2	Originator
3	Maintenance *(INFORMATION COPY)*

ATTACHMENT I
FMPC-303, REV. 0
Issue Date: 2/15/89

FMPC

SECURITY, ACQUISTION & MATERIALS LOGISTICS DEPARTMENT - INVENTORY CONTROL & WAREHOUSING SECTION

REQUEST FOR CHANGE OF STOCK STATUS

TO: Stores Supervisor, _____ Stores Stock No.: _____

FROM: _____ Dept.: _____ Date: _____

Change Requested: ☐ Max. or Min. ☐ Specification ☐ Cancellation ☐ Storage and Control

DESCRIPTION OF ITEM:

PRINT NO.: | VENDOR'S NUMBER:

EQUIPMENT ITEM USED ON:

REASON FOR CHANGE:

	CURRENT	PROPOSED
MAXIMUM		
MINIMUM		

APPROVALS:

Supervisor: _____

Maintenance: _____

Engineering Services: _____
or
Production Technology: _____

Quality Assurance: _____

Stores Supervisor: _____

NO.	DISTRIBUTION OF COPIES
1	Stores Inventory Control (*RECORD COPY*)
2	Originator
3	Administrative Copy

FMPC-SA&ML-1733 (REV. 2/1/88)

FMPC
MATERIAL COMMITMENT FORM - S-114

OFFICE USE ONLY
ORDERED:
RECEIVED:

This form to be used to order a stock item when a large amount is needed for a special job.

STOCK NUMBER	UNIT	AMOUNT	DESCRIPTION	AMOUNT

FOR JOB	SUPERVISOR	DATE NEEDED
DELIVER TO	IT IS AGREED THAT THIS MATERIAL WILL BE CHECKED OUT OF STORES BY	
DATE S-114 GIVEN TO STORES.	BY	

FMPC-SAML-63 (REV. 11/15/88)

NOTE: This form is NOT used for excess property disposal. To excess property, use form FMPC-CONT-563.

FMPC
ACCOUNTING

PROPERTY RECLASSIFICATION REQUEST

NO.: 05206

FOR ACCOUNTING USE ONLY
ACQ. COST:
ACCUM. DEPR.:
J V NO.:

TO BE RECLASSIFIED:

☐ Stand-By ☐ In Service
☐ Held for Future Projects ☐ Other _____

DESCRIPTION OF ITEM:	SIZE OR CAPACITY:	* IS PART OF PROPERTY RECORD UNIT:	
MANUFACTURER'S NAME:	SERIAL NO.:	TYPE OR MODEL:	TAG NO.:

OM:	AREA:
O:	AREA:

JUSTIFICATION FOR RECLASSIFICATION:

ESTIMATED DATE OF REACTIVATION:	CONDITION OF EQUIPMENT:	LEVEL OF CONTAMINATION:

* For Accounting Use Only

NO.	DISTRIBUTION OF COPIES
1	General Accounting *(RECORD COPY)*
2	To Be Attached to Property
3	Property Custodian
4	Initiator
5	Maintenance

SEE REVERSE SIDE FOR REVIEWER AND REVIEW DATES.

INITIATED BY:	APPROVED BY: (DEPARTMENT MANAGER)
DATE:	DATE:

FMPC-CONT-2388 (REV. 8/15/88)

WMCO

SENSITIVE PROPERTY MEMORANDUM RECEIPT

(FOR LONG TERM AND INTER-PLANT LOANS)

NAME OF EMPLOYEE: _____ BADGE NUMBER: _____ DEPARTMENT/ SECTION: _____

ITEM		QUANTITY	DATE ISSUED	RETURNED DATE		DATES INVENTORIED (CONTINUATION ON REVERSE)				
NO.	DESCRIPTION			DATE	REC'D. BY					
1										
2										
3										
4										
5										
6										
7										
8										
9										
10										
11										
12										
13										
14										
15										
16										
17										
18										
19										
20										
21										

I understand that the above-listed items are in my charge until returned, and that I am responsible for the safekeeping of such items.

_____
(SIGNATURE)

DISTRIBUTION OF COPIES			
FOR LONG TERM LOANS		FOR INTER-DEPARTMENT LOANS	
1	Sensitive Property Administrator (RECORD COPY)	1	Loaning Section (RECORD COPY)
2	Employee	2	Employee
		3	Employee's Section Manager

FMPC-CONT-124 (REV. 11/17/88)

ATTACHMENT M2344
FMPC-303, REV. 0
Issue Date: 2/15/89

FMPC
CONTROLLER'S ORGANIZATION - GENERAL ACCOUNTING

PROPERTY DISPOSAL REQUEST

Date: _____

FOR GENERAL ACCOUNTING USE ONLY		
JOURNAL VOUCHER NO.:		CONTROL NO.:
COST	Basic	
	Other	
	Accumulated Depreciation	
	Net Book Cost	
Acquisition Date:		
Retirement Unit Number:		

SECTION — A

DESCRIPTION

BAR CODE NUMBER

MANUFACTURER

MODEL NUMBER

SERIAL NUMBER (OR IF STORES ITEM, LIST STOCK NUMBER)

SIZE OF CAPACITY

LOCATION

Equipment No.:

DOES UNIT CONTAIN PRECIOUS OR CRITICAL MATERIALS?
☐ YES ☐ NO. IF YES, TYPE:
☐ GOLD ☐ PALLADIUM ☐ IRIDIUM ☐ RUTHENIUM
☐ SILVER ☐ RHODIUM ☐ OSMIUM ☐ MERCURY
☐ PLATINUM ☐ OTHER _____
ESTIMATED QUANTITY IN TROY OZ. _____

Are spare parts available? (CHECK ONE) ☐ Yes ☐ No
Are manuals available? (CHECK ONE) ☐ Yes ☐ No
Are spare parts to be excessed?* (CHECK ONE) ☐ Yes ☐ No
*** If spare parts are to be excessed, please list; if not excessed, please give reason.***

SECTION — B

☐ SURPLUS ☐ NON-SURPLUS

ESTIMATED RE-SALE VALUE $ _____

PHYSICAL CLASSIFICATION		DISPOSAL CONDITION CODE								
CLASS		1	2	3	4	5	6	7	8	9

1 = Unused — good
2 = Unused — fair
3 = Unused — poor
4 = Used — good
5 = Used — fair
6 = Used — poor
7 = Repairs Required — good
8 = Repairs Required — fair
9 = Repairs Required — poor

Salvage		REASON FOR CLASSIFICATION AS SALVAGE.	REASON TO RECLASSIFY AS SCRAP BY SALVAGE & DISPOSAL SECT.
Scrap		REASON FOR CLASSIFICATION AS SCRAP	CLASSIFIED BY: EXCESS DISPOSAL COORDINATOR & DATE.
CLASSIFIED BY		SUPERVISOR & DATE	APPROVED BY: PROCUREMENT DIRECTOR & DATE

Notify Excess Supervisor For Inspection Before Shipping

SECTION — C

MONITORING DATA

Type of contamination — ☐ Normal; ☐ Enriched; ☐ Depleted; ☐ Other

This equipment ☐ does ☐ does not present a potential hazard because of contamination by nonradioactive material or because of nonvisible characteristics. If there is a potential hazard, attach a sheet of explanation.

IF EQUIPMENT INDICATED AS A POTENTIAL HAZARD REVIEWED BY IH	IH REPRESENTATIVE & DATE	REVIEWED WITH IH REPRESENTATIVE	EXCESS DISPOSAL COORDINATOR & DATE.

Signature: _____ (INITIATOR OR INVENTORY CUSTODIAN)

Approved By: _____ (DEPARTMENT MANAGER)

SECTION — D

RECEIVED RECLAMATION AND DISPOSAL AREA	EXCESS DISPOSAL COORDINATOR & DATE	REVIEWED BY STOREKEEPER	STOREKEEPER & DATE

SECTION — E

PREPARATION AND ROUTING:

1. Initiator prepares original and five (5) copies and completes Section A.
2. Initiator contacts the EDC and completes Section B.
3. Initiator has material monitored by ERMT and completes Section C.
4. Initiator has form approved by Staff Manager.
5. Initiator forwards all copies to EDC via Stores Warehouse Supervisor.
6. EDC and Storekeeper complete Section D.
7. All Copies are then sent to Property Accounting who numbers forms and retains original and one copy, sends two copies to originator and two to EDC.
8. Initiator upon receipt of two controlled numbered forms affixes one to excessed items and retains one for record purposes.
9. Initiator calls EDC to coordinate removal of items.

2314

Westinghouse Materials Company of Ohio
BOX 398704 CINCINNATI, OHIO 45239-8704
PHONE 513-738-6200

MISCELLANEOUS SHIPPING ORDER

ATTACHMENT N 2344
FMPC-108, REV. 0
Issue Date: 2/15/89

MSO No. _____

Date _____

SHIP TO | STREET | CITY & STATE

GROSS | TARE | NET | PREPAID | COLLECT

Requested By _____ (ORIGINATOR)

QUANTITY	FULL DESCRIPTION

REASON FOR SHIPMENT

GIVE LOCATION IF NOT DELIVERED TO SHIPPING

REFERENCE OR PURCHASE ORDER NO | CHARGE

Approved By _____ (PURCHASING)

(TO BE FILLED IN BY TRANSPORTATION)

Date Shipped _____ Bill of Lading No. _____

Received in Good Order By _____

DISTRIBUTION OF COPIES	
1 (White) Transportation (RECORD COPY)	5 (Salmon) Stores (RECORD COPY)
2 (Pink) Accounting - Accounts Payable (RECORD COPY)	6 (Canary) Receiving
3 (Blue) Purchasing	7 (Green) Originator
4 (Goldenrod) Consignee	

FMPC-SAML-871 (REV. 7/14/88)

470

Westinghouse Materials Company of Ohio
CONTROLLER'S ORGANIZATION

LOANED PERSONAL PROPERTY AGREEMENT

Date _____

A

LOANED TO: | IDENTIFICATION NUMBER:

DESCRIPTION OF LOANED PERSONAL PROPERTY:
(DESCRIBE LOANED ITEM, E.G., MOTOR; PUMP; SPEED-REDUCERS; INSTRUMENT, STATE KIND OF INSTRUMENT; ETC. USE TITLES SHOWN IN FMPC PROPERTY RECORD UNIT CATALOG, WHERE APPLICABLE.)

MANUFACTURER: | SIZE OR CAPACITY:

TYPE OR MODEL: | MANUFACTURER'S SERIAL NUMBER:

FOR USE ON WORK AUTHORIZED BY:
WMCO Subcontract No.: _____ WMCO P.O. NO.: _____ Other: _____

Date to be Returned _____ Requested by _____
(WMCO SECTION HEAD)

B

WMCO Approval Date _____ Approved by _____
(WMCO DEPARTMENT MANAGER)

C

DOE APPROVAL: (REQUIRED FOR LOANS NOT PROVIDED FOR IN PURCHASE ORDERS OR SUBCONTRACTS)

DOE Approval Date _____ Approved by _____
(CONTRACT ADMINISTRATOR)

D

IN CONSIDERATION OF THE LOAN OF THE DOE PROPERTY DESCRIBED ABOVE, FOR THE PURPOSE INDICATED, THE UNDERSIGNED, ON BEHALF OF HIMSELF AND THE ORGANIZATION RECEIVING THE PROPERTY, AGREES:

1. To use such property only for the purpose stated herein and to take all reasonable precautions and measures to protect the property from loss, theft, or damage;
2. To return the property on or before the date provided for its return, or sooner if so requested by the DOE;
3. That neither the U.S. Government, the Department of Energy nor Westinghouse Materials Company of Ohio, their agents, employees or representatives, make any express or implied warranty or representation that the property is safe, or will not cause injury, death, or damage to persons or property if used for the purpose loaned or any other purpose; and further, that neither the Government, the DOE, nor WMCO, their agents, employees or representatives, is responsible for any injury to or death of persons or for damage to property resulting from its use for the purpose stated herein, or while in the custody or control of the undersigned or other representatives of the organization receiving or using the property.

DATE: | COMPANY:

BY: (SIGNATURE) | TITLE:

E

DATE SHIPPED: | WMCO/MSO NO.: | DATE RETURNED: | WMCO/RR NO.:

INSTRUCTIONS: Prepare number of copies as indicated by distribution and distribute after Department Manager's approval.

DISTRIBUTION OF COPIES	
LOANS BY WMCO TO ANOTHER	
1	To Controller's Organization - Original *(RECORD COPY)*
2	To Procurement Section
3	DOE - Contract Administrator
4	Section from which Equipment was taken
5	To Department Manager's File
6	To Borrower
7	To Security Section

FMPC-CONT-17 (REV. 11/17/88)

Westinghouse Materials Company of Ohio
CONTROLLER'S ORGANIZATION

EMPLOYEE TEMPORARY PROPERTY PASS

PLEASE PRINT (Use Ball Point Pen) Date: _____

RESPONSIBLE EMPLOYEE:		BADGE NUMBER:
DESCRIPTION OF PERSONAL PROPERTY:		
MANUFACTURER:	MANUFACTURER SERIAL NO.:	BAR CODE NO.:
TYPE OR MODEL:	SIZE OR CAPACITY:	
FOR USE ON WORK AUTHORIZED BY:	OTHER:	

SUBCONTRACT NO.:

WMCO PO NO.:

DATE TO BE RETURNED:	REQUESTED BY: _____ (WMCO EMPLOYEE)
SHOULD A WMCO PROPERTY REMOVAL PASS BE ISSUED TO EMPLOYEE FOR RECURRING REMOVAL OF THE ABOVE MENTIONED PROPERTY FROM SITE?	
☐ NO ☐ YES	Expiration Date of Pass: _____
WMCO APPROVAL DATE:	APPROVED BY: _____ (SIGNATURE OF WMCO AUTHORIZED MANAGER)
COMPUTER PROTECTION PROGRAM MANAGER: *(Required for Computer Equipment/Software ONLY)* DATE:	CPPM:
WMCO PROPERTY ACCOUNTING MANAGER: DATE:	APPROVED BY:

IN CONSIDERATION OF THE RELOCATION OF THE DOE PROPERTY DESCRIBED ABOVE FOR THE PURPOSE INDICATED, THE UNDERSIGNED, ON BEHALF OF HIMSELF/HERSELF AND THE ORGANIZATION RECEIVING THE PROPERTY, AGREES:

1. To use such property only for the purpose stated herein and to take all reasonable precautions and measures to protect the property from loss, theft, or damage.
2. To return the property on or before the date provided for its return, or sooner if so requested by Westinghouse Materials Company of Ohio (WMCO) or the Department of Energy (DOE).
3. That neither the U.S. Government, the DOE, nor WMCO, their agents, employees, or representatives, make any express or implied warranty or representation that the property is safe, or will not cause injury, death or damage to persons or property if used for the purpose loaned or any other purpose; and further, that neither the Government, the DOE, nor WMCO, their agents, employees or representatives, is responsible for any injury to or death of persons or for damage to property resulting from its use for the purpose stated herein, or while in the custody or control of the undersigned or other representatives of the organization receiving or using the property.
4. It is a violation of Site Policy to attempt to enter or leave the FMPC with computer equipment or software regardless of origin without prior approval of the Computer Protection Program Manager (CPPM) or a designated representative. Any attempts of improper use, manipulation, alteration, unauthorized disclosure as a result of criminal, fraudulent or other improper acts will result in a security violation.

DATE:	PHONE EXT.:	DEPARTMENT/GROUP:
RESPONSIBLE EMPLOYEE *(Signature)*:		TITLE:

DISTRIBUTION OF COPIES		
Surrender At Point of EXIT:		
1	*White*	Department Manager
2	*Blue*	Property Accounting Section
Surrender At Point of ENTRY:		
3	*Yellow*	Property Accounting Section
4	*Green*	TO BORROWER

SECURITY USE ONLY	
LOG OUT	LOG IN
INT:	INT
BADGE:	BADGE:
TIME:	TIME:
DATE:	DATE:

472

PROPERTY RECURRING REMOVAL PASS

FMPC-CONT-3014 (8/18/88)

BADGE NUMBER:
NAME:
EXPIRATION DATE:

Westinghouse Materials Company of Ohio

WMCO AUTHORIZED OFFICIAL

PROPERTY RECURRING REMOVAL PASS

FMPC-CONT-3014 (8/18/88)

BADGE NUMBER:
NAME:
EXPIRATION DATE:

Westinghouse Materials Company of Ohio

WMCO AUTHORIZED OFFICIAL

PROPERTY RECURRING REMOVAL PASS

FMPC-CONT-3014 (8/18/88)

BADGE NUMBER:
NAME:
EXPIRATION DATE:

Westinghouse Materials Company of Ohio

WMCO AUTHORIZED OFFICIAL

AUTHORIZED LIST OF GOVERNMENT PERSONAL PROPERTY ALLOWED OFF—SITE

TAG NO.	DESCRIPTION	MF.	MODEL	S/N

This property removal pass is accountable U.S. Government property and must be returned upon termination of employment. Counterfeiting, alteration or misuse violates section 499 Title 18 U.S. Code. The holder of this pass certifies that the above equipment will be removed from plant site for use only in conjunction with company business, will not be used for personal reasons, and will be returned by holder within a reasonable period.

FMPC-CONT-3014 (8/18/88)

AUTHORIZED LIST OF GOVERNMENT PERSONAL PROPERTY ALLOWED OFF—SITE

TAG NO.	DESCRIPTION	MF.	MODEL	S/N

This property removal pass is accountable U.S. Government property and must be returned upon termination of employment. Counterfeiting, alteration or misuse violates section 499 Title 18 U.S. Code. The holder of this pass certifies that the above equipment will be removed from plant site for use only in conjunction with company business, will not be used for personal reasons, and will be returned by holder within a reasonable period.

FMPC-CONT-3014 (8/18/88)

INSTRUCTIONS: Prepare in duplicate. Original (White Copy) must be surrendered to Security Policeman at the exit gate on the day the material or personal property is carried from the site. Duplicate (Blue Copy) to be retained by the Issuing Department.

Westinghouse Materials Company of Ohio

PACKAGE AND BRIEF CASE PASS

PASS NO.:

TYPE OF PASS: ☐ Brief Case: ☐ Package: ☐ Other _____

CONTENTS:

NAME:	BADGE NO.:	GOOD ONLY (DATE):
DEPARTMENT	PLANT/SECTION:	

The above designated bearer is authorized to remove from the site personal property and, for official use, minor amounts of government material and equipment except contraband and process material.

NO.	DISTRIBUTION OF COPIES
1	Security (RECORD COPY)
2	Issuing Department

Signed _____

For _____
(DEPARTMENT MANAGER)

FMPC-SAML-339 (REV. 3/25/88)

UNITED STATES
DEPARTMENT OF ENERGY
OAK RIDGE OPERATIONS OFFICE
P. O. BOX E
OAK RIDGE, TENNESSEE 37830

SYMBOL:

DIRECTIVE AUTHORIZATION

DIRECTIVE NO.

MODIFICATION NO.

DATE

PLANT

LOCATION

1. TITLE

2. TO

3. WORK AUTHORIZED FOR USDOE BY

(Signature)

Name

Title

4a. Previous Directive Action
Date

4b. Request for Directive Action
Date

4c. Preliminary Proposal
Date

4d. Action Memorandum
Date

4e. Other References

5. PRELIMINARY PROPOSAL APPROVED

☐ As Submitted ☐ With Exception as Noted on Reverse ☐ For Design Only

Date

6a. Current Start Date
Design:
Constr:

6b. Current Completion Date
Design:
Constr:

6c. Difference in Months

7. AUTHORIZED COST BY PARTICIPANTS

A. Participant
B. Type of Contract
C. Contract No.
D. Con. Administrator

E. Authorized Costs

					Total
(1) Engineering	$	$	$	$	$
(2) Constr. Cost					
(3) Std. Equip.					
(4) Contingencies					
(5) Total Auth.	$	$	$	$	$

8. SUMMARY OF FUNDING REQUIREMENTS

	Classification	Item Number	Item Name	Amount
A.				$
B.				
C.				

D. Change This Action (If Applicable) $

E. Total Authorized $

F. Remarks

475

Form OR F 5190.1 (Formerly OR-638)

REQUEST AND APPROVAL FOR EQUIPMENT, MAINTENANCE, AND EXPERIMENTAL PROJECTS

2344

A. REQUEST (Use reverse side for description and justification.)

Date _____

Contractor and Installation _____

Proposed Item and Location _____

Fiscal Year Authorized & Consecutive Number of Project _____

Modification No. _____

B. BREAKDOWN OF ESTIMATED COST

1. Engineering Design & Inspec. $ _____
2. Direct Cost :
   - A. Equipment $ _____
   - B. Inst. of Equip. _____
   - C. Maint. & Related Expense _____
   - D. Other (Specify) _____ _____
3. Indirect Cost _____
4. Contingency _____

Gross Total $ _____

5. Salvage Credits _____

Net Total $ _____

C. NET COST BY ACTIVITY

Activity No.	Net Cost
	$
Total	$

D. FINANCIAL PLAN

Change Required : Yes ☐ No ☐

(If "Yes" attach explanation following items and amount involved.)

E. TIMING

1. Estimated Starting Date _____ (If other than when approved.)
2. Estimated Time To Complete _____ Mos.

F. MODIFICATIONS (Complete if applicable and use reverse side for explanation.)

1. This action involves change (increase or decrease) from previous estimated cost :
   - Gross $ _____
   - Salvage _____
   - Net $ _____
2. This action involves an Extension ☐ Advancement ☐ of _____ months from previous estimated time to complete.

G. REQUESTING OFFICIAL

Title _____ Signature _____

H. CONCURRENCES (Required only on Contract Administrator file copy.)

_____ _____

I. APPROVAL- Approved for the Department of Energy by:

Date _____ Title _____ Signature _____

J. DISTRIBUTION (Check one box on EACH copy.)

- ____ Contractor (After approval by Contract Administrator)
- ____ Contract Administrator (Concurrences required on this copy)
- ____ Budget and Reports Division
- ____ Oak Ridge Division or _____ (For Area Office use only)
- ____ Davis-Bacon Committee (When applicable) (2 copies)
- ____ Contractor (Suspense file)