G-000-711.13

2657

MONTHLY TECHNICAL PROGRESS REPORTS JANUARY 1988

01/01/88

54
ENCLOSURE

[redacted]

2657

REMEDIAL INVESTIGATION
AND
FEASIBILITY STUDY
FEED MATERIALS PRODUCTION CENTER
FERNALD, OHIO

MONTHLY TECHNICAL PROGRESS REPORTS

JANUARY 1988

FMPC SITEWIDE RI/FS
JANUARY 1988
MONTHLY TECHNICAL PROGRESS REPORTS

STATUS

General

Progressive actions have continued on the FMPC sitewide RI/FS. Seven monitoring wells were completed during January, for a total of 42, bringing the total drilling footage to 2814.2. A meeting was held on January 21, 1988 with FMPC, USEPA, and OEPA personnel to review progress to date on the Groundwater Sampling Program of the RI/FS. Topics discussed at the meeting included the installation procedure for 100 series wells and the relocation of well 146.

Activities continued on the preparation of the comment responses to the EPA comments on the RI/FS Work Plan Revision 1.

Task 1 - Description of Current Situation

Task Completed.

Task 2 - RI Work Plan Requirements

Actions continued on the compilation of the comment responses to the EPA comments on the RI/FS Work Plan Revision 1. The February 11, 1988 deliverable will include comment responses, the Work Plan Revision 2, and change pages to the supporting documentation.

Task 2 Percent Complete: Original Deliverable - Complete
Work Plan Rev. 1 - Complete
Comment Responses Round 2 - 95%

Task 3 - Site Investigation

Groundwater and Subsurface Soils - Drilling was completed at well locations 224, 125, 264, 364, 138, 183, and 128 during January. Additionally, 221 feet of drilling was completed at well locations 304, 337, and 368. A summary of the wells installed during January and their completed depths appears in the following table:

RI/FS WELL LOCATION	COMPLETION DEPTH (ft)	
224	70.1	
125	23.0	
264	85.0	
364	141.5	
138	28.5	
183	22.5	
128	30.5	
304	30.0	(In Progress)
337	51.0	(In Progress)
368	140.0	(In Progress)
Total:	622.1	

When added to the previously reported total drilling depth of 2192.1 feet, total drilling footage through January 31, 1988 is 2814.2 feet. The seven wells installed during January were completed consistent with the protocols defined within the Work Plan Revision 1 and supporting documentation.

A meeting was held on January 21, 1988 between representatives of USEPA, OEPA, and the FMPC on the status of the RI/FS Groundwater Sampling Program. Technical agreement was reached between the involved parties at the meeting to complete the following actions:

1) Relocate well 146 thirty five feet to the northwest due to the presence of a magnetic anomaly at the originally sighted location.

2) Drill four 100 series wells (180, 130, 172, 176) in the waste storage area to a depth of 50 feet to collect lithologic information and guide well screen installation. The borings at these locations will be back grouted to the well screen depths with Volclay grout.

Also at this meeting representatives of OEPA, USEPA, and FMPC walked the perimeter of the FMPC Waste Storage Area to locate seeps from solid waste management units. Positive identification of four seeps was made during this survey. A second walkover will be conducted during the Spring of 1988 to identify further seeps.

Transit Survey - Control surveys for the establishment of permanent survey monuments were initiated during January. Deed searches and property maps were completed for the fifteen proposed offsite monitoring well locations.

Radiation Measurement Survey - Surface radiological surveys were continued in the area north of the production area within the security buffer zone. To date 156 complete grids and 31 partial grids have been surveyed with SPA-3 and FIDLER detection systems as part of the Radiation Measurement program of the RI/FS.

A demonstration was held on January 12, 1988 as part of the monthly Technical Information Exchange meeting for USEPA, OEPA, and FMPC personnel on the USRADS System. The USRADS system is proposed for usage on the RI/FS for the completion of the remaining surface radiological surveys.

Surface Soil Sampling - The Surface Soil Sampling Program continued during January with the collection of eleven (11) biased soil samples.

Biological Resources - Sampling activities under the Biological Resources Sampling Program of the RI/FS are on hold until late winter. Samples collected during the fall of 1987 are currently undergoing analysis at the Radiological Sciences Laboratory in Oak Ridge, Tennessee.

Task 3 Percent Complete: 40%

Task 4 - Site Investigation Analysis

Data Base - The Flow Gemini Data Management System is now fully operational to receive, sort, retrieve, manipulate, and display data in graphic form. Preparations are now complete for the transfer of the data base from the CIS to the Flow Gemini Data Base.

Groundwater Modeling - Additional calibrations of the 2 dimensional McDonald & Harbaugh groundwater flow model were completed during January.

Task 4 Percent Complete: 20%

Tasks 5 and 6

No significant progress.

Task 7 - Program Management and Reports

No significant actions during this reporting period.

Task 7 Percent Complete: Not applicable (apportioned effort).

Task 8 - Community Relations Support

No significant actions during this reporting period.

Task 8 Percent Complete: Not applicable (apportioned effort).

CHARACTERIZATION INVESTIGATION STUDY

Volume 3 of the Characterization Investigation Study (CIS) final report is currently in final review and is anticipated to be issued in February, 1988. Volume 3 of the CIS final report provides the results of the comprehensive surface radiological surveys conducted in the FMPC waste storage area.

DIFFICULTIES ENCOUNTERED

None.

ACTIONS TAKEN TO RECTIFY PROBLEMS

None Required.

CHANGES IN PERSONNEL

No personnel changes this reporting period.

RESULTS OF SAMPLING

Initial radiochemical analysis results from the RI site investigation are now available. As data becomes available, it will be reported in Technical Information Exchange (TIE) meetings.

Attachment 1 to this report provides the lithologic and well completion logs for monitoring wells 224, 128, 264, 138, 364, 183, and 125.

PLANNED ACTIVITIES NEXT MONTH

- Complete 5 additional groundwater monitoring wells
- Initiate electronic transfer of data from the Characterization Investigation Study TIMS system to the Flow Gemini data base
- Initiate activities associated with the development of a sampling plan for the sampling of the K-65 silos and silo 3.
- Initiate contacts with offsite property owners for the installation of the fifteen offsite groundwater monitoring wells.

Boring 224

2657

FERNALD RI/FS

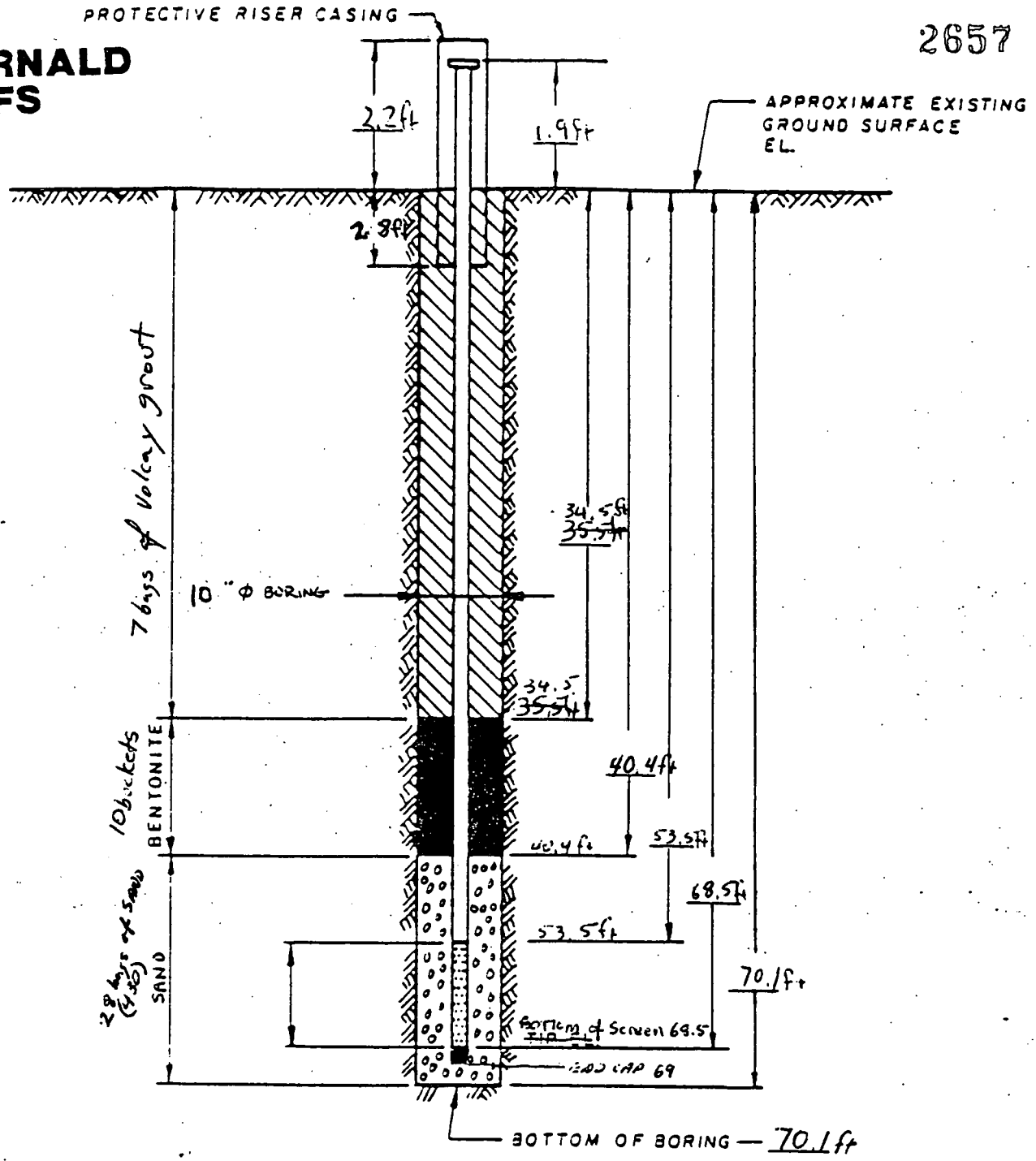

NOTES:

1. RISER PIPE IS IN I.D. SCHEDULE PIPE, THREADED, FLUSH-JOINTED.
2. SCREEN IS IN I.D PIPE CONTINUOUS SLOT SCREEN (0.0 0 IN. SLOT SIZE).
3. LOWER END OF SCREEN IS CAPPED.
4. ELEVATION OF WATER LEVEL
5. WATER LEVEL READING ON

INSTALLATION DETAILS
MONITORING WELL 224

PREPARED FOR

DRAWING NUMBER

CHECKED BY

APPROVED BY

DRAWN BY

PAC

FERNALD RI/FS

2657

PIEZOMETER INSTALLATION SHEET

PROJECT NAME FERNALD RI/FS FIELD ENG./GEO. Will Kegley DATE 10 29 87
PROJECT NO. 602 CHECKED BY DATE
BORING NO. 224
PIEZOMETER NO. 224 DATE OF INSTALLATION 10-29-87 thru 10 30 87

BOREHOLE DRILLING

DRILLING METHOD CABLE TOOL
DRILLING FLUID (S) USED:
FLUID WATER FROM 0 TO 70.1 ft
FLUID NA FROM NA TO NA

TYPE OF BIT HAMMER (FLAT HEAD)
CASING SIZE (S) USED: (TEMPORARY)
SIZE 10" FROM 0 TO 73 ft
SIZE NA FROM NA TO NA

PIEZOMETER DESCRIPTION

TYPE STAINLESS STEEL (316)
DIAMETER OF PERFORATED SECTION 4.0 in
PERFORATION TYPE:
SLOTS ☐ HOLES ☐ SCREEN ☒
AVERAGE SIZE OF PERFORATIONS 0.010 in
TOTAL PERFORATED AREA 15 ft

RISER PIPE MATERIAL 316 STAINLESS STEEL
RISER PIPE DIAMETERS:
O.D. ____ I.D. 4.0
LENGTH OF PIPE SECTIONS (1) 5 ft (2) 2 ft (4) 10 ft
JOINING METHOD FLUSH JOINT THREADED

PROTECTION SYSTEM

RISER PROTECTIVE PIPE LENGTH 5.0 ft
PROTECTIVE PIPE O.D. 10 inch

OTHER PROTECTION Locking top

ITEM	DISTANCE ABOVE/BELOW GROUND SURFACE (FT)		ELEVATION (FT) MSL	
TOP OF RISER PIPE	1.9			
GROUND SURFACE	0.0			
BOTTOM OF PROTECTIVE PIPE	2.8			
BOREHOLE FILL MATERIALS:				
GROUT/SLURRY	TOP 2.1	BOTTOM 34.5	TOP	BOTTOM
BENTONITE	TOP 34.5	BOTTOM 40.4	TOP	BOTTOM
SAND	TOP 40.4	BOTTOM 70.1	TOP	BOTTOM
NO GRAVEL USED	TOP —	BOTTOM —	TOP	BOTTOM
PERFORATED SECTION	TOP 53.5	BOTTOM 65.5	TOP	BOTTOM
PIEZOMETER TIP	69.0			
BOTTOM OF BOREHOLE	70.1			
GWL AFTER INSTALLATION	NK			

WAS THE PIEZOMETER FLUSHED AFTER INSTALLATION? YES ☐ NO ☒
WAS A SENSITIVITY TEST PERFORMED ON THE PIEZOMETER? YES ☐ NO ☒

8

REMARKS

409-11-86

Boring 183 #38

FERNALD RI/FS

2657

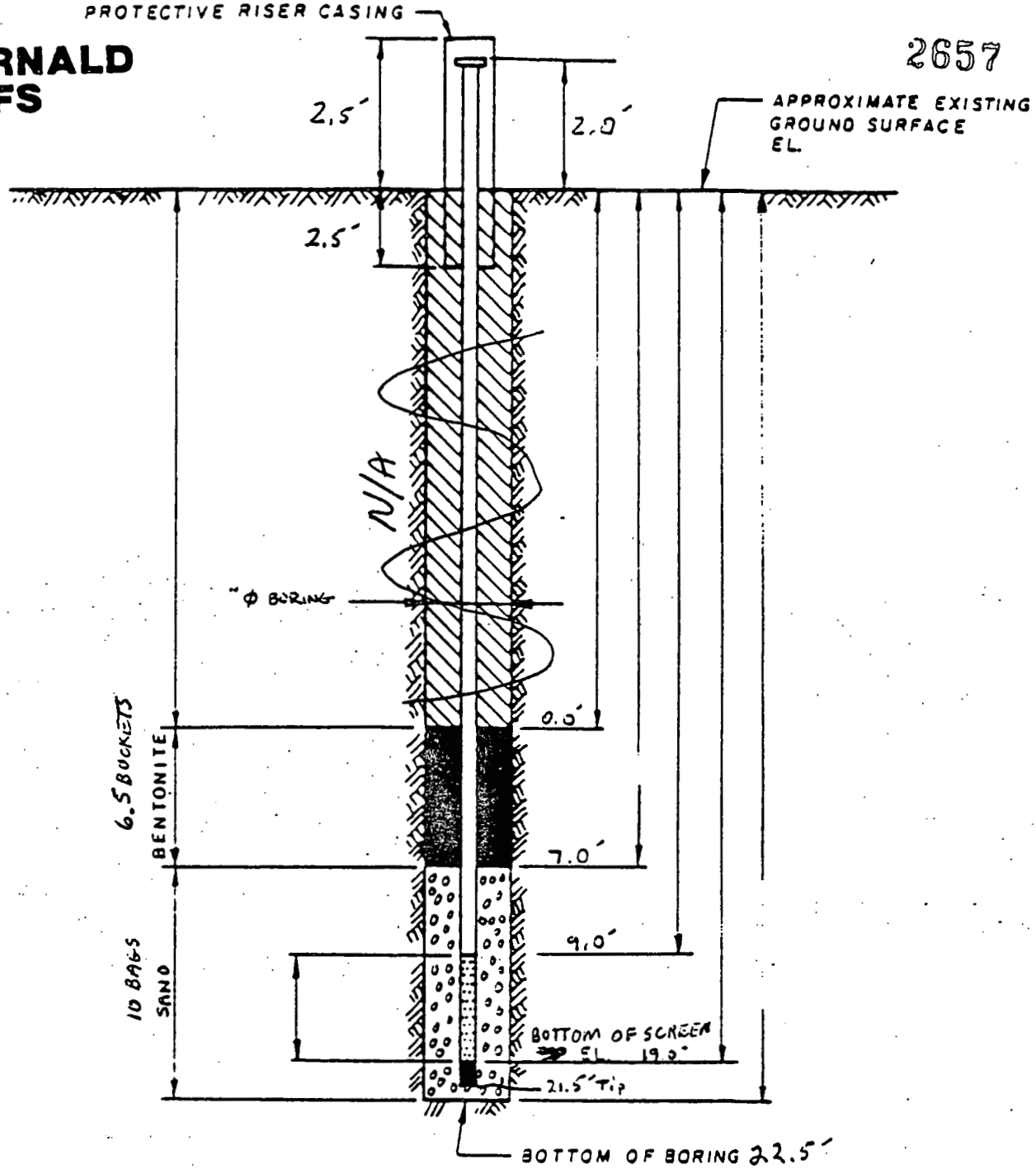

NOTES:

1. RISER PIPE IS IN 10. SCHEDULE PIPE, THREADED. FLUSH-JOINTED.
2. SCREEN IS IN 1.0 PIPE CONTINUOUS SLOT SCREEN (0.0 0 IN. SLOT SIZE).
3. LOWER END OF SCREEN IS CAPPED.
4. ELEVATION OF WATER LEVEL
5. WATER LEVEL READING ON

INSTALLATION DETAILS
MONITORING WELL 183

PREPARED FOR

DRAWN BY	KEGLEY 01 09 98	CHECKED BY	APPROVED BY	DRAWING NUMBER

FERNALD RI/FS

2657

PIEZOMETER INSTALLATION SHEET

PROJECT NAME FMPC RI IFS FIELD ENG./GEO. W. KEGLER DATE 01 09 88
PROJECT NO. 602 T3.2 CHECKED BY _____ DATE _____
BORING NO. 183
PIEZOMETER NO. 183 DATE OF INSTALLATION 01 09 88

BOREHOLE DRILLING

DRILLING METHOD CABLE TOOL
DRILLING FLUID (S) USED:
FLUID H_2O FROM 0.0' TO 21.5'
FLUID NA FROM NA TO NA

TYPE OF BIT FLAT HEAD
CASING SIZE (S) USED:
SIZE 10 in FROM 0 TO 21.5
SIZE NA FROM NA TO NA

PIEZOMETER DESCRIPTION

TYPE MONITORING
DIAMETER OF PERFORATED SECTION 4 inch
PERFORATION TYPE:
SLOTS ☐ HOLES ☐ SCREEN ☒
AVERAGE SIZE OF PERFORATIONS .010 inch
TOTAL PERFORATED AREA 10 feet

RISER PIPE MATERIAL 316 STAINLESS STEEL
RISER PIPE DIAMETERS:
O.D. 4 3/8 inch I.D. 4 inch
LENGTH OF PIPE SECTIONS 10 feet
JOINING METHOD THREAD AND COUPLE (FLUSH JOINT THREADED)

PROTECTION SYSTEM

RISER PROTECTIVE PIPE LENGTH 5 Feet
PROTECTIVE PIPE O.D. 10 inch

OTHER PROTECTION LOCKABLE CAP AND LOCK

ITEM	DISTANCE ABOVE/BELOW GROUND SURFACE (FT)		ELEVATION (FT) MSL	
TOP OF RISER PIPE	2.0'			
GROUND SURFACE	0.0			
BOTTOM OF PROTECTIVE PIPE	2.5'			
BOREHOLE FILL MATERIALS:				
GROUT/SLURRY	TOP	BOTTOM	TOP	BOTTOM
BENTONITE	TOP 0.0'	BOTTOM 7.0'	TOP	BOTTOM
SAND	TOP 7.0'	BOTTOM 22.5'	TOP	BOTTOM
GRAVEL	TOP NA	BOTTOM NA	TOP	BOTTOM
PERFORATED SECTION	TOP 9.0'	BOTTOM 19.0'	TOP	BOTTOM
PIEZOMETER TIP	21.5 feet			
BOTTOM OF BOREHOLE	22.5 feet			
GWL AFTER INSTALLATION				

WAS THE PIEZOMETER FLUSHED AFTER INSTALLATION? YES ☐ NO ☐
WAS A SENSITIVITY TEST PERFORMED ON THE PIEZOMETER? YES ☐ NO ☐

10

REMARKS _____

409-11-86

FERNALD RI/FS

2657

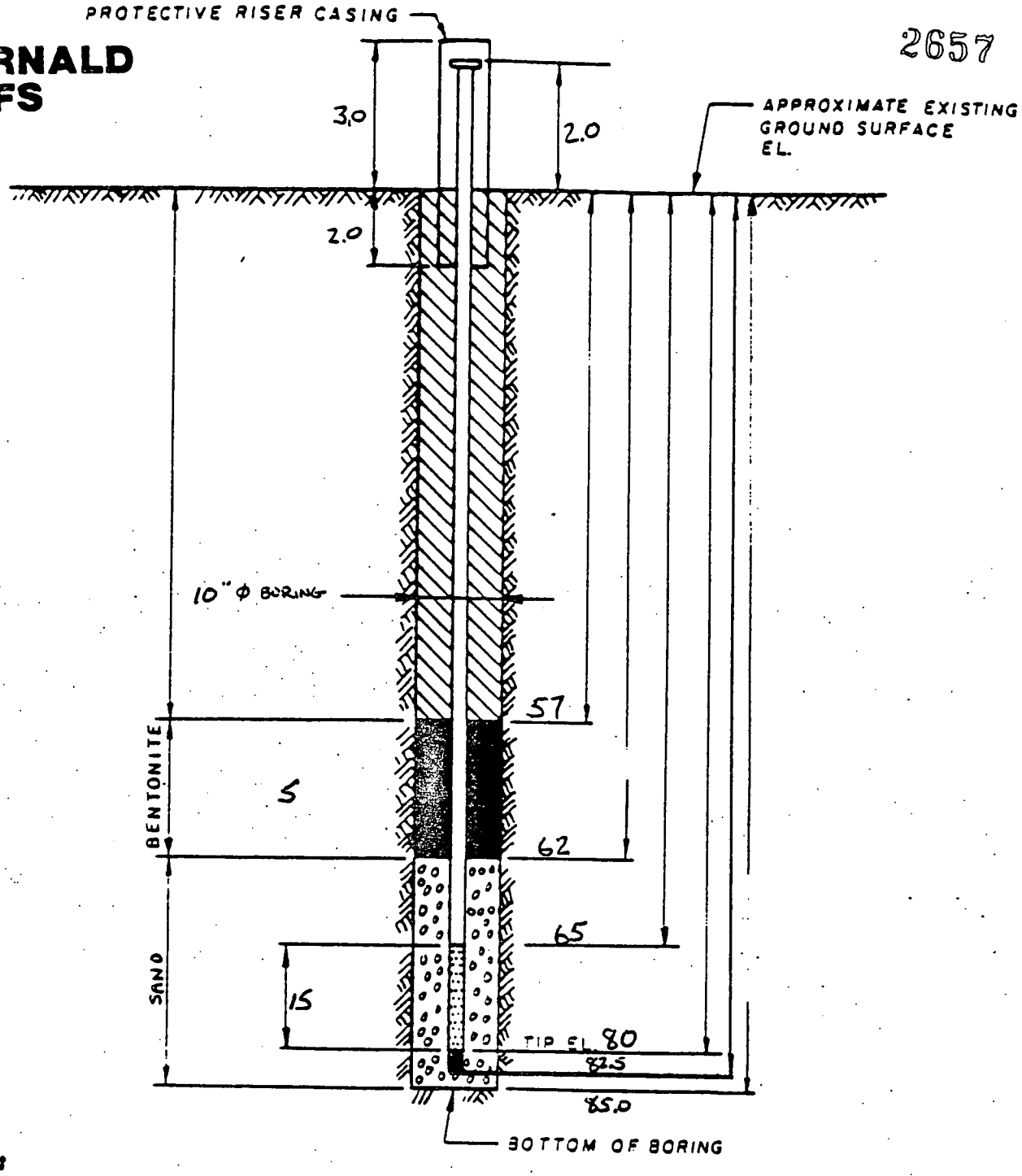

NOTES:

1. RISER PIPE IS 4 IN I.D. SCHEDULE 5 PIPE, THREADED, FLUSH-JOINTED.
2. SCREEN IS 4 IN I.D S.S. PIPE CONTINUOUS SLOT SCREEN (0.010 IN. SLOT SIZE).
3. LOWER END OF SCREEN IS CAPPED.
4. ELEVATION OF WATER LEVEL 70.5
5. WATER LEVEL READING ON 1-15-88

INSTALLATION DETAILS
MONITORING WELL 264

PREPARED FOR

DRAWING NUMBER

CHECKED BY

APPROVED BY

DRAWN BY

11

FERNALD RI/FS

2657

PIEZOMETER INSTALLATION SHEET

PROJECT NAME Fernald RI/FS FIELD ENG./GEO. Lowell Wille DATE 1-15-88
PROJECT NO. 6023.2 CHECKED BY _____ DATE _____
BORING NO. B264
PIEZOMETER NO. MW 264 DATE OF INSTALLATION _____

BOREHOLE DRILLING

DRILLING METHOD cable tool
DRILLING FLUID (S) USED:
FLUID WATER FROM 0 TO 80 ft
FLUID NA FROM NA TO NA

TYPE OF BIT drive shoe
CASING SIZE (S) USED: 10 inch
SIZE 10 in FROM 0 TO 85 ft.
SIZE NA FROM NA TO NA

PIEZOMETER DESCRIPTION

TYPE Monitoring well
DIAMETER OF PERFORATED SECTION 4 in
PERFORATION TYPE:
SLOTS ☐ HOLES ☐ SCREEN ☒
AVERAGE SIZE OF PERFORATIONS 0.010 in
TOTAL PERFORATED AREA 15 feet

RISER PIPE MATERIAL stainless steel (316)
RISER PIPE DIAMETERS:
O.D. 4 3/8 I.D. 4 in
LENGTH OF PIPE SECTIONS 10 ft
JOINING METHOD Screw FLUSH JOINT THREADED

PROTECTION SYSTEM

RISER PROTECTIVE PIPE LENGTH 5 ft
PROTECTIVE PIPE O.D. 10 3/4 in

OTHER PROTECTION LOCKING CAP AND LOCK

ITEM	DISTANCE ABOVE/BELOW GROUND SURFACE (FT)		ELEVATION (FT) MSL	
TOP OF RISER PIPE	3.0			
GROUND SURFACE	0.0			
BOTTOM OF PROTECTIVE PIPE	2.0			
BOREHOLE FILL MATERIALS:				
GROUT/SLURRY	TOP 0	BOTTOM 57	TOP	BOTTOM
BENTONITE	TOP 57	BOTTOM 62	TOP	BOTTOM
SAND	TOP 62	BOTTOM 85	TOP	BOTTOM
GRAVEL	TOP NA	BOTTOM NA	TOP	BOTTOM
PERFORATED SECTION	TOP 65	BOTTOM 80	TOP	BOTTOM
PIEZOMETER TIP	82.5			
BOTTOM OF BOREHOLE	85			
GWL AFTER INSTALLATION	705 Jan 15, 1988			

WAS THE PIEZOMETER FLUSHED AFTER INSTALLATION? YES ☐ NO ☒
WAS A SENSITIVITY TEST PERFORMED ON THE PIEZOMETER? YES ☐ NO ☒

12

REMARKS _____

409-11-86

Monitoring Well #128

FERNALD RI/FS

2657

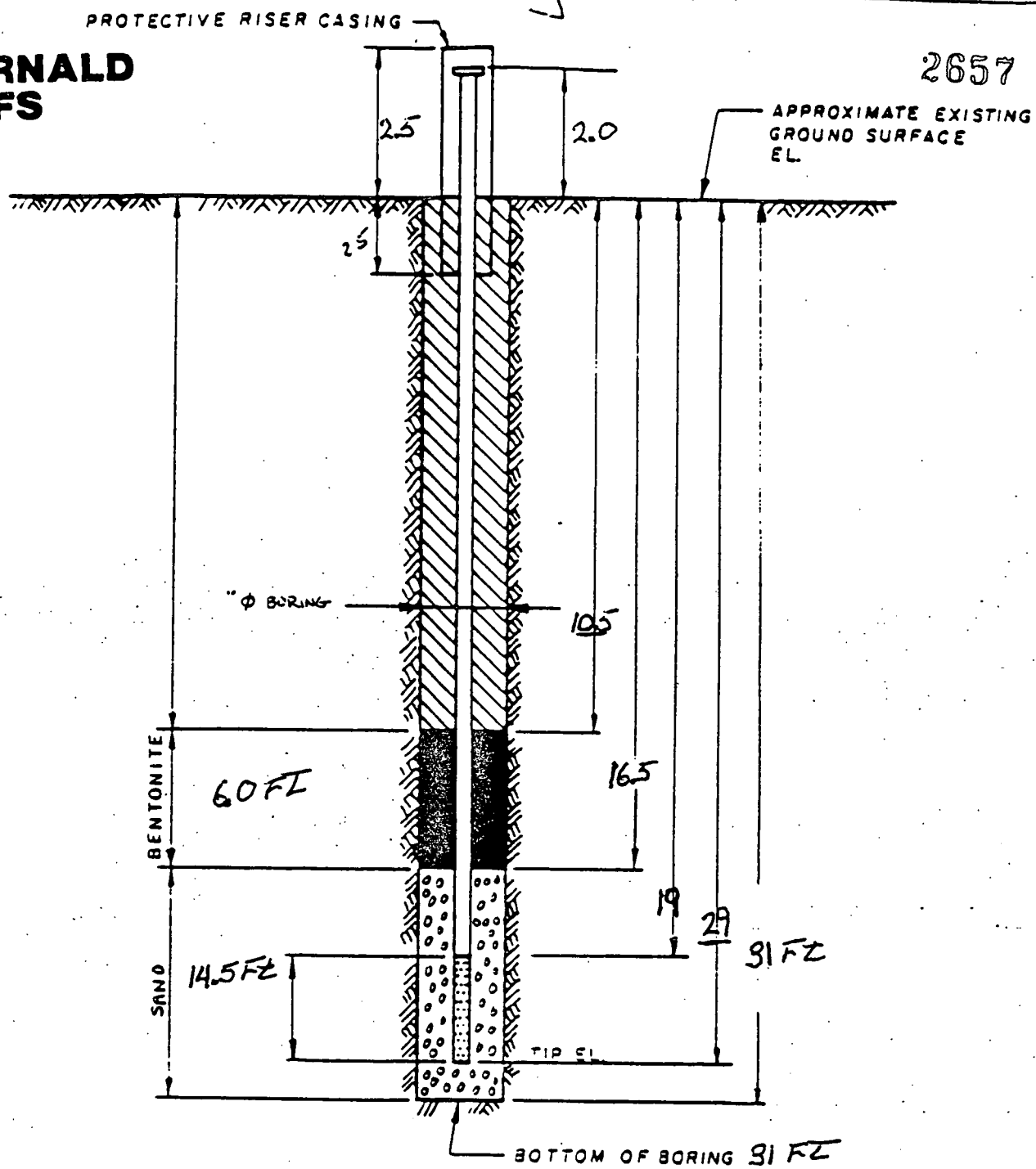

DRAWING NUMBER

CHECKED BY

APPROVED BY

DRAWN BY

NOTES:

1. RISER PIPE IS 4 IN I.D. SCHEDULE PIPE, THREADED, FLUSH-JOINTED.
2. SCREEN IS 4 IN I.D SS PIPE CONTINUOUS SLOT SCREEN (0.010 IN. SLOT SIZE).
3. LOWER END OF SCREEN IS CAPPED.
4. ELEVATION OF WATER LEVEL
5. WATER LEVEL READING ON

INSTALLATION DETAILS
MONITORING WELL 128

PREPARED FOR

FMPC RI/FS

FERNALD RI/FS

2657

PIEZOMETER INSTALLATION SHEET

PROJECT NAME Fernald RI/FS
PROJECT NO. 602
BORING NO. 128
PIEZOMETER NO. N/A

FIELD ENG./GEO. M. Goldberg DATE 01/14/88
CHECKED BY _____ DATE _____
DATE OF INSTALLATION 01/14/88

BOREHOLE DRILLING

DRILLING METHOD Cable Tool
DRILLING FLUID (S) USED:
FLUID water FROM 3 Ft TO 31 Ft
FLUID NA FROM NA TO NA

TYPE OF BIT Flathead
CASING SIZE (S) USED:
SIZE 10" FROM 0 TO 31 Ft
SIZE NA FROM NA TO NA

PIEZOMETER DESCRIPTION

TYPE Monitoring
DIAMETER OF PERFORATED SECTION 4"
PERFORATION TYPE:
SLOTS ☐ HOLES ☐ SCREEN ☒
AVERAGE SIZE OF PERFORATIONS .010 inches
TOTAL PERFORATED AREA 10 Feet

RISER PIPE MATERIAL 316 Stainless Steel
RISER PIPE DIAMETERS:
O.D. 4 3/8" in I.D. 4" in
LENGTH OF PIPE SECTIONS 10 Ft
JOINING METHOD THread and couple
(PLUSH JOINT THREADED)

PROTECTION SYSTEM

RISER PROTECTIVE PIPE LENGTH 5 Ft
PROTECTIVE PIPE O.D. 10" inches

OTHER PROTECTION Lockable cap AND lock

ITEM	DISTANCE ABOVE/BELOW GROUND SURFACE (Feet)		ELEVATION (FT) MSL	
TOP OF RISER PIPE	2.0 Ft			
GROUND SURFACE	0.0			
BOTTOM OF PROTECTIVE PIPE	2.5			
BOREHOLE FILL MATERIALS:				
GROUT/SLURRY	TOP 0	BOTTOM 10.5	TOP	BOTTOM
BENTONITE	TOP 10.5	BOTTOM 16.5	TOP	BOTTOM
SAND	TOP 16.5	BOTTOM 31	TOP	BOTTOM
~~GRAVEL~~	TOP NA	BOTTOM NA	TOP	BOTTOM
PERFORATED SECTION	TOP 19	BOTTOM 29	TOP	BOTTOM
PIEZOMETER TIP	NA			
BOTTOM OF BOREHOLE	31 Ft			
GWL AFTER INSTALLATION	NA			

WAS THE PIEZOMETER FLUSHED AFTER INSTALLATION? YES ☐ NO ☒
WAS A SENSITIVITY TEST PERFORMED ON THE PIEZOMETER? YES ☐ NO ☒

14

REMARKS _____

409-11-86

BORING 199 #A0

2657

FERNALD RI/FS

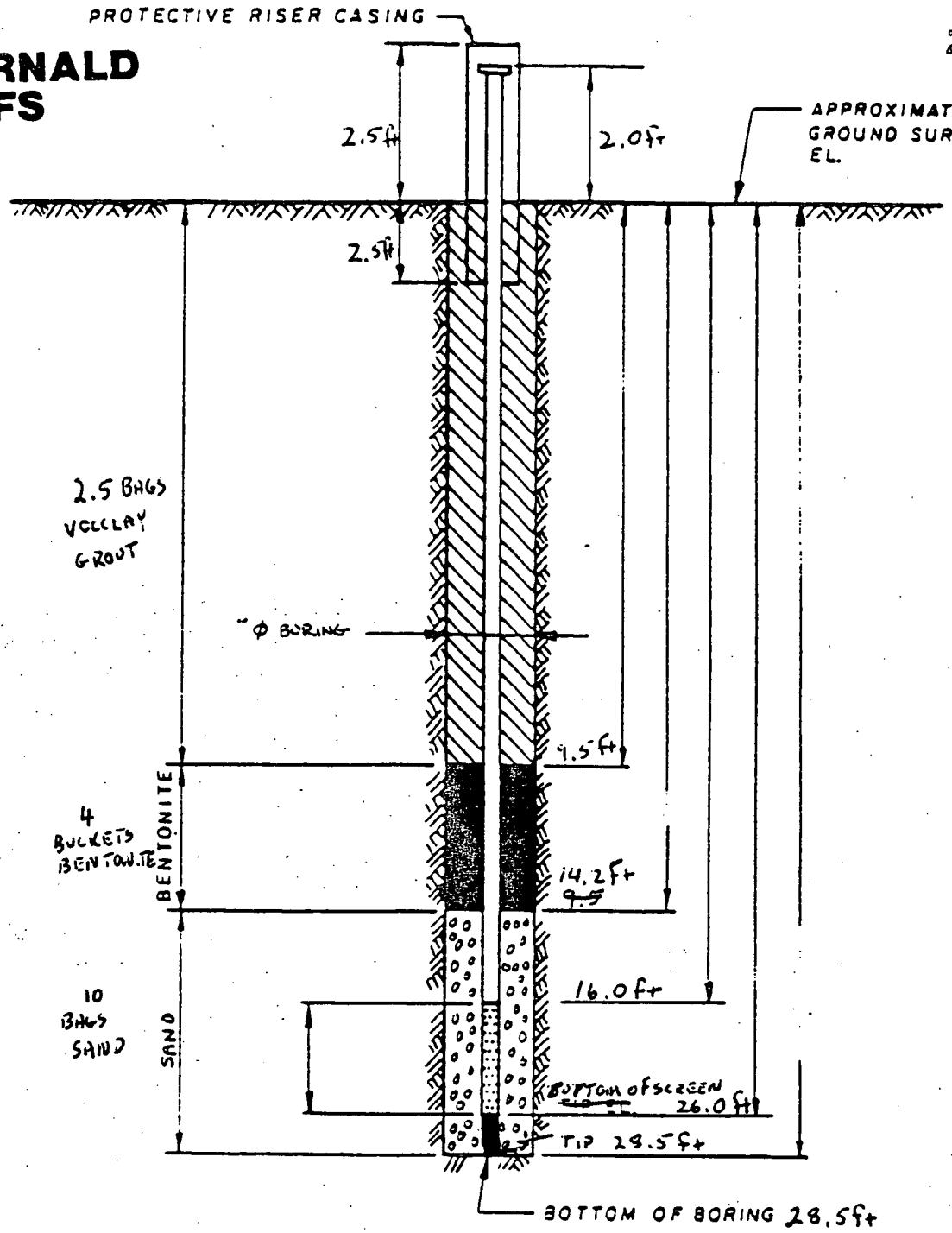

DRAWING NUMBER

CHECKED BY

APPROVED BY

DRAWN BY

NOTES:

1. RISER PIPE IS IN I.D. SCHEDULE PIPE, THREADED, FLUSH-JOINTED.
2. SCREEN IS IN I.D. PIPE CONTINUOUS SLOT SCREEN (0.010 IN. SLOT SIZE).
3. LOWER END OF SCREEN IS CAPPED.
4. ELEVATION OF WATER LEVEL
5. WATER LEVEL READING ON

INSTALLATION DETAILS
MONITORING WELL 138

PREPARED FOR

FERNALD RI/FS

2657

PIEZOMETER INSTALLATION SHEET

PROJECT NAME FMPC RI/FS FIELD ENG./GEO. W. KEGLEY DATE 01 13 88
PROJECT NO. 607 T3.2 CHECKED BY _____ DATE _____
BORING NO. 138
PIEZOMETER NO. 138 DATE OF INSTALLATION 01 13 88

BOREHOLE DRILLING

DRILLING METHOD CABLE TOOL	TYPE OF BIT FLAT HEAD
DRILLING FLUID (S) USED:	CASING SIZE (S) USED:
FLUID H_2O FROM 0 TO 28.5 feet	SIZE 10 inch FROM 0.0 TO 28.5 feet
FLUID NA FROM NA TO NA	SIZE NA FROM NA TO NA

PIEZOMETER DESCRIPTION

TYPE MONITORING	RISER PIPE MATERIAL 316 STAINLESS STEEL
DIAMETER OF PERFORATED SECTION 4 inch	RISER PIPE DIAMETERS:
PERFORATION TYPE:	O.D. 4 3/8 inch I.D. 4 inch
SLOTS ☐ HOLES ☐ SCREEN ☒	LENGTH OF PIPE SECTIONS 10 feet
AVERAGE SIZE OF PERFORATIONS .010	JOINING METHOD THREADED COUPLE
TOTAL PERFORATED AREA 10 FEET	(FLUSH JOINT THREADED)

PROTECTION SYSTEM

RISER PROTECTIVE PIPE LENGTH 5.0 feet	OTHER PROTECTION LOCKABLE CAP AND LOCK
PROTECTIVE PIPE O.D. 10 inch	

ITEM	DISTANCE ABOVE/BELOW GROUND SURFACE (feet)		ELEVATION (FT) MSL	
TOP OF RISER PIPE	2.0 feet			
GROUND SURFACE	0.0			
BOTTOM OF PROTECTIVE PIPE	2.5 feet			
BOREHOLE FILL MATERIALS:				
GROUT/SLURRY	TOP 0.0 ft	BOTTOM 9.5 ft	TOP	BOTTOM
BENTONITE	TOP 9.5 ft	BOTTOM 14.2 ft	TOP	BOTTOM
SAND	TOP 14.2 ft	BOTTOM 28.5 ft	TOP	BOTTOM
GRAVEL	TOP NA	BOTTOM NA	TOP	BOTTOM
PERFORATED SECTION	TOP 16.0 ft	BOTTOM 26.0 ft	TOP	BOTTOM
PIEZOMETER TIP	28.5 feet			
BOTTOM OF BOREHOLE	28.5 feet			
GWL AFTER INSTALLATION				

WAS THE PIEZOMETER FLUSHED AFTER INSTALLATION? YES ☐ NO ☐
WAS A SENSITIVITY TEST PERFORMED ON THE PIEZOMETER? YES ☐ NO ☐ 16

REMARKS _____

409-11-86

WELL SET #39

2657

FERNALD RI/FS

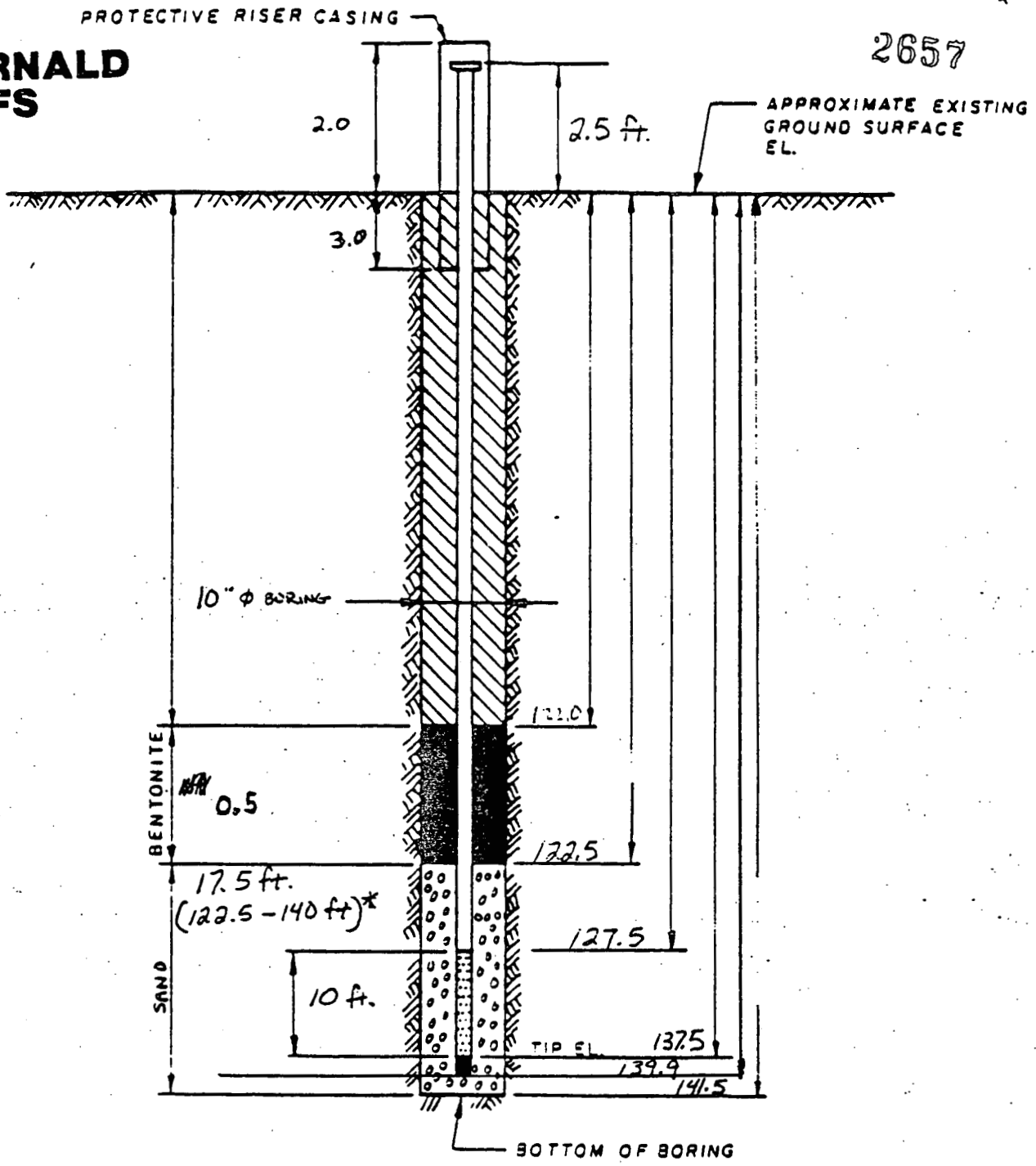

DRAWING NUMBER

CHECKED BY

APPROVED BY

DRAWN BY

NOTES:

1. RISER PIPE IS 4 IN I.D. SCHEDULE PIPE, THREADED, FLUSH-JOINTED.
2. SCREEN IS 4 IN I.D 5.5. PIPE CONTINUOUS SLOT SCREEN (0.010 IN. SLOT SIZE).
3. LOWER END OF SCREEN IS CAPPED.
4. ELEVATION OF WATER LEVEL 72.25 ft.
5. WATER LEVEL READING ON 12/23/87 0915

INSTALLATION DETAILS
MONITORING WELL 364

PREPARED FOR

* Bottom 1.5 ft. of borehole caved in, sand is from 122.5 to 140 ft.

17

FERNALD RI/FS

2657

PIEZOMETER INSTALLATION SHEET

PROJECT NAME Fernald RI/FS FIELD ENG./GEO. T. Sullivan DATE 12/23/87
PROJECT NO. 602.3.2 CHECKED BY _____ DATE _____
BORING NO. 364
PIEZOMETER NO. 364 DATE OF INSTALLATION finished 1-10-88

BOREHOLE DRILLING

DRILLING METHOD Cable Tool
DRILLING FLUID (S) USED: NA
FLUID WATER FROM 0 TO 65 ft.
FLUID NA FROM NA TO NA

TYPE OF BIT FLATHEAD
CASING SIZE (S) USED: NA
SIZE 10" ID FROM 0 TO 141.5 ft.
SIZE NA FROM NA TO NA

PIEZOMETER DESCRIPTION

TYPE Monitoring Well
DIAMETER OF PERFORATED SECTION 4 in.
PERFORATION TYPE:
SLOTS ☐ HOLES ☐ SCREEN ☒
AVERAGE SIZE OF PERFORATIONS 0.010 in.
TOTAL PERFORATED AREA 10 FT

RISER PIPE MATERIAL Stainless steel (316)
RISER PIPE DIAMETERS:
O.D. 4 3/8 I.D. 4 in.
LENGTH OF PIPE SECTIONS 10 ft.
JOINING METHOD Screw. FLUSH JOINT THREADS.

PROTECTION SYSTEM

RISER PROTECTIVE PIPE LENGTH 5 ft.
PROTECTIVE PIPE O.D. 10 3/4 in.

OTHER PROTECTION LOCKING CAP AND LOCK.

ITEM	DISTANCE ABOVE/BELOW GROUND SURFACE (ft.)		ELEVATION (FT) MSL	
TOP OF RISER PIPE	2.5			
GROUND SURFACE	0.0			
BOTTOM OF PROTECTIVE PIPE	3.0			
BOREHOLE FILL MATERIALS:				
GROUT/SLURRY	TOP 2.0	BOTTOM 122.5	TOP	BOTTOM
BENTONITE	TOP NA	BOTTOM NA	TOP	BOTTOM
SAND	TOP 122.5	BOTTOM 141.5	TOP	BOTTOM
GRAVEL	TOP NA	BOTTOM NA	TOP	BOTTOM
PERFORATED SECTION	TOP 127.5	BOTTOM 137.5	TOP	BOTTOM
PIEZOMETER TIP	139.9			
BOTTOM OF BOREHOLE	141.5			
GWL AFTER INSTALLATION	72.25 (12/23, 0915) 71.7 1-10-88 1515			

WAS THE PIEZOMETER FLUSHED AFTER INSTALLATION? YES ☐ NO ☒
WAS A SENSITIVITY TEST PERFORMED ON THE PIEZOMETER? YES ☐ NO ☒

18

REMARKS _____

409-11-86

Monitoring Well #125

37

2657

FERNALD RI/FS

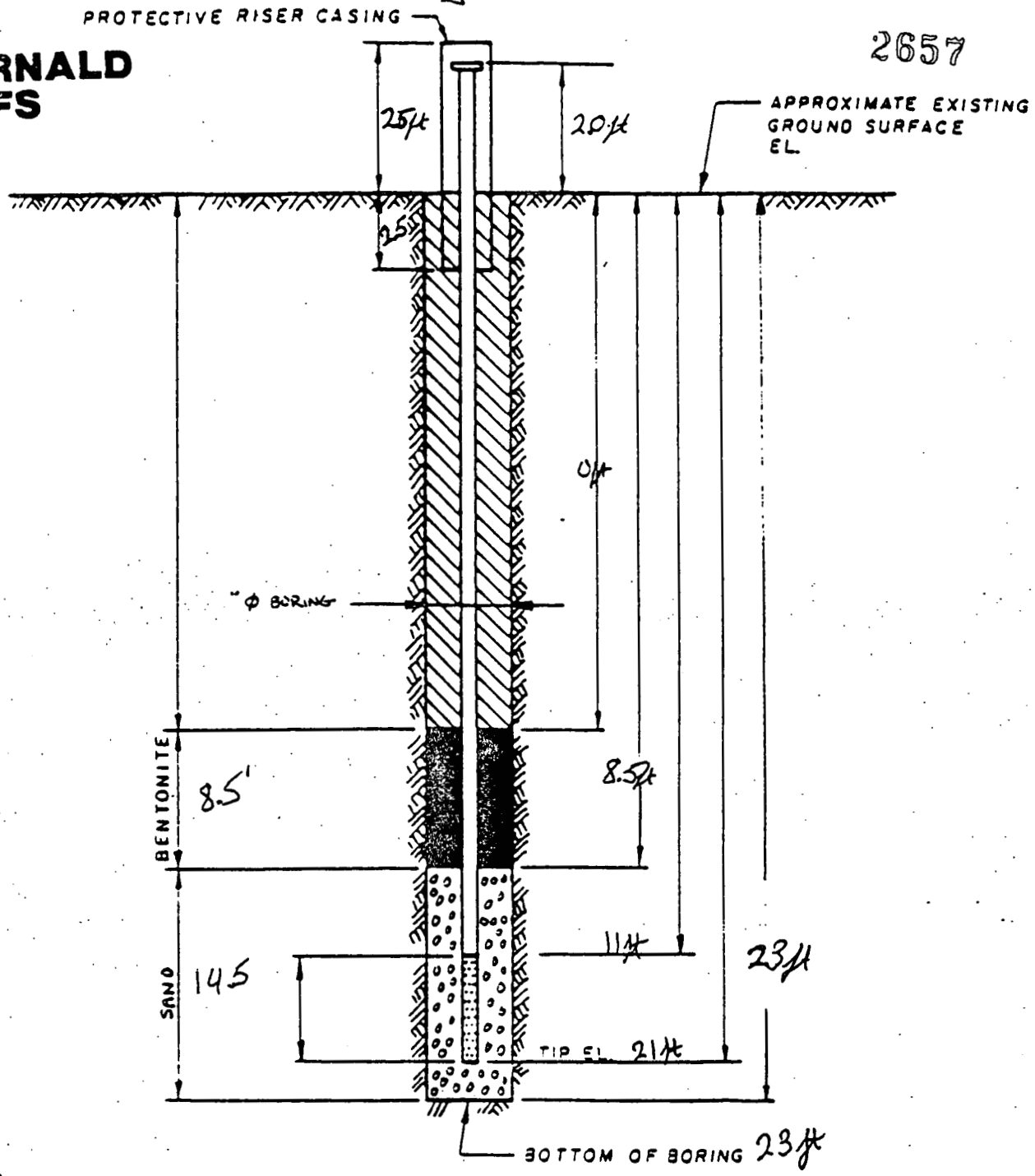

NOTES:

1. RISER PIPE IS 4 IN I.D. SCHEDULE PIPE, THREADED, FLUSH-JOINTED.
2. SCREEN IS 4 IN I.D SS PIPE CONTINUOUS SLOT SCREEN (0.010 IN. SLOT SIZE).
3. LOWER END OF SCREEN IS CAPPED.
4. ELEVATION OF WATER LEVEL
5. WATER LEVEL READING ON

INSTALLATION DETAILS
MONITORING WELL 125

PREPARED FOR

23
8.5
14.5

Gravel From 23 - 8.5 ft
Bentonite From 8.5 - surface

19

DRAWING NUMBER

CHECKED BY

APPROVED BY

DRAWN BY

FERNALD RI/FS

2657

PIEZOMETER INSTALLATION SHEET

PROJECT NAME Fernald RI/FS FIELD ENG./GEO. M. Goldberg DATE 01/08/88
PROJECT NO. 602 CHECKED BY _____ DATE _____
BORING NO. 125
PIEZOMETER NO. 125 DATE OF INSTALLATION 01/08/88

BOREHOLE DRILLING

DRILLING METHOD Cable Tool
DRILLING FLUID (S) USED:
FLUID Water FROM 3 ft TO 23
FLUID NA FROM NA TO NA

TYPE OF BIT Flathead
CASING SIZE (S) USED:
SIZE 10" FROM 0 TO 23 ft
SIZE NA FROM NA TO NA

PIEZOMETER DESCRIPTION

TYPE Monitoring
DIAMETER OF PERFORATED SECTION 4"
PERFORATION TYPE:
SLOTS ☐ HOLES ☐ SCREEN ☒
AVERAGE SIZE OF PERFORATIONS .010 inch
TOTAL PERFORATED AREA 10 ft

RISER PIPE MATERIAL 316 Stainless Steel
RISER PIPE DIAMETERS:
O.D. 4 3/8 in I.D. 4 in
LENGTH OF PIPE SECTIONS 10 ft
JOINING METHOD Thread and couple (FLUSH JOINT THREADED)

PROTECTION SYSTEM

RISER PROTECTIVE PIPE LENGTH 5 ft
PROTECTIVE PIPE O.D. 10" in

OTHER PROTECTION Lockable cap AND LOCK.

ITEM	DISTANCE ABOVE/BELOW GROUND SURFACE (FT)		ELEVATION (FT) MSL	
TOP OF RISER PIPE	2.0 ft			
GROUND SURFACE	0.0			
BOTTOM OF PROTECTIVE PIPE	2.5 ft			
BOREHOLE FILL MATERIALS:				
GROUT/SLURRY	TOP N/A	BOTTOM N/A	TOP	BOTTOM
BENTONITE	TOP 0 ft	BOTTOM 8.5	TOP	BOTTOM
SAND	TOP 8.5 ft	BOTTOM 23 ft	TOP	BOTTOM
~~GRAVEL~~	TOP NA	BOTTOM NA	TOP	BOTTOM
PERFORATED SECTION	TOP 11.0	BOTTOM 22.0	TOP	BOTTOM
PIEZOMETER TIP	N/A			
BOTTOM OF BOREHOLE	23			
GWL AFTER INSTALLATION	NA			

WAS THE PIEZOMETER FLUSHED AFTER INSTALLATION? YES ☐ NO ☒
WAS A SENSITIVITY TEST PERFORMED ON THE PIEZOMETER? YES ☐ NO ☒

20

REMARKS

409-11-86

FERNALD RI/FS

738-6049

2657

VISUAL CLASSIFICATION OF SOILS

PROJECT NUMBER: 602	PROJECT NAME: FMPC RI/FS	
BORING NUMBER: 224	COORDINATES:	DATE: NA
ELEVATION:	GWL: Depth Date/Time	DATE STARTED:
ENGINEER/GEOLOGIST: W. REGLEY B DUNNING	Depth Date/Time	DATE COMPLETED: 10-29-87
DRILLING METHODS: CABLE TOOL		PAGE 1 OF 1

DEPTH (FT)	SAMPLE TYPE & NO.	BLOWS ON SAMPLER PER (6 IN.)	RECOVERY (IN)	DESCRIPTION	USCS SYMBOL	MEASURED CONSISTENCY (TSF)	REMARKS
0							
5.0							
10.0							
15.0				FOR DESCRIPTION OF SOILS ENCOUNTERED IN WELL 224 SEE VISUAL CLASSIFICATION OF SOILS FOR WELL NO 324			NO SAMPLES collected DURING BORING OPERATIONS
20.0							
25.0							
30.0							
35.0							
40.0							
45.0							
50.0							
55.0							
60.0							
65.0							
70.0				70.1 BOTTOM OF BORING AT 70.1 FEET			
75.0							

NOTES:

1. DRILLING CONTRACTOR PENNSYLVANIA DRILLING
   DRILLER : Tim Harris
   HELPER : Steve Rober
   RIG Speed King 71
2. WATER ADDED TO BORING DURING DRILLING OPERATIONS (1 = 5 gal)
3. SOIL SAMPLING AS per ASTM STANDARD PENETRATION TEST
4. color descriptions AS per MUNSELL
5. FIELD MEASUREMENTS BACKGROUND levels.
   HNu = 0
   γ = 0
   β/α = 40-100

21

402-11-86

FERNALD RI/FS

2657

VISUAL CLASSIFICATION OF SOILS

PROJECT NUMBER: 602	PROJECT NAME: FMPC RI/FS		
BORING NUMBER: 324	COORDINATES:	DATE: 9-14-87	
ELEVATION:	GWL: Depth Date/Time	DATE STARTED: 9-14-87 @ 1330	
ENGINEER/GEOLOGIST: B. Dunning	Depth Date/Time	DATE COMPLETED: 10/3/87	
DRILLING METHODS: CABLE TOOL - Split Spoon Samples		PAGE 1 OF 11	

DEPTH (Ft.)	SAMPLE TYPE & NO.	BLOWS ON SAMPLER PER 6"	RECOVERY (Inches)	DESCRIPTION	USCS SYMBOL	MEASURED CONSISTENCY (TSF)	REMARKS
.5 1.0'	S 07089	5 11 10	12"	Medium stiff, yellowish-brown clay with some sand, moist	CL		Background Gas $\gamma\beta$ = 40-60 α=0 hnu=0 Sample Caught (1345)
2' 3'	S 07090	12 17 19	24"	Stiff, dark yellowish-brown silty sand with some fine gravel moist	SM		Background Levels (1400)
4'	S 07091	12 25 32	18	Medium dense dark yellowish-brown silty sand with some gravel moist; 4.3' Coarse Gravel - yellowish-brown	SP / GW		Background Levels (1440)
5' 6'	S 07092	22 12 15	14"	Medium dense dark yellowish-brown silty sandy gravel, moist. 5.5' Stiff yellowish-brown silty clay, moist	GC / CL		Background Levels (1445)
7'	S 07093	10 21 23	16"	Dense yellowish-brown silty gravel grading downward to a: 7' Hard dark gray clay with a trace of coarse sand and gravel moist 7'	GC / CL	4.5	Background Levels (1545)
8' 9'	S 07095	16 19 23	12"	Very stiff gray clay with a trace of fine gravel (slightly damp) moist.	CL	4.0	Background Levels End of Day 9-14-87 (1625)
10'	S 07096	6 11 15	6"	Medium dense, grayish-brown gravel moist.	GC		Start of Day 9-15-87 gravel is actually very loosely consolidated Background (0830)
11' 12'	S 07097	4 5 8	12"	Medium stiff olive-gray clay with a trace of fine gravel, moist.	CL	1.0	Background Lost entire first sample and had to use spring catcher (0935)
13	S 07098	6 11 17	18"	13.2' Loose gray, fine sand, moist. 13.2.	CL / SM	.75	Background (0942)
14' 15'	S 07100	2 2 3	18"	Soft olive-gray clay with a trace of fine gravel, moist.	CL	.50	Background (1030)

NOTES: Background Levels 9-14-87 $\gamma\beta$ = 40-140 cpm α=0 hnu=0

Background Levels 9-15-87 $\gamma\beta$ = 40-80 cpm α=0 hnu=0

Used 40 gallons of H_2O 9-14-87

402-11-86

FERNALD RI/FS

VISUAL CLASSIFICATION OF SOILS

PROJECT NUMBER: 602	PROJECT NAME: FMPC RI/FS		
BORING NUMBER: 324	COORDINATES:	DATE: 9-17-87	
ELEVATION:	GWL: Depth 41.2 Date/Time 9-17-87 @ 1730	DATE STARTED: 9-14-87	
ENGINEER/GEOLOGIST: B. Dunning	Depth Date/Time	DATE COMPLETED: 10-3-87	
DRILLING METHODS: CABLE TOOL		PAGE 3 OF 11	

DEPTH (Ft.)	SAMPLE TYPE & NO.	BLOWS ON SAMPLER PER (6")	RECOVERY (Inch)	DESCRIPTION	USCS SYMBOL	MEASURED CONSISTENCY (TSF)	REMARKS
30'							Start Day 9-17-87
31'	S 07112	12 20 24	6"	Stiff olive gray clay with a trace of fine gravel moist	CL	2.0	Background Levels (1045)
32' 33'	S 07113	10 11 16	18"	Very stiff gray clay with trace of gravel. moist			Background Levels - (B.G.) (1050)
34'	S 07114	10 25 37	24"	33.7 Stiff gray clay moist 33.7 34 Very stiff olive-yellow clay moist 34' Very dense yellow-brownish sand moist		1.5 4.0	B.G. (1105)
35' 36'	S 07115	23 33 36	12"	Very dense yellowish-brown Sand moist.	SW	–	B.G. Sand is moist, but not saturated. (1400)
37'	S 07116	50 – –	9"	37' Medium stiff brownish-yellow silt clayey moist 37'	SM	–	B.G. (1530)
38' 39'	S 07117	9 24 42	13"	Very dense yellowish-brown, well sorted, fine grain sand Moist, but basiclly dry.			B.G. Very friable Sand Actually (1555)
40' 41' 42' 43' 44'					SW	–	Begin catching 5' Samples. Loose Unconsolidated Sand
45'	S 07118	25 43 45	18"				B.G. Sample 44'-45.5' End Day 9-17-87 1715

NOTES: Background Levels for 9-17-87 γB = 40-60 cpm, α = 0 hnu = 0

402-11-86

FERNALD RI/FS

2657

VISUAL CLASSIFICATION OF SOILS

PROJECT NUMBER: 602	PROJECT NAME: FMPC RI/FS		
BORING NUMBER: 324	COORDINATES:	DATE: 9-18-87	
ELEVATION:	GWL: Depth Date/Time	DATE STARTED: 9-14-87	
ENGINEER/GEOLOGIST: B. Dunning	Depth Date/Time	DATE COMPLETED: 10-3-87	
DRILLING METHODS: Cable Tool		PAGE 4 OF 11	

DEPTH (Ft.)	SAMPLE TYPE & NO.	BLOWS ON SAMPLER PER (6")	RECOVERY (Inch)	DESCRIPTION	USCS SYMBOL	MEASURED CONSISTENCY (TSF)	REMARKS
45'	07118	25 43 45	18"	SAND - As Described above	SW		End Day 9-17-87 (1715)
46' 47' 48' 49' 50'				Very dense yellowish-brown well sorted fine grain sand moist.	SW	-	Start Day 9-18-87
51'	S 07119	15 20 21	18"	Dense yellowish-brown, well sorted, damp, but not wet sand			B.G. Loose unconsolidated Sand (1345)
52' 53' 54' 55'							
56'	S 07120	13 27 (4") 50	12"	55.8 Loose grayish-brown coarse sand, moist 55.8			B.G.
				56.1 Hard gray clay moist. 56.1	CL		(1415)
57' 58'	S 07121	13 23 43	12"	Very dense gray, salt & pepper looking, medium to coarse grain sand with trace of fine gravel. moist	SW		B.G. Sand is actually loose & unconsolidated. (1440)
59' 60'							

NOTES:

24

402-11-86

FERNALD RI/FS

2657

VISUAL CLASSIFICATION OF SOILS

PROJECT NUMBER: 602	PROJECT NAME: FMPC RI/FS	
BORING NUMBER: 324	COORDINATES:	DATE: 9-19-87
ELEVATION:	GWL: Depth 51.6 Date/Time 9-19/1030	DATE STARTED: 9-14-87
ENGINEER/GEOLOGIST: B. Dunning	Depth 62.6 Date/Time 9-19/1730	DATE COMPLETED: 10-3-87
DRILLING METHODS:		PAGE 5 OF 11

DEPTH (FT.)	SAMPLE TYPE & NO.	BLOWS ON SAMPLER PER (6")	RECOVERY (Inch)	DESCRIPTION	USCS SYMBOL	MEASURED CONSISTENCY (TSF)	REMARKS
60'							
61'	S 07122	13 25 28	18"	Very dense, dark gray coarse sand with some fine gravel WET	SW		Background End of 9-18-87 (1515)
62'							~~End~~ Start of 9-19-87
63'							
64'	S 07123	6 3 3	14"	Loose gray, lightly salt & peppered looking fine to coarse grain sand with a trace of gravel WET	SW		Borehole drilled down to 70'. Blow sand came up hole to 63' where this sample was taken. B.G. Levels (1545)
65'							
66'	N None	S 2 2	0"	Sand pump indicates very loose, grayish-brown unconsolidated sand, WET	SM ?		Blow Sand coming into hole. Could not obtain a sample even with catcher End Day 9-19-87
67'							Start Day 9-20-87
68'							
69'							
70'							10" Temporary Casing driven to 80' to cut off blow sand.
71'	S 07124	6 14 21	12"	Dense, gray coarse sand with some fine & coarse gravel. Wet	SP		Background Levels Only
72'							(1000)
73'							Bailer - Sand Pump bringing up large cobbles ie. 1½" x 2½" large - Diameter - ± 1½"
74'							
75'							

NOTES: Background Levels 9-19-87 $\gamma\beta$ = 40-80 α = 0 hnu = 0
" " 9-20-87 $\gamma\beta$ = 40-70 α = 0 hnu = 0

402-11-86

FERNALD RI/FS

2657

VISUAL CLASSIFICATION OF SOILS

PROJECT NUMBER: 602	PROJECT NAME: FMPC RI/FS		
BORING NUMBER: 324	COORDINATES:	DATE: ~~9-19-87~~ & 9-20	
ELEVATION:	GWL: Depth 61.5' Date/Time 9-20/0900	DATE STARTED: 9-14-87	
ENGINEER/GEOLOGIST: B. Dunning	Depth Date/Time	DATE COMPLETED: 10-3-87	
DRILLING METHODS: Cable Tool		PAGE 6 OF 11	

DEPTH (FT.)	SAMPLE TYPE & NO.	BLOWS ON SAMPLER PER (6")	RECOVERY (Trun)	DESCRIPTION	USCS SYMBOL	MEASURED CONSISTENCY (TSF)	REMARKS
75'							
76'	S 07125	16 31 46	14"	Very dense grayish-brown gravel (Color: 2.5 Y, 5/2) and Coarse Sand See Remarks →	GP		Background Levels (B.G.) (1140)
77'							Sand pump collecting large carbonate cobbles & gravel rocks with fossil Inclusions.
78'							
79'							
80'							
81'	S 07126	2 6 16	18"	Medium dense, gray, very coarse grain sand with some fine gravel 80.8 / 80.8 Medium dense grayish-brown fine gravel with some coarse gravel	SW / GW		Background levels (1350)
82'							Drove 10" Temporary Casing to 90'
83'							Sand Pump bringing up fine to coarse gravel
84'							
85'							
86'	S 07127	20 50 (3")-50	12"	Very dense, dark gray, sandy gravel with fine to coarse sand. (Color: 2.5 Y, N4/) & large cobbles ie. 1" x 2" x 1½".	GP		large rock jammed in Split Spoon. Actually a loose gravel. Background levels (1600)
87'							
88'							
89'							
90'							

NOTES: Background levels 9-20-87 : $\gamma\beta$ = 40-75 cpm. α = 0, hnu = 0

402-11-86

FERNALD RI/FS

2657

VISUAL CLASSIFICATION OF SOILS

PROJECT NUMBER: 602	PROJECT NAME: FMPC RI/FS	
BORING NUMBER: 324	COORDINATES:	DATE: 9-20 & 9/21/87
ELEVATION:	GWL: Depth 52' Date/Time 9-20/1400	DATE STARTED: 9-14-87
ENGINEER/GEOLOGIST: B. Dunning	Depth 52' Date/Time 9-21/0730	DATE COMPLETED: 10-3-87
DRILLING METHODS: Cable Tool		PAGE 7 OF 11

DEPTH (FT.)	SAMPLE TYPE & NO.	BLOWS ON SAMPLER PER (6")	RECOVERY (")	DESCRIPTION	USCS SYMBOL	MEASURED CONSISTENCY (TSF)	REMARKS
90'							
91'		2 2 5 3 8 4	0"	Sand Pump collecting fine grain Sand	SW		Lost Sample both times even with Catcher In.
92'							End 9-20-87 Start 9-21-87
93'				93 ± ? — — — ? — — — ?	?		Approximate depth of material change.
94'							
95'				Very Dark Gray, fine gravel with coarse sand (10YR 3/1)	GW		
96'	S 07128	18 29 36	24"	95.5 Dense gray fine to coarse gravel (2.5 Y N5) 95.5	GW GM		Background levels
				96.25 Very dense, grayish-brown silty sand moist. 96.25 (Color: 2.5 Y, 5/2)			1350
97'							
98'							Sand pump quit sucking up sand. Sample Taken.
99'							
100'	S 07129	17 ~~13~~ 20	18"	Very Stiff, dark gray clay moist (Color: 5 Y, 4/1)	CL	3.5	Background levels (1500)
101'							
102'				— — ? — — ? — — ? — —	-?-		
103'							
104'							
105'							

NOTES: Background Levels 9-21-87 β = 40-80 cpm, α = 0, hnu = 0

402-11-86

FERNALD RI/FS

2657

VISUAL CLASSIFICATION OF SOILS

PROJECT NUMBER: 602	PROJECT NAME: FMPC RI/FS		
BORING NUMBER: 324	COORDINATES:	DATE: 9-22-87	
ELEVATION:	GWL: Depth 52' Date/Time 9-21/1700	DATE STARTED: 9-14-87	
ENGINEER/GEOLOGIST: B. Dunning	Depth 64.5' Date/Time 9-22/1550	DATE COMPLETED: 10-3-87	
DRILLING METHODS: CABLE TOOL	92' 9-22/1715	PAGE 8 OF 11	

DEPTH (FT.)	SAMPLE TYPE & NO.	BLOWS ON SAMPLER PER (6")	RECOVERY (INCH)	DESCRIPTION	USCS SYMBOL	MEASURED CONSISTENCY (TSF)	REMARKS
105'							
106'	S 07130	6 7 14	6"	Medium dense, grayish-brown fine grain, well graded, silty Sand (Color: 2.5 Y, 5/2)	SM		Background levels (1620)
107'							End 9-21-87
108'							
109'							
110'							
111'	S 07131	6 10 11	12"	111.4' Soft, dark gray silty clay (Color: 5Y, 4/2) 111.4'	CL		Background levels (1035)
112'						~~.95~~ .5	
113'							Picking Up clay On hammer 113'-115'
114'							
115'				Medium Stiff, Olive-Gray Clay (5Y, 4/2) 115.5' 115.5'			
116'	S 07132	9 14 18	18"	Very Stiff, olive gray clay (Color: 5Y, 4/2)	CL	.75 3.5	Background levels (1338)
117'							Casing Driven Down To 120'
118'							
119'							
120'							

NOTES: Background Levels 9-22-87: γB = 40-80 cpm, α = 0, hnu = 0

402-11-86

FERNALD RI/FS

2657

VISUAL CLASSIFICATION OF SOILS

PROJECT NUMBER: 602	PROJECT NAME: FMPC RI / FS		
BORING NUMBER: 324	COORDINATES:	DATE: 9/22 & 9/23/87	
ELEVATION:	GWL: Depth 64.5' Date/Time 9-22/1550	DATE STARTED: 9-14-87	
ENGINEER/GEOLOGIST: B. Dunning	Depth 92' Date/Time 9-22/1715	DATE COMPLETED: 10-3-87	
DRILLING METHODS: CABLE TOOL	75' 9-23/1750	PAGE 9 OF 11	

DEPTH (Ft.)	SAMPLE TYPE & NO.	BLOWS ON SAMPLER PER (6")	RECOVERY (Inch)	DESCRIPTION	USCS SYMBOL	MEASURED CONSISTENCY (TSF)	REMARKS
120'							
121'	8 07133	2 3 6	18"	Medium Stiff, gray (5Y, 5/1) to Olive gray (5Y, 5/2) clay with some fine gravel wet	CL		Moderately gravelly Sand. Background levels (1650)
122'							End Day 9-22-87 Start Day 9-23-87
123'				123.5'			
124'							Noticed Sand & Gravel On Sticking On Hammer
125'							
126'	9 07134	27 17 10	6"	Medium Dense, Olive-~~Gray~~-Brown, fine to coarse gravel wet (Color: 2.5 Y, 4/4)	GP		Scanned - Background Readings Only (1025)
127'							
128'							
129'							
130'							
131'	9 07135	18 33 19	5"	Very Dense, Olive-Brown Fine Gravel (Color: 2.5 Y, 4/4) wet	GW		Background levels. Spoon Plugged with light Olive-brown carbonate rock fragment (2.5 Y, 5/4) (1108)
132'							132' Drilling became more difficult Lithology Change
133'							
134'							Drilled Down To 135' & Sand blew In To 124'
135'							Drive 10" Cog to 140'

NOTES: Water Level checked at 1550, 9-22-87 when temporary Casing was at 121'.

Background Levels 9-23-87: $\gamma\beta$ = 40-120 cpm hnu = 0, α = 0

Smelled Some Brackish, Semi-Petroliferous odor observed at 125'

Hole Monitored with LLE & hnu. No Readings Detected.

29

402-11-86

FERNALD RI/FS

2657

VISUAL CLASSIFICATION OF SOILS

PROJECT NUMBER: 602	PROJECT NAME: FMPC RI / FS	
BORING NUMBER: 324	COORDINATES:	DATE: 9-24-87 / 9-29-87
ELEVATION:	GWL: Depth 66.4' Date/Time 9-24 / 1245	DATE STARTED: 9-14-87
ENGINEER/GEOLOGIST: B. Dunning	Depth 58.5 Date/Time 9/29 / 0900	DATE COMPLETED: 10-3-87
DRILLING METHODS: CABLE TOOL		PAGE 10 OF 11

DEPTH (Ft.)	SAMPLE TYPE & NO.	BLOWS ON SAMPLER PER (6")	RECOVERY (Inch)	DESCRIPTION	USCS SYMBOL	MEASURED CONSISTENCY (TSF)	REMARKS
135'							End Day 9-23-87
136'		#1 #2 11 5 13 7 14 10	0"				Start Day 9-24-87 Attempted twice to obtain sample.
137'							Sand Pump indicates Fine Sand
138'							
139'							Drilled Down to 140', but sand blew in to 135'. Drive Csg to 145'
140'							
141'	S 07136	#1 50-(4") #2 45 (2")-50	12"	Very Dense, Very Dark Grayish-Brown Sand & Fine Gravel wet (Color: 2.5 Y, 3/2)	SW		B.G. Felt we hit a Rock (1115)
142'							
143'							Hammer Driving Hard Feels like we were pounding a large rock.
144'							
145'							End Day 9/24
146'	S 07137	38 (3") 50	12"	Very Dense, very dark brownish-gray sand with fine gravel, generally as above (Color: 2.5 Y, 3/2) wet	SP		Start Day 9/29 Background - Scanned. (1050)
147'							
148'							
149'							
150'							

NOTES: Water level with Csg at 145' 9-24 @ 1245 = 66.4'
" " " " " " 9-29 @ 58.5' after well sitting 4 days

Background Levels 9/29/87 : $\gamma\beta$ = 60-120
α = 0
hnu = 0

30

402-11-86

FERNALD RI/FS

2657

VISUAL CLASSIFICATION OF SOILS

PROJECT NUMBER: 602	PROJECT NAME: FMPC RI/FS		
BORING NUMBER: 324	COORDINATES:	DATE: 9-29-87	
ELEVATION:	GWL: Depth 60.7 Date/Time 9-29/1615	DATE STARTED: 9-14-87	
ENGINEER/GEOLOGIST: B. Dunning	Depth 58.6 Date/Time 9-30/1340	DATE COMPLETED: 10-3-87	
DRILLING METHODS: CABLE TOOL		PAGE 11 OF 11	

DEPTH (Ft.)	SAMPLE TYPE & NO.	BLOWS ON SAMPLER PER (6")	RECOVERY (in)	DESCRIPTION	USCS SYMBOL	MEASURED CONSISTENCY (TSF)	REMARKS
150							
151'	S 07138	20 37 (4")50	14"	Medium Dense, Gray Silty Sand grading downwards into: (Color 2.5 Y, N5/) 150.6	SM		Scanned - Background levels (1415)
152'				Very Dense, black fine gravel wet (Color: 2.5 Y, N2/)	GW		
153'							
154'							
155'							BOB.
156'	S 07139	7 22 45	18"	Very Dense, Dark gray coarse Sand w/ some fine gravel wet (Color: 5 Y, 4/1)			Scanned - Background levels (1540)
157'				Bottom of Borehole (10") = 155' Bottom of 1st Split Spoon = 156.5'			
158'							
159'							
160'							

NOTES: Blow Sand coming into hole with Csg @ 150'. to a depth of 147'
10" Csg Driven to 155' to obtain 150-151.5' Split Spoon Sample.

Used a total of 500 gallons to Drill Entire Well.

31

402-11-86

WELL # 324

FERNALD RI/FS

2657

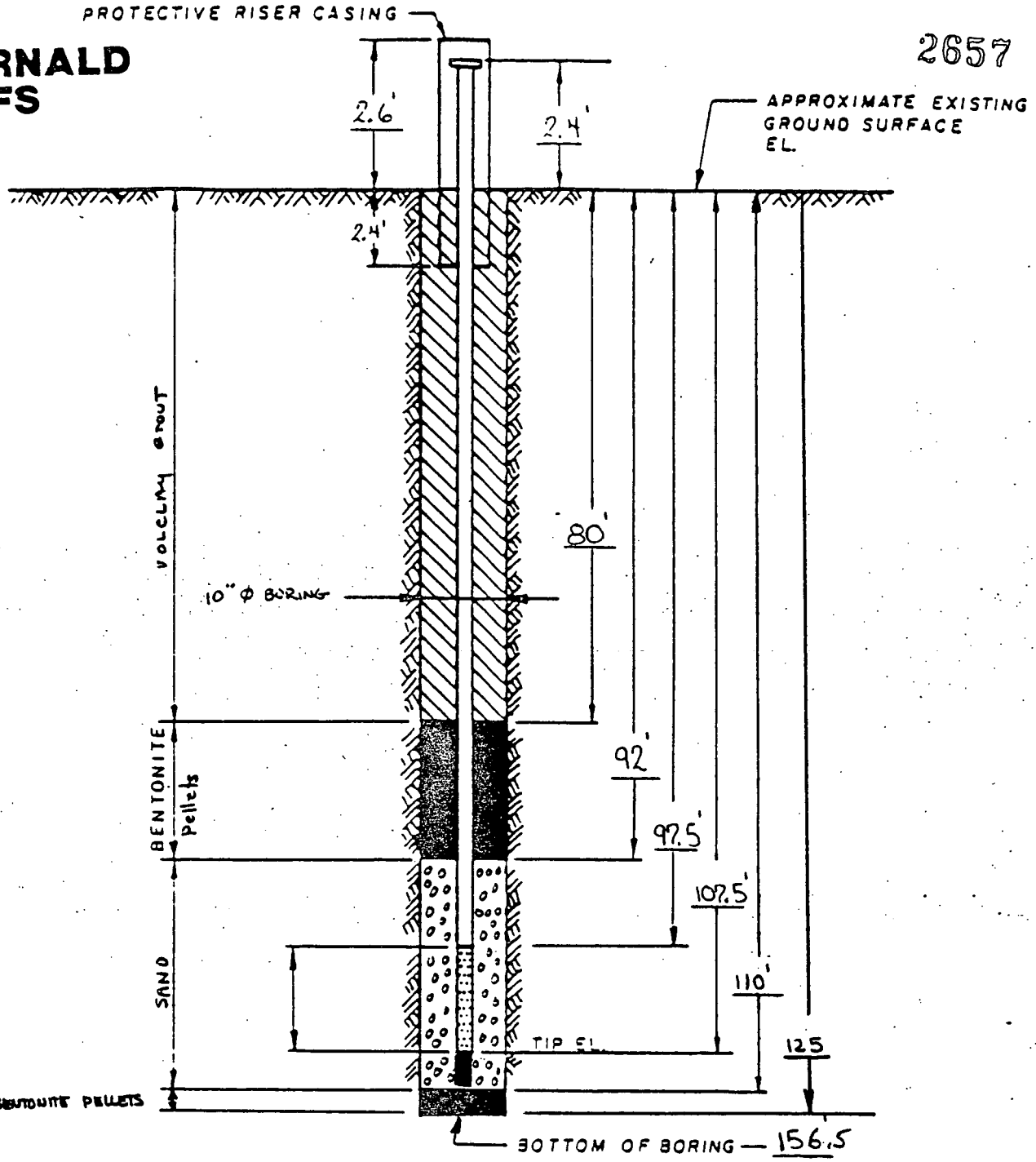

NOTE: HOLE WAS ALLOWED TO COLLAPSE TO 125'. PLUGGED WITH BENTONITE 125'-110'.

NOTES:

1. RISER PIPE IS 4 IN I.D. SCHEDULE PIPE, THREADED, FLUSH-JOINTED.
2. SCREEN IS 4 IN I.D. SS PIPE CONTINUOUS SLOT SCREEN (0.010 IN. SLOT SIZE).
3. LOWER END OF SCREEN IS CAPPED.
4. ELEVATION OF WATER LEVEL
5. WATER LEVEL READING ON

INSTALLATION DETAILS
MONITORING WELL 324

PREPARED FOR

FMPC RI/FS

DRAWING NUMBER

CHECKED BY

APPROVED BY

DRAWN BY

FERNALD RI/FS

2657

PIEZOMETER INSTALLATION SHEET

PROJECT NAME FMPC RI/FS FIELD ENG./GEO. B. Dunning DATE 10/16/87
PROJECT NO. 602 CHECKED BY _____ DATE _____
BORING NO. 324
PIEZOMETER NO. ~~324~~ 324 DATE OF INSTALLATION 10-3-87

BOREHOLE DRILLING

DRILLING METHOD Cable Tool
DRILLING FLUID (S) USED:
FLUID H_2O FROM 0 TO 155'
FLUID NA FROM NA TO NA

TYPE OF BIT Hammer
CASING SIZE (S) USED:
SIZE 10" FROM 0' TO 155'
SIZE NA FROM NA TO NA

PIEZOMETER DESCRIPTION

TYPE Stainless Steel monitoring well
DIAMETER OF PERFORATED SECTION 4"
PERFORATION TYPE:
SLOTS ☐ HOLES ☐ SCREEN ☒
AVERAGE SIZE OF PERFORATIONS .010"
TOTAL PERFORATED AREA 10'

RISER PIPE MATERIAL Stainless Steel (316)
RISER PIPE DIAMETERS:
O.D. 4 3/8" I.D. 4"
LENGTH OF PIPE SECTIONS 10'
JOINING METHOD Flush Joint Threaded

PROTECTION SYSTEM

RISER PROTECTIVE PIPE LENGTH 5'
PROTECTIVE PIPE O.D. 10"

OTHER PROTECTION LOCKING CAP AND LOCK

ITEM	DISTANCE ABOVE/BELOW GROUND SURFACE (Ft.)		ELEVATION (FT) MSL	
TOP OF RISER PIPE	+ 2.4'			
GROUND SURFACE	0.0			
BOTTOM OF PROTECTIVE PIPE	- 2.4'			
BOREHOLE FILL MATERIALS:				
GROUT/SLURRY	TOP 0	BOTTOM 80'	TOP	BOTTOM
BENTONITE	TOP 80'	BOTTOM 92'	TOP	BOTTOM
SAND	TOP 92	BOTTOM 110'	TOP	BOTTOM
BENTONITE PELLETS	TOP 110'	BOTTOM 125'	TOP	BOTTOM
PERFORATED SECTION	TOP 97.5'	BOTTOM 107.5'	TOP	BOTTOM
PIEZOMETER TIP	~~NA~~ ~110'			
BOTTOM OF BOREHOLE	155.5			
GWL AFTER INSTALLATION	58'			

WAS THE PIEZOMETER FLUSHED AFTER INSTALLATION? YES ☐ NO ☑
WAS A SENSITIVITY TEST PERFORMED ON THE PIEZOMETER? YES ☐ NO ☑

33

REMARKS Hole was drilled to 155' to clearly define stratigraphy. Casing was pulled up to 125' and sand-hole was allowed to collapse in. The well was then plugged from 125' to 110' with bentonite to insure that no communication through "Blue Clay" was present. Well was then set ~~from~~ 110'.

409-11-86

#12

FERNALD RI/FS

2657

VISUAL CLASSIFICATION OF SOILS

PROJECT NUMBER: 602.3.2	PROJECT NAME: Fernald RI/FS	
BORING NUMBER: B 264	COORDINATES:	DATE: Jan 11, 1988
ELEVATION:	GWL: Depth Date/Time	DATE STARTED: Jan 11, 1988
ENGINEER/GEOLOGIST: Lowell Willis	Depth Date/Time	DATE COMPLETED: JAN 15, 1988
DRILLING METHODS: Cable Tool		PAGE 1 OF 3

DEPTH (FT)	SAMPLE TYPE & NO.	BLOWS ON SAMPLER PER 1 ft	RECOVERY (FT)	DESCRIPTION	USCS SYMBOL	MEASURED CONSISTENCY (TSF)	REMARKS
				stiff brown 10YR 5/6 gravelly clay some silt and sand, trace cobbles dry			Consistency and density based on relative soil textures.
5					Cl		Soil Descriptions based on soil cuttings observed while drilling and boring 364 drilling log
10	ST 7762 845	NA	1.2				
				13.0			
				~~dense~~ stiff gray 10YR 5/6 gravelly clay, some silt and sand, trace cobbles - dry			
15					Cl		
20	ST 1030	NA	0.4				did not keep first try, not enough recovery
	7763 1130	NA	0.8				
25							

NOTES: Pennsylvania Drilling Co
Driller Dave Neuman
Helper Bob Johnson
water added ~~while~~ while drilling - 230 gallons

Shelby tube sample collected following ASTM Standard, color follow Munsell soil color chart

background HNU = 0 ppm
TB = 160 ppm
O = 2 ppm

34

FERNALD RI/FS

2657

VISUAL CLASSIFICATION OF SOILS

PROJECT NUMBER: 602.3.2	PROJECT NAME: Fernald RI/FS	
BORING NUMBER: B264	COORDINATES:	DATE: Jan 12, 1988
ELEVATION:	GWL: Depth Date/Time	DATE STARTED: Jan 11, 1988
ENGINEER/GEOLOGIST: Lowell Wille	Depth Date/Time	DATE COMPLETED: JAN 15, 1988.
DRILLING METHODS: Cable Tool		PAGE 2 OF 3

DEPTH (FT)	SAMPLE TYPE & NO.	BLOWS ON SAMPLER PER (6")	RECOVERY (IN)	DESCRIPTION	USCS SYMBOL	MEASURED CONSISTENCY (TSF)	REMARKS
				stiff gray 10YR 5/8 gravelly clay, some silt, ~~some~~ and sand, trace cobbles. dry	CL		
				34.0			
35				dense gray 10YR 5/0 sand, some silt and clay, trace gravel and cobbles. dry			
40							
					SP		
45							
50							
55							

NOTES:

SEE PAGE 1 OF 3.

FERNALD RI/FS

VISUAL CLASSIFICATION OF SOILS

PROJECT NUMBER: 602.3.2	PROJECT NAME: Fernald RI/FS	
BORING NUMBER: B264	COORDINATES:	DATE: Jan 13, 1988
ELEVATION:	GWL: Depth Date/Time	DATE STARTED: Jan 11, 1988
ENGINEER/GEOLOGIST: Lowell Wille	Depth Date/Time	DATE COMPLETED: JAN 15 1988
DRILLING METHODS: Cable Tool		PAGE 3 OF 3

DEPTH (FT)	SAMPLE TYPE & NO.	BLOWS ON SAMPLER PER (N/A)	RECOVERY (N/A)	DESCRIPTION	USCS SYMBOL	MEASURED CONSISTENCY (TSF)	REMARKS
65				dense gray 10YR6/0 sand, some silt, clay and gravel, trace cobbles- dry			
70				71.0			
				dense gray 10YR6/0 sand, some silt, clay and gravel, trace cobbles-wet	SP	-	
75							
80							
85				85.0			
				bottom of boring			

NOTES:

see page 1 of 3.

FERNALD RI/FS

#41

2657

VISUAL CLASSIFICATION OF SOILS

PROJECT NUMBER: 602	PROJECT NAME: FMPC RI/FS Task 3.2		
BORING NUMBER: 128	COORDINATES:	DATE:	
ELEVATION:	GWL: Depth Date/Time	DATE STARTED: 01/10/88	
ENGINEER/GEOLOGIST: M. Goldberg	Depth Date/Time	DATE COMPLETED: 01/14/88	
DRILLING METHODS: Cable Tool		PAGE 1 OF 2	

DEPTH (FT)	SAMPLE TYPE & NO.	BLOWS ON SAMPLER PER (6 inch)	RECOVERY (in.)	DESCRIPTION	USCS SYMBOL	MEASURED CONSISTENCY (TSF)	REMARKS
1	07 ② 17	27 24 17	14"	Hard, yellowish brown silt (10YR 5/4) Dry	ML	4.5	Hnu=0 α=0 δB=0 0930
2 3	07 10	11 10 7	12"	Very stiff, yellowish brownish silt w/ trace gravel (10YR 5/4) dry	ML	2.5	Hnu=0 α=0 δB=240 0945
4	07 19	16 24 29	6"	Silt size Fly ash, dry (2.5Y 2/0) Brittle 5Ft	ML	—	Hnu=0 α=0 δB=240 cpm 0955
5 6	07 20	18 15 18	12"	Hard, Dark Brown clay (10YR 4/3) Trace of gravel Dry	CL	4.5	Hnu=0 α=0 δB=240 cpm Ran Shelby #7823 5.5-6.5 #1300 1000
7	07 ② 21	18 22 21	18	Very stiff Dark Brown clay (10yr 4/3) Trace of gravel. Dry 8Ft	CL	3.5	Hnu=0 α=0 δB=120 cpm 1015
8 9	07 22	16 14 14	18"	Very stiff Dark Brown clay (10yr 4/3) with organics debris. dry 9Ft	OL	2.5	Hnu=0 α=0 δB=120 1020
10	07 ② 24	3 5 6	18"	Very stiff Dark Brown clay (10YR 4/3) with trace of gravel. moist	CL	3.0	Hnu=0 α=0 δB=100 1415
11 12	07 ② 25	13 11 3	18"	Very stiff Dark Brown clay (10YR 4/3) w/ trace of gravel. encountered Lime sludge @ 12 Ft moist		2.5	Hnu=0 α=0 δB=120 3-4inch lense of lime sludge 11.7-12Ft 1430
13	07 26	7 9 13	14"	Very stiff Dark Brown clay (10yr 4/3 trace of gravel. moist 13Ft		3.0	Hnu=0 α=0 δB=120 1440
14 15	07 ② 27	13 17 19	18"	Hard Dark grey clay (10YR 4/1) w/ gravel. Trace of lime sludge @ 13.5 Ft moist		4.0	Hn=0 α=0 δB=120 1445

NOTES:

I) Drilling Contractor : Pennsylvania Drilling
Driller : Tim Harris
Helper : Craig Coulter

II) Background Measurements
A) Hnu = 0 B) α = 0 C) δB = 120 cpm

III) Water used = 55 gallons + 80 = 135 gallons

III) Samples via Muncell colors ASTM

37

402-11-86

FERNALD RI/FS

2657

VISUAL CLASSIFICATION OF SOILS

PROJECT NUMBER: 602	PROJECT NAME: FMPC RI/FS T 3.2		
BORING NUMBER: 128	COORDINATES:	DATE:	
ELEVATION:	GWL: Depth Date/Time	DATE STARTED: 01/10/88	
ENGINEER/GEOLOGIST: M. Goldberg	Depth Date/Time	DATE COMPLETED: 01/14/88	
DRILLING METHODS: Cable Tool		PAGE 2 OF 2	

DEPTH	SAMPLE TYPE & NO.	BLOWS ON SAMPLER PER	RECOVERY	DESCRIPTION	USCS SYMBOL	MEASURED CONSISTENCY (TSF)	REMARKS
16 17	07 8 28	NA	1.8 Ft	Shelby Tube			Hnu=0 α=0 δB=120 1630
17 18	07 8 29	6 11 50	12"	Hard grey clay w/ trace of F gravel (2.5Y 5/0) dry	CL	4.0	Hnu=0 α=0 δB=100 0830
19 20	07 8 30	12 14 15	12"	Hard Dark grey clay (10YR 4/1) w/ trace of F gravel dry	CL	4.0	Hnu=0 α=0 δB=100 0906
21	07 8 31	7 11 7	12"	Hard Dark grey clay (10YR 4/1) w/ gravel. Dry 21.5	CL	4.0	Hnu=0 α=0 δB=100 0928
22 23	07 8 32	8 13 18	10"	Hard yellowish Brown clay (10YR 5/4) trace of F gravel. Dry			Hnu=0 α=0 δB=100 0955
24	07 8 33	13 18 26	18"	Hard yellowish Brown clay (10yr 5/4) trace of F gravel. Dry	CL		Hnu=0 α=0 δB=100 1025
25 26	07 8 34	8 3 11	10"	Hard yellowish Brown clay (10yr 5/4) trace of F gravel w/ Lense of Dark grey clay @ 25 Ft± (10yr 5/4) Dry 26.5		4.0	Hnu=0 α=0 δB=100 1038
27	07 8 35	16 18 21	18"	Dense yellowish Brown sand (10YR 5/6 Dry trace of F gravel	SW	2.0	Hnu=0 α=0 δB=100 1306
28 29	07 8 36	8 10 16	8"	Very stiff dark gray clay (10YR 4/1) moist	CL	3.5	Hnu=0 α= δB=90 1420
30	07 8 37	9 17 29	14"	very stiff dark gray clay (10YR 4/1) moist	CL	3.5	HNU=0 α=0 δB=60 1450

NOTES: 30.5 TD

SEE PAGE 1 OF 1

38

402-11-86

FERNALD RI/FS

#A0

2657

VISUAL CLASSIFICATION OF SOILS

PROJECT NUMBER: 802 T3.2	PROJECT NAME: FMPC RI/FS	
BORING NUMBER: 139	COORDINATES:	DATE: 01 / 11 / 89
ELEVATION:	GWL: Depth Date/Time	DATE STARTED: 01 / 11 / 89
ENGINEER/GEOLOGIST: W. KEGLEY	Depth Date/Time	DATE COMPLETED: 01/13/89
DRILLING METHODS: CABLE TOOL, SPLIT SPOON		PAGE 1 OF 2

DEPTH (feet)	SAMPLE TYPE & NO.	BLOWS ON SAMPLER PER 6 (inch)	RECOVERY (inch)	DESCRIPTION	USCS SYMBOL	MEASURED CONSISTENCY (TSF)	REMARKS
1	0796 1105	50/4 31 12	12	VERY STIFF DARK YELLOWISH BROWN (10YR 4/4) silt and gravel with clay - DRY	ML	3.0	Hav = 0ppm βγ = 100cpm α = 0cpm
2	0797 1130	19 13 14	15	2.5'			Hav = 0ppm βγ = 60-80 cpm α = 0cpm
3	0798 1305	15 20 26	14	STIFF VERY DARK GREY (5Y 3/1) Clay - DRY	CL	1.5	
4				STIFF VERY DARK GREY (5Y 3/1) clay with silt TRACE SAND - DRY 4.6	CL	2.0	Hav = 0ppm βγ = 100-120cpm α = 0cpm
5	0799 1310	60 12 12	18	STIFF Yellowish BROWN (10YR 5/4) MOTTLED Clay TRACE GRAVEL AND SILT - DRY	CL	1.5	Hav = 0ppm βγ = 80-100cpm α = 0cpm
6	0790 1315	4 10 12	16	STIFF YELLOWISH BROWN (10YR 5/6) Mottled Clay TRACE GRAVEL AND SILT - DRY	CL	2.0	Hav = 0ppm βγ = 80-100cpm α = 0cpm
8	0791 0800	10 13 21	18	VERY STIFF YELLOWISH BROWN (10YR 5/4) mottled Clay TRACE GRAVEL AND SILT - DRY	CL	3.0	Hav = 0ppm BEGIN 01 12 89 βγ = 80-100cpm α = 0cpm
9 10	0792 0815	17 16 21	7	STIFF Yellowish BROWN (2.5Y 6/4) MOTTLED ~~CLAY~~ SILT AND ~~SILT~~ CLAY WITH GRAVEL, SOME SAND - DRY.	ML	2.0	Hav = 0ppm βγ = 80-100cpm α = 0cpm
11 12	0793 0850	12 20 26	17	HARD LIGHT YELLOWISH BROWN (2.5Y 6/4) MOTTLED CLAY AND SILT WITH GRAVEL, SOME SAND - DRY	CL	4.5+	Hav = 0ppm βγ = 80-100cpm α = 0cpm
13	0794 0910	14 24 26	18	HARD STRONG BROWN (7.5YR 5/6) CLAY AND SILT WITH GRAVEL, SOME SAND - DRY 13.4	CL	4.5	Hav = 0ppm βγ = 80-100cpm α = 0cpm
14	0795 0930	10 20 24	16	VERY STIFF GREY (5Y 5/1) CLAY and silt, TRACE GRAVEL - DRY Tight Vertical Fracture with Fe_2O_3 stains	CL	3.0	Hav = 0ppm βγ = 80-100cpm α = 0cpm

NOTES:

CONTRACTOR: PENN DRILL

DRILLER: HARRY DYKES, JR.

ASSISTANT: JOHN JANDINE

WATER ADDED TO BORING 1-5 gal

SAMPLES TAKEN USING ASTM STANDARD PENETRATION TEST.

COLOR identified using Munsell color chart

BACKGROUND LEVELS

Hav = 0 ppm α = 0 cpm

βγ = 80-120 cpm LEL/O_2 = 0 ppm Explosive/20.5%O_2

39

402-11-88

FERNALD RI/FS

VISUAL CLASSIFICATION OF SOILS

PROJECT NUMBER: 607 T 3.2	PROJECT NAME: FMPC RI IFS	
BORING NUMBER: 138	COORDINATES:	DATE: 1 12 88
ELEVATION:	GWL: Depth Date/Time	DATE STARTED: 1 11 88
ENGINEER/GEOLOGIST: W. KIEGLEY	Depth Date/Time	DATE COMPLETED: 1 13 88
DRILLING METHODS: CABLE TOOL / SPLIT SPOON.		PAGE 2 OF 2

DEPTH (Feet)	SAMPLE TYPE & NO.	BLOWS ON SAMPLER PER (inches)	RECOVERY (inches)	DESCRIPTION	USCS SYMBOL	MEASURED CONSISTENCY (TSF)	REMARKS
16 / 16.5'	07906 1048	4 8 14	8	Shelby Tube STIFF DARK GREY (5Y 4/1) CLAY SOME GRAVEL TRACE SAND	CL	1.5	Shelby Tube 15.0 - 16.9' SAMPLE # 07906 @ 1000 hr. Hnu = 0 ppm α = 0 cpm Bα = 100 cpm
17 / 18	07908 1325	13 8 16	10	VERY STIFF GREY (5Y 5/1) CLAY SOME GRAVEL AND SAND - DRY 17.9	CL	3D	Hnu = 0 ppm Bα = 100 cpm α = 0 cpm
19	07909 1345	22 50/5 50/3	12	VERY DENSE GREY 5Y 5/1 SAND AND SILT, TRACE GRAVEL - TOP DRY BOTTOM MOIST	SM	4.5	Hnu = 0 ppm Bα = 100 cpm α = 0 cpm
20 / 21	07945 1415	50/4 50/2	6	VERY DENSE GREY (5Y 5/1) SAND SOME SILT TRACE GRAVEL AND CLAY - MOIST	SM	4.0	Hnu = 0 ppm Bα = 100 cpm α = 0 cpm
22	07946 1435	50/3 50/4	7	VERY DENSE GREY (5Y 5/1) SAND SOME SILT TRACE GRAVEL AND CLAY - MOIST	SM		Hnu = 0 ppm Bα = 100 cpm α = 0 cpm
23 / 24	07947 1457	34 42 50/4	15	HARD GREY (5Y 5/1) silt and SAND SOME CLAY AND GRAVEL - DRY 23.8	ML	4.5+	Hnu = 0 ppm Bα = 100 cpm α = 0 cpm
25	07948 1536	18 28 29	10	VERY STIFF GREY (5Y 5/1) clay and silt SOME SAND AND GRAVEL - DRY	CL	3.5	Hnu = 0 ppm Bα = 100 cpm α = 0 cpm
26 / 27	07949 1621	10 19 26	13	STIFF OLIVE (5Y 5/3) CLAY SOME GRAVEL AND SILT, TRACE WOOD FRAGMENTS - DRY	CL	2.0	Hnu = 0 ppm Bα = 100 cpm α = 0 cpm
28	07950 0857	18 22 24	14	Shelby Tube HARD, OLIVE GREY (5Y 5/2) CLAY SOME SILT, TRACE GRAVEL 28.5 ft.	CL	4.5	Hnu = 0 ppm Bα = 100 cpm α = 0 cpm Begin 1 13 88 Shelby tube Taken @ 0857 SAMPLE # 07950
				BOTTOM OF BORING			

NOTES:

402-11-88

FERNALD RI/FS

VISUAL CLASSIFICATION OF SOILS

PROJECT NUMBER: 602.3.2	PROJECT NAME: Fernald RI/FS	
BORING NUMBER: B364	COORDINATES:	DATE: 12/14/87
ELEVATION:	GWL: Depth Date/Time	DATE STARTED: 12/11/87
ENGINEER/GEOLOGIST: T. Sullivan	Depth Date/Time	DATE COMPLETED: 12/19/87
DRILLING METHODS: Cable Tool		PAGE 1 OF 10

DEPTH (ft.)	SAMPLE TYPE & NO.	BLOWS ON SAMPLER PER 1 1/2 ft.	RECOVERY (in.)	DESCRIPTION	USCS SYMBOL	MEASURED CONSISTENCY (TSF)	REMARKS
1	07716 1100 12/11	2 3 8	4	Soft brown 7.5YR 3/2 clay, organic rich, dry. 0.5 Soft brown 7.5YR 3/2 clay, some silt, dry 1.5	OH cl	NA	HNU = 0ppm γB = 160 cpm α = 2cpm No recovery 1st try.
2	07717 1115 12/11	3 10 8	10	Fill, hard brown 10YR 4/4 silty clay, some gravel, dry.	NA	NA	HNU = 0ppm γB = 140 cpm α = 2 cpm
3 4	07718 1120 12/11	10 11 18	8	Fill, hard brown 10YR 4/4 clay with some cobbles and slag, gravel, dry 4.5	NA	NA	HNU = 0 ppm γB = 140 cpm α = 2 cpm
5	07719 1125 12/11	17 21 21	16	Hard, brown 10YR 3/4 clay with some silt and gravel, dry.	cl	>5	HNU = 0 ppm γB = 160 cpm α = 2 cpm
6 7	07720 1130 12/11	23 22 21	18	very stiff, yellowish brown 10YR 5/4 clay with some silt, trace gravel	cl	4	HNU = 0ppm γB = 120 cpm α = 2 cpm
8 9	07721 1055 12/14	4 8 10	11	very stiff, yellowish brown 10YR 4/4 mottled clay with some silt, trace sand and gravel, dry.	cl	2.5	HNU = 0ppm γB = 100 cpm α = 2cpm
10	07722 1135 12/14	5 6 11	17	very stiff yellowish brown 10YR 4/4 clay with some silt, trace sand and gravel, dry.	cl	4	HNU = 0ppm γB = 100cpm α = 2 cpm
11 12	07723 1150 12/14	6 7 10	18	very stiff yellowish brown 10YR 4/4 clay with some silt, gravel, trace sand, dry. 12.0	cl	2.5	HNU = 0ppm γB = 100cpm α = 2cpm
13	07724 1330 12/14	2 6 6	10	very stiff yellowish brown 10YR 4/4 silty clay, some sand, gravel, dry. 13.5	cl	2.5	HNU = 0ppm γB = 120 cpm α 2cpm
14	07725 1340 12/14	5 10 15	9	very stiff gray 2.5Y 4/0 clay, some silt and gravel, dry. 15.0	cl	3.0	HNU = 0ppm γB = 120cpm α = 2cpm

NOTES: Pennsylvania Drilling Co.
Bucyrus Erie 24-W drilling rig.
Driller: Dave Newman
Helper: Bob Johnson

Background Dec. 14, 1987: HNU = 0 ppm, γB = 140 cpm, α = 2 cpm

Blows on sampler follow ASTM standard for 2in x 18in split spoon sampler.
Soil colors follow Munsell color charts. Approx. 700 gallons needed in drilling.

FERNALD RI/FS

VISUAL CLASSIFICATION OF SOILS

PROJECT NUMBER: 602.3.2	PROJECT NAME: Fernald RI/FS	
BORING NUMBER: B364	COORDINATES:	DATE: 12/14/87
ELEVATION:	GWL: Depth Date/Time	DATE STARTED: 12/11/87
ENGINEER/GEOLOGIST: T. Sullivan	Depth Date/Time	DATE COMPLETED:
DRILLING METHODS: Cable Tool		PAGE 2 OF 10

DEPTH (ft.)	SAMPLE TYPE & NO.	BLOWS ON SAMPLER PER (1/6 ft.)	RECOVERY (in.)	DESCRIPTION	USCS SYMBOL	MEASURED CONSISTENCY (TSF)	REMARKS
15–16	07726 1355 12/14	5 6 5	4	stiff gray 10YR 5/1 silty clay, some gravel, sand, dry.	cl	1.5	HNU = 0ppm γB = 130cpm α = 2 cpm
17–18	07727 1405 12/14	3 5 8	6	very stiff gray 10YR 5/1 silty clay, some gravel, sand, dry.	cl	2.5	HNU = 0ppm γB = 120cpm α = 2 cpm
19–20	07728 1430 12/14	2 7 13	6	very stiff gray 10YR 5/1 silty clay, some gravel, sand, dry.	cl	4	HNU = 0ppm γB = 120cpm α = 2cpm
20–21	07729 1555 12/14	6 6 8	2	very stiff gray 10YR 5/1 silty clay, some gravel, cobbles, sand, dry. 21.0	cl	2.5	HNU = 0ppm γB = 110cpm α = 2cpm
22–23	07730 1610 12/14	3 7 16	9	very stiff gray 10YR 4/1 clay, trace gravel and silt.	cl	3	HNU = 0ppm γB = 100cpm α = 2cpm
23–24	07731 1640 12/14	4 7 13	13	very stiff gray 10YR 4/1 clay, some gravel, silt, dry. 24.0	cl	3.5	HNU = 0 ppm γB = 120 cpm α = 2cpm
24–25	07732 0830 12/15	9 19 22	11	very stiff gray 7.5YR 4/0 gravelly clay, some silt, dry.	cl	4	HNU = 0ppm γB = 120 cpm α = 2 cpm
26–27	07733 0845 12/15	7 11 14	12	very stiff gray 7.5YR 4/0 gravelly clay, some silt, dry	cl	3.5	HNU = 0 ppm γB = 100 cpm α = 2 cpm
27–28	07734 0900 12/15	11 14 20	3	very stiff gray 7.5YR 4/0 gravelly clay, some silt, dry	cl	3	HNU = 0ppm γB = 100 cpm α = 2 cpm | No recovery 1st try, 3in. 2nd try.
29–30	07735 0950 12/15	7 10 15	9	very stiff gray 7.5YR 4/0 gravelly clay, some silt, dry	cl	2.5	HNU = 0ppm γB = 100cpm α = 2cpm

NOTES:

FERNALD RI/FS

VISUAL CLASSIFICATION OF SOILS

PROJECT NUMBER: 602.3.2	PROJECT NAME: Fernald RI/FS	
BORING NUMBER: B364	COORDINATES:	DATE: 12/15/87
ELEVATION:	GWL: Depth Date/Time	DATE STARTED: 12/11/87
ENGINEER/GEOLOGIST: T. Sullivan	Depth Date/Time	DATE COMPLETED:
DRILLING METHODS: Cable Tool		PAGE 3 OF 10

DEPTH (ft.)	SAMPLE TYPE & NO.	BLOWS ON SAMPLER PER (1/2 ft.)	RECOVERY (in.)	DESCRIPTION	USCS SYMBOL	MEASURED CONSISTENCY (TSF)	REMARKS
30							
31	07736 1125 12/15	50 - -	2	gray 7.5YR 5/0 gravelly clay, some silt, dry 31.5	cl	Unk	HNU=0ppm γB=100cpm α=2cpm / 50 blows/2in. Insufficient sample for consistency.
32	07737 1150 12/15	9 31 40	16	very stiff gray 10YR 5/1 clay, some gravel, silt, dry. 32.5	cl	3.5	HNU=0ppm γB=100cpm α=2cpm
33				dense gray 10YR 5/1 sand, some silt, clay, dry. 33.0	sm	NA	
34	07738 1440 12/15	19 35 37	13	dense gray 10YR 5/1 gravelly sand, some silt, dry. 34.5	sm	NA	HNU=0ppm γB=100cpm α=2cpm
35							
36	07739 1445 12/15	12 22 27	14	med. dense gray 10YR 4/1 sand with some gravel, silt, dry.	sm	NA	HNU=0 ppm γB<100cpm α=2cpm
37							
38							
39							
40	07740 1545 12/15	40 40 32	14	dense gray 10YR 5/1 sand with some gravel, silt, dry.	sm	NA	HNU=0ppm γB=120cpm α=2cpm
41							
42							
43							
44							
45							

NOTES:

402-11-86

FERNALD RI/FS

VISUAL CLASSIFICATION OF SOILS

PROJECT NUMBER: 602.3.2	PROJECT NAME: Fernald RI/FS	
BORING NUMBER: B364	COORDINATES:	DATE: 12/16/87
ELEVATION:	GWL: Depth Date/Time	DATE STARTED: 12/11/87
ENGINEER/GEOLOGIST: T. Sullivan	Depth Date/Time	DATE COMPLETED:
DRILLING METHODS: Cable Tool		PAGE 4 OF 10

DEPTH (ft.)	SAMPLE TYPE & NO.	BLOWS ON SAMPLER PER (1/2 ft.)	RECOVERY (in.)	DESCRIPTION	USCS SYMBOL	MEASURED CONSISTENCY (TSF)	REMARKS
45							
46	07741 1620 12/15	27 32 30	14	med. dense gray 10YR5/1 sand with some gravel and silt, dry.	sm	NA	HNU=0ppm γB=160cpm α=2cpm
47							
48							
49				49			
50	07742 0840 12/16	22 35 37	9	dense gray 10YR 5/1 gravelly sand, some silt, trace clay, dry.	sw	NA	HNU=0 ppm γB=100 cpm α=2 cpm
51							
52							
53							
54							
55	07743 0915 12/16	97 for 6in.	6	very dense gray 10YR 4/1 gravelly sand, some pebbles, some silt and clay, dry.	sw	NA	HNU=0ppm γB=110 cpm α=2cpm
56							
57							
58							
59							
60							

NOTES:

FERNALD RI/FS

VISUAL CLASSIFICATION OF SOILS

PROJECT NUMBER: 602.3.2	PROJECT NAME: Fernald RI/FS	
BORING NUMBER: B364	COORDINATES:	DATE:
ELEVATION:	GWL: Depth Date/Time	DATE STARTED: 12/11/87
ENGINEER/GEOLOGIST: T. Sullivan	Depth Date/Time	DATE COMPLETED:
DRILLING METHODS: Cable Tool		PAGE 5 OF 10

DEPTH (ft.)	SAMPLE TYPE & NO.	BLOWS ON SAMPLER PER (½ ft.)	RECOVERY (in.)	DESCRIPTION	USCS SYMBOL	MEASURED CONSISTENCY (TSF)	REMARKS
61	07744 1140 12/16	22 50 39	10	dense gray 10YR 4/1 gravelly sand, some pebbles, some silt, trace clay, dry.	SW	NA	HNU = 0 ppm γB = 100 cpm α = 2 cpm
62							
63							
64							
65	07745 1345 12/16	33 32 35	7	dense gray 10YR 5/1 gravelly sand, some silt and clay, dry.	SW	NA	HNU = 0 ppm γB = 120 cpm α = 2 cpm
66							
67							
68				68			
69							
70	07746 1550 12/16	13 14 14	8	med. dense gray 10YR 4/1 sand, some silt, trace gravel, moist?	SM	NA	HNU = 0 ppm γB = 140 cpm α = 2 cpm
71							
72							
73							
74							
75							

NOTES:

FERNALD RI/FS

VISUAL CLASSIFICATION OF SOILS

PROJECT NUMBER: 602.3.2	PROJECT NAME: Fernald RI/FS	
BORING NUMBER: B364	COORDINATES:	DATE: 12/17/87
ELEVATION:	GWL: Depth Date/Time	DATE STARTED: 12/11/87
ENGINEER/GEOLOGIST: T. Sullivan	Depth Date/Time	DATE COMPLETED:
DRILLING METHODS: Cable tool.		PAGE 6 OF 10

DEPTH (ft.)	SAMPLE TYPE & NO.	BLOWS ON SAMPLER PER (1/2 ft.)	RECOVERY (in.)	DESCRIPTION	USCS SYMBOL	MEASURED CONSISTENCY (TSF)	REMARKS
75	07747 0230 12/17	13 26 28	8	med. dense gray 10YR 4/1 sand with some gravel and silt, trace clay, wet.	sm	NA	HNU=0ppm γB=110cpm α=2cpm
76							
77							
78							
79							
80	07748 0955 12/17	7 12 14	2	med. dense gray 10YR 4/1 sand with some gravel and pebbles, some silt and clay, wet.	sm	NA	HNU=0ppm γB=140cpm α=2cpm
81							
82							
83				83			
84							
85	07749 1150 12/17	12 11 14	4	med. dense gray 10YR 4/1 fine grained sand, some silt and clay, wet.	sp	NA	HNU=0ppm γB=120cpm α=2cpm
86							
87							
88							
89							
90							

NOTES:

FERNALD RI/FS

VISUAL CLASSIFICATION OF SOILS

PROJECT NUMBER: 602.3.2	PROJECT NAME: Fernald RI/FS	
BORING NUMBER: B364	COORDINATES:	DATE: 12/18/87
ELEVATION:	GWL: Depth 72.25 Date/Time 12/17 0915	DATE STARTED: 12/11/87
ENGINEER/GEOLOGIST: T. Sullivan	Depth Date/Time	DATE COMPLETED:
DRILLING METHODS: Cable Tool		PAGE 7 OF 10

DEPTH (ft)	SAMPLE TYPE & NO.	BLOWS ON SAMPLER PER (1/2 ft.)	RECOVERY (in)	DESCRIPTION	USCS SYMBOL	MEASURED CONSISTENCY (TSF)	REMARKS
90	07750	10		med. dense gray 10YR 4/1 sandy gravel, some silt, uniform fine gravel. 91.0	gp	NA	HNU = 0 ppm
91	1355 12/17	12 21	18	gray 10YR 4/1 fine grained sand layer, some silt and clay. 91.3	sp		γB = 180 cpm α = 2 cpm
92				gray 10YR 4/1 sandy gravel, some pebbles, trace silt, wet.	gp		
93							
94							
95	07751	14		dense gray 10YR 4/1 sand and gravel, some silt and clay, some pebbles, wet.	gm	NA	HNU = 0 ppm
96	1620 12/17	28 38	13				γB = 120 cpm α = 2 cpm
97							
98				98			
99							
100	07752	6		med dense gray 10YR 5/1 fine grained sand, some silt and clay, 2 in. gray 10YR 4/1 sandy gravel lens at 101.3 ft., wet.	sp	NA	HNU = 0 ppm
101	1705 12/17	7 11	12				γB = 130 cpm α = 2 cpm
102							
103				103			
104							
105							

NOTES:

402-11-86

FERNALD RI/FS

2657

VISUAL CLASSIFICATION OF SOILS

PROJECT NUMBER: 602.3.2	PROJECT NAME: Fernald RI/FS	
BORING NUMBER: B364	COORDINATES:	DATE: 12/ /87
ELEVATION:	GWL: Depth 71.05 Date/Time 12/18 0745	DATE STARTED: 12/11/87
ENGINEER/GEOLOGIST: T. Sullivan	Depth Date/Time	DATE COMPLETED:
DRILLING METHODS: Cable Tool		PAGE 8 OF 10

DEPTH (ft.)	SAMPLE TYPE & NO.	BLOWS ON SAMPLER PER (1/2 ft.)	RECOVERY (in)	DESCRIPTION	USCS SYMBOL	MEASURED CONSISTENCY (TSF)	REMARKS
105	07753 0810 12/18	2 3 3	4	very loose grayish brown 10YR 4/2 sandy gravel, trace silt, some ~~clay~~ pebbles, wet.	gp	NA	HNU = 0ppm γB = 120cpm α = 2cpm
106							
107				107.5			
108							
109							
110	07754 1115 12/18	2 4 5	16	loose gray 10YR 4/2 sand with some silt and trace gravel, uniformly fine grained sand, wet. 111.2	sp	NA	HNU = 0ppm γB = 110cpm α = 2cpm
111				gray 10YR 4/1 sandy gravel, some silt, wet, well graded.	gp		
112							
113							
114				114			
115	07755 1405 12/18	19 23 22	18	med dense grayish brown 10YR 5/2 fine grained sand, some silt, wet. 116.0	sp	NA	HNU = 0ppm γB = 100cpm α = 3cpm
116				gray 10YR 4/1 sandy gravel, some silt, well graded, wet.	gp		
117							
118							
119							Had problem with sand coming up casing after bailing.
120							

NOTES:

48

402-11-86

FERNALD RI/FS

2657

VISUAL CLASSIFICATION OF SOILS

PROJECT NUMBER: 602.3.2	PROJECT NAME: Fernald RI/FS	
BORING NUMBER: B364	COORDINATES:	DATE: 12/18/87
ELEVATION:	GWL: Depth Date/Time	DATE STARTED: 12/11/87
ENGINEER/GEOLOGIST: T. Sullivan	Depth Date/Time	DATE COMPLETED:
DRILLING METHODS: Cable Tool		PAGE 9 OF 10

DEPTH (ft.)	SAMPLE TYPE & NO.	BLOWS ON SAMPLER PER (1/2 ft.)	RECOVERY (in.)	DESCRIPTION	USCS SYMBOL	MEASURED CONSISTENCY (TSF)	REMARKS
120	07756 1530 12/18	15 14 13	6	med. dense gray 10YR 4/1 sand and gravel, some silt, trace pebbles and clay, wet.	gm	NA	HNU = 0ppm γB = 110cpm α = 2cpm
121							
122							
123							
124							
125	07757 1630 12/18	4 8 9	2	loose gray 10YR 4/1 sand and gravel, some silt, trace clay, wet.	gm	NA	HNU = 0ppm γB = 130cpm α = 3cpm
126							
127							
128							
129				129			
130	07758 1720 12/18	6 7 10	12	loose gray 10YR 4/1 sand, some silt and clay, trace gravel, wet.	sm	NA	HNU = 0 ppm γB = 120cpm α = 2cpm
131							
132							
133							
134							
135							

NOTES:

FERNALD RI/FS

VISUAL CLASSIFICATION OF SOILS

PROJECT NUMBER: 602.3.2	PROJECT NAME: Fernald RI/FS	
BORING NUMBER: B364	COORDINATES:	DATE: 12/19/87
ELEVATION:	GWL: Depth 70.35 Date/Time 12/19 0755	DATE STARTED: 12/11/87
ENGINEER/GEOLOGIST: T. Sullivan	Depth Date/Time	DATE COMPLETED:
DRILLING METHODS: Cable Tool		PAGE 10 OF 10

DEPTH (ft.)	SAMPLE TYPE & NO.	BLOWS ON SAMPLER PER (1/2 ft.)	RECOVERY (in.)	DESCRIPTION	USCS SYMBOL	MEASURED CONSISTENCY (TSF)	REMARKS
135							
136	07759 0920 12/19	3 9 12	11	med dense gray 10YR 4/1 sand, some silt and gravel, trace clay, wet.	SM	NA	HNU = 0 ppm HB = 100 cpm α = 2 cpm
137							
138							
139							
140				140.0			
141	07760 1110 12/19	7 8 12	12	stiff bluish green 2.5y 4/0 clay, some silt, moist. At 140.6 ft. the clay is more greenish 5y 4/1 and is a silty clay, moist.	~~SM~~ CL	2.0	HNU = 0 ppm HB = 120 cpm α = 2 cpm
142	ST 1 1430 12/19						Pushed Shelby tube at 141.5 ft, penetrated 1.1 ft, recovered 1.1 ft.
143				E.O.B. 141.5 ft. Shelby tube to 142.6 ft.			

NOTES:

FERNALD RI/FS

2657

VISUAL CLASSIFICATION OF SOILS

PROJECT NUMBER: 602	PROJECT NAME: FMPC RI/FS		
BORING NUMBER: 125	COORDINATES:	DATE: 12/21 - 12/23/87	
ELEVATION:	GWL: Depth Date/Time	DATE STARTED: 12/21/87	
ENGINEER/GEOLOGIST: B. Dunning	Depth Date/Time	DATE COMPLETED: 01/08/88	
DRILLING METHODS: Cable Tool		PAGE 1 OF 2	

DEPTH (Ft.)	SAMPLE TYPE & NO.	BLOWS ON SAMPLER PER (6")	RECOVERY (Inch)	DESCRIPTION	USCS SYMBOL	MEASURED CONSISTENCY (TSF)	REMARKS
1	S 07 8 00	4 16 15	15"	.5' Dense yellowish-brown sand (10 YR, 5/4) wet .5' 1.0' Dense light gray gravel rock (10 YR, 6/1) wet 1.0'	SM GW	- -	Hnu = 0 α = 0 γβ = 80 c.p.m. (1500)
2	S 07 8 01	50 43 36	9"	Hard, dark brown clay (10 YR, 4/3) with some coarse gravel. Dry 2' 2.5' Hard dark olive gray clay (5 Y, 3/2) with some gravel 3' Light gray very dense gravel (10 YR, 6/1)	CL Dry GP	4.5 4.5+	Hnu = 0 α = 0 γβ = 60 c.p.m. (1504)
4	S 07 8 02	10 13 13	18"	Hard, olive clay (5 Y, 4/3). Dry 5'	CL		Hnu = 0 Met refusal first Attempt. α = 0 γβ = 80 c.p.m. (1645)
5 6	S 07 8 03	31 22 28	18"	Hard, dark olive gray clay (5Y, 3/2) with a trace of fine gravel. Dry 7.5'		4.5+	Hnu = 0 End Day 12/21/87 Start Day 12/21/87 α = 0 γβ = 80 c.p.m. (1916)
7	S 07 8 04	19 23 30	6"				Hnu = 0 α = 0 γβ = 60 c.p.m. (1031)
8 9	S 07 8 06	13 17 20	15"	Hard, olive-gray clay (5Y, 4/2) with a trace of fine gravel Dry 10'		4.5	Breeze picked-up & increased background levels. Hnu = 0 γβ = 120 c.p.m. (1351) α = 0
10	S 07 8 07	25 27 33	18"	Stiff, yellowish-brown clay (10 YR, 5/6) silty and Dry 11'		1.5	Hnu = 0 α = 0 γβ = 120 c.p.m. (1357)
11 12	S 07 8 08	12 19 22	18"	Hard, brownish-yellow clay (10 YR, 6/8) with a trace of fine gravel. Dry 12'		4.5	Attempted Shelby tube, but lost recovery. Hnu = 0 γβ = 120 c.p.m. (1625) α = 0
13	S 07 8 09	5 7 11	12"	Very stiff, yellowish-brown clay (10 YR, 5/4) to (10 YR, 5/8) with a trace of gravel. Dry		3.5	End of Day 12/22/87 Start Day 12/23/87 Hnu = 0 α = 0 γβ = 60 c.p.m. (0836)
14 15	S 07 8 10	17 26 27	18"				Hnu = 0 α = 0 γβ = 40-60 c.p.m. (0840)

NOTES:

I) Drilling Contractor: Pennsylvania Drilling
Driller: Tim Harris
Helper: Craig Coulter

II) Samples color by Muncell Color Chart & blow counts via ASTM

III) Background Measurements
12/21/87 = Hnu = 0, α = 0, γβ = 250 cpm
12/22/87 = α = 0, Hnu = 0, γβ = 180-250 c.p.m.

51

402-11-86

FERNALD RI/FS

VISUAL CLASSIFICATION OF SOILS

PROJECT NUMBER: 602	PROJECT NAME: FMPC RI/FS		
BORING NUMBER: 125	COORDINATES:		DATE: 12/23/87
ELEVATION:	GWL: Depth	Date/Time	DATE STARTED: 12/21/87
ENGINEER/GEOLOGIST: B. Dunning	Depth	Date/Time	DATE COMPLETED: 01/08/88
DRILLING METHODS: Cable Tool			PAGE 2 OF 2

DEPTH (FT.)	SAMPLE TYPE & NO.	BLOWS ON SAMPLER PER (6")	RECOVERY (INCH)	DESCRIPTION	USCS SYMBOL	MEASURED CONSISTENCY (TSF)	REMARKS
16	ST 07 8 1	NA	14"	SHELBY TUBE PUSHED		~~1.5~~	Hnu = 0 α = 0 γB = 60-80 cpm. 0935
17	07 5 8 2	18 16 22	14"	Hard, Brownish yellow clay w/ trace of gravel (5Y 6/6) slightly moist @ 18.4	CL	4.5	Hnu = 0 α = 0 γB = 60 cpm 1045
18	07 5 8 3	24 22 27	12" 19.5				Hnu = 0 α = 0 γB = 50 cpm 1010
20	07 5 8 4	12 17 18	12"	STIFF, Dark ~~brown~~ gray clay (10YR 4/1) Trace of gravel. moist	CL	1.5	Hnu = 0 α = 0 γB = 60-80 cpm 1350
21	07 5 8 5	3 4 3	14"	STIFF Dark grey clay (10YR 3/1) Trace of gravel. ~~moist~~			Hnu = 0 α = 0 γB = 30 1500
23				23.0' ← BOTTOM OF BOREHOLE			
24							
25							
26							
27							
28							
29							
30							

NOTES: Background Levels 12/23/87
Hnu = 0
α = 0
γB = 180-250 cpm.

II. WATER USED: 30 + 20 = 50 gallons
13
65 gallons

III Background Measurements
01/07/88 = Hnu = 0
γ = 0
γB = 200 cpm

52

402-11-86

FERNALD RI/FS

2657

VISUAL CLASSIFICATION OF SOILS

PROJECT NUMBER: 602 T3.2	PROJECT NAME: FMPC RI/FS	
BORING NUMBER: 183	COORDINATES:	DATE: 01 07 88
ELEVATION:	GWL: Depth Date/Time	DATE STARTED: 01 07 88
ENGINEER/GEOLOGIST: W. KEGLEY	Depth Date/Time	DATE COMPLETED: 01 09 88
DRILLING METHODS: CABLE TOOL / SPLIT SPOON		PAGE 1 OF 2

DEPTH (feet)	SAMPLE TYPE & NO.	BLOWS ON SAMPLER PER 1 6 inch	RECOVERY (inch)	DESCRIPTION	USCS SYMBOL	MEASURED CONSISTENCY (TSF)	REMARKS
1	078 7 9 1345	9 9 5	13	VERY STIFF, BROWN (10YR 5/3) silt and clay with gravel - Dry	ML	3.5	HNU = 0ppm βγ = 140 cpm unshielded α = 0cpm
2	078 8 0 1350	6 7 11	12	HARD BROWN (10YR 5/3) clay and silt with gravel - DRY	CL	4.5+	HNU = 0ppm βγ = 180cpm unshielded α = 0cpm
3				Shelby Tube			
4	078 8 1 1355	9 10 11	12	3.8' VERY STIFF LIGHT YELLOWISH BROWN (10YR 6/4) MOTTLED CLAY WITH ~~AND~~ SILT - DRY	CL	2.5	HNU = 0ppm Shelby Tube 078873 TAKEN 01 10 88 @ 1130 βγ = 140 cpm unshielded α = 0cpm
5 6	078 8 2 1400	13 12 10	12	STIFF LIGHT YELLOWISH BROWN (10YR 6/4) mottled CLAY WITH SAND	CL	1.5	HNU = 0ppm βγ = 140 cpm unshielded α = 0cpm
7	078 8 3 1405	5 5 6	18	6.3' MEDIUM DENSE, LIGHT YELLOWISH BROWN (10YR 6/4) SAND AND CLAY - WET 7.4'	SC	0.5	HNU = 0ppm βγ = 200cpm unshielded α = 0cpm
8 9	078 8 4 1300	6 14 11	15	MEDIUM STIFF, LIGHT YELLOWISH BROWN (10YR 6/4) CLAY AND SILT SOME SAND - MOIST	CL	1.5	HNU = 0ppm RESUMED ON 7 88 βγ = 180cpm α 0 cpm
10	078 8 5 1305	2 3 18	8	9.2' MEDIUM DENSE, YELLOWISH BROWN (10YR 5/4) SAND AND GRAVEL SOME SILT - WET	SW		HNU = 0ppm βγ = 180cpm α = 0cpm
11 12	078 8 6 1430	30 16 21	16	10.9 DENSE YELLOWISH BROWN (10YR 5/4) SAND SOME SILT AND CLAY - WET	SP		HNU = 0ppm βγ = 180 cpm ~~shielded~~ α = 0cpm
13	078 8 7 1500	12 23 7	15	MEDIUM DENSE YELLOWISH BROWN (10YR 5/4) GRAVEL AND SAND SOME SILT - WET	GW		HNU = 0ppm βγ = 120 shielded α = 0cpm
14	078 8 8 1530	6 4 7	7	13.9 VERY SOFT OLIVE GREY (5Y 5/2) clay SOME SILT TRACE GRAVEL - DRY	CL ~~0.25~~	0.25	HNU = 0ppm βγ = 120 shielded α = 0cpm

NOTES: CONTRACTOR: PEARNDRILL
RIG: CYCLONE 42
DRILLER: HARRY DYKES JR.
ASSISTANT: JOHN VANDINE
WATER ADDED HOLE: 1 TICK = 5 gal
~~HH~~ ~~HH~~ ~~HH~~ ~~HH~~ ~~HH~~

SAMPLES TAKEN USING ASTM STANDARD Penetration TEST.

COLORS CLASSIFIED USING MUNSELL COLOR CHARTS.

BACKGROUND LEVELS
LEL - O_2: 0.1 ppm HNU = 0ppm βγ = 180 cpm α = 0 CPM

402-11-86

FERNALD
RI/FS

2657

VISUAL CLASSIFICATION OF SOILS

PROJECT NUMBER: 602 T3.2	PROJECT NAME: FMPC RI/FS	
BORING NUMBER: 183	COORDINATES:	DATE: 01 08 87
ELEVATION:	GWL: Depth Date/Time	DATE STARTED: 01 07 87
ENGINEER/GEOLOGIST: W. KEGLEY	Depth Date/Time	DATE COMPLETED: 01 09 87
DRILLING METHODS: CABLE TOOL / SPLIT SPOON		PAGE 2 OF 2

DEPTH (inch)	SAMPLE TYPE & NO.	BLOWS ON SAMPLER PER 6	RECOVERY (inch)	DESCRIPTION	USCS SYMBOL	MEASURED CONSISTENCY (TSF)	REMARKS
16	0 7 8 9 1630	2 2 2	6in	SOFT OLIVE GREY ~~CLAY~~ (5Y 5/2) clay with gravel moist	CL	0.5	SAMPLE 7889 IS SHELBY TUBE TAKEN AT 1545hr. Hnu=0ppm Bd=120cpm shielded γ=0cpm
17							BEGIN 01 09 88 Tried to ~~take~~ Drive sample three times no recovery
18 19	0 7 8 9 1 1055	1 2 12	5	VERY SOFT OLIVE GREY (5Y 5/2) CLAY with Gravel ~~moist~~ WET	CL	0.25	Hnu=0ppm Bd=120 cpm shielded γ=0 cpm
20	0 7 8 9 2 1105	2 4 5	10	VERY SOFT OLIVE GREY (5Y 5/2) clay with Gravel - moist	CL	0.25	Hnu=0ppm Bd=120 cpm shielded γ=0 cpm
21 22	0 7 8 9 3 1110	1 2 3	8	VERY SOFT OLIVE GREY (5Y 5/2) clay with gravel - wet	CL	0.25	Hnu=0ppm Bd=120 cpm shielded γ=0 cpm
				BOTTOM OF BORING			

NOTES:

54

402-11-86