U-003-402.4

3514

MINIMUM ADDITIVE WASTE STABILIZATION (MAWS) OU1 REGULATORY COMPLIANCE PLAN JUNE 12, 1992

06/12/92

[redacted]

3514

DRAFT

Minimum Additive Waste Stabilization (MAWS) OU 1 Regulatory Compliance Plan

REVISION 2

June 12, 1992

REV. 2
June 12, 1992

TABLE OF CONTENTS

Page

Introduction 1
Purpose of MAWS Regulatory Compliance Plan 1
Background of FEMP 3
Table 1: FEMP Operable Units 3
Table 2: Operable Unit 1 Quantities 4
Table 3: Operable Unit 1 Waste Materials 4
Overview of the MAWS Program 5

Process Definition and Description 7
MAWS Subsystems 7
Incoming Storage Area 8
Figure 1: The Maws Process Diagram 9
Soil Washing 10
Water Treatment System 10
Staging Area/Mix Station 11
Vitrification System 11
Off-Gas Treatment System 12
Radon Emissions 13
Monitoring of Discharges 14

Regulatory Requirements and Implementation 14
CERCLA, Section 121 15
Consent Agreement, Section XIII 15
RCRA, Section 3005 (g) - RCRA Research
Development, and Demonstration Permit 17
NESHAP 18
NPDES 19
OEPA Permits 19
NEPA Requirements 19

Handling and Storage of the Vitrified Waste 19
Treated Waste Performance Assessment 19
Storing the Bench-Scale Waste 20
Delisting Assessment Study 20
An Approach to Delisting Pit 5 Waste 21
Processing Wastes Other Than Pit 5 21

Meeting Regulatory Requirements and Guidance 22
Protecting Human Health and the Environment 22
Safety Evaluation 22

Deliverables and Schedules 30
Deliverables 30
Table 4: MAWS Program Bench-Scale
Demonstration Deliverables 31
Schedules 40
Figure 2: Proposed Schedule
for MAWS OU 1 Documents 41

Summary 44

References 45

REV. 2
June 12, 1992

INTRODUCTION

Purpose of Minimum Additive Waste Stabilization (MAWS) Regulatory Compliance Plan

This MAWS Regulatory Compliance Plan presents the regulatory compliance framework for conducting a bench-scale process development demonstration for Operable Unit (OU) 1. This document is intended to initiate a dialogue among the U.S. Environmental Protection Agency (USEPA), the Ohio Environmental Protection Agency (OEPA), the Department of Energy (DOE), and other organizations involved in remediation at the Fernald Environmental Management Project (FEMP) so that a consensus may be reached for implementing the regulatory aspects of the MAWS Program. Although the MAWS Program may eventually integrate treatment of wastes from the other OUs, this document addresses only the initiation of the bench-scale process development activity for treatment of OU 1 wastes.

Because there are a large number of regulatory and DOE departmental policy compliance issues involved in a program such as MAWS, OU 1 management understands the need and importance for a pro-active approach to develop and review technical and programmatic documents. Both Federal and State regulatory agencies, as well as the DOE, will need a clear understanding of the technical and regulatory aspects of the program. [A, 21.] Consequently, this document will provide information relating to MAWS to the DOE, USEPA, Westinghouse Environmental Management Company of Ohio (WEMCO), the OEPA, and the yet-to-be-chosen Environmental Remediation Management Contractor (ERMC) for FEMP.

In order to accomplish these goals and provide the necessary information, a brief background of the FEMP and an overview of the MAWS Program is provided in the following paragraphs.

Background of FEMP

The FEMP, formerly the Feed Materials Production Center (FMPC), produced high-purity uranium metal from the early 1950s until 1989 for the DOE defense nuclear fuel cycle. A wide variety of chemical and metallurgical processes were employed. These processes generated a significant quantity of waste material containing low levels of radioactive and hazardous constituents. Increased national emphasis on the environment has resulted in the evolution of new technologies and regulatory requirements regarding the management of these waste materials. [C, 2.] Consistent with this national emphasis on the environment, the USEPA issued a Notice of Noncompliance (NON) in March of 1985 identifying their major concerns over potential environmental impacts associated with past, present, and future operations at the FMPC. Consequently, in accordance with Executive Order 12088 (42 FR 47707), in July of 1986 a Federal Facilities Compliance Agreement (FFCA) was jointly signed by the DOE and

the USEPA. [C] The intent of this agreement was to ensure that the environmental impacts associated with past and present activities were thoroughly and adequately investigated. In December of 1989, the FEMP was placed on EPA's National Priorities List (NPL) of sites requiring environmental cleanup. As a result, in April of 1990 the DOE and EPA signed a Comprehensive Environmental Response, Compensation, and Liability Act (CERCLA) Consent Agreement which superseded the FFCA. [B, ES-1.] In May of 1991, USEPA and USDOE entered into a dispute resolution agreement regarding certain alleged violations of the 1990 consent agreement. Pursuant to the dispute resolution agreement, USEPA and USDOE agreed to amend certain terms of the 1990 consent agreement including the provisions relating to schedules for the completion of the RI/FS for the five operable units.

As part of the CERCLA process a comprehensive Remedial Investigation (RI) and Feasibility Study (FS) is underway at FEMP. A RI/FS is a comprehensive environmental investigation systematically conducted according to EPA regulations and guidelines. The RI phase incorporates a broad-based study to evaluate as completely as possible existing environmental and public health risks associated with past or existing facility operations. The FS phase develops and evaluates corrective action alternatives to mitigate identified environmental concerns. [D, 134.]

In order to accelerate the RI/FS process and focus on high priority concerns, the FS is divided into five operable units (OUs). Each OU is responsible for remediating a specific environmental media and/or site location. (See Table 1.) A Site - Wide RI/Risk Assessment and a Site - Wide FS are implemented including risks associated with more than one operable unit and to identify, evaluate and select alternatives for appropriate remedial actions.

The bulk of FEMP's waste comes from OUs 1, 2, 3, and 5. The wastes include pit wastes (OU 1), fly ash (OU 2), asbestos transite (OU 3), and soils (OU 5). [A, 2.] The final FS reports for each operable unit will evaluate a number of remedial action alternatives and recommend preferred ones.

Currently ex-situ solidification (making concrete) and vitrification (making glass) are being considered as the preferred treatment methods for many of the wastes. OU 1 alone contains approximately 450,000 m^3 of wastes and up to 700,000 m^3 of soil needing treatment. Tables 2 and 3 show the quantities and types of materials expected in OU 1. [A, 2.]

Table 1: FEMP Operable Units

Operable Unit 1	Waste Pit Area: Waste Pits 1-6, clearwell, burnpit, berms, liners and soil within the operable unit boundary as approved in the RI/FS work plan addendum.
Operable Unit 2	Other Waste Units: Flyash piles, other south field disposal areas, lime sludge ponds, solid waste landfill, berms, liners, and soil within the operable unit boundary as approved in the RI/FS work plan addendum.
Operable Unit 3	Production Area: Production area and production -associated facilities and equipment (include all above and below-grade improvements) including, but not limited to, all structures, equipment, utilities, drums, tanks, solid waste, waste, product, thorium, effluent lines, K-65 transfer line, wastewater treatment facilities, fire training facilities, scrap metals piles, feedstocks, and coal pile.
Operable Unit 4	Silos 1-4: Silos 1, 2, 3, and 4 berms, decant tank system, and soil within the operable unit boundary as approved in the RI/FS work plan addendum.
Operable Unit 5	Environmental Media: Groundwater, surface water, soil not included in the definitions of Operable Units #1-4, sediments, flora, and fauna.

OPERABLE UNIT 1 QUANTITIES
Table 2

	Average Depth m	Area m^2	Waste m^3	Cap m^3	Soil m^3	Total m^3
Pit 1	4.3	7 432	25 749	2 342	75 192	103 283
Pit 2	4.2	4 478	14 128	947	41 614	56 689
Pit 3	8.2	21 878	163 049	54 682	25 398	243 129
Pit 4	7.3	7 962	41 064	13 052	100 742	154 858
Pit 5	9.1	17 066	75 573	Open	184 028	259 601
Pit 6	7.3	3 010	8 836	Open	60 770	69 606
Clear Well	8.2	2 369	7 310	Open	28 326	35 636
Burnpit	6.1	1 858	6 938	616	12 180	19 734
Totals		66 053	342 647	71 639	528 250	942 536

OPERABLE UNIT 1 WASTE MATERIALS
Table 3

	Pit 1	Pit 2	Pit 3	Pit 4	Pit 5	Pit 6	Burn-pit	Clear Well	Total
Filter/sump cake	X	X				X			
Fly ash	X	X							
55-gal drums	X	X							
Slag and slag residues	X	X	X		X	X			
Raffinate			X	X	X				
Lime sludge			X		X				
Process Residues				X		X			
Noncombustible trash				X					
Asbestos				X		X			
Construction debris, concrete, etc.				X			X		
Green salt (uranium salts)						X			
Laboratory chemicals							X		
Waste oils, wooden pallets, etc.							X		
Stormwater runoff sediments								X	
Barium chloride, (lb. x 1,000)				23.5					23.5
Thorium, (lb. x 1,000)		<1	<1	137	37	unkn	unkn	unkn	174
Uranium, (lb. x 1,000)	120	2,700	290	6,700	110	1,900	unkn	unkn	11,820

REV. 2
June 12, 1992

Overview of the MAWS Program

FEMP has over 350,000 m^3 of pit wastes, over[1] 2,000,000 m^3 of potentially contaminated soils on site, and associated water that need remediation. Vitrification is attractive to some of the soils on site because organic contaminants are completely oxidized to carbon dioxide and water while radionuclides, heavy metals, and other inorganic contaminants are dissolved into the glass matrix which has a very low leach rate. However, the sludges in the waste pits do not make good glass because they do not contain sufficient silica-bearing compounds. The soils make a good glass but their melting point is too high for economical operation. Based on a preliminary results from the laboratory studies at Viterious State Laboratory (VSL) at the Catholic University of America (CUA), the pit wastes behave as a flux that lowers the soil melting point and together the pit wastes and soils make a good glass.

Besides the OUs at FEMP, many DOE sites have contaminated sludges, soils, and fly ashes needing remediation. Low-level radioactive and mixed waste remediation is a major concern at DOE sites around the country. Waste sludges, soils, fly ash, and other materials must be treated so they do not pose a threat to human health and the environment. These wastes tend to be primarily inorganic in nature and are present in large volumes. Consequently, an integrated technology demonstration which effectively uses the three media and is protective of human health and the environment will have wide application at other DOE and NPL sites. By implementing the MAWS Program as part of the RI/FS RD/RA processes under CERCLA and using mixed waste as well as low-level radioactive waste for the vitrification "feed", DOE will be developing an innovative and experimental hazardous waste treatment technology.

The MAWS Program is designed to take advantage of the fact that the pit wastes and soils make a good glass and related synergism to develop an efficient, minimum cost remediation process for soils, sludges, and other wastes found at the FEMP. Specifically MAWS will integrate soil washing (to separate contaminated soils from clean soils, hereafter denoted clean soils as <35 pCI/g), vitrification of mixed waste streams, and ion-exchange to remediate water from the soil washing process and the vitrification off-gas scrubber. Spent ion-exchange media will either be regenerated or combined with the other waste streams and vitrified.

---

[1] OU 1 soils and cap = 634,406 m^3 + 71,645 m^3 from Initial Screening of Alternatives. OU 3 soils under and around building = 764,600 m^3 from calculations for EWMF Study. OU 5 site soils = 611,680 m^3 calculated. Total = 2,082,331 m^3

The bench-scale process development demonstration for the MAWS Program will be performed by FEMP OU 1 which is responsible for the six waste pits, the clearwell, the burnpit, and the associated soils. The pit wastes and a portion of the soils require treatment. The major contaminants are uranium and thorium. Three of the components in OU 1 also contain RCRA hazardous wastes - drums of barium chloride were placed in Pit 4 and listed organic laboratory chemicals are thought to have been disposed in Pit 5. Clearwell is also a Hazardous Waste Management Unit (HWMU) due to the storm water over flow. The major cost driver at FEMP is not the fact that the materials are radioactive, but rather, the large quantities of materials requiring remediation. The soils and sludges which will be fed to the MAWS bench-scale demonstration will come from the wastes existing within OU 1. For this bench-scale demonstration, feed soils will be taken from locations other than hazardous waste management units, i.e. for this demonstration only non-RCRA soils will be used. Pit 5 will be the first pit to be used. Subsequently, Pit 6 and Clearwell will be used after a successful treatment demonstration of Pit 5 material.

The MAWS Program is designed to quantify the significant savings possible by effectively integrating remediation technologies and waste streams. Specifically the following concepts will be demonstrated:

- <u>Blending site wastes will eliminate or minimize costly additives for the vitrification process</u>

  All the constituents for making glass can be obtained by blending the various site waste streams in correct proportions. This eliminates the need for buying expensive additives normally required to produce glass from wastes.

- <u>Integrating site waste streams will result in a net reduction in volume of waste</u>

  Treating wastes individually would require additives which would add to both the volume of the treated waste and the remediation cost. Integrated treatment of waste streams minimizes the final volume of treated waste.

- <u>An optimal integrated system may not need optimal processes</u>

  Washing to remove contaminants from soils can operate at lower performance levels since the contaminated soils will be mixed with pit sludges to make glass. Also, recycled or contaminated water can be used instead of clean water for the soil washing since it is a closed loop cycle to prevent it from contacting any RCRA material. Integration of remediation processes allows for optimization of the overall process rather than individual treatment steps, reducing overall costs and treated waste volume.

Environmental protection requirements are incorporated into each step of the MAWS process. The integrated process is designed so that the effluent streams meet discharge requirements and all discharges are monitored to ensure compliance. The effluent streams are:

- Glass (low-level radioactive waste) from the vitrification process
- Clean soil from the soil wash process
- Clean water from the ion-exchange treatment process
- Off-gases (scrubbed and filtered through a HEPA filter) primarily from the vitrification process

The over-all effect will be long term protection of human health and the environment.

PROCESS DEFINITION AND DESCRIPTION

As a part of the RI/FS for OU 1 a treatability study is underway at IT Corporation. That treatability study will evaluate the feasibility of vitrification as a remediation technique for OU 1. The preliminary findings of this treatability study indicate vitrification is feasible, and thus, is an option for remediation. The bench-scale process demonstration of the MAWS Program will take place within the boundaries of the FEMP and will demonstrate the integrated technologies to achieve a net volume reduction of wastes for OU 1.

Currently two types of laboratory studies are in progress. The laboratory studies (Treatability Study Work Plan For Operable Unit 1) at IT Corporation, mentioned above, cover the remedy screening and remedy selection for OU 1. The laboratory studies at Catholic University of America (CUA) is currently on going starting with crucible studies to support the treatability study - laboratory scale. The CUA will be continuing with the 10 Kg melter studies and 100 Kg melter studies at CUA before installing the 300 Kg melter (Bench - Scale) on site. This laboratory studies will support the remedy design and remedy selection. The Treatability Study Work Plan - Remedy Design Laboratory Studies Vol. 1, Vitrification, is scheduled to be submitted to EPA in June, 1992. Since vitrification technology has not been demonstrated for large volumes of waste, this bench-scale process development demonstration of the MAWS Program should provide the necessary design criteria for a pilot plant. This demonstration will provide data to confirm OU 1 treatment alternative selection and to support technical feasibility prior to the Record of Decision (ROD) which is scheduled for December 1994. Data from the MAWS Program should also be useful to other NPL sites which have not yet determined their cleanup alternatives.

MAWS Subsystems

The process equipment for the MAWS bench-scale demonstration will be installed in the south-east open bay of FEMP Plant 9. The three major subsystems of the demonstration treatment

process will be:

- Vitrification system (GTS Duratek Corporation)
- Soil wash system (AWC Lockheed Corporation)
- Ion-exchange water treatment system (GTS Duratek Corporation)

The vitrification system capacity will nominally be 300 kg/day of equivalent dry feed/glass product, but expected process optimization may result in a major increase in throughput. The soil wash system will be capable of handling 0.25 cubic yard of soil per hour. The ion-exchange water treatment system will be sized to treat 100 gallons per minute (70 gpm nominal) of contaminated water. Support facilities will include incoming and in-process material storage area, a staging area for feed makeup materials, a melter feed mixing station and an off-gas treatment system.

The system description details presented below are based on and assume full integrated operation of the complete MAWS process. Nominal ranges, and/or maximum plant throughput, process parameters, or other assumptions have been made, as necessary. The system description follows Figure 1: The MAWS Process Diagram (GTS Duratek Drawing MAWS-BG-002, Revision O) unless otherwise noted.

Incoming Storage Area

The Incoming Storage Area will have adequate space for storage in 55 gallon drums, or other appropriate containers, of the demonstration materials, additives, and waste streams needed for about two weeks of operation of the vitrification process. The waste soils and sludges will be transported from their source locations to the MAWS Incoming Storage Area in closed 55 gallon drums. This drum storage area will be designed to meet RCRA 40 CFR 264 standards for drum storage areas.

Although the MAWS process is designed to minimize the use of additives, some may be required. Additive requirements are currently being assessed in waste characterization studies being conducted at the Catholic University of America Vitreous State Laboratory. Present estimates are that chemical additives would constitute between 0 and 20 wt% of the final glass on an oxide basis. Potential oxide additives are Na_2O, B_2O_3, and CaO. Likely sources for these materials are $Na_2CO_3 \bullet xH_2O$, (sodium carbonate), $Na_2B_4O_5(OH) \bullet xH_2O$ (borax), $H_4BO_4 \bullet xH_2O$ (boric acid), $Ca(OH)_2$, or $CaCO_3$. Laboratory studies will determine which, if any, of these materials are needed for the on-site vitrification process.

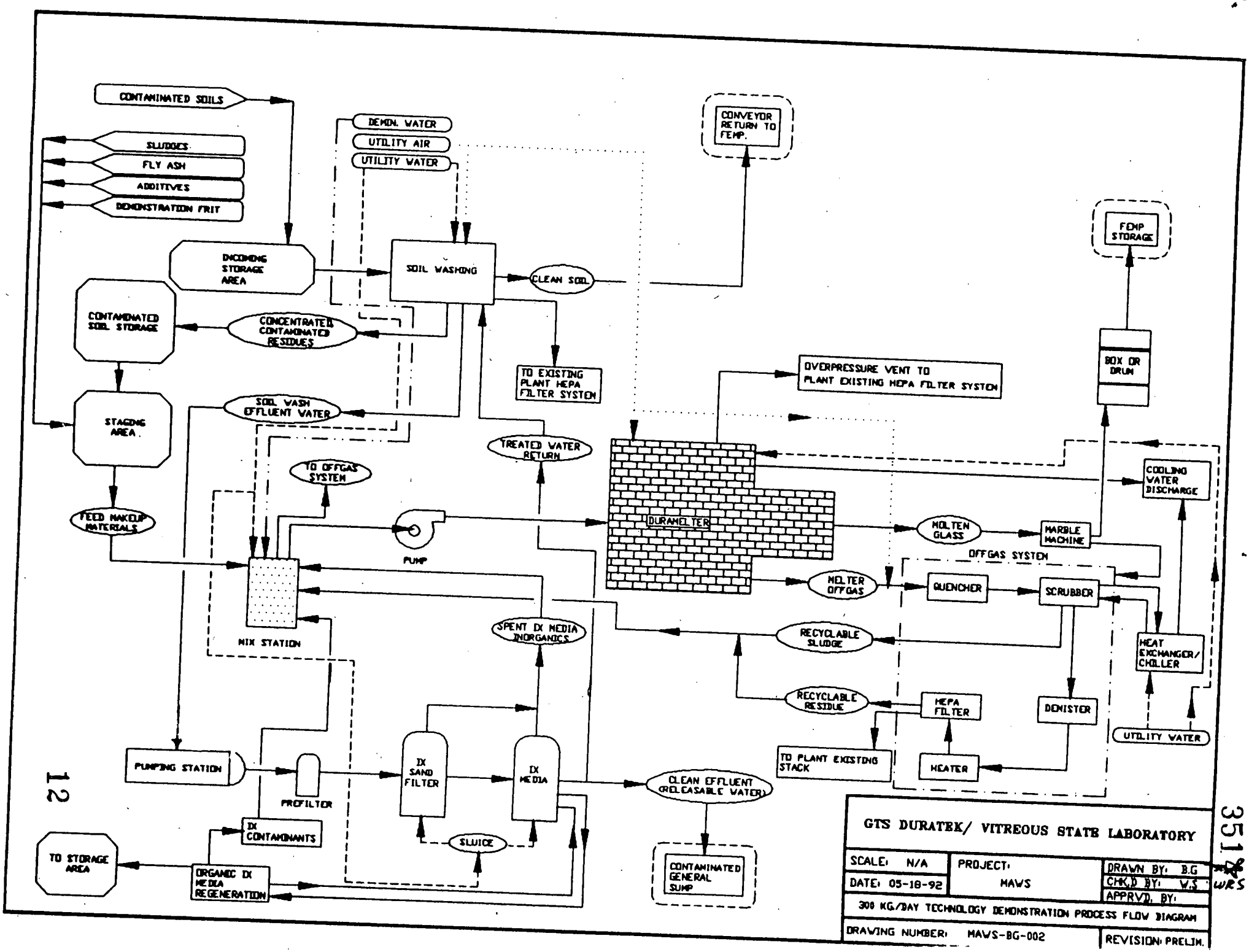
CONTAMINATED SOILS
SLUDGES
FLY ASH
ADDITIVES
DEMONSTRATION FRIT
DEMIN. WATER
UTILITY AIR
UTILITY WATER
CONVEYOR RETURN TO FEMP.
FEMP STORAGE
INCOMING STORAGE AREA
SOIL WASHING
CLEAN SOIL
CONTAMINATED SOIL STORAGE
CONCENTRATED CONTAMINATED RESIDUES
TO EXISTING PLANT HEPA FILTER SYSTEM
OVERPRESSURE VENT TO PLANT EXISTING HEPA FILTER SYSTEM
BOX OR DRUM
STAGING AREA
SOIL WASH EFFLUENT WATER
TREATED WATER RETURN
TO OFFGAS SYSTEM
COOLING WATER DISCHARGE
FEED MAKEUP MATERIALS
PUMP
DURAMELTER
MOLTEN GLASS
MARBLE MACHINE
OFFGAS SYSTEM
MELTER OFFGAS
QUENCHER
SCRUBBER
MIX STATION
SPENT IX MEDIA INORGANICS
RECYCLABLE SLUDGE
HEAT EXCHANGER/ CHILLER
RECYCLABLE RESIDUE
HEPA FILTER
DEMISTER
UTILITY WATER
PUMPING STATION
PROFILTER
IX SAND FILTER
IX MEDIA
TO PLANT EXISTING STACK
HEATER
CLEAN EFFLUENT (RELEASABLE WATER)
IX CONTAMINANTS
SLUICE
TO STORAGE AREA
ORGANIC IX MEDIA REGENERATION
CONTAMINATED GENERAL SUMP
GTS DURATEK/ VITREOUS STATE LABORATORY
SCALE: N/A
PROJECT: MAWS
DRAWN BY: B.G
DATE: 05-18-92
CHK'D BY: W.S
APPRV'D. BY:
300 KG/DAY TECHNOLOGY DEMONSTRATION PROCESS FLOW DIAGRAM
DRAWING NUMBER: MAWS-BG-002
REVISION: PRELIM.

351 WRS

Soil Washing

The soil washing system is a multi-step process which separates contaminated soil fractions from the surrounding "clean soil". The soils used in the MAWS bench-scale demonstration will have low-level radioactive contamination only. They will be obtained from locations on FEMP sites where the soils have been characterized (excluding hazardous waste management units). The soils will be stored in drums in a fashion consistent with the associated hazard. The soil washing process consists of the following treatment steps; specific process conditions will be based on the results of treatability studies (using FEMP soils) at AWC Lockheed's Soil Laboratory.

Contaminated soils will be mixed with either contaminated, recycled, or potable water (as available) in a rotating scrubber/screen. This step will loosen and scrub soil from organic debris, will break-up lumps and will perform a rough size separation. Coarse material from this process, if any, will be hand monitored and released or returned for further scrubbing. The fine material will then pass through an attrition scrubber which will break-down soil agglomerates and reduce soil to individual discrete particles as a pretreatment for further size separation. This scrubbed slurry will then pass through a gravimetric separator which removes any large (>75 micron) high-density particles from the slurry. The gravimetric separator will also provide additional scrubbing action. The contaminated slurry will then feed to an hydrocyclone which will separate the fine soil particles from the coarse soil particles and will also partially dewater the coarse fraction. The coarse fraction (typically >50 microns in size) will then be dewatered in a screw classifier. This material will go past the radiation verification monitor, a computer-controlled array of sodium iodide detectors mounted above a conveyor belt. This will allow full-time, on-line monitoring of soil with less than 35 picocuries (FEMP site criteria until the risk analysis in RI/FS is completed)per gram dry weight contamination. These soils will be deposited onto a pad for redistribution within the Fernald site according to the FEMP Soil and Debris Management Plan (pending EPA approval). The soils used in the soil washing process will be collected from the areas on site which have the similar characterization results. If the soil source location changes the characterization will be done on the soils from the new source location.

The fine (<50 micron) fraction from the hydrocyclone will be fed to an ultracentrifuge where a soil concentrate will be collected and stored in drums as a siliceous feed for the vitrification melter. The contaminant-laden water will be sent to the ion-exchange water treatment system for contaminant removal, monitoring, and eventual discharge.

Water Treatment System

The water treatment system will 379 liters per minute (265 liters per minute nominal) of uranium contaminated water from the soil wash process, melter off-gas scrubber, or external sources. The water will be pumped through a prefilter, sand filter, and ion-exchange (IX) vessel. The

ion-exchange media may be Dowex 21K or another material. The effluent water will contain a maximum of 20 parts per billion (ppb) uranium. At this time the water will be recycled to either the soil washing system or the vitrification system off-gas scrubber. The water generated from soil washing and the water that did not contact RCRA waste will be sent to a holding tank in the Contaminated General Sump and held until the water is analyzed to verify RCRA or NPDES permit limits are not exceeded. Discharging the water to the Contaminated General Sump will ensure it is included in the FEMP's water discharge monitoring system prior to release to the Great Miami River and will help ensure compliance with the FEMP's NPDES discharge permit.

Spent IX media will be disposed of in the vitrification process, or in the case of Dowex 21K, will be regenerated by an acid stripping process. The uranium will be recovered from the acid and fed into the vitrification system. Thus, the waterborne contaminants will be incorporated into the glass waste product.

Staging Area/Mix Station

Vitrification feed materials and any required additives will be moved to the staging area/mix station. The area in which drums will be opened for transferring the sludges to the feed system vessels will be partitioned, diked, and separately ventilated and exhausted to the MAWS off-gas system. Sludges will be transferred by using a slurry pumping system which will pump the sludge directly from the drums to the feed system vessels. The use of drums with two bung holes in the lid to minimize the time the sludge is exposed to the atmosphere will be investigated. A stirrer will be inserted through one hole to suspend the slurry while the pump intake will be inserted through the second hole. The feed system vessels will be maintained under slight negative pressure by exhausting the headspace to the MAWS off-gas system.

Using bulk volume and/or weight ratios, a "feed" batch of the various "feed" streams will be prepared for approximately one week of vitrification operation. The various materials will be transferred into one of two 11355 liters mixing vessels where they will be blended using mechanical stirrers. Whether the "feed" from the mixing vessels to the melter will be "slurry feed" or "drier/as-is feed" has not yet been determined and will depend on materials tests and trials on actual FEMP materials. If the slurry option is used, water will be added to maintain approximately 70-80% total water content. The slurry will then be pumped into the melter. The "drier/as-is" feed, which is preferred would contain 50-70% water, which would be fed to the melter using an appropriate mechanical pump, screw or hydraulic feed device.

Vitrification System

The vitrification system utilizes a joule-heated furnace, is capable of melting a wide range of low conductivity waste materials with minimal additives at moderate temperatures, and consistently

produces a stabilized glass with minimal effluent. The furnace is lined with high temperature refractory bricks and would operate in the range of 1050 to 1200°C for this bench-scale demonstration project. The unit will use Inconel 690 plate electrodes. Furnace and melt chamber temperatures will be controlled by power adjustment to the joule heater and supplemental area heaters. The furnace feed tubes and other components will be cooled by chilled water from the system cooling tower. The cooling water will never contact the material being treated and, therefore, will remain uncontaminated. The 300 kg/day system will have a nominal operating volume of molten glass of about 60 liters.

Although the melt chamber contains molten glass, the system is inherently safe. In the unlikely event of a leak, the molten glass would flow very slowly and rapidly solidify as its temperature drops. In the event of the release into the room environment the constituents in the glass will be contained by rapid solidification. This behavior is due to the fact that the MAWS glasses will be highly viscous at temperatures below the processing temperature maintained in the melter. Exposure to air will result in rapid cooling and therefore, immediate solidification since the viscosity rises exponentially with decreasing temperature.

During operation, air may be introduced into the furnace melt chamber for process control and to lift the glass to the exit chamber.

The molten glass produced will be fed to a marble machine or alternate device to produce a glass product that can be stored in drums or boxes. Marbles of two sizes will be produced to improve packing and minimize the bulk volume of the waste glass. Marble shapes are easier to handle and to make than flat sheets therefore the production rate is higher. Flat sheets will cause camber and will break and slip during stacking.

The glass produced will be tested to ensure effective contaminant stabilization. Test procedures will include the Toxicity Characteristic Leach Procedure (TCLP), the Product Consistency Test (PCT), and test of other constituents of concern. These tests will ensure the integrity of the glass waste form for both radioactive and non-radioactive contaminants.

The final glass product will be stored in a RCRA storage facility until the characterization is completed at which time (if the glass passes the tests) the permission will be requested to store the glass in a non-RCRA storage facility consistent with radiological controls.

Off-Gas Treatment System

An off-gas treatment system will treat the gaseous discharge from the vitrification system as well as the minor streams from other processing areas, such as the mix station and marble machine. The off-gas treatment system will be composed of standard industry components and will include:

- Quencher (to reduce the melter off-gas temperature)
- Scrubber (to remove acid gases, soluble particulates, and micron size insoluble particulates)
- Mist eliminator (for aerosol coagulation)
- Booster blower
- Heater (for dew point control)
- High Efficiency Particulate Air (HEPA) filter (to remove any residual fine particulates)

The off-gas flow from the vitrification system should not exceed 175 standard cubic feet per minute (scfm) at the mist eliminator and 1500 acfm at the stack. The discharged gas will be composed of oxygen, nitrogen, carbon dioxide, and water vapor. The temperature of the gases discharged from the stack will not exceed 120°F. Stack effluents will be sampled isokinetically to ensure contaminant-free emissions. The existing facility has a HEPA filters in addition to the built in HEPA with the melter.

Radon Emissions

No data are presently available on direct measurements of radon emanation rates. However, radiological data from the Roy F. Weston Characterization Investigation Study (CIS) may be used to develop some initial estimates. For Pit 5 material, ^{222}Rn is the isotope of most concern and has a half life of 3.8 days. This isotope is formed by decay of ^{226}Ra with expected levels, from CIS data, between 235 and 999 nCi/g. Due to the high solubility of radon in water we would expect a similar steady state activity of ^{222}Rn to be present in the aqueous component of Pit 5 sludge. These activities are many orders of magnitude below the estimated saturation concentration of radon in water and therefore equilibrium vapor activities are expected to be minimal compared to releases during melting (these can be estimated if Henry coefficient data can be obtained).

Thus, the major source of radon emission will be the volatilization of the aqueous component of the sludge in the melter since this will release the dissolved radon. Using high-end estimates of processing rates of 2333 kg sludge/day and an activity of 999 nCi/g (the CIS maximum) we obtain a radon release rate of 1.6 μCi/minute. The nominal off-gas flow rate is 1350 acfm (at 120°F) which yields a radon concentration of about 40 pCi/liter before any radon capture device. This maximum level is only ten times larger than the recommended 4 pCi/liter limit for air in US homes. The ^{222}Rn emission rate into the off-gas system is expected to be about 2.3 μCi/kg of glass produced.

The high solubility of radon in water (a saturation concentration at 25°C which corresponds to an activity of about 3 x 10^5 Ci/liter) suggests that radon emissions will be greatly reduced by the off-gas system water scrubber unit. With the scrubber solution recycled to the melter, the radon

decay products will ultimately reside in the glass product. Laboratory tests will determine the effectiveness of the scrubber unit in reducing radon emissions and the need for any supplementary radon capture systems.

Monitoring of Discharges

Effluent discharges from the MAWS bench-scale demonstration will be:

- Glass (low-level radioactive waste) from the vitrification process
- Clean soil from the soil wash process
- Clean water from the ion exchange treatment process
- Off-gases (scrubbed and filtered through a HEPA filter) primarily from the vitrification process

The glass produced will be tested by the standard TCLP, PCT, and tests of other constituents of concern to ensure that the contaminants are effectively stabilized within the glass matrix.

The soil with an activity less than 35 picocuries per gram dry weight will be continuously monitored prior to discharge. It will be monitored by a computer-controlled array of sodium iodide detectors mounted above the conveyor belt on which the soil will be traveling.

The discharge water will be sampled to ensure that it contains less than 20 ppb uranium. This water will either be recycled or discharged to the FEMP Contaminated General Sump. From the Contaminated General Sump, it will join the other FEMP water discharges which are monitored to ensure compliance with the FEMP's NPDES discharge permit.

The off-gases, primarily from the vitrification system, will be treated to lower their temperature, remove acid gases (e.g. sulfur dioxide), soluble particulates, and fine particulates. Stack gases will be sampled isokinetically to ensure that they are contaminant-free.

REGULATORY REQUIREMENTS AND IMPLEMENTATION

The regulatory requirements which are discussed in this section are for that portion of the MAWS Program to be conducted as the bench-scale vitrification process development study for OU 1 as described in the Process Development Program Plan for Operable Unit 1. A work plan, OU 1 Treatability Study Work Plan - Bench Scale Vitrification (MAWS), describing the study and addressing the regulatory requirements will be submitted to USEPA and OEPA for review. EPA RCRA and CERCLA groups, along with water and air permitting personnel, will be encouraged to participate.

CERCLA, Section 121

Cement solidification and vitrification are the preferred competing treatment methods for OU 1. The MAWS Program can be considered an intermediate step in a CERCLA remedial action since it will provide data to demonstrate feasibility and to determine which treatment alternative will be used for full-scale remediation. Consequently, Section 121(e) of CERCLA (40 CFR 330.400(e)) applies. This section states

> (e) Permits and enforcement-.
>
> (1) No Federal, State, or local permit shall be required for the portion of any removal or remedial action conducted entirely on site, where such remedial action is selected and carried out in compliance with this section.

While no additional permits are required for the MAWS Program by the strict interpretation of this guidance, CERCLA and the Consent Agreement, quoted below, makes it clear that the substantive reporting requirements of the appropriate permits must be submitted. The appropriate permits and the format of the planned submissions are discussed later in this document.

Consent Agreement, Section XIII. PERMITS

This section of the Consent Agreement, as amended under CERCLA Sections 120 and 106(a), states:

> A. U.S. EPA and U.S. DOE recognize, under Section 121(d) and 121(e)(1) of CERCLA, 42 U.S.C. 9621(d) and 9621(e)(1) and the NCP, that portions of the response actions under this Agreement and conducted entirely on the Site are exempt from the procedural requirement to obtain Federal, State, or local permits. U.S. DOE must satisfy the Federal and State standards, requirements, criteria, or limitations that would have been included in any such permit to the extent required by CERCLA and the NCP.

B. When U.S. DOE proposes a response action to be conducted entirely on the Site, which in the absence of Section 121(e)(1) of CERCLA and the NCP would require a Federal or State permit, U.S. DOE shall include in its submittal to U.S. EPA:

1. Identification of each permit that would otherwise be required;

2. Identification of the standards, requirements, criteria, or limitations that would have had to have been met to obtain each such permit; and

3. Explanation of how the response action will meet the standards, requirements, criteria, or limitations identified in item 2 above.

Consequently, the OU 1 Treatability Study Work Plan - Bench Scale Vitrification (MAWS), to be submitted by the DOE to USEPA, will contain either a section or an addendum containing the information above for each of the following:

1. A RCRA research, development, and demonstration permit per Section 3005(g) of RCRA for the bench-scale demonstration

2. National Emission Standards for Hazardous Air Pollutants (NESHAP) (40 CFR 61)

3. Modifications to the existing NPDES permit, if required, for the wastewater which will go into the Contaminated General Sump

4. Construction permits (Permit to Install and Permit to Operate) as required by the State

5. National Environmental Policy Act (NEPA) documentation.

A detailed discussion of each of these five regulatory areas follows.

RCRA, Section 3005 (g) - RCRA Research, Development, and Demonstration Permit

All new facilities for the treatment, storage, or disposal of hazardous waste are required to be permitted pursuant to RCRA Section 3005. However, there are several different ways this may occur - a normal treatment, storage, or disposal permit (a,b,c,d); an interim status permit (e); a coal mining wastes and reclamation permit (f); or a research, development, and demonstration permit (g). In the case of a research, development, and demonstration permit, the Administrator may establish the conditions of the permit - i.e. the Administrator may determine which portions, if any, of the 40 CFR 264 standards apply.

One of the wastes which will make up the "feed" for the vitrification portion of this bench-scale demonstration will be obtained from Pit 5. Because Waste Pit 5 has been designated as a Hazardous Waste Management Unit (HWMU), RCRA statutes for the treatment and storage of hazardous waste (40 CFR 264) would be required if the treatment were other than "an innovative and experimental hazardous waste treatment technology or process for which permit standards for such experimental activity have not been promulgated under this subtitle". Because of RCRA Section 3005(g), the requirements are basically open to discussion and agreement among the DOE, USEPA, and OEPA. This conclusion is based on the portions of the quote below which are bolded.

The RCRA Research, development, and demonstration permits section states:

> (1) The Administrator may issue a research, development and demonstration permit for any hazardous waste treatment facility which proposes to utilize an innovative and experimental hazardous waste treatment technology or process for which permit standards for such experimental activity have not been promulgated under this subtitle. **Any such permit shall include such terms and conditions as will assure protection of human health and the environment. ...**
> Such permits -
>
> > (A) shall provide for the construction of such facilities, as necessary, **and for operation of the facility** for not longer than one year [unless renewed as provided in paragraph (4)], ...
>
> **The Administrator may apply the criteria set forth in this paragraph in establishing the conditions of each permit without separate establishment of regulations implementing such criteria. ...**

(2) For the purpose of expediting review and issuance of permits under this subsection, **the Administrator may, consistent with the protection of human health and the environment, modify or waive permit application and permit issuance requirements established in the Administrator's general permit regulations ... .**

RCRA Section 3005(g) allows USEPA to issue a Research, Development, and Demonstration Permit "for any hazardous waste treatment facility which proposes to utilize an innovative and experimental hazardous waste treatment technology or process ... ." The MAWS bench-scale vitrification program clearly falls in this category because it is a program developing and demonstrating the use of vitrification for low level wastes coupled with soil washing and water treatment development. Furthermore, the Administrator may state as part of the research, development, and demonstration permit the type of storage required.

NESHAP

Three sections of NESHAP are applicable. They are Subparts H, M, and Q.

Subpart H - National Emission Standards for Emissions of Radionuclides Other Than Radon from DOE Facilities

An estimate of emissions from both the excavation work (contaminated soils and/or waste pit material) and from the soil washing/vitrification/wastewater treatment process in Plant 9 will be required to determine if and application under NESHAP Subpart H will be required. Sitewide compliance will use these estimates to conduct a compliance model (COMPLY) to estimate the effective dose equivalent (EDE) to the nearest off-site receptor. If this EDE is greater than 0.1 mrem, an application will be required.

Subpart M - Asbestos Emission

Structures in Plant 9 may contain asbestos or asbestos containing materials that will be affected during construction activities. Notification of the EPA will be given within the existing FEMP construction project procedures prior to demolition or modification of those Plant 9 structures containing asbestos. Pit 5 does not contain asbestos. However, if the MAWS demonstration proves successful and development of the process for the other waste pits were to continue, a determination and possible Subpart M application for treatment of Pit 6 submitted.

Subpart Q - Radon Emission

An estimate of potential radon emissions will be done to determine compliance with the radon standard for DOE facilities. The standard is 20 pCi/m^2-sec. There are no reporting or application requirements applicable to the FEMP under this subpart, but will be included in the Information Summary attachment/addendum to the work plan.

NPDES

The existing FEMP site-wide NPDES permit should be adequate for the discharge of wastewater from the bench-scale facility. The contaminated water will be used in the vitrification process while the clean or treated water will go to the Contaminated General Sump and then to existing or planned FEMP site-wide water treatment facilities.

In addition to the effluent limitations, the NPDES permit requires the reporting of CWA Sec. 307 toxics discharged on either a routine or nonroutine basis. This reporting is based on notification levels listed @ 40 CFR 122.42. Therefore, the effluent from the MAWS waste water treatment system will be sampled for those toxics that could be present based on best available chemical data for the waste pits, e.g., arsenic. This will enhance permit compliance and provide valuable information on the potential pollutants of concern upon scale-up.

OEPA Permits

An air Permit to Install (PTI), air Permit to Operate (PTO), and a wastewater PTI are required by the State of Ohio for the new sources of pollutants. The OU 1 Treatability Study Work Plan - Bench Scale Vitrification (MAWS) will provide emission data which would be required by the PTO and PTI in the absence of the CERCLA Section 121(e) exemption.

NEPA Requirements

A new 10 CFR 1021 ruling concerning Categorical Exclusions (CAT.EX) was approved April 24, 1992 and became effective May 26, 1992. CAT.EXs concerning bench and small pilot facilities are applicable to the MAWS demonstrations. NEPA determinations and documentation will be provided by OU 1 personnel through the Fernald CERCLA activities. A Categorical Exclusion (CAT.EX) is being processed to meet the NEPA requirement.

HANDLING AND STORAGE OF VITRIFIED WASTE

Treated Waste Performance Assessment

The MAWS Program in general, and the bench-scale demonstration in particular, will include extensive testing concerning the quality, consistency, homogeneity, leachability, and durability of the product glass. Argonne National Laboratories will perform these studies. One of the

aims will be to determine and document the long-term performance of the vitrified waste and what storage conditions are required [A, 12.]. Based on current information, the Argonne studies are expected to demonstrate that human health and the environment are adequately protected when the vitrified wastes are stored in less costly, less elaborate, non-RCRA storage areas.

Storing the Bench-Scale Waste

As part of the RCRA research, development, and demonstration permit, FEMP will request the vitrified waste be stored in non-RCRA storage areas.

The final glass product will be stored in a RCRA storage facility until characterization is completed. Regarding the issue of "third - third" waste streams, the treated wastes from CUA for the laboratory studies will be accepted back on site under the "Non - Discretionary Wastes". The characterization tests will be conducted verify effective contaminant stabilization. Test procedures will include the Toxicity Characteristic Leach Procedure (TCLP), the Product Consistency Test (PCT), and test of other constituents of concern. These tests will ensure the integrity of the glass waste form for both radioactive and non-radioactive contaminants.

If the glass passes the characterization tests, permission is requested to store the glass in non-RCRA facilities consistent with its radiological hazard until (1) the Engineered Waste Management Facility (EWMF, storage facility) is available for the OU 1 remedial action or (2) the wastes are delisted (or deregulated). FEMP has already conducted a delisting assessment study for the waste in Pit 5 and this study is discussed below.

Delisting Assessment Study

FEMP conducted a Delisting Assessment Study for the Contents of Waste Pit 5. [F] This document states:

> The potential for delisting the contents of Waste Pit 5 from regulations under RCRA is being considered under provisions set forth in 40 CFR 260.20-22 and Ohio Hazardous Waste Management Regulations OAC 3745-50-221. The objective of a delisting petition, which could apply to the waste either **before** or **after** treatment, would be to successfully demonstrate that the waste currently located in Waste Pit 5 does not contain listed wastes in concentrations that
>
> (1) would exceed RCRA limits
> (2) would exhibit the characteristics of ignitability, corrosivity, reactivity, or toxicity
> (3) would exceed regulatory criteria for land disposal

(4) pose threat to human health or the environment

The delisting petition might also demonstrate that "although the waste contains the listed constituents, they are present in an immobile form". [F, 1; G, 1]

Waste Pit 5 was determined to be an Hazardous Waste Management Unit (HWMU) during the summer of 1991. The determination was based on process knowledge, the "mixture" rule, and the "derived from" rule of RCRA even though the RCRA constituent (1,1,1 trichloroethane) has not been found in concentration levels surpassing TCLP tests.

U.S. Environmental Protection Agency (EPA) has removed and reissued 40 CFR Section 261.3, including the "mixture" and "derived - from" rules on an interim basis. EPA intends to publish a proposed rule that would exempt from Subtitle C regulation listed wastes that meet a concentration - based exemption criteria. This will not be effective until the rule is finalized however, in the meantime, FEMP plans to initiate a dialogue with DOE, EPA, and OEPA concerning delisting. Results from the MAWS Phase 1 Characterization and Laboratory Studies are expected to be helpful in delisting. The impact delisting will have on Record of Decision (ROD) and the remedial action for OU 1 has not yet been fully evaluated.

An Approach to Delisting Pit 5 Wastes

As an addition to the MAWS project, a set of experiments may be undertaken to determine whether vitrification can treat Pit 5 wastes sufficiently. If vitrification is successful, Pit 5 wastes could be certified non-RCRA. In these proposed experiments, wastes would be spiked with 1,1,1, trichloroethane and other relevant constituents (such as barium and arsenic) at the highest concentrations expected to be found in Pit 5. This spiked mixture would undergo vitrification; then, samples of the glass, off-gases, and scrubber water would be evaluated as to the destruction or stabilization of these RCRA constituents, including any residual possibly remaining in the glass. Strict quality assurance criteria would be enforced to insure the quantitative validity of these tests. A petition to delist the treated Pit 5 wastes would be submitted if these experiments demonstrate that all added chemicals are destroyed or stabilized (the glass passes the TCLP test) and if the chemicals meet the other requirements of non-RCRA wastes. The petition would document the tests performed, the quality assurance procedures used, and the data obtained.

Processing Wastes Other Than Pit 5

If the MAWS process is successful in Phase 1 and the initial part of Phase 2, the process will be used to develop formulas and processes for other waste pits and FEMP wastes during the rest of Phase 2. Most of these wastes are non-RCRA, and it is important to maintain their non-RCRA identity. Therefore, when the melter is run with RCRA wastes, it will be flushed with

non-RCRA wastes to remove the residual RCRA wastes. Hence the identity of non-RCRA wastes put into the melter on future occasions will be maintained. Flushing the melter with three melt volumes should be sufficient to remove residual RCRA wastes. Verification of RCRA waste removal will be obtained by using a tracer material in the glass melt.

Filters and other process equipment used in the melter will be treated as a RCRA waste once contacted with other RCRA wastes until equipment is replaced with new components.

MEETING REGULATORY REQUIREMENTS AND GUIDANCE

Protecting Human Health and the Environment

The MAWS process will be a very effective tool in remediating the large quantities of soil, sludge, and other wastes at the FEMP. Immobilization of the radioactive and destruction or immobilization of non-radioactive contaminants in these matrices will significantly reduce the potential for these pollutants to be carried into aquifers or, during dry periods, being picked up by the wind and blown outside the FEMP site.

Residual contamination will be stabilized in the glass produced by the MAWS process. In the demonstration phase, the glass product will be packed in 55 gallon drums, but other options may be considered in the full-scale system to further minimize storage volume requirements. Residual contaminants in the glass will be heavy metals and other inorganics, and the radionuclides (making the glass a low-level radioactive waste). These contaminants will be intimately bound in the glass matrix which will be designed to pass the EPA's TCLP test. Organic contaminants in the feed to the MAWS system will be oxidized to carbon dioxide and water in the vitrification system.

The other discharges from the MAWS process will be treated soil, water, and off-gases which will be monitored to ensure compliance with environmental regulations. Recycling of the treated water will minimize the amount of fresh water required by the system.

Thus, MAWS will be an efficient process to remediate the large volumes of low-level radioactive and mixed wastes at the Fernald site in an environmentally safe manner, minimizing final waste storage volume and long-term costs.

Safety Evaluation

The assumptions for the project in the Preliminary Engineering Evaluation (PEE) [J] for the OU 1 MAWS Program are:

- an inventory of the material within Plant 9
- radiological surveys of Plant 9
- walkdowns of the proposed work area
- process flow charts and descriptions for the soil washing, wastewater treatment, and vitrification processes
- discussions with Duratek personnel

The primary safety assumptions used to determine both the preliminary project safety recommendations for the use of Plant 9 as the bench-scale MAWS demonstration site are outlined below.

Industrial Safety

1. Construction work and MAWS bench-scale operations will be performed according to OSHA regulations (e.g., 29 CFR 1910.120) and the appropriate DOE ARARs and WEMCO procedures identified for OUs.

2. Appropriate operating procedures will be developed and followed for the equipment, electrical cables, etc. associated with the large quantities of electricity required to run the bench-scale system.

Radiation Protection

3. Personnel will adhere to the requirements stipulated a Radiation Work Permit (RWP) for this area and the activities which will be associated with it. The RWP will be written in adherence to the appropriate DOE ARARs and WEMCO procedures identified for OUs.

Wastewater Cleaning Operation

4. The dose rates associated with the wastewater will be inconsequential (within the FEMP NPDES discharge limits) with no significant contribution to the general area dose rate (0 to 2 ppb uranium).

5. The ion-exchange resin and other filters related to this bench-scale operation will be replaced when the water concentration starts to rise (normally between 0 and 2 ppb uranium) or approaches 20 ppb uranium, so the dose rates associated with this material are expected to be low so that it makes no contribution to the general area dose rate. However, this will be evaluated when the system is in operation.

6. Activities associated with the operation and maintenance of the wastewater

treatment operation, including disposal of resins, will be performed in accordance with the appropriate and applicable DOE/WEMCO procedures.

Soil Cleaning Operation

7. Adequate staging and storage areas (conforming to ARARs, specifically RCRA storage requirements) will be developed to handle both the inputs (contaminated) and the outputs (both clean and contaminated) associated with the MAWS bench-scale demonstration.

8. Because the material to be vitrified has uranium as its primary contaminant, with very low levels of other radionuclides, the dose rates associated with the contaminated soil would be inconsequential. Consequently, it will not contribute significantly to the general area dose rate. Dose rates from the contaminated sludge in Pit 5 range from 0.17 to 2.38 mR/hr for mixed beta/gamma fields and from 0.068 to 0.58 mR/hr for gamma only. [K]

9. Activities associated with the operation and maintenance of the soil cleaning operation will be performed in accordance with the work plan and FEMP procedures to ensure personnel and operational safety.

Bench-Scale Vitrification System

10. The probability of a breach of the containment system associated with a vitrification process is low. Even if this accident were to occur, the contamination will still be contained in the molten glass, which is very viscous and the small amount that would be released by this bench-scale unit would harden and cool in a matter of minutes. Clean-up would be easy since the contamination would be in the glass and the glass would simply have to be removed. Reporting requirements as required under CERCLA would be done.

11. Although some radon emissions will occur from both the input material (contaminated soil and sludge) and the process itself, they will be at very low concentrations. The nominal off-gas flow rate is 1350 acfm (at 120°F) which yields a radon concentration of about 40 pCi/liter before any radon capture device. This maximum level is only ten times larger than the recommended 4 pCi/liter limit for air in US homes. The ^{222}Rn emission rate into the off-gas system is expected to be about 2.3 μCi/kg of glass produced. The high solubility of radon in water (a saturation concentration at 25°C which corresponds to an activity of about 3 x 10^5 Ci/liter) suggests that radon emissions will be greatly reduced by the off-gas system water scrubber unit.

12. Activities associated with the operation and maintenance of the bench-scale vitrification system will be performed in accordance with the work plan and FEMP procedures.

Sludge/Soil Retrieval and Delivery

13. The retrieval and delivery operations related to this activity will be performed under the auspices of the DOE/WEMCO industrial and radiological safety programs.

14. No major contaminates that can not be handled by vitrification (radiological or chemical, e.g., high organic loading) are anticipated to be found during the retrieval process.

15. Activities associated with the retrieval and delivery of sludge and soil to Plant 9 will be performed in accordance with the work plan and FEMP procedures.

Asbestos Removal

16. Asbestos removal/abatement will be required for any openings made in the outside walls of Plant 9. Work associated with the removal or treatment of asbestos will be performed in accordance with 40 CFR 61 and the appropriate DOE/WEMCO procedures regulating removal and dispositioning of asbestos.

Removal/Remedial Activities

17. The existing acid tank adjacent to the exterior of the south wall of Plant 9 will be removed using existing maintenance procedures for such activities so the MAWS process semi-trailers can be installed. This existing acid tank is empty and is not anticipated to be radioactively contaminated, according to information supplied by WEMCO. [L]

18. The existing pickler equipment located inside Plant 9 will be removed.

19. The abandoned furnace pit in the floor of Plant 9 will be filled with concrete.

Contamination Levels/Dose Rates

20. The does rates in the area of concern within Plant 9 range from 1 to 2.3 mrem/hr. [M]

21. In the area of Plant 9 where the demonstration project will be installed loose contamination levels range from 45 to 4472 dpm/100 cm^2 alpha and 104 to 10,015 dpm/100 cm^2 beta/gamma. The combined fixed and removable contamination levels on the floor range from 2000 to 50,000 dpm/100 cm^2. [M]

22. The contamination levels under the herculite are the same as those documented within the area in question. Please note: No contamination smears were taken underneath the herculite. The herculite is located over the pit, in the southeast corner of the work area, and along the southwestern wall. If contamination levels under the herculite are higher than assumed, decontamination will be performed during the preparation of Plant 9 for the MAWS processing equipment.

23. The fixed contamination levels in the bathrooms and break areas are in the same range as those for the Plant 9 work area. No loose contamination is in either the bathrooms or break areas according to information supplied by WEMCO. [L]

24. The contamination levels in the abandoned furnace pit are the same as those

documented within the area in question. The pit is radiologically contaminated with both fixed and loose contamination. [L] No contamination levels within the pit could be verified.

25. The existing pickler is radiologically contaminated, both loose and fixed. [M] The loose contamination levels range from 110 to 2032 dpm/100 cm^2 alpha and 210 to 7587 dpm/100 cm^2 beta/gamma. A direct frisk of the combined fixed and removable contamination ranged from 100,000 to 1,200,000 dpm/100 cm^2.

26. No survey data were available for the sump. However, building a ramp and bridge over the sump as part of the MAWS construction should not provide a mechanism for the spread of contamination.

Hazard Assessment

27. Plant 9 is included in a site SAR document currently being developed.

Fire Protection

28. The current principal use of Plant 9 is to store waste materials created at the FEMP in various types of 55-gallon drums. The drums are on wooden pallets and are stacked to a height of approximately 10 feet (three high). The inventory of the drum contents has been reviewed and nothing appears to present a fire hazard.

29. Plant 9 has some abandoned process equipment which contains liquids, the nature of which could not be determined. One was an oil bath and hazard labeled 1 (low hazard). Another piece of equipment was not labeled and seems to be some kind of wash bath that could raise the temperature on some of the dips and washes. The hazard for this "wash bath" is considered low based on comparing it to other equipment of this type.

30. About 14% of the Plant 9 building is protected by automatic sprinkler systems located in two separate areas. One area measures approximately 100 feet by 40 feet and is about half of the room being considered for the bench-scale vitrification process. (The feed mains for sprinklers in the remainder of the room exist, but the branch lines have either been removed or were never installed.) Additionally, a 50 feet by 50 feet area in the northeast area of the east section of the building has sprinklers.

31. The building is included in the site alarm system which monitors the sprinkler

water flow and provides smoke detection. There will be a fire wall to isolate the MAWS operational area from the rest of the building. A sprinkler system will be installed to cover 8000 square feet area in which the MAWS program will be housed. Additionally, a deluge system with a limited number of heads and the control valves located on the east wall protects the interior of one of the exhaust vents. The existing system provides limited fire protection for the building.

32. The nearest structures to the premise in question are more than 70 feet away. They are located across access roads to the south and west of Plant 9. Those buildings are "all" steel construction and do not present a hazard.

Based on the above 32 assumptions, the major preliminary safety requirements PARSONS has set for this scope of work are:

Industrial Safety

1. An eyewash and shower must be available in case personnel become contaminated.

Soil Cleaning Operation

2. The "clean" soil (<35 pCi/g dry weight) from the soil cleaning operation will be kept on site and stored as such or used as backfill for other construction activities. Contaminated soils awaiting soil washing will be stored in containers. Likewise, the contaminated washed soils will be stored in containers until fed to the melter.

Bench-Scale Vitrification System

3. If molten glass were poured into drums, a suitable drum would be chosen to withstand the heat. The drum would be isolated from other materials sensitive to heat until cool.

4. If a dry soil form is used as a "feed" for the process, then an enclosed system must be used.

Sludge/Soil Retrieval and Delivery

5. Non-RCRA soils will be used. TCLP analysis will be done on the soils used to verify the soils are non-RCRA.

Removal/Remedial Activities

6. The removal of the Plant 9 equipment will be performed according to existing DOE/WEMCO procedures for removing contaminated equipment. The existing acid tank adjacent to the exterior of the south wall of Plant 9 will be removed using existing maintenance procedures for such activities so the MAWS process semi-trailers can be installed.

Contamination Levels/Dose Rates

7. Periodic radiological surveys, in accordance with DOE Order 5480.11, will be performed in the work areas, bathrooms, and break areas frequently enough to detect an increase in the radiation levels. Dose rates associated with the bench-scale vitrification unit and the resin bed should be particularly noted. If any increase is detected, it will be immediately investigated by health physics and the necessary steps will be taken to correct the situation.

8. Periodic contamination surveys must be performed in the work areas, bathrooms, and break areas frequently enough to detect an increase in the radiation levels. If any increase is detected, it will be immediately investigated by health physics and the necessary steps will be taken to correct the situation. Please note that any loose contamination in the bathroom or break area constitutes an unacceptable condition which must be corrected immediately. The work area must be decontaminated as required by Health Physics.

Fire Protection

9. The sprinkler system in Plant 9 will be upgraded to meet the needs of the MAWS project.

10. Currently there are no interior fire walls in the building. To separate the proposed MAWS process area from the remaining storage areas, a new 2-hour fire-rated partition must be constructed according to DOE 6430.1A, Section 0110-6.3. This fire-rated partition would run the full height of the building and would provide an envelope to segregate the MAWS process area from the rest of the building. The old overhead doors, as well as those used by operating personnel, should be replaced with new fire-rated doors.

Exhaust Modification

11. The existing exhaust system needs to be modified as follows:

a) The ductwork to the dust collectors needs to be disconnected and decontaminated. Then the ductwork needs to be reconnected to the HEPA filter.
b) The existing exhaust fan needs to be upgraded.
c) A standby fan needs to be added.
d) The controls need to be reworked because they do not operate properly.

Storage

12. No combustible material should be stored within 5 feet of the operating vitrification unit.

13. Drums currently stored in Plant 9 will be removed from the MAWS work area.

Decontamination

14. The decontamination, transportation, and storage of the Plant 9 equipment must be performed according to applicable DOE/WEMCO procedures and ARARs as identified for response actions identified for OU 3.

15. The loose contamination in the Plant 9 work area may be coming from two possible sources. The source will be determined and the concerned surfaces painted to contain the contamination.

A SAR for the MAWS will be prepared independent of the Plant 9 SAR which is currently under development.

According to the exemption requests stated in the "Implementation Plan for Safety Analysis at the FEMP" [I], a project specific Safety Analysis Report (SAR) will not be required for this scope of work. Therefore, the safety documentation for the MAWS bench-scale demonstration should consist of a Safety Assessment (SA) which refers to the Site SAR currently being prepared. Please note that the requests for exemptions in the Implementation Plan do not include any requests to deviate from the design criteria imposed by DOE 6430.1A.

The SA will first consider the general safety requirements - such as industrial safety, contamination levels/dose rates, combustible storage, soil cleaning operations, vitrification operations, and sludge/soil retrieval and delivery. The SA will also consider specific requirements for Plant 9 such as removal/remedial activities, decontamination, and drum storage. Approval for the SA must be obtained from DOE prior to modifying the facility.

DELIVERABLES AND SCHEDULES

Deliverables

Table 4 shows a generic project checklist of the various USEPA, OEPA and DOE required deliverables. Those considered necessary (i.e., by regulation or procedure) for the MAWS Program bench-scale demonstration are noted in the table. Justification for pursuing (or not pursuing) the deliverable is given in the table. The last category of the list briefly describes the expected format of the document.

Table 4: MAWS Program Bench-Scale Demonstration Deliverables

DELIVERABLE REQUIRED:	Yes	No	JUSTIFICATION	IMPLEMENTATION STRATEGY
EPA Deliverables:				
OU 1 Treatability Study Work Plan (WP) - Bench Scale Vitrification (MAWS) with Permit Information Summary attachment	X		The Consent Agreement requires work plans for data used in support of the ROD.	Previous Work Plan submittals done in accordance with U.S. EPA Document No. EPA/540/2-89/058, "Guide for Conducting Treatability Studies Under CERCLA," Interim Final dated 1989.
Air Emission Permit to Install (PTI)		n/a	Not required under CERCLA which governs the MAWS program; however, the essence of the requirements will be met by the equivalent information provided in the information summary.	Information generally presented in a PTI will be given in the WP information summary.
Air Emission Permit to Operate (PTO)		n/a	Not required under CERCLA which governs the MAWS program; however, the essence of the requirements will be met by the equivalent information provided in the information summary.	Information generally presented in a PTO will be given in the WP information summary.

35
3514

DELIVERABLE REQUIRED:	Yes	No	JUSTIFICATION	IMPLEMENTATION STRATEGY
NESHAP		n/a	Not required under CERCLA per PEAPR dated 4/30/92; however, an explanation of how the applicable subparts H, Q, & M are met will be presented in the information summary.	Information describing how adherence to the FEMP's discharge limits will be monitored and maintained (in accordance with 40 CFR 61.96) and will be presented in the WP information summary.
NPDES Permit		X	The existing FEMP site-wide NPDES permit is adequate per PEAPR dated 4/30/92. Any water discharged from the MAWS wastewater treatment system will comply with the permit.	Information describing how adherence to the FEMP's discharge limits will be monitored and maintained and will be presented in the WP information summary.
Water Discharge Permit to Install (PTI)		n/a	Not required under CERCLA which governs the MAWS program. However, the essence of the requirements will be met by the equivalent information provided in the information summary.	Information describing how adherence to the FEMP's discharge limits will be maintained and monitored and will be presented in the WP information summary.

36
3514

DELIVERABLE REQUIRED:	Yes	No	JUSTIFICATION	IMPLEMENTATION STRATEGY
RCRA Research, Development, and Demonstration Permit		n/a	Although new facilities for treatment, storage, and disposal of hazardous wastes (such as pit 5) are required to be permitted pursuant of RCRA section 3005, CERCLA 121 negates this requirement.	The required information for a RCRA RD&D permit will be included as part of the information summary in the WP.
CERCLA DELIVERABLES NOT REQUIRING SUBMITTAL TO EPA:				
Removal Site Evaluation - MAWS Operation		n/a	The MAWS project is classified as a CERCLA/RCRA treatability demonstration which is part of the RI/FS process and does not need an RSE.	n/a
Removal Site Evaluation - MAWS Facility Preparation	X		An RSE is required for projects handling construction debris.	Existing FEMP RSE format.

37
3514

DELIVERABLE REQUIRED:	Yes	No	JUSTIFICATION	IMPLEMENTATION STRATEGY
RCRA Determination	X		Pit 5 constituents have been declared to be RCRA. Feed materials and residues will be characterized in accordance with the requirements of 40 CFR 262.11. Soils used will be non-RCRA; TCLP analyses will be performed to confirm this designation.	n/a
Quality Assurance Plan	X		Consent Agreement requires QAP$_j$P adherence if data is to be used in RI/FS.	QAP$_j$P
Engineering Evaluation/Cost Analysis		X	Generally required of removal actions or projects, but not research and development programs because this information is being developed for use in other projects.	n/a

3514
38

DELIVERABLE REQUIRED:	Yes	No	JUSTIFICATION	IMPLEMENTATION STRATEGY
DOE NEPA DELIVERABLES:				
Categorical Exclusion	X		A new 10 CFR 1021 ruling which provides CAT.EX categories that are applicable to MAWS was approved April 24, 1992 and became effective May 26, 1992. The categories deal with bench and small pilot facilities. See text in this document for more details.	
Environmental Assessment (EA)		X	This is not required since CAT. EX will apply to the MAWS.	n/a
Environmental Impact Statement (EIS)		X	This is not required since EA is not required.	n/a
Finding of No Significant Impact (FONSI)		X	This is not required since EA is not required.	n/a

39
3514

DELIVERABLE REQUIRED:	Yes	No	JUSTIFICATION	IMPLEMENTATION STRATEGY
DOE HEALTH AND SAFETY DELIVERABLES:				
Safety Analysis Safety Assessment (SA)	X		DOE Order 5481.1B, "Safety Analysis and Review System," requires that potential hazards be systematically identified; potential hazards analyzed; reasonable measures taken to eliminate, control or mitigate the hazards, including compliance with commitments made in NEPA documents; and there is documented management authorization of the DOE operation based upon an objective assessment of the Safety Analysis.	Safety Assessment will be prepared per SP-A-01-013. It is expected that no further documentation will be required based on preliminary evaluations enclosed in this document and the Preliminary Engineering Analysis done for the MAWS.

DELIVERABLE REQUIRED:	Yes	No	JUSTIFICATION	IMPLEMENTATION STRATEGY
Preliminary Safety Analysis Report (PSAR) Final Safety Analysis Report (FSAR)		X	DOE Order 5481.1B, "Safety Analysis and Review System," requires that potential hazards be systematically identified; potential hazards analyzed; reasonable measures taken to eliminate, control or mitigate the hazards, including compliance with commitments made in environmental assessments and impact statements; and there is documented management authorization of the DOE operation based upon an objective assessment of the Safety Analysis.	Safety Analysis will be prepared per SP-A-01-013. It is expected that no further documentation will be required based on preliminary evaluations enclosed in this document and the Preliminary Engineering Analysis done for the MAWS.
Risk Assessment (RA)	X		FEMP site procedures require a RA for every project. The QA level for the project is determined by the RA.	Risk Assessment and Management System Manual, SM-0001.
Health and Safety Plan	X		Health and safety plans are required for CERCLA related projects at FEMP.	Standard FEMP format that is consistent with OSHA requirements in 29 CFR 1910.120.

DELIVERABLE REQUIRED:	Yes	No	JUSTIFICATION	IMPLEMENTATION STRATEGY
OTHER FEMP RELATED DOCUMENTS				
• FEMP Work Permit • Confined Work Space Permit • Radiation Worker Survey Permit • Construction ES&H Work Survey (CESHWS) • Asbestos Work Permit	X		These are documents that are normally handled as routine with construction projects at FEMP and are therefore not separately listed.	FEMP procedures.
• Material Evaluation Form (MEF) • Construction Waste Identification (CWID)			These documents cover the characterization of the feed materials and residues per the requirements in the Consent Decree and RCRA regulations.	FEMP Procedure SSOP002.

Schedules

OU 1 remediation is a large project. For example, a 300 ton (about 250,000 kg) /24-hr day treatment facility will take ten years to remediate the pit wastes and 20% of the surrounding soils. Vitrification (or solidification) has not been demonstrated at large production rates. Attempting design of a process with little development is unwise and can lead to failure. Scale-up factors between five and twenty are reasonable. For OU 1, the following phased approach to development is required:

1 • Characterization and Laboratory Studies (in progress)
- Laboratory scale studies to determine the feasibility of vitrification.

2 • Bench-Scale Demonstration -- ½ to 1 ton/day (about 300 - 1000 kg)
Studies to develop the formulas for and provide design parameters for scale-up to a pilot unit. The MAWS bench-scale project fulfills this need.

3 • Pilot-Scale Demonstration -- 20 tons (about 18,000 kg) /day
Studies to determine large scale operability and economics and provide parameters for designing full-scale.

4 • Full-Scale -- 300 tons (about 250,000 kg) /day

The draft ROD for OU 1, per the Consent Agreement, is to be submitted to the EPA on December 6, 1994. Consequently, remedial construction, which must begin no later than 15 months after the approved ROD, should start in the later months of 1996. The pilot-scale facility, with a planned rate of approximately 20 tons (about 18,000 kg) /day, fulfills this time requirement until the full-scale facilities can be constructed. However, in order for the pilot-scale demonstration to begin within the 15-month timeframe, the regulatory documents and OU 1 Treatability Study Work Plan - Bench Scale Vitrification (MAWS) must be submitted and approved on time. Any delay in the approvals for the MAWS Program will put the remedial construction start date in jeopardy.

The regulatory review process will be enhanced by having briefings and workshops with the USEPA, OEPA (CERCLA and RCRA offices), and DOE regulators. These briefings will introduce concepts and regulatory documents prior to or with their submittal. Workshops will be used to resolve issues and document review comments. Figure 2 shows the proposed schedules for submitting and reviewing the anticipated documents.

Figure 2: Proposed Schedule for MAWS OU 1 Documents

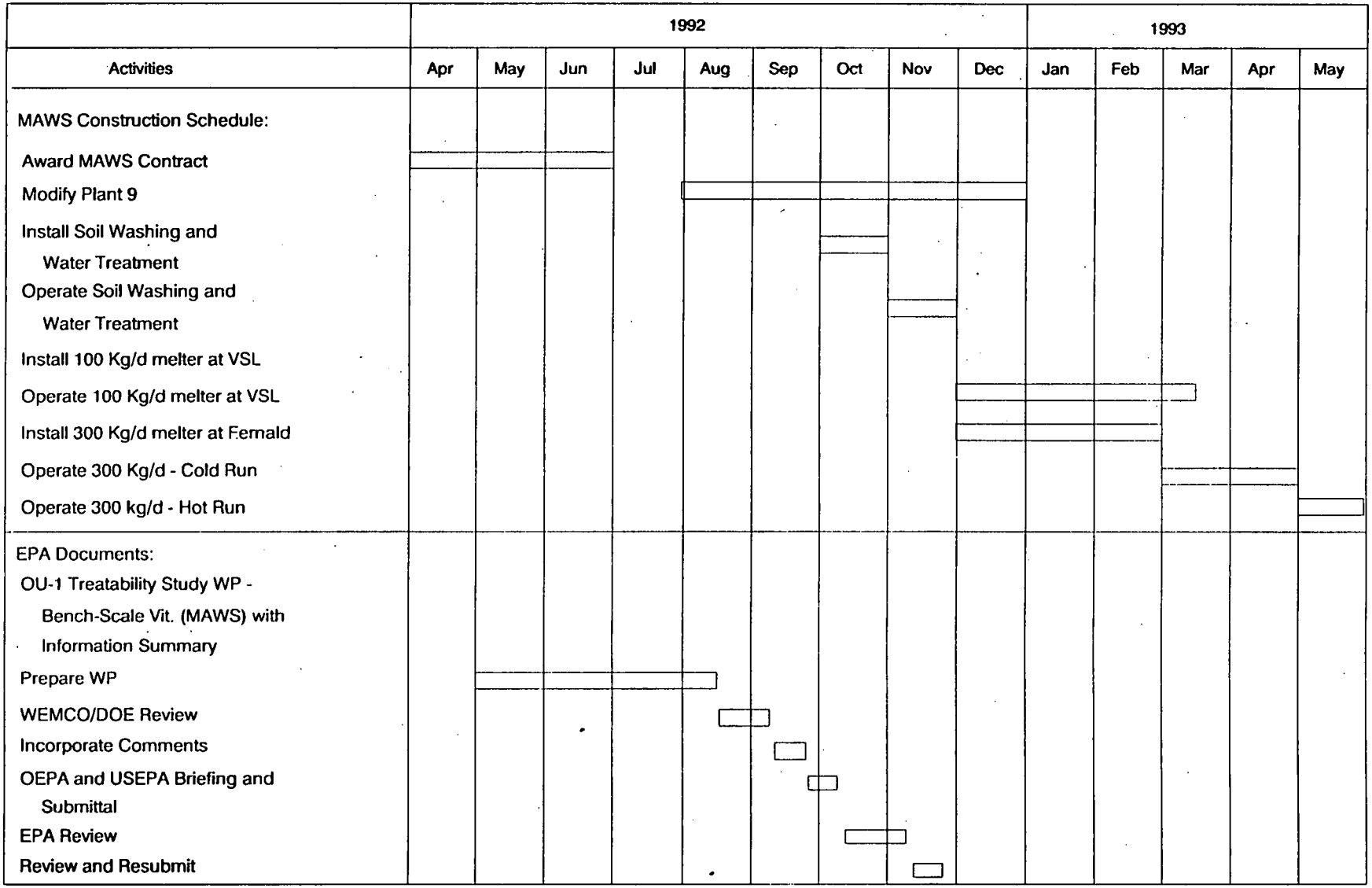

3514

45

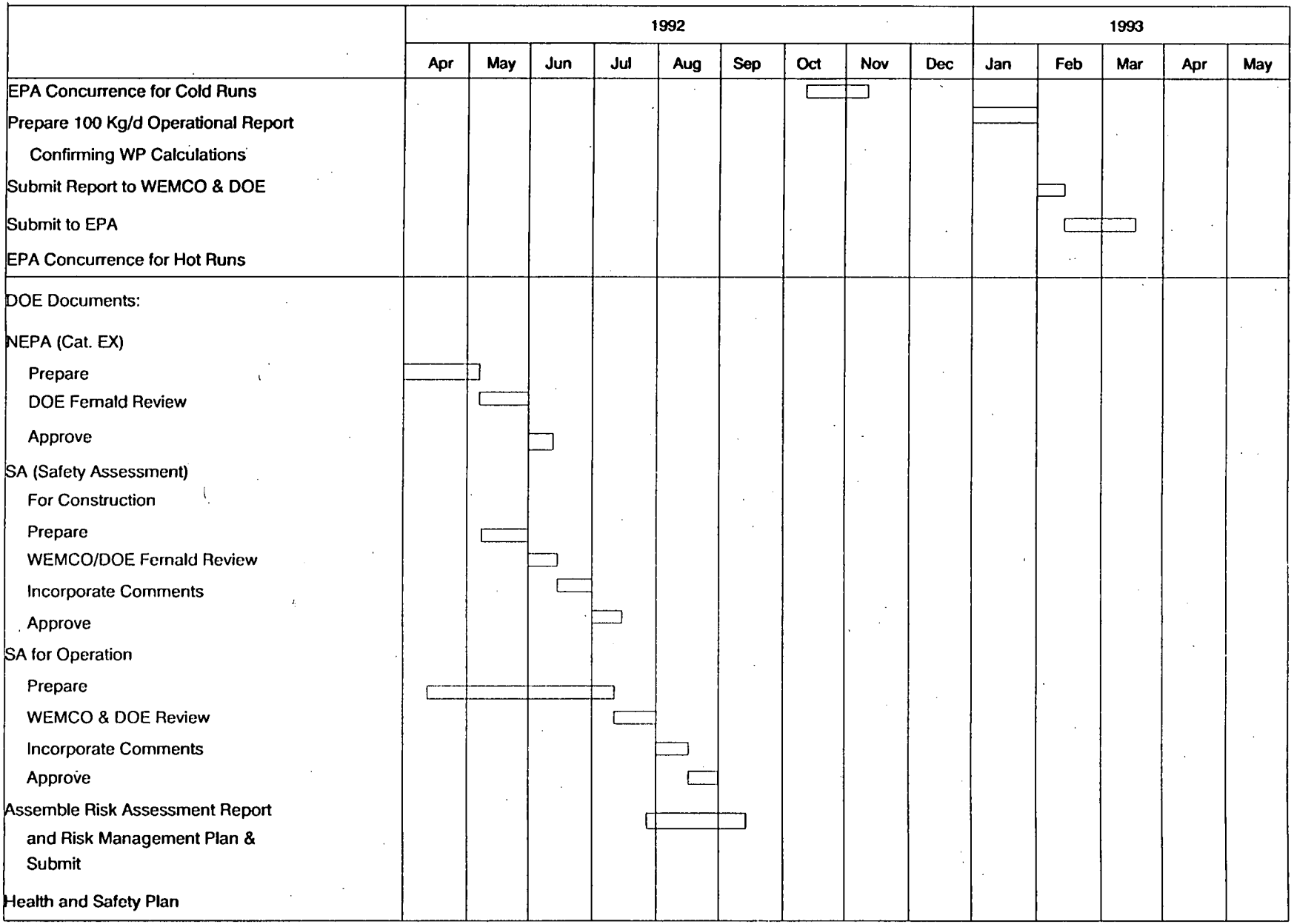
1992
1993
Apr
May
Jun
Jul
Aug
Sep
Oct
Nov
Dec
Jan
Feb
Mar
Apr
May
EPA Concurrence for Cold Runs
Prepare 100 Kg/d Operational Report
Confirming WP Calculations
Submit Report to WEMCO & DOE
Submit to EPA
EPA Concurrence for Hot Runs
DOE Documents:
NEPA (Cat. EX)
Prepare
DOE Fernald Review
Approve
SA (Safety Assessment)
For Construction
Prepare
WEMCO/DOE Fernald Review
Incorporate Comments
Approve
SA for Operation
Prepare
WEMCO & DOE Review
Incorporate Comments
Approve
Assemble Risk Assessment Report
and Risk Management Plan &
Submit
Health and Safety Plan

3514

46

	1992									1993				
	Apr	May	Jun	Jul	Aug	Sep	Oct	Nov	Dec	Jan	Feb	Mar	Apr	May
Operational Rediness Review:														
Identify Members														
Hold Review														
Issue Approval Report														

SUMMARY

In summary, the following is proposed in relation to the MAWS bench-scale demonstration project:

1. Establishing an interactive dialogue among DOE, OEPA, USEPA, and WEMCO.

2. Using briefings, presentations, and/or workshops to resolve both broad-based issues and concerns and to resolve comments on documents so that the approval process may be accelerated.

3. Using this Regulatory Compliance Plan as the background to begin the dialogue.

4. Using Table 4 as the list of documents/permits needed for the approval and operation of the MAWS bench-scale demonstration.

REFERENCES

A. "Proposal/Implementation Plan for a Minimum Additive Waste Stabilization (MAWS) Program for Technology Demonstration and Process Development". February 1992. FEMP.

B. Engineering Evaluation/Cost Analysis Waste Pit Area Storm Water Runoff Control. August 1990. U.S. DOE - ORO.

C. Safe Shutdown Decommissioning & Decontamination Plan. June 1990 Draft. U.S. DOE - ORO.

D. Feed Materials Production Center Annual Environmental Report for Calendar Year 1989. October 1990. U.S. DOE - ORO.

E. "Office of Technology Development Technical Task Plan, FEMP-OWV1, Minimum Additive Waste Stabilization (MAWS) Program". February 1992.

F. "Delisting Assessment Study for the Contents of Waste Pit 5 at FEMP". Draft dated February 1992.

G. U.S. Environmental Protection Agency, Petitions to Delist Hazardous Wastes; A Guidance Manual. Publication EPA/530-SW-85-003, NTIS Publication PB85-194488. April 1985.

H. RI/FS Treatability Work Plan for OU 1.

I. "Implementation Plan for Safety Analysis at the FEMP". WEMCO:P:92-244, March 16, 1992. H. Daugherty, WEMCO, to R. Tiller, DOE-FO.

J. "Preliminary Engineering Evaluation Minimum Additive Waste Stabilization (MAWS)". WMCO Subcontract No.2-21487, April 1992.

K. Soil Removal, Pit 5 Interim Remediation Report.

L. R.L. Cropper (PARSONS) to A.S. Rogers (WEMCO), April 1992. Record of Telephone Conversation.

M. Rogers, A.S. Radiological Survey Report, Plant 9. March 14, 1992.

N. General Design Criteria. DOE Order 6430.1A.

O. U.S. EPA Document No. EPA/540/2-89/058, "Guide for Conducting Treatability Studies Under CERCLA," Interim Final dated 1989.

P. Consent Agreement As Amended Under CERCLA Sections 120 and 106 (a), Administrative Docket Number: V-W-90-C-057.