U-003-303.2

3550

PRELIMINARY ENGINEERING EVALUATION MINIMUM ADDITIVES WASTE STABILIZATION (MAWS) APRIL 1992

DOCUMENT DATE 04-01-92

[redacted]

3550

3550

Preliminary Engineering Evaluation Minimum Additive Waste Stabilization (MAWS)

Environmental Remedial Action Project
Fernald Environmental Management Project
Fernald, Ohio

WEMCO Subcontract No. 2-21487
April 1992

Operable Unit 1, Project Order 33

PARSONS

Fairfield Executive Center
6120 South Gilmore Road
Fairfield, Ohio 45014

3550

Preliminary Engineering Evaluation Minimum Additive Waste Stabilization (MAWS)

Environmental Remedial Action Project
Fernald Environmental Management Project
Fernald, Ohio

WEMCO Subcontract No. 2-21487
April 1992

Operable Unit 1, Project Order 33

PARSONS

Fairfield Executive Center
6120 South Gilmore Road
Fairfield, Ohio 45014

2

Minimum Additive Waste Stabilization (MAWS) Preliminary Engineering Evaluation

3550

CONTENTS

SECTION

1.0 Introduction 1-1
- 1.1 Background 1-1
- 1.2 Objective 1-1

2.0 Evaluation Criteria and Assumptions 2-1
- 2.1 Evaluation Criteria 2-1
- 2.2 Significant Assumptions 2-2

3.0 Description of Alternatives 3-1
- 3.1 Plant 9 Upgrade 3-1
- 3.2 New Facility 3-5

4.0 Analysis of Alternatives 4-1
- 4.1 Safety Requirements 4-1
- 4.2 Project Costs 4-3
- 4.3 Schedule Impacts 4-6

5.0 Evaluation Summary and Recommendations 5-1
- 5.1 Evaluation Summary 5-1
- 5.2 Recommendations 5-2

6.0 References 6-1

ATTACHMENTS

1 Concept Sketches

2 Estimate Summary

LIST OF ACRONYMS

CERCLA	Comprehensive Environmental Response, Compensation, and Liability Act
CFC	Certified for Construction
CFR	Code of Federal Regulations
D&D	Decontamination and Demolition
DOE	Department of Energy
FEMP	Fernald Environmental Management Project
HEPA	High Efficiency Particulate Air Filter
MAWS	Minimum Additive Waste Stabilization
MTO	Material Takeoff
NEMA	National Electrical Manufacturer's Association
NFPA	National Fire Protection Association
NPH	Natural Phenomena Hazards
OEPA	Ohio Environmental Protection Agency
OSHA	Occupational Safety and Health Administration
OU	Operable Unit
RTC	Record of Telephone Conversation
RAWP	Removal Action Work Plan
RSE	Removal Site Evaluation
RWP	Radiation Work Permit
SA	Safety Assessment
SAR	Safety Analysis Report
SSOP	Site Standard Operating Procedure
UCRL	University of California Research Laboratory
UPS	Uninterruptible Power Supply
US EPA	United States Environmental Protection Agency
WEMCO	Westinghouse Environmental Management Company of Ohio

SECTION 1

INTRODUCTION

1.1 Background

The Minimum Additive Waste Stabilization (MAWS) project is proposed to consider vitrification for the Fernald Environmental Management Project (FEMP) as a potential treatment method for remedial actions of Operable Unit 1 (OU-1). Duratek/Catholic University of America, Washington D.C., will develop a bench scale vitrification system to investigate the feasibility of vitrification treatment for the OU-1 wastes. The MAWS system essentially consists of soil washing, water treatment, and waste material vitrification. The soil washing and water treatment systems will be mounted on semi-trailers provided by Duratek, and the vitrification melter will be floor-mounted. Initially the waste materials will come from Pit 5 and site soils. PARSONS will provide the design support for the MAWS project.

1.2 Objective

The objective of this report is to perform a preliminary engineering evaluation to determine a suitable location for the installation and operation of the MAWS system. This evaluation is a comparison of the alternatives of upgrading the existing Plant 9 building and constructing a new facility, in accordance with the criteria requested in Project Order 33, Rev. 1.

SECTION 2

EVALUATION CRITERIA AND ASSUMPTIONS

This section identifies the evaluation criteria that are employed in this evaluation, specifically, mandatory safety criteria and consideration of cost and schedule. Also presented in this section are the significant assumptions which form the basis for the evaluation.

2.1 Evaluation Criteria

2.1.1 Safety Requirements

According to the exemption requests in the "Implementation Plan for Safety Analysis at the FEMP" (WEMCO:P:92-244, March 16, 1992, H. Daugherty, WEMCO to R. Tiller, DOE-FO) a project specific Safety Analysis Report (SAR) will not be required. Therefore, the safety documentation for the MAWS program (i.e., the bench scale vitrification tests) should consist of a Safety Assessment (SA) that refers to the Site SAR that is currently being prepared as part of Project Order 53. The SA must be approved ← schedule ? prior to the start of facility modifications. This approach should be taken without regard to location of the MAWS system. However, the requests for exemptions in the Implementation Plan do not include any requests to deviate from the design criteria imposed by DOE 6430.1A, which must be followed for either alternative.

The evaluation of mandatory safety requirements will first consider the general requirements that would apply to both facility alternatives, such as industrial safety, contamination levels/dose rates, combustible storage, soil cleaning operations, vitrification operations, and sludge/soil retrieval and delivery. The safety evaluation will also consider Plant 9 specific requirements, such as removal/remedial activities, decontamination, and drum storage. i.e, Nitric tanks ?

2.1.2 Project Costs

The project cost evaluation will consider the primary factors affecting the design and construction costs associated with this project, as described for the architectural, civil/structural, fire protection, Heating, Ventilation, and Air Conditioning (HVAC), and electrical designs for each facility alternative.

The architectural evaluation will consider the requirements for separation between the new process area and the existing storage areas. Also to be considered is the need for sanitary facilities, and the egress and access requirements for the MAWS process area.

6

The civil/structural evaluation will consider the effect of natural phenomena loadings, such as wind and seismic loads, based on the hazard classifications of the respective structures. Also to be considered is the impact of new crane loads on the supporting roof-framing systems.

The fire protection evaluation will consider the construction, occupancy, and exposure factors affecting the analysis of existing or new fire safety systems.

The HVAC evaluation will consider the dust collection, filter, and ventilation requirements for the MAWS process area.

The electrical evaluation will consider the power system capacity to supply adequate electrical service to the building functions, as well as the MAWS process system.

2.1.3 Schedule Impacts

The schedule impact evaluation will consider the primary factors affecting the design and construction schedule for each facility alternative. These factors include design and construction durations and lead times associated with each alternative's requirements, as well as the time required for preparation and approval of CERCLA Removal Actions. Impact of SA approval?

2.2 Significant Assumptions

2.2.1 General Assumptions

The following assumptions have been made in preparing this preliminary evaluation regarding the general requirements for safety, building design, and the MAWS process.

Cost and Schedule

1) Preliminary direct cost estimates will be based on a rough Material Takeoff (MTO), a square foot basis, or a lump sum, depending on the appropriate estimating method for each major area to be evaluated.

2) Preliminary indirect cost estimates will be based on multipliers of direct cost, developed previously for similar projects orders.

3) The project schedule will be revised to provide sufficient Title I/II design time.

Heating, Ventilation, and Air Conditioning

1) All HVAC systems and components are non-safety class, per DOE 6430.1A criteria.

2) Steam is available for use in heating.

Electrical

1) The electrical services for the MAWS process facility will require approximately 450kVA (350kVA for the vitrification system and 100kVA for Heating, Ventilation, and Air Conditioning) service with a 350kVA standby generator (15kW, 3 phase and 30kW, 1 phase for vitrification and 100kW for Heating, Ventilation, and Air Conditioning) and 15 Kw, 480 volt, 3 phase, 15 minute UPS system.

2) The MAWS process facility lighting requirement will be 30-to 50-foot candles and 50-foot candles for the office/break room.

3) Fire Alarm, Evacuation System, Plant Paging, and telephones are required.

4) The Duratek MAWS system package will be supplied with all electrical hardware required between the various MAWS system components.

Industrial Safety

1) All construction work and MAWS system operation will be performed in accordance with OSHA regulations and the appropriate DOE/WEMCO procedures.

2) Appropriate operating procedures will be developed and followed for all equipment, electrical cables, etc, associated with the large quantities of electricity required to run the MAWS system.

Radiation Protection

1) All personnel will adhere to the requirements stipulated on the Radiation Work Permit (RWP) for this area and its associated activities.

Waste Water Cleaning Operation

1) The waste water will be purified by utilizing ion exchange resin. This operation will take place in the same area as the vitrification.

2) The dose rates associated with the waste water are inconsequential and would make no significant contribution to the general area dose rate.

3) The ion exchange resin and other filters related to this operation would be replaced at a frequency such that the dose rates associated with this material would be inconsequential and would make no significant contribution to the general area dose rate.

4) All activities associated with the operation and maintenance of the waste water cleaning operation, including disposal of the resins, will be performed in accordance with the appropriate and applicable DOE/WEMCO procedures.

5) The treated waste water will be sufficiently clean to be collected to the existing site sanitary sewer system. No new waste water collection sumps or drains will be required.

Soil Cleaning Operation

1) An adequate staging and storage area will be developed to handle both the inputs (contaminated) and the outputs (clean and contaminated) associated with this activity. This would include both the excess clean and contaminated soils.

2) Because the material that will be vitrified is primarily contaminated with uranium, with very low levels of other radionuclides, the dose rates associated with the contaminated soil utilized and generated by this operation would be inconsequential, and as such could make no significant contribution to the general area dose rate. Dose rates from the contaminated sludge in Pit 5 range from 0.17 to 2.38 mR/hr for mixed beta/gamma fields and from 0.068 to 0.58 mR/hr for gamma only (Study Number P120015).

3) All activities associated with the operation and maintenance of the soil cleaning operation will be performed in accordance with the appropriate procedures.

Bench Scale Vitrification System

1) According to our research, there has never been a breach of the containment system associated with a vitrification system. Therefore, the probability of this occurrence is low. Even if this accident were to occur, molten glass is very viscous and the small amount that would be released by this bench scale unit would harden and cool in a matter of minutes.

2) The feed into the bench scale vitrification system will be in a slurry form.

3) The output from the bench scale vitrification system will be in the form of glass marbles.

4) There will be some radon emissions from both the input material (contaminated soil and sludge) and the process itself, but the emissions themselves are at very low concentrations.

? → 5) The contaminated soil will supply all of the necessary additives for the bench scale vitrification process.

6) All activities associated with the operation and maintenance of the bench scale vitrification system will be performed in accordance with the appropriate procedures.

Sludge/Soil Retrieval and Delivery

1) The retrieval and delivery operations related to this activity will be performed under the auspices of the DOE/WEMCO industrial and radiological safety programs.

? → 2) No unexpected material types (radiological or chemical) are expected to be found during the retrieval process.

3) The containers of soil and sludge will be transported to the appropriate location on a flat bed truck.

4) All activities associated with the retrieval and delivery of sludge and soil will be performed in accordance with the appropriate procedures.

? → 5) Wastes used for the vitrification process will be weighed and labeled before being transported to the facility. Assaying of these wastes will not be performed.

2.2.2 Plant 9 Specific Assumptions

The following assumptions have been made in preparing this preliminary engineering evaluation regarding the specific requirements for upgrading Plant 9.

Cost and Schedule

1) Since the building modifications of Plant 9 will be integral with the existing structure, the cost estimate for upgrading Plant 9 is not to include the Decontamination and Decommissioning (D&D) requirements for the new construction. Only the D&D cost for the removal of any existing building components for installation of the MAWS system will be included.

Civil/Structural

1) The existing building structure has been properly maintained, such that there has been no significant structural deterioration that would adversely affect the structural integrity.

2) Some D&D will be required to prepare Plant 9 for construction activities and for the MAWS system operation.

Electrical

1) It is assumed that the existing Plant 9 substation has sufficient capacity to power the MAWS system.

Asbestos Removal

Is this going to impact schedule?
Do we need Asbestos work permit?

1) Asbestos removal will be required when openings are made in the outside walls. All work associated with the removal or treatment of asbestos will be performed in accordance with 40 CFR 61 and the appropriate DOE/WEMCO procedures.

Removal/Remedial Activities

1) The existing acid tank adjacent to the south wall of the building will be removed to provide access for installation of the MAWS process semi-trailers. The existing acid tank is empty and is not radiologically contaminated, according to the information supplied by WEMCO (ROTC, 4/9/92).

2) Removal of the existing acid tank would constitute a removal action under CERCLA.

3) The existing pickler equipment located inside of Plant 9 will be removed. The existing pickler is radiologically contaminated, according to information supplied by WEMCO (Plant 9 Survey, 4/10/92).

4) The abandoned furnace pit in the floor of Plant 9 will be filled with concrete. The pit is radiologically contaminated, according to information supplied by WEMCO (RTC, 4/8/92).

Contamination Levels/Dose Rates

1) The dose rates in the area of concern within Plant 9 range from 1 to 2.3 mrem/hr, according to information supplied by WEMCO (Plant 9 Survey, 3/14/92).

2) The loose contamination levels on the floor within the area of concern range from 45 to 4472 dpm/100cm^2 alpha and 104 to 10,015 dpm/100cm^2 beta/gamma, according to information supplied by WEMCO (Plant 9 Survey, 3/14/92). The combined fixed and removable contamination levels on the floor within the area of concern range from 2000 to 50,000 dpm/100cm^2, according to this same survey.

3) The contamination levels under the herculite are the same as those documented within the area in question. Please note that no contamination smears were taken underneath the herculite in the work area in question. The herculite is located over the pit, in the southeast corner of the work area, and along the southwestern wall.

4) The fixed contamination levels in the bathrooms and break area are in the same range as those for the work area in Plant 9. No loose contamination is in either the bathrooms or break area, according to information supplied by WEMCO (RTC, 4/8/92).

5) The contamination levels in the abandoned furnace pit are the same as those documented within the area in question. The pit is radiologically contaminated, both fixed and loose, according to information supplied by WEMCO (RTC, 4/8/92). No contamination levels within the pit could be verified.

6) The existing pickler is radiologically contaminated, both loose and fixed, according to information supplied by WEMCO (Plant 9 Survey, 4/10/92). The loose contamination levels range from 110 to 2032 dpm/100cm^2 alpha and 210 to 7587 dpm/100cm^2 beta/gamma. A direct frisk of the combined fixed and removable contamination ranged from 100,000 to 1,200,000 dpm.

7) The dose rates associated with the acid sump are inconsequential and would make no significant contribution to the general area dose rate. No survey data was available for this sump, though it is thought to be radiologically clean. The building of the ramp and bridge over the sump should not provide a mechanism for the spread of contamination.

<u>Bench Scale Vitrification System</u>

? or glass?

1) The probability of the molten gas destroying any of the drums or skids of material currently stored in Plant 9 is low.

2.2.3 New Facility Specific Assumptions

The following assumptions have been made in preparing this preliminary engineering evaluation regarding the specific requirements for constructing a new facility.

Cost and Schedule

1) Since the location of the new facility is unknown, the cost estimate is not to include the D&D requirements for the new building, the underground utilities to the new facility, or the possible relocation of existing underground utilities from the site selected for the new facility.

2) Since the location of the new facility is unknown, the schedule impact is not to include any possible design or construction delays while a siting study or decision is made.

Civil/Structural

1) A site is available for the new facility that would not adversely affect the siting design, such as providing site stormwater drainage or tie-ins to existing utilities and services.

SECTION 3

DESCRIPTION OF ALTERNATIVES

This section presents a description of the two alternatives considered in this evaluation, specifically, upgrading Plant 9 and building a new facility.

3.1 Plant 9 Upgrade

Plant 9 is classified as a Uranium Processing and Handling Facility per DOE 6430.1A, Section 1319. Even though the plant is shut down and was not originally designed to meet the criteria of DOE 6430.1A, any modifications of the plant must address the health hazards represented by all hazardous materials in enclosures, general work areas, and noncontaminated areas.

The existing Plant 9 facility is a steel framed building of approximately 46,000 square feet, currently being used for drum storage. The new MAWS process area would utilize an L-shaped area of approximately 4,200 square feet, located in the southeast corner of the building. The building is constructed of exterior and interior transite wall systems, corrugated cement asbestos roofing, and a concrete floor slab. The structural steel roof trusses span 100 feet, with 22 feet of head clearance. To accommodate the new MAWS process, the existing Plant 9 building would need to be upgraded with the following modifications and features. (See attached sketches SK-A-00563 and SK-S-00575.)

3.1.1 Architectural

An area of 100 feet by 80 feet in the southeast section of Plant 9 is separated by a partition of metal stud framing with a surface of corrugated transite. This partition does not qualify as a fire wall. To separate the new MAWS process area from the remaining storage areas, a new 2-hour fire-rated partition must be constructed according to DOE 6430.1A, Section 0110-6.3. The fire-rated partition would run the full height of the building and would provide an envelope for the MAWS process area from the rest of the building. New fire-rated overhead doors and man doors would also be provided.

The existing office, storage, and restroom facilities would be utilized. A 10-foot high partition would divide these existing rooms from the rest of the storage areas in the building.

An opening would be created in the exterior transite wall system for a door to allow the MAWS process trailers to be installed. Another opening would also be provided for removal of clean soil by a conveyor as a part of the MAWS soil washing process.

Floor slabs and walls would be epoxy coated for a positive seal.

3.1.2 Civil/Structural

New crane beams would be suspended from the existing roof trusses to support a new 5-ton bridge crane for maintenance of the bench scale vitrification melter. The existing roof trusses have been evaluated for the effect of supporting the new 5-ton crane. A preliminary analysis of the original roof design loads indicates that the roof trusses were designed to support the equivalent of a 3-ton crane, and that the net effect of a 5-ton crane would be a increase in truss member stresses. Therefore, it is probable that some modification of the roof trusses would be required. It must be noted that if a 2-ton crane is determined to be adequate for the MAWS system, then the existing trusses should be adequate with only minor modifications, if any.

The abandoned furnace pit would be filled with concrete up to the floor slab level in order to provide floor space for the new bench scale vitrification melter or other MAWS process equipment.

In order to provide access to the process area for the Duratek semi-trailers containing the soil washing and water treatment systems, a new opening would be provided in the existing south wall of the building.

The existing acid tank located within the containment sump on the south side of the building would also need to be removed to provide access for the semi-trailers. Since the existing water tank is currently being used, and will continue to be used indefinitely, as part of the perched water treatment for OU-3, the acid containment sump must remain in service. Therefore, a temporary steel bridge, with wood decking, would be provided to span across the sump, and an earth and concrete slab ramp would be provided to rise approximately 4 feet from grade level to floor level.

Other items that would need to be removed to make room for the MAWS system equipment include the existing pickler with its hood, ducting, and access platform.

The effects of natural phenomena hazards (NPH), specifically wind and seismic loads, have been estimated for the existing Plant 9 structure. The building was originally designed for a wind loading of 15 psf. There is no indication of any original seismic design. DOE Order 6430.1A requires that the design of new structures, or modifications to existing structures, must meet the current NPH criteria of UCRL-15910 in accordance with the facility hazard classification. Preliminary calculations indicate that current DOE 6430.1A and UCRL-15910 criteria for a Low Hazard facility would result in wind forces producing approximately twice the original wind load effects on the structure. Analysis of the existing structure for such a significant increase in design wind loading is beyond the scope of this evaluation, but would undoubtedly result in extensive modification and reinforcement of the structural framing. However, it is our conclusion that the more stringent DOE 6430.1A criteria should not apply to this facility because: (1) no change has occurred in the structure's hazard classification as a result of the MAWS production process, (2) no significant modifications would otherwise be required to the existing

structure, and (3) the short duration (±2 years) of the new operation is within the original design life of the structure.

3.1.3 Fire Protection

The present use of the building, i.e., storage of drums on wood pallets, presents the need for a full sprinkler system in the building (46,000 square feet) replacing the existing system that had been installed to protect hazards that are no longer present. Such a system would have to be installed to meet a hazard grading of ordinary hazard, Group III.

The building is essentially a metal framed building on a concrete slab, with the walls being of transite cement asbestos panels, and the roof being of cement asbestos construction. The building contains 46,000 square feet. The roof is sloped over 74 percent of the building with roof heights of 18 to 30 feet. The rear section of the west side of the building is flat roofed with 26 percent (14,000 square feet) of the total floor area. The building interior is without interior fire walls.

The principal use of the building is the storage of site-created waste materials of various types in 55-gallon drums. The drums are on wood pallets, stored to a height of approximately 10 feet. The inventory of the drum contents has been reviewed and none seems to present a fire hazard. With the pallets being stacked in a close array, the three levels of storage present a continuous combustible space over the area of storage. Three such levels exist in each pile. Additionally, the stored drums are in four separated areas of varying size, with the largest being in the north part of the east section of the building, and measures about 80 feet by 70 feet, or 5,600 square feet.

This plant has some abandoned process equipment that contain liquids, the nature of which could not be determined. One was an oil bath and hazard labeled as 1 (low hazard). Another piece of equipment was not labeled but seemed to be some kind of wash bath that apparently had the capability to raise the temperature on some of the dips or washes. The hazard is considered to be low, based on comparison with equipment of this type. Additionally, this plant has some temporary storage beneath an elevated air-filter bank in the room being considered for the MAWS process. The materials are ordinary combustibles, consisting of boxes of filters, belts, and packing. In an area approximately 50 feet by 50 feet in the northeast corner of the west section of the building, there appears to be a storage area for tools, personnel equipment, etc, and is of ordinary combustibility. Storage is no higher than 8 feet.

The building is protected by automatic sprinkler systems in two separated areas, protecting only about 14 percent of the building. The systems were apparently installed to address past specific hazards in those areas. One area measures approximately 100 feet by 40 feet and constitutes about half of the room being considered for the bench vitrification process. (The feed mains for sprinkling the remainder of the room exist, but the branch lines have either been removed or were never installed). Additionally, a 50-foot by 50-foot area is sprinkled in the northeast area of the east section of the building. The hazards

in this area include the dip tank mentioned above. This area of sprinklers extends over a corner of the drum storage in this section of the building. A static pressure of 122 psi was noted on the riser.

The building is included in the site alarm system which monitors the sprinkler water flow and provides smoke protection. Additionally, a deluge system of a limited number of heads, with the control valves on the east wall, protects the interior of one of the exhaust vents. With the elimination of processing in this building, the existing system provides limited fire protection for the building.

The nearest structures to the premises are in excess of 70 feet across access roads to the south and west. Those buildings are also of all steel construction, and do not present a hazard.

3.1.4 Heating, Ventilation, and Air Conditioning

The existing HVAC Dust Collector system consists of ductwork, cyclone separators, dust collectors, HEPA filters, exhaust fan, and stack with isokinetic sampling station. This system would be modified to suit the requirements of ventilating the 4,200-square foot enclosure. The unused portion of the system would be either abandoned in place or removed and decontaminated. The existing HVAC Supply Air system draws 100 percent outside air using steam for heating with no cooling provided. This system would be upgraded to satisfy and maintain the temperature requirements for the enclosure. A new off-gas exhaust system would be provided for the bench scale vitrification melter.

The existing exhaust system was primarily designed for dust collection on hoods of furnaces, cleaning stations, and crucible burnout areas. The exhaust air passes through cyclone separators and dust collectors before HEPA filtration drawn by a single exhaust fan discharging through a stack with an isokinetic sampler. The dust collectors and HEPAs are located on the mezzanine level and the exhaust fan on the first floor level. The system consists of four banks of HEPA filters of 6,000 cfm each, with a total capacity of 18,000 cfm, plus one bank as a standby.

Upgrading of the system components is required in order to utilize the existing exhaust system. Providing no cooling, the full capacity of 18,000 cfm has to be utilized, resulting in an inside room temperature of 108 degrees F. Since the resulting temperature would exceed the allowable inside temperature criteria, cooling is required reducing the air changes to be provided. A total exhaust of 8,000 cfm is adequate to satisfy the requirements considering energy conservation and less maintenance for HEPA changeout.

To modify the existing exhaust system, the ductwork to the dust collectors would be disconnected and decontaminated for new tapping to the HEPA filtration. The existing exhaust fan needs to be upgraded and a standby fan needs to be added to the system. The controls have operational problems and would need rework.

An air handling unit serving as make-up air is located at about 30-foot elevation with duct distribution into the areas. The system uses steam for heating. A cooling coil would be added to the unit with an air cooled condenser to be located outside on grade. The unit housing has been removed and needs to be upgraded. The ductwork would also be modified.

3.1.5 Electrical

The existing power system has adequate capacity and would be utilized to supply the electrical services for the MAWS system and associated HVAC equipment. An existing air circuit breaker and 3-inch conduit plus 1/C 250 kcmil, 600 volt, THWN cable is needed for the power feed.

A 350kVA standby generator in a NEMA 3R outdoor enclosure, 200 A, 600V auto-transfer switch with an NEMA 12 indoor enclosure, and 3-inch conduit plus 1/C 250 kcmil, THWN cable would be required.

A 15 kW, 480V, 3 phase, 15 min UPS in a NEMA 1 enclosure and a NEMA 3R battery enclosure with 1-inch conduit plus 1/C #8 THWN and 1/C #6 THWN cable would be required.

The existing lighting is adequate, as are the fire alarm, evacuation, plant paging, and telephone systems.

3.1.6 Environmental

A CERCLA Removal Action for removal of the acid tank would require the preparation and approval of two regulatory documents, specifically, a Removal Site Evaluation (RSE) and a Removal Action Work Plan (RAWP).

3.2 New Facility

If a new facility were built, it would be classified as a Laboratory Facility per DOE 6430.1A, Section 1325, and as such would have to meet the criteria in the appropriate -99 sections of the various divisions of DOE 6430.1A.

The new facility would consist of a pre-engineered building of approximately 4,000 square feet, with an eave height of 24 feet. The location of the new facility is unknown at this time. To accommodate the new MAWS system, the new facility would include the following features. (See attached sketches SK-A-00565 and SK-S-00576.)

3.2.1 Architectural

A pre-engineered metal building would be provided, with insulated metal roofing and side wall panels. The new building would provide adequate floor space without separations to provide room for the process area. All doors would be provided with the pre-engineered building. Within the building space, approximately 1,100 square feet would be needed for a break room, toilet room, and storage and mechanical room. All walls and floor slab should be epoxy- coated for a positive seal.

3.2.2 Civil/Structural

The new pre-engineered metal building would be a conventional rigid frame structure. The rigid frame structure would be designed for the effects of NPH, namely wind and seismic loads, in accordance with DOE Order 6430.1A and UCRL-15910 criteria for a Low Hazard facility. The design wind speed would be 80 mph, with an importance factor of 1.07.

The building frames would also be designed to support the 5-ton bridge crane, with a suspended load of approximately 15,000 lbs at 1/3 span points. The crane support loads would increase the size of the structural frame over a standard building shell. As with the Plant 9 alternative, the use of a 2-ton crane instead of a 5-ton crane would significantly reduce the effect of this loading on the structure.

The foundation for the new facility would be a conventional spread footing and grade beam foundation, with a concrete slab on grade designed to take light forklift traffic. Limited excavation and backfilling would be required to construct the foundation. Underground utilities and plumbing would also be required to provide for drinking water, fire water, and service water, as well as a sanitary sewer system for floor drains and restroom facilities. A concrete service apron would be required for traffic servicing the building.

3.2.3 Fire Protection

The facility would be an all metal pre-engineered type building, containing only the MAWS process equipment, with restrooms and storage facilities. To comply with WEMCO document RM-FMPC-0001, Section 0110-6.1 for providing approved automatic fire suppression, the building must be equipped with a wet pipe automatic sprinkler system that would comply with NFPA 13 standards for an Ordinary Hazard, Group II occupancy. No exposure is expected from adjacent buildings.

3.2.4 Heating, Ventilation, and Air Conditioning

A ventilation exhaust system for the 4,000-square foot enclosure would be provided, including duct distribution, HEPA filters, exhaust fans, and a stack with isokinetic sampling station. The system would be able to maintain the enclosure at a negative pressure relative to the outside atmosphere. Supply air system with 100 percent outside air would be provided, including heating and cooling coils to satisfy and maintain the temperature requirements for the enclosure. An off-gas exhaust system for the bench scale vitrification melter would be provided.

An HVAC system must be provided to the new facility. An exhaust system would draw air from the enclosure and pass through HEPA filtration before discharging to the atmosphere via a stack with isokinetic air sampler. A standby HEPA unit would be provided for filter changeout and a standby fan would be provided for continuous system operation in the event the fan needed service. A make-up air handler with heating and cooling coils would be provided. All HVAC equipment would be located in a mechanical room. The facility must be kept at negative pressure relative to the outside atmosphere.

3.2.5 Electrical

A local power system would be utilized to supply the electrical systems for the building and process requirements, as well as new fire alarm, evacuation, plant paging and telephone systems.

There would be a requirement for a power system with a 600 A, 600 V molded case circuit breaker, conduit, and cable to supply the electrical services for the MAWS process and associated HVAC equipment. Also required would be 3-inch conduit plus 1/C 250 kcmil, 600 volt, THWN cable for the power feed.

A 350kVA standby generator in a NEMA 3R outdoor enclosure, 200 A, 600V auto-transfer switch with an NEMA 12 indoor enclosure, and 3-inch conduit plus 1/C 250 kcmil, THWN cable would be required.

A 15 kW, 480V, 3 phase, 15 min UPS in a NEMA 1 enclosure and a NEMA 3R battery enclosure with 1-inch conduit plus 1/C #8 THWN and 1/C #6 THWN cable would be required.

New building lighting, as well as new fire alarm, evacuation, plant paging, and telephone systems would be required.

3.2.6 Environmental

For this preliminary evaluation, no environmental requirements have been identified for the new facility, since the location for the facility is unknown.

SECTION 4

ANALYSIS OF ALTERNATIVES

This section presents an analysis of the two facility location alternatives in regards to their safety requirements, project costs, and schedule impacts.

4.1 Safety Requirements

As described in Section 2.1.1, the safety documentation requirements for each alternative will be the same, i.e., a SA that refers to the site SAR.

4.1.1 General Requirements

Industrial Safety

An eyewash and shower must be available for contaminated personnel to use.

Contamination Levels/Dose Rates

A radiological survey must be performed in the work areas, bathrooms, and break areas at such a frequency as to detect an increase in the general area radiation levels. Special notice should be given to the dose rates associated with the bench scale vitrification unit and the resin bed. The detection of such an increase will be investigated by health physics, and the necessary steps taken to correct the situation.

A contamination survey must be performed in the work areas, bathrooms, and break areas at such a frequency as to detect an increase in the general area contamination levels. The detection of such an increase must be investigated by health physics, and the necessary steps taken to correct the situation. Please note that any loose contamination in the bathrooms or break area constitutes an unacceptable condition which must be corrected immediately. The work area must be decontaminated as required by health physics.

Storage

No combustible material may be stored within 5 feet of the operating vitrification unit.

Soil Cleaning Operation

The "clean" soil from the soil cleaning operation must meet both site and EPA criteria in order to be officially designated as clean. Soils involved in the soil cleaning operation must be aerated, as required. Contaminated soils, both input and feed, must be stored in containers.

Bench Scale Vitrification System

It is assumed that the output from the bench scale vitrification system will be in the form of glass marbles. The temperature of these output marbles must be limited such that there is no heat or melt hazard generated.

If a dry soil form is to be utilized as a feed for the bench scale vitrification system, the dry material must be added to the unit through the use of an enclosed system.

Sludge/Soil Retrieval and Delivery

Sludge and soil materials must be aerated as required during the removal and transport process.

4.1.2 Plant 9 Upgrade

Removal/Remedial Activities

The removal of the Plant 9 equipment must be performed in accordance with the applicable DOE/WEMCO procedures.

Decontamination

The decontamination, transportation, and storage of the Plant 9 equipment must be performed in accordance with the applicable DOE/WEMCO procedures.

The loose contamination in the Plant 9 work area could be generated from one of two sources, falling from the beams and ceiling or from leaching out of the concrete. Assuming the latter to be true, the work area floor must be painted to aid in fixing the contamination. This step would also aid in the generation of additional fixed contamination.

Storage

Drums currently stored in Plant 9 must not be located within 25 feet of the bench scale vitrification unit.

4.1.3 New Facility

No additional safety requirements have been identified specific to the new facility.

4.2 Project Costs

A project cost estimate was developed for this evaluation, based on the description of alternatives discussed in Section 3.0. The Estimate Summary for each of the two alternatives is presented in Attachment 2.

The total installed cost in each case was based on the direct cost, which is discussed in the following subsections, plus the indirect cost, which is a multiplier of the direct cost. The indirect cost includes such factors as job conditions, health physics, CERCLA, bonds, general contractor mark-ups, subcontractor mark-ups, construction management, project management (WEMCO), engineering title design, sales tax, escalation, and contingencies. A multiplier was used to estimate the indirect cost, based on actual cost estimates developed previously for similar project orders. This approach is reasonable for developing this preliminary estimate because of the time constraints and lack of detailed information.

4.2.1 Plant 9 Upgrade

The Plant 9 cost estimate is based on the description of the Plant 9 Upgrade alternative discussed in Section 3.1, and includes the direct costs identified in the following major areas:

Electrical

The electrical cost includes providing the electrical equipment required to supply power for the MAWS system and associated Heating, Ventilation, and Air Conditioning equipment. The estimate is based on a rough MTO.

The building lighting, fire alarm, evacuation, plant paging, and telephone systems are deemed to be adequate and are not included in this estimate.

Heating, Ventilation, and Air Conditioning

The HVAC cost includes upgrading the existing HVAC systems located within the building. The major features include the existing HEPA filters, ductwork, exhaust fans, and stack, as well as the existing supply air system. Also included is a new off-gas exhaust system. This estimate is based on a rough MTO.

Bridge Crane

The cost of the new 5-ton bridge crane includes the hoist, trolley, bridge, and controls. This estimate is a lump sum item, based on current industry data.

Building

The building cost includes the architectural and structural modifications required to install the MAWS system equipment and bridge crane. The major features include a new fire-rated partition, fire-rated doors, crane support beams, existing roof truss reinforcing, and an access ramp and bridge. This estimate is based on a rough MTO.

Sprinkler

The fire protection sprinkler system cost includes providing a completely new sprinkler system for the existing building. This cost is estimated on a square-foot basis.

Decon Area

The D&D cost includes the demolition of existing items that would interfere with the installation or operation of the MAWS system. These items include removal of abandoned platforms, asbestos wall panels, and the existing pickler and acid tank. This estimate is based on a rough MTO.

A CERCLA Removal Action for removal of the acid tank requires the preparation and approval of two regulatory documents, the RSE and the RAWP. The cost for preparation of these documents is not considered to be a significant factor in this evaluation.

4.2.2 New Facility

The new facility cost estimate is based on the description of the New Facility alternative discussed in Section 3.2, and includes the direct costs identified in the following major areas:

Electrical

The electrical cost includes providing the electrical equipment required to supply power for the MAWS system and associated Heating, Ventilation, and Air Conditioning equipment. The estimate is based on a rough MTO.

The building lighting, fire alarm, evacuation, plant paging, and telephone systems are included in the square-foot cost discussed below.

Heating, Ventilation, and Air Conditioning

The HVAC cost includes providing new HVAC systems for the building. The major features include new HEPA filters, ductwork, exhaust fans, and stack, as well as a new supply air system and off-gas exhaust system. This estimate is based on a rough MTO.

Bridge Crane

The cost of the new 5-ton bridge crane includes the hoist, trolley, bridge, and controls. This estimate is a lump sum item, based on current industry data.

Plumbing

The plumbing cost includes providing new supply and waste water plumbing systems for the building, such as drinking water, fire water, service water, as well as a sanitary sewer system for the floor drains and restrooms. This cost is estimated on a square-foot basis. The cost for these systems is limited to inside the building only, and all exterior underground utilities are not included.

Building

The building cost includes the architectural and structural requirements for erecting a new pre-engineered building. The frame dimensions are well within commercial metal building standards and therefore an economical building type. The crane support loads will increase the cost of the structural frame over a standard building shell. This portion of the estimate is a lump sum item, based on current industry data.

In addition to the building itself, the cost estimate includes the required foundation, floor slab, and crane support beams. This portion of the estimate is based on a rough MTO.

Sprinkler

The fire protection sprinkler system cost includes providing a new sprinkler system for the new building. This cost is estimated on a square-foot basis.

Square Foot

The square foot costs associated with the new building includes such features as interior partitions for the restrooms, offices, etc., as well as building services, such as lighting, fire alarm, evacuation, plant paging, and telephone systems.

4.3 Schedule Impacts

The significant impacts to the project schedule have been evaluated, based on the description of alternatives discussed in Section 3.0. Only the major schedule issues, such as safety, design, construction, and environmental regulatory approval are addressed in this evaluation.

4.3.1 Plant 9 Upgrade

The following schedule issues have been identified as having a significant impact on the project schedule for upgrading Plant 9, as discussed in Sections 2.1.1 and 3.1.

Safety

Since a SAR will not be required for Plant 9 under this project, no schedule problem is anticipated for preparing the SA.

Design

The engineering Title I/II design schedule must be extended about 2 months to provide sufficient time for preparation and review of the required deliverables. The current estimate of the design schedule for upgrading Plant 9 is about the same as for providing a new facility.

Construction

The upgrading of the existing Heating, Ventilation, and Air Conditioning system for Plant 9 includes two equipment items (exhaust fan and condensing unit for the air handler) which require at least six weeks for delivery from the time the purchase order is issued to a vendor. It is possible to issue the performance specifications for this equipment before the issue of the complete Certified for Construction (CFC) package, for timely delivery to support the construction schedule.

Providing the plant-wide sprinkler system to meet the fire protection requirement of Plant 9 could have an impact on the construction schedule.

No major schedule problems are foreseen at this stage in making the architectural, structural, or electrical modifications to Plant 9, as described herein.

Environmental

The schedule impact of the CERCLA Removal Action for removal of the acid tank would be approximately 5 months, based on an estimate of the preparation time and OEPA/US EPA review/response cycle time. There should be sufficient time within the construction schedule to accomplish this activity, providing that the design process can be started at the beginning of Title I/II Design for the CFC package. Nevertheless, WEMCO would be well advised to explore other alternatives for handling the tank removal, including moving the acid tank in a manner that would avoid introducing CERCLA Removal Action requirements.

4.3.2 New Facility

The following schedule issues have been identified as having a significant impact on the project schedule for providing a new facility, as discussed in Sections 2.1.1 and 3.2.

Safety

No safety impacts on the project schedule for a new facility have been identified.

Design

The engineering Title I/II design schedule must be extended about 2 months to provide sufficient time for preparation and review of the required deliverables. The current estimate of the design schedule for providing a new facility is about the same as for upgrading Plant 9.

Construction

No major schedule problems are foreseen in the procurement and erection of a pre-engineered metal building for the new facility, or in providing the required internal utilities and building services, as described herein. However, the selection of the new facility location could have an impact on site access, security, design and construction of underground utilities, and disposal of excavated soil. It is also probable that any site that would be selected would involve relocation of existing underground utilities.

Construction of the new facility would be governed by the provisions of Document No. SSOP-0044I. Compliance with this document would involve considerable time that could affect the schedule for design and construction of the new facility.

Environmental

No environmental regulatory impacts on the project schedule for a new facility have been identified.

SECTION 5

EVALUATION SUMMARY AND RECOMMENDATIONS

This section presents a summary of the evaluation of the two facility location alternatives in regards to their safety requirements, project costs, and schedule impacts. This section also presents PARSONS' recommendations for the selection of a facility location for the MAWS system.

5.1 Evaluation Summary

The two alternatives, Plant 9 Upgrade and New Facility, were evaluated based on mandatory safety criteria and consideration of cost and schedule.

Safety

There are no major safety concerns with either facility. Plant 9 is currently classified as a Low Hazard facility. Based upon this preliminary engineering evaluation, and taking into account the assumptions stated herein, it is our opinion that the addition of the MAWS system, including the bench scale vitrification unit, the soil cleaning system, and the waste water treatment system, would not increase the hazard classification of Plant 9.

It is also our opinion that a Low Hazard classification would be assigned to a new building constructed to house the MAWS system, including the bench scale vitrification system, the soil cleaning system, and the waste water treatment system, based upon this preliminary engineering evaluation, and taking into account the assumptions stated herein.

Cost

The total installed cost of upgrading Plant 9 for the MAWS system is about $140,000 higher than of building a new facility. However, the cost of D&D the new facility is not included in the cost comparison. Also not included are the costs associated with providing underground utilities to the new facility, security, site access, and the probability of relocating existing underground utilities from the site selected for the new facility. These unknowns could add up to a substantial additional cost for the new facility.

Schedule

The schedule issues associated with upgrading Plant 9 is the required extension of the engineering design schedule and construction of a plant-wide sprinkler system. Consideration must also be given to the time required for the CERCLA Removal Action of the acid tank. WEMCO can assess and determine if the Removal Action Work Plan (RAWP) needs to be undertaken. If such a work plan is deemed necessary, then the preparation, review, and approval process of the RAWP could still be accomplished within the construction schedule for the MAWS project, provided that the RAWP is initiated at the same time as the engineering Title I/II design.

The required extension of the engineering design schedule would also be a schedule problem for building the new facility. In addition, considerable delay in design and construction of the new facility could also result from the requirements for the site-selection process, compliance with Doc. No. SSOP-0044I, security, site access, and underground utilities. It is quite probable that the time required to construct the new facility would not support the schedule for the MAWS project.

5.2 Recommendations

Based on the preliminary engineering evaluation of the two alternatives, Plant 9 is recommended as the desired location for the MAWS system. The upgrading of Plant 9 appears to be the most cost effective of the two alternatives and will result in less project schedule impact than construction of a new facility.

SECTION 6

REFERENCES

(Project Order 33, Rev.1) *Minimum Additive Waste Stabilization (MAWS), Scope of Work.*

(DOE) United States Department of Energy Order 6430.1A. *General Design Criteria.*

(40 CFR 61) Code of Federal Regulations. *National Emission Standard for Radionuclide Emissions from DOE Facilities*, 40 CFR 61.

(UCRL-15910) *Design and Evaluation Guidelines for DOE Facilities Subjected to Natural Phenomena Hazards.*

(NFPA 13) National Fire Protection Association. *Installation of Sprinkler Systems*, NFPA.

(RM-FMPC-0001) *FMPC General Design Criteria Manual.*

(WEMCO, 1992) Westinghouse Environmental Management Company of Ohio, 1992. *Implementation Plan for Safety Analysis at the FEMP*, WEMCO:P:92-244.

(WEMCO) Westinghouse Environmental Management Company of Ohio. *Site Standard Operating Procedure: Controlling the Generation of Construction/Maintenance Waste*, WEMCO SSOP-044I.

(Study No. P120015) *Soil Removal, Pit 5 Interim Remediation Report.*

(Rogers, A.S., 1992) Rogers, A.S., March 1992. *Radiological Survey Report, Plant 9.*

(Elam, V.S., 1992) Elam, V.S., April 1992. *Radiological Survey Report, Plant 9.*

(RTC, 1992) R.L. Cropper (PARSONS) to A.S. Rogers (WEMCO), April 1992. *Record of Telephone Conversation.*

(RTC, 1992) R.L. Cropper (PARSONS) to A.S. Rogers (WEMCO), April 1992. *Record of Telephone Conversation.*

ATTACHMENT 1

CONCEPT SKETCHES

SK-A-00563	Plant 9 Upgrade - Architectural Requirement Notes
SK-A-00565	New Facility - Architectural Requirement Notes
SK-S-00575	Plant 9 Upgrade - Civil/Structural Requirements Notes
SK-S-00576	New Facility - Civil/Structural Requirement Notes

PO# 33 MINIMUM ADDITIVE WASTE STABILIZATION PLANT 9 – UPGRADE

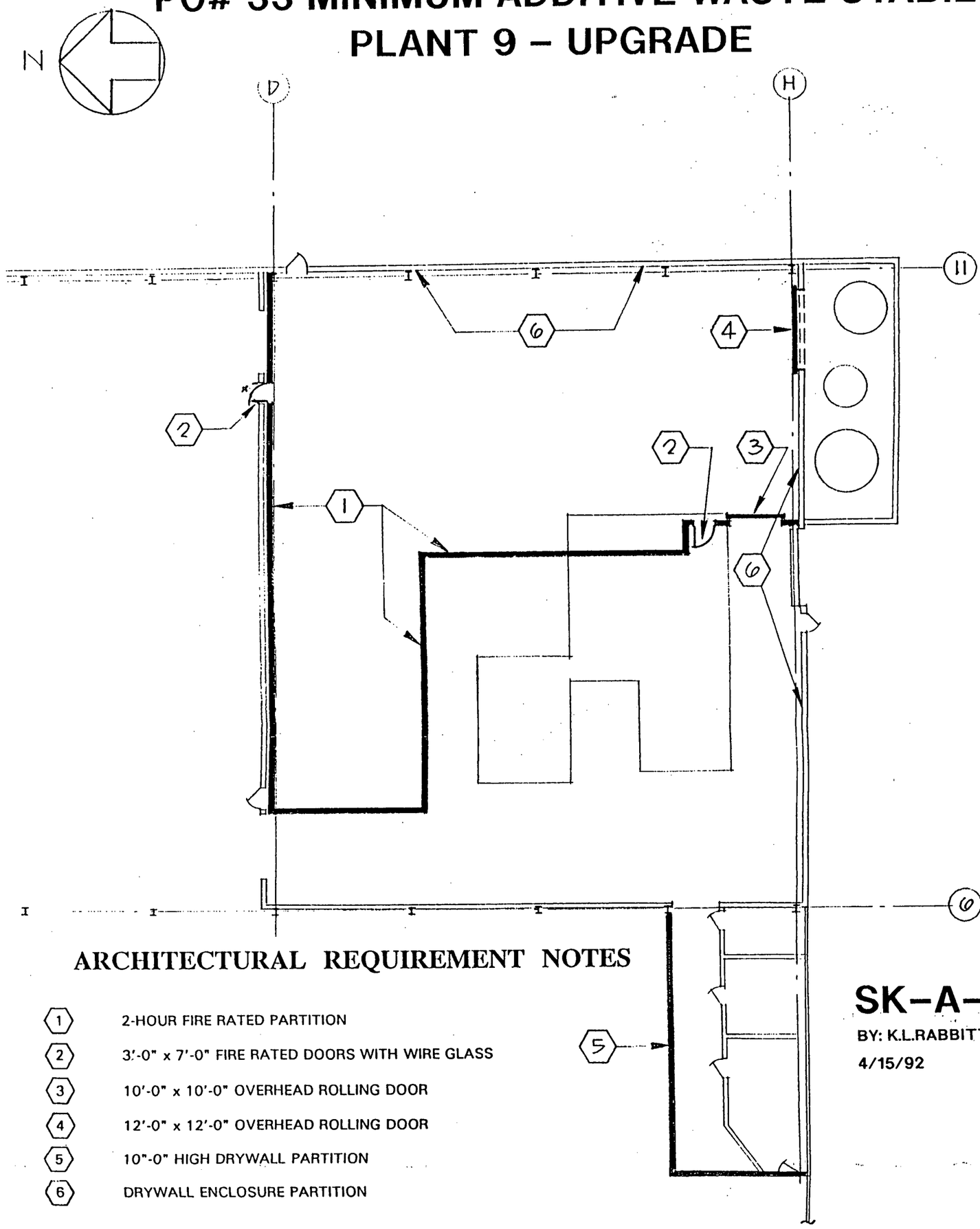

ARCHITECTURAL REQUIREMENT NOTES

1. 2-HOUR FIRE RATED PARTITION
2. 3'-0" x 7'-0" FIRE RATED DOORS WITH WIRE GLASS
3. 10'-0" x 10'-0" OVERHEAD ROLLING DOOR
4. 12'-0" x 12'-0" OVERHEAD ROLLING DOOR
5. 10"-0" HIGH DRYWALL PARTITION
6. DRYWALL ENCLOSURE PARTITION

SK-A-00563

BY: K.L.RABBITT

4/15/92

FLOOR PLAN

PARSONS ERA PROJECT

CALCULATION SHEET

REV	DATE	BY	CK	TITLE MIN. ADDITIVE WASTE STABILIZATION NEW FACILITY - FLOOR PLAN	PAGE NUMBER
					COST CENTER
				AUTHOR K.L. RABBITT SHEET 1 OF 1	OU 1 PO 33

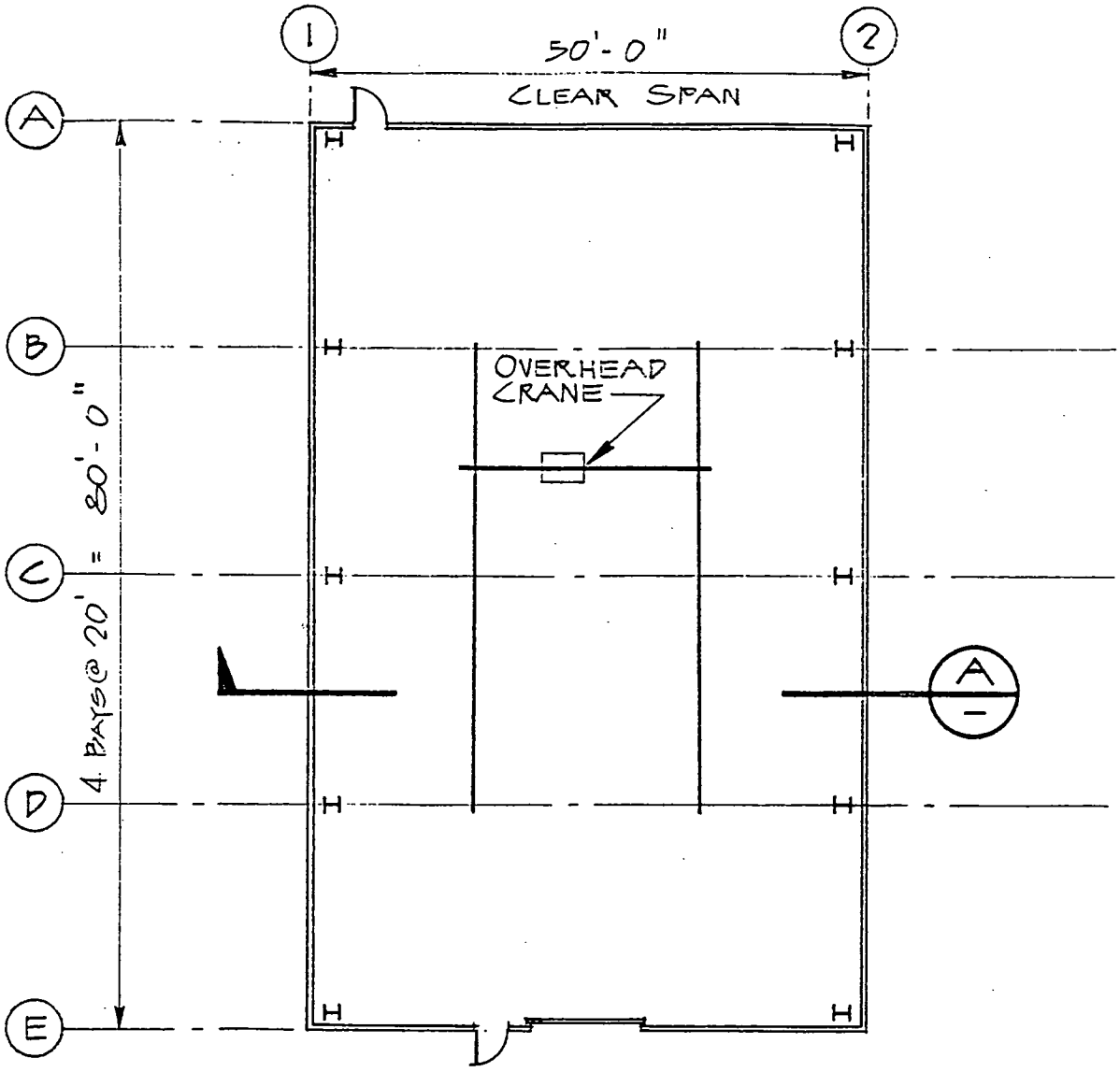

PLAN

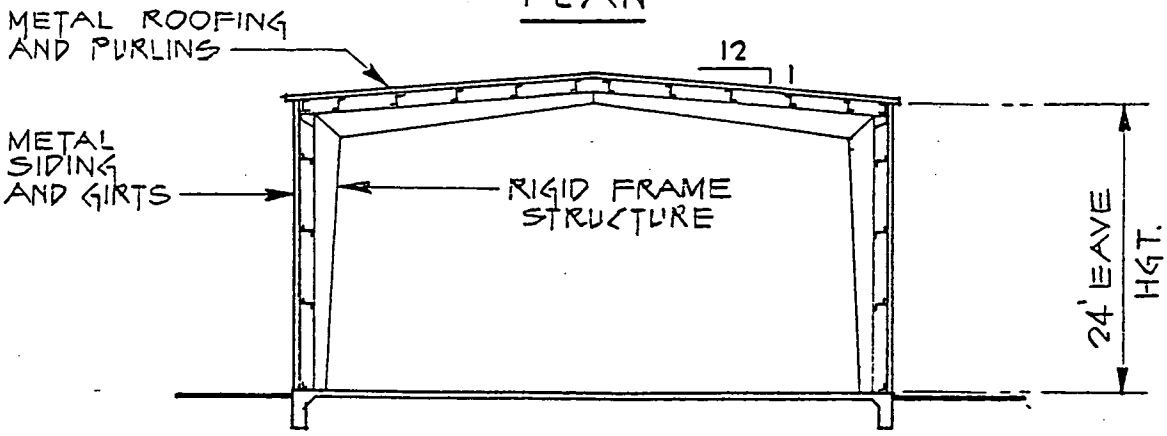

SECTION A

SK-A-00565

ENG.021(03/91)

P.O. #33 - (MAWS)
PLANT 9 UPGRADE

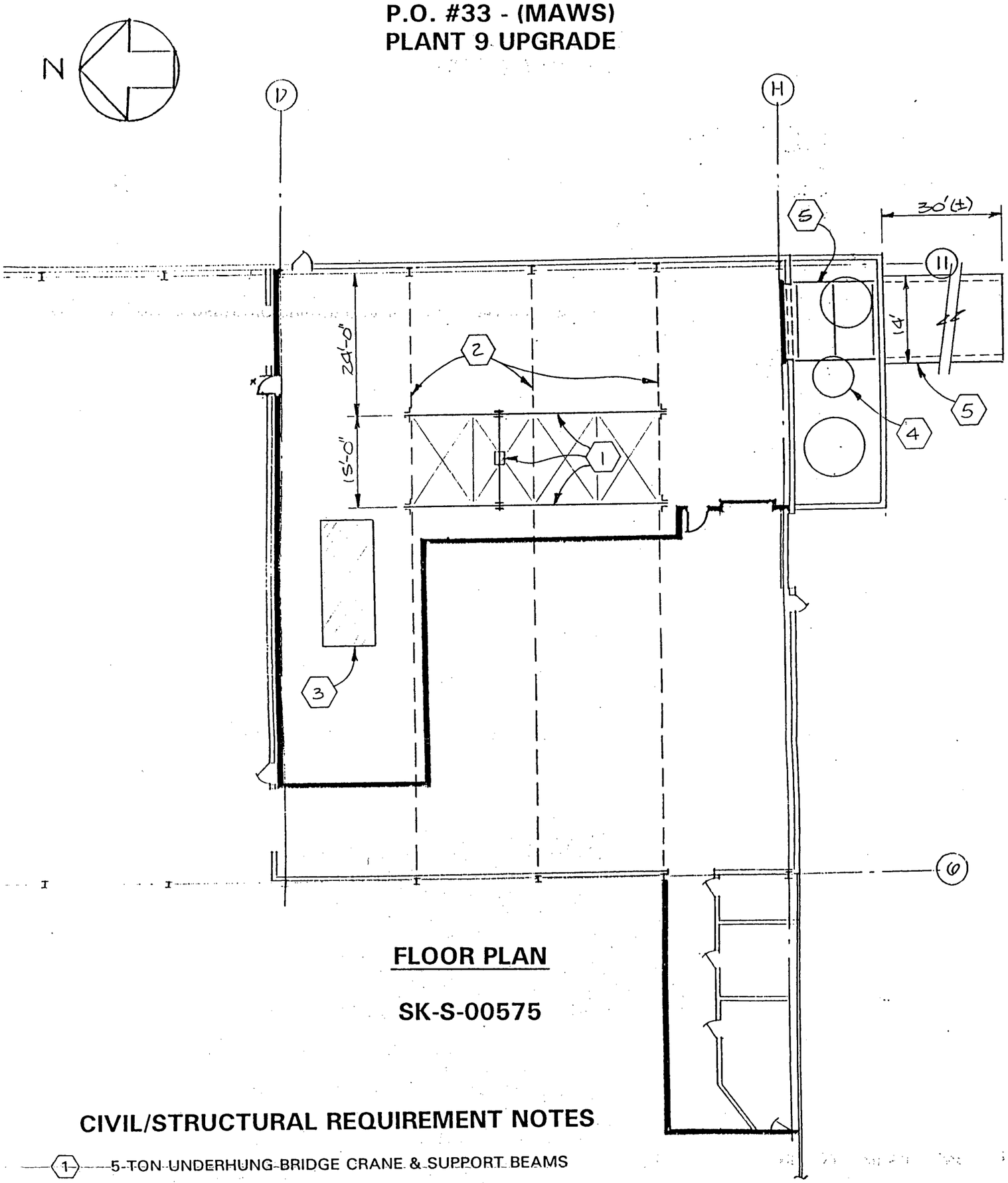

FLOOR PLAN

SK-S-00575

CIVIL/STRUCTURAL REQUIREMENT NOTES

1. 5-TON UNDERHUNG-BRIDGE CRANE & SUPPORT BEAMS
2. REINFORCE EXISTING TRUSSES (3 REQD)
3. INFILL EXISTING FURNACE PIT
4. REMOVE EXISTING ACID TANK & PICKLER
5. ACCESS RAMP & BRIDGE ACROSS SUMP

P.O. #33 - (MAWS)
NEW FACILITY

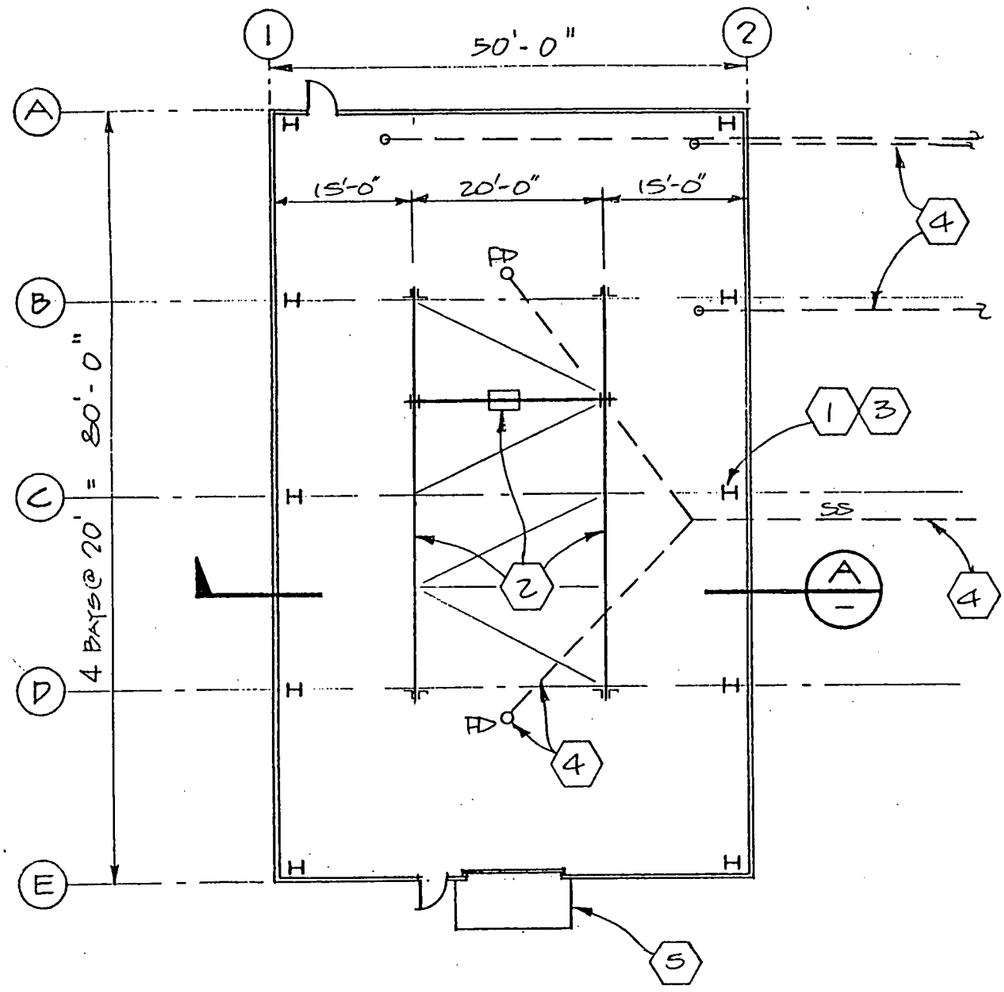

FLOOR PLAN

SK-S-00576

CIVIL/STRUCTURAL REQUIREMENT NOTES

1. PRE-ENGINEERED RIGID FRAME BUILDING
2. 5-TON UNDERHUNG BRIDGE CRANE & SUPPORT BEAMS
3. BUILDING FOUNDATION
4. BUILDING PLUMBING
5. ACCESS SERVICE APRON

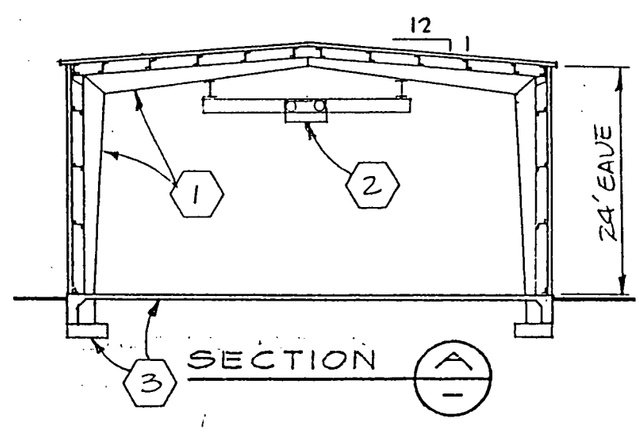

ATTACHMENT 2

ESTIMATE SUMMARY

ESTIMATE SUMMARY

PROJECT: Minimum Additive Waste Stabilization (MAWS)
Preliminary Engineering Evaluation – Plant 9 Upgrade
OU–1, PO–33

ESTIMATE NO.
SHEET NO. 1 of 2
PREPARED BY: Young DATE: 4/15/92
CHECKED BY: DATE:

MAIN ACCOUNT	DESCRIPTION	QUANTITY	MATERIALS UNIT PRICE	MATERIALS AMOUNT	LABOR UNIT M.H.	LABOR TOTAL M.H	LABOR RATE	LABOR AMOUNT	SUBCONTRACT UNIT PRICE	SUBCONTRACT AMOUNT	TOTAL
	Electrical			101,200				24,200			125,400
	HVAC			173,000				62,600			235,600
	Bridge Crane			50,200				3,800			54,000
	Building			71,900				67,900			139,800
	Sprinkler			27,600				64,400			92,000
	Decon Area			10,000				30,000			40,000
	Direct Cost			433,900				252,900			686,800
	* Indirect Cost			1,041,360				606,960			1,648,320
	Total Installed Cost			1,475,260				859,860			2,335,120
	* Indirect Cost: Include job condition factors, Health Physics, CERCLA, bonds, mark–ups for sub–contractor, GC and GC mark–up on subs, Con–struction Management, Project Management (WEMCO), Engineering (Title II & III), sales tax, escalation and contingencies.										

include work plan? Sub's time? include Decontam. the build. prior ~~to~~ mod.? PO33 included?

does this include PO33

Note: 1. D/D Cost of bench scale system after test runs are finished is not included.

ERAPS1\SYS:USER\FRD024\SSDATA\MINWASTE.WK3

39

3550

ESTIMATE SUMMARY

PROJECT: Minimum Additive Waste Stabilization (MAWS)
Preliminary Engineering Evaluation – New Facility
OU–1, PO–33

ESTIMATE NO.
SHEET NO. 2 of 2
PREPARED BY: Young DATE: 4/15/92
CHECKED BY: DATE:

MAIN ACCOUNT	DESCRIPTION	QUANTITY	MATERIALS UNIT PRICE	MATERIALS AMOUNT	LABOR UNIT M.H.	LABOR TOTAL M.H	LABOR RATE	LABOR AMOUNT	SUBCONTRACT UNIT PRICE	SUBCONTRACT AMOUNT	TOTAL
	Electrical			98,700				21,800			120,500
	HVAC			223,400				47,300			270,700
	Bridge Crane			50,200				3,800			54,000
	Plumbing			3,900				9,600			13,500
	Building			94,500				51,600			146,100
	Sprinkler			4,000				9,000			13,000
	Sq. Ft. (Lighting, etc.)			13,000				14,600			27,600
	Direct Cost			487,700				157,700			645,400
	* Indirect Cost			1,170,480				378,480			1,548,960
	Total Installed Cost			1,658,180				536,180			2,194,360

* Indirect Cost:
Include job condition factors, Health Physics, CERCLA, bonds, mark–ups for sub–contractor, GC and GC mark–up on subs, Con–struction Management, Project Management (WEMCO), Engineering (Title II & III), sales tax, escalation and contingencies.

Note: 1. D/D cost not included
2. Underground utility to new facility not included

ERAPS1\SYS:USER\PRD140SS DATA\MINWASTE.WK3

40

355