R-009-204.27

3826

SOUTH GROUNDWATER CONTAMINATION PLUME REMOVAL ACTION PART 2 - PUMPING AND DISCHARGE SYSTEM AND PART 3 - INTERIM ADVANCED WASTEWATER TREATMENT SYSTEM WORK PLAN

10/01/92

DOE-FN/EPA
35
WORK PLAN
OU5

[redacted]

3826

SOUTH GROUNDWATER CONTAMINATION PLUME REMOVAL ACTION

PART 2 - PUMPING AND DISCHARGE SYSTEM

AND

PART 3 - INTERIM ADVANCED WASTEWATER TREATMENT SYSTEM

WORK PLAN

FERNALD ENVIRONMENTAL MANAGEMENT PROJECT

Revision 2 - October 1992

Prepared by:

Westinghouse Environmental Management Company of Ohio
Cincinnati, Ohio

For:

The United States Department of Energy
Fernald Site Office

TABLE OF CONTENTS

1.0 INTRODUCTION 1

2.0 BACKGROUND 2
- 2.1 Summary of the Potential Threat 2
- 2.2 Removal Action 3
- 2.3 Related Actions 6
- 2.4 Integration with the Final Remedial Action . 8
- 2.5 Roles of the Participants 9

3.0 SUPPORT ACTIVITIES 10
- 3.1 Project Planning Activities 10
- 3.2 Additional Data 15
- 3.3 Training Requirements 16
- 3.4 Access to Private Property 16

4.0 FIELD ACTIVITIES 16

5.0 SAMPLING AND ANALYSIS PLAN 17
- 5.1 Groundwater 17
- 5.2 Wastewater 17
- 5.3 Soil and Rubble 18

6.0 HEALTH AND SAFETY PLAN 18

7.0 PERMIT INFORMATION SUMMARY 19

8.0 QUALITY ASSURANCE 19

FIGURES

Figure 1 Location Map
Figure 2 Site Map
Figure 3 South Groundwater Contamination Plume Area Location Plan - CFC Drawing
Figure 4 Proposed Interim Wastewater Flow Diagram (Overview)
Figure 5 IAWWT (SWRB) Treatment Unit Process Flow Diagram
Figure 6 1989 Uranium Concentration for the Storm Sewer Lift Station and Stormwater Retention Basin
Figure 7 IAWWT (BDN-ETS) Treatment Unit Process Flow Diagram

TABLES

Table 1 NPDES Monitoring Parameters
Table 2 FFCA Monitoring and PRRS Parameters

ATTACHMENTS

I Soil and Rubble Sampling and Analysis Plan
I-1 Categories of Analytical Constituents
II Permit Information Summary

1.0 INTRODUCTION

Operable Unit 5 - Environmental Media, of the Fernald Environmental Management Project (FEMP) Remedial Investigation/Feasibility Study (RI/FS), includes those environmental media that serve as migration pathways and/or environmental receptors of radiological or chemical releases from the FEMP. Figure 1 shows the location of the FEMP and its surroundings. FEMP RI/FS findings have determined that a uranium contamination plume exists in the underlying area south of the FEMP property. Because of the associated potential threat to human health and the environment, the Department of Energy (DOE) is planning a Removal Action to address the plume. The plume is referred to as the South Groundwater Contamination Plume, or simply the "South Plume". The Removal Action is being conducted in a manner consistent with the implementation of the final Remedial Action for Operable Unit 5.

In accordance with 40 CFR 300.415, an Engineering Evaluation/Cost Analysis (EE/CA) dated November 1990, was prepared to evaluate Removal Action alternatives using available data to support the selection of a preferred alternative. The EE/CA was subsequently approved by the United States Environmental Protection Agency (U.S. EPA) and the Ohio Environmental Protection Agency (Ohio EPA). The National Environmental Policy Act (NEPA) of 1969 requires federal agencies to include appropriate and careful consideration of all environmental effects of proposed actions in their decision making process. The EE/CA has been prepared for the purpose of integrating the requirements of both the Comprehensive Environmental Response, Compensation, and Liability Act of 1980 (CERCLA) and NEPA, and was used by the U.S. EPA and the DOE as the basis for remedy selection and implementation.

As the result of information obtained after the approval of the EE/CA from a separate RI/FS being performed at the Paddy's Run Road Site (PRRS), additional concerns have been identified and are being addressed in the South Plume area. The PRRS consists of several industries that in past years have reportedly released both inorganic and organic chemical compounds into the environment, which are now being found in the underlying groundwater. The presence of these compounds have impacted the implementation of the Removal Action's preferred alternative. Consequently, after several meetings with U.S. EPA and Ohio EPA, the DOE has issued an Explanation of Significant Differences (ESD) report as an addendum to the EE/CA on December 17, 1991, which presents modifications to the preferred alternative.

The 1990 Consent Agreement as amended in 1991, under CERCLA Sections 120 and 106(a), hereafter referred to as the Consent Agreement, requires a work plan be submitted for the implementation of the preferred alternative for Removal Number 3, the South Groundwater Contamination Plume Removal Action. With the issuance of the ESD, the preferred alternative for the Removal Action has been divided into five parts :

Part 1 - Alternate Water Supply
Part 2 - Pumping and Discharge System

Part 3 - Interim Advanced Wastewater Treatment System
Part 4 - Groundwater Monitoring and Institutional Controls
Part 5 - Groundwater Modeling and Geochemical Investigation

This Removal Action work plan addresses the implementation of Part 2, the action involving the pumping and discharge of the South Groundwater Contamination Plume and Part 3, the installation of an Interim Advanced Wastewater Treatment (IAWWT) system capability to the existing FEMP wastewater treatment system. The IAWWT system is an action which involves the treatment of a portion of the existing FEMP wastewater discharge to remove a mass of uranium which exceeds the mass that will be added to the FEMP wastewater discharge as result of implementation of Part 2 of this Removal Action, as well as from the implementation of other Removal Actions. As agreed upon by the DOE and the U.S. EPA, the total mass of uranium in the FEMP wastewater discharge to the Great Miami River is not to exceed 1700 pounds per year, including extracted South Plume groundwater.

~~The work plan for Part 1 of the Removal Action was prepared as a separate document and was approved by the U.S. EPA and conditionally approved by the Ohio EPA pending response to its comments dated January 8, 1991. Revisions to the Part 1 work plan and responses to Ohio EPA comments were submitted to both EPA's on December 31, 1991. Part 4 of the Removal Action is being implemented through the existing FEMP groundwater monitoring program. The work plan for Part 5 of the Removal Action was also prepared as a separate document and has been conditionally approved by the U.S. EPA and Ohio EPA. Response to comments on Part 5 are presently being issued.~~

A Removal Site Evaluation (RSE) has been generated and approved by the DOE consistent with the requirements of the 40 CFR 300.410, the National Oil and Hazardous Substances Pollution Contingency Plan (NCP). All activities performed under this work plan will be in accordance with the NCP and the OSWER Directive 9360.0-03B, SUPERFUND REMOVAL PROCEDURES, Rev. 3. The Removal Action also provides for compliance with the requirements of 29 CFR 1910.120.

2.0 BACKGROUND

2.1 Summary of the Potential Threat

Stormwater run-off from most of the FEMP property (with the exception of much of the former Production Area and the Waste Pit Area) drains to Paddy's Run, a tributary to the Great Miami River, see Figure 2. Prior to October 1986, this drainage included run-off from the former FEMP Production Area. Paddy's Run has been identified as a major route of surface water leakage into the Great Miami Aquifer. Uranium contamination in this drainage area is therefore transported with the stormwater run-off to the aquifer via Paddy's Run. Once entering the aquifer, the contaminated water flows along the natural groundwater gradient to the south which forms the pathway for the South Plume.

FEMP RI/FS analytical data indicates the presence of radionuclides, organic compounds, and inorganic constituents in the South Plume. Uranium concentrations have been detected in excess of the 30 μg/L (micrograms/liter) concentration based action level established for uranium in the South Plume Removal Action EE/CA. Other radionuclides have been found at background concentrations. None of the inorganic constituents that have been detected are above established drinking water standards and organic compounds observed are neither consistently detected nor above allowable maximum concentration levels when detected in the area where groundwater is planned to be extracted up-gradient from the PRRS. Therefore, uranium has been identified as the compound of concern.

However, as the result of past industrial activities south of the FEMP, the potentially responsible parties (PRPs) of the PRRS: Albright & Wilson Americas Inc. (AWA), Ruetgers-Nease Chemical Co., Inc., and Mobil Mining and Minerals Co., have entered into an Administrative Consent Order with the State of Ohio to perform a separate RI/FS. Recent remedial investigation soil boring samples at the PRRS have shown high concentrations of various organic and inorganic compounds in addition to above background concentrations of the radioactive isotope potassium-40. During the PRRS RI/FS field activities, the underlying groundwater has been determined to be contaminated with inorganic and organic chemical compounds resulting in an inorganic contamination plume and an organic contamination plume in the South Plume area. As described in the ESD and herein, these PRRS plumes are located down-gradient from the area where groundwater will be extracted during Part 2 operations.

The only known users of South Plume groundwater containing a level of uranium above the concentration based action level adopted for the Removal Action are two industries (Delta Steel and AWA) located along Paddy's Run Road, see Figure 3. Potential future receptors of the South Plume groundwater, as identified in the EE/CA, include persons who install new wells within the plume for potable use, crop irrigation, or livestock feeding; persons pumping groundwater for potable use, crop irrigation, or livestock feeding from an area located along the future migration pathway of the plume; and persons using surface waters into which contaminated groundwater has been discharged.

2.2 Removal Action

The preferred alternative, identified in the EE/CA, and agreed upon by U.S. EPA and the DOE through Dispute Resolution under the Consent Agreement and as amended by the ESD, includes: an alternate water supply to the two currently affected industrial users (Part 1), groundwater pumping from the South Plume with direct discharge to the Great Miami River (Part 2), installation of the IAWWT system to provide a greater than equivalent mass removal of uranium from the existing FEMP effluent discharge in order to maintain a total uranium discharge from the FEMP of less than 1700 pounds per year

(Part 3), groundwater monitoring and institutional controls (Part 4), and groundwater modeling and geochemical investigations (Part 5). Part 5 was added to the Removal Action along with the relocation of the Part 2 recovery well field by the ESD to the EE/CA. Subsequent to the agreement for Part 1, the public water supply became a viable alternative to the well field for Delta Steel. It was then proposed to the U.S. EPA that Delta Steel be deleted from Part 1 of the removal action, and instead be connected to the public water supply when it becomes available.

Computer groundwater modeling and continuing PRRS RI/FS field work indicated that the location of the recovery well field described in the November 1990 EE/CA (just north of New Haven Road and west of State Route 128) could not intercept the leading edge of the South Plume, as defined by the 30 ug/l uranium concentration based action level, without adversely affecting the PRRS plumes. The DOE, U.S. EPA, and Ohio EPA concurred that the recovery well field would therefore need to be relocated to an area up-gradient from the PRRS plumes, i.e. north. As a result, the relocation of the recovery well field has been determined to be north of AWA. Consequently, modeling and existing monitoring well information has therefore predicted that the IAWWT system must increase its treatment capacity to ensure that the 1700 pounds of uranium per year discharge to the Great Miami River is not exceeded.

To support the efficient implementation of the Removal Action, the removal activities have been segmented into five distinct parts, as previously discussed. This work plan includes the following activities for Parts 2 and 3.

Part 2 Description

Part 2 of the Removal Action will include the design, construction, and operation of a system to pump uranium contaminated groundwater from the South Groundwater Contaminated Plume to the Great Miami River via routing through FEMP property (see Figure 3). A forcemain, known as the groundwater discharge pipeline, will conduct extracted South Plume groundwater to an aeration facility. The aeration facility will increase the existing groundwater's low dissolved oxygen concentration to an acceptable water quality level before discharge into the Great Miami River. From the aeration facility, the oxygenated groundwater will flow to the new FEMP effluent outfall pipeline at proposed Manhole 176B. The new outfall pipeline will parallel the existing outfall pipeline to the Great Miami River. Existing FEMP effluent discharge will be diverted from the existing outfall pipeline downstream of Manhole 175, the existing National Pollutant Discharge Elimination System (NPDES) monitoring station, and upstream of Manhole 176 at proposed Manhole 176A. The existing effluent will then flow from Manhole 176A through a connecting pipeline into Manhole 176B. At Manhole 176B, the existing effluent will combine with the extracted South Plume groundwater discharge and flow to the river. The existing outfall

pipeline from Manhole 176A to the river will therefore be abandoned and remediated under Operable Unit 3. Modifications to the existing FEMP wastewater flows are shown schematically in Figure 4. Section 3.1.e describes the construction activities that are planned.

Part 3 Description

The Dispute Resolution over the November 1990 EE/CA for the South Plume Removal Action, included installing the Part 3 IAWWT system. The IAWWT system will address the additional mass of uranium discharged to the Great Miami River as a result of the implementation of Removal Action Number 1 (Contaminated Water Under FEMP Buildings, also known as Perched Water), Number 2 (Waste Pit Area Run-off Control), Number 3 (South Plume), and Number 16 (Collect Uncontrolled Process Area Stormwater Run-off). The IAWWT system will have the capability of removing uranium from the existing FEMP effluent discharge in order to maintain a total uranium discharge from the FEMP to the Great Miami River to less than 1700 pounds per year.

Part 3 of the Removal Action will include the design, construction, and operation of a nominal 400 gallons per minute (gpm) IAWWT system which will remove uranium from a portion of the existing FEMP wastewater discharge to the Great Miami River. The IAWWT system will be constructed as two units. One unit will be located at the SWRB and the other unit will be located at the Biodenitrification-Effluent Treatment System (BDN-ETS), see Figure 3. The IAWWT unit located at the SWRB is designated hereafter as the IAWWT (SWRB). The IAWWT unit located at the BDN-ETS is designated hereafter as the IAWWT (BDN-ETS). Figure 4 demonstrates where the IAWWT (SWRB) and IAWWT (BDN-ETS) are located schematically in the overall proposed wastewater flow diagram. Section 3.1.e describes the construction activities that are planned.

IAWWT (SWRB) Description

The IAWWT (SWRB) will consist of two parallel nominal 150 gpm trailer-mounted units amounting to a nominal treatment capacity of 300 gpm. Each trailer-mounted unit will have filters and three ion exchange columns that are operated as a carousel, see Figure 5. The IAWWT (SWRB) will treat combined SWRB and Storm Sewer Lift Station (SSLS) discharges. To increase the flow available for treatment at the IAWWT (SWRB), the SSLS discharge to Manhole 175 will be discontinued as a daily discharge and the flow allowed to pass through to the SWRB. Operation of the SWRB will be modified to account for the additional volume needed to store SSLS dry weather flow. The SWRB chambers will not be pumped out to their current low level as designated in operating procedures, but rather to a higher level to permit a residual amount to remain available for treatment. Dry weather flow from the SSLS and stormwater from the SWRB, if present, will be pumped from the existing

SWRB transfer pump station to a feed tank where pH adjustment will occur before treatment by the IAWWT (SWRB). After passing through the filters and ion exchange columns, the treated water will be discharged into the existing SWRB transfer pump station forcemain for final discharge into Manhole 175. Figure 6 demonstrates the average concentration of uranium that will be delivered to the IAWWT (SWRB) from the SWRB and SSLS based on 1989 data.

When water is not available from the SWRB, the IAWWT (SWRB) will have the capability of treating a nominal 300 gpm of the extracted South Plume groundwater. The groundwater will be diverted from the Part 2 groundwater discharge pipeline at a proposed junction chamber at the SWRB, known as the SWRB valve house, to the SWRB transfer pump station. From the SWRB transfer pump station, the groundwater will be pumped to the IAWWT (SWRB) for subsequent treatment, as described in the previous paragraph.

IAWWT (BDN-ETS) Description

To provide an additional nominal treatment capacity of 100 gpm for the IAWWT system, the three existing ion exchange columns for the 10 gpm uranium removal demonstration plant that had been used to demonstrate proof-of-process testing at the FEMP, will be dismantled, upgraded, and reassembled as the IAWWT (BDN-ETS) in the BDN-ETS building. The influent to and effluent from the IAWWT (BDN-ETS) will tie-in downstream of the ETS secondary clarifiers and upstream to the ETS chlorine contact chamber, see Figure 7. Because the pH of the BDN-ETS effluent is near neutral, pH adjustment is not planned. The IAWWT (BDN-ETS) will be operated as a gross uranium removal treatment system.

Spent ion exchange resin will be sluiced from the columns and replaced with new resin. No regeneration will occur at the IAWWT (SWRB) or at the IAWWT (BDN-ETS). Options for handling the spent ion exchange resin include storage until regeneration is possible with the construction of the AWWT, or direct disposal (or incineration) of the spent resin as a low level radioactive waste. The most likely option is to store the resin at a designated location within the FEMP until the AWWT is completed. The AWWT will have the capacity for spent resin regeneration. In any event, the spent resin will be managed as a low-level radioactive material/waste.

2.3 Related Actions

The following paragraphs describe related actions other than those actions necessary to implement Parts 1, 4, and 5 of the South Groundwater Contamination Plume Removal Action. A brief description of Parts 1, 4, and 5 are discussed in Section 2.2. Details of these

Removal Action Parts can be found in separate documents.

Past Actions

A Stormwater Retention Basin (SWRB), see Figure 3, was constructed and placed into operation in October 1986 to intercept contaminated run-off from the former FEMP Production Area and pump the collected run-off directly to the Great Miami River. This run-off had previously flowed into Paddy's Run via a drainage ditch referred to as the Storm Sewer Outfall Ditch, (See Figure 3). Construction of an additional east chamber to the SWRB was completed in December 1988. The expanded SWRB was designed to retain the run-off from a 10-year/24-hour rainfall event. The two chambered sequential batch filling and discharging operation of the SWRB allows for quiescent settling conditions for removing suspended solids in the run-off and therefore greatly reduces the contribution of contamination to the Great Miami River.

The public has been notified of the South Plume. Well and cistern sampling in the South Plume area has been performed by the Ohio Department of Health on the behalf of the DOE.

An alternative water supply has been provided to a private residence located along Willey Road in the northern portion of the plume. Several other private residences in the South Plume area are being provided with bottled drinking water.

Present and Future Actions

An on-going groundwater monitoring program is being conducted by the FEMP for a number of residential wells in the South Plume area. The results of the groundwater analysis are being reported to the public. This effort will continue in Part 4 of this Removal Action.

Run-off from most of the surface of the FEMP Waste Storage Area is collected and sent to the FEMP wastewater treatment system. The remaining surface and perimeter run-off flows west and southwest to Paddy's Run. A separate Removal Action, entitled Waste Pit Area Run-off Control (referred to in the Consent Agreement as Removal Action Number 2), is currently underway by the DOE to address the stormwater run-off from the Waste Pit perimeter areas and prevent it from flowing to Paddy's Run. This Removal Action is consistent with the implementation of the Final Remedial Action for Operable Unit 1. A work plan for this Removal Action has been submitted to and approved by the U.S. EPA.

The Storm Sewer Improvements - Plantwide, is a two-fold project that addresses run-off from the former FEMP Production Area. One portion of this project will expand the existing FEMP storm sewer system to collect and direct run-off from areas within the former Production Area presently not channeled to the SWRB. This portion of the project is known as the Collect Uncontrolled Production Area

Stormwater Run-off (referred to in the Amended Consent Agreement as Removal Action Number 16). The second portion of the project will provide for the rehabilitation and/or replacement of several sections of the existing storm sewer system.

In addition, another related action planned under Part 2 of the South Plume Removal Action, involves increasing the flow discharge rate of the SWRB pumpout capacity from 550 gpm to a nominal 700 gpm to minimize SWRB emergency overflow events. This action is being addressed under this Removal Action because of its proximity and interfacing with the design, construction, and operation of Part 2 and Part 3.

2.4 Integration with the Final Remedial Action

The Removal Action will contribute to the efficient performance of the final remediation to the extent practicable. All design and construction activities associated with the Removal Action will be reviewed, and approved, by the DOE and WEMCO Operable Unit 5 Managers to assure consistency with the final remedial program.

Parts 1, 2, 3, 4, and 5 of the Removal Action are consistent with all selected Operable Unit 5 final Remedial Action alternatives which involve pumping contaminated groundwater from the South Plume area. The most likely selected remedial alternative would involve the pumping of the contaminated water from the Great Miami Aquifer with subsequent treatment. As previously described, Part 2 is consistent with the pumping aspect of the most likely final Remedial Action alternative. Part 3 is an interim step addressing the mass of uranium discharged in the untreated contaminated groundwater. The IAWWT system will be operational before Part 2 operations begin and will to continue to operate until the proposed Advanced Wastewater Treatment facility (AWWT) comes on-line. At that time, the IAWWT system will be taken off-line. The AWWT is being designed to reduce the existing FEMP wastewater discharge contaminant loading to the Great Miami River and to address the loading resulting from Remedial Actions for Operable Units 1 through 4. Expansion of the AWWT to treat the groundwater from this Removal Action and future Remedial Action recovery wells installed as part of Operable Unit 5 will be determined later.

As the result of the presence of the PRRS plumes and to provide efficient groundwater management and aquifer restoration, the South Plume area has been divided into three "zones." Part 2 of this Removal Action addresses Zone 1, the South Plume area where FEMP uranium groundwater contamination is of concern. Zone 2 is the South Plume area where FEMP uranium and PRRS inorganic and PRRS organic groundwater contamination exists. The extent of this portion of the South Plume would be determined by the location of the uranium groundwater concentration based on the Record of Decision's (ROD) clean-up level for uranium in groundwater for the remediation of the FEMP's Operable Unit 5. A possible second

recovery well field, discharge pipeline, and treatment system including inorganic and organic treatment as an extension to the AWWT facility may be necessary. The FEMP integration with the clean-up activities at the PRRS will be necessary in addressing Zone 2. Zone 3 is the South Plume area in which PRRS contaminants exist, but uranium concentrations are below the clean-up level stated in the ROD for the FEMP's Operable Unit 5.

Part 2 is also consistent with the subsequent treatment aspect of the expected final action in that the groundwater discharge pipeline is being routed back to the FEMP near the location of the future AWWT facility, see Figure 3. The groundwater discharge pipeline located outside the FEMP property boundary will be sized to handle additional flows from future Remedial Action recovery wells located in the South Plume area or to have the capacity to receive the additional flows from future Remedial Action recovery wells located within the FEMP property boundary, depending on whether or not a second pipeline will be needed for the Zone 2 discharge. A junction chamber, known as the SWRB valve house, is being provided on the groundwater discharge pipeline so that diversion of the flow to the AWWT can be readily accomplished in the future.

The South Groundwater Contamination Plume Removal Action will be implemented in advance of the final remediation for Operable Unit 5. Therefore, no scheduling conflicts are anticipated.

2.5 Roles of the Participants

The DOE is the lead agency and will coordinate and execute this Removal Action.

The U.S. EPA has reviewed and, through the Consent Agreement Dispute Resolution process, approved the EE/CA document identifying the selected removal alternative for the South Groundwater Contamination Plume. The U.S. EPA will also review and approve the Work Plans for this Removal Action. The OEPA will provide guidance and participate in the development and review of the Work Plan.

As a contractor to the DOE, Advanced Sciences Incorporated (ASI) and their subcontractor International Technology Corporation (IT) are conducting the RI/FS program including activities such as groundwater sampling and development of a groundwater flow model for the South Plume. ASI/IT will also locate and provide the design criteria of the Part 2 recovery wells.

Westinghouse Environmental Management Company of Ohio (WEMCO), as the FEMP prime contractor, is responsible for the preparation of the Work Plan and the coordination, management, and implementation of this Removal Action in a manner consistent with the U.S. EPA approved Work Plan, the DOE, and regulatory guidance. WEMCO will also provide the design effort for the Part 3 IAWWT (BDN-ETS), as discussed in Section 2.4.

A. M. Kinney (AMK), as contractor to WEMCO, will provide the Removal Action Part 2 design effort, with the exception of the Part 2 recovery well field. AMK will provide the Part 2 construction drawings and specifications which will include the recovery well field information provided by ASI/IT and Parsons. AMK will also be providing standard operating procedures for the Part 2 effort.

Ralph M. Parsons, Co., (Parsons), as contractor to the WEMCO, will provide the design effort for the Part 3 IAWWT (SWRB), as discussed in Section 2.4. Parsons will also be providing the design of the Part 2 recovery well field's monitoring well network, the operations and maintenance manual pertaining to the Part 2 recovery well operation strategy, and preparation of a test well and pumping test specification to verify groundwater modeling efforts at the recovery well field. Parsons will also be providing standard operating procedures for the Part 3 IAWWT (SWRB) effort and the IAWWT (BDN-ETS) effort.

U.S. Army Corps of Engineers (COE), as a contractor to the DOE, will negotiate right-of-entry agreements and easements with property owners affected by Removal Action Part 2 construction. The COE will also conduct an archaeological and historical resource survey for the areas affected by Part 2 for review and approval by the Ohio State Historic Preservation Officer.

RUST Engineering, as a contractor to WEMCO, will provide construction management for Part 2 and Part 3 of the Removal Action.

The contractors for the Part 2 and Part 3 installation will be determined through the DOE bid and award process.

Property owners affected by the Part 2 construction (including groundwater recovery wells, a groundwater discharge pipeline, and appurtenances) will be involved in the negotiations for the acquisition of easements. Replacement of the existing outfall line will occur on an existing easement.

3.0 SUPPORT ACTIVITIES

3.1 Project Planning Activities

Activities that will be undertaken prior to the actual site work are planning, training, design, and management of the Removal Action.

The following distinct engineering phases will be performed to provide the necessary definition for development of accurate scope, cost, and schedule documents:

a. Project Planning

Included in this activity will be the preparation of detailed task listings and delineation of responsibilities to support

the construction schedules. An archeological survey will be conducted prior to any installation of pipeline or construction.

Concerning Part 2, the number and location of both the monitoring and recovery wells along with the pumping rate of each recovery well may be modified as additional groundwater field data is analyzed and modeling continues.

Concerning Part 3, the 10 gpm uranium removal demonstration plant underwent proof-of-process testing on existing FEMP wastewater effluents. The test plan for the demonstration plant dated October 23, 1990 was transmitted to OEPA on November 28, 1990 by DOE letter DOE-205-91. Results from this study were incorporated into the design of the IAWWT (SWRB) and the IAWWT (BDN-ETS).

b. Removal Criteria

Detailed criteria, such as the exact number and location of the recovery wells (Part 2) and the configuration of the IAWWT system (Part 3), will be established to complete design documents.

c. Design of Removal Action

Definitive design documents will be prepared for the Removal Action construction work. The Part 2 design documents will include 50%, 95/100%, and Certified for Construction (CFC) design drawings and specifications. The Part 3 IAWWT (SWRB) design documents will include two separate packages. The first package is an equipment specification for the process system including a 20% design basis document, 90% formal review, and CFC documents. The second package is an integrated utilities design (electric, telephone, water, etc.) comprised of a 20% design basis document, 50%, 90%, and CFC document. The Part 3 IAWWT (BDN-ETS) design documents will include 50%, 95%/100%, and CFC design drawings and specifications.

d. Training of Personnel

All personnel involved will be trained in accordance with the Occupational Safety and Health Administration (OSHA) standards found in 29 CFR 1910.120.

e. Bid and Award/Construction Management

All bid and award documents will be prepared for the Removal Action construction work along with the procurement of all equipment, materials and subcontractors necessary to complete the removal action construction work. Part 2 has been divided

into five construction bid packages, as shown in Figure 3 and Part 3 has been divided into two packages. These packages are as follows:

Package 2A - Groundwater Discharge Pipeline and Outfall Pipeline Construction

This package of the planned construction will involve excavations that will allow for the installation of approximately 7380 feet of a transmission forcemain pipeline, known as the groundwater discharge pipeline, from the location of the recovery wells to Manhole 176B. The design will allow the flexibility for further recovery well installation and operation should it become necessary. At the present time, work under this package is envisioned to also include reconstruction of an existing roadway embankment across the Storm Sewer Outfall Ditch, including the replacement of the two existing 66 inch diameter underlying drainage culverts. The new groundwater discharge pipeline would be placed in the restored embankment.

This package also includes the construction of the groundwater discharge pipeline junction chamber located at the SWRB, known as the SWRB valve house. With the installation of connecting pipelines, extracted groundwater flow can be directed from the SWRB valve house to the IAWWT (SWRB), to and from the AWWT (planned as future construction), and to and from the SWRB transfer pump station. Flow measuring and sampling instruments for NPDES monitoring along with valves and other piping appurtenances, will also be installed at the SWRB valve house.

In addition, the SWRB pumpout capability will be increased from 550 gpm to a nominal capacity of 700 gpm, including electrical upgrades. The increased pumpout capability will reduce the possibility of SWRB emergency overflow events into the Storm Sewer Outfall Ditch. Pumpout capacity, in addition to the nominal 300 gpm delivered to the IAWWT (SWRB), will occur through the existing SWRB transfer pump station forcemain and discharged into Manhole 175 only when the water elevation within the SWRB is above a predesignated "high" operating level to be specified in standard operating procedures. Furthermore, discharge to the groundwater discharge pipeline (at the SWRB valve house) will occur only when the water elevation within the SWRB is above a predesignated "high-high" emergency operating level to also be specified in standard operating procedures.

From Manhole 176B, approximately 3680 feet of outfall pipeline will be installed in the existing outfall pipeline easement to, and including, proposed Manhole 183B ~~182B~~. This will involve excavations that will allow for the installation of a

gravity sewer and associated manholes (Manholes 176B through Manhole ~~182B~~ 183B, 8 ~~7~~ manholes total), to replace the existing outfall pipeline. The outfall pipeline will be designed for a capacity of 8000 gpm and will be free flowing except during high river conditions. At high river conditions, the outlet will become submerged resulting in a portion of the outfall pipeline to experience surcharged conditions. However, because of the hydraulic design and the physical geometry of the pipeline slope, the surcharged condition will not extend upstream from the outlet beyond proposed Manhole 179B under a 100-year flooding condition for the Great Miami River. Therefore, the capacity of the pipeline to carry the 8000 gpm design flow will not be compromised. The manholes from Manhole 177B to Manhole 183B ~~182B~~ will be designed as pressure manholes and will have watertight and bolted manhole frames and lids to prevent a surcharged pipe from overflowing out of the manholes. Associated outfall pipeline construction well include a diversion manhole (Manhole 176A) to divert existing FEMP wastewater effluent from the existing outfall pipeline downstream of Manhole 175 through a connecting pipeline to Manhole 176B.

Package 2B.1 - Outfall Outlet ~~and Aeration Facility Construction~~

This package of the planned construction will involve excavations that will allow for the remaining installation of approximately 500 feet of outfall pipeline from Manhole 183B ~~182B~~ to its outlet at the Great Miami River. In addition, the outlet of the outfall pipeline will be submerged at all times and placed in a cofferdam with riprap placed both upstream and downstream to protect the river bank and outfall outlet from erosion.

Package 2B.2 - Aeration Facility

This package ~~also~~ includes the construction of the aeration facility near Manhole 176B. This facility will increase the anticipated low dissolved oxygen (DO) concentration from the South Plume groundwater to meet or exceed the minimum DO concentration for the FEMP effluent discharge to the Great Miami River. The facility will house an aeration tank and blowers to transfer air to the water before it flows into Manhole 176B.

Package 2C - Recovery Well Field Construction

This package of the planned construction will include the installation of the recovery well field (groundwater monitoring wells, recovery wells, access roadway, electrical services, instrumentation, etc.) and approximately 1570 feet

of groundwater discharge pipeline to connect the recovery wells to the portion of the pipeline installed under Package 2A. Ongoing groundwater modeling will be used to determine the number, depth, spacing, and maximum extraction rate of the recovery wells. The top of the screen will be set below the existing groundwater surface elevation so that no portion of the screen will be exposed when drawdown of the aquifer occurs. Each well will be provided with a throttling capability to control its pumping rate. Also, additional stubs with blind flanges will be provided to allow future connections of additional wells, if required.

Package 2D - Test Well Construction

This package of the planned construction includes test well installation and operation at, or near, one of the recovery well sites (presently targeting the centrally-located recovery well site within a row of five projected recovery wells) to allow verification of the computer model predictions prior to completing installation of the recovery wells. During the aquifer pump-down test, extracted groundwater will be pumped through the groundwater discharge pipeline installed under Package 2A to the SWRB transfer pump station. It is currently envisioned that the test well will be operated at a flow of approximately 1200 gpm to adequately stress the aquifer and verify the modeling predictions. In turn, most of the extracted groundwater will be treated by the IAWWT (SWRB). The pump test will be conducted when the SWRB is at a very low level and when weather forecasts show the unlikelihood of rain. Groundwater extracted during the pump test will have a low dissolved oxygen (DO) concentration, such that a waiver of the permitted DO concentration range will be required. However, due to delays in obtaining property access, the test well may not be installed until after the Package 2B.2 Aeration Facility is constructed and placed in operation.

~~The procurement of recovery well pumps and appurtenances for their subsequent installation under Package 2C will be held up until the pump test is completed and a cursory confirmation of the certified for construction package is made.~~

Part 3 IAWWT (SWRB) Packages

The IAWWT (SWRB) construction has been further divided into two packages:

Process System Equipment Specification Package

This package of the planned construction includes two trailer-mounted ion exchange systems capable of the nominal 300 gpm treatment capacity and ancillary equipment.

Utilities Package

This package of the planned construction includes pH adjustment facilities, piping tie-ins, electrical, telephone, water, etc. to service the IAWWT (SWRB).

Part 3 IAWWT (BDN-ETS) Package

This package includes the dismantling, upgrading, and reassembling of portions of the 10 gpm uranium removal demonstration plant in the BDN-ETS building. In addition, it will involve supplying the IAWWT (BDN-ETS) with electricity and plant air supply.

f. Removal Action Schedule

Every effort is being exercised to expedite the completion of design, contract bid and award, procurement of equipment, acquisition of the necessary easements and rights-of-entry, and construction to achieve an operational date of July 31, 1992, for the IAWWT system (Part 3) and January 29, 1993, for the pumping and discharge system (Part 2). As an example, Part 2A represents the critical path construction sequence and has been broken out from Part 2 so that construction can begin as soon as possible. With the installation of the groundwater discharge pipeline portion from the recovery well field to the SWRB and the installation and operability of the IAWWT system, the test well under Package 2D can be installed and operated at the earliest possible time. Also, Package 2B.2 was separated to allow construction of the Aeration Facility without any access impacts. In addition, various equipment and pipes have been pre-purchased to expedite construction schedules.

The IAWWT system will continue to operate until the proposed AWWT facility comes on-line. At the time, the IAWWT system will be taken off-line.

3.2 Additional Data

~~Ongoing groundwater modeling will be used to determine the exact layout of the recovery well field. The preliminary results from the aquifer pump down test from the test well will allow verification of the computer model prior to completing the installation of the well field.~~ The strategy during Part 2 operation will be dependent on the monitoring of drawdown levels and PRRS plume response at the recovery wells and in the monitoring well network. Data from the groundwater monitoring well network, that may consist of both existing and proposed monitoring wells, located up-gradient and down-gradient of the recovery wells will dictate the pumping rate of each recovery well. As the operation of the well field to maintain a hydraulic barrier is considered the most complicated part of the

removal action, a ~~O&M manual~~ Design, Monitoring, and Evaluation Program Plan (DMEPP) is being prepared to address oversight of the system. ~~A draft of that part of the document has been issued to for EPA review. and comments received are presently being addressed.~~

The groundwater model will be used to predict how the aquifer may behave when the Pumping and Discharge System is operational under various conditions. Uranium concentration and water elevation data, obtained from the monitoring well network, will be used to evaluate the accuracy of the model. The model will be periodically calibrated to reflect observed field conditions.

3.3 Training Requirements

All personnel involved with the implementation of this Removal Action will be trained in accordance with the Occupational Safety and Health Administration (OHSA) standards found in 29 CFR 1910.120.

3.4 Access to Private Property

The COE, as a contractor to the DOE, is responsible for negotiations with the owners of private property for acquiring the necessary easements and the rights-to-entry for completion of Part 2 of this Removal Action. The project operation date is contingent upon negotiation for the easement rights with the affected property owners. Figure 3 shows the locations of the private property that may be affected.

4.0 FIELD ACTIVITIES

Part 2 and Part 3 of the South Groundwater Contamination Plume Removal Action will be implemented through several distinct construction packages as described in Section 3.1.e.

Wetlands on the FEMP have been delineated as part of the RI/FS. Part 2 and Part 3 will not disturb any wetlands as presently delineated.

Prior to operation, WEMCO will perform acceptance testing of each component of the Part 2 and Part 3 system.

Operations and Maintenance (O&M)

After completion of the performance acceptance test on the groundwater recovery pumping wells, groundwater discharge pipeline system, SWRB transfer pump station, aeration facility, new outfall pipeline, and the IAWWT system, these systems will be operated and maintained by DOE. Standard Operating Procedures (SOPs) which describe the O&M for each system will be prepared during the construction to incorporate actual manufacturer's information. A separate O&M manual, the DMEPP, (discussed previously) is being prepared for describing the procedures for maintaining the hydraulic barrier provided by the recovery wells.

5.0 SAMPLING AND ANALYSIS PLAN

As stated in the Consent Agreement, if the DOE determines that any activities of work being implemented under this Removal Action ~~Consent Agreement~~ may create an imminent threat to human health or the environment from the release or threat of release of a hazardous substance, pollutant, contaminant, or hazardous constituent, it may stop any work or activities for such period of time as needed to respond and take whatever action is necessary to abate the danger.

5.1 Groundwater

At present, the DOE conducts a groundwater monitoring program as agreed upon in the Consent Agreement, as amended, between the U.S. EPA and DOE. This includes existing privately-owned wells and monitoring wells in the South Plume area. This monitoring of existing wells will continue. The groundwater monitoring program will be expanded to include groundwater monitoring data from each of the recovery and monitoring wells installed in Part 2. The parameters and frequency of sampling for the monitoring and recovery wells will be included in the DMEPP ~~operations and maintenance manual.~~

The results from the WEMCO groundwater monitoring program will be included in the FEMP Annual Environmental Monitoring Report. This report is available for review in the Administrative Record at the Public Environmental Information Center located near the FEMP on State Route 128.

5.2 Wastewater

The sampling and analysis program for the monitoring of radionuclides in wastewater discharges has been previously established in meeting the requirements of the Radiation Discharge Information section of the Federal Facilities Compliance Agreement (FFCA). The monitoring point of interest is Discharge 001 (Manhole 175) in which the combined flow of all existing FEMP wastewater effluents are monitored before discharging to the Great Miami River. Discharges are analyzed daily for alpha and beta radiation, and uranium. Weekly grab samples are analyzed for thorium-234. Daily samples are composited and analyzed monthly for neptunium-237, plutonium-238, plutonium-239/240, technetium-99, potassium-40, actinium-227, lead-210, thorium-228, thorium-230, thorium-232, uranium-233, uranium-234, uranium-235, uranium-236, uranium-238, radium-226, and radium-228. Daily samples are composited and analyzed quarterly for cesium-137, ruthenium-106, and strontium-90.

A similar radionuclide sampling and analysis program, as described above, will be implemented for monitoring the discharge from the South Plume Removal Action and emergency SWRB pumping, prior to mixing with the existing FEMP effluent discharge. The sampling point will be located downstream of the SWRB emergency pumping tie-

in at the SWRB valve house. Also, the conventional pollutant parameters currently monitored under the existing NPDES permit for outfall 001 and applicable to the South Plume discharge will be monitored and will include total nonfilterable residue, , pH, and flow rate. This new discharge point monitoring information will be reported as NPDES outfall 1I000004003. In addition, the combined South Plume and existing FEMP effluent (future total FEMP discharge), dissolved oxygen, iron, and manganese concentrations will be reported at Manhole 183B ~~182B~~ as NPDES outfall 1I000004004.

Alpha and beta radiation and uranium will be analyzed for at the inlet and outlet of the IAWWT (SWRB) to assess its performance. The conventional pollutants (total nonfilterable residue, and pH) and flow rate will also be monitored at the inlet and outlet of the IAWWT (SWRB). The inlet monitoring information will be obtained via existing NPDES outfall 1I000004606. The outlet monitored information will be obtained from new equipment provided as part of the trailer packages and reported as the proposed NPDES outfall 1I000004607. The monitored information from the IAWWT (BDN-ETS) discharge will continue to be obtained and reported as the existing monitored information NPDES outfall 1I000004605. A locked valve will normally prevent flow out of the emergency bypass for the SWRB. A flow meter will be installed to measure the quantity of flow discharged in the event that the emergency bypass must be used to keep the SWRB from overflowing. Only flow will be monitored as 606 and 003 will provide other pertinent NPDES information. Figure 4 shows an overview of the proposed FEMP wastewater flow diagram with the addition of the IAWWT (SWRB) and IAWWT (BDN-ETS) and proposed monitoring points 003, 004, 607, and 608. Tables 1 and 2 compare the existing and proposed NPDES and FFCA Parameters of the four proposed outfalls with existing outfalls 001, 604, 605, 606. In addition, Table 2 also shows the target PRRS parameters that will be monitored quarterly.

5.3 Soil and Rubble

The sampling and analysis program for the monitoring of potentially contaminated soils and rubble which could be encountered during construction is presented in Attachment I.

6.0 HEALTH AND SAFETY PLAN

The work to be performed shall be consistent with the Health and Safety Plan prepared for this Removal Action. The plan identifies, evaluates, and controls all safety and health hazards. In addition, it provides for emergency response for hazardous operations. The plan is consistent with 29 CFR 1910.120 and has been written to supplement the formal FEMP Site Health and Safety Plan. Safety documentation will be prepared according to FEMP-2116 Topical Manual "Implementing FEMP Policies and Procedures for System Safety Analysis and Review System" and DOE/OR-901 Guidance for Preparation of Safety Analysis Reports.

7.0 PERMIT INFORMATION SUMMARY

Attachment II of this work plan contains information pertaining to permits which would otherwise be required during the implementation of this Removal Action in the absence of provisions of Section 121(e)(1) of CERCLA and the NCP.

8.0 QUALITY ASSURANCE

The South Groundwater Contamination Plume Removal Action work will be conducted in accordance with the requirements of the overall quality assurance program at the FEMP which is described in the site Quality Assurance Plan, FEMP 2139. The Quality Assurance Plan is based on the criteria specified in ASME NQA-1, Federal EPA Guideline QAMS-005/80 and DOE Orders 5600.6 and 5400.1. Specific quality assurance requirements will be incorporated within the written and approved procedures and within the personnel training. The Quality Assurance Department will conduct periodic surveillances to verify compliance.

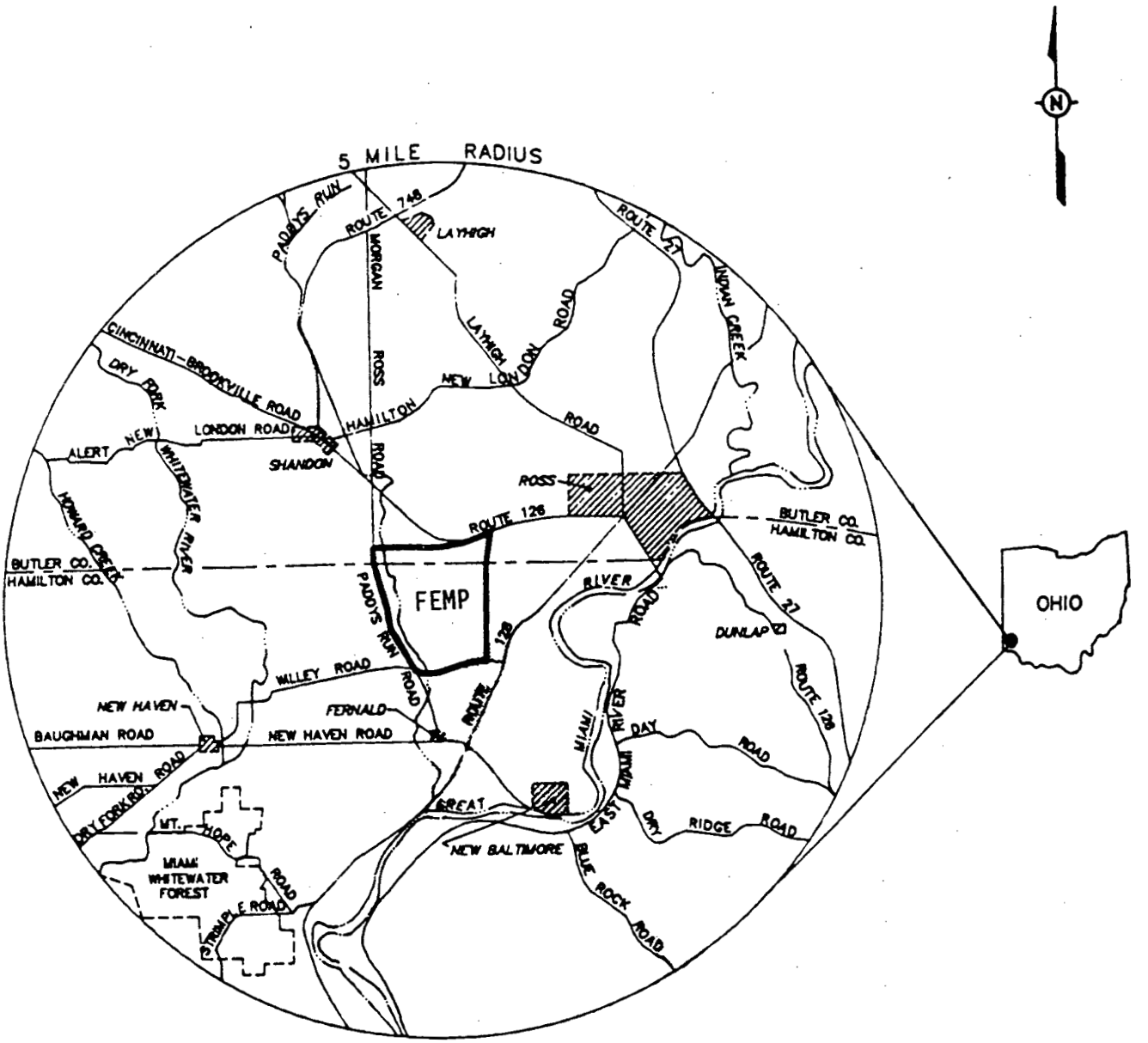

Figure 1 Location Map

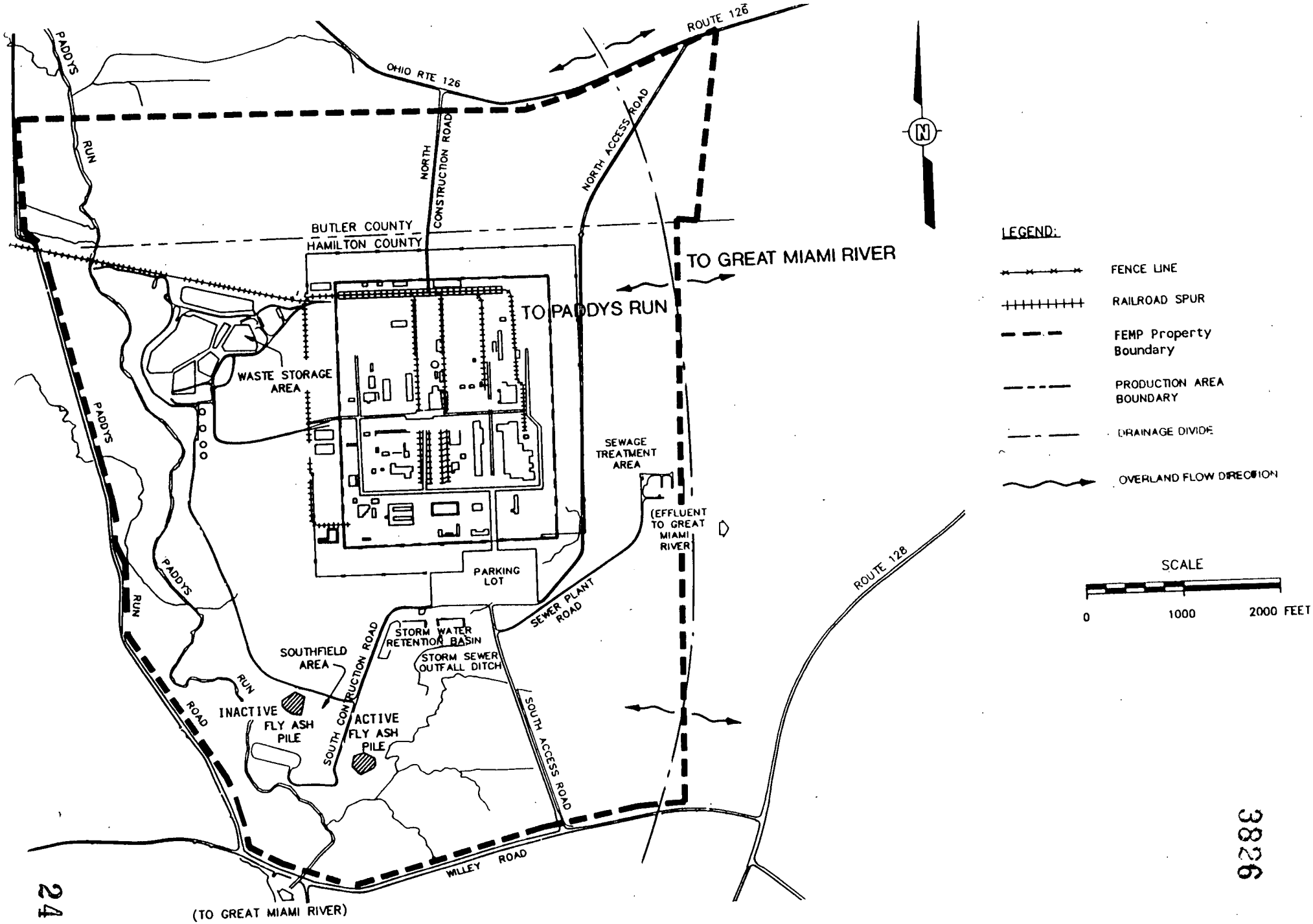

Figure 2 Site Map

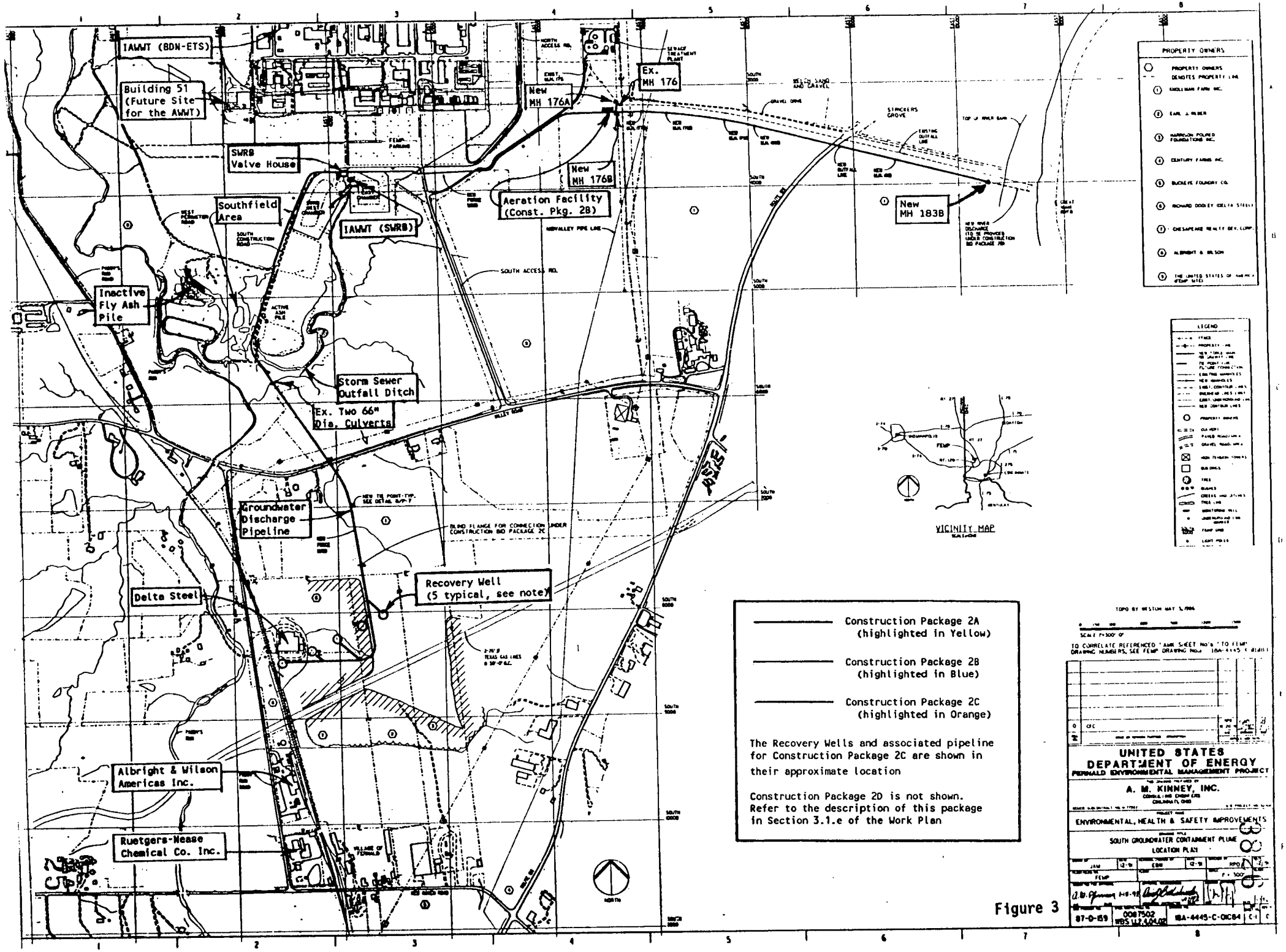
IAWWT (BDN-ETS)
Building 51 (Future Site for the AWWT)
SWRB Valve House
Southfield Area
IAWWT (SWRB)
Inactive Fly Ash Pile
Storm Sewer Outfall Ditch
Ex. Two 66" Dia. Culverts
Groundwater Discharge Pipeline
Delta Steel
Albright & Wilson Americas Inc.
Ruetgers-Nease Chemical Co. Inc.
New MH 176A
Ex. MH 176
New MH 176B
Aeration Facility (Const. Pkg. 2B)
New MH 183B
Recovery Well (5 typical, see note)
PROPERTY OWNERS
LEGEND
VICINITY MAP
Construction Package 2A (highlighted in Yellow)
Construction Package 2B (highlighted in Blue)
Construction Package 2C (highlighted in Orange)
The Recovery Wells and associated pipeline for Construction Package 2C are shown in their approximate location
Construction Package 2D is not shown. Refer to the description of this package in Section 3.1.e of the Work Plan
UNITED STATES DEPARTMENT OF ENERGY
FERNALD ENVIRONMENTAL MANAGEMENT PROJECT
A. M. KINNEY, INC.
ENVIRONMENTAL, HEALTH & SAFETY IMPROVEMENTS
SOUTH GROUNDWATER CONTAINMENT PLUME
LOCATION PLAN
87-0-159
0087502
WBS 1.1.4.04.02
IBA-4445-C-00084

Figure 3

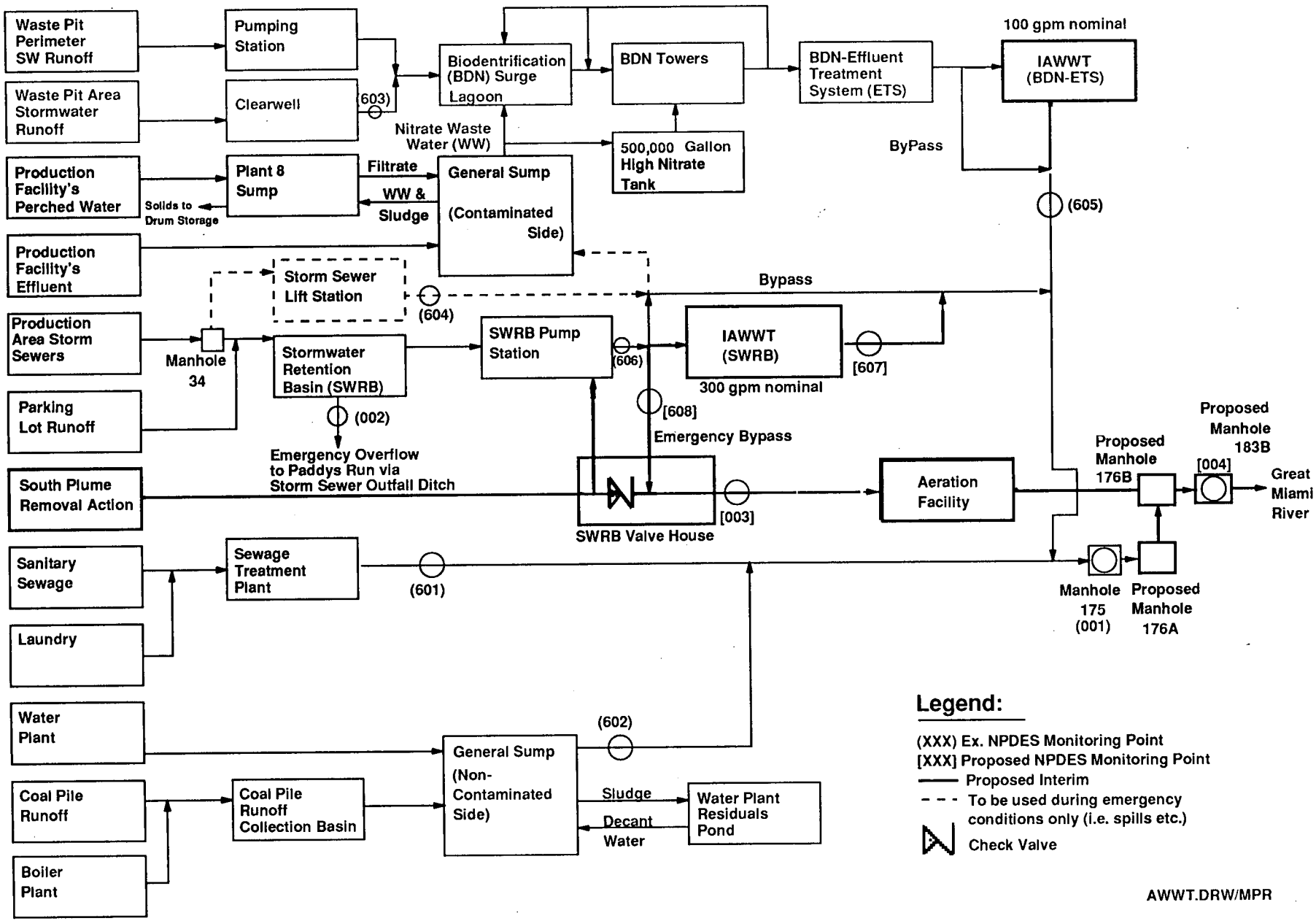

Proposed Interim Wastewater Flow Diagram (Overview)

Figure 4

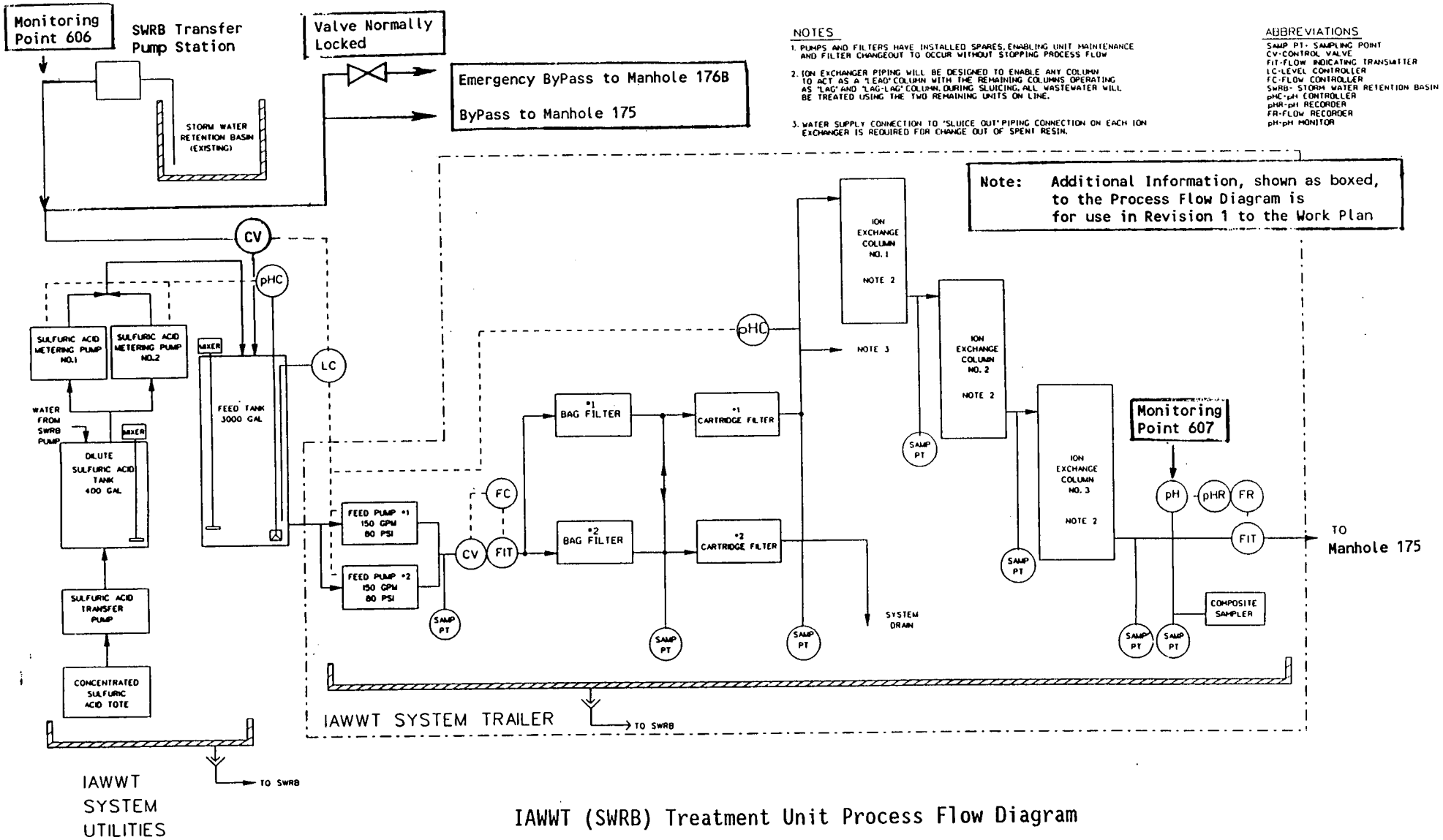

IAWWT (SWRB) Treatment Unit Process Flow Diagram

Figure 5

1989 URANIUM CONCENTRATION

FOR THE STORM SEWER LIFT STAION (SSLS) AND STORMWATER RETENTION BASIN (SWRB)

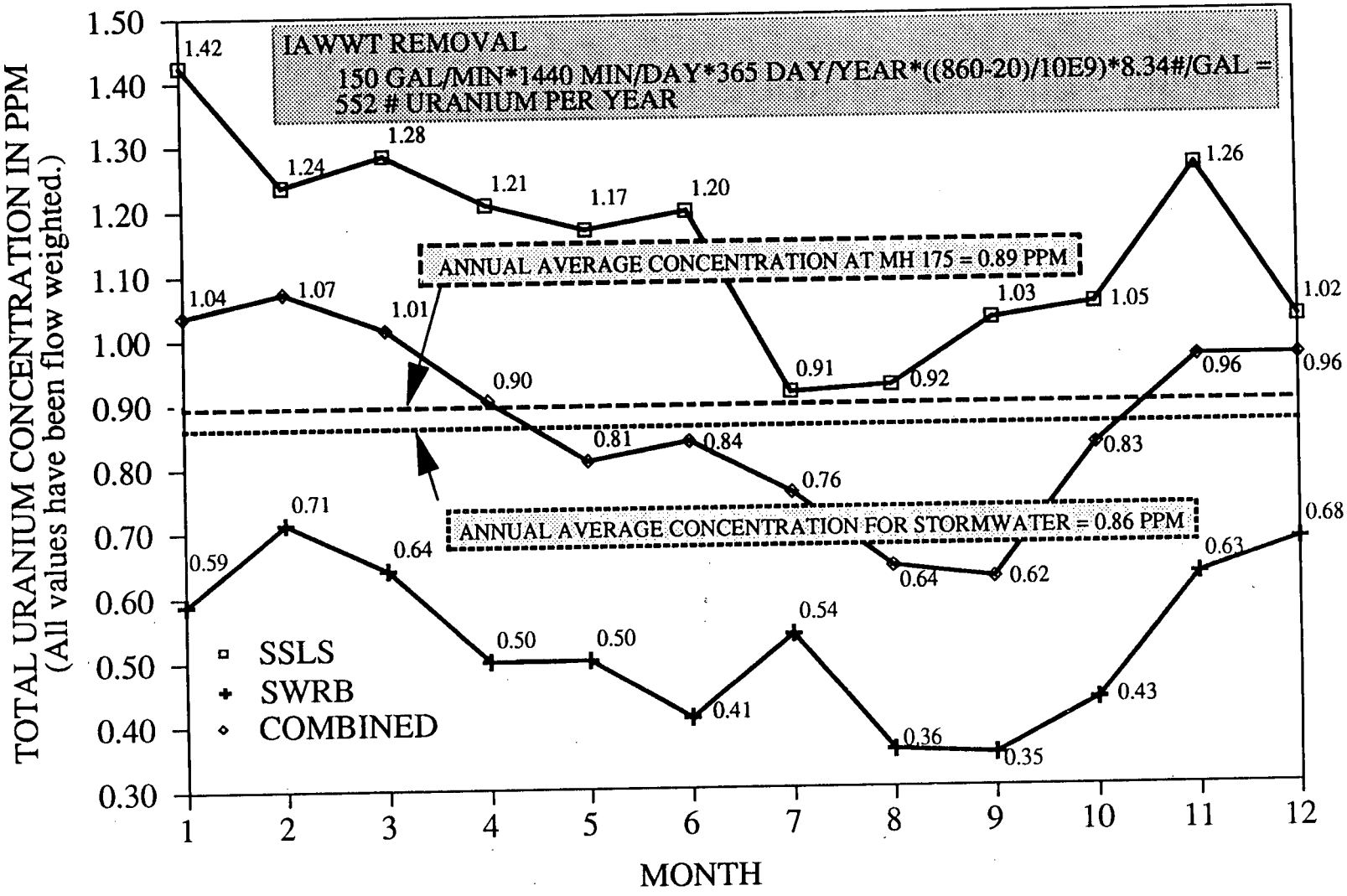

Figure 6

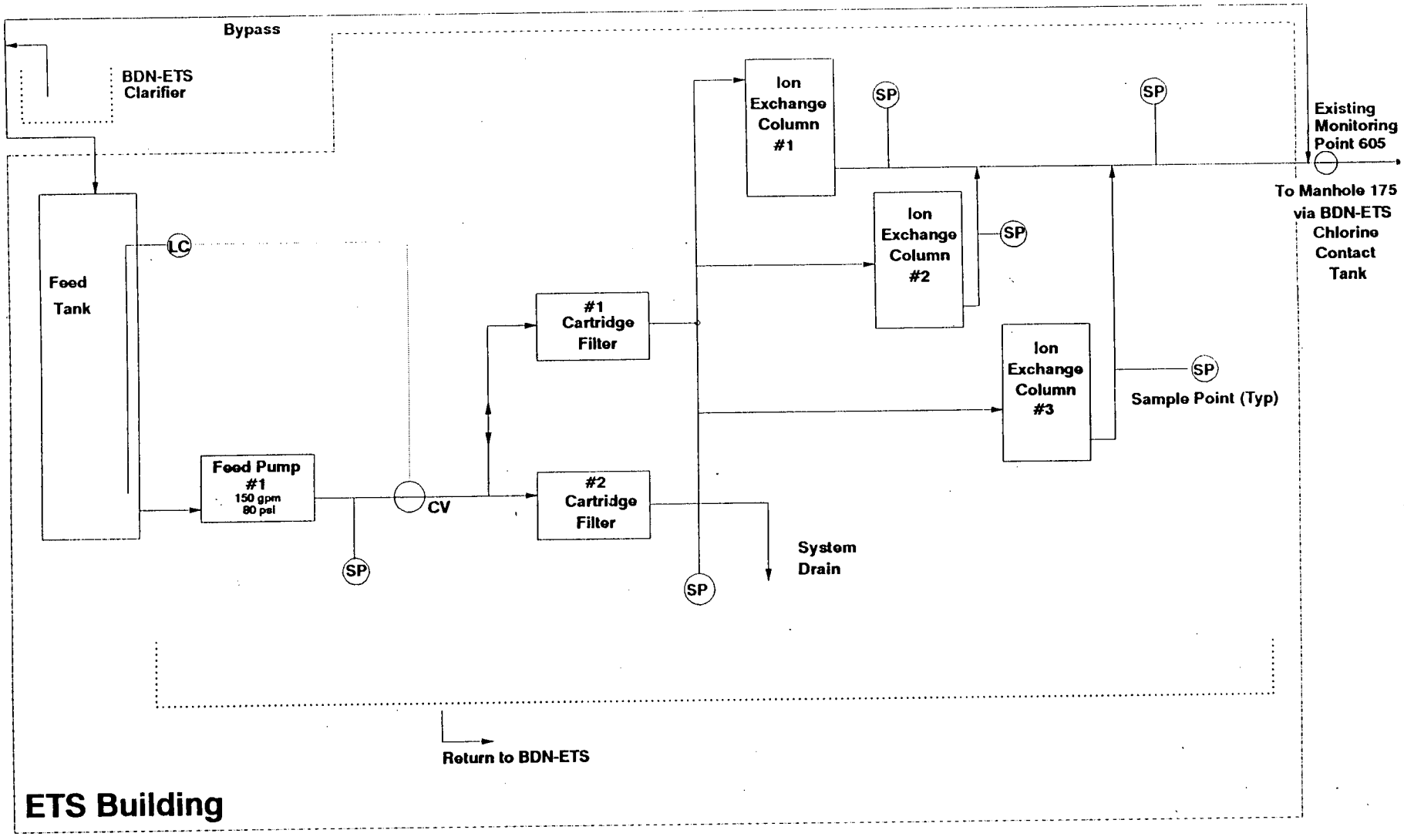

IAWWT (BDN-ETS) Treatment Unit Process Flow Diagram

Figure 7

BDN-ETS.DRW

3826

Table 1 NPDES Monitoring Parameters

MONITORING PARAMETER	OUTFALL NUMBER							
	(604)[A]	(605)	(606)[B]	[607]	[608][B]	[004]	[003]	(001)
Residue, Total Nonfilterable	(3)	(3)	(4)	[3]	-	-	[3]	(3)
Flowrate	(1)	(1)	(1)	[1]	[1]	-	[1]	(1)
pH, SU Continuously Monitored	-	-	-	[1]	-	-	[1]	(1)
Oil and Grease, Total	(2)	-	(5)	-	-	-	-	(2)
Dissolved Oxygen	-	-	-	-	-	[2]	-	(2)
Carb. BOD_5	-	(3)	-	-	-	-	-	(3)
NO_3-N		(3)	-	-	-	-	-	(3)
NH_3-N	-	(3)	-	-	-	-	-	(3)
Total CN	-	-	-	-	-	-	-	(2)
Total Cr, Cu, Ni	-	(3)	-	-	-	-	-	(3)
Total: F		-	-	-	-	-	-	(3)
Total: Pb, Ag	-	-	-	-	-	-	-	(3)
Fe, Mn	-	-	-	-	-	[2]	-	-
Cr, Dissolved Hexavalent	-	(3)	-	-	-	-	-	(3)

Notes:

( ) indicates Existing Sampling Point or Monitoring Parameter analyzed
[ ] indicates Proposed Sampling Point or Monitoring Parameter to be analyzed
A. The SSLS discharge (604) to Manhole 175 will be discontinued after Part 2 becomes operational
B. Parameters monitored only when discharging

1. Continuously monitored
2. Grab Sample taken 1/Week
3. 24 Hour Composite sampled 1/Week
4. 24 Hour Composite sampled 1/Day
5. Grab Sample taken 1/Day

Outfall Number	Location
(604)	Storm Sewer Lift Station Discharge
(605)	Biodenitrification - Effluent Treatment System Effluent
(606)	SWRB Pump Station Discharge
[607]	IAWWT (SWRB) Effluent
[608]	proposed Emergency Bypass
(001)	Manhole 175
[003]	SWRB Valve house
[004]	proposed Manhole 183B

Table 2 FFCA Monitoring and PRRS Parameters

MONITORING PARAMETER	OUTFALL NUMBER							
	(604)[A]	(605)	(606)[B]	[607]	[608]	[004]	[003]	(001)
FFCA								
Alpha & Beta Radiation	-	(2)	[2]	[2]	-	-	[2]	(2)
Uranium	(2)	(2)	(2)	[2]	-	-	[2]	(2)
Uranium-233,-234,-235,-236,-238	-	-	-	-	-	-	[3]	(3)
Thorium-228,-230,-232	-	-	-	-	-	-	[3]	(3)
Thorium-234	-	-	-	-	-	-	[1]	(1)
Radium-226,-238	-	-	-	-	-	-	[3]	(3)
Actinium-227	-	-	-	-	-	-	[3]	(3)
Lead-210	-	-	-	-	-	-	[3]	(3)
Neptunium-237	-	-	-	-	-	-	[3]	(3)
Potassium-40	-	-	-	-	-	-	[3]	(3)
Plutonium-238,-239/240	-	-	-	-	-	-	[3]	(3)
Technetium-99	-	-	-	-	-	-	[3]	(3)
Cesium-137	-	-	-	-	-	-	[4]	(4)
Ruthenium-106	-	-	-	-	-	-	[4]	(4)
Strontium-90	-	-	-	-	-	-	[4]	(4)
PRRS								
Benzene,Ethylbenzene,Toluene,Xylene	-	-	-	-	-	-	[5]	-
1,1,1-trichloroethane	-	-	-	-	-	-	[5]	-
1,1-dichloroethane	-	-	-	-	-	-	[5]	-
1,2-dichloroethane	-	-	-	-	-	-	[5]	-
As,Na,K,Ammonia,Phosphates&Sulfates	-	-	-	-	-	-	[5]	-

Notes:

( ) indicates Existing Sampling Point or Monitoring Parameter analyzed
[ ] indicates Proposed Sampling Point or Monitoring Parameter to be analyzed
A. The SSLS discharge (604) to Manhole 175 will be discontinued after Part 2 becomes operational
B. Parameters monitored only when discharging
~~C. See Table 1 for Outfall Locations~~
1. Continuously monitored
2. Grab Sample taken 1/Week
3. 24 Hour Composite sampled 1/Week
4. 24 Hour Composite sampled 1/Day
5. Grab Sample taken 1/Day

Outfall Number	Location
(604)	Storm Sewer Lift Station Discharge
(605)	Biodenitrification - Effluent Treatment System Effluent
(606)	SWRB Pump Station Discharge
[607]	IAWWT (SWRB) Effluent
[608]	proposed Emergency Bypass
(001)	Manhole 175
[003]	SWRB Valve house
[004]	proposed Manhole 183B

Attachment I

SOIL AND RUBBLE SAMPLING AND ANALYSIS PLAN
FOR THE
SOUTH GROUNDWATER CONTAMINATION PLUME REMOVAL ACTION

PART 2 - PUMP AND DISCHARGE SYSTEM
AND
PART 3 - INTERIM ADVANCED WASTEWATER TREATMENT SYSTEM

REVISION 3
October, 1992

FERNALD ENVIRONMENTAL MANAGEMENT PROJECT

1.0 Introduction

Field screening and sampling will be conducted to support the South Groundwater Contamination Plume Removal Action and is designed to achieve the following objectives:

- Characterize soil to detect the presence of any HSL or radiological constituents in the soils to be excavated.
- Monitor airborne radiological particulate concentrations during excavation and stockpiling operations in order to facilitate worker health and safety.
- Complete a hazardous waste determination for waste materials generated as a result of construction activities associated with the removal action.

To achieve these sampling objectives, field screening and sampling will be conducted. Samples are proposed to be collected prior to and during construction, and if deemed necessary, after the construction phase of the Removal Action.

Pre-excavation field screening, soil sampling, and analysis is proposed to identify contaminants in areas where personnel may be exposed to hazardous substances during construction activities, so that appropriate health and safety measures can be taken to protect the workers. The data will also be available to aid in the characterization of soils in the South Plume area for future remediation activities and in the waste characterization of excess excavated soils.

The work to be performed, as described in this plan, will be accomplished in accordance with the Health and Safety Plan for the South Groundwater contamination Plume Removal Action, Part 2 and Part 3.

2.0 Background

Based on historical records, there are five suspect areas of contamination identified within the area to be affected by Part 2 and Part 3 of the removal action (see Figure I-1). The areas are as follows:

- The area comprised of the monitoring and recovery well locations. This location is suspect as a result of the elevated concentrations of radiological substances in the regional aquifer which will be disturbed during drilling operations.
- The area between the Inactive Fly Ash Pile/South Field Area and the active Fly Ash Pile beginning at the location of the South Construction Road from the West Perimeter Road extending south to and including the Storm Sewer Outfall Ditch (SSOD). This area is considered suspect as a

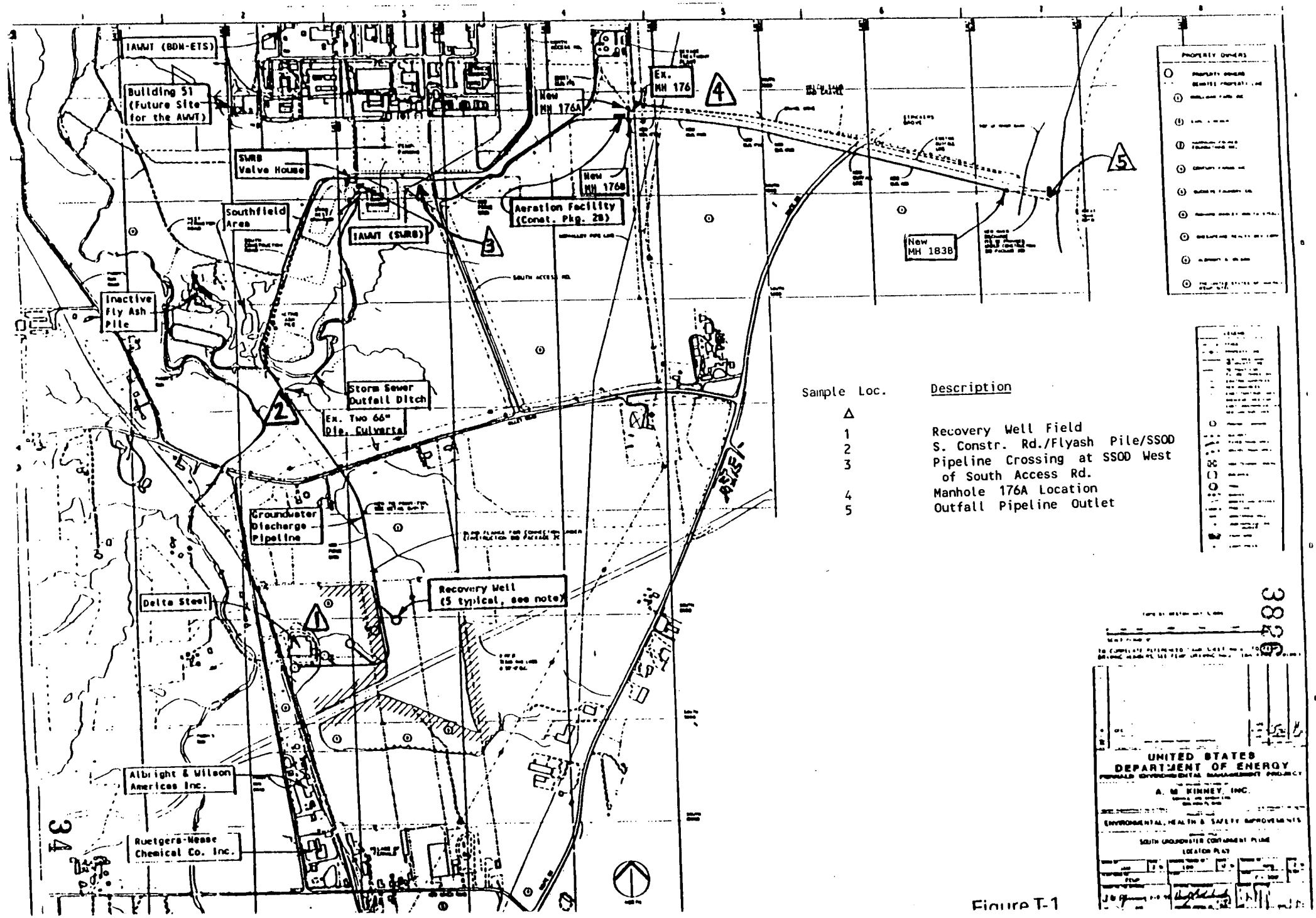
IAWWT (BDN-ETS)
Building 51 (Future Site for the AWWT)
SWRB Valve House
Southfield Area
IAWWT (SWRB)
Inactive Fly Ash Pile
Storm Sewer Outfall Ditch
Ex. Two 66" Dia. Culverts
Groundwater Discharge Pipeline
Delta Steel
Recovery Well (5 typical, see note)
Albright & Wilson Americas Inc.
Ruetgers-Nease Chemical Co. Inc.
New MH 176A
Ex. MH 176
New MH 176B
Aeration Facility (Const. Pkg. 28)
New MH 183B
Sample Loc.
Description
1 Recovery Well Field
2 S. Constr. Rd./Flyash Pile/SSOD
3 Pipeline Crossing at SSOD West of South Access Rd.
4 Manhole 176A Location
5 Outfall Pipeline Outlet
UNITED STATES DEPARTMENT OF ENERGY
A. M. KINNEY, INC.
ENVIRONMENTAL, HEALTH & SAFETY IMPROVEMENTS
SOUTH UNIONTOWN CONTAINMENT PLUME
LOCATION PLAN

Figure T-1

result of its location adjacent to the Fly Ash Piles/South Field Area which are currently being investigated under Operable Unit 2 of the Remedial Investigation/Feasibility Study (RI/FS), and the crossing of the SSOD, which is being investigated as part of Operable Unit 5.

- The groundwater discharge pipeline crossing at the SSOD just west of the South Access Road to the FEMP. This location is considered suspect due to a portion of the former FEMP Production Area that drains to the SSOD.

- The new outfall pipeline from the proposed diversion manhole, Manhole 176A, at the existing outfall pipeline downstream of Manhole 175, to proposed Manhole 176B. This area is considered suspect due to its close proximity to the existing outfall pipeline and sewage treatment plant.

- The area at the new outfall pipeline outlet to the Great Miami River. This area is considered suspect due to its proximity to the existing outfall pipeline outlet.

3.0 Pre-Excavation Field Screening & Soil Sampling and Analysis

3.1 Field Screening

The centerline of the pipeline easement is assumed to represent the centerline for the pipeline trench excavation. Sample point locations will be established along the pipeline easement centerline as follows: 1) at 500-foot intervals within the non-suspect areas, 2) at 100-foot intervals within the suspect areas, and 3) discrete locations as shown and described in Figure I-1. Soil samples for field screening will be collected, using a stainless steel auger, at one-foot intervals from the ground surface to the approximate depth at which the pipeline will be installed, at each sample point location described previously. Each soil sample will be field-screened for qualitative determinations of volatile organic and radiological contaminant concentrations.

Field screening will be performed as follows: A portion of each soil sample will be retained in clean glass jars sealed with aluminum foil lids for field screening of volatile organic compounds using a photoionization detector (PID) or a flame-ionization detector (FID). This will be accomplished by placing the soil material in the jar at a capacity of approximately one-half of the bottle volume. A piece of aluminum foil is placed over the mouth of the bottle. The bottle lid is gently emplaced over the aluminum foil to ensure that the aluminum foil is not punctured. The soil samples will be retained at 60-80 degrees Fahrenheit for a period of 15 minutes for volatilization of the organic compounds prior to PID or FID measurement. Subsequent to equilibrium of the volatile compounds in the bottle headspace, the bottle lid is removed and the probe of the PID device is inserted through the aluminum sheet to evacuate the headspace contents. This procedure will remain consistent for all samples to be field screened.

The organic criteria for sampling and analysis is based on the PID/FID readings. If the PID/FID readings are greater than five meter units above background, then a separate sample will be sent to the laboratory for analysis per Section 3.2. Also, if physical evidence such as odor, color, or oily sheen show that contamination may exist, a sample will be collected and analyzed.

The radiological screen for sampling and analysis is based on alpha, beta, and gamma readings. If there are detectable alpha readings or beta/gamma readings of greater than 100 counts per minute (cpm) above background, then a sample will be collected and sent to the laboratory for analysis per Section 3.2.

3.2 Sample Collection and Analysis

If field screening as described in Section 3.1 indicates the need to submit a sample for analysis then the following steps will be taken to obtain a sample. A maximum of one sample per location will be sent to the laboratory for analysis. If screening levels of organic or radiological parameters exceed the above criteria at several depths at one location, a separate sample will be collected at the depth that exhibits the highest readings.

In suspect areas, a minimum of one sample will be analyzed for HSLs and Total Radiological Parameters, regardless of field screening results. Also, several samples from non-suspect areas will be analyzed for potential pesticide/herbicide contamination.

Following is a list of parameters for laboratory analyses, if warranted by field screening. Attachment I-1 is a complete list of constituents in each category and the SW 846 test methods that will be followed.

Non-Suspect Areas

TCLP Volatiles - all analytes for this category.
TCLP Semi-Volatiles - all analytes for this category.
TCLP Total Pesticides/Herbicides - all analytes for this category.
TCLP Total Metals - all TC listed metals.
Total Radiological Parameters - all analytes listed for this category.

Suspect Areas

HSL Volatiles - all analytes listed for this category.
HSL Semi-Volatiles - all analytes listed for this category.
HSL Inorganics - all analytes listed for this category.
HSL Pesticides/PCBs - all analytes listed for this category.
Total Radiological Parameters - all analytes listed for this category.

Analytical data to be used for evaluation of worker health and safety will be obtained in the most expedient manner possible (i.e., would not require full CLP sampling/analytical protocols). HSL sampling and analyses for characterization

of soils not associated with worker health and safety will be done in accordance with the RI/FS QAPP level IV data quality objectives. Samples taken and analyzed for TCLP constituents to determine if the soil contains a hazardous waste will be analyzed in accordance with the RI/FS QAPP level III data quality objectives.

Trip and rinsate blanks will be collected for Quality Assurance/Quality Control (QA/QC) purposes. Trip and rinsate blanks will accompany each set of samples shipped to the appropriate designated laboratory. Duplicate soil samples, rinsate, and trip blanks will be taken at a frequency of one for every ten samples, or for each sampling event, whichever is more frequent. The QA/QC and duplicate samples will be analyzed for the respective analytes previously mentioned.

Excess soil boring cuttings will be returned to their respective sample point location borehole in non-suspect areas. The remainder of the borehole will be backfilled with bentonite slurry using a tremie pipe. Boreholes in suspect areas will be backfilled with bentonite slurry only. The location of the boreholes will be noted and correlated with the sample ID.

4.0 Construction-Related Activities

4.1 Project Specific Zones of Contamination

For the purposes of soil management during excavation activities and to ensure the proper disposition of waste and excess soils at the conclusion of construction, fourteen (14) Project Specific Zones of Contamination will be created. The zones have been selected based principally on keeping the five suspect areas excess soils separate from the non-suspect areas excess soils. These zones have been set based on process knowledge, field screening, the limits of the various construction contracts, and physical barrier divides (road crossings, crossing of FEMP property line, etc.). The Project Specific Zones of Contamination are delineated in Table 1. The fourteen zones will be used as a basis for establishing new Areas of Contamination if warranted.

All the excavated material within each zone will be segregated from the excavated material within the other zones. The soil excavated within each Project Specific Zone of Contamination, besides being kept separate from the soils excavated in other zones, will also be field screened and further subdivided based on the results. The soils will be subdivided into radiologically contaminated, organically contaminated, or "clean" soil piles as discussed below.

4.1.1 Potential Radiologically Contaminated Soils

During excavation, portable instruments will be used to survey the soils for radiological contaminants. Any soils with potentially radioactive contamination present, greater than 100 cpm above background, as measured on a Geiger-Mueller probe, will be separated from soils with readings below 100 cpm. The segregated potentially radiologically contaminated soil will be stockpiled within the Project Specific Zones of Contamination until a further evaluation of the stockpiles is performed in accordance with Section 4.2.

Project Specific Zones of Contamination

For Part 2 of the South Groundwater Contamination Plume Removal Action

Zone	Limits	Station Limits (1)	Suspected FEMP Contamination	Note
1	Construction Package 2C and 2D monitoring wells, piezometers, test well, and recovery well borings	NA	Uranium	(1)
2	Construction Package 2C excluding soils included in Zone 1	Beginning of work 32+25	None	
3	Construction Package 2A South of Willey Road	32+25 to 43+25	None	
3A or 4A	Boring under Willey Road	NA	None	(2)
4	Construction Package 2A North of Willey Road to south edge of Storm Sewer Outfall Ditch Excavation	43+25 to 52+00	None	
5	Limits of excavation required to install the new box culvert	52+00 to 53+00	Uranium	
6	North side of Storm Sewer Outfall Ditch excavation to the intersections of the South Construction Road and the West Perimeter Road	53+00 to 64+00	Uranium/Heavy Metals	
7	West Perimeter Road to north edge of Storm Sewer Outfall Ditch excavation (just west of the South Access Road to the FEMP)	64+00 to 83+50	None	

(1) Station limits shown are approximate. See construction drawings for exact locations.

(2) Soil from boring will be included with soils from whichever side of road on which boring machine is located

Project Specific Zones of Contamination

For Part 2 of the South Groundwater Contamination Plume Removal Action

Zone	Limits	Station Limits (1)	Suspected FEMP Contamination	Note
8	Limits of excavation required to install the new Pipe Arch	83+50 to 83+75	Uranium	
9	South edge of Storm Sewer Outfall Ditch excavation to property line	83+75 to 106+00	None	
10	Construction Package 2B2	NA	None	
11	North edge of mainline excavation to and including tie-in to existing Outfall Line at Manhole 176A	NA	Uranium	
12	FEMP property line to State Route 128	106+00 to 127+00	None	
12A or 13A	Boring under State Route 128	NA	None	(2)
13	State Route 128 to Manhole 183B (Sta. 143+00)	127+00 to 143+00	None	
14	Manhole 183B to Great Miami River	143+00 to End of Work	Uranium	

(1) Station limits shown are approximate. See construction drawings for exact locations.

(2) Soil from boring will be included with soils from whichever side of road on which boring machine is located.

Each soil stockpile will be managed, at a minimum, by placing a heavy, non-permeable tarpaulin on the ground in the area in which the soil will be stockpiled. The perimeter of the tarpaulin will be fastened to the ground by stakes or other appropriate means. Soil will be piled radially from the center of the tarpaulin, with a maximum lateral extent to no less than 3 feet from the edge of the tarpaulin. Each soil stockpile will be completely covered, on a daily basis, using a heavy, non-permeable tarpaulin. The tarpaulin cover will be weighted at its perimeter and intermittently over its surface area to avoid disturbance by wind. In order to allow for drainage of runoff away from the soil stockpiles, areas with the greatest relative elevation will be selected for soil stockpile sites.

Stockpiles of potentially radiologically contaminated soils off FEMP property (zones 1,2,3,12,13,14), will only be allowed to remain on a temporary basis within these zones. Stockpiles in these areas will be transported back to FEMP property and stockpiled by zone in a similar manner as described above. The material will be transported using a tarpaulin covered truck. The trucks will travel within easement areas or alongside and parallel to the pipeline easements. Crossing of public roads will only be utilized where absolutely necessary.

4.1.2 Potential Organically Contaminated Soils

During excavation, portable instruments will also be used to survey the soils for organic vapors. Any soils exhibiting measurable organic vapor readings, with or without radiological contamination, will be deemed potential organically contaminated material, placed in a box, and brought back to the FEMP site to be evaluated in accordance with Section 4.2.

4.1.3 "Clean" Soils

Any excavated material which is deemed to have less than 100 cpm and exhibits no measurable organic vapor readings will be regarded as "clean" soil. Any materials which are regarded as "clean" during excavation and are from a zone where no FEMP contaminants are expected (see Table 1) will be used as backfill within that zone, or any Project Specific Zone of Contamination where a deficiency in backfill exist. Any excess soil from "clean" zones will be placed in an existing "clean" stockpile located south of the west chamber of the Stormwater Retention Basin at the FEMP site.

All stockpiled "clean" soils located within suspect contaminant zones (zones 1,5,6,8,11,14) will be used as backfill within that zone. Any excess stockpiles within these zones will be removed and transported to FEMP property for a RCRA and radiological determination to be made. Further sampling will be done to characterize the soil as clean or contaminated in accordance with Section 4.2. After sampling, the excess soil stockpiles waiting results from the sampling will be managed to prevent fugitive dust emissions by completely covering the material with a heavy, non-permeable tarpaulin. The tarpaulin cover will be weighted at its perimeter and intermittently over its surface area to avoid disturbance by wind.

4.2 Evaluation of Stockpiled and Containerized Soils

Potentially contaminated boxed or stockpiled materials located on FEMP property, as well as "clean" stockpiles in suspect contaminant areas, will be deemed either radiologically contaminated, organically contaminated, or clean based on the evaluation of process knowledge, pre-excavation soil sampling and analysis results, and field screening during excavation. In the event that this data is insufficient for proper characterization and disposition, additional representative sampling of the individual stockpiles and containers will be performed. Final disposition will be determined once the RCRA hazardous waste and radiological characterization is made. All stockpiled soils will remain segregated by the appropriate Project Specific Zone of Contamination until this determination is made.

4.3 Other Material Monitoring

Other material (i.e. metal, plastic, etc.) in which surface contamination limits apply will be surveyed with a GM probe. Items exceeding free release criteria will be containerized and managed as low level radioactive waste.

4.4 Monitoring for Airborne Radiological Particulate Concentrations

Monitoring and controls to protect worker health and safety shall be performed in accordance with the Health and Safety Plan for the South Groundwater Contamination Plume Removal Action, Part 2 and Part 3.

5.0 Post-Excavation Soil Management and Disposition

5.1 Buildover Criteria

Specific buildover criteria are not proposed to be applied to construction activities associated with this removal action. The FEMP considers that the pipeline and associated appurtenances do not provide a significant impediment to future remedial activities. The FEMP recognizes that actions may be required during final remediation to address elevated concentrations of HSLs or radionuclides identified during the course of the Remedial Investigation. These actions may include focused excavations under or adjacent to the pipeline. In the event that elevated concentrations are encountered within a Project Specific Zone of Contamination during construction of this removal action, construction will be continued until completion in agreement with above. However, a Removal Site Evaluation (RSE) will be prepared for that zone to assess the potential hazard to human health and the environment and to determine if a removal action is required, or if the material can remain in place until final remediation occurs.

5.3 Disposition of Soil Stockpiles and Containerized Materials

The disposal requirements for the containerized material and each soil stockpile will be evaluated separately. The RCRA hazardous waste and radiological

determinations will be based on the evaluation performed in Section 4.2. The disposition of each soil stockpile and any containerized material will be managed in accordance with FEMP procedures as follows:

- Excess soils from on and off FEMP property determined to be radiologically uncontaminated and not containing a hazardous waste will be available for use as outlined in this plan.

The following apply to soils from both on and off FEMP property:

- Soils determined to be radiologically contaminated, with > 100 pCi/g uranium or > 50 pCi/g natural thorium or > 5 pCi/g radium and determined not to contain a RCRA hazardous waste, will be at a minimum placed in a designated controlled FEMP stockpile and placed on and under tarpaulins. Identification of other radionuclides will be managed on a case-by-case basis.

- Soils determined to be radiologically contaminated, with > 100 pCi/g uranium or > 50 pCi/g natural thorium or > 5 pCi/g radium and contain a RCRA hazardous waste shall be containerized, transported to FEMP property to be stored and managed as mixed waste.

- Soils determined to contain RCRA hazardous waste only shall be containerized, and transported to FEMP property to be stored and managed as a RCRA hazardous waste.

Attachment I-1

Categories of Analytical Constituents

SOIL AND RUBBLE SAMPLING AND ANALYSIS PLAN
for the
SOUTH GROUNDWATER CONTAMINATION PLUME REMOVAL ACTION

PART 2 - PUMP AND DISCHARGE SYSTEM
and
PART 3 - INTERIM ADVANCED WASTEWATER TREATMENT SYSTEM

FERNALD ENVIRONMENTAL MANAGEMENT PROJECT

HSL Volatiles

Volatile	CAS Number	Detection Limits Low Water[a] ug/L	Low Soil/Sediment[b] ug/L
1. Chloromethane	74-87-3	10	10
2. Bromomethane	74-83-9	10	10
3. Vinyl Chloride	75-01-4	10	10
4. Chloroethane	75-00-3	10	10
5. Methylene Chloride	75-09-2	5	5
6. Acetone	67-64-1	10	10
7. Carbon Disulfide	75-15-0	5	5
8. 1,1-Dichloroethene	75-35-4	5	5
9. 1,1-Dichloroethane	75-35-3	5	5
10. trans-1,2-Dichloroethene	156-60-5	5	5
11. Chloroform	67-66-3	5	5
12. 1,2-Dichloroethane	107-06-2	5	5
13. 2-Butanone	78-93-3	10	10
14. 1,1,1-Trichloroethane	71-55-6	5	5
15. Carbon Tetrachloride	56-23-5	5	5
16. Vinyl Acetate	108-05-4	10	10
17. Bromodichloromethane	75-27-4	5	5
18. 1,1,2,2-Trichloroethane	79-34-5	5	5
19. 1,2-Dichloropropane	78-87-5	5	5
20. trans-1,3-Dichloropropene	10061-02-6	5	5
21. Trichloroethene	79-01-6	5	5
22. Dibromochloromethane	124-48-1	5	5
23. 1,1,2-Trichloroethane	79-00-5	5	5
24. Benzene	71-43-2	5	5
25. cis-1,3-Dichloropropene	10061-01-5	5	5
26. 2-Chloroethyl Vinyl Ether	110-75-8	10	10
27. Bromoform	75-25-2	5	5
28. 2-Hexanone	591-78-6	10	10
29. 4-Methyl-2-pentanone	108-10-1	10	10
30. Tetrachloroethene	127-18-4	5	5
31. Toluene	108-88-3	5	5
32. Chlorobenzene	108-90-7	5	5
33. Ethyl Benzene	100-41-4	5	5
34. Styrene	100-42-5	5	5
35. Total Xylenes		5	5

[a]Medium Water Contract Required Detection Limits (CRDL) for Volatile HSL Compounds are 100 times the individual Low Water CRDL.

[b]Medium Soil/Sediments Contract Required Detection Limits (CRDL) for Volatile HSL Compounds are 100 times the individual Low Soil/Sediment CRDL

HSL Semi-Volatiles

Semi-Volatile	CAS Number	Detection Limits Low Water[a] ug/L	Low Soil/Sediment[a] ug/Kg
36. Phenol	104-95-2	10	330
37. bis(2-Chloroethyl) ether	111-44-4	10	330
38. 2-Chlorophenol	95-57-6	10	330
39. 1,3-Dichlorobenzane	541-73-1	10	330
40. 1,4-Dichlorobenzene	104-44-7	10	330
41. Benzyl Alcohol	100-51-6	10	330
42. 1,2-Dichlorobenzene	95-50-1	10	330
43. 2-Methylphenol	95-48-7	10	330
44. bis(2-Chloroisopropyl) ether	39638-32-9	10	330
45. 4-Nethylphenol	104-44-5	10	330
46. H-Kitroso-Dipropylamine	621-64-7	10	330
47. Hexachloroethane	67-72-1	10	330
48. Nirtobenzene	98-95-3	10	330
49. Isophorone	78-59-1	10	330
50. 2-Kitrophenol	88-75-5	10	330
51. 2,4-Dimethylphenol	105-67-9	10	330
52. Benzoic Acid	65-85-0	50	1600
53. bis(2-Chloroethoxyl) methane	111-91-1	10	330
54. 2,4-Dichlorophenol	120-63-2	10	330
55. 1,2,4-Trichlorobenzene	120-62-1	10	330
56. Naphthalene	91-20-3	10	330
57. 4-Chloroaniline	106-47-8	10	330
58. Hexachlorobutadiene	87-68-3	10	330
59. 4-Chloro-3-methyphenol (para-chloro-meta-cresel)	59-50-7	10	330
60. 2-Methylnaphthalene	91-57-6	10	330
61. Hexachlorocyclopentadiene	77-47-4	10	330
62. 2,4,6-Trichlorophenol	88-06-2	10	330
63. 2,4,5-Trichlorophenol	95-95-4	50	1600
64. 2-Chloronaphthalene	91-58-7	10	330
65. 2-Nitaniline	88-74-4	50	1600
66. Dimethyl Phthalate	131-11-3	10	330
67. Acenaphthylene	208-96-8	10	330
68. 3-Nitroaniline	99-09-2	50	1600
69. Acenapthene	83-32-8	10	330
70. 2,4-Disitrophenol	51-28-5	50	1600
71. 4-Nitrophenol	100-02-7	50	1600
72. Dibenzofuras	132-64-9	10	330

73. 2,4-Dimitrotoluene	121-14-2	10	330
74. 2,6-Dinitrotoluene	606-20-2	10	330
75. Diethylphthalate	84-66-2	10	330
76. 4-Chlorophenyl Phenyl ether	7005-72-3	10	330
77. Fluorene	86-73-7	10	330
78. 4-Nitroaniline	100-01-6	50	1600
79. 4,6-Dinitro-2-methylphenol	534-52-1	50	1600
80. H-nitrosodiphenylamine	86-30-6	10	330
81. 4-Bromophenyl Phenyl ether	101-55-3	10	330
82. Hexachlorobenzene	118-74-1	10	330
83. Pentachlorophenol	87-86-5	60	1600
84. Phenanthrene	85-01-6	10	330
85. Anthracene	120-12-7	10	330
86. Di-n-butylphthalate	84-74-2	10	330
87. Fluoranthene	206-44-0	10	330
88. Pyrene	129-00-0	10	330
89. Butyl Benzyl Phthalate	85-68-7	10	330
90. 3,3-Dichlorobenzidine	91-94-1	20	660
91. Benzo(a)anthracene	56-55-3	10	330
92. bis(2-ethylheyl)phthalate	117-81-7	10	330
93. Chrysene	218-01-9	10	330
94. Di-n-cotyl Phthalate	117-84-0	10	330
95. Benzo(b)fluoranthene	205-99-2	10	330
96. Benzo(k)fluoranthene	207-08-9	10	330
97. Benzo(a)pyrene	50-32-8	10	330
98. Indeno(1,2,3-cd)pyrene	193-39-5	10	330
99. Dibenz(a,h)anthracene	53-70-3	10	330
100. Benzo(g,h,i)perylene	191-24-2	10	330

[c]Medium Water Contract Required Detection Limits (CRDL) for Volatile HSL Compounds are 100 times the individual Low Water CRDL.

[d]Medium Soil/Sediments Contract Required Detection Limits (CRDL) for Volatile HSL Compounds are 100 times the individual Low Soil/Sediment CRDL

HSL Pesticides

Pesticides	CAS Number	Detection Limits Low Water[e] ug/L	Low Soil/Sediment[f] ug/Kg
101. alpha-BHC	319-84-6	0.05	8.0
102. beta-BHC	319-85-7	0.05	8.0
103. delta-BHC	319-86-8	0.05	8.0
104. gamma-BHC (Lindane)	58-89-9	0.05	8.0
105. Heptachlor	76-44-8	0.05	8.0
106. Aldrin	309-00-2	0.05	8.0
107. Heptachlor Epoxide	1024-57-3	0.05	8.0
108. Endosulfan I	959-98-8	0.05	8.0
109. Dieldrin	60-57-1	0.10	16.0
110. 4,4'-DDE	72-55-9	0.10	16.0
111. Endrin	72-20-8	0.10	16.0
112. Endosulfan II	33213-65-9	0.10	16.0
113. 4,4'-DDD	72-54-8	0.10	16.0
114. Endosulfan Sulfate	1031-07-8	0.10	16.0
115. 4,4'-DDT	50-29-3	0.10	16.0
116. Endrin Ketone	53494-70-5	0.10	16.0
117. Methoxychlor	72-43-5	0.5	80.0
118. Chlordane	57-74-9	0.5	80.0
119. Toxaphene	8001-35-2	1.0	160.0
120. AROCLOR-1016	12674-11-2	0.5	80.0
121. AROCLOR-1221	11104-28-2	0.5	80.0
122. AROCLOR-1232	11141-16-5	0.5	80.0
123. AROCLOR-1242	53469-21-9	0.5	80.0
124. AROCLOR-1248	12672-29-6	0.5	80.0
125. AROCLOR-1254	11097-69-1	1.0	160.0
126. AROCLOR-1260	11096-82-5	1.0	160.0

[e]Medium Water Contract Required Detection Limits (CRDL) for Pesticide HSL Compounds are 100 times the individual Low Water CRDL.

[f]Medium Soil/Sediment Contract Required Detection Limits (CRDL) for Pesticide HSL compounds are 15 times the individual Low Soil/Sediment CRDL.

[g]Detection limits listed for soil/sediment are based on wet weight. The detection limits calculated by the laboratory for soil/sediment, calculated on dry weight basis, as required by the contract, will be higher.

HSL INORGANICS

Analyte	Contract Required Detection Limit (ug/L)
Aluminum	200
Antimony	60
Arsenic	10
Barium	200
Beryllium	5
Cadmium	5
Calcium	5000
Chromium	10
Cobalt	50
Copper	25
Cyanide	10
Iron	100
Lead	5
Magnesium	5000
Manganese	15
Mercury	0.2
Nickel	40
Potassium	5000
Selenium	5
Silver	10
Sodium	5000
Thallium	10
Vanadium	50
Zinc	20

ANALYSIS REQUESTS

NOTE: THE METHOD NUMBERS THAT ARE LISTED ARE ONLY SUGGESTED METHODS FOR SW-846 ANALYSES.

Full TCLP (1311)

Metals
Arsenic (7060)
Barium (6010)
Cadmium (6010)
Chromium (6010)
Lead (6010)
Mercury (7470)
Selenium (7740)
Silver (6010)

Semi-Volatiles (8270)
1,4-Dichlorobenzene
2,4-Dinitroluene
Hexachlorobenzene
Hexachloroethane
Hexachloro-1,3-butadiene
Nitrobenzene
Pentachlorophenol
Pyridine
2,4,5-Trichlorophenol
2,4,6-Trichlorophenol
O-Cresol
m-Cresol
p-Cresol

Volatiles (8240)
Benzene
Carbon Tetrachloride
Chlorobenzene
Chloroform
2-Butane
1,2-Dichloroethane
1,1-Dichloroethylene
Tetrachloroethylene
Trichlotoethylene
Vinyl Chloride

Pesticides (8080)
Chlordane
Endrin
Heptachlor
Heptachlor Epoxide
Lindane
Methoxychlor
Toxaphene

Herbicides (8150)
2,4-D
2,4,5-TP (Silvex)

TCLP Metals (1311)

Arsenic (6010)
Barium (6010)
Cadmium (6010)
Chromium (6010)
Lead (6010)
Mercury (7470)
Selenium (6010)
Silver (6010)

Total Metals

Arsenic (6010)
Barium (6010)
Cadmium (6010)
Chromium (6010)
Lead (6010)
Mercury (7470)
Selenium (6010)
Silver (6010)

TCLP Volatile Organic Analysis (1311, 8240)

1,1-Dichloroethylene
1,2-Dichloroethane
2-Butane
Benzene
Carbon Tetrachloride
Chlorobenzene
Chloroform
Tetrachloeothylene
Trichloroethylene
Vinyl Chloride

Total Volatile Organic Analysis (8240)

1,1,1-Trichloroethane
1,1,2-Trichloro-
  1,2,2-trifluoroethane
1,1,2-Trichloroethane
Acetone
Benzene
Carbon Tetrachloride
Carbon Disulfide
Chlorobenzene
Cyclohexanone
Ethyl Acetate
Ethyl Benzene
Ethyl Ether
Methyl Ethyl Ketone
Methyl Isobutyl Ketone
Methylene Chloride
Tetrachloroethylene
Toluene
Total Xylenes
Trichloeothylene
Trichlorofluoro-
  methane

Total Alcohols (8015)

2-Ethoxy ethanol
Isobutanol
Methanol
n-Butyl alcohol

TCLP Semi-Volatiles (1311, 8270)

1,4-Dichlorobenzene
2,4-Dinitrotoluene
2,4,5-Trichlorophenol
2,4,6-Trichlorophenol
Hexachloro-1,3-butadiene
Hexachlorobenzene
Hexachloroethane
m-Cresol
Nitrobenzene
O-Cresol
p-Cresol
Pentachlorophenol
Pyridine

Total Semi-Volatiles (8270)

1,4-Dichlorobenzene
2,4-Dinitrotoluene
2,4,5-Trichlorophenol
2,4,6-Trichlorophenol
Hexachloro-1,3-butadiene
Hexachlorobenzene
Hexachloroethane
m-Cresol
Nitrobenzene
O-Cresol
p-Cresol
Pentachlorophenol
Pydidine

TCLP Pestidides (1311,8080)

Chlordane
Endrin
Heptachlor
Heptachlor Epoxide
Lindane
Methoxychlor
Toxaphene

Total Pesticides (8080)

Chlordane
Endrin
Heptachlor
Heptachlor Epoxide
Lindane
Methoxychlor
Toxaphene

Total Herbicides (8150)

2,4-D 2,4,5-TP (Silvex)

RADIONUCLIDES

U-233,234,235,236,238

Ra-226,228

Th-228,230,232

Th-234

Pu-238,239,Total Pu

Np-237

Tc-99

Cs-137

Potassium-40

Alpha, beta, gamma
Semi-quant, ID

ATTACHMENT II

PERMIT INFORMATION SUMMARY

FOR THE

SOUTH GROUNDWATER CONTAMINATION PLUME REMOVAL ACTION

PART 2 - PUMPING AND DISCHARGE SYSTEM

AND

PART 3 - INTERIM ADVANCED WASTEWATER TREATMENT SYSTEM

FERNALD ENVIRONMENTAL MANAGEMENT PROJECT

Introduction

This Permit Information Summary for Part 2 and Part 3 of the South Groundwater Contamination Plume Removal Action is provided pursuant to requirements of the Consent Agreement under the Comprehensive Environmental Response, Compensation and Liability Act (CERCLA) Section 120 and 106(a). Specifically, Section XIII, subparagraph B identifies three items of information pertaining to permits which would otherwise be required in the absence of provisions of Section 121(e)(1) of CERCLA and the NCP. The information required includes:

1. Required Permits

   Identification of each permit that would otherwise be required;

2. Criteria and Limitations

   Identification of the standards, requirements, criteria, or limitations that would have had to have been met to obtain each such permit; and

3. Response Action Compliance Plan

   Explanation of how the response action will meet the standards, requirements, criteria, or limitations identified in Item 2 above.

Required Permits

The permits which would otherwise be required for this Removal Action include:

A. Water Permit to Install (PTI) from Ohio EPA;

B. Air Permit to Operate (PTO) from Ohio EPA;

   Air Permit to Install (PTI) from Ohio EPA; and

   National Emissions Standards for Hazardous Air Pollutants (NESHAP)

A. Water PTI

Required Permit: Water PTI

Criteria and Limitations

An application for a water PTI is a requirement of Ohio Administrative Code (OAC) 3745-31-02, paragraph (a), Permits to Install. The DOE FEMP is providing an Interim Advanced Wastewater Treatment system (IAWWT) that will remove a mass of uranium from a portion of existing FEMP wastewater discharge that will exceed the mass of uranium added to the discharge as a result of pumping from the South Groundwater Contamination Plume. This is pursuant to the agreement set forth in the South Groundwater

Contamination Plume Engineering Evaluation/Cost Analysis (EE/CA). The implementation of planned Removal Actions from other Operable Units was also accounted in the design of the IAWWT system. As the result of the IAWWT system, the uranium loading to the Great Miami River will be decreased and will not exceed 1700 pounds. Because the construction of the IAWWT system will constitute a modification to the FEMP wastewater treatment system, the IAWWT system would require a wastewater PTI.

In addition, a water PTI would be required for the aeration facility. This facility is required to be installed to maintain NPDES permit compliance and to insure water quality for dissolved oxygen.

Finally, the construction of the new outfall pipeline would also require a water PTI.

Response Action Compliance Plan

A portion of the IAWWT system will be located at the Storm Water Retention Basin (SWRB) and will treat the combined SWRB and Storm Sewer Lift Station (SSLS) discharges. To provide additional flow to the IAWWT (SWRB), the SSLS discharge to Manhole 175 will be discontinued as a daily discharge and the flow allowed to pass through Manhole 34 to the SWRB. The discharge from the IAWWT (SWRB) will be discharged into the existing six inch diameter SWRB discharge forcemain which eventually flows into Manhole 175.

The remaining portion of the IAWWT system will be located at the Biodenitrification-Effluent Treatment System (BDN-ETS) building and will treat a nominal 100 gpm of the secondary effluent of the BDN-ETS before discharge. Uranium and alpha and beta radiation will be analyzed at the inlet and outlet of the IAWWT (SWRB) ~~and the IAWWT (BDN-ETS)~~ to assess its performance. The IAWWT system employs ion exchange technology which exceed the Best Available Technology (BAT) requirements for uranium removal.

The monitoring information for conventional pollutants shown in Table I for the IAWWT (SWRB) will be reported as NPDES proposed outfall 1I000004607 and for the IAWWT (BDN-ETS) as NPDES existing outfall 1I000004605.

The aeration facility will be installed to insure compliance with the applicable NPDES limitation to provide a final effluent discharge to the Great Miami River with a minimum of 5.0 mg/l dissolved oxygen concentration

B. Air PTI, Air PTO, and NESHAP

Required Permits: Air PTI, Air PTO, and NESHAP

Criteria and Limitations:

An application for an air PTO is a requirement of OAC 3745-35-02. The

Table 1 NPDES Monitoring Parameters

MONITORING PARAMETER	OUTFALL NUMBER							
	(604)[A]	(605)	(606)[A]	[607]	[608][B]	[004]	[003]	(001)
Residue, Total Nonfilterable	(3)	(3)	(4)	[3]			[3]	(3)
Flowrate	(1)	(1)	(1)	[1]	[1]		[1]	(1)
pH, SU Continuously Monitored				[1]			[1]	(1)
Oil and Grease, Total	(2)		(5)					(2)
Dissolved Oxygen						[2]		(2)
Carb. BOD_5		(3)						(3)
NO_3-N	(3)	(3)						(3)
NH_3-N		(3)						(3)
Total CN								(2)
Total Cr, Cu, Ni		(3)						(3)
Total: F	(3)							(3)
Total: Pb, Ag								(3)
Fe, Mn						[2]		
Cr, Dissolved Hexavalent		(3)						(3)

Notes:

( ) indicates Existing Sampling Point or Monitoring Parameter analyzed
[ ] indicates Proposed Sampling Point or Monitoring Parameter to be analyzed
A. The SSLS discharge (604) to Manhole 175 will be discontinued after Part 2 becomes operational
B. Parameters Monitored only when discharging

1. Continuously monitored
2. Grab Sample taken 1/Week
3. 24 Hour Composite sampled 1/Week
4. 24 Hour Composite sampled 1/Day
5. Grab Sample taken 1/Day

Outfall Number	Location
(604)	Storm Sewer Lift Station Discharge
(605)	Biodentrification - Effluent Treatment System Effluent
(606)	SWRB Pump Station Discharge
[607]	IAWWT (SWRB) Effluent
[608]	proposed Emergency ByPass
(001)	Manhole 175
[003]	SWRB Valve house
[004]	proposed Manhole 182B

IAWWT (SWRB) will include a sulfuric acid pH adjustment system. The pH system will have a concentrated sulfuric acid tote container (furnished by a manufacturer) and a 400 gallon capacity tank designated for dilution of the concentrated sulfuric acid with water from the SWRB. An application for an air PTO would be a requirement for the IAWWT (SWRB) acid storage tank regardless of its storage capacity. The pH of the IAWWT (BDN-ETS) influent is near neutral and therefore no pH adjustment/storage tank system is needed.

In addition, because the aeration facility near new Manhole 176B is a potential radionuclide source, an air PTI and an air PTO is required.

It is assumed that radionuclide emissions from the aeration tank will not cause effective dose equivalents in excess of those levels detailed in 40 CFR 61.96(b). Therefore, a NESHAP application will not be necessary.

Response Action Compliance Plan

The BAT for both the aeration tank in the aeration facility and the sulfuric acid storage tank would be limited to providing submerged fill.