R-021-202.1

3923

REMOVAL SITE EVALUATION PIT 5 EXPERIMENTAL TREATMENT FACILITY

06/12/91

DOE-FN/WEMCO
~~20~~ 25
RSE

[redacted]

3923

REMOVAL SITE EVALUATION

PIT 5 EXPERIMENTAL TREATMENT FACILITY

FEED MATERIALS PRODUCTION CENTER

U. S. DEPARTMENT OF ENERGY

FERNALD, OHIO

June 12, 1991

Introduction

The Feed Materials Production Center (FMPC) is a U.S. Department of Energy (DOE) uranium processing complex. The major features of the 1,050 acre site are shown on Figure 1. The production area comprises 136 acres and is adjacent to a waste storage area of approximately 65 acres as shown in Figure 2.

Since the early 1950s, various chemical and metallurgical processes have been used to manufacture uranium products. A substantial quantity and a variety of wastes have been generated. These wastes have been characterized as hazardous, toxic, and radioactive. Prior to 1985, solid wastes were transferred (by various means) for disposal in the pits and silos in the waste storage area. Since 1985, wastes have been processed and stored in drums for either future disposal or reprocessing. Currently, none of the waste pits receive waste material and four of the six have been back-filled and covered. Waste Pits No. 5 and No. 6 still remain uncovered.

Waste Pit No. 5 was constructed in 1968 and operated from 1968 to 1985. The pit was lined with a 60-mil thick Royal-Seal EPDM elastomeric membrane. This waste pit received liquid waste slurries from the refinery and the recovery plant, including neutralized raffinate, settled solids, slag-leach slurry, sump slurries, and lime-sludge. The waste volume consists of approximately 102,500 cu.yds., containing 50,309 kgs. of uranium and 17,000 kgs. of thorium.

In 1986 Roy F. Weston Inc. performed a Characterization Investigation Study of the Waste Storage Pits at the FMPC. Their study of Waste Pit No. 5 showed a thick sludge with 65% moisture content. The sludge was characterized and found to have uranium, radium, and thorium concentrations which require Pit 5 waste to be considered low level radioactive waste (LLRW). Additional information is presented in Table 1. Although EP Toxicity and TCLP testing has not shown the waste to be hazardous as defined under RCRA. Pit 5 is under evaluation as a hazardous waste management unit (HWMU) as a result of process knowledge and the potential of contact and mixing with other hazardous constituents. Other materials of importance in the pit include arsenic, organics, polychlorinated biphenyls (PCBs) etc.

In 1984 a project was approved to study alternate methods of drying residues for later storage in bulk facilities. This project was designed to minimize the rotary kiln processing requirements and involved the use of an Experimental Treatment Facility (ETF). The project was a combined effort between the FMPC Development and Production Technology departments.

The design of the ETF unit combined a sand/gravel filter bed for dewatering, covered by a greenhouse type structure for both thermal drying and protection from rainfall. The location of this facility is south of the access road between Pit Nos. 3 and 5, near the southwest corner of Pit No. 5. The ETF structure is completely above-ground and measures 20 ft. x 48 ft. The sand filter bed is housed within a 6 ft. high retaining wall at a depth of approximately 2.5 ft.

In November 1984 about 12,000 gallons of diluted Pit 5 sludge was pumped to the ETF, greenhouse/sand bed filter arrangement. An 80% reduction in volume was achieved using the sand bed filter and "solar" heating from the greenhouse (from 12,000 gallons of wet residue to

2,400 gallons of dry residue). Based on this data, it was estimated that 1,870 batches would be required in an ETF of present size to dry out all the residue contained in Pit 5.

On February 23, 1988, high winds (10-40 mph) blew the plastic roof off the ETF which still contained the dry Pit 5 material. A small amount of this material was blown out of the building and spread into the surrounding area. To minimize the spread of this material, water was sprayed over the remaining residue and a tarpaulin cover was then placed over the floor of the ETF (covering the material) and secured with weights. The subsequent Unusual Occurrence Report (WMCO:88-006) recommended that Waste Operations and Development prepare a plan for the safe removal and packaging of the Pit 5 dried residues, including a plan for the demolition of the building.

SOURCE TERM

On June 27, 1988, approximately four months after the Unusual Occurrence Report (WMCO:88-006) was filed, eleven subsurface soil samples were taken at five locations; for the specific sample locations and concentrations, see Figure 3. Analysis revealed that within the first twelve inches of soil, uranium concentrations ranged from 173 to 687 parts per million (ppm). The sample results show that the concentration of uranium diminishes quickly with increasing depth.

The dried sludge in the ETF currently remains partially covered by a tarpaulin held in place by randomly placed cinder blocks. Since the dried residue material is currently only covered with the tarp there still exists the potential for dispersal due to high winds. The quantification of the source term is essentially dependent on the knowledge of what was initially placed in Waste Pit 5. A listing of typical contaminants and the range of the concentrations is provided in Table 1.

EVALUATION OF THE MAGNITUDE OF THE POTENTIAL THREAT

The potential threat posed by the elevated uranium, radium, and thorium levels in the dried ETF residue is the exposure due to resuspension and migration of the contaminants through wind erosion. High winds are common to the area and are quite capable of displacing the tarpaulin and eroding the upper, more highly contaminated sludge residue layer. The residue in the ETF has an average uranium concentration of 228 pCi/g in the first ten inches, and a maximum observed value of 480 pCi/g. The airborne migration of the residue to previously uncontaminated areas could result in more extensive soil clean-up as part of the final remedial actions.

The concentrations of uranium present in the residues are considered to be low level. However, these concentrations are expected to be in excess of possible final remediation soil clean-up standards for the FMPC. Several recent remedial programs have adopted residual soil activity concentrations for final clean-up actions consistent with the 1981 NRC Branch Technical Position Paper ("Disposal vs. On-site Storage of Thorium and Uranium Wastes from Past Operations" Federal Register, Vol. 46, No. 205, Friday, October 23, 1981 p. 52061f.) of 35 pCi/g (approximately 50 ppm) for depleted uranium in soils.

Concern over the additional contaminants found in Waste Pit 5, and therefore in the ETF as well, is warranted given the fact that Table 1 shows high concentrations of thorium-230. Radium-226 is also observed to be concentrations in excess of 100 pCi/g. The major concerns from these radionuclides is due to the inhalation pathway for thorium and the direct external radiation exposure from radium. Additional data from the Weston study indicates that the maximum observed concentration of arsenic in the waste pit materials was 2,800 (mg/kg) or (ppm - parts per million). The levels of contaminants in dried waste material contained in the ETF and residing in the surface soil (as a result of the unusual occurrance mentioned previously) clearly identify a concern for both the release that has occurred and the potential for additional releases of the dried waste. To evaluate, in a quanitative fashion, the magnitude of the existing and potential threat posed by the material in the ETF a pathway analysis was performed.

The pathway analysis was performed using the maximum observed concentrations, for uranium, thorium, radium and arsenic. The maximum concentrations were then incorporated into three conservative exposure scenarios. The analysis and results are presented in Attachment I. In general there is a potentially significant risk to on-site workers who may be working in the area without respirators. The word potentially is emphasized since the analysis performed used ultra-conservative assumptions. In the present condition, there is little threat to the general public from a health standpoint. However, due to the potential mentioned above there exists sufficient concern to warrant a removal action. The pathway analysis for exposure scenario (2) assumed no internal exposure due to inhaled dust since protective clothing including respirators would be required. This assumption was constructed to take into account the potential for the removal activities to result in an increase in the risk. Proper controls and protection during any activities in the vicinity of the ETF will be directed to keep occupational and environmental exposure to a minimum.

The additional noncarcinogenic contaminants of concern, such as lead, calcium, iron, and aluminum, were not considered in the pathway analysis since the risks and doses resulting from the radionuclides and the arsenic were considered to be sufficient to evaluate the magnitude of the potential or actual threat.

In order to significantly reduce the potential threat of contaminant releases additional control measures are available as follows:

1. In the event that residues have dried to the point where dust production is possible, manual re-wetting will be performed.

2. As part of any activity in the vicinity of the ETF the disposition of any affected soil shall be in accordance with: radiological guidelines specified in Site Policy and Procedure #FMPC-720, "Control of Construction Waste;" the specific requirements noted within this RSE document; and site zoning procedures.

3. The management of excavated soils shall be in accordance with field radiological monitoring as the preliminary determining factor for radiological categorization of the soil.

4. All soils being relocated from this area shall be placed in metal waste boxes and located at an interim storage location pending RCRA determination analysis. The material shall be segregated by categories as defined in FMPC Site Policy #720 as it is placed into the metal waste boxes to facilitate proper dispositioning upon receipt of the RCRA determination.

5. Dispositioning/handling of the contaminated soil shall be performed during non-peak personnel traffic times, and/or by using an appropriate personnel detour-route away from the area.

6. Good housekeeping rules and appropriate Health and Safety measures will be maintained at the excavation site.

ASSESSMENT OF THE NEED FOR REMOVAL ACTION

Consistent with section 40 CFR 300.410 of the National Contingency Plan, the Department of Energy (DOE) shall determine the appropriateness of a removal action. Eight factors to be considered in this determination are listed in 40 CFR 300.415 (b)(2). The following apply specifically to the concentrations of total uranium, radium, thorium, and arsenic occurring in the ETF's dried Pit 5 sludge:

40 CFR 300.415 (b)(2)(i)

Actual or potential exposure to hazardous substances or pollutants or contaminants of nearby populations, animals or food chain.

40 CFR 300.415(b)(2)(iv)

High levels of hazardous substances or pollutants or contaminants in soils largely at or near the surface that may migrate.

40 CFR 300.415 (b)(2)(v)

Weather conditions that may cause hazardous substances or pollutants or contaminants to migrate or be released.

These factors are considered appropriate as a result of the concentration of uranium, radium, thorium, and arsenic in the dried sludge residue. Operational activities, inclement weather, and over environmental factors have a potential to cause these contaminants to migrate or be carried to areas which are either presently uncontaminated or are contaminated to a lesser extent.

APPROPRIATENESS OF A RESPONSE

If it is determined that a response action is appropriate due to both the levels of contamination in the ETF and the potential threat associated with additional releases and the spread of contaminants a removal action may be required to address the existing situation. The ETF is not routinely monitored thereby constituting an uncontrolled situation with respect to the threat associated with the continued migration of contaminants.

If a planning period of less than six months exists prior to initiation of a response action, DOE will issue an Action Memorandum. The Action Memorandum will describe the selected response and provide supporting documentation for the decision.

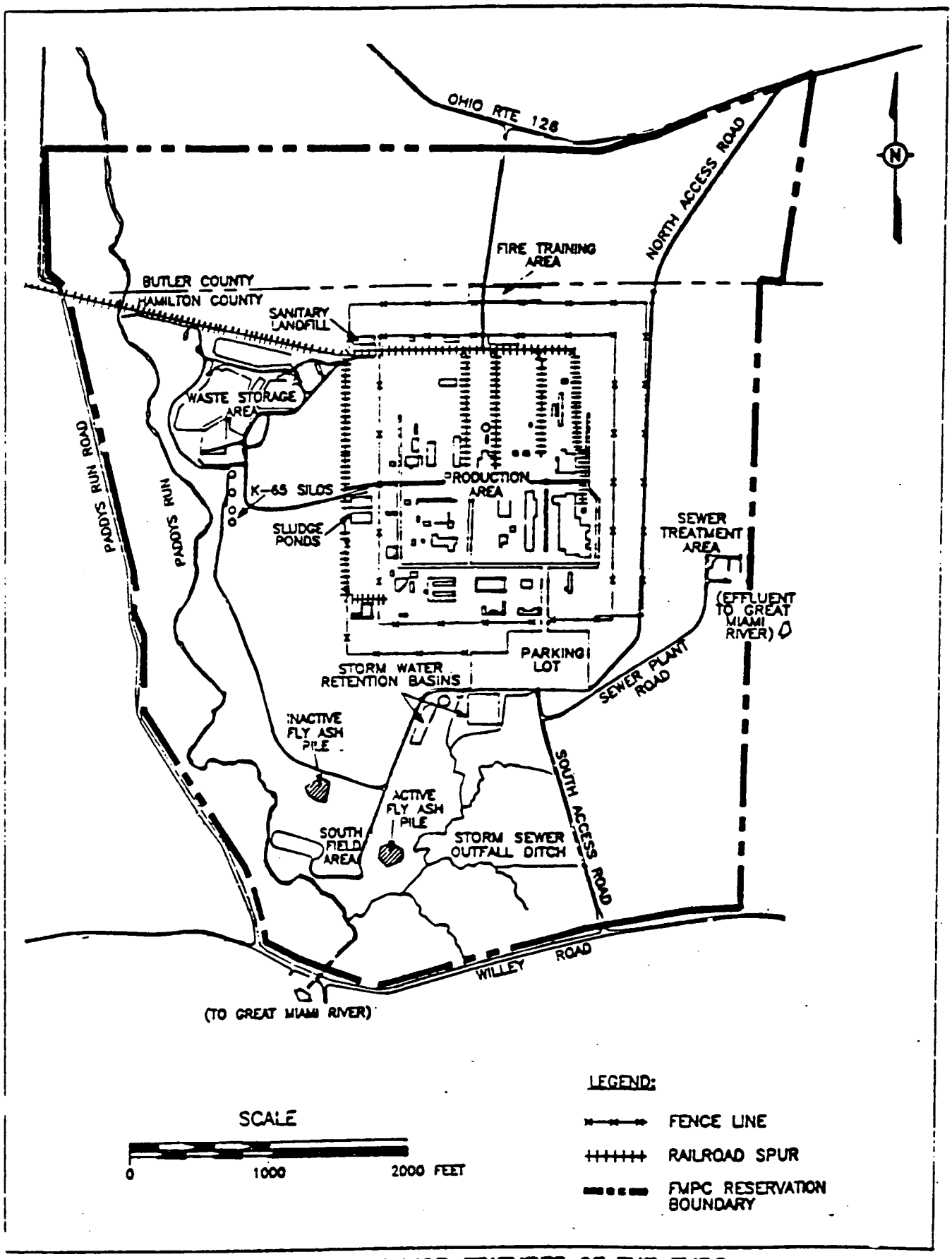

FIGURE 1 MAJOR FEATURES OF THE FMPC

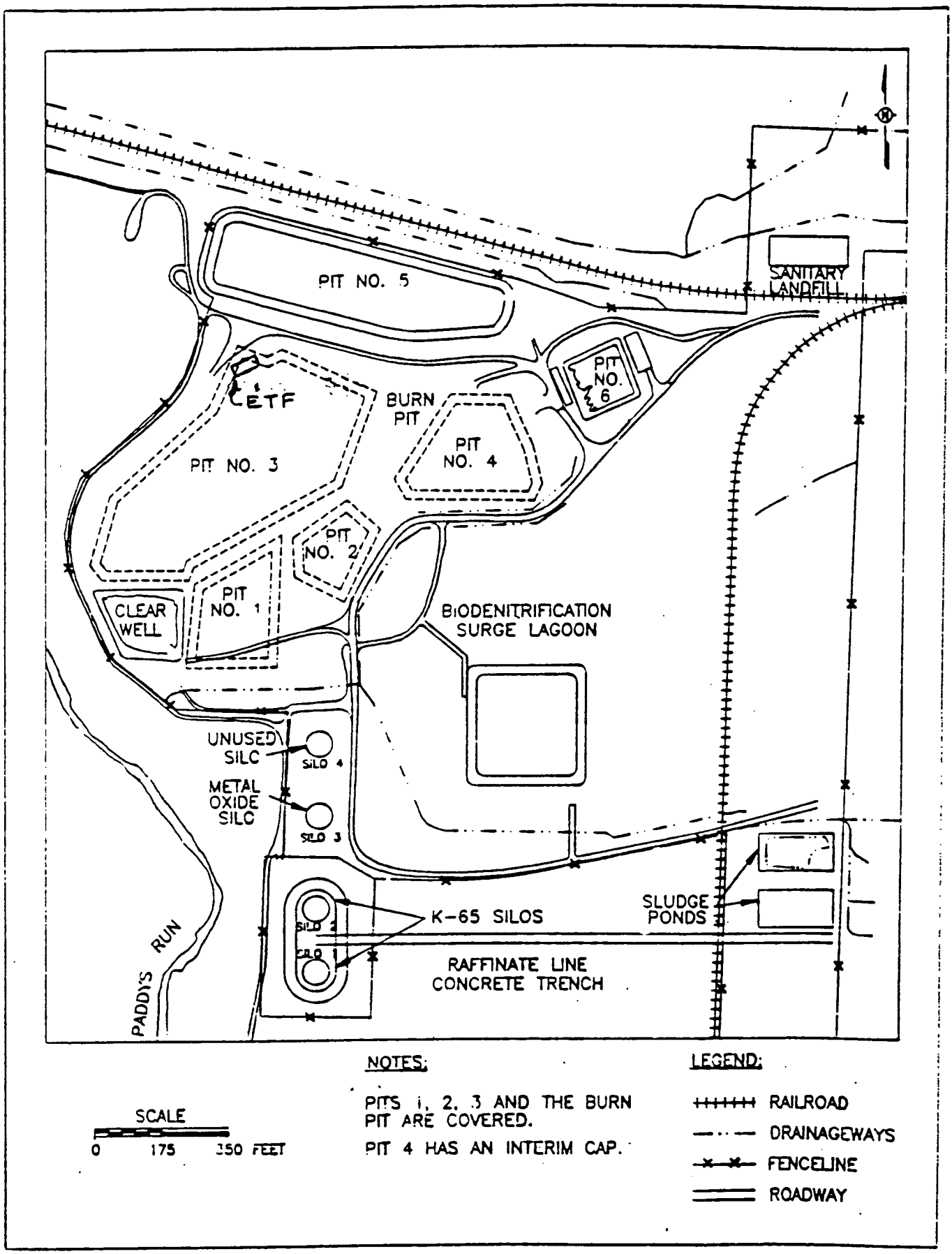

FIGURE 2. WASTE STORAGE AREA

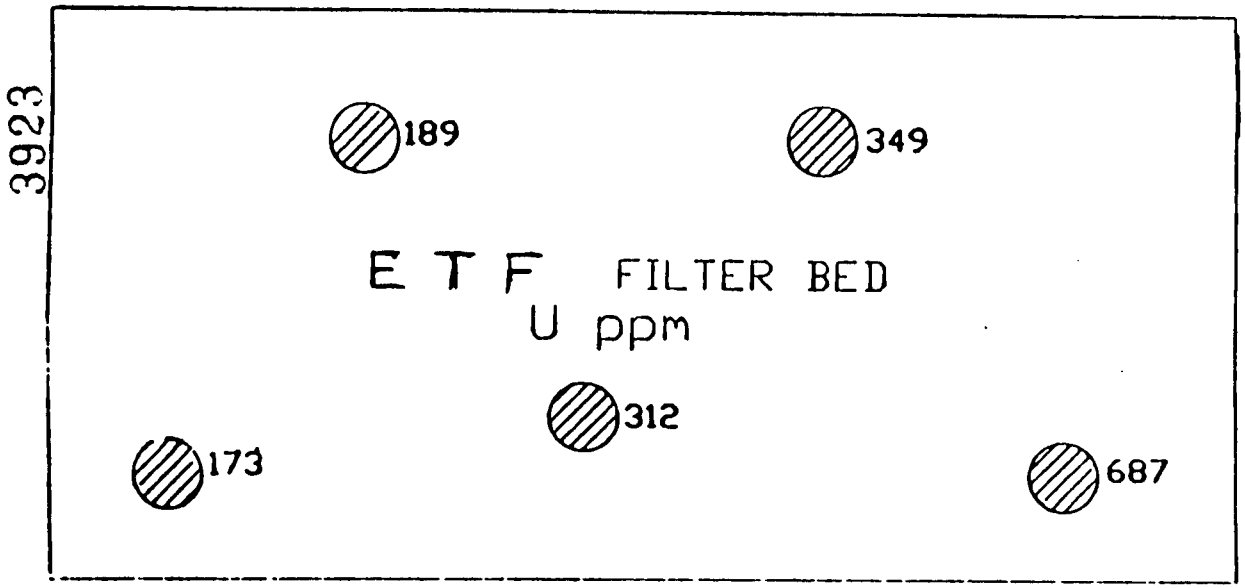

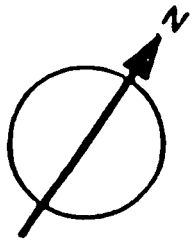

NOTE: DRAWING NOT TO SCALE

FIG. 3 E T F sampling layout

SOIL BORING LOCATIONS

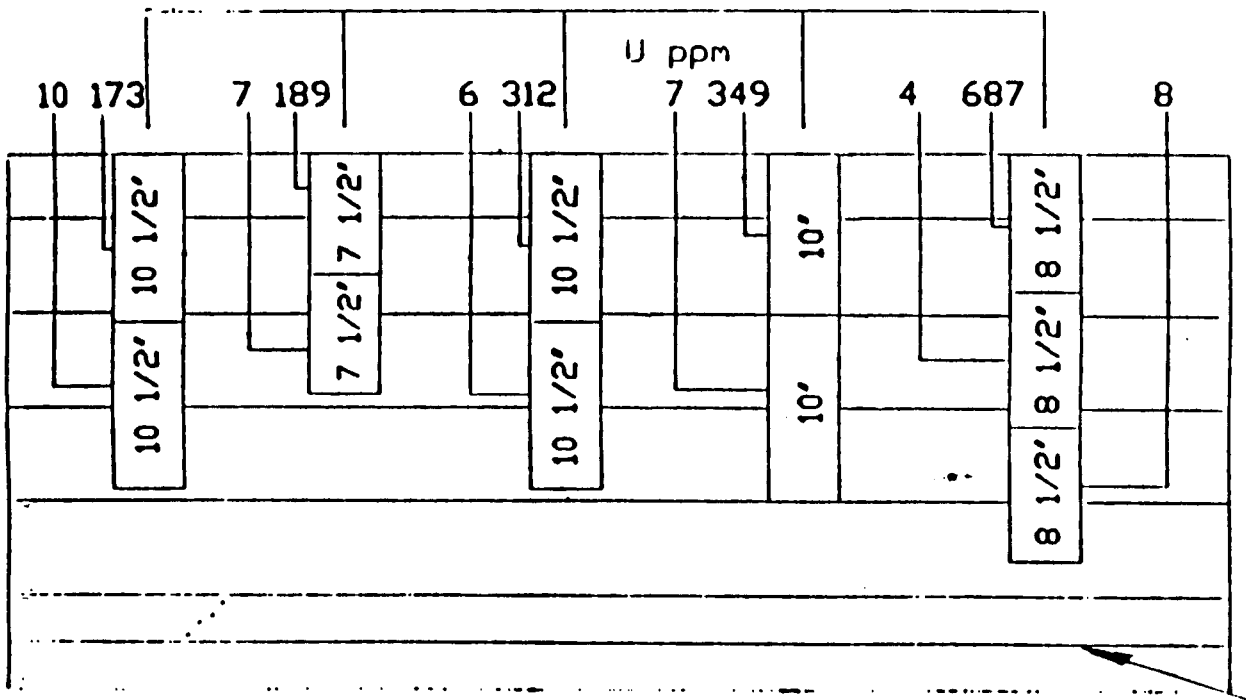

TYPES OF MATERIAL AND THICKNESS

- 4" PIT RESIDUE
- 6" FLYASH
- 6" SAND
- 6" GRIT
- 6" PEAGRAVEL
- 3" SAND
- 3" SAND
- PLASTIC

TABLE 1

OPERABLE UNIT 1 - WASTE PIT 5 CHARACTERISTICS

Description	Quantities and Units	References and/or Comments
Radioactive material concentrations		
Radium-226	235 to 999 pCi/g	Reference 1
Uranium-235	14 to 79 pCi/g	
Uranium-238	387 to 1,230 pCi/g	
Thorium-230	3,080 to 20,200 pCi/g	
Thorium-232	21 to 90 pCi/g	
Technetium-99	423 to 2,990 pCi/g	
Volatile inorganics		
Arsenic	139 to 2,800 mg/kg	Reference 1
Mercury	1.9 to 6.2 mg/kg	
Organics		
PCBs (Aroclor 1254)	750 ppb	Reference 1
HSL semivolatiles		The concentration level for HSL semivolatiles analyzed was below quantification level. See Appendix B of Reference 1 for concentrations.

TABLE 1
(Continued)

Description	Quantities and Units	References and/or Comments
HSL inorganics		Reference 1
Aluminum	6,373 to 15,400 mg/kg	
Calcium	116,000 to 206,144 mg/kg	
Iron	10,979 to 17,900 mg/kg	
Magnesium	807 to 63,200 mg/kg	
Arsenic	139 to 2,800 mg/kg	
Mercury	0.4 to 1.8 mg/kg	
Vanadium	792 to 5,380 mg/kg	
Hazardous materials/wastes		Reference 1 All samples tested were within the established limits for corrosivity, reactivity, ignitability, and EP Toxicity.
Listed hazardous materials		The concentration level for all listed hazardous materials analyzed was below quantification level. See Appendix B of Reference 1 for concentrations.

References:

1. Weston, Roy F., November 1987, "Characterization Investigation Study Volume 2: Chemical and Radiological Analyses of the Waste Storage Pits," prepared for Westinghouse Materials Company of Ohio, Cincinnati, OH.

2. Advanced Sciences, Inc., October 1986, "Remedial Investigation of the Feed Materials Production Center, Fernald, Ohio, Part I: Evaluation of Current Situation," prepared for Westinghouse Materials Company of Ohio, Cincinnati, OH.

3. Weston, Roy F., March 1988, "Geotechnical Evaluation of Feed Properties Material Properties of Waste Pit Materials at the Feed Materials Production Center, Fernald, Ohio," prepared for Westinghouse Materials Company of Ohio, Cincinnati, OH.

4. Appendix F of Reference 1 - Geological Description of Waste Pit Borings.

ATTACHMENT 1

ESTIMATION OF DOSES AND RISKS ASSOCIATED WITH THE WASTE PIT 5 EXPERIMENTAL TREATMENT FACILITY (ETF)

INTRODUCTION

This assessment will characterize the doses and risks to three Reasonable Maximally Exposed (RME) individuals as identified under the following Exposure Scenarios:

(1) A worker engaged in surveillance activities in the vicinity of the ETF within a time frame of one day per week for the entire year (since this area is a controlled-entry zone) thereby constituting the maximum credible exposure for this scenario;

(2) A worker engaged in field activities such as maintenance, construction, and soil disturbance and is assumed to work in the contaminated area on a daily basis, five days per week, for a total length of time of one month; and

(3) The potential for exposure to members of the general public where the exposure will continue for the entire year as a result of atmospheric dispersion of resuspended contaminants.

Figure (2) of the Removal Site Evaluation for Waste Pit 5 Experimental Treatment Facility illustrates the location of the ETF within the Waste Pit Area. Figure (3) illustrates the available sample points and the corresponding concentrations of uranium associated with the ETF.

The format for this investigation will consist of the following components: 1) source characterization, 2) exposure scenarios and their associated parameters, 3) exposure pathways and their methodology, and 4) dose and risk results for each exposure scenario.

SOURCE CHARACTERIZATION

The source for this investigation is taken to be the material contained in the ETF that originally came from Waste Pit 5. For purposes of this investigation the source term is assumed to be uniformly and homogeneously distributed in the area around the ETF. The volume of contamination is assumed to be uniformly distributed to a depth of three feet within the ETF and to a depth of one foot outside the ETF. These assumptions are made for two reasons: 1) to ensure that a conservative exposure or dose and risk estimate is made and 2) to account for the lack of measured or observed concentrations of contaminants outside the ETF.

The external radiation pathway is primarily controlled by gamma-ray radiation. Gamma radiation is the principal radiation of concern for the external radiation pathway because it is sufficiently penetrating to represent a dose at considerable distances. The Dose Conversion Factors (DCFs) for ground contamination are based on exposure at a distance of one meter above the ground. These DCFs represent the annual effective dose equivalent from exposure to external radiation.

The radiation dose from inhalation has been extensively evaluated by the International Radiation Protection Association in its Publication 30 (ICRP, 1979-1982). Dose equivalents in organs and tissues of the body are calculated with models that describe first the entrance of materials into the body and then the deposition and later retention of the radionuclides in the bodily organs. Dose equivalents estimate the energy deposition of the radionuclides in the tissues of the body (ICRP, 1979-1982). Dose conversion factors for inhalation represent the committed effective dose equivalents per unit intake of a radionuclide.

The exposure and risk associated with the relatively high concentrations of arsenic is evaluated using the corresponding slope factor, obtained from the Health Effects Assessment Summary Tables (HEAST), with the inhalation pathway in each of the three exposure scenarios. Arsenic is the only non-radioactive contaminant addressed in this assessment. This is in part due to the relatively high concentrations and due to the fact that arsenic is a carcinogen and can therefore be compared easily with the radioactive contaminants.

There are a total of five sample points identified in Figure 1 with each point having between two and three measurements at varying depths. Total uranium, thorium-230, and radium-226 are assumed to represent the only radionuclides of concern (due in part to the available data and the fact that Tc-99 does not represent a significant threat in this exposure scenario). The maximum concentration of uranium represented by the five measurements was measured to be:

687 parts per million = Concentration at location 5 in Figure 1.

Assuming a natural isotopic activity distribution with U-234 and U-238 in secular equilibrium, would correspond approximately to the following activities:

Total Uranium ~ 480 pCi/g
U-238 = 234 pCi/g
U-235 = 10.8 pCi/g
U-234 = 234 pCi/g

Using information detailing the concentrations of the various radioactive contaminants which are present in the waste pit, a breakdown of the concentration of radium and thorium can be inferred for both the ETF and the surrounding area. The radionuclide concentrations presented in Table 1 are provided in terms of concentration ranges based on measured values. The currently published results of the Weston characterization study indicate that the maximum relative proportion of uranium-238 to thorium and radium are 1.65 and 0.125 respectively. Using these calculated ratios, an estimate of the amount of radium and thorium can be made. The radium is then estimated to be 142 pCi/g and analogously thorium is found to be approximately 1,872 pCi/g. The range in concentration for arsenic in the waste pit material was found to be 139 to 2,800 mg/kg (milligram of arsenic per kilogram of waste material). These values will be assumed to represent a homogeneous and

uniform distribution of contaminants in the ETF and outside the facility to reduce the complexity of the calculations and to provide a conservative upper-bound on the dose and risk. The depth of the contamination is assumed to be two feet.

EXPOSURE SCENARIO AND PARAMETERS

The three exposure scenarios evaluated in this assessment are identified in the introduction. The first exposure scenario is the exposure to a worker who engages in activities in the contaminated area one day per week. These may include general monitoring, surveillance, and maintenance activities. The individual is not expected to wear a respirator and is therefore exposed to resuspended dust. The second exposure scenario evaluates a worker involved in activities which disturb the ground resulting in a resuspension of contaminated soil, but is expected to have, at a minimum, a half-face respirator. The first exposure scenario for the worker who engages in activities one day per week is characterized by the following Exposure Factor (EF) which describes the individual's annual exposure.

EF = Exposure Factor, 0.0456.

(Based on a one day (8 hour) exposure each week for 50 weeks each year.)

There are several source term parameters that function to characterize the dose to the RME individual of exposure scenario number (1). These source term parameters are a component of the direct (external) radiation pathway (DOE, 1989).

FA = Area Factor, 1.
(Based on the assumptions identified in the source term characterization.)

FS = Shape Factor, 1.
(Based on a circular, infinite medium.)

FD = Depth Factor, 1.

The parameters identified above for exposure scenario (1) relate to the external radiation pathway. The parameters which cover the inhalation pathway via resuspended dust are as follows.

FA_2 = 1, Area Factor.

$FA_2 = A^1/2/(A^1/2+DL)$.

Bulk Density = soil default value of 1.8 g/cm^3.

A = Area of Contamination. DL = Dilution length, default value of 3 meters is typically used.

$FCD_i2 = T(t)/d_m$ For $C_d(t) + T(t) < dm$.

Where $C_d(t)$ = Uncontaminated cover depth at time t= 0.
T(t) = Contaminated zone thickness at time t, 0.6 meters.

d_m = Mixing depth, default of 0.15 meters. The subscript "i" and the subscript "2" represents the ith radionuclide and the inhalation pathway, respectively.

The cover and depth factor represents the fraction of resuspended soil particles at the ground surface that are contaminated. It is calculated by assuming that the mixing of the soil will occur within a layer of thickness d_m at the surface (U. S. DOE, 1989). The $C_d(t)$ represents the time dependent uncontaminated cover depth in units of meters. While T(t) represents the time dependent contaminated zone thickness depth in units of meters.

FI_2 = Inhalation Rate, 8400 m^3/yr.

A more detailed description of the external radiation and inhalation pathways will be given in the following section.

The second exposure scenario, which characterizes the RME individual who will be actually performing the removal action is composed of only one pathway external radiation. The inhalation of resuspended dust is potentially significant with the excavation of contaminated soil, but is eliminated due to the requirement of respirators.

The exposure and source term parameters for the external radiation pathways for exposure scenario 2 are as follows:

EF = 0.0394.
(Based on: 8 hours of exposure each day, 5 days each week, and for a period of two months). The removal and cleanup of the ETF is estimated to take approximately one month for completion.)

The area factor, FA, the shape factor, FS, and the depth factor, FD, are all taken to be 1.0 as in exposure scenario (1).

Exposure scenario (3) was included to examine the potential for off-site personnel to be affected by the conditions at the ETF. This scenario involves the long term exposure to fugitive dust as a result of the initial abnormal occurrence and the potential for additional material to be removed by high winds. The scenario, therefore, has only one significant component, the pathway involving inhalation of resuspended dust from the area in and

around the ETF. The significance of other transport routes which could conceivably affect individuals off-site is reduced by either of the following mechanisms: 1) the time frame for the transport is well beyond even the expected remedial actions of the entire waste pits or 2) the concentration of the contaminant would be reduced to levels where the estimated dose would be trivial. The atmospheric transport route is the most direct mechanism leading to exposure to individuals off-site.

The exposure and source term parameters for the inhalation pathway for exposure scenario (3) are as follows:

EF = 0.3333.
(Based on: 8 hours of exposure each day, 7 days each week for the entire year.)

The area factor, FA_2, the shape factor, FS, and the depth factor, $FD_{i2}(t)$, are all taken to be 1.0 as in exposure scenario (1).

EXPOSURE PATHWAYS AND METHODOLOGY

The direct radiation pathway is shown in Equation (1) below:

$$\textbf{DOSE (mrem/yr)} = \textbf{DCF}_{i1} \times \textbf{Bulk Density} \times \textbf{Source Conc.} \times \textbf{EF} \times \textbf{FA}_1 \times \textbf{FS} \quad (1)$$

DCF_{i1} = (mrem/yr)/(pCi/cm^3).
Bulk Density of soil where a default value of 1.8 g/cm^3 is used.
Source Term = Picocuries per Gram of Soil for the i'h radionuclide.
FS = Shape Factor, 1.
FA_1 = Area Factor, 1.
EF = Occupancy and Exposure factor.

0.0456 = Exposure Scenario #1.
0.0394 = Exposure Scenario #2.
0.3333 = Exposure Scenario #3.

The inhalation of resuspended dust pathway is shown in Equation (2) below:

$$\textbf{DOSE (mrem/yr)} = \textbf{ASR} \times \textbf{FA}_2 \times \textbf{FCD}_i\textbf{2(t)} \times \textbf{EF} \times \textbf{FI}_2 \times \textbf{Source Term} \times \textbf{DCF}_{i2} \quad (2)$$

ASR = Air-to-Soil resuspension factor, 2 x 10^{-4} g/m^3 is typically used (U. S. DOE, 1989).

FA_2 = Area Factor for the inhalation pathway, designated by a subscript 2.

	ETF STRUCTURE	AREA AROUND ETF
FA_2* = $A^1/2/(A^1/2 + DL)$	$= 20^1/2/(20^1/2+3)$ $= 0.5985$	$200^1/2/(200^1/2+3)$ $=0.8249$

Where DL = Dilution length, default value of 3 meters (U. S. DOE, 1989).
$FCD_{i1}(t)$ = Cover and Depth factor, is conservatively taken to be 1.0.
EF = Exposure Factor, shown above for each scenario.
FI_2 = Intake Rate of Air, 8400 m^3/yr.
Source Term = Picocuries per Gram of soil for the i'h radionuclide.
DCF_{i2} = Annual Committed Effective Dose Equivalent from a one time exposure for 50 years of internal dose from the i'h radionuclide.

* Based on the contaminated area of the ETF being 20 m^2 and the surrounding area is approximately 200 m^2.

DOSE AND RISK RESULTS

The purpose of this section is to integrate the source term characterization, the exposure scenario descriptions, and the pathway analysis methodology and then estimate the resulting doses and risks. There were three exposure scenarios identified in the introduction, numbered as (1), (2), and (3). Over these three exposure scenarios, doses and risks were calculated for the ETF, the surrounding area, and the potential for exposure to the general population. The results will appear as follows:

Exposure Scenario #1 - Dose and Risk

ETF and surrounding area of 200 m^2
(approximately 8 meter diameter circle).

Exposure Scenario #2 - Dose and Risk

Removal & Cleanup of ETF and vicinity.

Exposure Scenario #3 - Dose and Risk

Fugitive dust carried off-site.

Exposure Scenario #1 - Doses and Risks

External Radiation Pathways

DOSE = DCF_{il} x Bulk Density x Source Term x EF x FA_l x FS

Table 3-1: Results For Routine Activity In The ETF And Vicinity - Direct Radiation Pathway Exposure Scenario #1

Radionuclide	AVG. Source Concentration (pCi/g)	DCF_{il} (mrem/yr) /pCi/cm^3)	Dose (mrem/yr)	Risk/yr*
Total U+D	480.0	6.97×10^{-2}**	1.77	3.55×10^{-7}
Th-230	1872.0	1.03×10^{-3}	0.158	3.16×10^{-8}
Ra-226	142.0	8.5	99.77	1.99×10^{-5}
Total	-	-	101.7	2.03×10^{-5}

* Based on BEIR III Risk Coefficient of 2×10^{-7} risk/mrem.

** - value shown represents U-238, values actually used in the calculations are representative of each of the isotopes of uranium.

+D = Aggregated Dose Conversion Factors for intake of principal radionuclide plus radionuclides of associated decay chain in secular equilibrium.

Inhalation of Resuspended Dust.

$$\text{Dose} = DCF_{i1} \times ASR \times FA_2 \times \text{Source Term} \times FCD_{i2} \times EF \times FI_2$$

Table 3-2A: Results From ETF and Vicinity - Inhalation Pathway For Exposure Scenario #1

Radionuclide	Source Concentration (pCi/g)	DCF_{i1} (mrem/yr)/ (pCi/cm^3)	Dose (mrem/yr)	Risk/yr*
Total U+D	480.0	1.2×10^{-1}	3.792	7.58×10^{-7}
Th-230	1872.0	2.6×10^{-1}	30.76	6.15×10^{-6}
Ra-226	142.0	7.9×10^{-3}	7.38×10^{-2}	1.47×10^{-8}
Total	-	-	34.63	6.92×10^{-6}

TOTAL RISK (per year from radionuclides) $= 2.03 \times 10^{-5} + 6.92 \times 10^{-6} = \underline{2.72 \times 10^{-5}}$

* Based on BEIR III Risk Coefficient of 2×10^{-7} risk/mrem.

+D = Aggregated Dose Conversion Factors for intake of principal radionuclide plus radionuclides of associated decay chain in secular equilibrium.

Inhalation of Resuspended Dust.

$$\text{Risk} = SF_{i1} \times ASR \times FA_2 \times \text{Source Term} \times FCD_{i2} \times EF$$

Table 3-2B: Results From ETF and Vicinity - Inhalation Pathway For Exposure Scenario #1

Contaminant	Source Concentration (mg/kg)	SF_{i1} (m^3/ug)	Total Exposure ug	Risk/yr*
Arsenic	2800.0	4.3×10^{-3}	3.792	9.01×10^{-5}

TOTAL RISK (per year Arsenic) = $2.03 \times 10^{-5} + 6.92 \times 10^{-6} = 2.72 \times 10^{-5}$

Exposure Scenario #2 - Doses and Risks

External Radiation Pathway

$$\text{Dose} = DCF_{i1} \times \text{Bulk Density} \times \text{Source Term} \times EF \times FA_1 \times FS$$

Table 3-3: Results For ETF Removal External Radiation Pathway For Exposure Scenario#2

Radionuclide	Source Concentration (pCi/g)	DCF_{i1} (mrem/yr) /(pCi/cm^3)	Dose (mrem/yr)	Risk/yr*
Total U+D	480.0	6.97×10^{-2}	1.53	3.07×10^{-7}
Th-230	1872.0	1.03×10^{-3}	0.137	2.73×10^{-8}
Ra-226	142.0	8.56	86.2	1.72×10^{-5}
Total	-	-	87.86	1.76×10^{-5}

* Based on BEIR III Risk coefficient of 2×10^{-7} Risk/mrem.

+D = Aggregated Dose Conversion Factors for intake of principal radionuclides plus radionuclides of associated decay chain in secular equilibrium.

Exposure Scenario #3 - Doses and Risks

Inhalation of Resuspended Dust.

Dose = DCF_{i1} x ASR x FA_2 x Source Term x FCD_{i2} x EF x FI_2

Table 3-4: Results For RME Off-Site - Inhalation Pathway For Exposure Scenario #3

Radionuclide	Source Concentration (pCi/g)	DCF_{i1} (mrem/yr) /(pCi/cm^3)	Dose (mrem/yr)	Risk/yr*
Total U+D	0.48	1.2 x10^{-1}	2.8x10^{-1}	5.5x10^{-8}
Th-230	1.9	2.6 x10^{-1}	2.3	4.5x10^{-7}
Ra-226	0.1	7.9 x10^{-3}	5.4x10^{-3}	1.1x10^{-9}
Total	-	-	2.5	5.1x10^{-7}

* Based on BEIR III Risk Coefficient of 2 x10^{-7} risk/mrem.
+D = Aggregated Dose Conversion Factors for intake of principal radionuclide plus radionuclides of associated decay chain in secular equilibrium.

Inhalation of Resuspended Dust.

Dose = SF_2 x ASR x FA_2 x Source Term x FCD_{i2} x EF x FI_2

Table 3-4 B: Results For RME Off-Site - Inhalation Pathway For Exposure Scenario #3

Contaminant	Source Concentration (mg/kg)	SF_2 (m^3/ug)	Total Exposure (ug)	Risk/yr*
Arsenic	2.8	4.3 x10^{-3}	1.3	7.8 x 10^{-7}

SUMMARY/DISCUSSION OF RESULTS

Doses and Risks were estimated for three exposure scenarios coupled with the contamination in and around the ETF. The total source term and the overall extent was determined using the observed concentrations of uranium, thorium, and radium within the ETF, see Figure (1). Exposure scenario number (1) was identified as an external radiation pathway which occurs as the receptor, an RME individual for this pathway, performs normal surveillance activities in the area near the ETF on a given day. This particular scenario assumes the RME is exposed in a fashion which includes both external radiation and inhalation of resuspended dust. Exposure scenario number (2) was identified as a worker who is involved with the dismantling the existing ETF structure and excavates the ground. Exposure scenario (2) incorporates only the external radiation pathway due to the fact that excavation activities require respirators. Exposure scenario (3) considers the potential for exposure to the general public via the fugitive dust pathway. The estimate of the concentrations of the various contaminants was based on the dilution length of 3 meters. By assuming that the nearest resident is 300 meters from the source and using a straight reduction in concentration by a factor of 100, the net ground concentration could be conservatively estimated. In actuality, the extrapolation of the dilution length would best be represented by an exponential decay function. This would tend to reduce the concentration by four orders of magnitude over a three hundred meter distance instead of just 100.

The total annual risks for exposure scenario number (1) are shown below:

ETF and Vicinity

Total Risk = 2.72×10^{-5}

Similarly, the total annual risks for exposure scenario number (2) are shown below:

ETF Removal Activities

Total Risk = 1.76×10^{-5}

The total annual risks for exposure scenario number (3) are:

Nearest Resident

Total Risk = 5.06×10^{-7}

The highest risk (approximately 3 chances in 100,000 of dying of an excess cancer) is shown for a worker who frequently walks in the area of the ETF and is exposed to the resuspended dust at least one day per week for one year. These risks are based on several assumptions, outlined below, which greatly exaggerate the doses and associated risks.

1) A constant homogeneous source distribution covering 200 m^2.
2) Conservative, hypothetical exposure scenarios including an off-site dose.
3) A uniform source distribution to a depth of two feet.
4) A conservative dust resuspension factor.

Considering the above assumptions, the doses to the off-site RME (a member of the general public) estimated in this assessment can be considered insignificant since natural sources (in certain areas of the country) have been estimated by the NCRP to deliver a dose of approximately 300 mrem per year (NCRP, 1987). Typically, manmade sources deliver a dose of approximately 70 mrem per year. The EPA and NRC have proposed BRC (Below Regulatory Concern) dose levels of between 4 to 10 mrem per year, committed effective dose equivalent, for an individual and 1 mrem per year for population exposures. The risks posed to the workers identified in this assessment are likewise small and can be considered as acceptable for members of the Fernald site work force. The acceptance is consistent with general working conditions, given the fact, that the work force on site is continually monitored for exposures to hazardous substances. The risk assessment presented here considered the current situation of the ETF and the severe weather conditions which resulted in the removal of the ETF roof and some of the dry waste material. To assess this scenario, a 20 m^2 area was considered to be contaminated. Under the given conditions the analysis shows borderline results for action. Given the fact that the ETF is not routinely maintained in a secure and controlled fashion, there is a significant potential for additional releases of waste pit material. Therefore, the potential risks are sufficient justification for action to be taken.

REFERENCES

International Commission on Radiological Protection, 1979-1982. Annals of the ICRP, Recommendations of the International Commission on Radiological Protection, Pergamon Press, Oxford, NY.

National Academy of Sciences, 1972. "The Effects on Populations of Exposure to Low Levels of Ionizing Radiation," NAS/NRC Advisory Committee on Biological Effects of Ionizing Radiation, known as BEIR III.

National Council on Radiation Protection and Measurements, 1987. "Ionizing Radiation Exposure of the Population of the United States," NCRP Report 93.

United Nations, 1977. "Ionizing Radiation Levels and Effects," United Nations Scientific Committee on the Effects of Atomic Radiation."

Travis, C.C. et. al. 1989. "Is Ionizing Radiation Regulated More Stringently than Chemical Carcinogens," Health Physics, Volume 56, No. 4, pages 527-531.

U.S. Department of Energy, 1989. A Manual for Implementing Residual Radioactive Material Guidelines, Argonne National Laboratory, ANL/ES-160, DOE/CH/8901.