R-002-204.15

4219

# REVISED SAMPLING PLAN FOR THE PERCHED GROUNDWATER REMOVAL ACTION PLANT VOLATILE ORGANIC COMPOUND (VOC) TREATMENT SYSTEM

03/15/93

DOE-FN/FERMCO
DOE-1055-93
12
LETTER

**Department of Energy**
**Fernald Environmental Management Project**
P.O. Box 398705
Cincinnati, Ohio 45239-8705
(513) 738-6357

4219

MAR 15 1993

DOE-1055-93

Mr. James A. Saric, Remedial Project Director
U.S. Environment Protection Agency
Region V - 5HRE-8J
77 West Jackson Street
Chicago, Illinois 60604

Mr. Graham E. Mitchell, Project Manager
Ohio Environmental Protection Agency
40 South Main Street
Dayton, Ohio 45402

Dear Mr. Saric and Mr. Mitchell:

**REVISED SAMPLING PLAN FOR THE PERCHED GROUNDWATER REMOVAL ACTION PLANT 8 VOLATILE ORGANIC COMPOUND (VOC) TREATMENT SYSTEM**

Reference: Letter, DOE-329-92, J. R. Craig to C. A. McCord and G. E. Mitchell, "Perched Groundwater Removal Action Plant 8 Treatment System," dated August 13, 1991

In accordance with our discussion of January 27, 1993, this letter serves to notify you of a revision to the sampling plan for the Perched Groundwater Removal Action Plant 8 VOC Treatment System. The Plant 8 VOC Treatment System was installed as part of Comprehensive Environmental Response Compensation and Liability Act (CERCLA) Removal Action No. 1, entitled "Removal of Contaminated Water Under Fernald Environmental Management Project (FEMP) Buildings." The revised plan is based on over a year of analytical data collected in support of the original sampling plan described in the Reference and shown in Figure 1. Changes in the sampling plan were deemed reasonable and necessary based on the following:

- **Proven System Effectiveness**

  Since the system's first batch was processed on July 23, 1991, effluent sampling results (Enclosure 1) have continuously indicated that the volatile organic compounds detected in the influent samples are being effectively removed by the treatment system. The VOC treatment system discharge is then routed to the Plant 8 Sump Treatment System for uranium and other metals removal and subsequently to other FEMP facilities for radiological monitoring prior to discharge to the Great Miami River.



Recycled and Recyclable

- **Provision of VOC Treatment System Duplicity**

The system consists of two parallel activated carbon filter trains each containing a primary and secondary drum of activated carbon (see Figure 1). The secondary drum functions as a repeat or backup. In the event that breakthrough of the primary drum occurs, the backup will provide for removal of the contaminants. In addition, the Standard Operating Procedure (SOP) for the facility calls for a primary drum to be removed from the facility when breakthrough is detected, as opposed to operating until full loading (i.e. whereby effluent concentration is allowed to increase to influent concentration).

- **Excessive Sampling Costs**

Continued sampling and analytical costs under the existing sampling plan will exceed $1,000,000 during each additional year of operation (Figure 2).

When the original sampling plan was prepared, the key operating parameter was that of proving system effectiveness through influent and effluent sampling, while primary and secondary drum discharge point samples were utilized as check parameters for system breakthrough. Now that the system has proven effective in the removal of VOCs, the emphasis, or key parameter, will be shifted to that of primary drum breakthrough monitoring.

The revised sampling plan is shown in Figure 3. Per the revised plan, monitoring for breakthrough occurs at the discharge point of the primary drums. Samples will be collected from every batch and analyzed for Purgeable Organic Halides (POX). POX analysis will detect the presence of halogenated organic molecules which contain chloride, bromide, and iodide. The results are reported as a sum of the halogenated compounds rather than compound specific and have a detection limit of 5 ug/L. Due to the fact that the primary constituents of concern (i.e. those found most frequently and in the highest concentration - see Enclosure 1) are those detected by the POX analyses, detection of these compounds will provide a valid indicator for breakthrough of the primary drums.

At the time breakthrough of a primary drum is detected, the secondary drum will be moved to the primary position and a new drum will be placed in the secondary position. In order to provide quantitative data for verification of total system effectiveness, sampling of the secondary drums for Total VOAs will occur once per month. Due to the fact that only organic compounds have been detected and that the VOC treatment system was designed for the removal of organics, further sampling for inorganics, semi-volatiles, pesticides and PCBs, as well as Total Radiological Parameters (TRP) are no longer deemed necessary. However, annual extraction well sampling results will be evaluated to verify that VOCs remain the only contaminants of concern. The cost for the revised sampling plan is indicated on Figure 4.

In addition, the frequency for total uranium analyses at the extraction wells will be changed from yearly to monthly. This will allow for the collection of well-specific quantitative data from which uranium removal may be calculated.

In conclusion, the revised sampling plan significantly reduces the analytical parameters, frequency, and number of sample locations, as well as providing a minimum yearly savings of approximately $1,000,000 (difference between Figure 1 and Figure 4) without impact to system efficiency and operation and could save as much as $21,000,000/year in the event that pumping of the Plant 2/3 perched water lens requires continuous operation of the Plant 8 VOC Treatment System. The above described sampling will be initiated on February 1, 1993.

If you or your staff have any questions, please contact me at FTS/Commercial (513) 738-6159, or Pete J. Yerace, of my staff at FTS/Commercial (513) 738-6178.

Sincerely,

Jack R. Craig
Fernald Remedial Action
Project Manager

FN:Yerace

Enclosure: As Stated

cc:

W. E. Murphie, EM-42, TREV
K. A. Hayes, EM-424, TREV
B. Barwick, USEPA-V, 5CS-TUB-3
G. Jablonowski, USEPA-V, AT-18J
J. Kwasniewski, OEPA-Columbus
P. Harris, OEPA-Dayton
M. Proffitt, OEPA-Dayton
T. Schneider, OEPA-Dayton
J. Michaels, PRC
L. August, GeoTrans
J. D. Wood, ASI/IT
R. L. Glenn, Parsons
P. Clay, FERMCO/19
D. Dubois, FERMCO/65-2
J. W. Thiesing, FERMCO/2
AR Coordinator, FERMCO

# FIGURE 1
# EXISTING SAMPLING
OF THE
PLANT 8 VOLATILE ORGANIC COMPOUND (VOC) TREATMENT SYSTEM

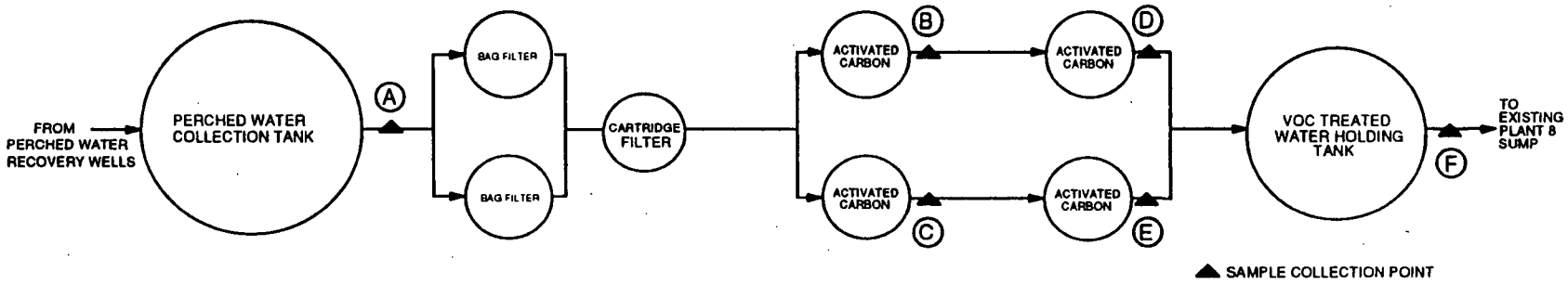


| SAMPLE POINT | ANALYSES | FREQUENCY | RATIONALE |
|---|---|---|---|
| A | Full HSL<br>Total Radiological Para<br>Total Uranium* | Every Tenth Sequential Batch | Treatment System Effectiveness |
| B, C, D, E | Total Volatile Organic Analytes<br>Gross Alpha & Beta*<br>Purgeable Organic Halides* | Every Batch | Breakthrough of Activated Carbon |
| F | Full HSL<br>Total Radiological Para<br>Total Uranium* | Every Batch | Treatment System Effectiveness |
| Extraction Wells | Full HSL<br>Total Radiological Para<br>Total Uranium | Annually | Pumping Effectiveness |

CHECK PARAMETER → (B, C, D, E)

KEY OPERATING PARAMETER → (F)

* Analysis performed at onsite laboratory

# FIGURE 2
## 1 YEAR ANALYTICAL COSTS
### FOR EXISTING SAMPLING PLAN

| | 1 Batch/week | Continuous Operation (i.e. 3 shifts/day, 7 days/week) |
|---|---|---|
| Sample points A and F = | | |
| Full HSL | 5000 | |
| TRP | 2000 | |
| Total Uranium | 50 | |
| Total | $ 7050 | |
| Sample Point A = 6 X $ 7050 = $ 42,300 (Taken 1/10 batches) | | $ 888,300 |
| Sample Point F = 52 X $ 7050 = $ 366,600 (Taken every batch) | | $ 7,698,600 |
| Sample Points B, C, D and E = | | |
| Total VOAs | 300 | |
| POX | 125 | |
| Gross Alpha & Beta | 75 | |
| Total | $ 500 | |
| Sample Points = 4 X 52 X $ 500 = $ 104,000 (Taken every batch @ 4 locations) | | $ 2,184,000 |
| Sub total | $ 512,900/year | Sub total $ 10,770,900/year |
| Total - With markups for labor, QA/QC, overhead, . . ., cost exceeds $ 1,000,000/year | | Total $ 21,541,800/year |

4219

# FIGURE 3
# REVISED SAMPLING
OF THE
PLANT 8 VOLATILE ORGANIC COMPOUND (VOC) TREATMENT SYSTEM

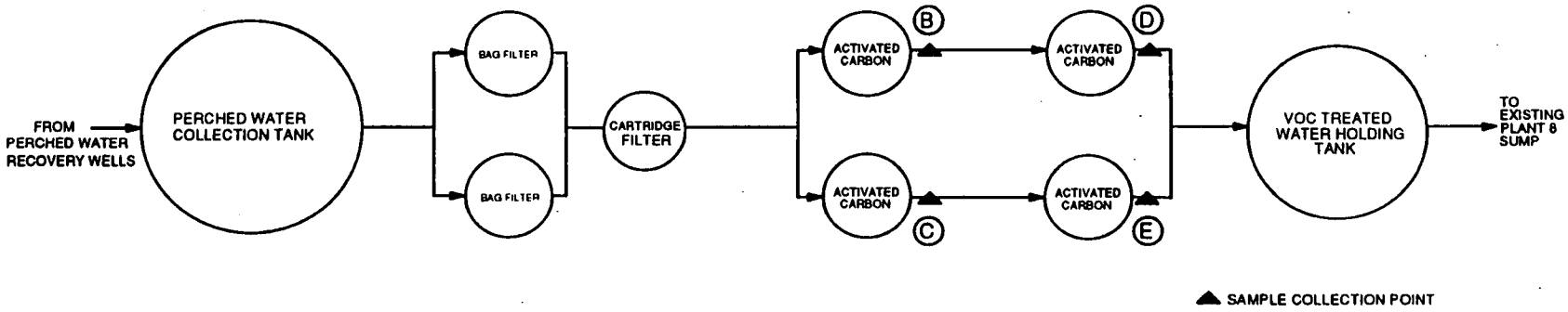


| | SAMPLE POINT [1] | ANALYSES | FREQUENCY | RATIONALE |
|---|---|---|---|---|
| KEY OPERATING PARAMETER → | B & C | Purgeable * Organic Halides | Every Batch [2] | Breakthrough of Activated Carbon [3] |
| CHECK PARAMETER → | D & E | Total Volatile Organic Analytes | Once per month | Verify integrity of system |
| | Extraction Wells | Full HSL Total Radiological Para. | Annually | Pumping Effectiveness |
| | | Total Uranium | Once per month | Uranium Removal |

NOTES: 1) Current sample points A and F will be eliminated.

2) In the event the system is converted from batch to continuous operation, "Batch" will mean "Day of Operation."

3) At the time purgeable halide analyses indicates breakthrough, the secondary drum will be moved to the primary position and a new drum will be placed in the secondary.

* Analysis performed at onsite laboratory. In the event purgeable organic halide analysis equipment is non-functional, VOAs will be performed.

# FIGURE 4
## 1 YEAR ANALYTICAL COSTS
### FOR REVISED SAMPLING PLAN

| | 1 Batch/week | Continuous Operation (i.e. 3 shifts/day, 7 days/week, however, cost based on sampling frequency of once/day) |
|---|---|---|
| Sample points B and C = | | |
| POX | $ 125 | |
| Sample Points B & C = | 2 X 52 x $ 125 = $ 13,000 (Taken every batch) | $ 91,000 |
| Sample Points D and E = | | |
| Total VOAs | $ 300 | |
| Sample Points D & E = | 2 X 12 x $ 300 = $ 7,200 (Taken 1/month) | $ 7,200 |
| | Sub total $ 20,200/year | Sub total $ 98,200/year |
| Total - With markups for labor, QA/QC, overhead, . . ., cost is estimated at | $ 45,000/year | Total $ 196,400/year |

ENCLOSURE 1

# SUMMARY OF HAZARDOUS SUBSTANCE LIST (HSL) ANALYSES

FOR THE

# PERCHED GROUNDWATER TREATMENT SYSTEM

# PERCHED GROUNDWATER TREATMENT SYSTEM
## SUMMARY OF HAZARDOUS SUBSTANCE LIST (HSL) ANALYSES

| BATCH NO | DATE TREATED | GALLONS TREATED | ORIGIN PLT NO | INLET ppb | OUTLET ppb |
|---|---|---|---|---|---|
| 1 | 23-Jul-91 | 2450 | 6 | A: 48,B: 2400,C: 15,D: 6,E: 31, F: 11,L: 43 | N.D. |
| 2 | 25-Jul-91 | 1800 | 6 | B: 1200,D: 10,E: 11,L: 24 | N.D. |
| 3 | 23-Aug-91 | 4175 | 6 | A: 20,B: 2000,C: 8,E: 19,F: 6, I: 15,L; 43 | N.D. |
| 4 | 19-Sep-91 | 4975 | 6&9 | A: 17,B: 1900,C: 9,D: 11,E: 13 F: 7,J: 5,L: 28 | N.D. |
| 5 | 21-Oct-91 | 4400 | 6 | A: 9,B: 1100,C: 5,D: 8,F: 7, I: 8,J: 4,K: 2,L: 15,M: 9 | N.D. |
| 6 | 28-Oct-91 | 4650 | 2/3,8 | NO SAMPLE TAKEN | N.D. |
| 7 | 05-Nov-91 | 3900 | 2/3,8 | NO SAMPLE TAKEN | N.D. |
| 8 | 12-Nov-91 | 5135 | 2/3,8 | A: 12,B: 26 | N.D. |
| 9 | 19-Nov-91 | 5400 | 2/3,8 | H: 1,C: 1,A: 11,B: 10 | N.D. |
| 10 | 25-Nov-91 | 5120 | 2/3,8 | NO SAMPLE TAKEN | N.D. |
| 11 | 03-Dec-91 | 4709 | 2/3,8 | NO SAMPLE TAKEN | N.D. |
| 12 | 10-Dec-91 | 4716 | 2/3,8 | H: 3,G: 8,C: 1,F: 7,A: 11,B: 4 | N.D. |
| 13 | 17-Dec-91 | 4673 | 2/3,8 | NO SAMPLE TAKEN | N.D. |
| 14 | 23-Dec-91 | 4802 | 2/3,8 | NO SAMPLE TAKEN | N.D. |
| 15 | 30-Dec-91 | 5103 | 6,9,8 | NO SAMPLE TAKEN | N.D. |
| 16 | 07-Jan-92 | 4977 | 2/3,8 | NO SAMPLE TAKEN | N.D. |
| 17 | 13-Jan-92 | 5738 | 2/3,8 | NO SAMPLE TAKEN | FULL ANALYSIS NOT RECEIVED |
| 18 | 21-Jan-92 | 4922 | 9,2/3,8 | A: 25,B: 2200,C: 10,D: 32,E: 5, F: 7,L: 14 | N.D. |
| 19 | 27-Jan-92 | 3964 | 2/3,8 | NO SAMPLE TAKEN | N.D. |
| 20 | 03-Feb-92 | 4254 | 2/3,8 | NO SAMPLE TAKEN | N.D. |
| 21 | 10-Feb-92 | 4207 | 2/3,8,6 | NO SAMPLE TAKEN | N.D. |
| 22 | 18-Feb-92 | 4012 | 2/3,8 | NO SAMPLE TAKEN | N.D. |
| 23 | 24-Feb-92 | 4356 | 2/3,8 | NO SAMPLE TAKEN | N.D. |

| | | | | | |
|---|---|---|---|---|---|
| 24 | 02-Mar-92 | 4238 | 2/3,8 | A: 9,B:17 | N.D. |
| 25 | 09-Mar-92 | 4500 | 2/3,8 | NO SAMPLE TAKEN | N.D. |
| 26 | 16-Mar-92 | 4703 | 2/3,8,9 | NO SAMPLE TAKEN | N.D. |
| 27 | 23-Mar-92 | 4780 | 2/3,8 | NO SAMPLE TAKEN | N.D. |
| 28 | 30-Mar-92 | 4569 | 2/3,8 | NO SAMPLE TAKEN | N.D. |
| 29 | 06-Apr-92 | 4792 | 2/3,8 | NO SAMPLE TAKEN | N.D. |
| 30 | 13-Apr-92 | 3325 | 2/3,8 | A:8,B:10 | N.D. |
| 31 | 20-Apr-92 | 3661 | 6,8 | NO SAMPLE TAKEN | N.D. |
| 32 | 27-Apr-92 | 4426 | 2/3,8 | NO SAMPLE TAKEN | N.D. |
| 33 | 04-May-92 | 3721 | 9,8 | NO SAMPLE TAKEN | N.D. |
| 34 | 11-May-92 | 3951 | 2/3,8 | NO SAMPLE TAKEN | N.D. |
| 35 | 18-May-92 | 5159 | 2/3,8 | NO SAMPLE TAKEN | N.D. |
| 36 | 25-May-92 | 5090 | 2/3,8 | A:8,D:5,E:5 | N.D. |
| 37 | 01-Jun-92 | 4839 | 2/3,8 | NO SAMPLE TAKEN | N.D. |
| 38 | 08-Jun-92 | 5237 | 2/3,8 | NO SAMPLE TAKEN | N.D. |
| 39 | 15-Jun-92 | 4657 | 2/3,8 | NO SAMPLE TAKEN | N.D. |
| 40 | 22-Jun-92 | 5205 | 2/3,8 | A:7,D:6,E:7 | N.D. |
| 41 | 29-Jun-92 | 4477 | 2/3,8 | NO SAMPLE TAKEN | N.D. |
| 42 | 06-Jul-92 | 5217 | 2/3,8,6,9 | NO SAMPLE TAKEN | N.D. |
| 43 | 13-Jul-92 | 5139 | 2/3,8 | NO SAMPLE TAKEN | N.D. |
| 44 | 20-Jul-92 | 4326 | 2/3,8 | NO SAMPLE TAKEN | N.D. |
| 45 | 27-Jul-92 | 2949 | 2/3,8 | NO SAMPLE TAKEN | N.D. |
| 46 | 03-Aug-92 | 4538 | 2/3,8 | NO SAMPLE TAKEN | N.D. |
| 47 | 05-Aug-92 | 4704 | 6 | A:23,B:7,D:4,J:16 | N.D. |
| 48 | 10-Aug-92 | 4538 | 2/3,8 | NO SAMPLE TAKEN | N.D. |
| 49 | 17-Aug-92 | 4742 | 2/3,8 | NO SAMPLE TAKEN | ANALYSIS NOT RECEIVED |
| 50 | 24-Aug-92 | 4147 | 2/3,8 | ANALYSIS NOT RECEIVED | ANALYSIS NOT RECEIVED |
| 51 | 26-Aug-92 | 3886 | 6,8 | NO SAMPLE TAKEN | ANALYSIS NOT RECEIVED |
| 52 | 31-Aug-92 | 4606 | 2/3,8 | NO SAMPLE TAKEN | ANALYSIS NOT RECEIVED |
| 53 | 09-Sept-92 | 4983 | 2/3,8 | NO SAMPLE TAKEN | ANALYSIS NOT RECEIVED |
| 54 | 14-Sept-92 | 4344 | 6,9 | NO SAMPLE TAKEN | ANALYSIS NOT RECEIVED |
| 55 | 21-Sept-92 | 4822 | 2/3,8 | NO SAMPLE TAKEN | ANALYSIS NOT RECEIVED |
| 56 | 28-Sept-92 | 2478 | 2/3,8 | NO SAMPLE TAKEN | ANALYSIS NOT RECEIVED |
| 57 | 26-Oct-92 | 2112 | 6,2/3,8 | NO SAMPLE TAKEN | ANALYSIS NOT RECEIVED |
| 58 | 3-Nov-92 | 2803 | 2/3 | | ANALYSIS NOT RECEIVED |

| | | | | | |
|---|---|---|---|---|---|
| 59 | 9-Nov-92 | 2912 | 2/3 | | ANALYSIS NOT RECEIVED |
| 60 | 10-Nov-92 | 4818 | 6,2/3,8 | | ANALYSIS NOT RECEIVED |

LEGEND

A: 1,1,1 Trichloroethane
B: Trichloroethene
C: 1,1 Dichloroethene
D: 1,1 Dichloroethane
E: 1,2 Dichloroethene (TOTAL)
F: 1,2 Dichloroethane
G: Acetone
H: Methylene Chloride
I: Toluene
J: Carbon Tetrachloride
K: Cloroform
L: Tetrachloroethene
M: Dichloroethylene

ppb: parts per billion
N.D. = All analytes not detected
Note: Tributyl Phosphate, Pesticides/PCBs & Semi-volatiles undetected in any influent samples (metals excluded)