U-003-303.18

4267

OPERABLE UNIT 1 MINIMUM ADDITIVE WASTE STABILIZATION REMEDIAL DESIGN BENCH-SCALE TREATABILITY STUDY WORK PLAN VOLUME II MARCH 1993 REVISION NO. 2

DOE-FN/EPA

250
REPORT

Operable Unit 1
Minimum Additive Waste Stabilization
Remedial Design Bench-Scale
Treatability Study Work Plan
Volume II

Fernald Environmental Management Project
March 1993
Revision No. 2

Submitted by:
U.S. Department of Energy
Fernald Office
P.O. Box 398705
Cincinnati, Ohio 45239-8705

Operable Unit 1
Minimum Additive Waste Stabilization
Remedial Design Bench-Scale
Treatability Study Work Plan
Volume II

Fernald Environmental Management Project
March 1993
Revision No. 2

Submitted by:
U.S. Department of Energy
Fernald Office
P.O. Box 398705
Cincinnati, Ohio 45239-8705

Prepared by:
PARSONS
Fairfield, Ohio

Prepared for:
Fernald Environmental Restoration
Management Corporation

PARSONS

FERMCO
Restoration Management Corporation

Operable Unit 1
Minimum Additive Waste Stabilization
Remedial Design Bench-Scale Treatability Study Work Plan
Volume II - Appendices

CONTENTS

B Support Studies

C Standard Operating Procedures

D Sampling and Analytical Methodologies

E Health and Safety Plan

APPENDIX B

SUPPORT STUDIES

APPENDIX B - SUPPORT STUDIES

Experimental Design Overview

Figure B-1 shows a flow-diagram overview of the experimental design used for the MAWS project. Th appendix describes support studies that either have been performed or are currently being performed to support the MAWS Bench-Scale Treatability Study.

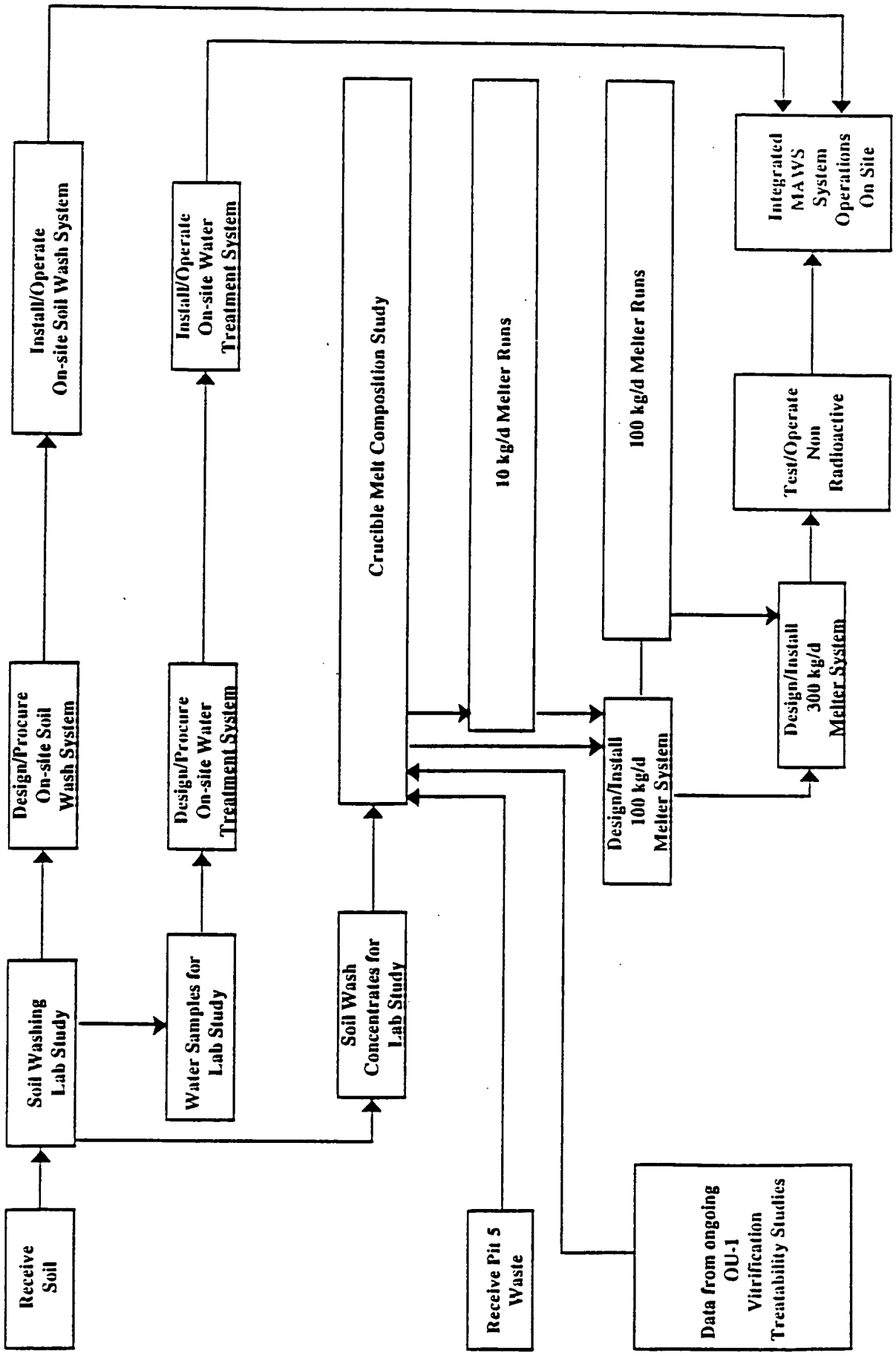

Figure B-1 - Flow Diagram Overview

MAC\BNL1\USDATA\OU-1\MAWS EXPERIMENTAL DESIGN

SECTION B1

SOIL WASHING

The following tasks will be performed at the Lockheed Analytical Laboratory (LAL):

Stage 1 - Physical-Only Separation

Physical-only separations studies in Stage 1 will focus on a qualitative and quantitative characterization of the distribution of uranium relative to specific soil size fractions. Stage 1 treatability testing amounts to bench-scale testing of small aliquots of the FEMP soils. The physical and chemical data obtained during the initial analysis will be used in a matrix of bench-scale tests designed to determine whether physical-only soil washing techniques will be effective in providing significant volume reductions of the FEMP soils. If the physical-only techniques are successful, no chemical testing will be performed. If the physical-only techniques are of limited success, a matrix of physical/chemical bench-scale tests will be performed.

The first series of tests during Stage 1 will use the sieve data and analytical data obtained in the initial analysis to determine if any of the soil size fractions can be separated as "clean" without further processing. If size fractionation alone is a possible remedy solution, a volume reduction will be calculated and recorded. Based on existing information (Lee and Marsh 1992), it is unlikely that simple size fractionation will provide significant volume reduction.

The second series of tests during Stage 1 will take several splits from individual 25-pound aliquots and process them in a bench-top attrition scrubber unit at various retention times and at the various rpm settings. After scrubbing, the soil will be wet sieved and the size fractions will be dried in a drying oven. When dry, three splits will be taken of the fractions and containerized. The soil in containers will be analyzed for uranium concentrations by laser phosphorimeter.

This data will be used to determine if the attrition scrubber was successful in reducing additional size fractions to below 35 pCi/g and, if so, at what rpm and retention time. This data will be used to calculate a volume reduction and will be recorded.

Stage 1 - Physical/Chemical Separation

The physical/chemical separation tests will use an oxidized bicarbonate/carbonate extraction fluid. This chemical extractant has been used successfully in the uranium mining industry for over 30 years. It is very selective for uranium. If this extractant is not effective on FEMP soils, other leaching agents (e.g., acids) will be evaluated.

Two series of leach tests will be conducted. In one series, the leach solution will be used in combination with an attrition scrubber. As described above, tests will be run at various retention times and rpm settings.

After scrubbing, the soil will be separated from the leach liquors and rinsed of residue leach liquor prior to being wet sieved. The extractant solution and rinse solutions will be analyzed using the laser phosphorimeter. Since we know the volume of extractant solution added to the soil by means of subtraction, we can calculate the uranium concentration of the extractant fluid minus the wet sieve solution.

The size fractions collected above will be dried in a drying oven. When dry, splits will be taken of the fractions and containerized. The soil in the containers will be analyzed by laser phosphorimeter, and the uranium concentration of the soil will be calculated. Additionally, splits of each size fraction will be taken for confirmatory analysis at LAL. This data will be used to determine if the attrition scrubber in combination with the extractant fluid was successful in reducing additional size fractions to below 35 pCi/g and, if so, at what rpm and retention time. These data will be used to calculate a volume reduction and will be recorded.

The second series of tests will evaluate chemical leaching effectiveness without an attrition scrubber. These tests will be conducted using various leach solution concentrations, retention times, and temperatures. The soil will be separated from the leach liquors and analyzed as described above.

Stage 2 - Physical/Chemical Testing

Stage 2 treatability testing incorporates the findings of Stage 1 physical separation and chemical extraction testing. The primary function of Stage 2 testing in the experimental design is to serve as a transition phase between Stage 1 testing and on-site Stage 3 testing. In this stage, tests will be conducted with equipment similar in scale to that used in the on-site testing system. These tests will be used to verify the performance of process units and to identify and resolve material processing issues.

Stage 2 testing will use the 500-pound batch samples of feed soil. These samples are composites of the individual aliquots which are representative of the soil as a whole and therefore, the batch soils are fully characterized. These batch samples will be mixed with the washing solution as defined in Stage 1 testing to form a thick slurry. The slurry will be delivered to a pilot-scale attrition scrubber at a rate consistent with the retention times defined in Stage 1 testing. The action of the slurry within the attrition scrubber will dislodge uranium particles and precipitate coatings from the sand- and silt-sized particles.

Upon exiting from the attrition scrubber, the slurry will be diluted and will pass over a vibrating screen (mesh size to be determined in Stage 1) and the "cleaned" soil fraction will be separated from the contaminated fine-grained material. The soil slurry will then enter a hydrocyclone sized to make an appropriate size cut. The underflow from the cyclone, plus the oversize from the vibrating screen will be dewatered and delivered to holding containers. An autosampling system will be used to collect representative soil samples for analysis. Again, laser phosphorimetry techniques will be used to determine if the coarse soil material meets the 35 pCi/g criteria and is able to be classified as "clean," if not, the soils will be diverted away from the "clean" soils and delivered to the melter 100 kg studies. The fine-grained soil fraction will be separated from the uranium-laden solution in the post-conditioning unit and aliquots of the process solution will be analyzed for uranium concentration. All process splits will be collected, split into aliquots, and analyzed for uranium concentration by laser phosphorimetry.

Additionally, selected duplicate aliquots will be analyzed at LAL to verify the findings of the in-house laser phosphorimeter. Those process splits which are found to be below 35 pCi/g release criteria will have TCLP tests performed on them to demonstrate that no hazardous components were added to the soils during the soil washing process.

SECTION B2
VITRIFICATION SUPPORT STUDIES

Soil wash concentrates (i.e., the contaminant-enriched fraction) from the laboratory studies will be shipped to VSL for use in the vitrification laboratory studies which will involve blending them with Pit 5 wastes. The vitrification study will be conducted in overlapping layers of increasingly large glass production rates. Data from ongoing OU-1 vitrification treatability studies will be used along with other relevant information to direct a composition variability study using crucible melts (about 500 g each). Suitable compositions will be tested on a 10 kg/day vitrification system and then progress to 100 kg/day system testing. Data from these tests will be used to finalize the design of the 300 kg/day system that will be installed at the FEMP. Major composition changes or other operating parameter changes will first be tested through the three laboratory scales before passing to on-site testing. This step approach is more efficient both in testing time and costs since both of these factors increase with the scale of the test.

The following sections provide a summary of the vitrification support studies.

B2.1 Chemical Characterization of Soil Fines

Soil will be separated into three fractions -- coarse, middle, and fine. Soil from the middle fraction will be fed to the melter by gravimetric means. Coarse and fine fractions will be leached, and the leachate will be sent to the water treatment.

B2.2 Vitrification Crucible Tests

A glass composition variability study will be designed for combinations of soil-wash concentrates, OU-1 sludges, and media from the water treatment system loaded with concentrated radioactive waste, with and without addition of chemical additives. At least twenty crucible melts, of about 500 g each, will be prepared on this basis and all of the glasses will be subjected to the glass characterization regimen outlined in Subsection 4.3.1.7. Approximately ten glasses will be made from combinations of soil-wash fines and OU-1 sludges, four from spent ion exchange media and OU-1 sludges, and five from all three waste streams, and one with OU-1 sludge and purchased sand. The OU-1 sludge and sand mix will be used as a basis to judge the other glass mixes.

B2.3 Joule-Heated Melter Tests - 10 kg/day

Based on the results of the glass composition variability study using crucible melts a series of feed compositions will be selected for the 10 kg/day joule-heated melter tests. Six such tests will be conducted in order to acquire detailed process data including throughput rates, cold cap formation,

foaming events, and off-gas characterization. At least one test will be carried out with a surrogate non radioactive feed.

B2.4 Joule-Heated Melter Tests - 100 kg/day

A melter capable of producing approximately 100 kg/day of vitrified waste will be installed at VSL. A total of four runs will be performed on the 100 kg/day melter vitrification system installed at Catholic University. The first two of these will use non-radioactive surrogate feeds for initial system tests. The second two runs will involve actual FEMP waste materials. These runs will provide the critical large-scale process data that will be necessary in the development of process controls and operating protocols for the 300 kg/day unit that will be installed at the FEMP. Process data will again include throughput rates, cold cap formation, and foaming events, as well as off-gas system performance evaluation. These data, collected on a series of units, will provide the basis for scale up to the larger pilot-scale and full-scale units if this approach proves to be optimal for the FEMP.

Laboratory vitrification activities will be directed toward the development of optimum compositions for vitrification of sludge/soil concentrate blends and definition of the operational process parameters. The characterization data obtained for the waste samples will be used for selecting the blends and calculating the raw-mix recipes. Previous experience and glass composition-property correlations that have been developed will be utilized while preparing these formulations. A further essential components is feed-back data from the glass characterization studies which will be used to refine the glass composition studies.

A flow diagram illustrating the sequential steps in glass preparation and glass characterization is shown in Figure A-2. As described previously, the MAWS program involves a stepwise scale up of the melter systems culminating in the 300 kg/day on-site unit. However, the general approach is as illustrated in Figure A-2.

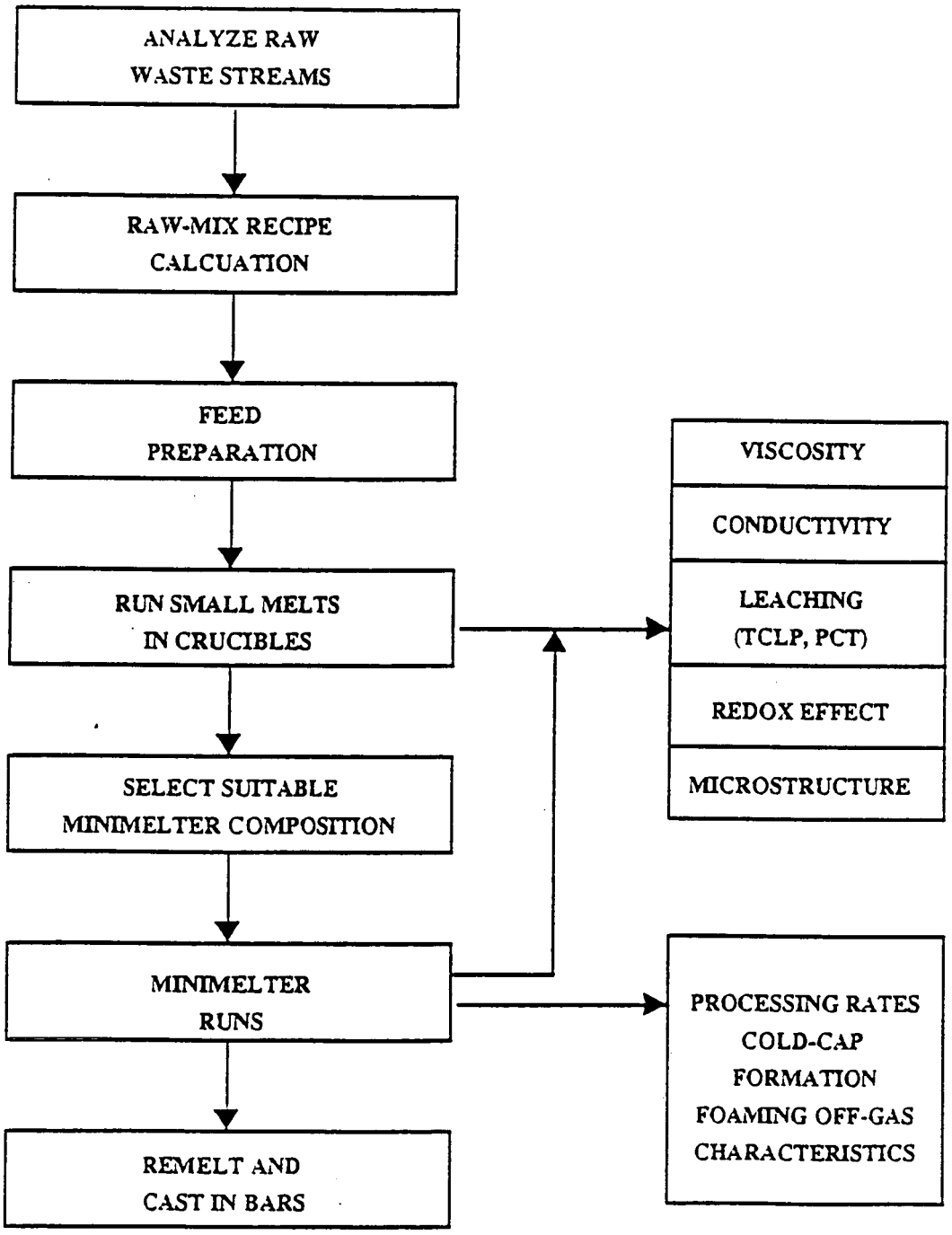

MAC\INLLUS\DATA\OU-1\MAWS GLASS PREP STEPS

Figure B-2 - Glass Preparation and Characterization Steps

APPENDIX C

STANDARD OPERATING PROCEDURES

Appendix C

CONTENTS

Attachment 1 - Leach System
Attachment 2 - Physical Separation System
Attachment 3 - Centrifuge Dewatering System

ATTACHMENT 1

LEACH SYSTEM

Revision: 01
Date: 02/23/93

OPERATING PROCEDURE

Leach System

1.0 PURPOSE AND SCOPE

1.1 The purpose of this standard operating procedure (SOP) is to instruct personnel in the operation of the leach system.

2.0 APPLICABILITY

2.1 This procedure applies to all Lockheed employees in all work activities involving the leach system.

3.0 RESPONSIBILITIES

3.1 The soil wash system supervisor is responsible for ensuring that all personnel assigned the task of leach operation are familiar with this SOP, that they have been trained in this SOP, and that a controlled copy of the SOP is available to them.

3.2 All personnel operating the leach system are responsible for following this SOP.

4.0 PROCEDURE

4.1 Equipment

1. leach feed tank and pump
2. 6 leach tanks
3. 3 volumetric feeders
4. 1 overflow tank
5. Miscellaneous piping and fittings

4.2 Process Description

As shown in the attached Leach Circuit diagram, the leach circuit is comprised of a Leach Feed Tank and six (6) Leach Tanks. Cyclone overflow discharges to the Leach Feed Tank, Reagents are introduced and metered to the Leach Feed Tank which react with the uranium causing it to dissolve. The slurry is then pumped at a controlled rate to No. 1 Leach Tank.

1. Operation of the leach feed tank

The leach feed tank is an open topped steel vessel, 4 feet in diameter by 6 feet high with a nominal capacity of 530 gallons. At the nominal flow rate of 8.8 gpm, it has an effective residence time of 48 minutes.

The purpose of the leach feed tank is to preheat slurry prior to leach and to provide buffer storage between the classification/washing circuit and the leach circuit. It will absorb surges in flow from both the upstream and downstream processes and thus allow for more continuous operation without accidental spills.

Solids suspension and slurry blending are provided by a top entering radial flow agitator powered by a 1/3 hp motor. The agitator motor is interlocked to the level probe to prevent its operation when slurry levels falls to approximately 10" above the turbine. The purpose of this interlock is to protect the agitator shaft from being damaged due to high out of balance forces when the agitator motion is not dampened by the slurry.

The slurry is heated using electrical heating wrap located on the side of the tank. Temperature is automatically controlled at 104°F.

The leach feed pump transfers slurry from the leach storage tank to leach tank No. 1. The pump is a Teel Model 3P551, 1.5" x 1.5" centrifugal type.

Operating Notes

The Leach Feed Storage Tank should require very little operating attention. However, the operator should take note of the normal mixing motion on the free surface so that he will recognize when problems occur. Problems may include

sanding or partial sanding of the tank, or an impeller becoming disengaged from the shaft.

Level and temperature control are performed automatically, however, these parameters must be checked periodically. Should the level control loop fail, the operator must closely monitor the tank level and make adjustments to the Leach Feed Pump accordingly.

2. Operation of Leach Tanks

There are six (6) leach tanks arranged so that slurry cascades by gravity from leach tank No. 1 to leach tank No. 2, etc., before exiting the leach circuit at leach tank No. 6. Each tank is a covered top steel vessel, 4 feet in diameter by 6 feet in height. At the nominal flow rate of 8.8 gpm, the leach circuit has a residence time of 4 hours.

The purpose of the leach tanks is to dissolve uranium in a solution containing sodium carbonate ($NaCO_3$) and ammonium bi-carbonate (NH_4CO_3). Potassium permanganate ($KMnO_4$) is also added as an oxidizing agent.

Leach reagents, ammonium bicarbonate (NH_4CO_3), sodium carbonate ($NaCO_3$) and potassium permanganate ($KMnO_4$) are metered into first leach tank.

The reagents used in the leach circuit must be carefully utilized to ensure safe and efficient operation. The reagent system consists of three (3) variable speed volumetric feeders complete with feed hoppers. Dry chemical is loaded into the hopper from where it is metered into the leach feed tank.

The leach reactions occur more quickly and to a greater degree at elevated temperatures. Slurry must therefore be maintained at a temperature of 104°F using electrical heaters.

Solids suspension and slurry blending are provided by a top entering radial flow agitator powered by a 1/3 hp motor.

Operating Notes

The leach tanks should require very little operating attention since automatic control loops maintain correct temperature and reagent addition. However, the operator should take note of the normal mixing motion on the free surface so that he will recognize when problems occur. Problems may include sanding or partial sanding of the tank, or an impeller becoming disengaged from the shaft.

All operating parameters must be checked periodically to ensure that automatic systems are functioning properly. Should the reagent control loop fail, the operator must closely monitor the REDOX potential and pH and make manual adjustments accordingly to the reagent feed rate settings.

3. Operating Parameters of Leach System

Feed Slurry Characteristics:

Particle Size	-	< 30 microns
% Solids	-	17%
Flowrate	-	8 gpm

Process:

Leach Temperature	-	104°F
Leach pH	-	8.5 - 9.5
Leach REDOX potential	-	500 mv
Leach Residence Time	-	5 hrs
Operating Schedule	-	continuous
% Extraction	-	99% +

Plant:

Number of Units	-	6
Leach Feed Tank Size	-	4' dia. x 6' Leach Feed
Tank Capacity	-	530 gallons (effective)

4.2 Start-Up Procedure for Leach Circuit

Start-up of the leach circuit is only allowed after verifying that the classifying/washing circuit is operating and that the centrifuge dewatering circuit is ready to start up.

1. Check the reagent systems to ensure adequate supply of reagents are present in each feed hopper and are ready to operate in automatic mode.

2. Visually inspect all items of equipment to ensure they are ready to operate. Specific checks of the following should be made:

   - all drain valves closed
   - no leakage
   - maintenance is not in progress
   - all personnel are clear of machinery

3. Observe the flow into the Leach Feed Tank. If the tank was empty prior to start-up, start the agitator when slurry has covered the impeller to a depth of approximately 10". Once the Leach Feed Tank is at normal operating level with the agitator running, start the Leach Feed Pump following these steps:

   a) Place the Leach Feed Tank level controller in AUTO
   b) Open the suction valve
   c) Open the discharge valve
   d) Start the Pump
   e) Ensure flow has been initiated.

Operating Notes

1. If you attempt to activate the agitator when slurry level is too low, an interlock will prevent its starting. Retry activation when slurry level rises.

2. A level control loop will maintain a constant level in the Leach Feed Tank by changing the valve position of the bypass valve. The valve position can be manually adjusted by setting the level controller to "Manual".

4. Observe the flow into Leach Tank No. 1. If the tank was empty prior to start-up, activate the agitator when slurry has covered the impeller to a depth of 10". Activate the heater. Start leach agitators and heaters in tanks 2 through 6 in succession as described above.

5. If the leach tanks were empty, it will take approximately 4 hours to completely fill the circuit. Verify that reagent feeders are operating.

4.3 **Sampling and Data Logging**

The following sampling and data logging procedures must be followed to ensure efficient operation of the plant.

1. Every hour, remove a sample from each leach tank using the sampler provided and place in a 100 ml beaker. Measure pH and REDOX potential using the EH/pH meter. Record these values in the log sheet.

2. Every, hour, cut a sample from the cyclone overflow using the sampler provided, determine the specific gravity of the slurry using a Marcy Density scale. Record these values in the log sheet.

   Take a further sample cut and place in a sample container which is clearly labelled with the date and time.

3. Every hour, cut a sampler from the No. 6 Leach Tank overflow stream as it discharges into No. 1 Centrifuge and place in a sample container which is clearly labelled with the date and time.

4.4 Reagent System

The leach operator is responsible for the correct operation of the reagent feeders and loading of hoppers as required to ensure a continuous supply of reagent.

Sodium Carbonate ($NaCO_3$)

Sodium Carbonate ($NaCO_3$) or "Soda Ash" is supplied in 50 lb bags and is stored in the chemical storage area (to be determined by Fermco). As required, $NaCO_3$ will be added to the $NaCO_3$ feeder.

Ammonium Bi-Carbonate (NH_4CO_3)

Ammonium Carbonate NH_4CO_3 is supplied in 50 lb bags and is stored in the chemical storage area (to be determined by Fermco). As required, NH_4CO_3 will be added to the NH_4CO_3 feeder.

Potassium Permanganate ($KMnO_4$)

Potassium Permanganate ($KMnO_4$) is supplied in 5-gallon drums and is stored in the chemical storage area (to be determined by Fermco). As required, $KMnO_4$ will be added to the $KMnO_4$ feeder.

4.5 Leach System Process Controls

$NaCO_3$ and NH_4CO_3 Addition

The addition of $NaCO_3$ and NH_4CO_3 is controlled by analyzing pH (acidity) of the slurry as measured in leach tank No. 2. The pH analyzer is located on top of leach tank No.

1. The normal operating setpoint is 9.0.

A controller compares the setpoint to the measured value and then increases or decreases the reagent addition rate.

$KMnO_4$ Addition

The addition of $KMnO_4$ is controlled by the REDOX potential of the slurry as measured in leach tank No. 2. The EH analyzer is also located on top of leach tank No. 1. The normal operating setpoint is 500 mv.

A controller compares the setpoint to the measured value and then increases or decreases the reagent addition rate.

Leach Feed Tank Level Control Loop

The Leach Feed Tank level is controlled by modulating a by-pass valve. Tank level is measured by an ultrasonic probe and compared to a setpoint. The by-pass valve opening is increased or decreased to maintain a constant level and thereby prevent the tank from overflowing or allowing the pump to run dry.

Successful operation of the leach circuit can be measured by the degree of dissolution of uranium usually expressed as a percent. A large number of external factors can affect the results obtained and include type and grade of soil, effective pretreatment, and particle size distribution.

Variables under control of the operator are as follows:

1. Addition rate of $NaCO_3$ and NH_4CO_3

   The target pH, as measured in Leach Tank No. 2 is 8.5 - 9.5. If the reagent consumption of soil being treated is high, pH can drop in Leach Tanks 2 through 5 giving poor extraction. The operator must therefore adjust the pH setpoint based on the pH as measured manually in the entire leach train.

2. Addition rate of $KMnO_4$

   The target EH is 500 MV, as measured in Leach Tank No. 2. If the soil being treated requires greater oxidation, slurry REDOX potential can drop as it progresses through the circuit giving poor results. As with pH control, the operator must be aware of the EH throughout the leach train and adjust the setpoint for EH control.

3. Temperature Monitoring and Annunciation

   The operator must ensure the temperature of the slurry is maintained at 104°F. Malfunctioning of heaters should be reported immediately. An annunciator/red light will light at control panel above leach feed tank and all leach tanks.

4.6 Shut-down Procedure

Temporary Shut-Down

Following any shut-down of the Classification/Washing Circuit the following steps should be followed to ensure an unhindered re-start of the Leach Circuit. This procedure should not be used for the final or emergency shut-down.

1. Stop the leach feed pump and switch the Leach Feed Tank level controller to "Manual".

2. Close the suction valve and attach a ½" fresh water hose to the flush connection. Open water to the hose. Open the valve on the flush connection located on the suction pipe.

3. Restart the pump on a manual speed setting of 50% and allow to run for 3 minutes or until clear water is observed flowing into Leach Tank No. 1.

4. Close the valves on the flush connection and on the hose (fresh water). Disconnect hose.

5. Place reagent feed controllers (3) on manual and turn off.

Extended Shut-Down Procedure

The following steps shall also be performed for a prolonged shut-down. Note that the centrifuge circuit must continue to operate during this procedure.

1. Once flow from the cyclone has ceased, place the Leach Feed Tank level control loop on manual and stop the agitator.

2. Start the Leach Feed Pump and use a hose to wash all solids from the tank. When only clear water is observed discharging into No. 1 Leach Tank, discontinue hosing and stop the pump.

3. Connect the drain valves of the adjacent leach tanks using a 2" flexible hose. Continue drawing slurry to centrifuge circuit until all tanks are empty. Hose any remaining solids from the tanks.

4. Stop the agitator when slurry falls to a level approximately 10" above the impeller.

5. Place all chemical feeders in MANUAL and turn off. This step prevents inadvertent addition of chemicals.

5.0 ENVIRONMENT SAFETY AND HEALTH

5.1 Requirements

All activities shall be conducted in accordance with applicable Lockheed and FEMP ES&H policies and procedures.

5.2 Personnel Protective Equipment (PPE)

Safety glasses, steel toed boots, anti C's, and chemical resistant gloves shall be worn by leach operators. While loading chemical feed hoppers (approximately once per day), the operator shall wear a dust/mist respirator and rubber gloves.

Personnel protective equipment shall be provided by FEMP.

6.0 RECORDS

6.1 Operating Parameters

Operating parameters shall be recorded on a regular basis as specified in Section 4.3 "Sampling and Logging." These records shall be maintained by the soil washing system operations manager.

6.2 Maintenance Log

A log shall be kept of the maintenance (both routine and repair) performed on leach system equipment. The record shall be maintained by the soil washing system operations manager.

6.3 Operating Log

The soil washing system operations manager shall keep all project logs. Additionally, weekly project activity and production reports serve as a record of gravity plant operations.

7.0 ATTACHMENTS

7.1 Leach Circuit Diagram

Figure 1. Leach Circut

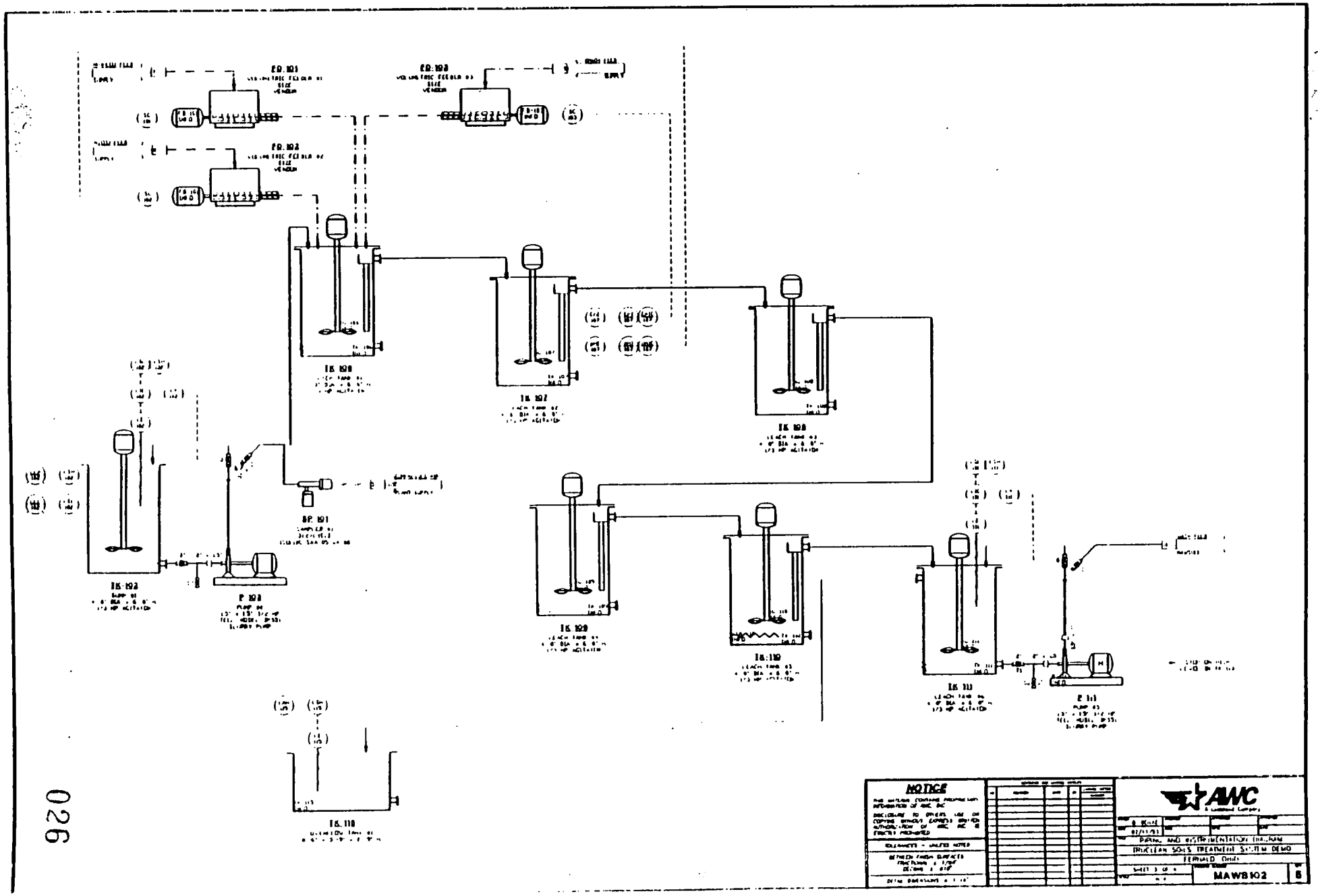

ATTACHMENT 2

PHYSICAL SEPARATION SYSTEM

Revision: 0

Date: 2/23/93

OPERATING PROCEDURES

Physical Separation System

1.0 PURPOSE AND SCOPE

1.1 The purpose of this standard operating procedure is to instruct personnel in the operation of the physical separation system.

2.0 APPLICABILITY

2.1 This procedure applies to all Lockheed employees in all work activities involving the physical separation system.

3.0 RESPONSIBILITIES

3.1 The soil wash system operations supervisor is responsible for ensuring that all personnel assigned to the task of centrifuge operations are familiar with this procedure, that they have been trained in this SOP, and that a controlled copy of the SOP is available to them.

3.2 All personnel operating the centrifuges are responsible for following this SOP.

4.0 PROCEDURE

4.1 Equipment and Supplies

1. Paddle mixer
2. Paddle mixer discharge tank and pump
3. Screw Conveyor
4. Triple deck gyratory screen
5. Flat double deck vibrating screen
6. Attrition scrubber
7. Double deck gyratory screen
8. Cyclone feed tank and pump
9. Two Hyrdocyclones
10. Soil collection drums

11. Drum handling equipment

4.2 Process Description

1. Paddle Mixer

The paddle mixer is used to mix soils and water for further processing. The primary purpose of the mixing is to break up clay lumps, wash soil from coarse particles (e.g., rock greater than 3/8 inch), and form a slurry of consistent density. The mixer is operated on a batch basis and can accommodate approximately four 55-gallon drums of soil. Water is added to achieve a 50% solids slurry. Slurry density is measured using a Marcy scale.

The soil slurry and coarse material are withdrawn from the mixer separately. These two streams are withdrawn separately to achieve an effective separation of organic matter (e.g., roots, grass, etc.). The slurry is withdrawn using a valve. The coarse material is withdrawn by raising one end to the mixer hydraulically and opening a hydraulically controlled gate at the end of the mixer.

2. Paddle Mixer Discharge Tank and Pump

Slurry is discharged from the paddle mixer into a tank at a controlled rate and is pumped via the vertical spindle pump to the triple deck gyratory screen. The design of the vertical spindle pump allows for dry operation.

3. Screw Conveyer

The screw conveyor transports coarse material from the mixer to the flat vibrating screen. The screw conveyor consists of a rotating screw and closed trough to contain the solids.

4. Triple Deck Gyratory Screen

Slurry is fed to the triple deck screen. Organic matter is caught as slurry passes through the 4#, 50#, and 100# 24" inch screens. The organic matter is fed, via gravity, into a drum and eventually fed to the vitrification process. The screen underflow is fed, via gravity, to the cyclone feed tank.

The screen gyrates and shakes on spring mounted and rubber insulated legs off the base. This action allows intertwined loose materials to free themselves of

each other and if of passable size fall through screen/filter. The action also causes the organics to be moved against the wall of screen tray and the organics tend to intertwine and rope themselves allowing the screen tray to maintain a balance of cleanliness over the screen area. The roped organics will mass until the bulk is tall enough to fall over the screen tray perimeter and into the open channel discharge into the soil collection drums.

5. Flat Deck Vibrating Screen

Coarse material is fed to the flat deck 3/8 inch screen via the screw conveyer. The greater than 3/8" material is fed, via gravity to drums and returned to FEMP for stockpiling. The less than 3/8" material is fed, via gravity, to an attrition scrubber for further washing.

6. Attrition Scrubber

The attrition scrubber is designed to remove surface films or coatings from individual soil grains, breaking up clays and cementations. In the attrition scrubber, soils are subjected to shear forces generated by opposing pitch impellers. The resulting currents of the soil causes soil grains to collide against each other, breaking up softer materials and removing coatings from harder grains.

7. Double Deck Gyrating Screen

The soil exiting the attrition scrubber is fed, via gravity, to a double deck 50 # and 100# 18 inch screen. The oversize material is fed to a 55-gallon drum. The undersized material is fed to the cyclone feed tank.

8. Cyclone Feed Tank and Pump

The cyclone feed tank consists of a 4' diameter x 6' steel tank complete with a 2 Hp radial flow agitator. The purpose of this tank is to receive screened slurry and act as a buffer storage prior to cyclone separation.

The cyclone feed pump is a horizontal centrifugal type pump. The purpose of this pump is to feed the cyclones. Pumping rate is controlled by a by-pass valve to maintain a constant flow-rate.

9. Hydrocyclone

Soil is pumped to the cyclone from the cyclone feed tank. The cyclone underflow is fed via gravity to a 55-gallon drum. The cyclone overflow is fed to the leach feed tank.

The hydrocyclone makes a size cut. This "cut point" is defined as a point where 50% of a particular size above the cut point will report to the underflow and 50% of a particle size will report to the overflow. Feed slurry enters the hydrocyclone tangentially under pressure. As a result of the high centrifugal forces, particles coarser that the "cut point" migrate into a primary vortex adjacent to the wall and move down toward the discharge spigot with a small volume of water. Particles finer than the "cut point" migrate into a secondary upward moving vortex in the center of the hydrocyclone and exit into vortex finder into the overflow spout.

10. Soil Collection Drums

The overflow from the gyratory and flat vibrating screens are fed, via gravity, into 55-gallon drums. The cyclone underflow is also feed, via gravity, to a 55-gallon drum. The volume of product in these drums must be monitored to prevent overflow.

11. Drum Handling Equipment

Drums will be moved using a forklift with a drum grappler attachment or manually operated drum handler.

4.3 Start-Up

1. Visually inspect all items of equipment to ensure that they are ready to operate. Specific checks of the following should be made:

- all drain valves are closed
- no leakage
- maintenance is not in progress
- all personnel are clear of machinery.

2. Ensure that all collection drums are in place and are empty.

3. Fill the mixer with 60 gallons of water per 55-gallon drum of soil.

4. Start the agitator mechanism.

5. Using the drum handler, dump one to four drums of soil into the mixer. There is a 3" grating on the mixer. Any oversize particles must either be forced through the grating of the mixer. If this is not possible, the oversize particles will be placed in a drum for stockpiling.

6. Allow the soil and water to mix for 15 minutes then remove a sample for density measurement. Should the density be above 50%, add water and resample after ten minutes.

   After 60 minutes, the soil will be thoroughly repulped and is ready for further processing. Stop the agitator mechanism.

7. Start the No. 1 gyratory screen and open water spray to the screen.

8. Start the Tank Pump.

9. Open the valve located on the mixer and allow slurry to flow at a controlled rate to the Tank pump. Continue draining the mixer making periodic adjustments to the mixer drain valve.

10. Ensure the Cyclone Feed Tank agitator is operating. Place the Cyclone Feed flow control to AUTO and start the Cyclone Feed Pump.

11. Once the mixer has drained, close the drain valve and start the screw conveyor, the flat vibrating screen, the attrition scrubber, and the screw conveyor. Open water to the screen sprays.

12. Open the gate valve located at the end of the mixer and discharge solids to the screw conveyor. Slowly raise the mixer to control the rate of discharge to the conveyor.

13. At all times monitor the volume of product in drums and replace when necessary.

14. The level of the Cyclone Feed Tank must be monitored to prevent overflow. If necessary, increase the flow rate set point of the Cyclone Feed Pumps flow controller.

4.4 Change-Out of Soil Collection Drums

1. Three soil collection drums must be monitored during operation of the physical separation system: cyclone underflow discharge drum; triple deck gyrating screen overflow discharge drum; and the flat vibrating and double deck gyrating screen overflow discharge drum.

2. The cyclone underflow discharge drum will be changed out approximately once every hour during operation. The following steps should be followed:

   a. When the drum is 3/4 full, turn off the cyclone feed pump.
   b. Remove the drum.
   c. Replace with an empty drum.
   d. Turn on the cyclone feed pump.

3. The triple-deck gyrating screen overflow drum will be changed out at the end of each batch discharged from the paddle mixer.

   a. At the end of each batch discharged from the paddle mixer turn off the slurry feed pump.

   b. Ensure that all material has passed through the screens.

   c. Remove the full drum.

   d. Replace with an empty drum.

4. The drum receiving coarse material from the flat vibrating screen and the double deck gyrating screen will need to be changed out at the end of every second batch.

a. At the end of every other batch ensure that all material has passed through the screens.

b. Remove the drum.

c. Replace with an empty drum.

4.5 Shut-Down

1. After each batch, the screens, screw conveyor, attrition scrubber, and tank pump can be stopped. The tank pump must be flushed with water prior to stoppage.

2. Clear all debris from the screens and shaker once stopped.

3. For extended shutdowns, wash out the mixer, screw conveyor and all screen underpans. Open the Attrition Scrubber drain valve and wash all solids.

5.0 ES&H

5.1 Requirements

The centrifuge dewatering system shall be operated in compliance with applicable Lockheed and FEMP ES&H procedures and policies.

5.2 Personnel Protective Equipment

Safety glasses, steel toed boots, anti C's, and disposable gloves (latex type) shall be worn by operators. Certain activities, such as handling drums will require additional PPE such as heavy leather gloves. Hard hats will also be required when drums are loaded into the paddle mixer.

6.0 RECORDS

6.1 Operating Parameters

Operating parameters such as density of feed to the cyclone and density of the slurry in the paddle mixer shall be recorded and logged.

6.2 Maintenance Log

A log shall be kept of the maintenance (both routine and repair) performed on the physical separation system. The log shall be maintained by the soil wash systems operations manager.

6.3 Operating Log

The soil wash system operations manager shall keep a daily operations log. Additionally, weekly project activity and production reports serve as a record of the centrifuge dewatering system.

7.0 ATTACHMENTS

7.1 Physical separation Circuit Diagram

Figure 1. Physical Separation Circut

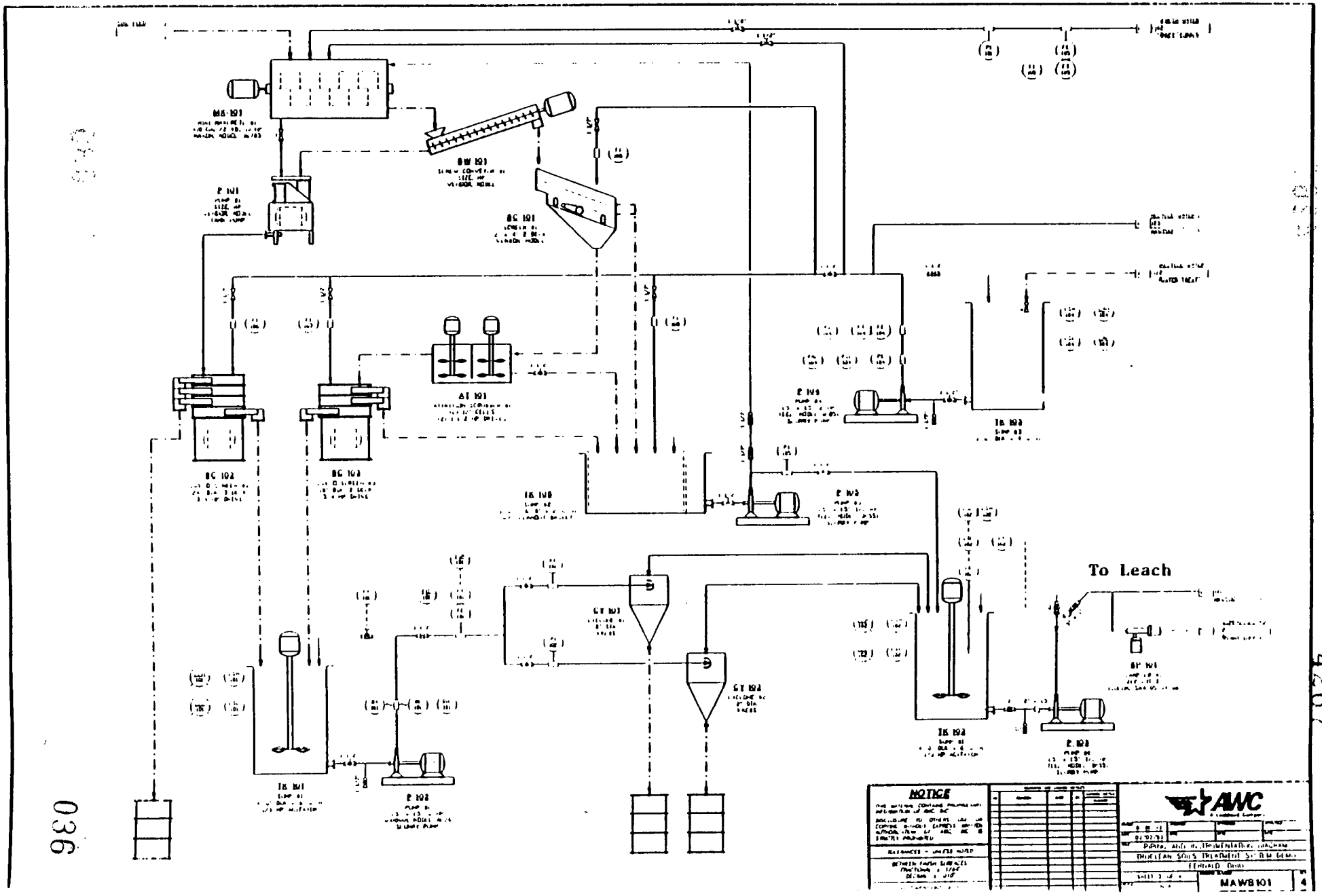

4267

036

ATTACHMENT 3

CENTRIFUGE DEWATERING SYSTEM

Revision: 0
Date: 02/23/93

STANDARD OPERATING PROCEDURE

Centrifuge Dewatering System

1.0 PURPOSE AND SCOPE

1.1 The purpose of this standard operating procedure is to instruct personnel in the operation of the centrifuge dewatering system.

2.0 APPLICABILITY

2.1 This procedure applies to all Lockheed employees in all work activities involving the centrifuge dewatering system.

3.0 RESPONSIBILITIES

3.1 The soil wash system operations supervisor is responsible for ensuring that all personnel assigned to the task of centrifuge operations are familiar with this procedure, that they have been trained in this SOP, and that a controlled copy of the SOP is available to them.

3.2 All personnel operating the centrifuges are responsible for following this SOP.

4.0 PROCEDURE

4.1 Equipment and Supplies

1. Three centrifuges
2. Three centrifugal pumps
3. Two repulp tanks
4. Water supply tank
5. Clean soil discharge drum
6. Miscellaneous Piping and Fittings

4.2 Process Description

The purpose of the centrifuge counter-current washing and dewatering system is to separate uranium bearing solution from solids and to wash the solids of residual uranium.

As shown in the attached centrifuge dewatering circuit diagram, the leached slurry is pumped from leach tank No. 6 by gravity pipeline to No. 1 centrifuge feed tank. Slurry is then pumped to No. 1 centrifuge where solids are separated from the liquid phase. Solids are discharged to No. 2 centrifuge feed tank and the uranium bearing solution flows to the pregnant solution tank.

In No. 2 centrifuge feed tank, solids from No. 1 centrifuge are repulped with solution from No. 3 centrifuge. The resultant slurry is pumped to No. 2 centrifuge where solids are once again separated from the liquid phase. Solids are discharged to No. 3 centrifuge feed tank and uranium bearing solution flows to the pregnant solution tank.

In No. 3 centrifuge feed tank, solids from No. 2 centrifuge are repulped with recycled(treated) water. The resultant slurry is pumped to No. 3 centrifuge for a final separation of solids from liquid. The leached and washed solids now should contain only low concentrations of uranium. Solution flows to No. 2 centrifuge feed tank.

1. Centrifuge Feed Tank

The Centrifuge Feed Tank is a conical bottom steel vessel 3 feet in diameter and 2'-9" high with a nominal capacity of 150 gallons. At the target flow rate of 8.8 gpm the tank provides a retention time of 16 minutes.

The purpose of the feed tank is to provide buffer storage for the centrifuge and, to repulp solids being discharged from the upstream centrifuge. Slurry mixing is provided by top entering radial flow agitators powered by 1/3 hp motors.

Operating Notes The centrifuge feed tanks should require very little operator attention. However, the operator should take note of the normal mixing motion on the free surface so that he will recognize when problems occur. Problems may include sanding, partial sanding or blockage of the feed by-pass lines.

2. Centrifuges

The feed slurry to be separated is introduced into the conveyor feed zone through an axially mounted feed tube. It then discharges from ports located around the periphery of the feed zone into the bowl.

As solids separate out of the slurry, they are carried by centrifugal force to the wall of the bowl. The solids are then moved along the bowl wall by the conveyor, up the incline or beach. The solids then discharge through ports into the casing.

Clarified liquid flows to the front of the bowl where it discharges through ports in the plate dam. This plate dam can be shifted in position to vary the depth of the liquid in the bowl (known as the "pond depth"). The dam positions are numbered. When the dam port carrying the highest number registers with the hub port, the pond is at its maximum depth.

The centrifuge consists of:

a) A bowl, rotated about a horizontal axis, in which a slurry may be subjected to centrifugal forces.

b) A screw conveyor, rotating about the same axis as the bowl but at a lower RPM, to move the sedimented solids to one end of the bowl for discharge through proper ports.

c) A casing which collects the discharge of solids from one end and liquid from the other end, and diverts them in separate streams away from the machine.

d) A frame which supports the bowl and casing assemblies.

e) A drive by which the bowl is rotated in a clockwise direction, as viewed from the pulley end, through "V" belts, from an outboard motor.

f) A gear box which is connected to the bowl hub opposite to the drive end, and drives the conveyor through a spline bushing at a speed lower than the bowl speed.

Provision is made to feed the slurry to be centrifuged into the bowl through an axial feed tube. Centrifugal force separates the slurry into its solid and liquid phases. The solids are sedimented against the bowl shell. The liquid level flows through openings in what is known as the "plate dam" into the casing.

Relative motion between the conveyor and the bowl produces a screw action within the bowl. This action conveys the separated solids to the end of the bowl opposite the liquid discharge. The conveyed solids then pass into the casing through the solids discharge ports.

On many applications a torque arm is mounted on the gear box pinion. This arm trips a torque control unit when the conveyor is overloaded or jammed. When the torque control trips, the conveyor rotates at the same speed as the bowl, preventing any material from being discharged. A microswitch is supplied which may be used to shut off the feed and actuate an alarm.

Successful operation of the Centrifuge Dewatering Circuit can be measured by the amount of dissolved uranium remaining in the solids produced by the circuit. To achieve low dissolved uranium values, the amount of moisture in the solids discharging from each centrifuge must be minimized. A number of uncontrolled factors such as particle size distribution will affect the ultimate moisture content. Variables under control of the operator are as follows:

Effect of Varying Pond Depth

The degree of sedimentation of solids which takes places in the centrifuge bowl for any specific application is a function of:

1. The average retention time of the liquid phase in the bowl, and,
2. The effective centrifugal force acting on the slurry.

These factors can be controlled, within limits, to obtain the optimum results by making certain adjustments to the Centrifuge.

The bowl is equipped with an adjustable plate dam which may be set to control the liquid holding capacity over a relatively wide range. The greatest pond depth in the bowl will result in the maximum clarification of the liquid discharge and the maximum entrainment of mother liquor in the solids discharge for any given a given slurry. (This is represented by the use of a dam port, carrying the highest number, which is nearest the axis.) Conversely, the shallowest pond depth in the bowl will result in a reduced clarification of the liquid discharge and the maximum dryness of the solids discharge for any given throughput rate of a given slurry. Therefore, if maximum clarifying efficiency is of prime importance and the free moisture content of the solid discharge is secondary, the deepest pond setting should be used. The shallowest pond setting is used when the maximum dryness of the solids discharge is of prime importance. For easily sedimented solids, a clarified liquid discharge and maximum dryness of solids may be possible at even the shallowest pond setting, at the required throughput rate, and at operating temperature.

Effect of Speed Variation

The centrifugal force of a centrifuge bowl is a function of the product of the bowl diameter and the square of the rotational speed (RPM). Since the diameter of the Centrifuge is fixed, the centrifugal force of the machine can be varied only by changing the rotational speed of the bowl. Normally, for clarification work, the maximum bowl speed is used; however, when it is desired to classify, that is, to remove solid particles over a specific size and density, and to retain the smaller particles in suspension in the liquid discharge, it may be necessary to reduce the bowl speed below maximum. This bowl speed reduction can be done by changing the driving motor pulley to one of smaller pitch diameter. This procedure should be carried out only by qualified maintenance personnel.

3. Centrifuge Product Drum

The discharge from the No. 3 centrifuge will be collected in a 55-gallon drum. This soil will be below the 35 pCi/gm engineering design goal for total uranium. The drum will have to be collected when full (approximately one every hour) and replaced with an empty drum.

4. Pregnant Solution Storage Tank

The Pregnant Solution Storage Tank is a 3'-8" x 2'-10" x 3'-7" high steel vessel with an effective volume of 250 gallons. At an expected inflow rate of 5.4 gpm, residence time is 16 minutes. Its purpose is to provide buffer storage between the Centrifuge Dewatering Circuit and the Water Treatment plant.

5. Pregnant Solution Pump

The Pregnant Solution Pumps is a 1.5" x 1.5" Teel model 3P552 horizontal centrifugal pump. Its purpose is to pump pregnant solution to the Water Treatment Plant.

6. Operating Parameters

Centrifuge Feed Tank

Number of Units	- One per centrifuge (3)
Feed Slurry Density	- 1.116, 17% solids
Feed Rate	- 8.8 gpm
Retention Time	- 16 minutes
Tank Volume	- 150 gallons
Tank Size	- 3' dia. x 2'9", conical bottom
Agitator	- Single radial flow, 1/3 hp

Centrifuge

Number of Units	- 3
Mode of Operation	- Countercurrent Wash
Feed Rate	- 8.8 gpm
Feed Slurry Density	- 1.116, 17% solids
Concentrate Flow	- 7.8 gpm
Solids Produced	- 753 lbs/hr
Moisture Content	- 20%

4.3 Start-up Procedure

Start-up of the Centrifuge Dewatering Circuit is allowed to operate after verification that the Leach Circuit is operating and there is sufficient volume available in the Pregnant Solution Tank.

1. Visually inspect all items of equipment to ensure they are ready to operate. Specific checks of the following should be made:

   - all drain valves closed
   - no leakage
   - maintenance is not in progress
   - all personnel are clear of machinery

2. Ascertain the level in the Centrifuge Feed Tanks. If the tanks are at normal operating level, omit the following step.

3. Fill No. 2 and No. 3 Centrifuge Feed Tanks to their normal operating level with water using the appropriate valves. Start the agitators.

4. Start each centrifuge using the following procedure:

   a) Hold the START button until the centrifuge reaches full speed.

   b) Press the RUN button to place overload heaters in the motor circuit.

5. Start each centrifuge feed pump beginning with No. 1 Centrifuge Feed Pump using the following procedure:

   a) Place all Centrifuge Feed Tank level controllers to AUTO.

   b) Open suction valves.

   c) Open the discharge valves.

   d) Turn pumps on.

   e) Observe the return or bypass flowing back into the Feed Tank to verify the pump is functioning properly.

6. Visually inspect the solids discharge from each of the centrifuges once steady state operation is established. If the product appears too wet, make adjustments (e.g., pond depth and speed variation) as described in Section 4.2.

4.4 Overload Release

The conveyor is protected from damage by means of an overload release mechanism which trips out at a predetermined torque limit on the conveyor. Several types of overload release mechanism are used, depending on the machine supplied. The standard mechanism is described below. If the machine is supplied with special equipment, such as backdrive or pressure transmitter assembly, the overload release mechanism is described in a supplementary bulletin supplied with the machine.

The operation of all types of overload release mechanisms depends on the principle that the force applied to the release mechanism is proportional to the load imposed on the conveyor when moving solids through the bowl. The standard overload release mechanism uses a torque arm which contacts a resilient pad on the torque lever. This lever operates a compression link which, in running position, is held against the stop pin by spring force between the male spring compression link and the torque control adjustment nut on the female spring compression link.

When an overload occurs on the conveyor, the torque arm will force the link upward. The torque arm will then rotate past the torque lever, and the conveyor will turn at the same speed as the bowl and will no longer move solids out of the discharge ports. In order that solids will not continue to accumulate in the bowl and become tightly packed, arrangement is made for the motion of the link to trip a limit switch, which is connected to cut off the feed. When such tripping occurs, proceed as follows:

a. Stop the centrifuge.

b. Turn the torque arm clockwise by hand to make sure the conveyor is not blocked by foreign material. If the arm turns without obstruction and the gear box does not rotate, reset the torque control by snapping the torque lever counter-clockwise until the link again resets against the stop pin.

Re-start the machine. The bowl will usually free itself of solids during the period of acceleration when centrifugal force is at a lower value than at full speed. If the torque lever does not trip under these conditions, it indicates that the solids have been cleared and the slurry feed can be turned on again.

If the conveyor is blocked, the gear box will rotate when the torque arm is turned clockwise by hand. If rotation of the gear box does not occur or if the torque arm trips out immediately following the return of the machine to service, the bowl will have to be cleaned.

4.5 Torque Control Adjustment

The torque setting should be accomplished as described below, by maintenance personnel:

a. Apply a 75-pound hand spring scale to the upper end of the torque lever. Pull on the spring scale and note the force required to trip the torque arm. Adjust the torque control adjustment nut to change this force. Repeat this procedure until the torque arm trips only at a force 5 pounds above maximum.

b. A stop nut pin locks the stop nut and prevents tightening beyond the maximum pound setting for the gear box.

c. If the torque lever trips at the maximum setting, operate at a lower speed.

d. Manually trip the torque arm snubber linkage at least once a week to insure that it will operate when needed.

e. Never block the torque mechanism in an attempt to prevent tripping out.

4.6 Process Control

Centrifuge Feed Rate

Centrifuge feed rate is controlled by the level in its corresponding feed tank through the modulation of a bypass valve located in the Centrifuge Feed Pump discharge pipe. This valve will open or close in response to changes in flow to the centrifuge dewatering circuit

allowing less or more slurry to flow to the centrifuge. This control loop will therefore prevent the feed tanks from overflowing or allow the pump to run dry.

Feed Density

Centrifuge feed density to No. 1 and No. 2 Centrifuge is not controlled automatically. The Classification/Washing Circuit operator must therefore ensure that a correct solid/liquid ratio is maintained in the cyclone overflow to prevent excessive flow of solution through the downstream operations.

No. 3 Centrifuge feed density is measured by a density gauge located in the No. 3 Centrifuge Feed Pump discharge pipe. A controller compares the measured value to a setpoint and then opens or closes an automatic water valve to maintain correct density in the feed tank.

Interlocks

Each centrifuge feed pump is interlocked to its corresponding centrifuge to prevent slurry being pumped to a non-operating machine.

To prevent overflowing of centrifuge feed tanks, the No. 1 and No. 2 centrifuge feed pumps and the leach feed pumps are interlocked to the level sensor of the tank they will directly affect. Should a pump fail to start, check to ensure that the level of a tank is not too high using the following interlock guide:

Pump	Tank Level Interlock
Leach Feed	No. 1 Centrifuge Feed
No. 1 Centrifuge	No. 2 Centrifuge Feed
No. 2 Centrifuge	No. 3 Centrifuge Feed

4.7 Sampling and Data Logging

1. Each hour, remove a sample from each of the centrifuge feed tanks using the sampler provided. Using a Marcy Density scale, determine the density of the slurry and record the results on the log sheet. (See procedure for use and calibration of a Marcy Density Scale.)

2. Each hour, take a sample from the No. 3 Centrifuge solid discharge and place it in a sample container. Clearly label the container with the time and date.

3. Each hour, take a sample of the pregnant solution from the discharge pipe at the Pregnant Solution Tank and place it in a sample container. Clearly label the container with the time and date.

4.8 Shut-down Procedure

Temporary Shut-Down

During a temporary shutdown due to lack of feed or a malfunction within the centrifuge circuit, all equipment can be left operating or alternatively the centrifuges can be stopped by pressing the OFF button on each machine. All pumps and agitators must remain in operation. Should a high tank level prevent the operation of a pump, by-pass the interlock and restart the affected pump. Ensure the interlock is reinstalled once normal operation commences.

Extended Shut-Down Procedure

Shut-down procedure for a prolonged stoppage is as follows:

1) Place the No. 6 Leach Tank level controller on manual and fully open the bypass valve. Open the flush valve to the No. 1 Centrifuge and flush for 2 minutes. Stop No. 1 centrifuge.

2) Place the No. 2 Centrifuge Feed Tank level control to MANUAL.

3) Close the bypass valve to 50%, stop agitator and observe the level in this tank. Continue closing valve by visually observing the flow and the tank level.

4) When the tank is almost empty, use a hose to completely wash down the tank. This action will also flush solids from pipelines and the centrifuge.

5) Stop the Centrifuge Feed Pump.

6) Stop No. 2 Centrifuge.

7) Perform steps a) through d) on No. 3 Centrifuge Feed Tank.

8) Restart No. 2 Centrifuge Feed Pump and run until tank is empty.

9) Stop No. 2 Centrifuge.

10) Stop No. 3 Centrifuge.

11) Open all pump suction drain valves.

12) Clean centrifuge bowl using the following steps:
- Lock out the centrifuge.
- Remove the belt guard and rotate the bowl forwards and backwards while flushing with water.
- Open the upper casing and flush out casing.

5.0 ENVIRONMENT SAFETY AND HEALTH

5.1 Requirements

The centrifuge dewatering system shall be operated in compliance with applicable Lockheed and Fermco ES&H policies and procedures.

5.2 Personnel Protective Equipment

Safety glasses, steel toed boots, anti C's, and disposable gloves (latex type) shall be worn by operators. Certain activities, such as handling soil collection drums will require additional PPE such as heavy leather gloves. Hearing protection (e.g., ear plugs or earmuffs) will also be required if noise levels exceed 85 dBA.

Personnel protective equipment shall be provided by Fermco.

6.0 RECORDS

6.1 Operating Parameters

Operating parameters shall be recorded as described in Section 4.7 "Sampling and Data Logging."

6.2 Maintenance Log

A log shall be kept of the maintenance (both routine and repair) performed on the centrifuge system. This log shall be maintained by the soil wash system operations manager.

6.3 Operating Log

The soil washing system operations manager shall keep a daily operations log. Additionally, weekly project activity and production reports serve as a record of the centrifuge dewatering operations.

9.0 ATTACHMENTS

9.1 Centrifuge Dewatering Circuit Diagram

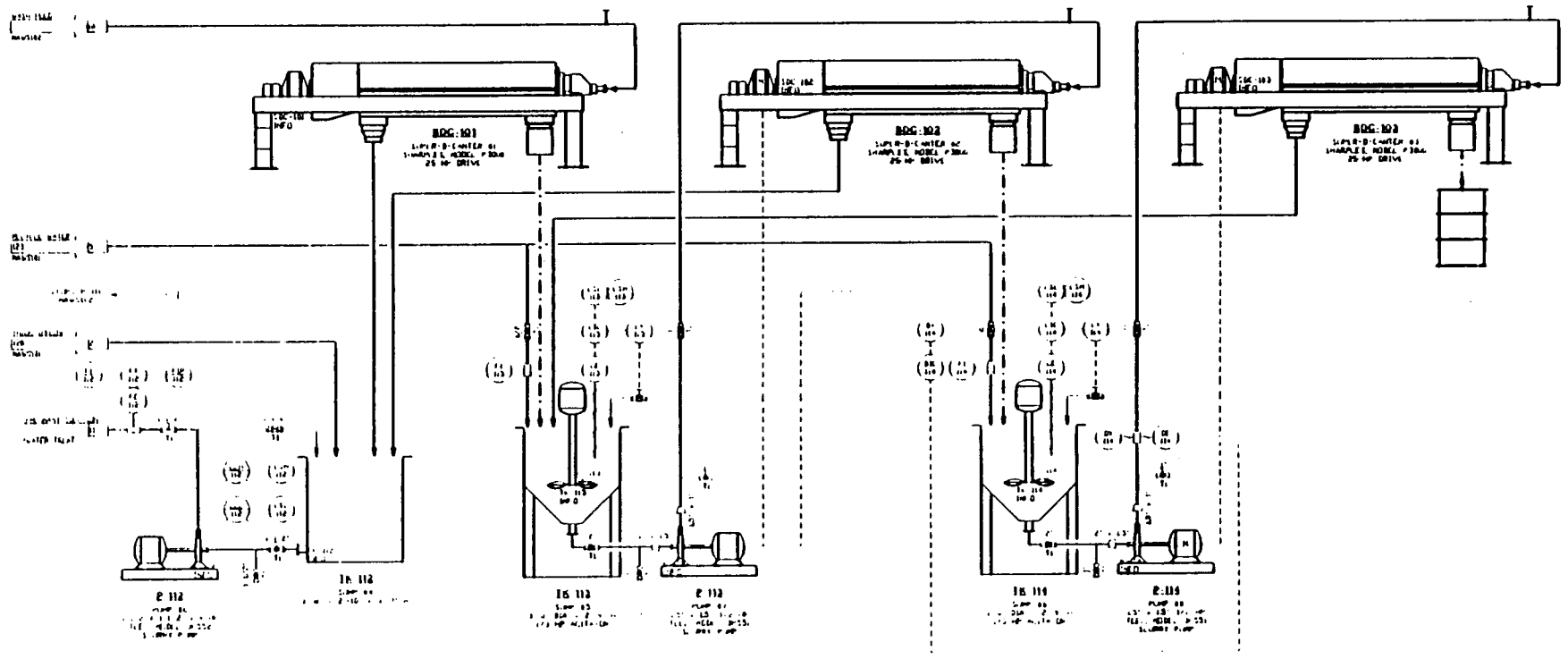

DECORDER A	DECORDER B
FIR 101 FIR 102 FIR 112	FIR 111 FIR 112B FIR 114B

051

4267

NOTICE

AWC

APPENDIX D

SAMPLING AND ANALYTICAL METHODOLOGIES

Appendix D

CONTENTS

Attachment 1 -	Particle Size Analysis and Thermogravimetric Analysis
Attachment 2 -	Kinetic Phosporescence Analysis
Attachment 3 -	Dry and Weigh
Attachment 4 -	Eh (Oxidation Potential)
Attachment 5 -	Direct Current Plasma (DCP), Inductively Coupled Plasma Mass Spectrometers (ICPMS), and Ion Exchange Chromatography (IEC)
Attachment 6 -	Toxicity Characteristic Leaching Procedure (TCLP)
Attachment 7 -	Product Consistency Test (PCT)
Attachment 8 -	Melt Viscosity and Scanning Electron Microscopy (SEM)
Attachment 9 -	Mossbauer Spectroscopy
Attachment 10 -	Melt Conductivity

ATTACHMENT 1

PARTICLE SIZE ANALYSIS AND THERMOGRAVIMETRIC ANALYSIS

UNCONTROLLED

VSL Technical Procedure

Title: Procedure for Characterization of Physical Properties and Carbon Content of Wastes and Glass

Document: TPI-FC

Issued: 10/92 Rev #1

Prepared by: Noel Balitactac Laboratory Manager	Gerardo Del Rosario Project Technician
Approved by: Pedro B. Macedo Co-Director, VSL	Ian L. Pegg Project Manager
	C. Sivaprakash Quality Assurance Officer, VSL

Procedure for Characterization of Physical Properties and Carbon Content of Wastes and Glass

Table of Contents

1.0 Purpose

2.0 Applicability

3.0 Safety

- 3.1 Hazards
- 3.2 Hazard Mitigation
  - 3.2.1 Identification of Hazards
  - 3.2.2 Handling and Storage of Chemicals
  - 3.2.3 Emergencies
- 3.3 Personnel Protection

4.0 Requirements

- 4.1 Training

5.0 Prerequisites

6.0 Operational Procedures

- 6.1 Thermogravimetric Analysis
- 6.2 Analysis of Carbon Content
- 6.3 Specific Gravity
- 6.4 Particle-Size Analysis

7.0 Specimen Control/Traceability

8.0 Record Keeping

9.0 References

10.0 Appendix

TPI-FC

1.0 PURPOSE

This procedure describes the characterization of feed materials such as soil, sludge or fly ash in terms of its thermogravimetric properties, carbon content, specific gravity and particle size distribution. This procedure also provides the means for obtaining verifiable, reproducible, documented data from all tests performed.

2.0 APPLICABILITY

This procedure applies to all VSL personnel trained and authorized to handle radioisotope-containing samples. Activities covered by this procedure include:

(a) Thermogravimetric analysis
(b) Analysis of total carbon or total organic carbon
(c) Specific gravity determination
(d) Particle-size analysis - sieving
(e) Sample accounting for traceability

3.0 SAFETY

3.1 Hazards

3.1.1 Chemical Hazards

The definition of a hazardous chemical is given in Section 8.3 of the CUA Chemical Materials Safety Manual, adapted from the OSHA Hazard Communication Standard. The CUA Chemical Materials Safety Manual is hereafter referred to as the CCMSM. This Standard and its application to CUA facilities are described in Sections 8.1 of the CCMSM with the exceptions noted in Section 8.28.

3.1.2 Radioactive Hazards

The radioactive isotopes present in the sample (sludge, soil or fly ash) are the source of radioactive hazard.

3.2 Hazard Mitigation

3.2.1 Identification of Hazards

The identification of chemical hazards should include an education program (Section 8.2 of the CCMSM). This program should include familiarization with the CCMSM as a whole, including the toxic properties of chemicals according to Sections

8.22, 8.23, 8.24 and 8.25 of the CCMSM, other hazards of chemicals classified under Sections 8.9, 8.10, 8.11, 8.12, 8.13, and 8.14 of the CCMSM, chemical handling and storage procedures (see paragraph 3.2.2 below), and emergencies (see paragraph 3.2.3 below). The education program will also include familiarization with the CUA Chemical Hygiene Program (CCHPP) when the document describing this Program is finalized and approved for distribution by the University.

Other elements of hazard identification include the proper use of labels (Section 8.4 of the CCMSM) and of Material Safety Data Sheets (Sections 8.25, 8.26, and 8.27 of the CCMSM). Workplace chemical lists should be compiled, maintained, and made available for employees in accordance with Section 8.31. In addition, a copy of the CCMSM should be kept in the laboratory and its use should be included in the education program cited above. The same should apply to the CUA Chemical Hygiene Program (CCHP) when the document describing this Program is finalized and approved for distribution by the University.

3.2.2 Handling and Storage of Chemicals

Handling of chemicals should be conducted according to Section 8.6 of the CCMSM. Storage of chemicals should follow Section 8.8 of the CCMSM. Special precautions should be taken in handling and storage of incompatible chemicals, solvents, compressed gases, and radioactive materials according to Section 8.10, 8.12, 8.13, and 8.14 of the CCMSM, respectively.

Waste disposal of hazardous chemicals should follow procedures established by the CUA Environmental Safety Office according to Section 8.16 of the CCMSM.

3.2.3 Emergencies

Chemical spills should be dealt with according to Section 8.17 of the CCMSM. Fire and fire-related emergencies should be controlled according to Section 8.21 of the CCMSM. Cases of personal contamination should be treated according to Section 8.19 of the CCMSM, cases of injury and illness according to Section 8.18, and cases requiring minor first aid according to Section 8.20.

3.2.4 Radioactive Hazard Mitigation

All rules for control and monitoring of personnel exposure and environmental radiation are described in Chapter 3 of the radiation safety manual of The Catholic

University of America. Application of these rules is the responsibility of each user working in the restricted area (rooms 37 to 40 of Hannan Hall) and the project managers, under the guidance of Dr. Warren E. Keene, Radiation Safety Officer of CUA.

3.3 Personnel Protection

Personnel protection from hazardous chemicals should consist of two elements. The first is familiarization and compliance with the instructions of the CUA Chemical Materials Safety Manual (CCMSM), including identification of hazards (see paragraph 3.2.1 above), handling and storage of chemicals (see paragraph 3.2.2 above), and dealing with emergencies (see Paragraph 3.2.3 above). The second element is familiarization and compliance with the CUA Chemical Hygiene Program (CCHP) when the document describing this Program is finalized and approved for distribution by the University. The overall chemical hygiene program (section 8.34 of the CCHP), based on the OSHA Regulation on Occupational Exposure to Hazardous Chemicals in Laboratories, should be followed. In detail, exposure reduction measures (Section 8.35 of the CCHP) will include environmental monitoring (8.35.1), inspections, maintenance and housekeeping (8.35.2), use of protective apparel and equipment (8.35.3), posting of signs and labels (8.35.4) and dealing with accidents and spills (8.35.5). Ventilation of both general laboratory spaces and of special areas and local devices such as chemical fume hoods and glove boxes should follow the instructions of Section 8.36 of the CCHP. Employees should take part in the safety information and training program which exists in the University according to Section 8.37 of the CCHP, and should be informed about the medical program provided by the University in cases of work with hazardous substances according to Section 8.39 of the CCHP. Responsibility for chemical hygiene rests with all employees.

In addition to compliance with the general instructions described in the CUA radiation safety manual, the following rules apply to the protection of personnel working in the restricted area of the Vitreous State Laboratory:

1) All personnel working in the restricted area shall routinely undergo radiation safety training given by the radiation safety officer of CUA or in off-campus courses approved by the CUA RSO (see Section 4.1).

2) The restricted area should remain locked and only workers assigned to this area and project managers should have access to this section. All other persons who need temporary access to the radioactive laboratory shall be accompanied by authorized personnel.

3) Film badges shall be worn by operation personnel upon entering the restricted area. Ring badges and disposable gloves shall be worn when handling radioactive material.

4) Shoe covers are to be worn in the melter room at all times.

5) Any radioactive spill must be cleaned up immediately, checked after cleaning with a survey meter, and the radiation safety officer shall be notified as soon as possible so that wipe tests may be performed. Immediately notify RSO of any unenclosed spills greater than about 100 ml.: phone x 5206, home (703) 671-1659.

6) All samples shall be labeled with sample name, date and notebook/page of record indicating sample preparation. All new materials shall be entered into the inventory control file. Any material not in current use must be returned to the storage area in Room 40.

7) Respirators are to be worn as backup protection for operations involving the possible release of contaminated dust.

8) Repairs to equipment involving hazardous operations should not be performed unless under the direction and in the presence of one or more of the following: R. Mohr, H. Hojaji, I. Muller, W. Keene, P.B. Macedo. If alone and a hazardous situation occurs do only what is necessary to prevent a further hazard, and report the problem promptly to your supervisor.

Refer to previous section 3.2.3 for emergency response. Notify Bob Mohr (202) 234-5953, Hamid Hojaji (301) 365-0999, Isabelle Muller (703) 534-5420 or Pedro Macedo (301) 229-0408 to obtain assistance. Notify Campus security and or the fire department of fire or serious accident. Security, x 5111. Fire and emergency, dial 9 for outside line, then 911.

4.0 REQUIREMENTS

4.1 Training

All radioactive restricted area workers shall be trained both by the laboratory supervisor regarding their specific duties and by the CUA radiation safety officer.

Documents 10CFR19 and 10CFR20 are available to all restricted area workers. Each restricted area worker must attend a course in radiation safety given by or approved by the CUA RSO.

Training on each technical method and equipment used in radioactive counting is given by the laboratory supervisor and/or by a trained and experienced person designated by the laboratory supervisor until the technician shows competence to use that method without direct supervision.

5.0 PREREQUISITES

5.1 Equipment/Materials List

Thermogravimetric Analysis:

QTY	EQUIPMENT/MATERIAL	MANUFACTURER/MODEL
1	Furnace	Deltech/DT-28-12
1	Furnace	Deltech/DT-28-06
1	Laboratory box furnace	Neytech
1	Balance, 100g	Sartorius/B120S
1	Balance, 1.2kg	Mettler/PL1200
1	Crucible, Pt-Au, 430g	
1	Crucible, Inconel, 500g	
	Fireclay crucibles, 400g	
	Fireclay crucibles, 1.4kg	
	Disposable latex gloves or	
	Disposable vinyl gloves	
	Desiccator	
	Crucible tongs	
	Green goggles	
	Glovebox	

Carbon Content Analysis:

QTY	EQUIPMENT/MATERIAL	MANUFACTURER/MODEL
1	Total organic carbon analyzer	Dohrmann/DC-80
1	Boat sampling module	Rosemount Analytical/183
3	Platinum boat, P/N 511-793	Rosemount Analytical
1	Stopwatch/Timer	
	Soap film bubble meter	
	Tweezers	
	20mL Glass or polystyrene vials	
	250mL Amber bottles	
	Spatula	
	Mortar and pestle, Diamonite	
	Quartz wool	
	Oxygen gas cylinder	

Note: Refer to the ASTM procedures in the appendix for the rest of the apparatus/equipment required in the specific gravity and particle-size analysis. For the calibration of the above listed equipment refer to the prerequisites section of the Glass Preparation and Minimelter procedure, TPI-GP.WVN.

6.0 Operational Procedures

6.1 Thermogravimetric Analysis of Soils, Sludges and Fly Ash

Note: The analysis should normally be performed in a platinum crucible (Pt-Au or Pt-Rh) but clay or inconel crucibles may be used at the direction of the Project Manager. If using a platinum crucible, ensure that no metallic objects come into contact with the hot crucible.

1. Sampling

Soil and fly ash are sampled by the method of quartering. Spread out the contents of the soil or fly ash from its bucket on a large plastic sheet

(obtain approval from Project Manager whether this can be done outside or inside the glovebox or laboratory hood, if outside the glovebox, wear the proper mask to avoid inhalation of hazardous particles), mark off quarters, and take scoop-fulls from each quarter collecting the desired sample volume. The samples obtained may contain large rocks, stones, soil aggregates, roots or vegetation. Consult the Project Manager whether these components are to be included or discarded from the samples for analysis.

For sludges, thoroughly mix the sludge in the drum until homogeneous to ensure that a representative sample is taken.

2. Weigh a clean dry crucible and record the weight in laboratory notebook, VSL #289-92.

3. Place crucible into a plastic bag, pass into glovebox and transfer into it the soil, sludge or fly ash to be analyzed.

4. Remove the crucible with sample from the glovebox, weigh and record the weight. Calculate the weight of the total sample removed and record this value in its corresponding "Daily Removal/Treatment and Chain-of-Custody Record", (Form VSL #19) compiled in laboratory notebook VSL #328-92.

5. Place the crucible with the sample into a furnace.

6. Drying of the samples is done in stages given in the table below unless otherwise specified by the Project Manager.

Temperature	Drying Time
110°C	18 hrs
450°C	4 hrs
850°C	4 hrs
1150°C	4 hrs

7. At each drying stage,

   (a) Set the furnace to the selected temperature and hold for the specified period of time.

   (b) At the conclusion of each drying time, shut off the furnace and allow the sample to cool inside the furnace.

   (c) When the furnace has cooled to around 200°C, (except for the first stage) remove the sample from the furnace and place in a desiccator to cool to room temperature.

   (d) Remove the sample from desiccator, weigh, and record the total mass of dry sample plus crucible.

   (e) Calculate and record the percent weight loss of the sample after drying.

8. After each drying stage, it may be necessary to take a sample of the dried material for analysis, e.g. 5 grams for chemical analysis, (per instruction of Project Manager). In this case, weigh and record the final mass of sample plus the crucible before proceeding to the next drying stage.

9. After completing the last drying stage, the dried material is transferred from the crucible to a clean sealable plastic jar and label indicating sample name (see section 7.0 below), and reference VSL Laboratory Notebook Number.

6.2 Analysis of Carbon Content

The measurement of the carbon content of sludge, flyash or soil samples is done using the Dohrmann DC-80 Carbon Analyzer attached with the 183 Boat Sampling Module (BSM). This system is capable of measuring the total carbon (TC), total organic carbon (TOC), and the inorganic carbon (IC) contents of wastewater, slurries, sludges and solid samples. Refer to the DC-80 Carbon Analyzer Equipment Manual and the Operation Manual of the Boat Sampling Module for additional information on the features and operation of the system.

1. Start-up and calibration

Before attempting operation, verify and check the following:

- the IR detector has been on for at least 2 hours, for temperature stabilization. Ultimate stability is attained after 24 hours.

- the carrier gas (oxygen) is flowing at the detector "out" port in the range of 180-220 mL/min. This is checked using a soap film bubble meter. See Appendix E, page 10-1 of the DC-80 Manual.

- the TOC/POC mode switch on the DC-80 unit is in the TOC position.

- the detector/ppm switch on the DC-80 unit is in the ppm position.

- the disperser at the bottom of the sparger of the BSM is well submerged in acidified (with phosphoric acid, to pH 2) deionized water.

- the mist trap of the BSM should not be more than half filled with water. Empty out if necessary.

- inspect the tin/copper scrubber for presence of water. Replace if necessary.

(a) Turn on the combustion furnace of the Boat Sampling Module (BSM) by switching the power on located on the front panel of the module. Wait for about 15 minutes for furnace to stabilize at 800°C, factory preset temperature.

(b) Turn on the white power switch of the DC-80 unit. The readout will display "----" (indicates no printer connected) and the red indicator (error) is lit. Pressing the start button twice clears the readout to 0.0000 and lights up the green (ready) indicator.

(c) When the green LED indicator on the front panel of the BSM becomes lit, the furnace is stable at about 800°C. (Verify this temperature by following the test procedure specified on page 5 of the BSM Operation Manual).

(d) With the furnace at the desired operating temperature, advance the platinum boat into the furnace to bake for about 2 minutes. This eliminates any

carbonaceous material residing in the boat. Then, retract the boat until it is at the hatch port.

(e) Place tufts of quartz wool in the sample boat, then bake as described in step d. The wool helps promote even vaporization of sample while in the furnace.

(f) Calibrate the system by injecting 40 uL of Potassium Hydrogen Phthalate ($C_8H_5O_4K$, KHP) standard containing 2000 ppm C. This standard is prepared by dissolving 425 mg of KHP in 100 mL deionized water and 0.1 mL of concentrated phosphoric acid (refer to Appendix A, page 6-1 of the DC-80 Manual). Record this calibration data in logbook VSL #329-92.

2. Sample pretreatment

a) Samples containing particulates, such as slurries and suspensions, must be treated for the solids to pass through the needle of the syringe or the tip of a micropipette (consult the Project Manager if the particulates are to be included in the analyses). When the particulates must be included in the analyses, pulverize the sample using a mortar and pestle, or a Tissuemizer or any kind of homogenizer, if available. Samples which can not be pulverized must be analyzed as solid samples. After homogenization, proceed to acidify the sample.

b) For solid samples, pulverization results in greater homogeneity which allows efficient vaporization of the sample in the furnace. Weigh about 50 mg of the pulverized sample and add in 5 mL of deionized water in a 20 mL vial. Thoroughly mix the solution, then proceed to acidify the sample.

c) Acidify the sample with a few drops of concentrated phosphoric or sulfuric acid to pH 2-3, if analyzing for TOC. (For TC analyses, no acidification is necessary. Proceed to sample analysis.)

d) Sparge the acidified sample for 6 minutes in the sample sparging station of the BSM.

3. Sample analysis

a) Check the system calibration by injecting 40uL of 2000 ppm C KHP standard. Recalibrate the system if necessary. (Refer to page 3-5 to 3-9 of the DC-80 Manual).

b) Situate the sample boat at the hatch port.

c) Lift the hatch and transfer the sample to the boat using a micropipette or syringe. (Samples can also be transferred via the septum syringe port of the race tube near the hatch port.) Ensure complete transfer of sample from the syringe or micropipette by touching the needle or pipet tip to the quartz wool. If the boat was recently retracted from the furnace, allow at least 30 seconds for cooling before injecting the sample into it.

d) Close the hatch and wait for 1-2 minutes to allow detector baseline to stabilize.

e) Press the START button of the DC-80 unit and advance the boat into the furnace at about 2 inches per second.

f) Wait 2-8 minutes for the analysis to finish. When the detector signal is essentially back to original base line, the analysis terminates automatically and a beeping sound is activated. If the red (error) light did not come on, the analysis is successful. Record the reading on the display panel in logbook VSL #329-92. If the red light comes on, the analysis is erroneous. Refer to pages 3-9 and 3-10 in the DC-80 Manual for comments on error messages.

g) Retract the boat back to the hatch port when the analysis is finished. Allow the boat to cool down for at least 30 seconds before injecting another sample.

h) Do at least 5 trials per sample.

i) Correct the panel reading given in ppm C (by volume) to ppm C (by weight) in solid samples by correlating the amount of carbon and the concentration of the standard used in the calibration, to the reading obtained on a known weight of sample. (Refer to the sample calculation on pages 9 and 10 of the BSM Operation Manual).

j) Calculate the average of the corrected values and the standard deviation. Record all results in logbook VSL #329-92.

6.3 Specific Gravity

The specific gravity of soil, sludge and fly ash is determined by following ASTM D854-83 - Standard Test Method for Specific Gravity of Soils (see Attachment III

in the Appendix). To determint the specific gravity of glass, the glass sample is crushed to pass No. 10 (2.00 mm) sieve, and then ASTM D854-83 followed.

6.4 Particle Size Analysis

Particle size analysis of soil, sludge and fly ash is done using the ASTM D422-63 - Standard Test Method for Particle-Size Analysis of Soils, and ASTM D421-85 - Standard Practice for Dry Preparation of Soil Samples for Particle-Size Analysis and Determination of Soil Constants (see Attachments II and I, respectively, in the Appendix).

7.0 Specimen Control/Traceability

Thermogravimetric Analysis: When a sample of sludge is taken from the drum or soil or fly ash is taken from its bucket for thermogravimetric analysis, the sample removed is recorded in their corresponding "Daily removal/treatment and chain of custody form", (Form VSL #19), compiled in the loose leaf binder, VSL #328-92. This sample removal is also documented in the users laboratory notebook, VSL #289-92 or VSL #300-92. After undergoing the final drying stage, the dried material is transferred to a container with a label indicating its sample name and the process the sample underwent. For example, FE1-D450 in the label, will stand for:

FE1 - Fernald Pit 5
D1150 - D for Dried, 1150 for 1150°C drying temperature

The label will also include the reference VSL laboratory notebook number and page where the process was recorded. This container with the dried sample is stored in the Fernald processed sample storage area temporarily located in room 39.

Carbon Content: All samples for analysis of carbon content (TOC or TC) will be logged in the logbook VSL #329-92 with a description of the sample, name, originator and its reference VSL laboratory notebook #. Any pretreatment process that the sample undergoes e.g. grinding or pulverization, or dissolution in water, shall be recorded in the logbook and the processed samples shall be labeled to reflect its name and reference logbook (VSL #329-92) and page number. All leftover and processed samples are saved and stored temporarily near the Dohrmann Carbon Analyzer while the originator or the responsible

person is notified. All samples are to be returned to the originator who must sign out the samples in the log book, VSL #329-92.

Specific Gravity: Sampling of materials for specific gravity test and its documentation is the same as stated above. Processed samples are not saved and are directly disposed of to a Fernald waste container.

Particle Size Analysis: Sampling of materials for particle size analysis and its documentation is the same as stated above. After sieving the samples, the fractions retained and passing each of the sieves used are collected and placed in a container with a label indicating the sample name and the sieve used, FEa-Sbxxx (a=1 for Pit 5, 2 for Pit 6, 3 for Clearwell, 4 for Fly ash RMIC 877, and 5 for Fly ash RMIC 878. For soils, FEa is replaced with their RMIC #. b=P for fraction passing, R for fraction retained; xxx=the mesh or sieve number.) For example, FE1-SP200 in the label will stand for:

FE1 - Fernald Pit 5
SP200 - Sieved Passing #200 mesh size sieve

or 815-SR10

815 - Fernald Soil with RMIC #815
SR10 - Sieved Retained at #10 mesh size sieve (passed the next coarser sieve used in the analysis)

The label has to include the reference laboratory notebook VSL # and page where the process was recorded. The samples generated from particle size analysis are stored in the Fernald processed samples storage area temporarily located in room 39.

8.0 Record Keeping

The following is a list of laboratory notebooks and forms currently in use where all data and activities pertaining to all of the analyses performed on Fernald samples described above are recorded.

1. VSL #289-92 - Thermogravimetric analysis
2. VSL #300-92 - Specific gravity and particle size analysis

3. VSL #328-92 (Loose Leaf Binder) - Daily Removal/Treatment and Chain-of-custody record
4. VSL #329-92 - Carbon content (TOC/TC) analysis logbook
5. VSL #306-92 - Gamma counting record
6. VSL #305-92 - Detector calibration record
7. VSL #326-92 - Sample for radioactive counting logbook
8. VSL Form #19 - Daily Removal/Treatment and Chain-of-custody form

9.0 References

1) Radiation Safety Manual of the Catholic University of America; Warren Keene, RSO, Washington, DC, January 1992

2) 1991 Annual Book of ASTM Standards, Section 4, Volume 04.08, ASTM Philadelphia, PA, 1991

3) Dohrmann DC-80 Total Organic Carbon Analyzer Equipment Manual, Edition 11, July 1986, P/N 915-121

4) Installation and Operation of the 183 Boat Sampling Module, Rosemount Analytical Inc., P/N 915-240, January 1991

10.0 Appendix

List of Attachments

Attachment I - ASTM D421-85 - Standard Practice for Dry Preparation of Soil Samples for Particle-Size Analysis and Determination of Soil Constants.

Attachment II - ASTM D422-63 - Standard Test Method for Particle-Size Analysis of Soils.

Attachment III - ASTM D854-83 - Standard Test Method for Specific Gravity of Soils.

OK

Standard Practice for Dry Preparation of Soil Samples for Particle-Size Analysis and Determination of Soil Constants[1]

This standard is issued under the fixed designation D 421; the number immediately following the designation indicates the year of original adoption or, in the case of revision, the year of last revision. A number in parentheses indicates the year of last reapproval. A superscript epsilon (ε) indicates an editorial change since the last revision or reapproval.

1. Scope

1.1 This practice covers the dry preparation of soil samples as received from the field for particle-size analysis and the determination of the soil constants.

1.2 *This standard may involve hazardous materials, operations, and equipment. This standard does not purport to address all of the safety problems associated with its use. It is the responsibility of whoever uses this standard to consult and establish appropriate safety and health practices and determine the applicability of regulatory limitations prior to use.*

2. Referenced Documents

2.1 *ASTM Standards:*

D 2217 Practice for Wet Preparation of Soil Samples for Particle-Size Analysis and Determination of Soil Constants[2]

E 11 Specification for Wire-Cloth Sieves for Testing Purposes[3]

3. Significance and Use

3.1 This practice can be used to prepare samples for particle-size and plasticity tests where it is desired to determine test values on air-dried samples, or where it is known that air drying does not have an effect on test results relative to samples prepared in accordance with Practice D 2217.

4. Apparatus

4.1 *Balance*, sensitive to 0.1 g.

4.2 *Mortar and Rubber-Covered Pestle*, suitable for breaking up the aggregations of soil particles.

4.3 *Sieves*—A series of sieves, of square mesh woven wire cloth, conforming to Specification E 11. The sieves required are as follows:

No. 4 (4.75-mm)
No. 10 (2.00-mm)
No. 40 (425-μm)

4.4 *Sampler*—A riffle sampler or sample splitter, for quartering the samples.

5. Sampling

5.1 Expose the soil sample as received from the field to the air at room temperature until dried thoroughly. Break up the aggregations thoroughly in the mortar with a rubber-covered pestle. Select a representative sample of the amount required to perform the desired tests by the method of quartering or by the use of a sampler. The amounts of material required to perform the individual tests are as follows:

5.1.1 *Particle-Size Analysis*—For the particle-size analysis, material passing a No. 10 (2.00-mm) sieve is required in amounts equal to 115 g of sandy soils and 65 g of either silt or clay soils.

5.1.2 *Tests for Soil Constants*—For the tests for soil constants, material passing the No. 40 (425-μm) sieve is required in total amount of 220 g, allocated as follows:

Test	Grams
Liquid limit	100
Plastic limit	15
Centrifuge moisture equivalent	10
Volumetric shrinkage	30
Check tests	65

6. Preparation of Test Sample

6.1 Select that portion of the air-dried sample selected for purpose of tests and record the mass as the mass of the total test sample uncorrected for hygroscopic moisture. Separate the test sample by sieving with a No. 10 (2.00-mm) sieve. Grind that fraction retained on the No. 10 sieve in a mortar with a rubber-covered pestle until the aggregations of soil particles are broken up into the separate grains. Then separate the ground soil into two fractions by sieving with a No. 10 sieve.

6.2 Wash that fraction retained after the second sieving free of all fine material, dry, and weigh. Record this mass as the mass of coarse material. Sieve the coarse material, after being washed and dried, on the No. 4 (4.75-mm) sieve and record the mass retained on the No. 4 sieve.

7. Test Sample for Particle-Size Analysis

7.1 Thoroughly mix together the fractions passing the No. 10 (2.00-mm) sieve in both sieving operations, and by the method of quartering or the use of a sampler, select a portion weighing approximately 115 g for sandy soils and approximately 65 g for silt and clay soil for particle-size analysis.

8. Test Sample for Soil Constants

8.1 Separate the remaining portion of the material passing the No. 10 (2.00-mm) sieve into two parts by means of a No. 40 (425-μm) sieve. Discard the fraction retained on the No. 40 sieve. Use the fraction passing the No. 40 sieve for the determination of the soil constants.

[1] This practice is under the jurisdiction of ASTM Committee D-18 on Soil and Rock and is the direct responsibility of Subcommittee D18.03 on Texture, Plasticity, and Density Characteristics of Soils.

Current edition approved July 26, 1985. Published September 1985. Originally published as D 421 - 35 T. Last previous edition D 421 - 58 (1978)[ε1].

[2] *Annual Book of ASTM Standards*, Vol 04.08.

[3] *Annual Book of ASTM Standards*, Vol 14.02.

The American Society for Testing and Materials takes no position respecting the validity of any patent rights asserted in connection with any item mentioned in this standard. Users of this standard are expressly advised that determination of the validity of any such patent rights, and the risk of infringement of such rights, are entirely their own responsibility.

This standard is subject to revision at any time by the responsible technical committee and must be reviewed every five years and if not revised, either reapproved or withdrawn. Your comments are invited either for revision of this standard or for additional standards and should be addressed to ASTM Headquarters. Your comments will receive careful consideration at a meeting of the responsible technical committee, which you may attend. If you feel that your comments have not received a fair hearing you should make your views known to the ASTM Committee on Standards, 1916 Race St., Philadelphia, PA 19103.

Standard Test Method for Particle-Size Analysis of Soils[1]

This standard is issued under the fixed designation D 422; the number immediately following the designation indicates the year of original adoption or, in the case of revision, the year of last revision. A number in parentheses indicates the year of last reapproval. A superscript epsilon (ε) indicates an editorial change since the last revision or reapproval.

[ε1] NOTE—Section 19 was added editorially in September 1990.

1. Scope

1.1 This test method covers the quantitative determination of the distribution of particle sizes in soils. The distribution of particle sizes larger than 75 µm (retained on the No. 200 sieve) is determined by sieving, while the distribution of particle sizes smaller than 75 µm is determined by a sedimentation process, using a hydrometer to secure the necessary data (Notes 1 and 2).

NOTE 1—Separation may be made on the No. 4 (4.75-mm), No. 40 (425-µm), or No. 200 (75-µm) sieve instead of the No. 10. For whatever sieve used, the size shall be indicated in the report.

NOTE 2—Two types of dispersion devices are provided: (*1*) a high-speed mechanical stirrer, and (*2*) air dispersion. Extensive investigations indicate that air-dispersion devices produce a more positive dispersion of plastic soils below the 20-µm size and appreciably less degradation on all sizes when used with sandy soils. Because of the definite advantages favoring air dispersion, its use is recommended. The results from the two types of devices differ in magnitude, depending upon soil type, leading to marked differences in particle size distribution, especially for sizes finer than 20 µm.

2. Referenced Documents

2.1 *ASTM Standards:*

D 421 Practice for Dry Preparation of Soil Samples for Particle-Size Analysis and Determination of Soil Constants[2]

E 11 Specification for Wire-Cloth Sieves for Testing Purposes[3]

E 100 Specification for ASTM Hydrometers[4]

3. Apparatus

3.1 *Balances*—A balance sensitive to 0.01 g for weighing the material passing a No. 10 (2.00-mm) sieve, and a balance sensitive to 0.1 % of the mass of the sample to be weighed for weighing the material retained on a No. 10 sieve.

3.2 *Stirring Apparatus*—Either apparatus A or B may be used.

3.2.1 Apparatus A shall consist of a mechanically operated stirring device in which a suitably mounted electric motor turns a vertical shaft at a speed of not less than 10 000 rpm without load. The shaft shall be equipped with a replaceable stirring paddle made of metal, plastic, or hard rubber, as shown in Fig. 1. The shaft shall be of such length that the stirring paddle will operate not less than ¾ in. (19.0 mm) nor more than 1½ in. (38.1 mm) above the bottom of the dispersion cup. A special dispersion cup conforming to either of the designs shown in Fig. 2 shall be provided to hold the sample while it is being dispersed.

3.2.2 Apparatus B shall consist of an air-jet dispersion cup[5] (Note 3) conforming to the general details shown in Fig. 3 (Notes 4 and 5).

NOTE 3—The amount of air required by an air-jet dispersion cup is of the order of 2 ft³/min; some small air compressors are not capable of supplying sufficient air to operate a cup.

NOTE 4—Another air-type dispersion device, known as a dispersion tube, developed by Chu and Davidson at Iowa State College, has been shown to give results equivalent to those secured by the air-jet dispersion cups. When it is used, soaking of the sample can be done in the sedimentation cylinder, thus eliminating the need for transferring the slurry. When the air-dispersion tube is used, it shall be so indicated in the report.

NOTE 5—Water may condense in air lines when not in use. This water must be removed, either by using a water trap on the air line, or by blowing the water out of the line before using any of the air for dispersion purposes.

3.3 *Hydrometer*—An ASTM hydrometer, graduated to read in either specific gravity of the suspension or grams per litre of suspension, and conforming to the requirements for hydrometers 151H or 152H in Specifications E 100. Dimensions of both hydrometers are the same, the scale being the only item of difference.

3.4 *Sedimentation Cylinder*—A glass cylinder essentially 18 in. (457 mm) in height and 2½ in. (63.5 mm) in diameter, and marked for a volume of 1000 mL. The inside diameter shall be such that the 1000-mL mark is 36 ± 2 cm from the bottom on the inside.

3.5 *Thermometer*—A thermometer accurate to 1°F (0.5°C).

3.6 *Sieves*—A series of sieves, of square-mesh woven-wire cloth, conforming to the requirements of Specification E 11. A full set of sieves includes the following (Note 6):

[1] This test method is under the jurisdiction of ASTM Committee D-18 on Soil and Rock and is the direct responsibility of Subcommittee D18.03 on Texture, Plasticity, and Density Characteristics of Soils.

Current edition approved Nov. 21, 1963. Originally published 1935. Replaces D 422 – 62.

[2] *Annual Book of ASTM Standards*, Vol 04.08.

[3] *Annual Book of ASTM Standards*, Vol 14.02.

[4] *Annual Book of ASTM Standards*, Vol 14.03.

[5] Detailed working drawings for this cup are available at a nominal cost from the American Society for Testing and Materials, 1916 Race St., Philadelphia, PA 19103. Order Adjunct No. 12-404220-00.

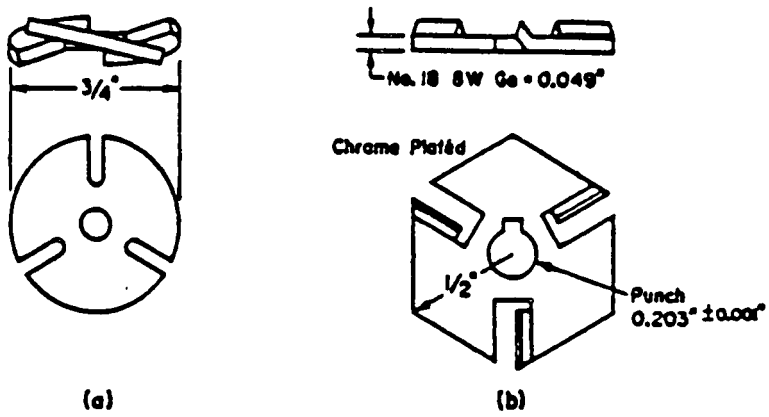

Metric Equivalents

in.	0.001	0.049	0.203	½	¾
mm	0.03	1.24	5.16	12.7	19.0

FIG. 1 Detail of Stirring Paddles

3-in. (75-mm)
2-in. (50-mm)
1½-in. (37.5-mm)
1-in. (25.0-mm)
¾-in. (19.0-mm)
⅜-in. (9.5-mm)
No. 4 (4.75-mm)
No. 10 (2.00-mm)
No. 20 (850-µm)
No. 40 (425-µm)
No. 60 (250-µm)
No. 140 (106-µm)
No. 200 (75-µm)

NOTE 6—A set of sieves giving uniform spacing of points for the graph, as required in Section 17, may be used if desired. This set consists of the following sieves:

3-in. (75-mm)
1½-in. (37.5-mm)
¾-in. (19.0-mm)
⅜-in. (9.5-mm)
No. 4 (4.75-mm)
No. 8 (2.36-mm)
No. 16 (1.18-mm)
No. 30 (600-µm)
No. 50 (300-µm)
No. 100 (150-µm)
No. 200 (75-µm)

3.7 *Water Bath or Constant-Temperature Room*—A water bath or constant-temperature room for maintaining the soil suspension at a constant temperature during the hydrometer analysis. A satisfactory water tank is an insulated tank that maintains the temperature of the suspension at a convenient constant temperature at or near 68°F (20°C). Such a device is illustrated in Fig. 4. In cases where the work is performed in a room at an automatically controlled constant temperature, the water bath is not necessary.

3.8 *Beaker*—A beaker of 250-mL capacity.

3.9 *Timing Device*—A watch or clock with a second hand.

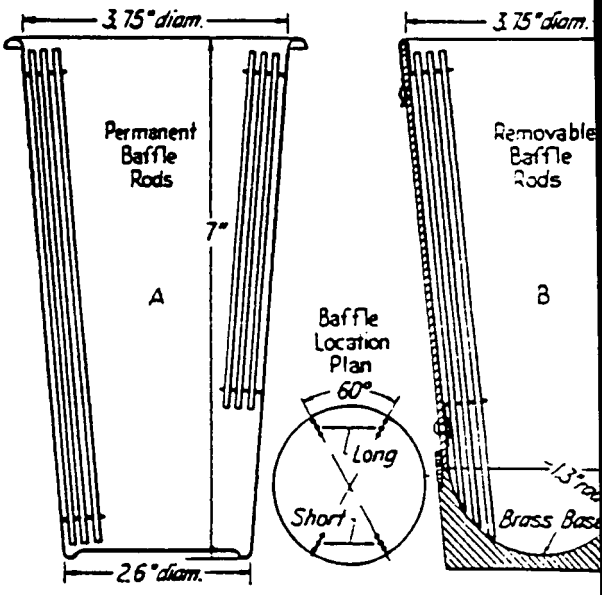

Metric Equivalents

in.	1.3	2.6	3.75
mm	33	66	95.2

FIG. 2 Dispersion Cups of Apparatus

4. Dispersing Agent

4.1 A solution of sodium hexametaphosphate (sometimes called sodium metaphosphate) shall be used in distilled or demineralized water, at the rate of 40 g of sodium hexametaphosphate/litre of solution (Note 7).

NOTE 7—Solutions of this salt, if acidic, slowly revert or hydrolyze back to the orthophosphate form with a resultant decrease in dispersive action. Solutions should be prepared frequently (at least once a month) or adjusted to pH of 8 or 9 by means of sodium carbonate. Bottles containing solutions should have the date of preparation marked on them.

4.2 All water used shall be either distilled or demineralized water. The water for a hydrometer test shall be brought to the temperature that is expected to p during the hydrometer test. For example, if the sedim tion cylinder is to be placed in the water bath, the distil demineralized water to be used shall be brought t temperature of the controlled water bath; or, if the sed tation cylinder is used in a room with controlled tem ture, the water for the test shall be at the temperature room. The basic temperature for the hydrometer test is (20°C). Small variations of temperature do not intr differences that are of practical significance and d prevent the use of corrections derived as prescribed.

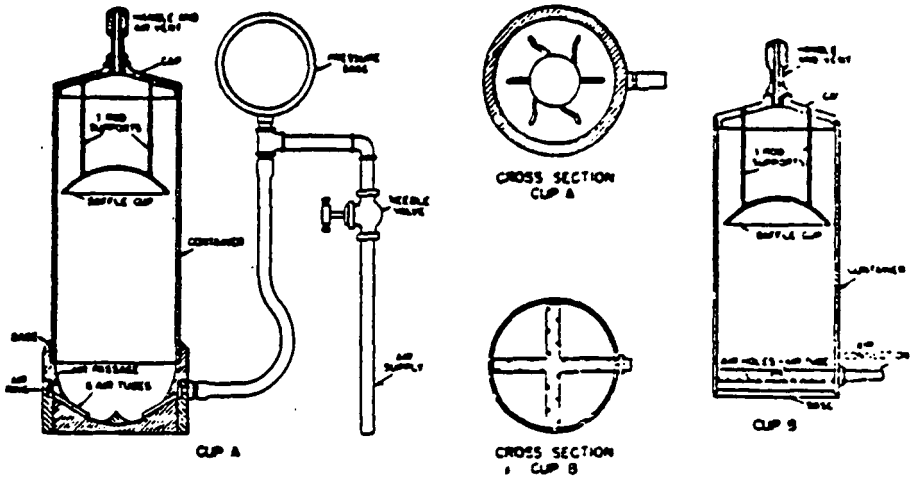

FIG. 3 Air-Jet Dispersion Cups of Apparatus B

5. Test Sample

5.1 Prepare the test sample for mechanical analysis as outlined in Practice D 421. During the preparation procedure the sample is divided into two portions. One portion contains only particles retained on the No. 10 (2.00-mm) sieve while the other portion contains only particles passing the No. 10 sieve. The mass of air-dried soil selected for purpose of tests, as prescribed in Practice D 421, shall be sufficient to yield quantities for mechanical analysis as follows:

5.1.1 The size of the portion retained on the No. 10 sieve shall depend on the maximum size of particle, according to the following schedule:

Nominal Diameter of Largest Particles, in. (mm)	Approximate Minimum Mass of Portion, g
⅜ (9.5)	500
¾ (19.0)	1000
1 (25.4)	2000
1½ (38.1)	3000
2 (50.8)	4000
3 (76.2)	5000

5.1.2 The size of the portion passing the No. 10 sieve shall be approximately 115 g for sandy soils and approximately 65 g for silt and clay soils.

5.2 Provision is made in Section 5 of Practice D 421 for weighing of the air-dry soil selected for purpose of tests, the separation of the soil on the No. 10 sieve by dry-sieving and washing, and the weighing of the washed and dried fraction retained on the No. 10 sieve. From these two masses the percentages retained and passing the No. 10 sieve can be calculated in accordance with 12.1.

NOTE 8—A check on the mass values and the thoroughness of pulverization of the clods may be secured by weighing the portion passing the No. 10 sieve and adding this value to the mass of the washed and oven-dried portion retained on the No. 10 sieve.

SIEVE ANALYSIS OF PORTION RETAINED ON NO. 10 (2.00-mm) SIEVE

6. Procedure

6.1 Separate the portion retained on the No. 10 (2.00-mm) sieve into a series of fractions using the 3-in. (75-mm), 2-in. (50-mm), 1½-in. (37.5-mm), 1-in. (25.0-mm), ¾-in. (19.0-mm), ⅜-in. (9.5-mm), No. 4 (4.75-mm), and No. 10 sieves, or as many as may be needed depending on the sample, or upon the specifications for the material under test.

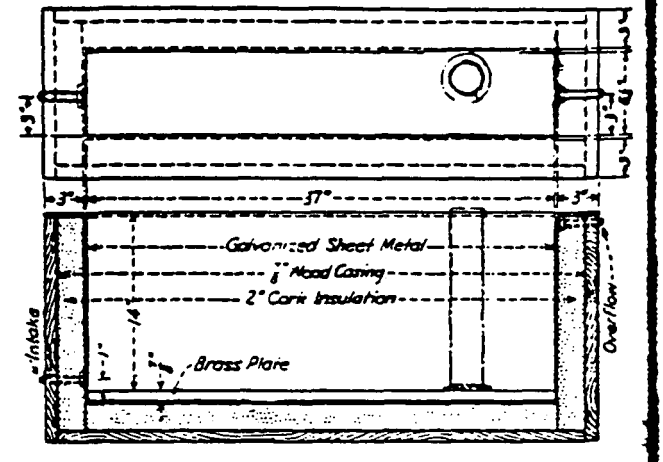

Metric Equivalents

in.	⅞	1	3	6¼	14	37
mm	22.2	25.4	76.2	158.2	356	940

FIG. 4 Insulated Water Bath

6.2 Conduct the sieving operation by means of a lateral and vertical motion of the sieve, accompanied by a jarring action in order to keep the sample moving continuously over the surface of the sieve. In no case turn or manipulate fragments in the sample through the sieve by hand. Continue sieving until not more than 1 mass % of the residue on a sieve passes that sieve during 1 min of sieving. When mechanical sieving is used, test the thoroughness of sieving by using the hand method of sieving as described above.

6.3 Determine the mass of each fraction on a balance conforming to the requirements of 3.1. At the end of weighing, the sum of the masses retained on all the sieves used should equal closely the original mass of the quantity sieved.

HYDROMETER AND SIEVE ANALYSIS OF PORTION PASSING THE NO. 10 (2.00-mm) SIEVE

7. Determination of Composite Correction for Hydrometer Reading

7.1 Equations for percentages of soil remaining in suspension, as given in 14.3, are based on the use of distilled or demineralized water. A dispersing agent is used in the water, however, and the specific gravity of the resulting liquid is appreciably greater than that of distilled or demineralized water.

7.1.1 Both soil hydrometers are calibrated at 68°F (20°C), and variations in temperature from this standard temperature produce inaccuracies in the actual hydrometer readings. The amount of the inaccuracy increases as the variation from the standard temperature increases.

7.1.2 Hydrometers are graduated by the manufacturer to be read at the bottom of the meniscus formed by the liquid on the stem. Since it is not possible to secure readings of soil suspensions at the bottom of the meniscus, readings must be taken at the top and a correction applied.

7.1.3 The net amount of the corrections for the three items enumerated is designated as the composite correction, and may be determined experimentally.

7.2 For convenience, a graph or table of composite corrections for a series of 1° temperature differences for the range of expected test temperatures may be prepared and used as needed. Measurement of the composite corrections may be made at two temperatures spanning the range of expected test temperatures, and corrections for the intermediate temperatures calculated assuming a straight-line relationship between the two observed values.

7.3 Prepare 1000 mL of liquid composed of distilled or demineralized water and dispersing agent in the same proportion as will prevail in the sedimentation (hydrometer) test. Place the liquid in a sedimentation cylinder and the cylinder in the constant-temperature water bath, set for one of the two temperatures to be used. When the temperature of the liquid becomes constant, insert the hydrometer, and, after a short interval to permit the hydrometer to come to the temperature of the liquid, read the hydrometer at the top of the meniscus formed on the stem. For hydrometer 151H the composite correction is the difference between this reading and one; for hydrometer 152H it is the difference between the reading and zero. Bring the liquid and the hydrometer to the other temperature to be used, and secure the composite correction as before.

8. Hygroscopic Moisture

passing #10

8.1 When the sample is weighed for the hydrometer test, weigh out an auxiliary portion of from 10 to 15 g in a small metal or glass container, dry the sample to a constant mass in an oven at 230 ± 9°F (110 ± 5°C), and weigh again. Record the masses.

9. Dispersion of Soil Sample

9.1 When the soil is mostly of the clay and silt sizes, weigh out a sample of air-dry soil of approximately 50 g. When the soil is mostly sand the sample should be approximately 100 g.

9.2 Place the sample in the 250-mL beaker and c 125 mL of sodium hexametaphosphate solution Stir until the soil is thoroughly wetted. Allow to s least 16 h.

9.3 At the end of the soaking period, disperse th further, using either stirring apparatus A or B. I apparatus A is used, transfer the soil - water slurry beaker into the special dispersion cup shown i washing any residue from the beaker into the distilled or demineralized water (Note 9). Add di demineralized water, if necessary, so that the cup than half full. Stir for a period of 1 min.

NOTE 9—A large size syringe is a convenient device for ha water in the washing operation. Other devices include the bottle and a hose with nozzle connected to a pressurized dist tank.

9.4 If stirring apparatus B (Fig. 3) is used, rem cover cap and connect the cup to a compressed air s means of a rubber hose. A air gage must be on between the cup and the control valve. Open the valve so that the gage indicates 1 psi (7 kPa) pressu 10). Transfer the soil - water slurry from the beake air-jet dispersion cup by washing with dist demineralized water. Add distilled or demineralized necessary, so that the total volume in the cup is 250 no more.

NOTE 10—The initial air pressure of 1 psi is required to pr soil - water mixture from entering the air-jet chamber when th is transferred to the dispersion cup.

9.5 Place the cover cap on the cup and open control valve until the gage pressure is 20 psi (14 Disperse the soil according to the following schedule

Plasticity Index	Dispersion Period, min
Under 5	5
6 to 20	10
Over 20	15

Soils containing large percentages of mica need be d for only 1 min. After the dispersion period, reduce t pressure to 1 psi preparatory to transfer of soil - wate to the sedimentation cylinder.

10. Hydrometer Test

10.1 Immediately after dispersion, transfer the soil slurry to the glass sedimentation cylinder, and add or demineralized water until the total volume is 1000

10.2 Using the palm of the hand over the open end cylinder (or a rubber stopper in the open end), t cylinder upside down and back for a period of 1 complete the agitation of the slurry (Note 11). At the 1 min set the cylinder in a convenient location an hydrometer readings at the following intervals o (measured from the beginning of sedimentation), or a as may be needed, depending on the sample or the sp tion for the material under test: 2, 5, 15, 30, 60, 25 1440 min. If the controlled water bath is used, the se tation cylinder should be placed in the bath between and 5-min readings.

NOTE 11—The number of turns during this minute sh approximately 60, counting the turn upside down and back as tw

Any soil remaining in the bottom of the cylinder during the first few turns should be loosened by vigorous shaking of the cylinder while it is in the inverted position.

10.3 When it is desired to take a hydrometer reading, carefully insert the hydrometer about 20 to 25 s before the reading is due to approximately the depth it will have when the reading is taken. As soon as the reading is taken, carefully remove the hydrometer and place it with a spinning motion in a graduate of clean distilled or demineralized water.

NOTE 12—It is important to remove the hydrometer immediately after each reading. Readings shall be taken at the top of the meniscus formed by the suspension around the stem, since it is not possible to secure readings at the bottom of the meniscus.

10.4 After each reading, take the temperature of the suspension by inserting the thermometer into the suspension.

11. Sieve Analysis

11.1 After taking the final hydrometer reading, transfer the suspension to a No. 200 (75-μm) sieve and wash with tap water until the wash water is clear. Transfer the material on the No. 200 sieve to a suitable container, dry in an oven at 230 ± 9°F (110 ± 5°C) and make a sieve analysis of the portion retained, using as many sieves as desired, or required for the material, or upon the specification of the material under test.

CALCULATIONS AND REPORT

12. Sieve Analysis Values for the Portion Coarser than the No. 10 (2.00-mm) Sieve

12.1 Calculate the percentage passing the No. 10 sieve by dividing the mass passing the No. 10 sieve by the mass of soil originally split on the No. 10 sieve, and multiplying the result by 100. To obtain the mass passing the No. 10 sieve, subtract the mass retained on the No. 10 sieve from the original mass.

12.2 To secure the total mass of soil passing the No. 4 (4.75-mm) sieve, add to the mass of the material passing the No. 10 sieve the mass of the fraction passing the No. 4 sieve and retained on the No. 10 sieve. To secure the total mass of soil passing the ⅜-in. (9.5-mm) sieve, add to the total mass of soil passing the No. 4 sieve, the mass of the fraction passing the ⅜-in. sieve and retained on the No. 4 sieve. For the remaining sieves, continue the calculations in the same manner.

12.3 To determine the total percentage passing for each sieve, divide the total mass passing (see 12.2) by the total mass of sample and multiply the result by 100.

13. Hygroscopic Moisture Correction Factor

13.1 The hydroscopic moisture correction factor is the ratio between the mass of the oven-dried sample and the air-dry mass before drying. It is a number less than one, except when there is no hygroscopic moisture.

14. Percentages of Soil in Suspension

14.1 Calculate the oven-dry mass of soil used in the hydrometer analysis by multiplying the air-dry mass by the hygroscopic moisture correction factor.

14.2 Calculate the mass of a total sample represented by the mass of soil used in the hydrometer test, by dividing the oven-dry mass used by the percentage passing the No. 10 (2.00-mm) sieve, and multiplying the result by 100. This value is the weight W in the equation for percentage remaining in suspension.

TABLE 1 Values of Correction Factor, a, for Different Specific Gravities of Soil Particles[A]

Specific Gravity	Correction Factor[A]
2.95	0.94
2.90	0.95
2.85	0.96
2.80	0.97
2.75	0.98
2.70	0.99
2.65	1.00
2.60	1.01
2.55	1.02
2.50	1.03
2.45	1.05

[A] For use in equation for percentage of soil remaining in suspension when using Hydrometer 152H.

14.3 The percentage of soil remaining in suspension at the level at which the hydrometer is measuring the density of the suspension may be calculated as follows (Note 13): For hydrometer 151H:

$$P = [(100\,000/W) \times G/(G - G_1)](R - G_1)$$

NOTE 13—The bracketed portion of the equation for hydrometer 151H is constant for a series of readings and may be calculated first and then multiplied by the portion in the parentheses.

For hydrometer 152H:

$$P = (Ra/W) \times 100$$

where:

a = correction faction to be applied to the reading of hydrometer 152H. (Values shown on the scale are computed using a specific gravity of 2.65. Correction factors are given in Table 1),

P = percentage of soil remaining in suspension at the level at which the hydrometer measures the density of the suspension,

R = hydrometer reading with composite correction applied (Section 7),

W = oven-dry mass of soil in a total test sample represented by mass of soil dispersed (see 14.2), g,

G = specific gravity of the soil particles, and

G_1 = specific gravity of the liquid in which soil particles are suspended. Use numerical value of one in both instances in the equation. In the first instance any possible variation produces no significant effect, and in the second instance, the composite correction for R is based on a value of one for G_1.

15. Diameter of Soil Particles

15.1 The diameter of a particle corresponding to the percentage indicated by a given hydrometer reading shall be calculated according to Stokes' law (Note 14), on the basis that a particle of this diameter was at the surface of the suspension at the beginning of sedimentation and had settled to the level at which the hydrometer is measuring the density of the suspension. According to Stokes' law:

$$D = \sqrt{[30n/980(G - G_1)] \times L/T}$$

where:

D = diameter of particle, mm,

η = coefficient of viscosity of the suspending medium (in this case water) in poises (varies with changes in temperature of the suspending medium),

L = distance from the surface of the suspension to the level at which the density of the suspension is being measured, cm. (For a given hydrometer and sedimentation cylinder, values vary according to the hydrometer readings. This distance is known as effective depth (Table 2)),

T = interval of time from beginning of sedimentation to the taking of the reading, min,

G = specific gravity of soil particles, and

G_1 = specific gravity (relative density) of suspending medium (value may be used as 1.000 for all practical purposes).

NOTE 14—Since Stokes' law considers the terminal velocity of a single sphere falling in an infinity of liquid, the sizes calculated represent the diameter of spheres that would fall at the same rate as the soil particles.

15.2 For convenience in calculations the above equation may be written as follows:

$$D = K\sqrt{L/T}$$

where:

K = constant depending on the temperature of the suspension and the specific gravity of the soil particles. Values of K for a range of temperatures and specific gravities are given in Table 3. The value of K does not change for a series of readings constituting a test, while values of L and T do vary.

15.3 Values of D may be computed with sufficient accuracy, using an ordinary 10-in. slide rule.

NOTE 15—The value of L is divided by T using the A- and B-scales, the square root being indicated on the D-scale. Without ascertaining the value of the square root it may be multiplied by K, using either the C- or CI-scale.

16. Sieve Analysis Values for Portion Finer than No. 10 (2.00-mm) Sieve

16.1 Calculation of percentages passing the various sieves used in sieving the portion of the sample from the hydrometer test involves several steps. The first step is to calculate the mass of the fraction that would have been retained on the No. 10 sieve had it not been removed. This mass is equal to the total percentage retained on the No. 10 sieve (100 minus total percentage passing) times the mass of the total sample represented by the mass of soil used (as calculated in 14.2), and the result divided by 100.

16.2 Calculate next the total mass passing the No. 200 sieve. Add together the fractional masses retained on all the sieves, including the No. 10 sieve, and subtract this sum from the mass of the total sample (as calculated in 14.2).

16.3 Calculate next the total masses passing each of the other sieves, in a manner similar to that given in 12.2.

16.4 Calculate last the total percentages passing by dividing the total mass passing (as calculated in 16.3) by the total mass of sample (as calculated in 14.2), and multiply the result by 100.

17. Graph

17.1 When the hydrometer analysis is performed, a graph of the test results shall be made, plotting the diameter particles on a logarithmic scale as the abscissa percentages smaller than the corresponding diamete

TABLE 2 Values of Effective Depth Based on Hydrometer Sedimentation Cylinder of Specified Sizes[A]

Hydrometer 151H		Hydrometer 152H		
Actual Hydrometer Reading	Effective Depth, L, cm	Actual Hydrometer Reading	Effective Depth, L, cm	Actual Hydrometer Reading
1.000	16.3	0	16.3	31
1.001	16.0	1	16.1	32
1.002	15.8	2	16.0	33
1.003	15.5	3	15.8	34
1.004	15.2	4	15.6	35
1.005	15.0	5	15.5	
1.006	14.7	6	15.3	36
1.007	14.4	7	15.2	37
1.008	14.2	8	15.0	38
1.009	13.9	9	14.8	39
1.010	13.7	10	14.7	40
1.011	13.4	11	14.5	41
1.012	13.1	12	14.3	42
1.013	12.9	13	14.2	43
1.014	12.6	14	14.0	44
1.015	12.3	15	13.8	45
1.016	12.1	16	13.7	46
1.017	11.8	17	13.5	47
1.018	11.5	18	13.3	48
1.019	11.3	19	13.2	49
1.020	11.0	20	13.0	50
1.021	10.7	21	12.9	51
1.022	10.5	22	12.7	52
1.023	10.2	23	12.5	53
1.024	10.0	24	12.4	54
1.025	9.7	25	12.2	55
1.026	9.4	26	12.0	56
1.027	9.2	27	11.9	57
1.028	8.9	28	11.7	58
1.029	8.6	29	11.5	59
1.030	8.4	30	11.4	60
1.031	8.1			
1.032	7.8			
1.033	7.6			
1.034	7.3			
1.035	7.0			
1.036	6.8			
1.037	6.5			
1.038	6.2			

[A] Values of effective depth are calculated from the equation:

$$L = L_1 + \tfrac{1}{2}\left(L_2 - (V_B/A)\right)$$

where:

L = effective depth, cm,

L_1 = distance along the stem of the hydrometer from the top of the b mark for a hydrometer reading, cm,

L_2 = overall length of the hydrometer bulb, cm,

V_B = volume of hydrometer bulb, cm³, and

A = cross-sectional area of sedimentation cylinder, cm²

Values used in calculating the values in Table 2 are as follows:

For both hydrometers, 151H and 152H:

L_2 = 14.0 cm

V_B = 67.0 cm³

A = 27.8 cm²

For hydrometer 151H:

L_1 = 10.5 cm for a reading of 1.000

= 2.3 cm for a reading of 1.031

For hydrometer 152H:

L_1 = 10.5 cm for a reading of 0 g/litre

= 2.3 cm for a reading of 50 g/litre

TABLE 3 Values of K for Use in Equation for Computing Diameter of Particle in Hydrometer Analysis

Temperature, °C	Specific Gravity of Soil Particles								
	2.45	2.50	2.55	2.60	2.65	2.70	2.75	2.80	2.85
16	0.01510	0.01505	0.01481	0.01457	0.01436	0.01414	0.01394	0.01374	0.01356
17	0.01511	0.01486	0.01462	0.01439	0.01417	0.01396	0.01378	0.01356	0.01338
18	0.01492	0.01467	0.01443	0.01421	0.01399	0.01378	0.01359	0.01339	0.01321
19	0.01474	0.01449	0.01425	0.01403	0.01382	0.01361	0.01342	0.1323	0.01305
20	0.01456	0.01431	0.01408	0.01386	0.01365	0.01344	0.01325	0.01307	0.01289
21	0.01438	0.01414	0.01391	0.01369	0.01348	0.01328	0.01309	0.01291	0.01273
22	0.01421	0.01397	0.01374	0.01353	0.01332	0.01312	0.01294	0.01276	0.01258
23	0.01404	0.01381	0.01358	0.01337	0.01317	0.01297	0.01279	0.01261	0.01243
24	0.01388	0.01365	0.01342	0.01321	0.01301	0.01282	0.01264	0.01246	0.01229
25	0.01372	0.01349	0.01327	0.01306	0.01286	0.01267	0.01249	0.01232	0.01215
26	0.01357	0.01334	0.01312	0.01291	0.01272	0.01253	0.01235	0.01218	0.01201
27	0.01342	0.01319	0.01297	0.01277	0.01258	0.01239	0.01221	0.01204	0.01188
28	0.01327	0.01304	0.01283	0.01264	0.01244	0.01255	0.01208	0.01191	0.01175
29	0.01312	0.01290	0.01269	0.01249	0.01230	0.01212	0.01195	0.01178	0.01162
30	0.01298	0.01276	0.01256	0.01236	0.01217	0.01199	0.01182	0.01165	0.01149

arithmetic scale as the ordinate. When the hydrometer analysis is not made on a portion of the soil, the preparation of the graph is optional, since values may be secured directly from tabulated data.

18. Report

18.1 The report shall include the following:

18.1.1 Maximum size of particles.

18.1.2 Percentage passing (or retained on) each sieve, which may be tabulated or presented by plotting on a graph (Note 16),

18.1.3 Description of sand and gravel particles:

18.1.3.1 Shape—rounded or angular,

18.1.3.2 Hardness—hard and durable, soft, or weathered and friable,

18.1.4 Specific gravity, if unusually high or low,

18.1.5 Any difficulty in dispersing the fraction passing the No. 10 (2.00-mm) sieve, indicating any change in type and amount of dispersing agent, and

18.1.6 The dispersion device used and the length of the dispersion period.

NOTE 16—This tabulation of graph represents the gradation of the sample tested. If particles larger than those contained in the sample were removed before testing, the report shall so state giving the amount and maximum size.

18.2 For materials tested for compliance with definite specifications, the fractions called for in such specifications shall be reported. The fractions smaller than the No. 10 sieve shall be read from the graph.

18.3 For materials for which compliance with definite specifications is not indicated and when the soil is composed almost entirely of particles passing the No. 4 (4.75-mm) sieve, the results read from the graph may be reported as follows:

(1) Gravel, passing 3-in. and retained on No. 4 sieve ..... %
(2) Sand, passing No. 4 sieve and retained on No. 200 sieve ..... %
  (a) Coarse sand, passing No. 4 sieve and retained on No. 10 sieve ..... %
  (b) Medium sand, passing No. 10 sieve and retained on No. 40 sieve ..... %
  (c) Fine sand, passing No. 40 sieve and retained on No. 200 sieve ..... %
(3) Silt size, 0.074 to 0.005 mm ..... %
(4) Clay size, smaller than 0.005 mm ..... %
  Colloids, smaller than 0.001 mm ..... %

18.4 For materials for which compliance with definite specifications is not indicated and when the soil contains material retained on the No. 4 sieve sufficient to require a sieve analysis on that portion, the results may be reported as follows (Note 17):

SIEVE ANALYSIS

Sieve Size	Percentage Passing
3-in.	.....
2-in.	.....
1½-in.	.....
1-in.	.....
¾-in.	.....
⅜-in.	.....
No. 4 (4.75-mm)	.....
No. 10 (2.00-mm)	.....
No. 40 (425-μm)	.....
No. 200 (75-μm)	.....

HYDROMETER ANALYSIS

0.074 mm	.....
0.005 mm	.....
0.001 mm	.....

NOTE 17—No. 8 (2.36-mm) and No. 50 (300-μm) sieves may be substituted for No. 10 and No. 40 sieves.

19. Keywords

19.1 grain-size; hydrometer analysis; hygroscopic moisture; particle-size; sieve analysis

The American Society for Testing and Materials takes no position respecting the validity of any patent rights asserted in connection with any item mentioned in this standard. Users of this standard are expressly advised that determination of the validity of any such patent rights, and the risk of infringement of such rights, are entirely their own responsibility.

This standard is subject to revision at any time by the responsible technical committee and must be reviewed every five years and if not revised, either reapproved or withdrawn. Your comments are invited either for revision of this standard or for additional standards and should be addressed to ASTM Headquarters. Your comments will receive careful consideration at a meeting of the responsible technical committee, which you may attend. If you feel that your comments have not received a fair hearing you should make your views known to the ASTM Committee on Standards, 1916 Race St., Philadelphia, PA 19103.

Designation: D 854 – 83 (Reapproved 1990)[ε1]

American Association of Highway and Transportation Officials Standard
AASHTO No.: T 100

OK

Standard Test Method for Specific Gravity of Soils[1]

This standard is issued under the fixed designation D 854; the number immediately following the designation indicates the year of original adoption or, in the case of revision, the year of last revision. A number in parentheses indicates the year of last reapproval. A superscript epsilon (ε) indicates an editorial change since the last revision or reapproval.

This standard has been approved for use by agencies of the Department of Defense. Consult the DoD Index of Specifications and Standards for the specific year of issue which has been adopted by the Department of Defense.

[ε1] NOTE—Section 11 was added editorially in September 1990.

1. Scope

1.1 This test method covers determination of the specific gravity of soils by means of a pycnometer. When the soil is composed of particles larger than the No. 4 (4.75-mm) sieve, the method outlined in Test Method C 127 shall be followed. When the soil is composed of particles both larger and smaller than the No. 4 sieve, the sample shall be separated on the No. 4 sieve and the appropriate test method used on each portion. The specific gravity value for the soil shall be the weighted average of the two values (Note 1). When the specific gravity value is to be used in calculations in connection with the hydrometer portion of Method D 422, it is intended that the specific gravity test be made on that portion of the soil which passes the No. 10 (2.00-mm) sieve.

NOTE 1—The weighted average specific gravity should be calculated using the following equation:

$$G_{avg} = \frac{1}{\frac{R_1}{100G_1} + \frac{P_1}{100G_2}}$$

where:

G_{avg} = weighted average specific gravity of soils composed of particles larger and smaller than the No. 4 (4.75-mm) sieve,

R_1 = percent of soil particles retained on the No. 4 sieve,

P_1 = percent of soil particles passing the No. 4 sieve,

G_1 = apparent specific gravity of soil particles retained on the No. 4 sieve as determined by Test Method C 127, and

G_2 = specific gravity of soil particles passing the No. 4 sieve as determined by this test method.

1.2 The values stated in acceptable metric units are to be regarded as the standard.

1.3 *This standard does not purport to address the safety problems associated with its use. It is the responsibility of the user of this standard to establish appropriate safety and health practices and determine the applicability of regulatory limitations prior to use.*

2. Referenced Documents

2.1 *ASTM Standards:*

C 127 Test Method for Specific Gravity and Absorption of Coarse Aggregate[2]

C 670 Practice for Preparing Precision and Bias Statements for Test Methods for Construction Materials[3]

D 422 Method for Particle-Size Analysis of Soils[3]

E 12 Definitions of Terms Relating to Density and Specific Gravity of Solids, Liquids, and Gases[4]

3. Definition

3.1 *specific gravity*—the ratio of the mass of a unit volume of a material at a stated temperature to the mass in air of the same volume of gas-free distilled water at a stated temperature (per Definitions E 12).

4. Significance and Use

4.1 The specific gravity of a soil is used in almost every equation expressing the phase relationship of air, water, and solids in a given volume of material.

4.2 The term "solid particles," as used in geotechnical engineering, is typically assumed to mean naturally occurring mineral particles that are not very soluble in water. Therefore, the specific gravity of materials containing extraneous matter (such as cement, lime, etc.), water-soluble matter (such as sodium chloride), and soils containing matter with a specific gravity of less than one, typically require special treatment or a qualified definition of specific gravity.

5. Apparatus

5.1 *Pycnometer*—Either a volumetric flask having a capacity of at least 100 mL or a stoppered bottle having a capacity of at least 50 mL (Note 2). The stopper shall be of the same material as the bottle, and of such size and shape that it can be easily inserted to a fixed depth in the neck of the bottle, and shall have a small hole through its center to permit the emission of air and surplus water.

NOTE 2—The use of either the volumetric flask or the stoppered bottle is a matter of individual preference, but in general, the flask should be used when a larger sample than can be used in the stoppered bottle is needed due to maximum grain size of the sample.

5.2 *Balance*—Either a balance sensitive to 0.01 g for use with the volumetric flask, or a balance sensitive to 0.001 g for use with the stoppered bottle.

[1] This test method is under the jurisdiction of ASTM Committee D-18 on Soil and Rock and is the direct responsibility of Subcommittee D18.03 on Texture, Plasticity, and Density Characteristics of Soils.

Current edition approved Nov. 28, 1983. Published January 1984. Originally issued as D 854 – 45. Last previous edition D 854 – 58 (1979).

[2] *Annual Book of ASTM Standards*, Vol 04.02.

[3] *Annual Book of ASTM Standards*, Vol 04.08.

[4] *Annual Book of ASTM Standards*, Vol 15.05.

Calibration of Pycnometer

6.1 The pycnometer shall be cleaned, dried, weighed, and the weight recorded. The pycnometer shall be filled with distilled water (Note 3) essentially at room temperature. The weight of the pycnometer and water, W_a, shall be determined and recorded. A thermometer shall be inserted in the water and its temperature T_1 determined to the nearest whole degree.

NOTE 3—Kerosine is a better wetting agent than water for most soils and may be used in place of distilled water for oven-dried samples.

6.2 From the weight W_a determined at the observed temperature T_1 a table of values of weights W_a shall be prepared for a series of temperatures that are likely to prevail when weights W_b are determined later (Note 4). These values of W_a shall be calculated as follows:

$$W_a \text{ (at } T_x) = (\text{density of water at } T_x/\text{density of water at } T_1) \times (W_a \text{ (at } T_1) - W_f) + W_f$$

where:

W_a = weight of pycnometer and water, g,
W_f = weight of pycnometer, g,
T_1 = observed temperature of water, °C, and
T_x = any other desired temperature, °C.

NOTE 4—This method provides a procedure that is most convenient for laboratories making many determinations with the same pycnometer. It is equally applicable to a single determination. Bringing the pycnometer and contents to some designated temperature when weights W_a and W_b are taken, requires considerable time. It is much more convenient to prepare a table of weights W_a for various temperatures likely to prevail when weights W_b are taken. It is important that weights W_a and W_b be based on water at the same temperature. Values for the relative density of water at temperatures from 18 to 30°C are given in Table 1.

7. Sampling

7.1 The soil to be used in specific gravity test may contain its natural moisture or be oven-dried. The weight of the test sample on an oven-dry basis shall be at least 25 g when the volumetric flask is to be used, and at least 10 g when the stoppered bottle is to be used.

7.2 *Samples Containing Natural Moisture*—When the sample contains its natural moisture, the weight of the soil, W_o, on an oven-dry basis shall be determined at the end of the test by evaporating the water in an oven maintained at 230 ±9°F (110 ±5°C) (Note 5). Samples of clay soils containing their natural moisture content shall be dispersed in distilled water before placing in the flask, using the dispersing equipment specified in Method D 422 (Note 6).

7.3 *Oven-Dried Samples*—When an oven-dried sample is to be used, the sample shall be dried for at least 12 h, or to constant weight, in an oven maintained at 230 ±9°F (110 ±5°C) (Note 5), cooled in a desiccator, and weighed upon removal from the desiccator. The sample shall then be soaked in distilled water for at least 12 h.

NOTE 5—Drying of certain soils at 110°C may bring about loss of moisture of composition or hydration, and in such cases drying shall be done, if desired, in reduced air pressure and at a lower temperature.

NOTE 6—The minimum volume of slurry that can be prepared by the dispersing equipment specified in Method D 422 is such that a 500-mL flask is needed as the pycnometer.

TABLE 1 Relative Density of Water and Conversion Factor K For Various Temperatures

Temperature, °C	Relative Density of Water	Correction Factor K
18	0.9986244	1.0004
19	0.9984347	1.0002
20	0.9982343	1.0000
21	0.9980233	0.9998
22	0.9978019	0.9996
23	0.9975702	0.9993
24	0.9973286	0.9991
25	0.9970770	0.9989
26	0.9968156	0.9986
27	0.9965451	0.9983
28	0.9962652	0.9980
29	0.9959761	0.9977
30	0.9956780	0.9974

8. Procedure

8.1 Place the sample in the pycnometer, taking care not to lose any of the soil in case the weight of the sample has been determined. Add distilled water to fill the volumetric flask about three-fourths full or the stoppered bottle about half full.

8.2 Remove entrapped air by either of the following methods: (*1*) subject the contents to a partial vacuum (air pressure not exceeding 100 mm Hg) or (2) boil gently for at least 10 min while occasionally rolling the pycnometer to assist in the removal of the air. Subject the contents to reduced air pressure either by connecting the pycnometer directly to an aspirator or vacuum pump, or by use of a bell jar. Some soils boil violently when subjected to reduced air pressure. It will be necessary in those cases to reduce the air pressure at a slower rate or to use a larger flask. Cool samples that are heated to room temperature.

8.3 Fill the pycnometer with distilled water, clean the outside and dry with a clean, dry cloth. Determine the weight of the pycnometer and contents, W_b, and the temperature in degrees Celsius, T_x, of the contents as described in Section 6.

9. Calculation and Report

9.1 Calculate the specific gravity of the soil, based on water at a temperature T_x, as follows:

$$\text{Specific gravity, } G \text{ at } T_x = W_o/[W_o + (W_a - W_b)]$$

where:

W_o = weight of sample of oven-dry soil, g,
W_a = weight of pycnometer filled with water at temperature T_x (Note 7), g,
W_b = weight of pycnometer filled with water and soil at temperature T_x, g, and
T_x = temperature of the contents of the pycnometer when weight W_b was determined, °C.

NOTE 7—This value shall be taken from the table of values of W_a, prepared in accordance with 6.2, for the temperature prevailing when weight W_b was taken.

9.2 Unless otherwise required, specific gravity values reported shall be based on water at 20°C. The value based on water at 20°C shall be calculated from the value based on water at the observed temperature T_x, as follows:

$$\text{Specific gravity, } G \text{ at } 20°\text{C} = (K) \times (\text{specific gravity, } G \text{ at } T_x)$$

where:

K = a number found by dividing the relative density of water at temperature T_x by the relative density of water at 20°C. Values for a range of temperatures are given in Table 1.

9.3 When it is desired to report the specific gravity value based on water at 4°C, such a specific gravity value may be calculated by multiplying the specific gravity value at temperature T_x by the relative density of water at temperature T_x.

9.4 When any portion of the original sample of soil is eliminated in the preparation of the test sample, the portion on which the test has been made shall be reported.

10. Precision and Bias

10.1 Criteria for judging the acceptability of specific gravity test results obtained by this test method on material passing the No. 4 (4.75-mm) sieve are given as follows (Note 8):

Material and Type Index	Standard Deviation[A]	Acceptable Range of Two Results (percent of mean)[A]
Single-operator precision:		
Cohesive soils	0.021	0.06
Noncohesive soils	[B]	[B]
Multilaboratory precision:		
Cohesive soils	0.056	0.16
Noncohesive soils	[B]	[B]

[A] These numbers represent, respectively, the (1S) and (D2S) limits as described in Practice C 670.

[B] Criteria for assigning standard deviation values for non-cohesive soils are not available at the present time.

10.2 *Bias*—There is no accepted reference value for this test method, therefore bias cannot be determined.

NOTE 8—The figures given in Column 2 are the standard deviations that have been found to be appropriate for the materials described in Column 1. The figures given in Column 3 are the limits that should not be exceeded by the difference between the results of two properly conducted tests.

11. Keywords

11.1 specific gravity

The American Society for Testing and Materials takes no position respecting the validity of any patent rights asserted in connection with any item mentioned in this standard. Users of this standard are expressly advised that determination of the validity of any such patent rights, and the risk of infringement of such rights, are entirely their own responsibility.

This standard is subject to revision at any time by the responsible technical committee and must be reviewed every five years and if not revised, either reapproved or withdrawn. Your comments are invited either for revision of this standard or for additional standards and should be addressed to ASTM Headquarters. Your comments will receive careful consideration at a meeting of the responsible technical committee, which you may attend. If you feel that your comments have not received a fair hearing you should make your views known to the ASTM Committee on Standards, 1916 Race St., Philadelphia, PA 19103.

ATTACHMENT 2

KINETIC PHOSPORESCENCE ANALYSIS

Lockheed KPA Analytical Method (for use on-site at Fernald)

Uranium in Water, Soil/Sediment, and Air Filters
by Pulsed-Laser Phosphorimetry

Working Linear Range:	Greater than 50 ng/L, infinite with dilution
Reporting Limit:	50 ng/L Water; TBD for other matricies
Reporting Units:	Water, mg/L; Solids
Matricies:	Water, soil/sediment

1.0 Scope and Application

1.1 The method covers the determination of uranium in water and soil/sediment in the range of 50mg/L or greater. Samples with uranium levels above the laser phosphorimeter dynamic range may be diluted to bring the concentration to a measurable level. The minimum detectable concentration is approximately 50 ng U/L of water. The nominal sensitivity that may be obtained by this exact method for the other media requires additional performance data.

1.2 The method applies to Analytical Support Level C.

2.0 Method Summary

2.1 The method is based on the use of commercially available laser phosphorimeters to analyze uranium in the sample media.

2.2 The method is useful for the analysis of water either directly, following dilution, or following wet-ashing as required by the sample media.

3.0 Interferences

3.1 Possible interference modes in uranium assays will consist of four types:

3.1.1 Absorption (Inner Filter Effect): Absorption of ultraviolet excitation light (337 nm) is more severe than visible excitation because many prevalent compounds have pi-bonding and absorb strongly in that region. Ferric iron and oxy-anions such as nitrate and organic acids are examples. Visible excitation (425 nm) may be absorbed by yellow solutions; e.g., chromate. Interferences may cause reduced signals and low results.

3.2.1 Lumiphors: Many organic substances, such a humic acids and organic degradation products from incomplete ashing, emit luminescence of varying lifetimes after excitation. Such effects are handled according to the manufacturer's instructions.

3.1.3 Quenching: Shortened triplet-state lifetime and reduced phosphorescence intensities of the excited uranyl complex result when quenching occurs. Reliable result can not be obtained when quenching exceeds 80 to 90%. Reducing agents, such as alcohols, halides except fluoride, and metals with electronic energy levels overlapping those of uranyl ion, are strong quenching agents. Examples are silver, lead, iron (II), manganese (II), and thallium. Results from single time-gated instruments are particularly sensitive to even mild quenching agents such as Al (II), Mg (II), Ca(II), and Sr(II). See the manufacturer's literature for more specific information.

3.1.4 Competing Reactions: For the method to perform well, the uranyl ion must be protected from various intermolecular mechanisms that rapidly quench the uranyl luminescence.

Complexation fulfills this need, an examples of effective agents are phosphoric acid, polyphosphates for uranium analysis is patented by Scintrex, Ltd.; they are very acid sensitive. Nitric acid as low as one molar concentration suppresses complexation of uranyl ion with phosphoric acid which permits increased quenching effects. Uraplex is a stronger complexing agent and is effective in samples containing up to two molar nitric acid.

4.0 Safety Precautions

4.1 The analyst must practice standard laboratory safety procedures as outlined in the laboratory-specific hygiene plan as specified by OSHA regulation 29 CFR Part 1910.1450. Any hazardous waste generated during the procedure, or samples determined to be hazardous, will be disposed of in accordance with applicable federal, state, and local regulations.

4.2 Because hazardous chemicals are used during the method, procedures for handling low level radioactive materials, acids, and/or solvents must be practiced. Personal protective equipment must include goggles for eye protection, gloves for skin protection, and lab coat or apron for clothing protection.

5.0 Sample Collection and Handling

Sample size, container, and preservative requirements are detailed in Section 6.7 and Appendix K of the FEMP SCQ, and they are summarized in Appendix A, Table 6-1.

6.0 Apparatus

6.1 Laser phosphorimeter, meeting the following criteria:

6.1.1 Detection limit: The detectable level for uranium must be 50 mg/L or less.

6.1.2 Dynamic range: The phosphorimeter must handle an analytical range from 50 to 20,000 ng/L. Samples with higher concentrations may be diluted.

6.1.3 Instrumental precision: The precision of repetitive measurements must be within 15% R.S.D.

6.2 Beakers, pipettes, funnels, and volumetric flasks: Class A volumetric glassware is used for standard preparation unless otherwise specified. If samples containing less than 100 ng/L uranium are to be analyzed, digestion vessels (both Teflon and glassware) if used, should be leached in hot, dilute nitric acid to reduce sample contamination from leachable uranium. Liquid scintillation vials, for example, should be hot-acid leached for at least 3 days before use in digestions.

6.3 Ceramic or Vycor containers (casseroles).

6.4 Drying oven: Gravity convection type is recommended, having thermostatic controls to maintain desired temperature and able to reach at least 125 C and able to maintain temperatures within +/-5 C.

6.5 Hot Plate

6.6 Muffle furnace: Able to reach at least 150°C and able to maintain temperatures within +/-15 C.

6.7 Analytical balance: Scale readability of +/- 0.01 g.

6.8 Centrifuge capable of 5000 rpm with timer.

6.9 Electric hot plate/magnetic stirrer: Apparatus should have built in stirrer and stepless temperature controls that can be changed as heating requirements demand.

7.0 Routine Preventive Maintenance

7.1 Perform routine preventive maintenance for the laser phosphorimeter according to the manufacturer's directions.

7.2 All instrument maintenance must be documented in the instrument-specific maintenance logbook, as specified in Section 13 of the SCQ.

7.3 Examine Class A glassware before each use for scratches and cracks and replace as necessary.

8.0 Reagents

8.1 Chemicals must be reagent grade, meeting American Chemical Society (ACS) specifications. In all cases, acids or bases are added to water.

8.2 Water: All references to water, unless otherwise specified, assume the use of ASTM Type II water.

8.3 Nitric acid (HNO_3), 16 M: Concentrated.

8.4 Nitric acid (HNO_3), 1 M: Dilute 60 mL of concentrated HNO_3, to 1 L with water.

8.5 Nitric acid (HNO_3), 3 M: Dilute 189.5 mL of concentrated HNO_3, to 1 L with water.

8.6 Uranium complexant. The source of phosphoric acid, if used, must be selected with care because it has varying levels of uranium impurity. Reagents supplied by laser phosphorimeter manufacturers are recommended because of lower uranium background. Use of URAPLEX can produce better precision and lower detection limits because of the longer phosphorescence lifetimes of the uranyl complex as well as stronger complexes for resistance to quenching.

8.7 Uranium standard: From NIST, or NIST-traceable, or from another nationally recognized agency.

8.8 Hydrogen peroxide (H_2O_2), 30%: Reagent.

9.0 Calibration Procedures

Follow the manufacturer's instructions to calibrate the laser phosphorimeter.

9.1 The laser phosphorimeter must be calibrated annually over the entire calibration range.

9.2 The calibration must be verified weekly or prior to each use with three standards, one each at the extremes and another at the center of the concentration range.

9.3 A single point calibration check must be made with each batch of samples.

10.1 **Sample Preparation**

10.1 Samples may be analyzed with any of three levels of pretreatment. The choice depends on desired detection limit, what is known about the sample source, and the content of quenchers and lumiphors. General guidelines below are followed by specific sample media preparation steps.

10.1.1 Direct: Clear water from municipal supplies or streams can usually be analyzed without dilution. Follow the instructions provided by the phosphorimeter manufacturer.

10.1.2 Dilution: If the desired lower level of determination permits a large dilution, this may be the only sample treatment necessary. Both quenching agents and lumiphors can be diluted to levels of negligible effect. Analyze the dilution according to the instructions provided by the phosphorimeter manufacturer.

10.1.3 Ashing: Most quenching agents are either volatilized or oxidized, and lunimizing substances can be decomposed.

10.2. Water: If sample cannot be analyzed directly or by dilution, wet ash the sample as follows.

10.2.1 Transfer desired aliquot of sample to a beaker and add at least 10% by volume of concentrated nitric acid. Record volume of sample used.

10.2.2 Record comment if presence of any undissolved material is noted.

10.2.3 Carefully evaporate the sample solution to dryness. Caution: Rapid boiling will cause spattering and poor precision.

Note: Substantial organic material will require addition of hydrogen peroxide as a second oxidant. The nitric acid/oxidant may need to be replenished to complete the ashing.

10.2.4 Dissolve residue with 1 M nitric acid and warm; transfer to volumetric flask and dilute to the desired final volume using 1 M nitric acid. Record final volume.

10.3 Glass Fiber Filters

10.3.1 Remove filter from shipping envelope or bag and hold filter over 125 mL platinum dish while cutting it into pieces about 1" by 2" with a cleaned pair of scissors. Transfer any material remaining inside bag to platinum dish.

10.3.2 Place dish with sample in muffle furnace. Ash sample for about 16 hours at 500 C +/- 15 C.

10.3.3 Remove dish and allow to cool.

10.3.4 Completely dampen the sample with a minimum amount of but no more than 10 mL of concentrated HNO_3.

10.3.5 Add 15 mL of concentrated HF in 5 mL portions. Evaporate on hot plate until moist residue remains. Remove dish and allow to cool.

10.3.6 Add 10 mL of concentrated HF and evaporate until residue is almost completely dry.

Remove dish and allow to cool.

10.3.7 Add 10 mL of concentrated HNO_3 and evaporate until sample is lightly fuming and just moist. Remove dish and allow to cool.

10.3.8 Repeat above step (step 10.3.7).

10.3.9 Moisten residue on sides and bottom of dish with 3 M HNO_3. Scrape residue from sides and bottom of dish, and break it up with a Teflon rod. Wash down sides of dish and Teflon rod thoroughly using 3 M HNO_3.

10.3.10 Return dish to hot plate and evaporate until about 5 mL of solution remains. Remove dish and allow to cool.

10.3.11 Filter sample using a funnel and Whatman No. 42 filter paper into 50 mL volumetric flask.

10.3.12 Wash out dish using three small portions (less than 5 mL each) of 3 M HNO_3.

10.3.13 Wash down filter and residue with three small portions (less than 5 mL each) of 3 M HNO_3.

10.3.14 Make up contents of volumetric flask to 50 mL with 3 M HNO_3, stopper, and mix thoroughly.

10.3.15 Continue with Sample Analysis, Section 11.0

10.4 Soil/Sediment

10.4.1 Dry sample at 100 C /- 5 C until visible dry.

Note: Use FEMP procedure FM-CON-0190 to determine percent moisture (soils) or percent solids (sediment), if requested.

10.4.2 Weigh an appropriate amount of the dried soil/sediment sample to meet the required sensitivity and transfer to casserole. Record exact (dry) weight used.

Heat casserole containing sample in oven. Muffle for 2 hours at 200 C +/- 15 C. Remove and cool.

10.4.3 Transfer sample to 250 mL beaker, rinsing casserole with 10 mL portions of 16 M HNO_3, to a final volume of 60 mL of nitric acid.

10.4.4 Carefully add 30 mL each of 16 M HNO_3 and digest on a hot plate with some stirring for an additional hour.

10.4.5 Remove from hot plate and cool to room temperature. Slowly add 20 mL of 16 M HNO_3, and heat on hot plate with some stirring until solution has evaporated to liquid volume of approximately 10 mL.

10.4.6 Add 50 mL of water, and digest on hot plate with stirring for 10 minutes to dissolve soluble salts.

10.4.7 Cool and centrifuge sample at 5000 rpm for 5 minutes. Pour off liquid into 100 mL volumetric flask with minimum of 3 M HNO_3. Wash residue with 3 M HNO_3.

If any residue remains, repeat steps 10.4.3 through 10.4.7, combining filtrates in the 100 mL volumetric flask.

10.4.8 Make volume up to 10 mL with 3 M HNO_3. Proceed to Sample Analysis Section 11.0 Sample may require additional dilution before analysis.

11.0 Sample Analysis

Analyze the solution according to the instructions provided by the laser phosphorimeter manufacturer.

12.0 Calculations

12.1 Refer to the laser phosphorimeter manual for appropriate calculation, which varies depending on the instrument model and brand.

12.2 Final results are automatically calculated by computerized instruments.

13.0 Data Package Deliverables

Data package deliverables are determined by the Analytical Support Level and are outlined in the FEMP SCQ or specified in the project specific Sampling and Analysis Plan or the analytical laboratory services contract.

14.0 Quality Control Requirements

Quality Control requirements are determined by the Analytical Support Level and the project specific plan. A specific discussion of each type of QC sample is presented in the SCQ.

Analytical Support Level C and D

Requirement	Frequency*	Acceptance Range	Corrective Action
Blank	1/20	<MDA	Qualify data
LCS	1/20	70 - 130%	Qualify data
Duplicate	1/20	0 - 20% RPD	Qualify data

* or per batch or fraction thereof
- per matrix

Where LCS Laboratory Control Sample
MDA Minimum Detectable Amount
RPD Relative Percent Difference

15.0 References

Standard Test Method for Trace Uranium in Water by Pulsed-Laser Phosphorimetry, (Draft) ASTM Standard D19.04.005RO. 1992.[1]

Uranium in water, soil/sediment, and air filters by Pulsed-Laser Phosphorimetry, Fernald Laboratory Analytical Method FM-RAD-0120.[1]

[1]This procedure differs from the above referenced procedures with respect to digestion of soils in

HNO_3/HF. The Fernald and ASTM methods call for heated concentrated HNO_3/HF digestion. This method will remove occluded uranium from refractory silicates and surficial contamination. Use of HF ensures removal of occluded uranium from refractory silicates. Since existing data or Fernald soils and Lockheed's analysis of Fernald soils indicates that the contamination is surficial use of HF is not necessary to obtain accurate measurements of total uranium. Consequently this procedure calls for a heated HNO_3 digestion.

ATTACHMENT 3

DRY AND WEIGH

(DURATEK TO PROVIDE)

ATTACHMENT 4

Eh (OXIDATION POTENTIAL)

(DURATEK TO PROVIDE)

ATTACHMENT 5

DIRECT CURRENT PLASMA (DCP), INDUCTIVELY COUPLED PLASMA MASS SPECTROMETERS (ICPMS), AND ION EXCHANGE CHROMATOGRAPHY (IEC)

VSL Technical Procedure **UNCONTROLLED**

TITLE: Analysis Procedures

DOCUMENT: TPI-AL Rev # 1

ISSUED: 10/91 REV #: 0
REVISED: 10/92 REV #: 1

Documents Incorporated:

TPI03.WVN	Rev. #0
TPI-AL.WVN	Rev. #3
TPI-CA.WVN	Rev. #3
TPI-DP.WVN	Rev. #1

Prepared by:

Marek Brandys
Laboratory Manager

M. Adel-Hadadi
Laboratory Manager

Aaron Barkatt
Laboratory Manager

Approved by:

Pedro B. Macedo
Co-Director, VSL

C. Sivaprakash
Quality Assurance Officer, VSL

ANALYTICAL LABORATORY PROCEDURES MANUAL

Table of Contents

Section	Description
1.0	Purpose
2.0	Applicability
3.0	Safety
	3.1 Hazards
	3.2 Hazard Mitigation
	3.2.1 Identification of Hazards
	3.2.2 Handling and Storage of Chemicals
	3.2.3 Emergencies
	3.3 Personnel Protection
4.0	Requirements
	4.1 Training
	4.2 Control of Standards
5.0	References
6.0	Procedures
	6.1 Sample Preparation
	6.1.1 Preparation of Samples for Analysis
	6.1.2 General Solution Analysis
	6.1.3 Glass and Sludge Dissolution for Analysis
	6.1.4 Calibration of Pipettes
	6.2 Analysis with DC Plasma Emission Spectrophotometer
	6.2.1 Solution Preparation and Analysis
	6.2.2 DC Plasma Emission Spectrophotometer Operating Procedure
	6.3 Analysis with Ion Exchange Chromatography
	6.3.1 Solution Preparation and Analysis
	6.3.2 Ion Exchange Chromatography Operating Procedure
	6.4 Analysis with ICPMS
	6.4.1 Solution Preparation and Analysis
	6.4.2 ICPMS Operating Procedure

6.5 Analysis with Perkin Elmer Spectrophotometer
6.5.1 Solution Preparation for Silicon Analysis
6.5.2 Spectrophotometer Operating Procedure
6.5.3 Procedure for Spectrophotometer Accuracy Verification

7.0 Control of Samples and Release of Results

8.0 Data Processing

9.0 Assurance of Reliability of Analytical Results

10.0 Record Keeping

REVISION TO THE TECHNICAL PROCEDURES MANUAL

Summary of Changes

Document: TPI-AL

Rev. Date: 10/92 Rev #: 1

Procedure ID/Page	Location	Change
Page 12	Standard Solutions	Sentence modified
Page 14	General Solution Anal:	Para modified
Page 15	Table of Pipettes	Updated
Page 16	Glass Dissolution	Procedure steps modified
Page 17	Methods 2 and 3	Dropped
Page 18	Calibration of Pipettes -	Mettler changed to anal. bal.
Page 19	Analysis on AAS	Dropped
Page 28	Anal. with DCP	Steps 2 and 3 modified
Page 29	DCP Emission	Steps (a) and (f) modified
Page 33	Step (i)	Modified
Page 34	Computer Programming	Steps a, c, d, e, modified
Page 35	Running Samples	Steps a,b, c, modified
Page 68, Section 8	Data Processing	Modified

1.0 PURPOSE

These procedures describe methods, materials, equipment and special conditions required to perform chemical analyses of liquid and/or solid samples. These procedures provide the means for obtaining verifiable, reproducible, documented data from tests and experiments.

2.0 APPLICABILITY

An indispensable part of the work carried out in our laboratories is chemical analysis. Various instruments are available for this purpose including a Spectrametrics DC plasma spectrophotometer (DCP), a Dionex Model 2010I ion-chromatograph, Inductively Coupled Plasma Mass Spectrometer (ICP-MS) and two Perkin Elmer Models 330 and 323 spectrophotometers.

Work with the DCP and DIONEX devices is performed in our "Analytical Laboratory". The other two instruments mentioned above, as well as other chemical analysis tools, are used in our "General Chemistry Laboratory". Analysis on ICP-MS is performed in Mass Spectrometry Laboratory.

These procedures apply to all employees trained and authorized to perform chemical analysis of liquid and/or solid samples in the VSL Analytical Facilities. Specific activities covered by these procedures include: a) acceptance of samples for analysis; b) preparation and handling of stock standard solutions and other reference materials; c) preparation of liquid and/or

solid samples for various types of analysis; d) calibration and operation of (i) the DC plasma emission spectrophotometer; (ii) the ion exchange chromatograph; (iii) the inductively coupled plasma-mass spectrometer; (iv) the Perkin Elmer 330 spectrophotometer; e) release and assurance of reliability of analytical results; f) record keeping; g) data processing of analytical data.

These procedures will be implemented by personnel from the VSL.

3.0 SAFETY

3.1 HAZARDS

The definition of a hazardous chemical is given in Section 8.3 of the CUA Chemical Materials Safety Manual, adopted from the OSHA Hazard Communication Standard. The CUA Chemical Materials Safety Manual is hereafter referred to as the CCMSM. This Standard and its application to CUA facilities are described in Sections 8.1 of the CCMSM, with the exceptions noted in Section 8.28.

3.2 HAZARD MITIGATION

3.2.1 Identification of Hazards

The identification of chemical hazards should include an education program (Section 8.2 of the CCMSM). This program should include familiarization with the CCMSM as a whole,

including the toxic properties of chemicals according to Sections 8.22, 8.23, 8.24 and 8.25 of the CCMSM, other hazards of chemicals classified under Sections 8.9, 8.10, 8.11, 8.12, 8.13 and 8.14 of the CCMSM, chemical handling and storage procedures (see paragraph 3.2.2 below), and emergencies (see paragraph 3.2.3 below). The education program will also include familiarization with the CUA Chemical Hygiene Program (CCHP) when the document describing this Program is finalized and approved for distribution by the University.

Other elements of hazard identification include the proper use of labels (Section 8.4 of the CCMSM) and of Material Safety Data Sheets (Sections 8.5, 8.26 and 8.27 of the CCMSM). Workplace chemical lists should be compiled, maintained, and made available for employees in accordance with Section 8.31. In addition, a copy of the CCMSM should be kept in the laboratory and its use should be included in the education program cited above. The same should apply to the CUA Chemical Hygiene Program (CCHP) when the document describing this Program is finalized and approved for distribution by the University.

3.2.2 Handling and Storage of Chemicals

Handling of chemicals should be conducted according to Section 8.6 of the CCMSM. Storage of chemicals should follow Section 8.8 of the CCMSM. Special precautions should be taken in handling and storage of incompatible chemicals, solvents, compressed gases, and radioactive materials according to Sections 8.10, 8.12, 8.13, and 8.14 of the CCMSM, respectively. Unstable chemicals according to Section 8.9 should be excluded from the

analytical facilities except in cases where the introduction of such a material is sanctioned by the laboratory manager in writing. In such a case the manager shall specify the maximum quantity of the material and the maximum period it may be stored before being discarded. Shock-sensitive chemicals according to Section 8.11 should never be introduced into the laboratory under any circumstances. No work requiring the use of restricted areas according to Section 8.15 should be performed within the analytical laboratories, except on temporary basis and only if adequate modifications have been made to the facilities and the specific procedures have been established. This includes all operations involving radioactive materials.

Waste disposal of hazardous chemicals should follow procedures established by the CUA Environmental safety Office according to Section 8.16 of the CCMSM. No radioactive waste shall be disposed of by analytical laboratories. All processed samples and their overflow should be returned to the originator of the samples for disposal. Any solid radioactive waste generated during operations is to be collected in separate containers and transferred to CUA Radiation Safety Office (RSO).

3.2.3 Emergencies

Chemical spills should be dealt with according to Section 8.17 of the CCMSM. Fire and fire-related emergencies should be controlled according to Section 8.21 of the CCMSM. Cases of personal contamination should be treated according to Section 8.19 of the CCMSM, cases of injury and illness according to Section 8.18, and cases requiring minor first aid according to

Section 8.20. All emergencies involving radioactive materials should be reported immediately to the RSO and dealt with according to the procedures outlined in the Radiation Safety Manual distributed by the RSO.

3.3 PERSONNEL PROTECTION

Personnel protection should consist of two elements. The first is familiarization and compliance with the instructions of the CUA Chemical Materials Safety Manual (CCMSM), including identification of hazards (see paragraph 3.2.1 above), handling and storage of chemicals (see paragraph 3.2.2 above), and dealing with emergencies (see paragraph 3.2.3 above). The second element is familiarization and compliance with the CUA Chemical Hygiene Program (CCHP) when the document describing this Program is finalized and approved for distribution by the University. The overall chemical hygiene program (Section 8.34 of the CCHP), based on the OSHA Regulation on Occupational Exposure to Hazardous Chemicals in Laboratories, should be followed. In detail, exposure reduction measures (Section 8.35 of the CCHP) will include environmental monitoring (8.35.1), inspections, maintenance and housekeeping (8.35.2), use of protective apparel and equipment (8.35.3), posting of signs and labels (8.35.4), and dealing with accidents and spills (8.35.5). Ventilation of both general laboratory spaces and of special areas and local devices such as chemical fume hoods and glove boxes should follow the instructions of Section 8.36 of the CCHP. Employees should take part in the safety information and training program which exists in the University according to

Section 8.37 of the CCHP. All personnel involved in handling of radioactive materials should be approved by the RSO and should participate in Radiation Safety Training Program provided by the RSO. Certain laboratory operations may require approval from the laboratory manager prior to implementation according to Section 8.38 of the CCHP. Employees should be informed about the medical program provided by the University in cases of work with hazardous substances according to Section 8.39 of the CCHP. Responsibility for chemical hygiene rests with all employees. Specific chemical hygiene responsibilities as applied to the analytical facilities are specified in Section 8.40 of the CCHP. Analytical laboratories personnel workers should be familiar with the basic rules and procedures for working with chemicals included in Section 8.41 of the CCHP and should work in full compliance with these rules and procedures. Animal work, whether involving chemicals of high chronic toxicity according to Section 8.41.5 of the CCHP or not involving chemicals of this type, should not be carried out in the analytical facilities.

4.0 REQUIREMENTS

4.1 TRAINING

All analytical laboratory personnel are trained in the understanding and use of the technical methods that they will use by the laboratory supervisor or by a trained and experienced person designated by the laboratory supervisor. Upon completion of training for a method, a technician is qualified to use that method independent of direct supervision.

4.2 CONTROL OF STANDARDS

Stock Standard Solutions

(1) All the instrumental analysis in the Analytical Laboratory are performed on relative basis by comparison with known standards.

(2) Sufficient stock of concentrated Standard Solutions should be kept in the Analytical Laboratory to allow at least 30 days of continuous work. (This means about 200 ml of solution containing approximately 1000 ppm of specimen.)

(3) The term "concentrated solution" means the solution contains 1000 $\pm$ 20% ppm of the analyte in question. No stock of more diluted standard solutions is allowed to be kept in the laboratory for a period exceeding 24 hours. Diluted solutions containing one or more of the following elements: Si, Fe, U, Th should be freshly prepared every 8 hours.

(4) Stock of standard solutions to be analyzed by atomic emission/absorption techniques should be purchased from major commercial sources. No use of solutions is allowed beyond expiration dates, if such dates are provided by the manufacturer or when the volume in the bottle falls below 1/8 of the total volume.

(5) Standard Solutions of anionic species for ion chromatography should be purchased from the National Institute for Standards and Technology in the form of 1000 ppm solutions.

All standard solutions of cations shall be analyzed relative to NIST standards on a monthly basis and a limit of $\pm$ 5% will be acceptable.

5.0 REFERENCES

Vogel, A. "Textbook of Quantitative Inorganic Analysis," 4th ed., Longman Scientific and Technical, England 1987.

Willard, H. H., Merritt, L. L. Jr., Dean, J. A. and Settle, F. A. "Instrumental Methods of Analysis," 6th Ed., D. Van Nostrand Co., New York 1981.

Boumans, P. W. J. M. (Ed.) Inductively Coupled Plasma Emission Spectroscopy," John Wiley and Sons, New York, 1987.

A. R. Date and A. L. Gray (Ed.) "Applications of Inductively Coupled Plasma - Mass Spectrometry," Champman and Hall, New York 1989.

The Catholic University of America Chemical Materials Safety Manual, January 1989.

The Catholic University of Chemical Hygiene Program, in preparation.

Radiation Safety Manual of the Catholic University of America, January 1980, W. E. Keene RSO.

6.0 OPERATIONAL PROCEDURES

6.1 SAMPLE PREPARATION

6.1.1 Preparation of Samples for Analysis

(1) Only liquid samples can be analyzed.

(2) With liquid samples, proceed as per procedure in section 6.1.2 below.

(3) Solid samples have to be converted into liquid form as per procedure in section 6.1.3 below.

6.1.2 General Solution Analysis

Procedure

Depending on what elements and ions are expected to be present, solutions are analyzed using a DC plasma spectrophotometer (DCP), and a Dionex ion exchange chromatograph. Generally, the DCP is used for Zr, Zn, P, Si, Ti, B, Mn, Fe, Co, Ca, Al, Cu, Mo, Ce, Sr, K, Na, Li, Mg, Ni, Nd and Cr analysis, and the Dionex to analyze anions such as F-, Cl-, NO2-, Br-, PO4---, NO3- and SO4--.

Qualitative handling of the solutions should be performed utilizing calibrated volumetric tools. These include volumetric flasks of various sizes and automatic dispensing pipettes (see Table in this section) with disposable tips (having fixed or variable volumes). To assure the accuracy of the volumetric tools, the following routine procedure should be applied:

Table

Qty	Device	Manufacturer	Model #	Calib. Req.
10	Auto. Pipettes			
1	50 microliter	Eppendorf	3130	I
1	100 microliter	Eppendorf	3130	I
1	200 microliter	Eppendorf	4700	I
1	1000 microliter	Eppendorf	4700	I
1	250 microliter	Eppendorf	4700	I
1	500 microliter	Eppendorf	4700	I
1	4 milliliter	Oxford	Macroset	I
1	5 milliliter	Oxford	Macroset	I
1	10 milliliter	Oxford	Macroset	I
1	0.025-10 milliliter	Rainin	EDP-25	II
	Volumetric flasks (PMP)	Various		N.A.

I: Calibration check performed every month according to the procedure described in section 6.1.4.

II: Calibration check performed according to the procedure described in section 6.1.4 every six months.

- volumetric flasks : visually examine every volumetric flask prior to use. If there is any mechanical damage to the flask or any permanent, visible solid residue inside, the flask should be discarded. Carefully rinse the flask after use with DI water to avoid deposition of solids.
- dispensing pipettes : gravimetric check of the calibration is required every month as per procedure in section 6.1.4). If the calibration cannot be adjusted, the tool should be replaced. If an adjustment has been performed, the calibration of the instrument should be immediately rechecked before it is returned to general use. The calibration check reports should be filed into the folder and kept in the Analytical Laboratory.

6.1.3 Glass and Sludge Dissolution for Analysis

Note: *Deviations from the methods described below may occur and are recorded in the Analysis Procedures Laboratory Notebook*

Dissolution of Glass, Sludge, Soil and Other Solids

(1) Weigh an amount of of solid as determined by the laboratory supervisor. In the cases of dry solids the solid should be previously ground into very fine powder and dried overnight at 105°C. Record the weight of the sample and transfer to a 125-ml narrow-mouth polyethylene bottle.

(2) Add several ml of one or more concentrated acids selected from the list of HF, HCl, HNO_3 and H_2SO_4 by the laboratory supervisor and record the volumes of each acid.

(3) Leave in sand bath for 2 to 3 hours at (70 $\pm$ 10)°C.

(4) In the case that dissolution is not complete, add further volumes of one or more acids selected from the list given in paragraph 2 by the laboratory supervisor and resume the heating at (90 $\pm$ 10)°C. Repeat as needed to produce complete dissolution. Record all details.

(5) If the glass is completely dissolved, add DI water to bring volume to 100 ml, and analyze the solution as per procedure in section 6.1.2.

6.1.4 Calibration of Pipettes

Method: Gravimetric using an analytical balance.

Frequency: Monthly except Rainin pipette which is six monthly.

Required Accuracy: As specified in individual procedures or as per instructions of the Project Manager.

(1) Obtain a "Pipette Calibration Check Record" form and supply requested information on pipette to be calibrated (e.g. manufacturer, model #, etc.).

(2) Tare out the weight of a 20 ml plastic vial on the balance.

(3) Pipet out deionized water from the pipette to be calibrated into the plastic vial. Record

nominal capacity, actual capacity (weight displayed on the balance), and percent error under the appropriate columns.

(4) Repeat steps (2) and (3) 5-15 times. For variable volume pipettes perform the measurement for 2-5 volume settings.

(5) Calculate the percent error as follows:

$$\% \text{ ERROR} = \frac{(\text{Actual capacity}) - (\text{Nominal capacity})}{(\text{Nominal capacity})} \times 100$$

(6) Examine results and report deviations from required accuracy to the Laboratory Manager.

(7) Sign and date and file form in the 'Calibration Records'

6.2 SOLUTION ANALYSIS WITH DC PLASMA

6.2.1 Solution Analysis with DC Plasma Emission Spectrophotometer (Water Matrix Only)

(1) A volume of at least 5 ml of the solution is required for analysis.

(2) Using a 2% HNO_3 solution as the matrix, prepare a Hi Std solution containing all of the elements of interest. The concentrations of elements in the Hi Std should somewhat (but no more than twice) exceed the expected concentrations of elements in the solution.

(3) Use a 2% HNO_3 solution as the Zero Std (Blank).

(4) Transfer the samples to be analyzed and the standard solutions to centrifuge tubes. At least two sets of standards will be required. Maximum of up to 32 samples can be analyzed per run.

(5) Load the automatic sampler carousel with the samples and the standard solutions according to the following sequence:

Position #1 : Zero Standard (always)
Position #2 : High Standard (always)
Position #3 - #12: Samples (maximum)

For higher positions the sequence can be repeated or terminated by the use of a zero standard followed by a hi standard.

Note: *There is a maximum of up to 10 samples allowed between two adjacent sets of standards. If certain series of samples consist of solutions having wide differences in concentration ranges (factor of 5 or more) and a cross-contamination is likely to occur, the samples can be separated by the zero standard. In that event, the zero standard has to be considered as a sample.*

(6) To perform the analysis and to obtain the report of the results, follow the procedure in section 6.3.2 below.

(7) If the sample (or samples) contain elements which have to be analyzed in a single element mode, perform the multiple element mode analysis first.

6.2.2 DC Plasma Emission Spectrophotometer Operating Procedure

Manufacturer: Spectrametrix Inc.
Model #: Spectra Span III-B

(1) Start-up procedure (to be performed daily or every 8 hours of continuous operation and recorded in the "DCP Maintenance" LN).

(a) Make sure that the plasma power supply switch (PLS) and the argon switch are in the OFF position. Set RUN/READY switch to RUN.

(b) Remove the shield covering the jet assembly.

(c) If the instrument was operated recently, wait a few minutes to give the electrodes sufficient time to cool.

(d) Replace all consumable elements of the jet assembly (i.e. ceramic sleeves, graphite anodes, and the stainless steel cathode).

(e) Turn argon gas ON on the tank and the regulator.

(f) To see if all the electrodes are properly set up, switch the RUN/READY switch to READY. All three electrodes should meet, with the cathode in the center of the far anode, making it bow slightly. If it is not in this READY position, move the cathode back and forth with the cylinder adjusting nut until the conditions above are satisfied.

(g) Turn the RUN/READY switch to RUN, and turn the gas switch off.

(h) Check if the aspiration hose and the waste hose are worn down; if they are,

change both of them, not just one, as this may variably affect the rate of inflow and rate of outflow and excessive moisture develop inside the atomizing chamber.

(i) Carefully replace the shield and protective cover.

(2) To Light the Spectrajet

(a) Make sure that the RUN/READY switch is on RUN.

(b) Turn up the argon gas switch.

(c) Make sure to have the proper gas pressures:

20 psi nebulizer

50 psi sleeves

(d) Turn the RUN/READY switch to READY.

(e) Push the PLS button.

(f) Set the peristaltic pump switch on and have DI water aspirating, as well as the pump clamp engaged.

(g) Once a constant sound is heard, watching the electrodes through the shield, flip the RUN/READY switch to RUN. The flame should appear and have the characteristic inverted "Y" appearance. If only a partial flame appears, or if no flame appears, quickly turn the RUN/READY switch back to READY, wait 5 seconds, and once again flip the switch to RUN. If, again, flame is not there or is not complete, try two more times, and if no success is achieved, flip to

READY, turn PLS button off, gas switch off, and readjust the electrodes. If after this the flame does not light, consult the manual.

(3) Element Programming

(a) At this point, choose the elements desired among the twenty elements on the cassette. To do this, flip the black switches corresponding to the elements in your high std up. The rest of the switches must be down.

(b) Now push in the light above the first black switch that is turned up. The LED display will now show information corresponding to that element.

(c) Set all the PMTs according to the temporary list posted.

(d) Now look at the first lit element. To check whether the correct high std value happens to be already entered from the last run, press DIS HI. The LED display will show the high std concentration for that element from the last run. If a change is desired, press C (to clear), enter the desired high std on the keyboard, and press ENT HI. Now the correct high std has been entered. Again to check, press DIS HI.

(e) To enter the correct low std, do as above, except with DIS LO, and ENT LO.

(f) Now push in the light above the second black switch that is up, and to the above procedure for the element. After the last element is completed, the DC Plasma is programmed to the high and low standards entered.

(4) Alignment of The Flame

(a) Visually inspect the flame - should have a stable, "straight-up" appearance. If not, adjust electrodes.

(b) Listen for an unusually high whistling sound - if present, adjust the gas flow to each anode and cathode with a small screwdriver. Caution should be exercised as this changes the shape, the focus, and the temperature of the flame.

(c) Look at the reflection of the flame on the entrance slit. The "Y" should have a sharp, in-focus appearance. If not, consult the trouble shooting section of the manual.

(d) The central point of the "Y" should be just below the third slit from the bottom, just illuminating the very bottom of the slit. To move the "Y" horizontally or vertically, use the silver set of knobs on the front part of the electrode assembly.

(5) Alignment of the Cassette

(a) Depending on the cassette used have a 10 ppm Cu or Ca solution aspirating.

(b) Turn up the Cu or Ca element switch, as well as the light above it.

(c) Turn the MODE switch to 1, the DIAG switch up, the REPEAT switch to 0, the AVG ONLY up and down, RST.

(d) Put the TIME setting high enough to read about 5000 on the LED display.

(e) Tune in the plasma position.

(f) AVG only up and down, RST.

(g) Optimize the Cu or Ca wavelength - turn the "vertical" and "horizontal" dials until the LED display is as high as it can get. Use the fine adjustment dials for this, as gentle rotation produces the best results.

(h) Once the cassette is aligned according to the Cu or Ca wavelength, switch the MODE switch to INT, TIME to 8, and REPEAT to 3.

(i) Other settings should be:

PRINT	up	BKGRD	down
DIAG	down	STD DEV	up
XMIT	up	LED	down
INT STD	down	ALL CHAN	up
CASSETTE	1		
TEST CURRENT on PMT			
AVG ONLY	down	RST	momentarily pressed

(j) Turn off the Cu or Ca element switch and turn on the light to one of the other elements in your run.

(k) AVG ONLY up and down, RST.

(l) Aspirate DI water.

(6) Standardization

(a) Divide the high and low standards to the appropriate test tubes on the carousel, with enough left in the flasks for calibration.

(b) Aspirate high std solution.

(c) Push A/R button.

(d) Once the A/R button goes off, HI STD button automatically comes on. Once this button goes off, the high std is calibrated.

(e) Have the low std (or blank) aspirating, for at least a minute since no carry-over from the previous high std is desired.

(f) Push LO STD button.

(g) Once this button goes off, the low std is calibrated.

(h) A printout on the high standard will show how accurate the high std was. If these are not satisfactory, both stds should be made new, and the DC Plasma restandardized.

(i) Aspirate DI water.

(7) Computer Programming

(a) Insert a disk with the printed side up and the notch toward the outside. Close the disk drive opening.

(b) Turn on the computer unit and the terminal.

(c) The computer monitor should appear; if not, turn on the reset button in the back of the computer unit.

(d) Type: DCP DATA

(e) Type in the date and the whole program, paying attention to the HS INT (number of samples in each block) in the parameter section, as well as the correct values for the high stds.

(8) Running Samples

(a) Insert the stainless steel aspiration tube into the sampler arm and push the Return button on the terminal. The computer will now take over and run the samples according to the scheme programmed.

(b) Watch for the steel tube being lowered directly into each tube on the carousel!

(c) Once the run is completed, the carousel will be reset into its starting position, calculations and the final printout should follow.

(d) Take the steel aspiration tube out of the sampler arm and aspirate with DI water

(9) Single Element Mode

(a) Replace multi-element cassette with single element cartridge.

(b) Use the first channel for all single mode elements.

(c) Refer to the "Handbook of the Spectral Lines of Elements for DC Plasma/Echelle Systems" and select the best line for the particular element of interest.

(d) Standardize the instrument with the standard solutions of that element (ref to para. 6 above)

(e) Run Samples as described in paragraph 8.

(10) Shutdown Procedure

(a) Take the aspiration tube out of DI water and aspirate air for about one minute.

(b) Press the PLS button so light is off.

(c) Flip the RUN/READY switch to READY

(d) Shut the argon gas off at the tank.

(e) Wait until the lines are bled, the regulator show '0', then flip the gas switch off or down. Then shut the argon gas off at the regulator.

(f) Turn the peristaltic pump switch off, and lower the pump clamp assembly.

(g) Set all PMT settings to '1'.

(h) Shut down the computer unit, the terminal, and the cooling water pump!

(11) Daily Maintenance (Record in "DCP Maintenance " LN)

(a) Replace all consumable elements of the jet assembly and align electrodes.

(b) "Peak" the system with Cu or Ca solution.

(12) Weekly Maintenance (Record in "DCP Maintenance" LN)

(a) Replace all plastic hoses.

(b) Rinse complete aspiration system with DI water.

(c) Rinse, clean and oil all ceramic rollers.

(d) Replace systems cooling water with fresh DI water.

(e) Clean the nebulizer using DI water and compressed air.

(f) Replace all consumable elements of the jet assembly

(g) Align electrodes

(h) "Peak" the system with Cu or Ca solution and align optics

(i) Seal all connections with teflon film tape

(j) Check channel's electronic function

6.3 ANALYSIS WITH ION EXCHANGE CHROMATOGRAPHY

6.3.1 Solution Preparation and Analysis

(1) About 2 ml of solution are required for analysis.

(2) Prepare the standard solution containing all the anions of interest, matching approximately the expected concentrations of anions in the sample to be analyzed.

(3) Refer to procedure in section 6.3.2 and perform the analysis of the standard solution first. Note if there is any change in retention time for each of the various anions by comparing the chromatogram with the most recent one. Then, perform the analysis of the sample.

(4) To obtain the results, Proceed as follows:

(a) identify the peaks of the appropriate anions by comparison with the standard output.

(b) measure the height of the peaks

(c) if no change in retention times has been observed (para. (3) above), obtain the results from the calibration curve (para. (5) below). If the retention times have changed, either compare the standard output with the sample output or construct the new calibration curve.

(5) Calibration curve is a graph showing the concentration of a particular anion species (in

ppm) against the appropriate peak height (in mm) which should be performed every 6 months.

6.3.2 Dionex Chromatograph Ion Exchange Operating Procedure

Manufacturer: Dionex
Model #: 2010i

(1) Operation Instructions for System Components

(a) Analytical Pump

(i) Eluent Section

Before beginning operation, prime the eluent manifold with the desired eluents (including regenerent and water, if used). After changing or refilling an eluent reservoir, reprime the corresponding eluent valve.

Procedure:

(1) Press STOP/START to stop the pump.

(2) Attach an empty 10 ml syringe to the luer adaptor on the priming valve.

(3) Turn the small handle on the priming valve to align with the syringe.

(4) If desired, fill the eluent reservoirs and connect them to the eluent bulkhead connectors on the pump.

Note: *Prime only one valve at a time.*

(5) Select an eluent (press the switch 'ON'). Use the syringe to draw liquid

from the reservoir, through the liquid lines and the eluent manifold, into the syringe. This flushes out any air or liquid trapped previously in the liquid line.

(6) Turn off the eluent valve just flushed. Remove and empty the syringe.

(7) Replace the syringe, select the next eluent, and repeat Step 5.

Note: *When making an eluent change while the pump is running, first select the new eluent, wait 1-2 seconds, then turn off the old eluent. This prevents the formation of bubbles in the eluent manifold during the change.*

(8) Repeat Steps 5 and 6 for the remaining eluents (if used).

(ii) Priming The Pump

The pump rarely loses prime when in continuous, routine use. However, if an eluent reservoir empties during operation, or if the pump has not been used for a month or more, it may be necessary to reprime the pump before resuming operation.

CAUTION

Bypass all columns before priming the pump to

avoid accidental system overpressing and possible column damage.

---

(1) Turn the knob on the pressure transducer housing counterclockwise approximately one-half turn. This opens the pressure transducer waste valve.

(2) Select one eluent (turn on the valve).

(3) Set FLOW SELECT to 1.0 ml/min.

(4) Set LOCAL/REMOTE to LOCAL.

(5) Set the LOCAL PRESSURE LIMIT SELECT to zero (00 x 10 psi) and the HIGH PRESSURE LIMIT SELECT to 500 (5 x 100 psi).

(6) Fill the 20 ml syringe with isopropyl alcohol. Connect the syringe to the priming valve luer adaptor.

(7) Turn the small handle on the valve to align with the syringe, opening the internal valve.

(8) Press START/STOP to start the pump.

(9) Slowly push the alcohol through the pump with the syringe. Ensure that alcohol is pushed through both heads by watching the Delivery Status LEDs: each LED must light at least once while pushing the alcohol through the pump.

Note: *Avoid pushing any air trapped in the syringe through the pump. This will result in the loss of prime.*

(10) Set FLOW SELECT to 4.0 ml/min and flush the pump with eluent for 2 minutes.

(11) Turn the handle on the priming valve to the right of the open position, closing the valve.

(12) Set FLOW SELECT to the desired flow rate.

(13) Turn the knob on the pressure transducer housing clockwise to close the waste valve.

——————— CAUTION ———————

Overtightening may damage the pressure transducer housing or the valve seal.

———————————————

(14) Place the columns in line and set the pressure limits.

(15) Wait for the READY LED to light, indicating that the pump flow-control system is operating, before beginning an analysis.

(iii) Selecting The Pressure Limits

The low and high pressure limits automatically stop the pump in the event of system malfunction (e.g., overpressuring or a leak downstream from the pump). After priming the pump, select a high pressure limit 50-100 psi above the normal system operating pressure. The pump has an automatic safety high pressure limit of 1900 psi, above which it will not operate. Select a low pressure limit 100-200 psi below the normal system operating pressure.

Note: *The low pressure limit may be inactivated, as during priming, by setting the LOW PRESSURE LIMIT SELECT switches to zero.*

(b) Advanced Chromatography Module

(i) Routine Operation

During an analysis, Valve A is OFF, directing eluent flow through the injection valve to the separator, the suppressor (if used), and finally, through the detector cell to waste.

Turn Valve A On during on-line regeneration of the suppressor column. This reverses the flow through the suppressor and bypasses the injection valve, the separator, the cell, and all interconnecting tubing. See the Column manual for complete suppressor regeneration instructions. (**Note:** *this procedure does not apply for fiber type suppressor which is self-regenerating.*)

Periodically empty the waste container to prevent overflow. Take appropriate precautions when handling the strong acid and/or base waste from suppressor regeneration.

(ii) Making An Injection

The Advanced Chromatography Module is equipped with a 50 μl sample loop. Load sample into the sample loop through the SAMPLE PORT by the following method:

(1) Flush Sample Loop. Attach a syringe to the SAMPLE PORT. Insert the end of the tubing from the #2 bulkhead fitting into a small container of deionized water or eluent. Set the LOAD/INJECT switch to LOAD and draw at least 10 loop volumes (e.g., 0.5 ml for a 50 ul loop) of liquid into the syringe, flushing the sample loop completely.

(2) Load sample. Wipe off the end of the tube, then insert it into the sample container. Draw at least 10 loop volumes of sample into the syringe, filling the loop completely. Subsequent repetitive injections require only 5 loop volumes of sample.

(3) Inject Sample. After the detector baseline is stable, offset it to zero, and set the LOAD/INJECT switch to INJECT.

(c) Conductivity Detector

(i) Start-up

After installing the detector, or whenever the detector power has been off, follow this start-up procedure to reset the detector microprocessor.

(1) Check that all cables are correctly connected and that the detector is plugged into the power strip.

(2) Check that the power switch on the power strip is 'ON'.

(3) Turn on the POWER switch.

(4) Set the LOCAL/REMOTE switch to LOCAL.

(5) Turn 'OFF' the AUTO-OFFSET.

(6) Turn 'OFF' THE cell, then turn it to 'ON'.

(ii) Routine Operation

Check that CELL is on. Turn off the AUTO-OFFSET during system equilibration. Select an OUTPUT RANGE which will allow the baseline to be monitored on the recorder. After the chromatographic system is equilibrated, and the baseline is stable, select the OUTPUT RANGE sensitivity required for the analysis. Set TEMPERATURE COMPENSATION to the desired value (see Section iv). Then turn AUTO-OFFSET 'ON' just before beginning an analysis. The baseline may be reset to zero at any time by momentarily turning off AUTO-OFFSET then turning it back on.

(iii) Eluents

In general, eluents used with conductivity detection should have conductivities less than 50 μS for optimum detector sensitivity. In Ion ChromatographyTM, highly conductive eluent ions are removed from the eluent stream or converted to less conductive forms by the suppressor before entering the cell.

(iv) Temperature Compensation Optimization

The TEMPERATURE COMPENSATION setting for most eluents is approximately 1.7 %/°C. Optimize the Temperature Compensation setting for each column set and

eluent batch to minimize temperature-caused variations in the measured conductivity. This is especially important when operating at high sensitivities. The optimum setting for any eluent is determined as follows:

(1) Install a 30 cm (12 in) length of 0.5 mm ID tubing between the suppressor outlet (or Port #3 on Valve A) and the cell inlet.

(2) Prepare a beaker of room-temperature water and one of boiling water. Place the tubing from Step 1 in the room-temperature water.

(3) Install the columns.

(4) Set TEMPERATURE COMPENSATION to 2.0 %/°C.

(5) Begin pumping the eluent through the system.

(6) Select an OUTPUT RANGE which keeps the baseline on scale.

(7) After the system reaches equilibrium, and the baseline is stable, set the OUTPUT RANGE to 30 μS. Turn on AUTO-OFFSET. Position the recorder pen about halfway up the paper.

(8) Record the baseline for 1 tp 2 minutes.

(9) Remove the tubing from the room-temperature water and place it in the boiling water for 1 to 2 minutes. Note the recorder baseline shift. If the baseline shifts positive, the TEMPERATURE COMPENSATION setting is too low. If it shifts negative, the setting is too high.

(10) Place the tubing in the room-temperature water and allow the baseline to

restabilize for 1 to 2 minutes.

(11) Based on the results of Step 9, increase or decrease the TEMPERATURE COMPENSATION setting by 0.5 %/°C for the first trial and by 0.1 %/°C for successive trials.

(12) Repeat Steps 9 and 10 until the recorder baseline shift is at a minimum.

(13) Disconnect the tubing and reconnect the suppressor to the cell inlet as it was originally.

(14) Close the column compartment, covering the valve compartment.

(2) Performing Analysis

(a) Initial Operation

If a new column is installed, verify that the system is operating correctly by duplicating the test chromatograms sent with the columns. This also provides an opportunity to become familiar with operating the system before beginning actual analyses.

(1) Read Paragraph 1 above. It contains detailed operating instructions for each component.

(2) From the test chromatogram sent with each separator column, determine the eluent, flow rate, and full-scale setting used to analyze the test standard.

(3) Prepare the eluent and suppressor regenerant (if required) specified on the test chromatographs and connect them to the pump eluent manifold system.

(4) Select the flow rate indicated on the test chromatogram and allow the system to equilibrate with the eluent to be used in the analysis.

Note: *Normally, at least 20 column volumes of eluent are required for complete equilibration.*

(5) Set the conductivity detector TEMP COMP to 1.7.

Note: *The value 1.7 is the nominal Temperature Coefficient of the "standard anion eluent". Use this value with any eluent for the purposes of this test. During actual analysis, use the experimentally determined eluent temperature coefficient for optimum performance.*

(6) Turn on the recorder. Set the conductivity detector OUTPUT RANGE to a value that keeps the recorder pen on scale and monitors the base line. Once the baseline is stable, select the detector output range indicated on the test chromatogram.

(7) Load the sample loop with the standard solution shipped with the columns, offset the baseline, and inject the sample.

(8) Compare the chromatogram obtained with the test chromatogram.

(9) Calculate the efficiency and line resolution of the peaks indicated on the

test chromatogram. The calculated values should agree within 20-25% of those on the test chromatogram.

Note: *Slight differences are due to instrument variations and /or differences in temperature and eluent strength from test conditions.*

(b) Routine Operation

Routine operation consists of injecting samples using the procedure described in the paragraph above.

(c) Short-term Shutdown

Following completion of the daily operation, the system is normally set to stand-by state until operation is resumed.

(1) Turn off the pump, and recorder. Set the conductivity detector RANGE to '10k' μs and turn 'Off' CELL.

(2) Leave the POWER 'On'.

Note: *If the power is turned 'Off', the conductivity detector must be reset when operation is resumed.*

(d) Prolonged Shutdown

Use the following shutdown procedure if the system will not be used for two weeks or more.

(1) Prepare columns for storage.

——————— CAUTION ———————

Improper storage of columns may result in permanent degradation and loss of performance.

(2) Remove the columns from the system, couple the column lines together, and flush the system with deionized water for 30 minutes at 9.9 ml/min.

(3) Turn off the POWER switch.

6.4 SOLUTION ANALYSIS WITH ICP-MS

6.4.1 Solution Preparation and Analysis

(1) Obtain the run information sheet and labels for the run from the Data Processing laboratory and obtain the samples from the Leach laboratory

(2) Prepare the standards required to be used in the run according to the instructions given on the run information sheet using the automatic pipette, 20 ml scintillation vials and polymethylpentane volumetric flasks.

(3) Add about 8 mls of the WASH solution (2% HNO_3 with deionized water) and about 8 mls of the ZERO solution (1% HNO_3 prepared by dilution of 70% HNO_3 with deionized water) to the required number of scintillation vials for the run.

(4) Arrange the vials in the order given on the run information sheet and label them with the sticky labels provided.

(5) Perform the analysis according to procedure in section 6.5.2 below.

6.4.2 Inductively Coupled Plasma-Mass Spectrometer Operating Procedure

Manufacturer: VG Instruments
Model #: PQI

A. <u>Turning on of Instrument</u>

(1) Open the two valves marked "Gas Supply" and "Pressure Buildup" on the argon cylinder.

(2) Ensure that the supply of argon is sufficient for one day's work by checking that the

liquid level marker in the central indicator on the cylinder is at least one quarter of the way up between the two points marked "N".

(3) Open the air by turning the black valve completely counterclockwise and then clockwise back again one quarter of a turn.

(4) Turn the intensity knob clockwise on the Tracor-Northern MCA of the instrument until the letters TN-7200 are of acceptable brightness.

(5) Ensure that the TIME switch on the Quadrupole Control panel is set to "EXT".

(6) Turn on the electric switch of the surge protection unit under the computer.

(7) Place about 100 mls of deionized water in a 120 ml urine sample cup and place the cup in the position allocated for it in the start-up and tuning rack of the autosampler.

(8) Set the start-up and tuning rack in the rightmost position of the autosampler tray.

(9) Ensure the cap has been removed from the cup.

(10) Turn on the autosampler.

(11) Load file #6 into the autosampler control keypad by hitting the "EDIT" key, the "6" key and then the "ENTER" key twice.

(12) Press the "START" key and the probe will enter the cup containing the deionized water.

(13) Load the peristaltic PVC tubes on to the head of the peristaltic pump and turn the pump on.

(14) Wait about one minute while deionized water is pumped through the instrument.

(15) Turn off the peristaltic pump.

(16) Turn on the computer and printer.

(17) At the prompt "C:\>" type "ICPMS" and strike "ENTER" key.

(18) After about 2 minutes the ICPMS options will appear on the screen and then load the instrument control program by striking the F1 key.

(19) Turn on the plasma of the instrument as follows:

WARNING: FAILURE TO EXACTLY FOLLOW THIS PROCEDURE MAY LEAD TO MELTING OF THE TORCH AND TO EXTENSIVE DAMAGE TO THE INSTRUMENT.

(a) Depress the three green buttons marked "COOL," "AUX" and "NEB" on the MS81 gas control panel.

(b) Adjust the flow rates of the gases to:

(i) 12 lit/min for the cooling gas

(ii) 2.5 lit/min for the auxiliary gas

(iii) 0.7 lit/min for the nebulizer gas

(c) Wait at least 5 minutes.

(d) Switch off the nebulizer gas.

(e) Wait until the flow indicator in the gas control panel flashes.

(f) Depress the red button marked "POWER" on the plasma radio frequency (RF)

generator.

(g) IMMEDIATELY ignite the plasma by depressing the red button marked "IGNITE" on the gas control panel.

(h) If the plasma does not form within 5 seconds depress the "IGNITE" button again.

(i) If the plasma still does not form IMMEDIATELY depress the yellow button marked "STANDBY" located on the plasma RF generator and consult with the project manager.

(j) IMMEDIATELY after the plasma is formed depress the green button marked "NEB" on the gas control panel.

(20) Turn the peristaltic pump on again in order to pass deionized water into the plasma.

(21) Hit the F4 key on the computer keyboard labelled "ICP CONTROL" followed by the F6 key labelled "TORCH POSITION".

(22) Once the torch has moved forward hit the "Esc" key.

(23) Hit the F5 key labelled "SAMPLE INTERFACE" followed by the F1 key labelled "EXPANSION PUMP".

(24) Wait until the expansion pressure reads "OK" and then hit the F3 key labelled "EXTRACTION ON/OFF".

(25) If the computer indicates that extraction lens 2 is not activated hit the F4 key labelled "EXTRACTION 1/2".

(26) Check that the expansion pressure reads "OK", then wait about one minute and then hit

the F2 key labelled "SLIDE VALVE".

(27) Ensure that the pressure reading on the Edwards vacuum controller gauge is below 5 x 10^{-6} mbar.

(28) If any problem exists call the Project Manager.

(29) Hit the Esc key and then hit the F6 key labelled "QUAD STATUS" in order to switch on the quadrupole analyzer. The value 106.5 should appear on the mass indicator of the quadrapole control panel of the instrument.

(30) Hit the F7 key labelled "DETECT MODE" followed by the F1 key labelled "HT ON/OFF".

(31) Check that the rate meter on the plasmaquad preamplifier panel shows a response of less than 50 Hz when the ratemeter is set to 100 Hz FSD. If the response is greater than 50 Hz call the project manager.

(32) Hit the "Esc" key followed by the "Q" and "Y" keys in order to return to the main ICPMS driver menu.

(33) Wait half an hour for the instrument to warm up.

B. Initialization of Analysis Run

(1) Load the start up and tuning rack of the autosampler with a urine sample cup containing about 100 mls of deionized water and the vials containing the tuning solution (TSO), the marker solution (MSO) and the WASH solution placing them in the positions marked on

the rack.

(2) Set the startup and tuning rack in the rightmost position of the autosampler tray.

(3) Load file #5 into the autosampler control keypad by striking the "EDIT" key, followed by the "5" key and then the "ENTER" key twice.

(4) Press the "START" key and the probe will enter the cup containing the deionized water.

(5) Set the quadrupole analyzer to 115 amu by turning the TIME switch on the Quadrupole control panel from "EXT" to "0.1" and adjusting the coarse and fine mass control dials.

(6) Press the "START" key again and the probe will enter the vial containing the tuning solution.

(7) Set the attenuation of the ratemeter in the Plasmaquad preamplifier panel to a full scale reading of 100 KHz.

(8) If the signal is greater than 20 KHz the response is acceptable otherwise call the project manager to tune the instrument.

(9) Return the TIME switch to "EXT".

(10) Press the "START" key again on the autosample control keypad and the probe will enter the WASH solution.

(11) Wait at least 3 minutes.

(12) Meanwhile load the peak jump isotope ratio program into the computer by carrying out the following:

(a) Hit the F6 key labelled "PJ ACQUIRE".

(b) Hit the F2 key labelled "IR PJ".

(13) Once the program is loaded hit the F9 key labelled "CALIB PARAM".

(14) Hit the F1 key labelled "PRINT INT" and then hit the "Y" key.

(15) Hit the F3 key labelled "PJ MARKER".

(16) Enter the name of the appropriate element menu and the message "waiting for marker sample" will appear.

(17) Press the "START" key again on the autosampler control keypad and the probe will enter the marker.

(18) Wait at least 2 minutes.

(19) Hit the F5 key labelled "ACQUIRE SAMP" in order to perform the marker run.

(20) Once the run is completed hit the F4 key labelled "MASS CAL" and then type "P" as the mass calibration type.

(21) Hit the "Esc" key.

C. Performance of Analysis Run

(1) Hit the F1 key labelled "QUEUE ACQUIRE".

(2) Enter the name(s) of the appropriate analysis file(s).

(3) Wait until the red light above the floppy disk drive A in the computer goes out and insert the first floppy diskette of the run and close the floppy diskette drive door.

(4) After the autosampler has been initialized, as indicated by an appropriate message on the

computer screen, press the "START" key on the autosampler control keypad and the probe will enter the WASH solution.

(5) Wait at least 5 minutes.

(6) Press the "START" key again and the probe will enter the urine sample cup containing deionized water.

(7) Wait at least 5 minutes.

(8) Press the "START" key again and the probe will move to the HOME position.

(9) Remove the startup and tuning rack from the autosampler.

(10) Set the five analysis racks into the autosampler.

(11) Load the racks with the first 70 samples of the analysis run as follows:

(a) Place the first sample in the forward left hand corner of the left most rack.

(b) Place the second sample behind it and continue placing samples in this way until the first column of seven sample locations is filled with vials.

(c) Repeat steps 11(a) and 11(b) for the next seven vials in the next column to the right and continue filling the racks in this way moving to the right of the autosampler until all 70 sample locations are filled with vials.

(12) Ensure that the caps have been removed from all of the sample vials.

(13) Hit any key on the computer keyboard two times.

(14) Wait about 30 seconds until the computer loads the controller of the autosampler. The message "ANALYSIS" will appear on the output display of the autosampler controller

keypad and the run will begin.

(15) Wait while the analysis is performed automatically.

(16) Replace the floppy diskette with another one when the message "COULD NOT WRITE THE FILE" appears on the computer screen and hit the "RETURN" key of the computer so that the analysis run can continue.

(17) After all the samples in the first autosampler tray (maximum 70 have been analyzed, replace the samples in the racks with the next samples to be analyzed by repeating steps (11) and (12).

(18) Queue a new procedure by performing steps (1) and (2).

(19) Repeat steps (17) and (18) until all the samples in the run have been analyzed.

D. Termination of Analysis Run

(1) Remove all sample racks from the tray of the autosampler.

(2) Switch the autosampler off, wait 10 seconds and then switch it on again.

(3) Set the startup and tuning rack back into the rightmost position of the autosampler tray.

(4) Remove the vials containing the tuning solution (TSO) and marker solution (MSO) from the rack so that only those containing the WASH solution and deionized water remain.

(5) Load file #7 into the autosampler control keypad by pressing the "EDIT" key followed by the "7" key and then the "ENTER" key twice.

(6) Press the "START" key and the probe will enter the vial containing the WASH solution.

(7) Wait about 5 minutes.

(8) Press the "START" key again and the probe will enter the deionized water.

(9) Hit the "Q" key followed by the "Y" key in order to obtain the ICPMS main driver program.

(10) Hit the F1 key labelled "INSTR CONTROL" to load the instrument control program.

(11) Hit the F1 key labelled "PUMPING STATE" and then answer the question on the screen by hitting the "Y" key.

(12) Disregard the message on the screen and hit any key to continue. The instrument will be turned off except for the plasma.

(13) Hit the "Q": key followed by the "Y" key and then repeat this step again in order to obtain the C:\> prompt on the computer screen.

(14) Type PARK <CR> and turn off the computer.

(15) Press the "START" key on the autosampler control keypad and the probe will return to the HOME position.

(16) Wait about 3 minutes.

(17) Turn off the peristaltic pump.

(18) Depress the switch marked "STANDBY" on the radio frequency generator in order to extinguish the plasma.

(19) Wait about 3 minutes until the front panel of the torch box cools to around room temperature.

(20) Switch off all the gases by depressing the buttons marked "NEB", "AUX" and "COOL" on the MS781 gas panel of the instrument.

(21) Release the peristaltic PVC tubes from the pump head.

(22) Dim the Tracor-Northern MCA in the instrument by turning down the button marked "INTENSITY".

(23) Turn off the autosampler.

(24) Turn off the surge protector below the computer.

(25) Close off the air supply by turning the black valve completely clockwise.

(26) Close off the argon by closing the two valves marked "Gas Supply and "Pressure Buildup" on the argon cylinder.

(27) Collect all diskettes and printouts and transfer them to the Data Processing Laboratory.

6.5 ANALYSIS WITH PERKIN ELMER 330 SPECTROPHOTOMETER

6.5.1 Solution Preparation and Silicon Analysis

Si-1 (Molybdate, direct)

Qty	Device	Manufacturer	Model	Calib. Req.
1	Spectrophotometer	Perkin Elmer	330	I
1	Balance	Mettler	AE100	II
3	Pipettes			
	200-100 μl	Labsystems	Digital	III
	5-10 ml	Oxford	Macro Set Transf.	III
	0.1-1 ml	Clay Adams	Selectapette	III

I: Calibrated with every analysis

II: Calibration accuracy: ± 1 mg
Calibration frequency: monthly

III: Calibration accuracy: ± 5%
Calibration frequency: monthly

Spectrophotometer Parameters

Cell: 1 cm x 1 cm x 4.5 cm (quartz)

Scan range: 840 nm - 620 nm

Peak wavelength: 812 nm

Base wavelength: 660 nm

Back correction range: 860 nm - 605 nm

Blank: DI water

Reagents

Silicon Standards: freshly prepare a set of silicon standards by dilution of an NBS traceable commercial standard in deionized water in order to produce one set of standards which covers the range of concentrations of Si to be used.

10% Ammonium molybdate: dissolve 2.5 g of Baker reagent grade ammonium molybdate in water, add 2.8 ml of concentrated reagent grade sulfuric acid dropwise while solution is stirring, dilute to 25 ml with water.

12.5% Tartaric acid: dissolve 3.125 g of reagent grade tartaric acid in water and dilute to 25 ml with water.

ANSA-bisulfite reducing agent:

Solution A: dissolve 3.125 g of reagent grade sodium bisulfite in 17.5 mL of water.

Solution B: dissolve 0.25 g of reagent grade anhydrous sodium sulfite in 5 mL of warm water and add 0.05 g of reagent grade 1-amino, 2-naphthol and 4-sulfonic acid (Eastman #360).

Mix solution A with solution B and dilute to 25 ml with water.

*Note: ANSA-bisulfite reagent should be stored in a cool dark place and prepared fresh every 2-4 weeks. All reagents should be prepared with deionized water using plasticware and stored in plastic bottles.

Procedure

(1) Prepare each sample by adding to a 25 ml plastic volumetric flask:

(a) recommended aliquot of sample (as per instructions of Laboratory Manager).

(b) Deionized water to neck of flask.

(c) 0.2 ml of 10% ammonium molybdate, shake well and wait 9-10 minutes.

(2) Add 1 ml of 12.5% tartaric acid, shake and wait 2 minutes.

(3) 0.2 ml of ANSA bisulfite reducing agent, dilute to 25 ml, shake well and wait 40 minutes.

(4) Perform the colorimetric measurement on the run of standards and samples as per procedure in section 6.5.2. Include at least one set of standards per run of samples determined.

(5) If concentrations of samples fall outside range of standards dilute the samples appropriately repeat the analysis.

6.5.2 PERKIN ELMER 330 SPECTROPHOTOMETER START-UP AND OPERATING PROCEDURE

1) Remove cover.

2) Remove pen cover.

3) Install appropriate cell holder.

4) Put in sample/reference compartment 2 identical cells filled with pure solvent.

5) Close sample compartment door completely.

6) Turn on line filter.

7) Turn power on. The instrument will calibrate itself for about 13 mins.

8) When the abscissa display stops at 500 nm and the recorder pen goes to 100% transmittance, turn off power to the D2 lamp immediately. Do not turn off D2 lamp if measuring under 350 nm.

9) Wait 10-20 minutes.

10) Press "ABS".

11) Press "SCALE" (e.g. 0-0.02).

12) Press "λ_1 - λ_2 SCAN" (according to element specifications).

13) Press "BACK CORR" (according to element specifications).

14) Align recorder pen with any vertical line on chart paper.

15) Press "λ_1 - λ_2 SCAN".

16) Press "SCAN".

17) Wait for cycle to be completed.

18) Remove cell from sample compartment, wash the cell with the sample to be analyzed and place sample in cell.

19) Place sample cell in sample compartment.

20) Close compartment door.

21) Press "WAVELENGTH MAX" and press "GOTO λ".

22) Input the appropriate values of the lower and upper scales to bring the peak into scale and press "SCALE".

23) Press "λ_1 - λ_2 SCAN".

24) Press "SCAN".

25) Analyze data as in the data processing section.

6.5.3 Procedure for Spectrophotometer Accuracy Verification

Equipment and Supplies

Qty	Device	Manufacturer	Model	Calib. Req.
1	Spectrophotometer	Perkin Elmer	330	I
1	Balance	Mettler	AE100	II
2	Pipettes 0.1-1 ml	Clay Adams	Selectapette	III
	5-10 ml	Oxford	Macro Set Transf.	III

Calibration Notes: I: Calibrated with every analysis; II: Calibration accuracy: ± 1 mg, Calibration frequency: monthly; III: Calibration accuracy: ± 5%, calibration frequency: monthly.

Spectrophotometer Parameters

Cell: 1 cm x 1 cm x 4.5 cm (quartz)

Scan range: 220 nm - 600 nm

Peak wavelengths: 257 nm, 350 nm

Base wavelengths: 235 nm, 313 nm

Back correction range: 200 nm - 620 nm

Blank: 0.001 n $HClO_4$

PROCEDURE FOR SPECTROPHOTOMETER ACCURACY VERIFICATION

Reagents

0.1 M $HClO_4$: in glacial acetic acid

1 g/l $K_2Cr_2O_7$: Dissolve 0.1 g of Potassium Dichromate of 99.9% purity or better (such as NBS Standard SRM136 or SRM935 Potassium Dichromate) in 100 ml of deionized water.

Procedure

Note: *This procedure should be performed monthly.*

(1) Prepare the following six standards in 100 ml flasks:

Standard #	0.1 M $HClO_4$ (ml)	1 g/l K_2/cr_2O_7 (ml)
1	1	0
2	1	2
3	1	4
4	1	6
5	1	8
6	1	10

(2) For each standard bring the final volume to the 100 ml mark on the flask neck with deionized water and shake thoroughly.

(3) Perform the colorimetric measurement as per procedure in section 6.5.2.

(4) Compare the measured absorbance values with those found in the NBS Special Publication Manual 260-54 Table 6 page 26 ("Standard Reference Materials" Certificaiton and Use of Acidic Potassium Dichromate Solutions as an Ultraviolet Absorbance Standard"). Log in results in the "Spectrophotometer Calibrations" L. N. and report to the Project Manager if the results fall outside a range of ± 5% of the NBS values.

7.0 Control of Samples and Release of Results

Acceptance of Samples and Release of Results

(1) Any sample entering the Analytical Laboratory Mass Spectrometry laboratory, in order to be analyzed, should be recorded in the Log-in/Log-out book. The recording is the sole responsibility of the originator of the sample. In addition, every sample should be accompanied by the standard "Request for Analysis" form, which provides adequate information about the sample (Format in procedure TPI-SH)

(2) After the completion of the analysis, any results in the form of printouts, compilations, tables, graphs, etc., as well as all of the remaining specimens (unless ordered by the originator to be discarded), should be transferred to the originator. The person receiving the results should acknowledge this in the Log-in/Log-out book. Any data remaining on the magnetic media should be transferred for further processing as explained below.

(3) Steps of Data Processing:

(a) Receive DCP disk from DCP operators.

(b) Transfer data files onto disk with data processing programs.

(c) Run processing programs to put data into files which are in a semi-matrix form (i.e. data printed in a chart).

(d) Data such as pH and Si Colorimetry should be taken from lab notebooks and entered manually.

(e) Print data in chart format.

(f) Give printouts to originator of samples.

(g) Destroy DCP files when processing is complete. Store data in chart format on data file diskettes.

8.0 DATA PROCESSING

This section includes a brief description and listings of computer programs used for data acquisition, data analysis, and data management.

1) Analytical Laboratory

A) Data Acquisition

The Analytical Laboratory uses a set of programs for recording and processing data from the DC Plasma Spectrophotometer. This set consists of a three part package. These three parts can be briefly described as follows: The first part records instrument readings, the second part performs any necessary calculations, and the last part prints out the results.

The first part of the package allows the operator to describe the conditions under which the instrument is being operated. The computer has only minimal control of the spectrophotometer and hence requires a fairly detailed description. After the description is entered, it will be recorded in a disk file. The first section of the program will next operate a carousel which presents samples to the instrument and record the readings made by the instrument on these samples into a disk file. When all samples have been measured control will be passed to the second part of the package.

The heart of the system is the second part of the package. The purpose of this part is

to use the instrument readings in the disk file to calculate a calibration curve for each sample and use this calibration to estimate a concentration for each sample. This calculation is based on fact that recalibration (or reslope) standards are mixed in with the samples on the carousel. Each sample is thus one of a small block of samples (typically three or four) surrounded by reslope standards. The instrument readings from the standards on either side of the block are used to construct the curve for that block of samples. The instrument readings on a sample and the calibration curve for that sample's block are used to calculate that sample's concentration. In the final stage of the calculation, the dilution factor for that sample is used to convert the measured sample concentration into the actual concentration of the sample before dilution. All of these results including standard deviations are placed in a final disk file. These final disk files can be used by subsequent programs if desired. When the final data file has been written the second part will pass control over to the third part.

The third part of the program set will read the final disk file and print a report of the sample concentrations with standard deviations. It will also make some elementary checks of the results and flag some conditions known to introduce errors in the analysis. Notable among these conditions is the case where the solution analyzed has a concentration higher than the high standard for the element.

Each of these packages was developed in order to ensure that all measurements and calculations in the analysis lab were made in a defined way. The automation of the calculations is particularly valuable in that errors of transcription and methodology are minimized.

The following programs are currently being used:

DCPDATA: Controls DCP equipment and calculates the averages of the concentrations.

REPRINT: This progrm reprints results of DCP.

OXIDE: This program calculates the percentage of oxides from PPM amounts.

RERUN: This program recalculates results of DCP test from data files on disk.

B) Data Analysis and Data Management

Various software manipulations must be performed in order to properly store the information gathered through the data acquisition programs on permanent storage disks and obtain data outputs in the desired format. Raw data from the DCP represent element concentrations and standard deviations expressed in ppm.

(1) A weekly schedule originating in the leaching laboratory and containing sampling information is sent to the Analytical Laboratory along with analysis request forms. This schedule is returned to the Data Processing Department along with a floppy disk containing raw data files from the DCP as well as results from the DIONEX if applicable. Similar tests are run together and given a reference name which is specified in the schedule sheet.

(2) Using the Reference name, raw data files are copied onto a scratch pod disk

(SPD). Names prefixed with a "D" denote files from the DCP. The suffix "D" and others with the exception of C, L, M and N indicate dilution files for DCP.

(3) The raw data transferred onto the scratch pod disk must be properly channeled into the permanent storage data disks and also used to produce printouts of results in the desired format. Two sets of programs are used for this purpose depending on whether samples from a single test or multiple test were run in the DCP.

To process the raw data, the data disk must have files containing all the initial pertinent information about a test run. These files are created using INDEX.

(4) The following programs are used for data management:

FASTDATA: This program combines DCP files into a single file that shows the concentration for each element and sample for a given test trial.

Leach test data processing programs are described in the technical procedure TPI-LT.

(2) General Chemistry Laboratory

Colorimetric Analysis:

Analytical methods for Colorimetric Analysis of Si, Fe and U have been in use in our laboratories for a considerable length of time. Detailed procedures for these tests are included in Section 6.5. Colorimetric data obtained from the Perkin Elmer Model 3 spectrophotometer

is translated into concentration data using a computer program called BLUEJ. This program uses absorption data of standards to calculate a calibration curve for the element being analyzed. The absorption data from the sample is used with this calibration curve to calculate concentration. The result is given in ppb.

9.0 ASSURANCE OF RELIABILITY OF ANALYTICAL RESULTS

Assurance of Reliability of Analytical Results

(1) The entire personnel of the Analytical Laboratory is required to be familiar with and to obey strictly all the individually relevant procedures included within the "Analytical Laboratory Procedures Manual".

(2) The final decision about acceptability of the results produced by the Analytical Laboratory is always the sole and exclusive responsibility of the originator of the sample.

(3) Internal acceptability criteria of the results produced by the Analytical Laboratory are as follows:

   (a) for single point measurements: originator's decision

   (b) for single-train measurements: originator's decision

   (c) for replicate-train measurements: scattering of average for every train not exceeding 3 standard deviations ('3σ' test).

(4) The analysis should be repeated in each one of the following cases:

(a) if so requested by the originator

(b) if a discrepancy of more than ± 50% is found between the actual and the expected (supplied by the originator) content of a certain analyte in the sample.

(c) if the results do not meet internal acceptability criteria (para. 3 above).

(d) if any form of analytical instrumentation malfunction is discovered. In this case immediate corrective action should be undertaken and internal investigation performed in order to evaluate to what extent and for how long such a malfunction has affected (if at all) the former analyses. If the discovery of a fault in the analytical system places in doubt results obtained and reported prior to such discovery, the originator(s) of the samples in question should be immediately notified.

10.0 RECORD KEEPING

The following record books should be kept and maintained in the Analytical Laboratory:

(1) Log-in/Log-out book to record sample admittance and release of results from the laboratory.

This book should consist of the following headings:

(a) Log-in Date - the date the sample was given to the Analytical Laboratory

(b) File Name - sample designation

(c) No. of Samples

(d) Originator

(e) Run Name - given if samples of different designations are analyzed within the same batch (run)

(f) Log-out Date - the day the results were received by the originator

(g) Person Receiving the Results - an originator or a person acting on his behalf

(2) Maintenance/Troubleshooting book for DCP Spectrophotometer.

This book should contain information on daily maintenance /troubleshooting or corrective action performed.

(3) Dionex IC book

This book, in addition to the maintenance/troubleshooting information (as described in paragraph 2 above), should contain the following records:

(a) Calibration chromatograms and curves

(b) Summary of analytical results (the table showing sample designation along with the concentrations of the analyzed anions)

(4) Maintenance/Troubleshooting Book for ICP-MS

This book should contain information on daily maintenance/troubleshooting or corrective

action performed.

(5) Calibration of Pipettes

All records of calibration data for pipettes, percentage of error detected should be maintained.

(6) Colorimetry Data

SiO_2 colorimetry data, verification of spectrophotometer accuracy and the spectral records obtained should be documented in addition to maintenance/troubleshooting log book of spectrophotometer.

(7) Other Records

Any round robin tests performed should be documented in a record book. Any general analysis performed in addition to above instrumental analysis should also be recorded in a separate book.

All the above laboratory record books are subjected to periodic surveillances as part of the Quality Assurance Program.

ATTACHMENT 6

TOXICITY CHARACTERISTIC LEACHING PROCEDURE (TCLP)

Title: **PROCEDURE FOR ANALYSIS OF TCLP EXTRACTS**

Document: TPI-TCLP.AL

Issued: 11/92 Rev # 0

UNCONTROLLED

Prepared by: Shantao Lai
Laboratory Manager

Reviewed by: Ian Pegg
Project Manager

Approved by: Pedro B. Macedo
Co-Director, VSL

C. Sivaprakash
Quality Assurance
Officer, VSL

Table of Contents

1.0 Scope

2.0 Applicability

3.0 Safety
- 3.1 Hazard Identification
- 3.2 Handling and Storage of Chemicals
- 3.3 Emergencies
- 3.4 Radioactive Hazard Mitigation
- 3.5 Safety Applicable to PCT Procedure

4.0 Requirements
- 4.1 Training

5.0 Equipment and Supplies
- 5.1 Standards
- 5.2 Equipment
- 5.3 Calibration of Pipettes

6.0 Procedure
- 6.1 Sample/Standard Preparation and Quality Control
- 6.2 DC Plasma Emission Spectrophotometer Operating Procedure

7.0 Specimen Control/Traceability

8.0 Data Processing

9.0 References

PROCEDURE FOR
ANALYSIS OF TCLP EXTRACTS

1.0 Scope

This procedure describes the analytical methods for analyzing the TCLP extract samples. The TCLP extract samples are prepared in the VSL Solution Chemistry (PCT/TCLP) laboratory using the VSL procedure (VSL-8.1.ANL) based on EPA TCLP Method 1311. These extract samples are received in the VSL analytical laboratory for analysis of inorganic contaminants listed in Table 1.

This procedures describes the steps involved in the preparation of samples, quality control operations, preparation of reference standards, analysis on DC Plasma Spectrophotometer, data calculation and reporting.

2.0 Applicability

This procedure applies to all employees trained and authorized to perform this analysis in the VSL.

This analysis method provides data useful for evaluating the toxicity of a solid. A solid waste exhibits the characteristic of toxicity if, using this analytical method, the extract from a representative sample of the waste contains any of the contaminants listed in Table 1 at a concentration equal to or greater than the respective value given in that Table.

Table 1 - Maximum Concentration of Contaminants for the Toxicity Characteristic

Contaminant	Regulatory Level (mg/L)
Arsenic	5.0
Barium	100.0
Cadmium	1.0
Chromium	5.0
Lead	5.0
Mercury	0.2
Selenium	1.0
Silver	5.0

3.0 SAFETY

This analytical method must be performed in accordance with all applicable quality assurance requirements of the laboratory performing the analysis and using the data.

This procedure may involve hazardous materials, operations, and equipment. All personnel who are authorized to perform this procedure must consult and establish appropriate safety and health practices and determine the applicability of regulatory limitations prior to use.

3.1 Hazard Identification

All samples received at CUA-VSL and handled at VSL laboratories are treated as potentially hazardous. At VSL one encounters both chemical and radioactive hazardous materials.

The "hazardous chemicals", referred to in this procedure, are defined in Section 8.3 of the CUA Chemicals Materials Safety Manual (CCMSM). A copy of CCMSM is available in every VSL laboratory.

Procedures for identifications and handling of hazardous materials as applied at VSL are prescribed in sections 8.22, 8.23, 8.24 and 8.25 of CCMSM and in sections 8.9, 8.10, 8.11, 8.12, 8.13 and 8.14 of the CCMSM.

A major element of hazard identification is the proper use of labels. At VSL, labeling of chemicals and other hazardous substances is done in accordance with Section 8.4 of the CCMSM, as well as in accordance with Materials Safety Data Sheets (MSDSs) provided by the manufacturers of the chemicals and other hazardous materials. Every VSL laboratory maintains the "work place chemical list". The list is made available to employees in accordance with Section 8.31 of CCMSM.

3.2 Handling and Storage of Chemicals

Handling of chemicals should be conducted according to Section 8.6 of the CCMSM. Storage of chemicals should follow section 8.8 of the CCMSM.

Special precautions should be taken in handling and storage of incompatible chemicals, solvents, compressed gases and radioactive materials in accordance with Sections 8.10, 8.12, 8.13, and 8.14 of the CCMSM respectively.

3.3 Emergencies

The following are considered laboratory emergency cases:

-chemical spills, to be dealt with according to section 8.17 of the CCMSM.

- fire and fire-related accidents, to be controlled according to section 8.21 of the CCMSM.

- personal contamination, to be treated according to section 8.19 of the CCMSM.

- injury, to be treated in accordance with section 8.18 of CCMSM.

Cases requiring minor first aid should be treated in accordance with section 8.20.

3.4 Radioactive Hazard Mitigation

Control and monitoring of personnel exposure and environmental radiation at VSL are performed in accordance with Chapter 3 of the Radiation Safety Manual (RSM) of the Catholic University of America. Application of the rules prescribed by RSM is the responsibility of each user working in the restricted area (rooms 37 to 40 of Hannan Hall) and the project managers.

Dr. Warren E. Keene, CUA - Radiation Safety Officer (CUA-RSO) and Dr. Isabelle Muller, VSL Radiation Safety Officer (VSL-RSO) are responsible for ensuring that the work is done safely and in a manner consistent with applicable regulations.

4.0 Requirements

4.1 Training

Training on TCLP extracts analysis procedure and equipment used in the analytical laboratory is given by the laboratory manager and/or by a trained and experienced person designated by the laboratory manager until the technician shows competence to use the method independently of direct supervision.

5.0 Equipment and Supplies

5.1 Standards

(1) All the analysis of TCLP extracts in the Analytical Laboratory are performed on relative basis by comparison with known standards.

(2) Sufficient stock of concentrated Standard Solutions should be kept in the Analytical Laboratory to allow at least 30 days of continuous work. (This means about 200 ml of solution containing approximately 1000 ppm of specimen.)

(3) The term "concentrated solution" means the solution contains 1000 ± 20 ppm of the analyte in question. No stock of more diluted standard solutions is allowed to be kept in the laboratory for a period exceeding 24 hours. Diluted solutions should be freshly prepared every 8 hours.

(4) Stock of standard solutions to be analyzed by DCP/Dionex

techniques should be purchased from major commercial sources. No use of solutions is allowed beyond expiration dates, if such dates are provided by the manufacturer or when the volume in the bottle falls below 1/8 of the total volume.

All standard solutions of cations shall be analyzed relative to NIST standards on a monthly basis and a limit of ± 5% will be acceptable.

5.2 Equipment

Qualitative handling of the solutions should be performed utilizing calibrated volumetric tools. These include volumetric flasks of various sizes and automatic dispensing pipettes (see Table in this section) with disposable tips (having fixed or variable volumes). To assure the accuracy of the volumetric tools, the following routine procedure should be applied:

- volumetric flasks : visually examine every volumetric flask prior to use. If there is any mechanical damage to the flask or any permanent, visible solid residue inside, the flask should be discarded. Carefully rinse the flask after use with DI water to avoid deposition of solids.

- dispensing pipettes : gravimetric check of the calibration is required every month as per procedure in section below). If the calibration cannot be adjusted, the tool should be replaced. If an adjustment has been performed, the calibration of the instrument should be immediately rechecked before it is returned to general use. The calibration check reports should be filed into the folder and kept in the Analytical Laboratory.

Qty	Device	Manufacturer	Model #	Calib. Req.
10	Auto pipettes			
1	50 microliter	Eppendorf	3130	I
1	100 microliter	Eppendorf	3130	I
1	200 microliter	Eppendorf	4700	I
1	1000 microliter	Eppendorf	4700	I
1	250 microliter	Eppendorf	4700	I
1	500 microliter	Eppendorf	4700	I
1	4 milliliter	Oxford	Macroset	I
1	5 milliliter	Oxford	Macroset	I
1	0.025-10 milliliter	Rainin	EDP-25	II
	Volumetric flasks	various		N.A.
	DCP Spectrophotometer	Spectrametrix	Spectra Span	With every run

I. Calibration check performed every month according to the following procedure

II. Calibration check performed every six months.

5.3 Calibration of Pipettes

Method: Gravimetric using an analytical balance.

Frequency: Monthly except Rainin pipette which is six monthly.
Required Accuracy: As specified in individual procedures or as per instructions of the Laboratory Manager.

(1) Obtain a "Pipette Calibration Check Record" form and supply requested information on pipette to be calibrated (e.g. manufacturer, model #, etc.).

(2) Tare out the weight of a 20 ml plastic vial on the balance.

(3) Pipet out deionized water from the pipette to be calibrated into the plastic vial. Record nominal capacity, actual capacity (weight displayed on the balance), and percent error under the appropriate columns.

(4) Repeat steps (2) and (3) 5-15 times. For variable volume pipettes perform the measurement for 2-5 volume settings.

(5) Calculate the percent error as follows:

$$\% \text{ ERROR} = \frac{(\text{Actual capacity}) - (\text{Nominal capacity})}{(\text{Nominal capacity})} \times 100$$

(6) Examine results and report deviations from required accuracy to the Laboratory Manager.

(7) Sign and date and file form in the 'Calibration Records'

6.0 Analysis Procedure

6.1 Sample/Standard Preparation and Quality Control

The following quality control operations have to be performed in the TCLP/analytical laboratory before and during the analysis:

(a) A minimum of one blank (extraction fluid) for every 10 extractions that have been conducted in an extraction vessel shall be employed as a check to determine if any memory effects from the extraction equipment are occurring.

(b) A matrix spike shall be performed for each waste glass unless the result exceeds the regulatory level and the data is being used solely to demonstrate that the waste property exceeds the regulatory level. If more than one sample of the same waste is being tested, a matrix spike needs to be performed for every twenty samples and the average percent recovery applied to the waste characterization.

(c) Matrix spike levels should be made at the appropriate regulatory threshold limits (See Table 1). However, if the expected extract contaminant concentration is less than one half

the threshold limit, the spike level may be one half the contaminant concentration but not less than the quantitation limit or a fifth of the threshold limit.

From the 1000 ppm stock standard solutions prepare the spiking solutions in the required concentration ranges according to Table 2. For example, solution #1 is prepared by pipetting 5 ml of 1000 ppm As, 5 ml of 1000 ppm Cr, and 1 ml of 1000 ppm Se into a volumetric flask and bringing to 100 ml with deionized water. Each of the three spiked sample are then prepared by adding 2 ml of spike solution to 18 ml of sample solution (i.e. 1:10 dilution of the spike solution by the sample solution).

	TCLP Level ppm	Spike	Spike ppm	ml of std made up to 100 ml	Dilution Factor	Standard Conc., ppm
Spike Solution #1						
As	5	1:10	50	5	20	1000
Cr	5	1:10	50	5	20	1000
Se	1	1:10	10	1	100	1000
Spike Solution #2						
Ag	5	1:10	50	5	20	1000
Ba	100	1:10	1000	100	1	1000
Cd	1	1:10	10	1	100	1000
Pb	5	1:10	50	5	20	1000
Spike Solution #3						
Hg	0.2	1:10	2	0.2	500	1000

Note: The reference standard solutions to be used for analyzing the spiked TCLP extract samples should have higher concentrations than the spiked concentration ranges. For e.g., to analyze a sample spiked with 5 ppm Arsenic the reference standard should have a concentration range of 7 ppm. Prepare the reference standard solutions from the stock standard solutions after taking the spiked concentrations into consideration.
see (j) below.

(e) The purpose of the matrix spike is to monitor the adequacy of the analytical methods used on the TCLP extract and to determine

whether matrix interferences exist in analyte detection. If the matrix spike recoveries are less than 50%, then the analytical methods are not performing adequately or use of the methods is inadequate. Use of internal calibration quantitation methods, modification of the analytical methods, or use of alternate analytical methods may be needed to accurately measure the contaminant concentration in the TCLP extract.

(f) Matrix spike recoveries are calculated by the following formula:

$$Percent\ recovery = \frac{A-B}{C} \times 100\%$$

where A = the concentration of the spike sample.
B = the concentration of the unspiked sample, and
C = the spike level

(g) The use of internal calibration quantitation methods shall be employed for a contaminant if: (1) Recovery of the contaminant from the TCLP extract is not at least 50% and the concentration does not exceed the regulatory level, and (2) The concentration of the contaminant measured in the extract is within 20% of the appropriate regulatory level. The following steps are to be followed:

(i) The method of standard additions shall be employed as the internal calibration quantitation method for each metallic contaminant.

(ii) The method of standard additions requires preparing calibration standards in the sample matrix rather than reagent water or blank solution. It requires taking four identical aliquots of the solution and adding known amounts of standard to three of these aliquots. The fourth aliquot is the unknown. Preferably, the first addition should be prepared so that the resulting concentration is approximately 50% of the expected concentration of the sample. The second and third additions should be prepared so that the concentrations are approximately 100% and 150% of the expected concentration of the sample. All four aliquots are maintained at the same final volume by adding reagent water or a blank solutions, and may need dilution adjustment to maintain the signals in the linear range of the instrumental technique. All four aliquots are analyzed.

(iii) Prepare a plot, or subject data to linear regression, of instrumental signals or external-calibration-derived concentrations as the dependent variable (y-axis) versus concentrations of the additions of standard as the independent variable (x-axis). Solve for the intercept of the abscissa (the independent variable, x-axis) which is the concentration in the unknown.

(iv) Alternately, subtract the instrumental signal or external-calibration-derived concentration of the unknown (unspiked) sample from the instrumental signals or external-calibration-derived concentrations of the standard additions. Plot or subject data to linear regression of the corrected instrumental signals or external-calibration-derived concentrations as the dependent variable versus the independent variable. Derive concentrations for unknowns using the internal calibration curve as if it were an external calibration curve.

(h) The sample must be analyzed within the following time periods (in days):

	From field collection to TCLP extraction	From TCLP extraction to preparative extraction	Preparative extraction To: Determinative analysis	Total elapsed time
Mercury	28	NA	28	56
Metals, except mercury	180	NA	180	360

NA = Not applicable

If sample holding times are exceeded, the values obtained will be considered minimal concentrations. Exceeding the holding time is not acceptable in establishing that a waste does not exceed the regulatory level. Exceeding the holding time will not invalidate characterization if the waste exceeds the regulatory level.

(i) A volume of at least 5 ml of the solution is required for analysis.

(j) Using a 2% HNO_3 solution as the matrix, prepare a Hi Std solution containing all of the elements of interest. The concentrations of elements in the Hi Std should somewhat (but no more than twice) exceed the expected concentrations of elements in the solution.

(k) Use a 2% HNO_3 solution as the Zero Std (Blank).

(l) Transfer the samples to be analyzed and the standard solutions to centrifuge tubes. At least two sets of standards will be required. Maximum of up to 32 samples can be analyzed per run.

(m) Load the automatic sampler carousel with the samples and the standard solutions according to the following sequence:

Position #1 : Zero Standard (always)
Position #2 : High Standard (always)
Position #3 - #12: Samples (maximum) including spiked sample and extraction fluid blank.

For higher positions the sequence can be repeated or terminated by the use of a zero standard followed by a hi standard.

Note: *There is a maximum of up to 10 samples allowed between two adjacent sets of standards. If certain series of samples consist of solutions having wide differences in concentration ranges (factor of 5 or more) and a cross-contamination is likely to occur, the samples can be separated by the zero standard. In that event, the zero standard has to be considered as a sample.*

If the sample (or samples) contain elements which have to be analyzed in a single element mode, perform the multiple element mode analysis first.

(i) Anlysis of the extracts is to be performed on DC Plasma spectrophotometer using the following DCP operating procedure.

6.2 DC Plasma Emission Spectrophotometer Operating Procedure
Manufacturer: Spectrametrix Inc.
Model #: Spectra Span III-B

Note: Refer to section 6.2.2 (pages 18 through 26) of VSL standard analytical procedure TPI-AL Rev # 1 of 10/92. This is a routine procedure for operating the DC Plasma Emission Spectrophotometer and is part of the analytical procedure manual.

7.0 Specimen Control/Traceability

Samples are received from the TCLP Laboratory and are accompanied by a Request for Analysis form (see TPI-SH for format). The samples are logged in the sample inward register in the analytical laboratory. After the analysis is performed the results are sent to the Laboratory Manager of TCLP laboratory for data evaluation. VSL procedure TPI-SH deals with the sample traceability forms and other formats for recording the data.

8.0 Data Processing

The Analytical Laboratory uses a set of programs for recording and processing data from the DC Plasma Spectrophotometer. This set consists of a three part package. The first part records instrument readings, the second part performs any necessary calculations, and the last part prints out the results. The details of this routine computerized data processing are contained in section 8.0 of the VSL standard analytical procedure TPI-AL, Rev # 1 of 10/92. This data processing operation is part of the routine procedure for analyzing samples on DC Plasma Emission Spectrophotometer contained in the procedure TPI-AL, Rev # 1 of 10/92.

From the analytical data of the spiked samples calculate the percentage recovery as in step (f) of section 6.1. Compare the contaminant concentrations in the TCLP extract with the thresholds identified in the appropriate regulations (Table 1).

9.0 References

Method 1311 Toxicity Characteristic Leaching Procedure, Federal Register, v. 55, No. 61, 1990

The Catholic University of America Chemical Materials Safety Manual, January 1989

The Catholic University of America Chemical Hygiene Program, in preparation

Radiation Safety Manual of The Catholic University of America, January 1980, W.E. Keene

ATTACHMENT 7

PRODUCT CONSISTENCY TEST (PCT)

UNCONTROLLED

Title: PROCEDURE FOR PCT TESTS

Document: TPI-PCT

Issued: 10/92 Rev # 0

Documents Incorporated

VSL-LT-16.ANL Issued 10/89

Prepared by: Shan-Tao Lai
Laboratory Manager

Examined by: Ian Pegg
Project Manager

Approved by: Pedro B. Macedo
Co-Director, VSL

C. Sivaprakash
Quality Assurance
Officer, VSL

Table of Contents

1.0 Scope

2.0 Applicability

3.0 Safety
- 3.1 Hazard Identification
- 3.2 Handling and Storage of Chemicals
- 3.3 Emergencies
- 3.4 Radioactive Hazard Mitigation
- 3.5 Safety Applicable to PCT Procedure

4.0 Requirements
- 4.1 Training
- 4.2 Definitions

5.0 Equipment and Supplies
- 5.1 Description of Equipment and Supplies
- 5.2 Calibrations
- 5.3 Standards
- 5.4 Reagents and Standards
- 5.5 Choice and Cleaning of Leach Vessel

6.0 Test Procedure
- 6.1 Sample Preparation
- 6.2 Washing the 100-200 Mesh Glass
- 6.3 Preparation of Standard Glass
- 6.4 Procedure

7.0 Specimen Control/Traceability

8.0 Calculation and Reporting

9.0 References and Notes

PROCEDURE FOR PCT TESTS

PRODUCT CONSISTENCY TEST (PCT)

1.0 SCOPE

This test procedure evaluates the relative chemical durability of both homogeneous and devitrified glasses by measuring the concentrations of the chemical species released from crushed glass to the test solution at 90°C.

This test procedure can specifically be used to evaluate whether the durability of glasses has been consistently controlled during production.

This test procedure can specifically be used to evaluate whether the radionuclide release properties of nuclear waste glasses have been consistently controlled during production.

2.0 APPLICABILITY

This procedure applies to all employees trained and authorized to perform this test in the VSL.

This test method provides data useful for (1) evaluating the chemical durability of glasses, (2) evaluating the radionuclide release properties of nuclear waste glasses, and (3) evaluating whether the glass durability or radionuclide release properties have been consistently controlled during long-term production. Accordingly, its applicability is widespread throughout manufacturing, research, and development. It can be used for specification acceptance.

This test method may be applicable to the evaluation of the chemical durability of glasses and the radionuclide release properties of nuclear waste glasses in natural environments. [7]

3.0 SAFETY

This test method must be performed in accordance with all applicable quality assurance requirements of the laboratory performing the test and using the data.

This procedure may involve hazardous materials, operations,

and equipment. All personnel who are authorized to perform this procedure must consult and establish appropriate safety and health practices and determine the applicability of regulatory limitations prior to use.

3.1 Hazard Identification

All samples received at CUA-VSL and handled at VSL laboratories are treated as potentially hazardous. At VSL one encounters both chemical and radioactive hazardous materials.

The "hazardous chemicals", referred to in this procedure, are defined in Section 8.3 of the CUA Chemicals Materials Safety Manual (CCMSM). A copy of CCMSM is available in every VSL laboratory. Procedures for identifications and handling of hazardous materials as applied at VSL are prescribed in sections 8.22, 8.23, 8.24 and 8.25 of CCMSM and in sections 8.9, 8.10, 8.11, 8.12, 8.13 and 8.14 of the CCMSM.

A major element of hazard identification is the proper use of labels. At VSL, labeling of chemicals and other hazardous substances is done in accordance with Section 8.4 of the CCMSM, as well as in accordance with Materials Safety Data Sheets (MSDSs) provided by the manufacturers of the chemicals and other hazardous materials. Every VSL laboratory maintains the "work place chemical list". The list is made available to employees in accordance with Section 8.31 of CCMSM.

3.2 Handling and Storage of Chemicals

Handling of chemicals should be conducted according to Section 8.6 of the CCMSM. Storage of chemicals should follow section 8.8 of the CCMSM.

Special precautions should be taken in handling and storage of incompatible chemicals, solvents, compressed gases and radioactive materials in accordance with Sections 8.10, 8.12, 8.13, and 8.14 of the CCMSM respectively.

3.3 Emergencies

The following are considered laboratory emergency cases:

-chemical spills, to be dealt with according to section 8.17 of the CCMSM.

- fire and fire-related accidents, to be controlled according to section 8.21 of the CCMSM.

- personal contamination, to be treated according to section 8.19 of the CCMSM.

- injury, to be treated in accordance with section 8.18 of CCMSM.

Cases requiring minor first aid should be treated in accordance with section 8.20.

3.4 Radioactive Hazard Mitigation

Control and monitoring of personnel exposure and environmental radiation at VSL are performed in accordance with Chapter 3 of the Radiation Safety Manual (RSM) of the Catholic University of America. Application of the rules prescribed by RSM is the responsibility of each user working in the restricted area (rooms 37 to 40 of Hannan Hall) and the project managers.

Dr. Warren E. Keene, CUA - Radiation Safety Officer (CUA-RSO) and Dr. Isabelle Muller, VSL Radiation Safety Officer (VSL-RSO) are responsible for ensuring that the work is done safely and in a manner consistent with applicable regulations.

3.5 Safety Applicable to PCT Procedure

All appropriate precautions for operation of pressurized equipment must be taken. To ensure safe operation, the leach containers should be designed to withstand the vapor pressure of water at the test temperature with an appropriate safety factor. The thermal expansion of water must be taken into account when filling the leach containers. Between filling at 4°C and testing at 100°C water expands by 4 volume percent. Overfilling may lead to pressures inside the container that exceed the design limits, and could lead to the failure of one or more parts of the vessel.

4.0 Requirements

4.1 Training

Part of the sample preparation for PCT tests is done in the radioactive restricted area. All restricted area workers shall be trained both by the laboratory supervisor regarding their specific duties and by the radiation safety officer of campus. Each restricted area worker must attend a course in radiation safety.

Training on PCT procedure and equipment used in the PCT laboratory is given by the laboratory manager and/or by a trained and experienced person designated by the laboratory manager until the technician shows competence to use the method independently of direct supervision.

4.2 Definitions

leachant - The solution that is being used, or is intended for use in leaching.[3]
leachate - The solution resulting from a leach test[3]
ASTM Type I water - Purified water with a maximum total matter content of 0.1 mg/L, and a minimum electrical resistivity of 16.67 MΩ*cm at 25°C, and no detectable soluble silica (consult ASTM D 1193). [1]
open system tests - A system is open if, during the process under consideration, transfer of matter either into or out of the system takes place, e.g. O_2 and/or CO_2 diffusion into or out of the leach vessel. [6]
closed system tests - A system is closed if during the process under consideration no transfer of matter either into or out of the system takes place. [6]
set of samples - Those which have been tested simultaneously in the same oven.
sample blank - A cleaned test vessel which has been filled with the same amount of leachant as the sample vessels but contains no glass sample

5.0 Equipment and Supplies

5.1 Description of Equipment and Supplies

Qty	Device	Manufacturer	Model	Calib. Req.
1	Balance	Sartorius	LC 6200S	I
9	Oven	Blue-M	Stabil-Therm OV-490A,OV-490A-3	II
1	pH meter	Corning	245	III
1	Graduated Cylinder			IV

2	Pipettes (1.0 and 5-10 ml)	Oxford/Eppendorf		V
	Thermometers	Various	-20 to 150 °C, ± 1 °C	VI
	Syringes with SS needles			N.A.
	Stainless steel sections	Whitey	#304L-HDF4-150 #SS-4-P #SS-4-VCO-4 #SS-4-VCO-1-4	N.A.
		Cajon	#SS-4-VCO-3-47A	
		Swagelok	#SS-400-C	
	Three-layer rubber septa	Hamilton	76006	N.A.
	Syringe filter	Gelman	4497	N.A.
	Racks for holding stainless steel containers			N.A.

I: Calibration accuracy: ±100 mg
Calibration frequency: monthly

II: Temperature monitored daily with thermometers that are positioned as recommended by the manufacturer and meet NIST Specification, Monograph 150.

III: Calibration accuracy: +/-0.05 pH units
Calibration frequency: daily or every 25 measurements.
See VSL-LT

IV: Calibrated before first use.

V: Calibration accuracy: ± 5%
Calibration frequency: monthly

VI: Meeting NIST Specification, Monograph 150

Leach Vessels - 304L stainless steel leach vessels of 150 mL capacity designed to take internal pressures of at least 75 psi without leaking. The stainless steel vessels require a rubber disk

septa in order to remain sealed.

Mechanical Convection Oven - A laboratory oven suitable for operation up to 260°C and capable of maintaining ± 2.0°C throughout the entire interior of the oven at the test temperature.

Temperature Measurement - Thermistor probe and/or thermocouple with a facility for continuous monitoring of the temperature of the convection oven during the test duration.

Balance - a balance which will provide the following sensitivity: 0.25% of the largest and smallest masses to be measured including the mass of the reagents, sample, leachant, leachate, leach vessel, and any required combinations.

Weight Calibration Set - NIST Class S-type weight calibration set ranging between 100 mg - 1 kg, or equivalents, traceable to NIST.

Crushing Device - Any mechanical or manual crushing device which will avoid steel contamination in the crushed glass specimen. Grinding devices made of tungsten carbide, agate, sapphire, or dense alumina are acceptable.

Sieves - A nest of 3 inch, 5 inch, or 8 inch U. S. Standard ASTM stainless steel or brass sieves. The nest shall include the covers and pan, including the No. 100 (149 µm) and No. 200 (74 µm) sieves.

Flasks - Class A or calibrated volumetric labware.

Pipettes - Calibrated and precleaned pipette tips.

Syringes and Syringe Filters - Precleaned syringes and 0.45 µm syringe filters (for example Gelman #4497).

Sample Vials - Presterilized sample vials and caps.

pH Meter - pH meter with an accuracy of ± 0.2 pH units.

Milli-Q Water Purification System - Water purification system for producing ASTM-Type I water.

Ultrasonic Cleaner - Size to be compatible with cleaning of several leach vessels simultaneously.

High Pressure Air or Freon Pressurized Canister - To dry

sieves after washing; a drying oven is an acceptable alternative.

5.2 Calibrations

Note: See VSL-LT for detailed calibration procedures.

Calibrations - Initially calibrate all instruments used in this test. Perform periodic calibrations during use of the instrument to minimize possible errors due to instrumental drift.

Calibration and Standardization Schedule:

Thermistor or thermocouple - Calibrate annually with NIST Standards or ice/boiling water.

Balance - Have the balance calibrated on a monthly basis.
pH meter - Initially and after completion of a set of measurements with commercial buffer solutions that bracket the solution pH being measured.

5.3 Standards

Reference Glass - A reference glass of choice, similar in composition to the glass being tested, is to be run in triplicate along with each batch of glasses tested.

Multi-element Solution Standard - A reference solution of choice, containing the major elements of the composition of the leachate being tested, is to be submitted along with each batch of leachates for multi-element analysis. The reference solution standard should be traceable to NIST, or a comparable equivalent used, and should have a certified shelf life.

pH Buffers - commercial pH buffers to bracket the measured pH range of the leachant and leachate.

5.4 Reagents and Standards

Reagent Grade Acids - Reagent grade HNO_3 for cleaning of leach vessels.

High Purity Acid - High purity concentrated HNO_3 for acidification of leachates.

Solvents - Ethyl Alcohol 95% pure and reagent grade acetone.

ASTM Type I Water - Type I water shall have a minimal electrical resistivity of 16.67 M Ohm cm at 25°C (consult ASTM D1193).

The source water shall be passed through Milli-RO15 System which contains 6 cartridges (Ful-Flow, Teel, Lifegard, Rogard Pre filter and Milli-Ro-20 Spiral-Wound Reverse Osmosis) and Milli-Q System that consists of five cartridges (Lifegard, Super-C, two of Ion-Exchanger, and Millipore DI-12). Pass the purified water through an in-line conductivity cell to verity its purity.

5.5 Choice and Cleaning of Leach Vessel

Stainless Steel Vessels - Stainless steel vessels made of 304L are to be used in all tests.

Preparation of Vessels:

Identification of Vessels - A unique identifying number should be permanently etched on each leach vessel.

Identification of Vessel Cleaning History - Each batch of cleaned leach vessels will be labeled with a unique batch number. A log book of the leach vessel number and date the cleaning is completed shall be kept.

Cleaning of New Stainless Steel Vessels - New 304L stainless steel vessels shall be cleaned by the following procedure:

(a) Clean the vessels and lids (without the gaskets) ultrasonically in reagent grade acetone for 5 minutes.

(b) Clean the vessels and lids ultrasonically in 95% ethanol for 5 minutes.

(c) Rinse the vessels and lids 3 times with ASTM Type I water.

(d) Rinse the vessels and lids in 0.16M HNO_3 (1 wt% HNO_3) and heat on a hotplate 90°C for 1 hour.

(e) Rinse the vessels 3 times with ASTM Type I water.

(f) Submerge the vessels and lids in fresh ASTM Type I water for

1 hour.

(g) Rinse with fresh ASTM Type I water.

(h) Fill the vessel 80-90% full of ASTM Type I water. Close the lid and leave in a 90°C oven for a minimum of 16 hours.

(i) Remove the vessels from the oven, take an aliquot of the wter and measure the pH (consult ASTM D1293).

(j) If the pH is not in the range 5.0-7.0, repeat steps (f) through (i).

(k) If the 5.0-7.0 pH range cannot be achieved by 3 repetitions of steps (f) through (i) then repeat the cleaning and testing procedure starting at Step (d)

(l) Dry vessels and lids at 90°C for a minimum of 16 hours, and store inside a clean container until needed.

Cleaning of rubber septa:

(a) Handle the rubber septa only with clean tongs.

(b) Clean each rubber septa ultrasonically in 95% ethanol in 1 minute.

(c) Clean each rubber septa under flowing ASTM Type I water for 3 minutes.

Cleaning of Used Stainless Vessels - Used stainless steel containers shall be cleaned according to the following procedure:

(a) Remove as much as possible of the glass inside the container to a 20 ml vial, add leachate solution, then label the vial. Flush the container using flowing tap-water for 2 minutes, brush the inside using plastic brush for 2 minutes, and rinse in tap-water.

(b) Fill each container with 120 ml 30 wt% NaOH, seal, then place in a 150 ^{0}C oven for at least 16 hours (overnight is recommended).

(c) Remove one of the lids from the sealed container, empty, and

flush the container with flowing tap water for 2 minutes (both inside and outside the container). Remove the other lid from the container.

(d) Place containers in a large plastic bottle, fill with tap water and place the open bottle in a 90 ^{0}C oven for one hour.

(e) Drain containers and check the inside of each container for the remaining glass using a pen flashlight. If glass is found, repeat steps (a) through (d). Otherwise, proceed to next step.

(f) Place the containers in a large plastic bottle filled with 1.5 wt% HNO_3(take 85.7 ml 70% HNO_3 and dilute to 4000 ml) and place the open bottle in 90 ^{0}C oven for 16 hours.

(g) Drain the containers and rinse them with DI water 3 times. Place the containers in 1 wt% HNO3 (take 57.1 ml 70% HNO3 and dilute to 4000 ml) at 90 ^{0}C for 1 hour.

(h) Rinse each container with DI water 3 times and dry for one hour at 90 ^{0}C oven.

(i) Rinse with DI water 3 times.

(j) Reassemble containers and fill about 90% full with DI water and place them into oven overnight.

(k) Measure the solution pH. If the pH is in the range of 5 to 7, send 20 ml for analysis of Si and Fe.

(l) If the pH is out of above range, repeat steps (b) to (g).

If the Si concentration is more than 3 ppm, repeat steps (b) to (g).

(m) Dry vessels, lids, and gaskets at 90°C for a minimum of 16 hours and store inside a clean container until needed.

6.0 Test Procedure

6.1 Sample Preparation:

(a) **Sample Handling** - All glass must be handled with clean equipment and stored in clean container.

(b) **Choice of Appropriate Sample** - Samples of monolithic glass may either be fabricated individually or taken from large samples of glass. Choose representative monolithic sample free of surface contamination. If contamination is suspected flush the sample surface with ASTM Type I water and dry before crushing.

(c) **Choice of Sample Mass** - The reference ratio of leachant volume to sample mass (V_{soln}/m_{solid}) is 10 ± 0.1 mL/g. The volume of leachant is constrained by the volume of the leach vessel chosen. For example, a maximum volume of 100 mL and a sample mass of 10 g is recommended when using 150 mL vessels. Smaller amounts may be used, e.g. 4 g in 40 mL of leachant contained in a 40 mL vessel. Less than 1 g of specimen is not recommended.

(d) **Number of Sample Replicates** - A minimum of three replicate samples shall be used to provide estimates of experimental variability.

(e) **Crushing and Sieving Glass** - If the sample has dimensions larger than ¾", wrap the sample in a clean plastic bag and break it into smaller fragments with a hammer. For radioactive glass it may be necessary to use a steel mortar and pestle but caution must be exercised not to transfer steel particulates to the glass due to the known interactions of steel and glass in solution.

(f) Transfer glass fragments into a clean manual or mechanical grinder of choice. If a mechanical grinder such as a Tekmar® Grinding Mill is used with a tungsten carbide blade, grind in short bursts of approximately 5 seconds due to the brittle nature of the tungsten carbide blade. Do not use mechanical grinders with stainless steel blades unless they are 304L or 316L stainless steel due to the known interactions of lower carbon containing steels and glass in solution.

(g) Clean brass or stainless steel sieves, catch pan and lid before and after every use by flushing them with deionized water from all directions. Dry immediately with high pressure air, or in an oven. Do not use solvents and/or high temperatures as the mesh has a protective film to inhibit corrosion.

(h) Visually inspect the sieves for holes or tears before every use. Transfer crushed glass to the clean nest of sieves placing the fragments on a coarse sieve, e.g. 40 mesh in order to protect the finer sieves of 100 mesh (149 micron) below. The 200 mesh (74 micron) sieve should be under the 100 mesh sieve with a catch pan below.

(i) Place the lid on the nest of sieves and sieve for at least 5 minutes.

(j) Remove the 100 mesh sieve containing +100 mesh glass fraction. Then remove the 200 mesh sieve containing the -100 to +200 mesh fraction.

(k) Tap the 200 mesh sieve lightly over colored paper. For example if the glass is light colored paper, tap the sieve on dark paper. For dark glass, e.g. black nuclear waste glass, tap the sieve on white paper. If a significant amount of powder appears on paper, repeat steps (d) through (f) until no glass passes through the 200 mesh sieve.

(l) Transfer the -100 to +200 fraction of the sieved glass into a clean container labeled with the sample identification. The date and the name of the person preparing the sample should also appear on the container.

(m) If additional material is needed, recrush the +100 mesh size fragments or repeat step (a). When new glass fragments have been prepared repeat steps (c) through (g)

Enter sample identification, date, and name of the person preparing the sample on a sample log book.

6.2 Washing the 100-200 Mesh Glass:

(a) Place approximately 35-40 grams of sieved glass in a clean 200 mL glass beaker. Do not exceed the 20 mL mark on the beaker.

(b) Forcibly add 25-30 mL of ASTM Type I water from a squirt bottle to the glass. During this addition, the squirt bottle should be moved in a circular motion so that the wash stream agitates all the glass.

(c) Allow the glass-water mixture to settle 15 seconds then decant off the water.

(d) Repeat steps (b) to (c).

(e) Repeat step (b).

(f) Prepare the ultrasonic cleaner by filling with water to

0.5". Place the beaker from step (e) in the ultrasonic cleaner for 2 minutes. After removing the beaker from the cleaner, decant the water from the beaker and discard.

(g) Repeat (f).

(h) Forcibly add 25-30 mL of absolute alcohol from a squirt bottle to the glass. During this addition, the squirt bottle should be moved in a circular motion so that the wash stream agitates all the glass.

(i) Place the beaker from step (h) in the ultrasonic cleaner for 2 minutes. After the 2 minutes decant the alcohol from the beaker.

(j) Repeat step (i) two more times.

(k) Put the beaker full of cleaned glass in a 90°C oven overnight to dry. Glasses can be stored in a clean, sealed and labeled container until they are to be used. Before use the crushed glass must be redried at 90°C overnight so that the powders do not contain adsorbed water when weighed.

(l) Enter sample identification, date, and name of the person performing the sample washing on a sample washing log book.

6.3 Preparation of Standard Glass

(a) **Standard Glass Handling** - same as for sample glass.

(b) **Standard Glass Sample Size** - same as for sample glass.

(c) **Number of Standard Glass Replicates** - same as for sample glass.

(d) **Crushing, Sieving, and Washing of Standard Glass** - same as for sample glass.

6.4 Procedure

6.4.1 **Number of Sample Replicates** - All tests for each glass should be carried out at least in triplicate.

6.4.2 **Number of Standard Glass Replicates** - A standard glass test shall be run at least in triplicate as part of each "set" of samples.

6.4.2.1 A "set" of samples is considered to be those which are tested simultaneously in the same oven.

6.4.3 **Number of Vessel Blanks** - A blank is considered to be a cleaned test vessel which has been filled with the same amount of ASTM Type I water as the sample vessels but contains no glass. For each "set" of samples, two blanks from the same batch of cleaned vessels shall be used. If more than one batch of cleaned vessels is used in a "set" of samples, then two blanks from each batch of vessels will be used. Three blanks are recommended for tests in ground water and other leachants which have high concentrations of glass components.

6.4.4 **Leaching Procedure** - Each sample, standard, and blank shall be tested according to the following procedure:

6.4.4.1 Calibrate the pH meter. Collect a sufficient amount of fresh ASTM Type I water from the Milli-Q Water Purification System to fill all the leach vessels in the "set" of samples, including standards, and blanks being tested. Ensure that the Type I water meets the minimum electrical resistivity of 16.67 M Ω cm at 25°C. Record the resistivity of the water collected on each sample, standard, and blank. Determine the pH of an aliquot of ASTM Type I water collected. Use the water collected within 3-6 hours as slow absorption of gaseous species from the air can cause the initial conductivity and pH of type I water to slowly drift with time (consult ASTM D1125). Record the initial measured pH, the temperature at which the pH was measured, the pH values of the calibration solutions used, and the identification number of the pH meter used. Discard the aliquot of ASTM Type I water used for the pH measurement.

6.4.4.2 Check the balance calibration. Weigh the empty vessel with the lid. Record the vessel number and the initial weight.

6.4.4.3 Place the desired amount of prepared glass in the clean leach vessel. Replace the lid and reweigh the vessel, lid and sample. Record this composite weight. The difference between the two vessel weighings should be recorded as the weight of the glass.

6.4.4.4 Add ASTM Type I water equivalent to 10 times the mass of glass added as calculated in 6.4.4.3 so that $(V_{soln}/m_{solid}) = 10 \pm 0.1$ mL/g. Swirl to wet the glass. Close and seal the leach container with a wrench and reweigh. Record the total weight. For blanks add the same amount of water but no sample.

6.4.4.5 Shake each container thoroughly and place sample vessels horizontally into the preheated 90°C oven. The 7 day recommended test period starts at this time. Record that date and time (d:h:min).

6.4.4.6 Leave sample vessels in oven at test temperature between 16-24 hours before testing the tightness of the lids. Quickly retighten loose lids while the vessels are hot, weigh and record the weights again, and return immediately to oven for the remainder of the test duration. If the weight loss of a vessel is more than 1% of the total weight of its leachant, ASTM Type I water can be added to the vessel then retighten the vessel to continue the test. The sample should be discarded if the weight loss is more than 10% of its total leachant.

6.4.4.7 The testing period shall be controlled to within plus or minus 1% of the total time period of the test.

(a) One day before sampling stand the vessels vertically with the rubber septum at the top in a rack in the oven.

(b) On the day of sampling remove the loaded stainless steel containers from the oven. Try not to shake the containers. Weigh the container and record the weight.

(c) Unscrew the top using a wrench.

(d) While the vessel is still close to the test temperature remove about 4 ml of leachate from each container using a polypropylene syringe with a stainless steel needle which is inserted through the rubber septum. Detach the stainless steel needle from the syringe and attach the 0.45 μm syringe filter to the syringe. Filter the leachate through the filter into a clean vial. The sampling should be performed as soon as the vessel is removed from 90°C oven in order to obtain leachate concentrations which closely represent the 90°C equilibrium under the test conditions; this is very important for future data modelling.

6.4.4.8 Pipette 1.0 ml of the sampled leachate to a vial prefiled with 20.0 ml 1% HNO_3 solution which made from high-purity nitric acid and ASTM Type I water and label appropriately for analysis.

6.4.4.9 Pour the remaining 3 ml of the sampled leachate into a 4 ml plastic cup placed in a water bath at room temperature and measure pH. (It is very difficult to determine a reliable 90°C pH value. The leachate is, therefore, quenched to room temperature to

a obtain stable pH reading, which can be easily translated into 90°C pH value with the help of the geochemical code PHREEQE). Record pH measurement and temperature.

6.4.4.10 Inject enough fresh ASTM Type I water into the container using another clean polypropylene syringe with a stainless steel needle which is inserted through the rubber septum to recover the original weight of the vessel before sampling.

6.4.4.11 When sampling is finished, replace and tighten the stainless steel cap with a wrench. Weigh the container again and record the weight.

6.4.4.12 Return the containers to the oven and position them horizontally to continue the test.

6.4.4.13 Take 1 mL of the leachate used in the pH measurement and add 20 mL ASTM Type I water. Label this as back-up solution, and retain it until the primary solution is analyzed.

6.4.4.14 Measure cation and anion concentrations of glass leachates, standard glass leachates, blanks, and multielement solution standards using equipment calibrated with standards traceable to NIST if suitable standards exist. Report the precision and accuracy of the analytic techniques used. Although results should normally be accurate to within ± 10%, this will not be possible when concentrations in the solution approach detection limits. The detection limits for each analysis should preferably accompany the reported results.

6.4.4.15 For radioactive glasses, submit appropriately acidified aliquots for all desired radiochemical analyses.

6.4.4.16 Analysis of the solids on the filter or the remaining solid glass sample is optional. If solids analysis are not desired the filter and solid glass sample may be discarded. If solids analysis is desired, record the appearance of the specimen powder, e.g., visible changes in color, agglomeration, and gelatinization. Wash the specimen powder from the leach container with pure water onto a clean watch glass and dry at 90°C. A temperature of 90°C will only drive off adsorbed moisture and not water of hydration. After drying, store in a clean container or analyze.

7.0 Specimen Control/Traceability

Samples are received from the Glass Preparation Laboratory by logging out the samples on the glass log form maintained in the Glass Preparation Laboratory. The receiver signs, dates, and enters in the glass log form the PCT lab notebook number and page number where the sample receipt will be recorded. The traceability with the Glass Preparation Laboratory is thus maintained. VSL procedure TPI-SH deals with the sample traceability forms and other formats for recording the data.

8.0 Calculation and Reporting

8.1 **Use of Multielement Standard** - Calculate the average and standard deviation of the analytical results of the multicomponent standard. If the average values agree within 10% of the standard values then the analysis is considered acceptable.

8.2 **Use of Blanks** - Blanks are used to check if sources of contamination are present due to incorrect vessel cleaning or contamination. Corrections of up to 1% of any contaminant element is subtracted from the leachate concentrations for all samples using the data from the replicate blanks from the same batch of cleaned vessels. If corrections of >1% of any contaminant element occur, all the tests performed using vessels from that vessel cleaning batch must be repeated.

8.3 **Calculations of Leachate Concentrations** - Leachate concentrations, especially those for the major soluble elements in the glass (Li, B, Na, K, and Si) are calculated for the test glasses and the standard glass.

8.3.1 Calculate the final leachate volume (V_f) for each test including blanks. The amount of water loss is equal to the weight loss that occurred during heating.

8.3.2 Calculate the average blank concentration in appropriate units for each element, i, for each series of tests, from the following equation:

$$c_i(blank) = \frac{1}{(T)\,(V_i)} \sum_{m=1}^{T} c_i(m) \cdot V_f(m)$$

where

c_i (blank)	=	average blank concentration
c_i (m)	=	concentration observed in the mth blank replicate
V_f (m)	=	final volume of leachate measured in the mth blank replicate
V_i	=	initial volume of leachate in blank
T	=	total number of replicate tests performed

8.3.3 Calculate the corrected leachate concentration of each replicate from the following equation:

$$c_i^1(n) = \frac{c_i(n) \cdot V_f(n)}{V_i(n)} - c_i(blank)$$

where

c^1_i (n) = leachate concentration for the ith element in the nth replicate corrected for any volume change in the leachate during the test and for the average blank concentration.

c_i (blank)	=	average blank concentration
c_i (n)	=	concentration observed in the nth

		sample replicate
$V_f(n)$	=	final volume of leachate measured in the nth sample replicate
$V_i(n)$	=	initial volume of leachate in the nth sample replicate

If $c^1_i(n)$ and $C_i(n)$ differ by more than 14% for boron, 17% for silicon, and 26% for sodium due to either volume changes or high concentrations in the blanks the data should not be used.

8.3.4 Calculate the average corrected leachate concentration for element i from the equation:

$$c_i(average) = \frac{1}{T}\sum_{n=1}^{T} c_i^1(n)$$

where

c_i (average) = the average corrected leachate concentration of element i observed in the test.

8.3.5 Calculate the standard deviation for the corrected leachate concentrations for various elements.

8.4 **Reporting and Deviations** - All data should be recorded in a laboratory data book, a floppy disk and a hard disk. Deviations from the test method and the expected effect on the results should be discussed.

8.5 Precision and Bias

8.5.1 **Precision:**

The data used to generate the measures of precision is the result of intra- and inter-laboratory round robins. These measures are typical of the methods applied to the glasses and standards used in the round robins, and are not all inclusive with respect to other types of glasses. The measures of precision were determined in accordance with procedures in ASTM Practice E691. These

measures are designated as follows:

Repeatability: the standard deviation for within-laboratory determinations.

Reproducibility: the standard deviation for between-laboratory determinations.

PCT Within-Laboratory Precision:

Approved Reference Glass ARM-1 (a simulated borosilicate nuclear waste glass). Within-Lab relative standard deviation for B was 2.3% and for Si was 1.8%.

PCT Between - Laboratory Precision:

Approved Reference Glass ARM-1 (a simulated borosilicate nuclear waste glass). Between-laboratory standard deviation (including within laboratory and between laboratory %RSD) for B was 12% and for Si was 10.2% for laboratories with varying analytical capabilities.

NIST Reference Glass SRM 623 (a borosilicate glass). Between-laboratory standard deviation (including within laboratory and between laboratory %RSD) for B was 19.8%.

8.5.2 **Bias:**

The average corrected leachate concentrations for the standard glass allow assessment of long term bias or variability of the test, e.g. how reproducible the experimental variables such as oven temperature, sieving, leachate analyses, etc. are over time. Use of a standard glass provides the basis for both within-laboratory and between-laboratory data comparisons.

9.0 REFERENCES and NOTES:

ASTM Standards:
D 1193 Specification for Reagent Water [1]
D 1193 Standard Test Methods for pH of Water [1]
D 1125 Test Methods for Electrical Conductivity and resistivity of Water [1]
E 691 Standard Practice for Conducting an Interlaboratory Study to Determine the Precision of a Test Method [2]

Other Documents:
Nuclear Waste Materials Handbook: Test Methods [3]
Product Consistency Test Round Robin Conducted by the Materials Characterization Center-Summary Report [4]
Product or Consistency Test (PCT) for DWPF Glass [5]
Nuclear Waste Glass Product Consistency Test (PCT) Method [17]

1. Annual Book of ASTM Standards, Vol 11.01
2. Annual Book of ASTM Standards, Vol 14.02
3. DOE/TOC-11400, Revision 7, July 31, 1986.
4. Pacific Northwest Laboratory, PNL-6967, September 1989.
5. Part I. Test Development and Protocol, DPST-87-575, Savannah River Laboratory, Aiken, SC 29808, July 30, 1987.
6. American Geophysical Union, Dictionary of Geological Terms, 1976.
7. J.W. Shade and D.M. Strachan, Am. Ceram. Soc. Bull 65 [12] 1568-1573, 1986.
9. This does not preclude using natural groundwater in place of ASTM Type I Water if data on glass performance under repository relevant or other natural conditions is desired.
10. A nuclear-grade resin mixture of the strong base cation exchanger in the hydroxide form with a one-to-one cation to anion equivalence ratio, such as that available from the Millipore Corp, Bedford, Ma 01730; Barnstead Co., 225 Rivermoor St., Boston, MA 02131; Illinois Water Treatment Co., 854 Cedar St., Rockford, IL 61105; or Vaponics, Inc., 200 Cordage Park, Plymouth, NA 02360, is suitable.
11. An in-line filter such as those made by the Millipore Corp., Bedford, MA 01730; Gelman Instrument Co., 600 S. Wagner Road, Ann Arbor, MI 48106; and Schleicher and Schuell, Inc., 540 Washington St., Keene, NH 1003, has been found satisfactory.
12. G.L. McVay and C.Q. Buckwalter, Effect of Iron on Waste-Glass Leaching, "J. Am. Ceram. Soc., 66, 170-174 (1983).
13. The SA/V of the sample/leachant system shall be examined in the range in which the parameter (SA/V)*(time in days) is ≥100 cm^{-1} day to avoid short term test fluctuations. For 100-200

mesh particles of density of ~2.75 g/cc this converts to a (m/V) of 0.1 at 7 days or 0.7 (g/cc)*day. The 7 day recommended test duration, therefore, does not preclude longer test durations.

14. If presterilized sample vials are not available for the leachates at the termination of the leaching test, boil polyethylene specimen bottles and caps for 1 hour in ASTM Type I water. Allow the specimen bottles to remain in the water overnight but reduce the temperature so that boiling has stopped. Remove the bottles and caps and dry in an oven at 80°C.
15. Other acidification concentrations can be used if these are found to be more compatible with the acidification concentrations used in your analytic facility for cation analysis.
16. Precision and bias cited from references 4 and 5 are for Version 1.0 and 2.0 of the PCT which did not require sample washing. Better precision has been observed when samples are washed but sample bias remains the same (C.M. Jantzen and N.E. Bibler, in preparation).
17. C. M. Jantzen and N. E. Bibler, "Nuclear Waste Glass Product Consistency Test (PCT) Method, Version 3.0", Savannah River Laboratory.

ATTACHMENT 8

MELT VISCOSITY AND SCANNING ELECTRON MICROSCOPY (SEM)

VSL Technical Procedure **UNCONTROLLED**

Title: Glass Characterization

Document: TPI-GC Rev # 1

Documents Incorporated:

TPI04.WVN	Rev #0
TPI-GC.WVN	Rev. # New

Date Issued: 10/91 Rev # 0

Date Revised: 9/92 Rev # 1

Prepared by: Fr. Andrew Buechele Project Manager	Ian L. Pegg Project Manager
Approved by: Pedro B. Macedo Co-Director, VSL	C. Sivaprakash Quality Assurance Officer, VSL

GLASS CHARACTERIZATION

Table of Contents

1.0 PURPOSE

2.0 APPLICABILITY

3.0 SAFETY
- 3.1 Hazards
- 3.2 Hazard Mitigation
  - 3.2.1 Identification of Hazards
  - 3.2.2 Handling and Storage of Chemicals
  - 3.2.3 Emergencies
- 3.3 Personnel Protection

4.0 REQUIREMENTS

5.0 REFERENCES

6.0 PROCEDURES
- 6.1 Melt Viscosity Determination
  - 6.1.1 Equipment and Supplies
  - 6.1.2 Operating Procedures
  - 6.1.3 Calibrations
    - 6.1.3.1 Calibration of the Viscometer
    - 6.1.3.2 Calibration of the Spindle
  - 6.1.4 Specimen Control/Traceability
  - 6.1.5 Computerized Data Analysis
  - 6.1.6 Record Keeping
- 6.2 Microstructural Characterization of Glasses
  - 6.2.1 Heat Treatment of Glass Samples
    - 6.2.1.1 Equipment and Supplies
    - 6.2.1.2 Operating Procedures
    - 6.2.1.3 Calibration of Digital Thermometers and Thermocouples
  - 6.2.2 Preparation of Samples for Microscopic Examination
    - 6.2.2.1 Equipment and Supplies
    - 6.2.2.2 Operating Procedures
  - 6.2.3 Procedure for Operation of the Scanning Electron Microscope

7.0 Specimen Control /Traceability

8.0 Data Analysis
9.0 Record Keeping

DOCUMENT REPLACEMENT RECORD

Glass Characterization

Procedure	Descriptions	Rev #	Replaced in this Manual by:
VSL-GC-1.WVN	Melt Viscosity Determination	1	Section 6.1
VSL-GC-2.WVN	Heat Treatment of Glass Samples	NEW	Section 6.2.1
VSL-GC-3.WVN	Preparation of Sample for Microscopic Examination	NEW	Section 6.2.2
VSL-GC-4.WVN	Procedure for Operation of the Scanning Electron Microscope	NEW	Section 6.2.3

10/91

1.0 PURPOSE

This procedure describes methods, materials, equipment and special conditions required to perform heat treatment, microstructural characterization, and melt viscosity characterization of nuclear waste glass. This procedure provides the means for obtaining verifiable, reproducible, documented data from tests and experiments.

2.0 APPLICABILITY

This procedure applies to all employees trained and authorized to perform heat treatment, microstructural characterization, and melt viscosity characterization of nuclear waste glass. Specific activities covered by this procedure include: (a) specimen preparation for heat treatment; (b) selection of container for heat treatment; (c) temperature measurement and control, thermocouple calibration; (d) control of redox state; (e) establishment of time-temperature schedule for heat treatments; (f) preparation of specimens for optical microscopy; (g) preparation of specimens for SEM examinations; (h) optical microscopy and photomicrography; (i) SEM examination and associated analytical procedures, namely:

1) X-ray EDS characterization, semi-quantitative and quantitative analysis, and elemental mapping.
2) X-ray WDS characterization, semi-quantitative and quantitative analysis, and elemental mapping.
3) Imaging techniques and photomicrography.

4) Image enhancement and processing.

5) Phase identification isolation and quantification through image analysis.

(j) documentation work, logging of images, photomicrographs, and analytical results in laboratory notebooks; (k) viscometer spindle calibration; (l) rotating spindle viscometer operation; (m) viscometer muffle furnace and temperature controller operation; (n) viscometer spindle cleaning procedure; (o) viscosity data analysis software.

This procedure will be implemented by personnel from the VSL.

3.0 SAFETY

3.1 HAZARDS

The definition of a hazardous chemical is given in Section 8.3 of the CUA Chemical Materials Safety Manual, adopted from the OSHA Hazard Communication Standard. The CUA Chemical Materials Safety Manual is hereafter referred to as the CCMSM. This Standard and its application to CUA facilities are described in Sections 8.1 of the CCMSM, with the exceptions noted in Section 8.28. The types of radioactive material encountered during heat treatment and specimen preparation for microstructural characterization include liquid, solid, and fine particulate. Materials used for viscosity determinations are generally monolithic glass bars but will from time to time include fine particulate samples.

3.2 HAZARD MITIGATION

3.2.1 Identification of Hazards

The identification of radioactive hazards shall be facilitated through an education program including the Radiation Health Physics course referred to in Section 4.1 and other specific directives.

All materials received by personnel in the heat treatment and microstructural characterization program shall be properly labeled and identified, if radioactive, by approved yellow radioactive hazard labels. A geiger counter shall be used regularly to monitor levels of radiation in the work area and identify any sources of radiation.

Viscosity measurements involve the use of hot, molten radioactive glass and all appropriate precautions should be exercised. Heat resistent gloves and tongs shall be used for handling furnace covers, spindles, crucibles, etc. Eye protection shall be worn at all times. A face mask is recommended during removal of the crucible from the furnace due to the potential for shattering. Personnel must ensure that the above-furnace exhaust system is operating over the course of all measurements.

Cleaning of the viscometer spindle involves the use of hydrofluoric acid (HF) solutions and personnel shall familiarize themselves with the particular hazards associated with that material (see Section 5.0). Acid resistent gloves, face protection, and aprons must be worn during this procedure. Personnel shall ensure that HF antidote gel is available near the work area before commencing work with HF.

3.2.2 Handling and Storage of Chemicals

Examination of liquid materials (solutions and suspensions) is not part of the microstructural or viscometric characterization program and shall not be carried out in areas designated for heat treatment, preparation, and examination of specimens. The only place where radioactive liquids will be encountered is in the cutting and polishing operations performed on solid specimens. All such work shall be carried out in a sealed glove box connected to an exhaust line through a HEPA filter. All solid materials resulting from such work shall be washed thoroughly in clean solvents and detergent solutions and dried prior to removal from the glove box to insure that no radioactive particulates or liquids are removed from the glove box with the samples. All radioactive wastes and materials contaminated with radioactivity during specimen preparations shall remain in the glove box until they can be removed for disposal or decontaminated using approved procedures.

Solid materials handled in this work shall not produce levels of radioactivity which create a serious danger to the personnel handling them. All standards set forth in the radiation safety manual of CUA by the radiation safety officer shall be adhered to at all times by those handling radioactive materials of any type. Cutting, grinding, polishing or pulverizing of solid radioactive materials shall only be carried out in a glove box using approved procedures.

Examination of particulate radioactive materials shall only be done if levels of radioactivity are low enough to permit handling without special precautions or if the particulates can be embedded in mounting resins or otherwise immobilized to prevent dispersion of such

materials in the environment and their ingestion or inhalation by handling personnel. Such embedding and immobilization and any further preparation likely to produce additional radioactive liquids or particulates shall be done in the glove box using the procedures outlined above for solid materials. Viscometric measurements made on initially particulate samples requires loading of the crucibles in a glove box and closing the crucible before removal to the viscometer furnace. The crucible should remain lightly covered until the sample has become molten.

3.2.3 Emergencies

Any accident which appears likely to release radioactivity in such a form that it can be ingested or inhaled by personnel, contaminate their person or clothing, or be dispersed in the environment shall be reported to supervisory personnel immediately and dealt with using approved techniques. The release must be confined and all contaminated items removed for decontamination or disposal by approved methods.

3.3 PERSONNEL PROTECTION

Personnel protection shall be effected through education in and familiarization with the hazards of and proper methods of handling radioactive materials. Approved radiation film or TLD badges shall be worn by personnel at all times when they are in areas where exposure to radioactivity above background levels is likely to occur, and these badges shall be collected and

processed monthly. A geiger counter or other approved means of detecting and monitoring levels of radiation shall be available to confirm that levels of radiation in the workplace are within acceptable limits and check for possible contamination of objects and surfaces in areas where radioactive materials are handled.

4.0 REQUIREMENTS

4.1 TRAINING

All glass characterization laboratory personnel are trained in the understanding and use of the technical methods that they will use by the laboratory supervisor or by a trained and experienced person designated by the laboratory supervisor. Upon completion of training for a method, a technician is qualified to use that method independent of direct supervision.

5.0 REFERENCES

Safe Handling of Radioactive Materials, National Bureau of Standards Handbook 92, National Committee on Radiation Protection Report No. 30, U. S. Government Printing Office: Washington, D. C., 1964.

Basic Radiological Health, Course Manual, Health Physics Society, Baltimore-Washington Chapter, 1988, (or most recent edition).

Scanning Electron Microscopy and X-ray Microanalysis, Goldstein, et al., Plenum Press: New York, 1981.

The Electron Microscope Handbook, M. W. Ladd, Ladd Research Industries, Burlington, Vermont: 1973.

Scanning Electron Microscopy, A Student's Handbook, Michael T. Postek, Ladd Research

Industries, Burlington, Vermont: 1980.

Advanced Scanning Electron Microscopy and X-ray Microanalysis. Newbury, et al., Plenum Press: New York, 1986.

Scanning Electron Microscopy, X-ray Microanalysis, and Analytical Electron Microscopy, A Laboratory Workbook, Lyman et al., Plenum Press: New York, 1990.

Principles of Analytical Electron Microscopy, Joy et al., Plenum Press: New York, 1986.

Operating and Maintenance Instructions, 11-1180 Isomet Low Speed Saw, A. Buehler Co.: Lake Bluff, Ill., 1987.

Operating and Maintenance Instructions, 69-1000 Minimet Polisher Grinder, A. Buehler Co.: Lake Bluff, Ill. 1985.

TN5500/5600 System Operation Manuals, Tracor-Northern (Noran Instruments, Inc.): Middleton, WI, 1986 and updates.

JEOL JSM-35C Operator's Manual Japan Electron Optics Ltd.: Tokyo, Japan 1978 and updates.

Radiation Safety Manual of the Catholic University of America, January 1980, W. E. Keene RSO.

Brookfield Viscometer Operation Manual, Brookfield Engineering Laboratories Inc., Stoughton, Mass. 02072.

Improved Apparatus for Rapid Measurement of Viscosity of Glass at High Temperatures, R. L. Tiede, J. Am. Ceram. Soc., paper presented at 61st Ann. meet., May 20, 1959.

Physical Properties of Multicomponent Borosilicate Glasses: A Study of Viscosity, Processing and Durability, E. E. Saad, Ph. D. Dissertation, The Catholic University of America, 1988.

Occupational Health Guideline for Hydrogen Fluoride, U. S. Dept. of Labor, OSHA, Sept., 1978.

Hydrofluoric Acid Dermal Exposure, Vet. Hum. Toxicol. 31, 243 (1989)

Comparative Effectiveness of Topical Treatments for Hydrofluoric Acid Burns, W. M. Bracken et al. Journal of Occupational Medicine, 27, 733 (1985).

6.0 PROCEDURE

6.1 MELT VISCOSITY DETERMINATION

6.1.1 Equipment and Supplies

Qty	Device	Manufacturer	Model #	Calib. Req.
1	Viscometer	Brookfield	Synchralectic	I
1	Tube Furnace	Applied Test Systems		I
1	Controller	Love	Self-Tune Plus	N.A.
1	Spindle		Platinum	II
	Spindle extensions	Brookfield		N.A.
1	Multimeter	Keithley	177	III
1	Compensator	Omega		N.A.
1	Thermocouple	Chromel/Alumel type K		N.A.
1	Thermocouple	Pt/Pt-Rh type S		IV
4	Crucibles (#1,2,3,4)	Engelhard	Platinum	
	Crucibles	VWR	Alumina	
2	Thermometer	Fisher		
	Standard Viscosity Oil	Cannon	S2000	
	Standard Reference Material	NBS	SRM711	

Calibration codes: I. Calibration frequency: Every twenty uses/as necessary; Calibration accuracy ± 7% (see later in this procedure); II. Calibration is performed every twenty uses/as necessary using a standard oil of known viscosity (see later in this procedure); III. Calibration: Externally every two years. IV. Calibration: Every 40 uses/as necessary.

6.1.2 OPERATING PROCEDURE

A. Viscosity Measurement

(1) Calibrate the spindle using the procedure given in Section 6.1.3.2.

(2) Weigh out accurately 85-110g of the glass sample into a platinum crucible and place it in the furnace.

(3) Turn on the power and set the controller temperature to 1150°C unless specified otherwise by the Project Manager.

(4) After attaining the set temperature, allow the furnace temperature to stabilize (about 7-30 minutes).

(5) Immerse the calibrated spindle into the melt and attach the spindle hook to the viscometer. Ensure that the spindle is completely immersed in the melt and the spindle tip is about 1 cm above the bottom of the crucible.

(6) Insert the Pt/Pt-Rh thermocouple such that the tip of the thermocouple is at the top of the glass melt. Allow furnace temperature to stabilize.

(7) Turn on the viscometer and set it to the lowest rotation speed.

(8) Allow the system to attain equilibrium (at least 60 seconds), and record the reading on the viscometer and the rotation speed in RPM.

(9) Proceed to the next higher rotation speed of the viscometer and continue as in step (8) until either 50 RPM is reached or the viscometer reading is off scale.

(10) Record the temperature indicated by the Pt/Pt-Rh thermocouple.

(11) Set the viscometer RPM to the lowest value and set the furnace to the next temperature of interest. Ensure that the furnace temperature has stabilized as in step (4).

(12) Repeat steps (7) through (11) until all measurements on the sample are completed.

(13) Remove the Pt/Pt-Rh thermocouple from the crucible.

(14) At the end of the viscosity run continue as in Section C.

B. Cleaning of the Spindle and Platinum Crucible

(1) Place cool platinum crucible (with used glass inside) upside down in an alumina crucible.

(2) Place alumina crucible in the Del-Tech furnace and raise temperature to 1150°C for 20 minutes, to allow the glass to drip off the platinum crucible.

(3) Remove crucibles from furnace and let cool. Label alumina crucible.

(4) Don safety equipment and place the spindle and crucible in an HF bath for 48 hours.

(5) Dip the spindle and crucible into the neutralizing solution, rinse thoroughly, and allow to dry.

C. Finishing the Viscosity Run

(1) Turn the viscometer off and set the furnace temperature to approximately 1150°C.

(2) Raise the spindle above the surface of the melt to allow excess glass to drip off for about 20 minutes.

(3) Turn furnace off. Allow to cool.

(4) Remove platinum crucible and spindle from furnace.

(5) Proceed to clean the spindle and platinum crucible according to the procedure given in section B.

6.1.3 Calibrations

6.1.3.1 Calibration of the Viscometer

(1) Weigh out accurately 120 ± 5g of the standard SRM-711 glass into a quartz crucible and place it in the furnace.

(2) Proceed as in section A, steps (3) through (12).

(3) Calculate the measure viscosity as in section 6.1.4 below for each temperature of the standard materials studied.

(4) Calculate the percentage error for each of the measured viscosity readings as compared to the nominal values.

(5) Examine the results and report deviation from the required accuracy of ± 7% to the Project Manager.

(6) Report the results in the viscosity calculation file.

6.1.3.2 Calibration of the Spindle

(1) Place the standard oil (Cannon Instrument Company S2000 viscosity oil) in a platinum crucible.

(2) Insert the spindle in the oil as described in step (5) of section A.

(3) Turn on the viscometer and record the viscometer readings at the various rotation speeds as in section A from step (7) to (9).

(4) Observe if there exists any eccentricity of the spindle and if necessary replace it.

(5) Measure the oil temperature using a partial immersion thermometer and note it down.

6.1.4 Sample Control/Traceability

(1) All persons submitting samples to the viscometry/conductivity laboratory sign in their sample in the viscometry sample logbook.

(2) If sample is not used immediately, it is stored in the viscosity/conductivity lab. If sample is radioactive, it is stored behind lead shielding.

(3) Used samples (contained in their alumina crucibles) remain the viscosity/conductivity lab until retrieved by the persons submitting these samples. Radioactive samples are stored behind lead shielding.

6.1.5 Computerized Data Analysis

(1) Calculate the value of the constant K_1 using the nominal value of the viscosity of the standard oil and record it in the viscosity calculation file.

(2) From the results of the calibration of the spindle perform a least squares fit on the equation:

$$\tau + n K_1\omega + K_2 = 0$$

where τ is the viscometer reading,
K_1 and K_2 are instrument constants

n = shear viscosity of material under investigation

ω = rotation speed

and calculate the value of K_1.

(3) From the viscosity measurements, using the value of K_1 derived from the spindle calibration, determine values of n and K_2 from the above equation by performing a least squares fit on the data at each temperature.

(4) Using the data obtained in Step 3, perform a 3 - parameter least squares fit of the equation.

$$\text{Log } n = \frac{A}{T-T_0} + B$$

Where A, B and T_0 are fitting parameters.

(5) Record all the raw and analyzed data in the viscosity calibration file.

Procedure for Running the Viscosity Data Reduction Programs

Procedure

Note: <CR> indicates the "enter" key on the keyboard.

(1) Turn the computer, monitor, and printer on.

(2) Type C:<CR>.

(3) CD\QBASIC <CR>.

(4) Type VISCO <CR>.

(5) Answer all the prompts and input the data as requested.

(6) Repeat the calculation with different values of To, varying To in steps of 10°, until the variance is a minimum.

(7) On answering no to the prompt of whether to perform another calculation, a printout of the latest set of data will be obtained and the program will be exited.

(8) Turn off the computer.

Equipment List				
Qty	Device	Manufacturer	Model	Calib. Req.
1	Computer	IBM or any Compatible	Any IBM compatib le	NA
1	Monitor	Any compatible Systems	Any compatib le equivale	NA
1	Keyboard	Compatible	NA	NA
1	Printer	Epson or HP Laser	NA	NA
1	Visco Software Package			

6.1.6 Record Keeping

(1) Viscometry data is recorded by hand in the appropriate notebook. Notebooks currently in use are:

Fernald Viscosity & Conductivity
Viscosity & Conductivity - Glass Simulation
Calibration/Testing
West Valley: Viscosity
Argonne

(2) Results of the computerized analyses are posted on the v/c lab door for collection by persons retrieving used samples. A notebook containing all results is stored in or near the v/c lab. Results are also stored by sample name in the v/c lab computer.

6.2 Microstructural Characterization of Glasses

6.2.1 Heat Treatment of Glass Samples

6.2.1.1 Equipment and Supplies

Qty	Device	Manufacturer	Model	Calib. Req.
1	Furnace	Lindberg	51848	NA
1	Annealing	Neytech	85M	NA
	Thermocouples		Type K	I
1	Digital Thermometer	Fluke	52	I
	Clay Combustion Crucibles	Leco		NA
	95% Platinum/5% Gold Crucible			NA
1	Crucible tongs			NA

Notes: I. Calibration to be carried out every six months or on every replacement with a new thermocouple. Calibration Accuracy: ± 10°C.

6.2.1.2 Procedure

Note: If the sample is radioactive steps 1-4 are to be carried out in the left hand glove box in Room 38

1. Place the glass sample in a plastic bag.

2. Break the glass into pieces small enough to enter the crucible by shattering the sample with a hammer.

3. If the sample comes in a crucible, remove pieces of the shattered crucible before continuing.

4. Transfer the glass pieces into the crucible by hand using a double pair of gloves.

5. Turn on the Lindberg Furnace.

6. Insert the thermocouple into the furnace through the hole in the door.

7. Set the controller on the front of the furnace to reach a temperature of 1100°C.

8. Wait for about 15 minutes for the temperature to reach 1100°C and stabilize.

9. Remove the thermocouple from the door of the furnace and open the door.

10. Place the crucible containing the glass sample into the oven, locate it in the proximity of the inserted thermocouple and close the door.

11. Replace the thermocouple in the furnace through the hole in the door.

12. Press the RECORD Button on the digital thermometer.

13. Wait for the required amount of time while the glass is remelted at 1100°C (Minimum 1 hour).

14. Press the VIEW button on the digital thermometer to check that the maximum and minimum temperatures fell in the range of 1125 to 1075°C. If not, consult the Project Manager.

15. Adjust the Lindberg Furnace controller to achieve the required temperature for heat treatment (this is generally in the range of 600 to 1000°C).

16. When the required temperature for heat treatment is reached record the time in the appropriate laboratory notebook.

17. Press the RECORD button on the digital thermometer.

18. Let the crucible remain in the furnace for the required time as determined by the Project Manager.

19. When the heat treatment is complete press the VIEW button on the digital thermometer to ascertain that the maximum and minimum temperatures did not vary by more than ± 10°C from the required temperature for heat treatment.

20. Consult the Project Manager if deviations are more than 10°C in the above step.

21. Ensure that the temperature of the annealing furnace is maintained between 460 and 560°C.

22. Remove the thermocouple from Lindberg Furnace.

23. Open the door of the furnace and remove the crucible using crucible tongs.

24. Transfer the crucible to the annealing furnace and securely latch the door of the annealing furnace.

25. Let the crucible containing the sample remain in the annealing furnace for a minimum period of 1 hour.

26. Remove the crucible from the annealing furnace using crucible tongs and allow the glass sample in the crucible to cool to room temperature.

6.2.1.3 CALIBRATION OF DIGITAL THERMOMETERS AND THERMOCOUPLES

Note: The Gold Furnace, controller and associated thermocouple, the Keithley 177 calibrated Microvoltmeter, and NIST calibrated Type S Measuring Thermocouple are needed for this procedure. During the calibration procedure, 3 thermocouples will be inside the Gold Furnace at the same time. These are the control thermocouple (connected to furnace controller), the NIST thermocouple and the test thermocouple (thermocouple being calibrated).

1. Insert the control and NIST thermocouples in the furnace to immersion depths where the cross-section of the furnace possesses a uniform axial temperature profile.

2. Immerse reference junction of NIST thermocouple in ice/water bath. Be sure that unmelted ice is always present in contact with the reference junction during the entire calibration procedure.

3. Insert the test thermocouple into the same end of the furnace as the NIST thermocouple. It should be parallel to the NIST thermocouple and inserted to the same depth.

4. Connect the NIST thermocouple to the microvoltmeter.

5. Connect the test thermocouple to the digital thermometer or controlling device it is being calibrated with. The two will always be calibrated as a unit. If the thermometer is a multi-channel unit, it is best to connect the test thermocouple to the channel it will be used with.

6. If a thermocouple is being calibrated on its own, connect it to the same microvoltmeter

as the NIST thermocouple. Alternate between the two when taking readings. Place a thermometer at the voltmeter terminals and record the ambient temperature with each voltmeter reading. Use this to correct for room temperature error with the aid of standard tables.

7. Set the furnace temperature to the desired value and turn on the power.

8. Wait about 10 minutes until the temperature equilibrates.

9. Take 3 readings each from the test and NIST thermocouples at 5 minute intervals.

10. If more than one thermocouple is to be tested place the next thermocouple to be tested in the furnace, allow the temperature to equilibrate and repeat step 8.

11. Set the furnace to the next desired temperature and proceed with steps 7 through 9.

12. Repeat the calibration for a total of 4 temperatures that include the temperature range required.

13. At each temperature setting compare the temperatures corresponding to the readouts from the reference thermocouples and test use the calibration table for the NIST thermocouple to convert its microvoltmeter readings into temperatures. Use standard tables (e.g. in Omega temperature handbook) if necessary, to convert test thermocouple readings to temperatures (i.e. if the test thermocouple is not being calibrated with a digital thermometer as a unit. If the two temperature measurements deviate by more than 10°C consult the Project Manager.

6.2.2 Preparation of Samples for Microscopic Examination

6.2.2.1 Equipment and Supplies

Qty	Device	Manufacturer	Model	Calib. Req.
1	Saw	Buehler	11-1180 Isomet	NA
1	Polisher	Buehler	69-1000 Minimet	NA
1	Evaporator	VSL		

Thermoplastic cement,
hot plate, sample mounting
Fixtures for saw, 1" dia.
aluminum or brass polishing
stubs

Lubricants:

Dia-cut
Kerosene or isocut fluid, or Lapping oil on Nylon; use only lapping oil on texmet
De-ionized water

Grinding/Polishing Media:

30μm Grid-abrade
12μm Grid-abrade
6μm Grid-abrade
15μm diamond paste on Texmet or preferably nylon (perforated texmet may better in some cases)
6μm diamond pasted paste on Texmet
1μm diamond paste on Texmet
0.05μm gamma alumina on microcloth

Cleaning supplies:

Ultrasonic cleaner, solution of Mr. Clean, tap water, deionized water, Methanol, acetone, tissue wipers.

Sample coating supplies:

Carbon electrodes, conductive paint.

6.2.2.2 Procedure

A. CUTTING AND POLISHING

Note: All cutting and polishing of radioactive samples must be performed in the two interconnected glove boxes located in Room 38.

1. If the sample is in a LECO clay crucible

(a) Cement the crucible containing the glass sample using thermoplastic cement to the

glass plate side of the sample holder.

(b) Attach the mounted sample to the sample holding arm of the Buehler Isomet Saw.

(c) Adjust the weights on the sample holding arm to produce moderate pressure of the sample against the saw blade.

(d) Position the sample over the blade of the saw so that the cut will be made in the region of the sample from which the slice is to be taken.

(e) Turn the power on and adjust the speed of rotation of the saw blade to produce the desired rate of cut.

(f) Ensure that there is sufficient quantity of Dia-cut lubricant for the blade in the reservoir.

(g) Gently lower the arm of the saw by hand until sample contacts the rotating blade.

(h) Cut through the entire sample but do not allow the blade to pass through the glass plate to which it is cemented.

(i) Lift the arm of the saw and repeat the cutting process after repositioning the sample for the desired thickness (2 or 3 turns of the micrometer screw).

(j) Remove the slice and free it of all fragments of clay.

(k) Proceed to Step 3.

2. If the sample is in a 95% Platinum - 5% gold crucible--

(a) Turn the crucible upside down and tap it gently so that the sample drops out of the crucible.

(b) Cement the sample using thermoplastic cement to the glass plate side of the sample holder.

(c) Proceed as in steps 1 (b) through 1 (j).

3. Wash the slice and remainder of the sample together with the sample holder in clean water and wipe dry to remove any fine particles before taking out of the glove box.

4. Remove the remainder of the sample from the mounting plate by placing it on a hotplate to melt the thermoplastic cement.

5. Store the remainder of the sample in an appropriately marked bag.

6. Mount the glass slices on a 1" diameter aluminum or brass polishing stub using thermoplastic cement.

7. Polish the glass slices using the Buehler Minimet Polisher.

8. Samples may also be embedded in epoxy or other resin using 1" or 1 and 1/4" O.D. molds. Mix the resin according to directions, and coat the mold with a light coating of petroleum jelly or mold release agent. After curing and before polishing on the Minimet a 3/16" hole must be drilled at dead center in the rear face of the embedded sample (use lathe in shop) to within 1/4"-3/8" of front face.

Note: Each step of the polishing process should be carried on as long as required to remove the scratches from previous step. A typical polishing procedure is given below:

(a) Grind the glass sample on a 30μm diamond Grid-abrade using water as the lubricant. Set the polisher to a speed setting of 6 and time setting of 5 and apply maximum pressure. Continue this process until the surface of the sample shows full contact with the grid surface.

(b) Clean the glass sample in an ultrasonic cleaner first using a solution of Mr. Clean and water for 30 seconds to 1 minute and then using water alone.

(c) Repeat step 7 (a) using a 12μm Grid-abrade, half pressure, speed setting of 5 and time setting of 5. Repeat 2-4 times until scratches from the previous step are removed.

(d) Carry out the cleaning process as in step 7 (b).

(e) Repeat the grinding/polishing process in step 7 (a) using a 6μm Grid-abrade, half pressure, a speed setting of 5 and a time setting of 5. Repeat 1-2 times to remove any scratches.

(f) Clean the glass sample as in step 7 (b).

(g) In the following steps, when kerosene oil or isocut are called for, use only enough to produce a small ring of fluid at the perimeter of the polishing pattern.

(h) Polish the sample using 15μm diamond paste on Nylon with Lapping oil as the lubricant. Do not use kerosene or Isocut on Texmet. It may be used on Nylon. Apply full pressure, use a speed setting of 5-9, and a time setting of 5. Repeat as necessary until scratches from the previous step are removed.

(i) Clean the sample with methanol or acetone using tissue wipers, and then in the ultrasonic cleaner using Mr. Clean and water or Ultramet solution. Again rinse with tap water in the ultrasonic cleaner before going to the next step.

(j) Repeat the polishing process in step 7 (h) using 6μm diamond paste on nylon with Lapping oil as the lubricant. Apply full pressure, speed 5 and a time setting of 9. Repeat till scratches from the previous step are removed.

(k) Clean as in step 7 (i).

(l) Repeat the polishing process in step 7 (j) using 1 μm diamond paste on Texmet with lapping oil as the lubricant. Apply full pressure, speed setting of 5 and a time setting of 9. Repeat till scratches from the previous step are removed.

(m) Repeat the cleaning process given in step 7 (i).

(n) Repeat the polishing process in step 7 (j) using 0.05μm gamma alumina on microcloth with deionized water a lubricant. Use a speed setting of 5 and a time setting of 4. Repeat till scratches from the previous step are removed.

(o) Repeat the cleaning process given in step 7 (i).

(p) Rinse the sample finally with tap water in the ultrasonic cleaner and wipe dry before removing the sample from the glove box.

B. <u>COATING WITH CARBON</u>

Note: I: If the evaporator system is in the shut down condition open the supply and return cooling water valves.

II: Specimens should be prepared for coating by painting the edge of the specimen and any remaining thermal cement with conductive paint so that a continuous conduction path will exist between the sample surface to be observed and the mounting stub.

1. Close the vent on the belljar.

2. Close the roughing valve.

3. Close the high vacuum valve.

4. Open the foreline valve.

5. Close the mechanical pump vent.

6. Start the mechanical pump.

7. Switch on the thermocouple gauge and note the foreline pressure.

8. Wait for the foreline pressure to reach 100 millitorr or less and then switch on the

diffusion pump.

9. Wait for 15 minutes.

10. Switch on the high vacuum gauge and verify that the pressure is in 10^{-5} torr range.

11. Vent the belljar by opening the belljar vent valve.

12. Cautiously unseat the belljar from the base plate and lift it clear of the work area.

13. Loosen the spring-loaded electrode holder and swing it aside.

14. Insert a 1/8th inch flat-ended carbon electrode in a stationary electrode holder and tighten.

15. Insert a 1/8th inch carbon electrode with a sharpened point in the spring-loaded electrode holder and swing the holder back into its operating position adjusting the location of the sharpened carbon to meet with the flat surface of the opposite carbon electrode.

16. When proper positioning has been achieved tighten the sharpened carbon in its holder and tighten the holder.

17. Release the restraint on the spring-loaded electrode holder allowing the carbons to come into contact.

18. Place the samples to be coated directly under the point of contact.

19. Place the polished brass plate adjacent to specimens. This is to be used as an estimator for the coating thickness.

20. Lower the belljar and make sure it is firmly sealed against the base plate by applying downward pressure by hand from the top.

21. Close the belljar vent.

22. Close the foreline valve.

23. Switch on the thermocouple gauge to monitor belljar pressure.

24. Open the roughing valve.

25. Wait for pressure in the belljar to drop to 10 millitorr or less.

26. Close the roughing valve.

27. Open the foreline valve.

28. Switch the thermocouple gauge to read foreline pressure.

29. Open the high vacuum valve slowly (Do not allow the foreline pressure to rise above 50 millitorr).

30. At the same time monitor the high vacuum gauge and try to keep the pressure below 10^{-3} torr by controlling the rate of opening of the high vacuum valve.

31. When the high vacuum valve is fully opened wait at least one minute until the pressure on the high vacuum gauge reads well below 10^{-4} torr.

32. Ensure that the current control knob top of the evacuator is fully counter clockwise.

33. Turn on the Filament Transformer Switch on the lower panel of the vacuum system and advance the current control until a dull red glow is visible at the contact point of the carbons.

34. Allow the system to outgas at this current setting for about 1 minute.

35. Advance the current control knob while monitoring the system current on the top panel meter until the current reaches about 30 amps. (Avoid looking directly at the point of contact between carbons. Some slight sparking is normal when sufficient evaporating current has been reached.)

36. Evaporate for 15 to 30 seconds until reflection on the polished brass plate dims slightly.

37. Turn the current control fully counter clockwise and wait for a minute for the system to cool slightly.

38. Switch off the Filament Transformer.

39. Close the high vacuum valve and vent the belljar.

40. Remove specimens, replace belljar and evacuate the system as in steps 20-31.

<u>To Leave the System in Operating Condition Ensure that:</u>

(a) Belljar vent and roughing valve are closed.

(b) High vacuum valve is open.

(c) Foreline valve is open.

To Shut down the System:

(a) Switch off the diffusion pump

(b) Wait for 15 minutes

(c) Close the high vacuum valve

(d) Close the foreline valve

(e) Turn off the supply and return cooling water

(f) Turn off the mechanical pump

(g) Open the mechanical pump vent

(h) Switch off all gauges

6.2.3 Procedure for Operation of the Scanning Electron Microscope

Manufacturer: JEOL
Model: JSM-35(C)

X-RAY ANALYZER AND IMAGE ANALYSIS SYSTEM

Manufacturer: Tracor Northern (TN)
Model: TN5500

A. OPERATION PROCEDURE FOR SEM

Note: The main power key switch for the SEM is always left ON. When the instrument is not in use the white switch at the lower right on the front panel of the instrument is left in the "unattended operation" position.

1. Press the white toggle switch down from the "unattended operation" position to the normal position.

2. Mount the specimen in the appropriate stage and thread the stage onto the specimen exchange rod.

3. Withdraw the rod fully into the specimen exchange cap until it locks in place.

4. Introduce the mounted specimen into the SEM through the airlock as follows:

   (a) Go to standby setting as below:

      (i) Ensure SEI-BEI switch is in the middle position, and no lights on SEI unit are ON

      (ii) Ensure that Gun Filament knob is turned all the way counter-clockwise

      (iii) Ensure that HV is shut off

   (b) Put the specimen exchange cap on the airlock chamber.

   (c) Push the red button next to the airlock chamber.

   (d) Wait until the light in the button goes OFF.

   (e) Set the specimen stage control knobs to the following positions: (Tilt: 0 degrees, x: 7.5, Y: 12.5, Rotate: 000)

(f) Open the sliding door all the way.

(g) Push the specimen into the specimen chamber until the stage seats fully on the tapered mounting post.

(h) Unscrew the rod, and withdraw it to the locked position.

(i) Close the sliding door.

(j) Push the red button, remove the airlock chamber specimen exchange cap and store on its holder.

(k) Cover the airlock with the protective dust cover.

5. Select the working distance--15mm for high resolution work and 39mm for routine work and x-ray analysis.

6. Turn on the high voltage switch.

7. Select the KV required (Normally 25 KV is selected for most routine and x-ray work).

8. Turn SEI-BEI switch to SEI. Two red lights on the SEI unit come on.

9. Set the condenser lens knob according to the KV as below: (guidelines only--readjustment may be required)

KV	Lens Position
30 KV or higher	2:00
20 KV - 29 KV	1:00
10 KV - 19 KV	12:00
1 KV - 9 KV	10:00

10. Advance the brightness and contrast knobs on the display monitor to at least half-scale.

11. Switch magnification to minimum (10 or 20).

12. Push in "Rapid 2" and select "Line Profile" by turning the switch (□,•,-) to ("_____").

Note: If you do not see the line on the screen adjust the "Brightness" below the screen and then "Brightness" on SEI

13. Increase Gun Filament control until the filament is saturated. Watch the movement of "Line Profile".

    Note: i) If the movement of line profile is too little, increase the "contrast" on the SEI unit.

    ii) The lifetime of a filament will be shortened if the Gun Filament knob is turned beyond the saturation point.

14. Adjust "Gun Bias" until "Load Current" is around 100μA. Readjust the filament saturation. When 10KV or lower is used, use the maximum load current which is less than 100μA.

15. Adjust the two upper "Beam Alignment" knobs and bring the signal line upwards on the monitor as much as possible. (Gun tilt alignment).

16. Adjust the "Medium" objective lens knob until the "Line Profile" has sharp peaks. (Focusing the image).

17. Adjust the "Brightness" and "Contrast" knobs on the SEI unit until the magnitude of the line Profile is about 1½ inch and the bottom of the line Profile is about the middle of the monitor screen.

18. Turn the switch (□,•,-) to "□" (picture). An acceptable image should be observed on the monitor. If there is no image or the contrast of the image is too low, adjust the CONTRAST on the display monitor.

19. Go to 20x magnification at 15mm working distance (or 10x at 39mm.) Check the position of the oval shaped image on the monitor screen. Adjust the two lower "Beam Alignment" knobs until this oval image is approximately at the center of the screen. Readjust the two upper "Beam Alignment" knobs for the maximum brightness.

    Note: This step is usually necessary only after changing a filament.

20. An acceptable image should be observed on the monitor. In order to lessen the noise level at "Rapid 2", turn the condenser lens knob 1-2 settings counter-clockwise. In order to obtain a sharper image at a magnification higher than 10000x, turn the condenser lens knob 1-2 settings clockwise.

21. Examine the image on the monitor and identify features of interest.

B. <u>PROCEDURE FOR OBTAINING A PHOTOGRAPH ON SEM</u>

1. Select the area to be photographed.

2. Focus the image carefully by going to higher magnification and using the "Rapid 1" (10 times higher magnification for low magnification 2-3 time higher magnification for high magnification. For magnification above 20000x focus should be done at the magnification in use.

3. Return to the desired magnification for photographing.

4. Push in the "Wave Form Monitor" and "Slow 1" buttons. If nothing appears on the screen, adjust "Brightness" knob below the screen.

5. Adjust the "Brightness" and "Contrast" knobs on the SEI unit. Set the wave form between the top line (white) and the bottom line (black) for the maximum contrast. If the soft contrast is preferred, set the signal between the top line and the second line from the bottom (grey).

6. Push in the "Normal" button in order to return to the image.

7. Insert film in the camera.

8. Push "Photo" and wait for light in "Photo" button to go off.

9. Process the film.

C. STIGMATOR ADJUSTMENT FOR MAGNIFICATION ABOVE 2000x ON SEM

1. Rock the fine focus knob back and forth between under and over focus conditions. Observe that the flow (or striation) of the image will be in the directions at right angles to each other as one goes from under to over focus.

2. Adjust the focusing just to the focus where the flow cannot be seen. This focus is somewhere midway between under and over focus.

3. Increase the "Magnitude" knob of the stigmator by half a turn, then adjust the "orientation" knob until the image becomes sharper.

4. Adjust the "Magnitude" and the "Orientation" controls in order to make the image sharper and repeat this procedure until no improvement in image quality is apparent. At this point going to under or over focus should produce only an uniform smearing of the image rather than perpendicular directions of flow.

5. Adjust the "Fine" objective lens knob for the sharpest image.

D. TO APPLY CORRECTION FACTOR FOR MAGNIFICATION WHEN THE SPECIMEN SURFACE IS NOT FLAT

Note: The working distance remains constant while any of the specimen stage movements are made (x and y translation, tilting and rotation), for a specimen with a relatively flat surface. Therefore, the magnification is always calibrated. In cases when a specimen has no flat surface proceed as follows:

1. In the case that a specimen has a roughness up to about 3mm, adjust the fine-z on the specimen stage such that the area of interest ia at the same level as the top of the specimen holder which is the calibrated level.

2. In cases when the area of interest on a specimen is either much higher or lower than the calibrated level, (more than 3mm roughness), apply a correction factor to the magnification as below:

   a) Measure the vertical distance between the area of interest on a specimen and the top level of the specimen holder which is the calibrated level

   b) Read the correction factor from Figure 2 of section SEMINST-5 of the JSM-35C Scanning Microscope Operator's manual

E. PROCEDURE FOR X-RAY ANALYZER AND IMAGE ANALYSIS SYSTEM (TN)

Note: Normally the TN computer is left ON at all times. When not in use, the SYQUEST cartridges are removed, and the Monitor and Video Copy Processor (VCP) are left OFF. (The rear panel switch of the VCP is left on at all times).

(i) To Start the TN System:

1. Insert Master Cartridge in Drive 1, close the door, wait until the light on the front panel turns from red to green.

2. Turn on the Monitor.

3. Turn on the front panel power switch of the VCP.

4. Ensure that the VCP is configured for analog RGB operation, Frame Mode, and Monitor Mode.

5. If data is to be stored insert appropriate disks in Drives 2, 3, and/or 4.

6. If the TN system does not come ON, carry out the following steps:

a) Ensure that the Printer in ON LINE

b) Press the RESET Switch

c) If still no response is obtained, turn the main power switch off, wait for 15 seconds, and turn it on again

d) If still no response is obtained, contact the Project Manager

(ii) X-ray Analysis:

1. Ensure that the specimen is at a working distance of 39mm.

2. Insert the x-ray detector (EDS) to the position marked 45.7mm.

3. Center the object of interest in the field of view on the SEM unit.

4. Set up Pulse Processing as below:

a) Press the SET UP on the Soft-pad.

b) Use the Omni control knob to select the desired program.

c) Press the "Enter Dialogue" soft key.

d) If the spectrum is to be obtained in the half memory for a voltage range of 0-10 Kev, select 2048 for the number of channels. If the spectrum is to be obtained for a voltage range of 0 to 20 Kev select 4096 channels.

e) Press the "RETURN" key.

f) Select the amplifier count rate: for maximum resolution use "LOW," for minimum acquisition times use "MED," or "HIGH."

g) Press RETURN.

h) When "Set up Complete" appears on the screen, press the "RUN" button on the soft-pad.

5. Set up the Pulse Height Analyzer (PHA) as below:

a) On the TN press the ACQUIRE button on soft-pad.

b) Select Program 1 (Display PHA status).

c) Press the RUN key on the soft-pad.

d) Check the deadtime displayed and adjust the condenser lens current on the SEM until deadtime reads about 30%.

e) Press the EXIT soft key.

f) Refocus the image if necessary.

6. Acquire an x-ray spectrum as below:

a) Position the beam on the object of interest (SEM).

Note: If the object of interest is smaller than about 5μm in diameter or thickness, the spectrum collected will not be exclusively from the object of interest, but will include some of the adjoining matrix as well. Operator's discretion is required in interpreting such a spectrum.

b) Press the ACQUIRE key on the soft-pad.

c) Enter the parameters for spectrum acquisition.

d) When "Set up complete" appears on screen, press the RUN key on the soft-pad.

e) Note that spectrum acquisition will begin. Accumulated spectral data will be displayed and updated during acquisition.

f) To halt the acquisition prematurely press the STOP key on the soft-pad.

g) Note that acquisition will terminate automatically when the condition set in step 6 (c) is satisfied.

h) Identify peaks by pressing the MARKERS soft-key and the Z-SELECT soft key. Use omni control on keyboard to scan the periodic table.

7. To print the spectrum on C.ITOH printer carry out the following steps:

a) Press the OUTPUT key on the soft-pad.

b) Select the PLOT SPECTRUM program.

c) Select plot size (one half page is usual).

d) Press RETURN. "SET UP COMPLETE" should appear.

e) Set paper on printer at top of the page.

f) Press the RUN button on the soft-pad. A spectrum will be printed out on the printer.

8. For microanalysis carry out the following steps:

a) Select the area to be analyzed.

b) Collect the spectrum in the first half of memory.

c) Load the SQ program.

d) Identify elements present.

e) Set up definitions.

f) Select elements to be analyzed.

g) Input the conditions of analysis. (Refer to the Tracor-Northern Operating Manual).

h) Type the command "QUANTIFY" followed by RETURN.

i) Results of analysis will be printed on the C.ITOH printer when complete.

iii) <u>IMAGE ANALYSIS:</u>

<u>To acquire a Video Image on the TN System:</u>

1. Press the upper sector of the "ENABLE" rocker switch on the trackball box.

2. Load the VISTA program.

3. Use the following soft-key sequence:

- Acquire
- Video
- Image 1 (or 2) as desired
- Select Resolution (128, 256, 512)

The image will now be acquired and displayed.

To determine an AREA Fraction

1. Display the image to be analyzed.

2. Use the soft key sequence "Process," "Gray," "Segment."

3. Attach the cursor to one extreme of the video level of the feature or phase of interest.

4. As the cursor is moved, video levels on the image between the cursor and the "attach" point will be colored in. Continue until the entire feature or phase is just colored in.

5. Read the percent of the image colored in directly off the display.

TO ACQUIRE X-RAY MAPS:

1. Use the soft-key sequence "SETUP," X-RAY."

2. Input the parameters for x-ray map acquisition.

3. Redefine any regions of interest that may result in ambiguous results.

4. Acquire maps using the soft-key sequence: "Acquire," "Maps (x-ray)," "64" (or "128" for higher resolution.)

5. Maps will be displayed as acquired, one line at a time.

F. SHUT DOWN PROCEDURE
For SEM unit

1. Set the SEI detector to OFF position.

2. Set the magnification knob to maximum.

3. Set the Scan Generator knob to Slow 2.

4. Set the CONTRAST and BRIGHTNESS knobs on the display monitor to minimum.

5. Turn the Gun Filament knob fully counter-clockwise.

6. Switch off the Accelerating voltage.

7. Switch the SEM unit to "unattended operation" by pushing the white button up.

For the TN system

1. Press the "Drive 1" button, wait until the flashing red light on the unit goes out.

2. Remove disk.

3. If a disk is present in Drive 2, repeat steps 1 and 2 above for it.

4. Remove floppy disks (if any) from drives 3 and 4.

5. Turn off the monitor.

6. Turn off the Video Copy Processor at the front panel switch.

7. Leave the computer ON.

SECTION 7.0

SPECIMEN CONTROL/TRACEABILITY

Specimens for glass characterization are obtained from the Glass Preparation Laboratory. Samples are recorded in WVCM, UTh or Misc Radioactive glass logs while leaving the Glass Preparation Laboratory. The recipient of the glass dates and signs the log and records the receipt in Log in the Electron Microscopy Laboratory. Samples prepared for SEM observation are stored in the SEM lab after observations are completed

SECTION 8.0

DATA ANALYSIS

Microstructural characterization studies consist of observing the crystal phases and carrying out the semi-quantitative analysis by Energy Dispersive Spectrometry. Output from this study consist of SEM micrographs of the crystal phases and spectra of the bulk glass and the phases. The observations made of the phases along with supportive micrographs and printed spectra

entered in the laboratory notebook maintained by the Project Manager. Data Analysis consist mainly of identifying and quantifying the crystal phases and confirming the identification with the EDS spectra. Technical literature, and textbooks in mineral chemistry are used for the identification of the crystalline phases.

SECTION 9.0

RECORD KEEPING

Details of heat treatment and sample preparation for Scanning Electron Microscope are recorded in the laboratory notebook "Heat Treatment and SEM Sample Preparation". Glass microstructural data and observations are recorded in a separate laboratory notebook. Formats for recording the crystalline phases observed are included in the Appendix at the end of this section.

ATTACHMENT 9

MOSSBAUER SPECTROSCOPY

(DURATEK TO PROVIDE)

ATTACHMENT 10

MELT CONDUCTIVITY

Title: MELT CONDUCTIVITY DETERMINATION

Document: VSL-7.1-ANL

Issued: 11/90

Revisions

Rev. #	Date
NEW	11/90

Prepared by:

Robert K. Mohr
Project Manager

Approved by:

Pedro B. Macedo
Co-Director, VSL

Richard Sasson
Quality Assurance
Officer, VSL

MELT CONDUCTIVITY DETERMINATION

Equipment and Supplies

Qty	Device	Manufacturer	Model	# Cal.Rec
1	Controller	Love	49	N.A
1	Tube Furnace	VSL		I
1	Split Furnace	ATS Inc.	3320	I
1	Controller	Eurotherm	818P	N.A.
1	Multimeter	Keithly	177	II
1	Compensator	Omega		I
1	Thermocouple		Chromel/ Alumel type K	III
2	Thermocouple		Pt/Pt-Rh type S	I
	Thermocouple Protection tubes			N.A
	Crucible	U.S Quartz		
	Crucible	Engelhard	Platinum	N.A.
1	Thermometer	Fisher		
	Standard Ref. Mat.	NBS	SRM711	
1	Conductivity Probe	VSL	Pt	I
1	Impedance analyzer	Hewlett Packard	4194A	I

I. Calibration frequency: Every six months or sooner if required
Calibration accuracy +_ 7% (see later in this procedure)

II. Calibration: externally every two years

III. Replace after every third run in order to minimize oxidation.

PROCEDURE

A. Conductivity Measurement

(1) Perform instrument compensation using shorted and open terminals.

(2) Measure a precision resistor in the range of the glass resistance, the value to be within 1% of the quoted value.

(3) Perform instrument compensation using shorted and open probe.

(4) Weigh out enough glass to make up ~ 85 ml of melt (based on the density)

(5) Melt the sample at the upper temperature specified by the Project Manager

(6) Lower the probe electrodes into the melt (the electrode immersion depth is ~0.75 cm)

(7) Measure the resistance of the melt at a frequency of 100 Hz

(8) Lower the temperature and repeat step (7) at ~50°C intervals over the temperature range specified by the Project Manager

(9) Raise the temperature and repeat step (7) at ~100°C intervals over the measurement range

(10) Calculate the melt resistivity using the measured resistance and cell constant.

(11) Fit the data to a Fulcher equation. All data points should be within 20°C of the corresponding resistivity data point obtained from the Fulcher fit.

B. Cleaning of the Probe and Platinum Crucible

(1) Raise the probe above the melt and let the excess glass drip into the crucible

(2) Place the probe in a sealed can to cool to room temperature

(3) After the probe has cooled, place it in an HF bath to remove the remaining glass

(4) After the glass has been removed dip the probe in neutralizing solution, rinse it with deionized water and allow to dry

(5) Allow the furnace to cool to room temperature

(6) Remove the crucible and place it in a furnace at up to 1500°C

(7) After the glass temperature has stabilized pour out the glass into a clay crucible for disposal

(8) Place the platinum crucible in a sealed container to cool

(9) After the platinum crucible has reached room temperature place it in an HF bath to remove the remaining glass

(10) After the glass has been removed dip the crucible in neutralizing solution, rinse it with deionized water and allow it to dry

C. Calibration of the Conductivity Measurement System

(1) Perform instrument compensation using shorted and open terminals.

(2) Measure a precision resistor in the range of the glass resistance, the value to be within 1% of the quoted value.

(3) Perform instrument compensation using shorted and open probe.

(4) Measure the complex impedance of NaCl solutions of .01, .1 and .5 normality at 100, 200, 400 1000, 2000, 10,000, 40,000, and 100,000 Hz.

(5) Measure the temperature of the solutions using a thermometer.

(6) The probe immersion depth shall be 0.75 cm.

(7) Plot the real versus the imaginary impedance at each frequency and extrapolate to infinite frequency to obtain $R(\infty)$.

(8) Calculate the solution conductivities, σ, using the relations due to Stogryn (IEEE TRAN on MICROWAVE THEORY and TECH, Aug 1971 p733-736).

(9) Calculate the cell constant (L/A) from the relation: $L/A = R(\infty)\sigma$.

(10) Perform procedures A. (4)-(10) using SRM 711 glass

(11) The difference between reported and calculated resistivities of SRM 711 shall be within ± 15%.

APPENDIX E

HEALTH AND SAFETY PLAN

Health and Safety Plan for the Remedial Design Bench-Scale Treatability Study for the Minimum Additive Waste Stabilization

Environmental Remedial Action Project
Fernald Environmental Management Project
Fernald, Ohio

WEMCO Subcontract No. 2-21487
November 1992
Revision No. 0

Operable Unit 1, Project Order 33

PARSONS

Fairfield Executive Center
6120 South Gilmore Road
Fairfield, Ohio 45014

Health and Safety Plan for the Remedial Design Bench-Scale Treatability Study for the Minimum Additive Waste Stabilization

APPROVED FOR ISSUE

Prepared By:

Shawn R. French 11/16/92

Health and Safety Coordinator, PARSONS — Date

Approved By:

Scott J. Mallette 11/16/92

Project Manager, Operable Unit 1, PARSONS — Date

Reviewed By:

Project Engineer, WEMCO — Date

Approved By:

Manager, Engineering, WEMCO — Date

Manager - Industrial, Radiological Safety and Training, WEMCO — Date

Health and Safety Plan for the Remedial Design Bench-Scale Treatability Study for the Minimum Additive Waste Stabilization

CONTENTS

SECTION

1.0 Tasks to be Performed 1-1

1.1 Collect and Place Contaminated Soil in Drums and Move Drums to Plant 9 Storage Area 1-1

1.2 Transfer Contaminated Soil from the Drums to the Soil Washing Unit 1-2

1.3 Operate the Soil Washing Unit 1-2

1.4 Transfer Cleaned Soil and Concentrated Contaminated Soil to Containers for Storage 1-2

1.5 Operate the Water Treatment System 1-2

1.6 Collect and Place Contaminated Sludge in Drums/Tank Trailer from Waste Pit 5 and Move Drums/Tank Trailer to Plant 9 Storage Area 1-2

1.7 Transfer Contaminated Sludge from the Drums/Tank Trailer to the Vitrification Unit 1-3

1.8 Addition of Chemical Additives to Vitrification Feed Materials 1-3

1.9 Operate the Vitrification Unit 1-3

1.10 Transfer Empty Sludge Contaminated Drums/Tank Trailer Back to Plant 9 Storage Area 1-3

1.11 Transfer Stabilized Glass Waste Marbles to Containers for Storage 1-3

2.0 Site History 2-1

3.0 Task-Specific Hazard Assessments 3-1

3.1 Physical Hazards 3-1

3.2 Radiological Hazards 3-4

3.3 Chemical Hazards 3-4

4.0 Monitoring 4-1

4.1 Goals 4-1

4.2 Monitoring Equipment and Frequency of Monitoring 4-1

4.3 Field Action Limits Guidelines 4-4

5.0 Personal Protective Equipment 5-1

CONTENTS (Continued)

6.0 Work Site Safety Requirements 6-1
- 6.1 Equipment Safety 6-1
- 6.2 Work Area Safety 6-1

7.0 Site Control 7-1
- 7.1 Access 7-1
- 7.2 Bioassay Samples 7-3
- 7.3 Medical Monitoring 7-3
- 7.4 Training Requirements 7-3
- 7.5 Safety Meetings 7-4

8.0 Exposure Symptoms 8-1

9.0 Site Entry Procedures 9-1

10.0 Decontamination 10-1

11.0 Wastes 11-1

12.0 Contingency Plans 12-1
- 12.1 Incidents or Injuries Involving Possible Intake of Radiological or Chemical Substances by Employees 12-1
- 12.2 Pre-Emergency Planning 12-1
- 12.3 Lines of Authority 12-1
- 12.4 Evacuation 12-2
- 12.5 Emergency Equipment 12-2
- 12.6 Emergency Notification 12-4
- 12.7 Fire, Explosion, or Medical Emergency 12-4
- 12.8 Spill Control Contingency Plan 12-4
- 12.9 Additional Information 12-4

13.0 Confined Space Entry 13-1

14.0 Approval and Compliance Statement 14-1
- 14.1 Provisions 14-1
- 14.2 Amendments to Plan 14-1

CONTENTS (Continued)

15.0 References 15-1

ATTACHMENTS

A Incident Investigation Report
B Guidance for Heat Stress Monitoring and Prevention
C Guidance for Cold Stress Monitoring and Prevention
D FMPC Work Permit/Confined Space Entry Permit

LIST OF ILLUSTRATIONS

FIGURES

2-1 FEMP Site Map

12-1 FEMP Rally Points
12-2 Location of FEMP Medical Department Facility

14-1 Health and Safety Plan Acknowledgement Form

TABLES

3-1 Hazards Associated with the Bench-Scale Treatability Study for the Minimum Additive Waste Stabilization
3-2 Radiological Hazards Table
3-3 Chemical Hazards Table

4-1 Field Action Limit Guidelines

5-1 PPE Associated with the Bench-Scale Treatability Study for the Minimum Additive Waste Stabilization

7-1 Posting Requirements

LIST OF ACRONYMS AND ABBREVIATIONS

AEDO	Assistant Emergency Duty Officer
ALARA	As Low As Reasonably Achievable
APR	Air Purifying Respirator
CFR	Code of Federal Regulations
cpm	counts per minute
DAC	Derived Air Concentration
dBA	A-Weighted Decibels
DOE	United States Department of Energy
EMS	Emergency Message System
FEMP	Fernald Environmental Management Project
gpm	gallons per minute
HEPA	High-Efficiency Particulate Air
IH	Industrial Hygiene
IRS&T	Industrial, Radiological, Safety, and Training
MAWS	Minimum Additive Waste Stabilization
MSDS	Material Safety Data Sheets
OSHA	Occupational Safety and Health Administration
OU	Operable Unit
PID/FID	Photoionization Detector/Flameionization Detector
PPE	Personal Protective Equipment
ppm	parts per million
RCRA	Resource Conservation and Recovery Act
SAR	Supplied Air Respirator
TLD	Thermoluminescent Dosimeter
U	Uranium
WEMCO	Westinghouse Environmental Management Company of Ohio

SECTION 1

TASKS TO BE PERFORMED

This task-specific Health and Safety Plan was prepared as a supplement to the formal sitewide Health and Safety Plan for the Fernald Environmental Management Project (FEMP) site. Personnel from Westinghouse Environmental Management Company of Ohio (WEMCO) and GTS Duratek will use this Health and Safety Plan while conducting the bench-scale treatability study operational tasks as described herein. The contents of this task-specific Health and Safety Plan are consistent with Title 29 Code of Federal Regulations (CFR) 1910.120, *Hazardous Waste Operations and Emergency Response* and the *FEMP Site Health and Safety Plan* (June 1990).

The activities covered by this Health and Safety Plan are part of the Minimum Additive Waste Stabilization (MAWS) Program being conducted at the FEMP site. The bench-scale treatability study, which represents an initial MAWS Program activity, is part of a system which demonstrates the integration of soil washing, ion exchange, and vitrification processes in order to stabilize multiple waste streams while minimizing additives, process generated waste, and stabilized waste volume.

The bench-scale treatability study is divided into two phases. Phase I on-site activities consist of the following: (a) treatment of soils by a TRUclean soil wash system, (b) operation of a water treatment system for treatment of the soil wash water, and (c) operation of a Duramelter™ vitrification system. Phase II on-site activities consist of a demonstration of the fully-integrated system. Only Phase I (a), (b), and (c) activities are covered by this task-specific Health and Safety Plan. RUST Engineering has prepared a Health and Safety Plan to cover activities related to the Plant 9 modifications, installation of the soil wash system, water treatment system, and the Duramelter™. A subsequent Health and Safety Plan will be prepared to cover Phase II activities.

Subsections 1.1 through 1.11 contain a checklist of standard actions that may or may not occur during each of the major tasks associated with Phase I (a), (b), and (c) bench-scale treatability study activities.

1.1 Collect and Place Contaminated Soil in Drums and Move Drums to Plant 9 Storage Area

X	Disturb Surface Soil	X	Involve Radioactivity
X	Disturb Subsurface Soil	___	Disturb Containerized Material
X	Use Heavy Equipment		

1.2 Transfer Contaminated Soil from the Drums to the Soil Washing Unit

___	Disturb Surface Soil	X	Involve Radioactivity
___	Disturb Subsurface Soil	X	Disturb Containerized Material
X	Use Heavy Equipment		

1.3 Operate the Soil Washing Unit

___	Disturb Surface Soil	X	Involve Radioactivity
___	Disturb Subsurface Soil	___	Disturb Containerized Material
___	Use Heavy Equipment		

1.4 Transfer Cleaned Soil and Concentrated Contaminated Soil to Containers for Storage

___	Disturb Surface Soil	X	Involve Radioactivity
___	Disturb Subsurface Soil	___	Disturb Containerized Material
X	Use Heavy Equipment		

1.5 Operate the Water Treatment System

___	Disturb Surface Soil	X	Involve Radioactivity
___	Disturb Subsurface Soil	___	Disturb Containerized Material
___	Use Heavy Equipment		

1.6 Collect and Place Contaminated Sludge in Drums/Tank Trailer from Waste Pit 5 and Move Drums/Tank Trailer to Plant 9 Storage Area

___	Disturb Surface Soil	X	Involve Radioactivity
___	Disturb Subsurface Soil	___	Disturb Containerized Material
X	Use Heavy Equipment	X	Use Dredge

1.7 Transfer Contaminated Sludge from the Drums/Tank Trailer to the Vitrification Unit

___	Disturb Surface Soil	X	Involve Radioactivity
___	Disturb Subsurface Soil	X	Disturb Containerized Material
X	Use Heavy Equipment		

1.8 Addition of Chemical Additives to Vitrification Feed Materials

___	Disturb Surface Soil	X	Involve Radioactivity
___	Disturb Subsurface Soil	X	Disturb Containerized Material
X	Use Heavy Equipment		

1.9 Operate the Vitrification Unit

___	Disturb Surface Soil	X	Involve Radioactivity
___	Disturb Subsurface Soil	___	Disturb Containerized Material
___	Use Heavy Equipment		

1.10 Transfer Empty Sludge Contaminated Drums/Tank Trailer Back to Plant 9 Storage Area

___	Disturb Surface Soil	X	Involve Radioactivity
___	Disturb Subsurface Soil	___	Disturb Containerized Material
X	Use Heavy Equipment		

1.11 Transfer Stabilized Glass Waste Marbles to Containers for Storage

___	Disturb Surface Soil	X	Involve Radioactivity
___	Disturb Subsurface Soil	___	Disturb Containerized Material
X	Use Heavy Equipment		

SECTION 2

SITE HISTORY

The FEMP site has over 350,000 m^3 of pit wastes, over 2,000,000 m^3 of potentially contaminated soils on site, and associated water that needs to be remediated. Vitrification is an attractive remediation alternative for some site soils because organic contaminants are completely oxidized to carbon dioxide and water while radionuclides, heavy metals, and other inorganic contaminants are dissolved into the glass matrix which has a very low leach rate. However, the sludges in the waste pits do not make good glass because they do not contain sufficient silica-bearing compounds. The soils make a good glass but their melting point is too high for economical operation. Based on preliminary results from laboratory studies, the pit wastes behave as a flux that lowers the soil melting point and together the pit wastes and soils make a good glass.

The MAWS Program is designed to take advantage of the fact that the pit wastes and soils make a good glass and related synergism to develop an efficient, minimum cost remediation process for soils, sludges, and other wastes found at the FEMP site. Specifically, MAWS will integrate soil washing (to separate contaminated soils from clean soils), vitrification of mixed waste streams, and ion-exchange to remediate water from the soil washing process and the vitrification off-gas scrubber. Spent ion-exchange media will either be regenerated or combined with the other waste streams and vitrified.

The bench-scale treatability study for the MAWS Program will be performed by Operable Unit (OU) 1 which is responsible for the six waste pits, the Clearwell, the Burn Pit, and the associated soils. The sludges which will be fed to the MAWS bench-scale demonstration will come from wastes existing within OU-1. For this bench-scale study, feed soils will be taken from locations other than hazardous waste management units (i.e., only soils which are not contaminated with Resource Conservation and Recovery Act [RCRA] hazardous waste will be used).

The process equipment for the MAWS bench-scale demonstration will be installed in the southeast open bay of Plant 9 at the FEMP site and are identified in Figure 2-1. The three major subsystems of the demonstration treatment process will be:

1) Vitrification system
2) Soil wash system
3) Ion-exchange water treatment system

The vitrification system capacity will nominally be 300 kg/per day of equivalent dry feed/glass product, but expected process optimization may result in a major increase in throughput. The soil wash system will be capable of handling 0.25 cubic yards of soil per hour. The ion-exchange water treatment system

will be sized to treat 100 gallons per minute (gpm) (70 gpm nominal) of contaminated water. Support facilities will include incoming and in-process material storage area, a staging area for feed makeup materials, a melter feed mixing station, and an off-gas treatment system.

The bench-scale process demonstration of the MAWS Program will take place entirely within the boundaries of the FEMP site and will demonstrate the integrated technologies to achieve a net volume reduction of wastes for OU-1. This demonstration will provide data to confirm OU-1 treatment alternative selection and to support technical feasibility prior to the Record of Decision which is scheduled for December 1994.

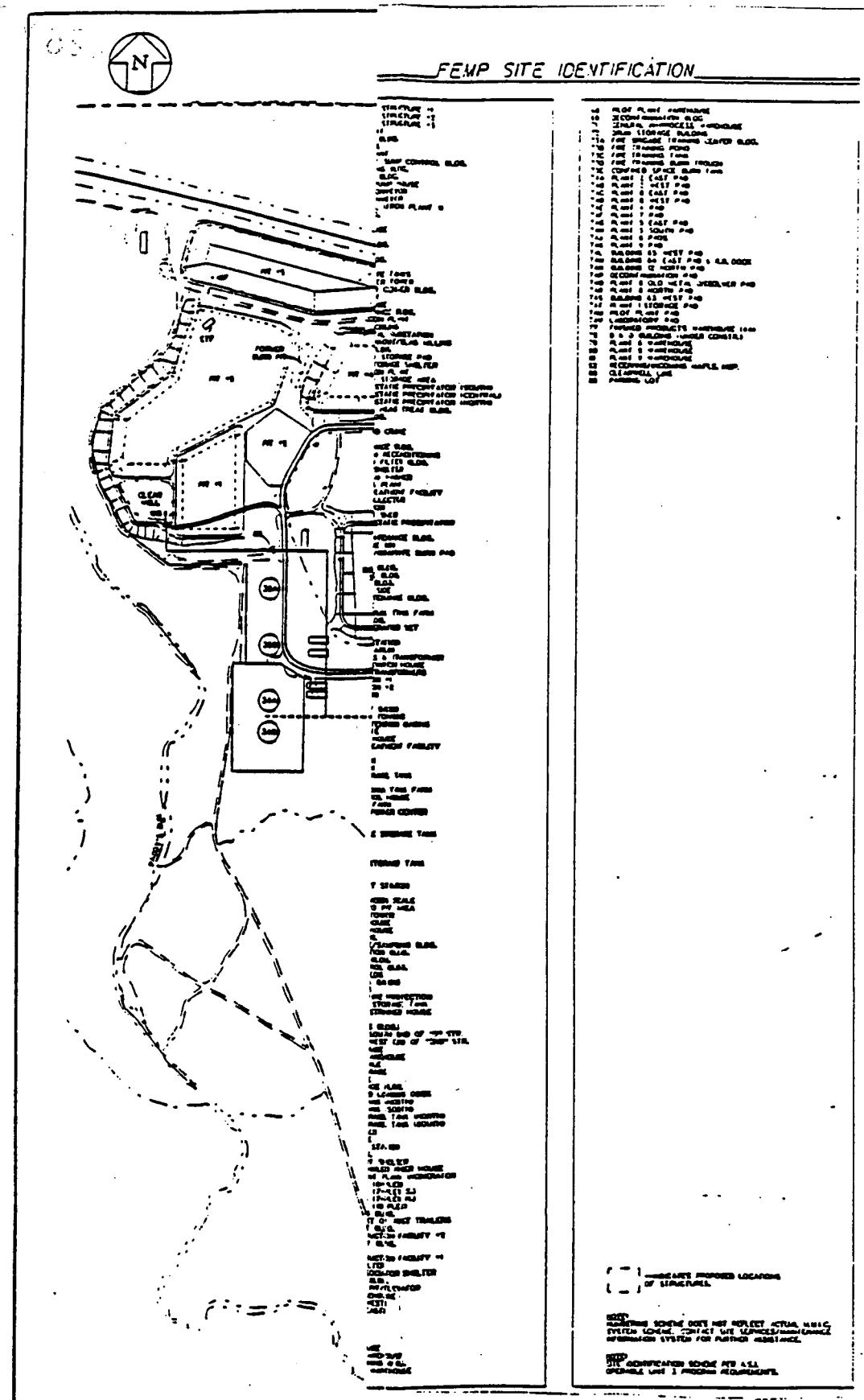

Figure 2-1 FEMP Site Map

2-3

WESTINGHOUSE ENVIRONMENTAL MANAGEMENT CO. OF OHIO
FERNALD, OHIO
FERNALD ENVIRONMENTAL MANAGEMENT PROJECT
U.S. DEPARTMENT OF ENERGY

PRODUCTION AREA SITEMAP
SCALE: 1" = 200'

SECTION 3

TASK-SPECIFIC HAZARD ASSESSMENTS

An assessment of the tasks to be conducted during the bench-scale treatability study indicates that physical, radiological, and chemical hazards will or may be present during operational activities. Table 3-1 lists the anticipated hazards associated with each of the eleven major work tasks identified in Subsections 1.1 through 1.11.

3.1 Physical Hazards

During all work tasks, personnel will be exposed to a variety of slip, trip, and fall hazards. These hazards include uneven ground surfaces, stairs, and elevated surfaces in the trailers which contain the soil washing, water treatment, and vitrification units.

During soil excavation and container filling operations, heavy equipment (e.g., a front-end loader or backhoe) will be used. The use of this equipment and associated service vehicles represents potential hazards to the equipment operator as well as to the personnel adjacent to the work site. Site workers could be struck directly or indirectly as a result of equipment use or breakdown. Forklifts will be used to move drums and containers of contaminated and clean soil. Site workers could be struck during the operation of these vehicles.

During transfer of soil and sludge to the soil wash unit and vitrifier, workers could be struck by moving or falling drums. Also, during operation of the soil wash unit and vitrifier, the operator and support personnel may be exposed to elevated noise levels.

During the soil washing, ion exchange, and vitrification processes, workers could be exposed to pinch points and falling objects associated with the process equipment. Also, during the vitrification process, workers could be exposed to skin contact burns from the vitrification unit shell, piping, and all other associated equipment where heat transfer takes place.

Table 3-1 - Hazards Associated with the Bench-Scale Treatability Study for the Minimum Additive Waste Stabilization

Work Tasks	Physical Hazards	Radiological Hazards	Chemical Hazards
1.1 Collect and place contaminated soil in drums and move drums to Plant 9 Storage Area	Slip, trip, fall; moving heavy equipment and service vehicles	Low levels of penetrating gamma radiation. Potential inhalation/ingestion of radioactive particulates	Note 3
1.2 Transfer contaminated soil from the drums to the soil washing unit	Slip, trip, fall; moving heavy equipment; falling drums	Low levels of penetrating gamma radiation. Potential inhalation/ingestion of radioactive particulates	Note 3
1.3 Operate the soil washing unit	Slip, trip, fall, noise, pinch points, and falling objects	Low levels of penetrating gamma radiation. Potential inhalation/ingestion of radioactive particulates	Note 3
1.4 Transfer cleaned soil and concentrated contaminated soil to containers and move to Plant 9 Storage Area	Slip, trip, fall; moving heavy equipment	Low levels of penetrating gamma radiation. Potential inhalation/ingestion of radioactive particulates	Note 3
1.5 Operate the water treatment system	Slip, trip, fall, noise, pinch points, and falling objects	Low levels of penetrating gamma radiation. Potential inhalation/ingestion of radioactive particulates and liquid	
1.6 Collect and place contaminated sludge in drums/tank trailer from Waste Pit 5 and move drums/tank trailer to Plant 9 Storage Area	Slip, trip, fall; moving heavy equipment and service vehicles	Low levels of penetrating gamma radiation. Potential inhalation/ingestion of radioactive particulates	Note 1

Table 3-1 (Continued)

Work Tasks	Physical Hazards	Radiological Hazards	Chemical Hazards
1.7 Transfer contaminated sludge from the drums/tank trailer to vitrification unit	Slip, trip, fall; moving heavy equipment and falling drums	Low levels of penetrating gamma radiation. Potential inhalation/ingestion of radioactive particulates	Note 1
1.8 Addition of chemical additives to vitrification feed materials	Slip, trip, fall; moving heavy equipment and service vehicles	Low levels of penetrating gamma radiation. Potential inhalation/ingestion of radioactive particulates	Note 1 Note 2
1.9 Operate the vitrification unit	Slip, trip, fall, noise, pinch points, falling objects, and skin contact burns	Low levels of penetrating gamma radiation. Potential inhalation/ingestion of radioactive particulates	Note 1
1.10 Transfer empty sludge contaminated drums/tank trailer back to Plant 9 Storage Area	Slip, trip, fall; moving heavy equipment and service vehicles	Low levels of penetrating gamma radiation. Potential inhalation/ingestion of radioactive particulates	Note 1
1.11 Transfer stabilized glass waste marbles to containers and move to designated storage area	Slip, trip, fall; moving heavy equipment and service vehicles	Low levels of penetrating gamma radiation. Potential inhalation/ingestion of radioactive particulates	

Notes:

1) Based on the Waste Pit 5 Characterization Investigation Study (Weston 1987) previous sampling of Waste Pit 5 contents indicated the presence of several organic and inorganic contaminants (i.e., barium, acetone, arsenic, cadmium, chromium, methylene chloride, and PCBs).

2) Based on the GTS Duratek Input for MAWS Work Plan (September 1992), potential chemical additives to vitrification feed materials are sodium monoxide, boron oxide, and calcium oxide.

3) Once soil locations have been identified, potential chemical hazards will be evaluated.

3.2 Radiological Hazards

The feed soils for the soil wash unit will not contain RCRA hazardous waste. Table 3-2 lists the primary hazard and exposure limits for the anticipated radionuclides to which workers may be exposed. Workers may ingest or inhale radioactive particulates from soil excavation/soil washing operations or be splashed with radioactive liquid/filter media following water treatment operations.

Based on the Waste Pit 5 Characterization Investigation Study (Weston 1987), several radionuclides (cesium, neptunium, plutonium, radium, ruthenium, strontium, technetium, thorium, and uranium) were identified in the sludge material. The sludge material from Waste Pit 5 and the contaminated fraction exiting the soil washing system will be used as feed materials for the vitrification system. Based on the radiological contaminants and exposure limits listed in Table 3-2, Thorium-232 will be the limiting radionuclide concentration used for personnel monitoring during sludge handling operations.

3.3 Chemical Hazards

During the 1987 Weston study of the waste pits at the FEMP, a variety of organic and inorganic chemical constituents were identified in the contents of Waste Pit 5. Inorganic chemicals in the pit contents were generally observed at concentrations comparable to soils found throughout the eastern United States, but arsenic and barium were observed at elevated concentrations. These chemicals may pose an inhalation/ingestion hazard to personnel involved in the collection and placement of contaminated sludge in drums/transferring contaminated sludge to vitrification unit or being splashed with liquid containing chemical contaminants during these operations.

While it is recognized that these chemicals have been placed in the pit, it is not believed that the Permissible Exposure Limit(s) (PELs) will be exceeded during the field work activities. The concentration levels are low based on the 1987 Weston study of Waste Pit 5 contents, except for the arsenic and barium constituents.

During the vitrification process, chemicals may need to be added to the feed materials. Potential additives are sodium monoxide, boron oxide, and calcium oxide. These chemicals may pose an inhalation/ingestion hazard to personnel involved in the adding/mixing operations. During the adding/mixing process, the oxide powder dust should be kept As Low As Reasonably Achievable (ALARA). Workers shall follow the manufacturer's material safety data sheets (MSDS) recommendations for material handling. MSDSs shall be provided by GTS Duratek upon receipt of chemicals and attached as an addendum to the Health and Safety Plan. Laboratory studies will determine which, if any, of these chemicals are needed for the on-site vitrification process. Each time a new chemical product is brought on site for the project, a MSDS must accompany it and WEMCO IRS&T must be notified.

The chemical additives for the vitrification process will be stored in Plant 9 in a chemical storage cabinet away from reactive sources. The chemicals will be transported from the cabinet to a loading hopper designed to feed the additives into the vitrifier, which will also be located in Plant 9. The chemicals will be added manually to the hopper system.

Table 3-2 - Radiological Hazards Table

Potential Contaminant	Primary Hazard	Exposure Limit[1/]
Cesium-137	Ingestion/Inhalation	$7x10^{-8}$ µCi/ml[2/]
Neptunium-237	Ingestion/Inhalation	$2x10^{-12}$ µCi/ml[2/]
Plutonium-238	Ingestion/Inhalation	$3x10^{-12}$ µCi/ml[2/]
Plutonium-239	Ingestion/Inhalation	$2x10^{-12}$ µCi/ml[2/]
Plutonium-240	Ingestion/Inhalation	$2x10^{-12}$ µCi/ml[2/]
Radium-226	Ingestion/Inhalation	$3x10^{-10}$ µCi/ml[2/]
Ruthenium-106	Ingestion/Inhalation	$2x10^{-8}$ µCi/ml[2/]
Strontium-90	Ingestion/Inhalation	$2x10^{-9}$ µCi/ml[2/]
Technetium-99	Ingestion/Inhalation	$2x10^{-6}$ µCi/ml[2/]
Thorium-228	Ingestion/Inhalation	$4x10^{-12}$ µCi/ml[2/]
Thorium-230	Ingestion/Inhalation	$3x10^{-12}$ µCi/ml[2/]
Thorium-232	Ingestion/Inhalation	$1x10^{-12}$ µCi/ml[2/]
Uranium-234	Ingestion/Inhalation	$2x10^{-11}$ µCi/ml[2/]
Uranium-235	Ingestion/Inhalation	$2x10^{-11}$ µCi/ml[2/]
Uranium-238	Ingestion/Inhalation	$2x10^{-11}$ µCi/ml[2/]

NOTES:

1/ The exposure limit values are given for individual radionuclides. For known mixtures of radionuclides, the sum of the ratio of the observed concentration of a particular radionuclide and its corresponding limit for all radionuclides in the mixture must not exceed 1.0.

2/ Derived Air Concentration (DAC).

SOURCE:

United States Department of Energy (DOE) Order 5480.11, "Radiation Protection for Occupational Workers," DOE, July 20, 1989.

Table 3-3 lists the primary hazard and exposure limits for the chemicals of concern for the contaminated sludge handling and vitrification process operations.

Table 3-3 - Chemical Hazards Table

Potential Contaminant	Primary Hazard(s)	Exposure Limit[1]
Acetone	Inhalation/Ingestion	750 ppm
Aroclor-1248 (PCB)	Skin Absorption	0.001mg/m^3
Aroclor-1254 (PCB)	Skin Absorption	0.5 mg/m^3 (Skin)
Arsenic (inorganic)	Ingestion	0.010 mg/m^3
Barium (soluble)	Ingestion	0.5 mg/m^3
Cadmium (Dust)	Ingestion	0.005 mg/m^3
Chromium (II) and (III) Compounds	Ingestion/Contact	0.5 mg/m^3
Methylene Chloride*	Inhalation/Ingestion	500 ppm
Boron Oxide	Inhalation/Ingestion	10 mg/m^3
Calcium Oxide	Inhalation/Ingestion	2 mg/m^3
Sodium Monoxide	Inhalation/Ingestion	Note[2]

Notes:

1/ The Exposure Limit Values are given for individual chemicals. The Exposure Limit is based on a time-weighted average concentration for a normal 8-hour work day and a 40-hour work week, to which nearly all workers may be repeatedly exposed, day after day, without adverse effect.

2/ No exposure limit(s) are published by Occupational Safety and Health Service agencies. Follow manufacturer's MSDS recommendations.

* Detection of this constituent may have been attributable to laboratory contamination.

Sources: National Institute for Occupational Safety and Health Pocket Guide to Chemical Hazards, United States Department of Health and Human Services, June 1990.

SECTION 4

MONITORING

4.1 Goals

Prior to initiating soil excavation and drum filling activities, air monitoring will be conducted by WEMCO Radiological Safety and Industrial Hygiene personnel, as required at the time of work permit(s) issuance, to ensure that exposure limits are not exceeded. Radioactive contamination monitoring will be performed to minimize the spread of contamination when soil media or sludge material is disturbed or cleaned.

4.2 Monitoring Equipment and Frequency of Monitoring

4.2.1 Airborne Radioactive Particulates

A representative air sample in the immediate breathing zone or general area of a worker actively involved in excavation, soil/sludge container filling, soil washing, water treatment, and vitrification operations will be collected to determine the concentration of long-lived airborne radioactive particulates to which workers are exposed. The sample will be collected using portable, battery-powered air pumps with 37 mm diameter membrane filters. The air sample filter will be checked for gross radioactivity to verify the adequacy of respiratory protection. A daily air sample which indicates that personnel may have been exposed to greater than 40 DAC-hours in one week without respiratory protection will trigger dose assessment by WEMCO Radiological Safety, Dosimetry Subsection.

4.2.2 Radioactive Surface Contamination

When personnel are excavating soil and filling soil/sludge containers, surveys of removable radioactive surface contamination will be performed by WEMCO Radiological Safety personnel in the work area. Direct reading instruments and/or field swipe surveys will be used on excavation equipment and containers. Alpha, beta, and gamma detectors will be used by a WEMCO Radiation Technician to monitor excavated soil/sludge. External surfaces of the soil wash, water treatment, and vitrification units will also be monitored for removable radioactive contamination.

4.2.3 Radiation Surveys

Prior radiation surveys will be used by WEMCO Radiological Safety personnel to establish general area radiation levels. Radiation surveys will be conducted periodically during operational activities by WEMCO Radiological Safety personnel. Portable radiation monitoring devices will be calibrated and maintained in accordance with WEMCO Standard Operating Procedures.

4.2.4 Potential Chemical Hazards

Exposure to significant chemical vapor concentrations is not expected during the collection and placement of contaminated sludge into drums from Waste Pit 5/transfer contaminated sludge from drums to vitrification unit. However, WEMCO Industrial Hygiene (IH) personnel will use a Photoionization Detector (PID)/Flameionization Detector (FID) to monitor the air near the breathing zone of the workers involved in the contaminated sludge handling operations. The frequency that the PID/FID meter measurements will be made are based on current readings and on the recommendation of the IH technician.

WEMCO IH personnel will conduct personal air sampling in the immediate breathing zone area of workers actively involved in the collection and placement of contaminated sludge into drums from Waste Pit 5/transfer contaminated sludge from drums to vitrification unit to determine the workers' exposure to methylene chloride, arsenic, and barium. In addition direct reading instruments, such as Dräger tubes shall be used to detect the presence of methylene chloride.

4.2.5 Thermoluminescent Dosimetry

Thermoluminescent dosimeters (TLDs) will be worn by all field personnel during all field aspects of the bench-scale treatability study.

4.2.6 Physical Hazards

Noise levels associated with the soil excavation, container filling activities, soil washing, water treatment, and vitrification operations will be monitored by a WEMCO IH representative. Worker hearing protection will be required if noise levels exceed 85 A-Weighted Decibels (dBA) over any length of time. WEMCO IH personnel will determine the need for worker hearing protection.

Heat/cold stress can be a major hazard, especially for those workers wearing protective clothing. Depending on the ambient temperature and the work being performed, heat/cold stress monitoring of personnel may be required and will be directed by the GTS Duratek Field Supervisor. Attachments B

and C provide guidance for heat/cold stress monitoring and prevention. Heat/cold stress monitoring of personnel will be performed by WEMCO IH personnel.

4.3 Field Action Limits Guidelines

Table 4-1 presents the field action limit guidelines for radiological and chemical contaminants that may be encountered in the work environment during field activities.

Table 4-1 - Field Action Limit Guidelines

INSTRUMENT	INTERVAL	LIMIT	ACTION
Alpha Probe[1]	Pre-Job and Intermittent[2]	500 counts per minute (cpm)[3]	APR[4]
		>25,000 cpm	Withdraw
Beta/Gamma Probe[1]	Pre-Job and Intermittent[2]	5,000 cpm[3]	APR[4]
		>250,000 cpm	Withdraw
PID/FID Meter	Intermittent[2]	Detection to 10 ppm[5]	APR[4]
		10-25 ppm	SAR[6]
		>25 ppm	Withdraw

Notes:

1/ "Frisking" for alpha contamination and beta/gamma contamination using hand held alpha scintillator and Geiger Mueller detectors respectively.

2/ "Intermittent" is as deemed necessary by the WEMCO Radiological Safety and/or IH Technician, or at a minimum of once a day.

3/ Above background.

4/ Full-face air purifying respirator with High Efficiency Particulate Air (HEPA) or organic vapor, acid gas, fume cartridges (Health Physics Review). Disposable protective clothing, such as Tyvek/Saranex coveralls and a step-off decontamination, will also be required at any time Air Purifying Respirator (APR) are used.

5/ 1 ppm above background.

6/ Supplied air respirator.

SECTION 5

PERSONAL PROTECTIVE EQUIPMENT

The following Personal Protective Equipment (PPE) is required to be worn by personnel who perform the work tasks described in Subsections 1.1 through 1.11:

Table 5-1 - PPE Associated with the Bench-Scale Treatability Study for the Minimum Additive Waste Stabilization

WORK TASKS		POTENTIAL/EXPECTED HAZARD	PERSONAL PROTECTIVE EQUIPMENT
1.1	Collect and place contaminated soil in drums and move drums to Plant 9 Storage Area.	Eye injury	Safety glasses
		Head injury	Hard hat
		Foot injury	Steel-toed boots/shoe covers
		Hand injury	Leather-palm gloves
		Back injury	Back support belt
		Body contamination	Disposable Tyvek over controlled area coveralls
		Inhalation of airborne particulates during excavation and drum filling operations	Full-face air purifying respirator with HEPA filter cartridges
1.2	Transfer contaminated soil from drums to the soil washing unit	Eye injury	Safety glasses
		Head injury	Hard hat
		Foot injury	Steel-toed boots/shoe covers
		Hand injury	Leather-palm gloves
		Back injury	Back support belt
		Body contamination	Disposable tyvek over controlled area coveralls
		Inhalation of airborne particulates during soil transfer operations	Full-face air purifying respirator with HEPA filter cartridges

Table 5-1 (Continued)

WORK TASKS		POTENTIAL/EXPECTED HAZARD	PERSONAL PROTECTIVE EQUIPMENT
1.3	Operate the soil washing unit	Eye injury	Safety glasses
		Head injury	Hard hat
		Foot injury	Steel-toed boots/shoe covers
		Body contamination	Controlled area coveralls
		Hearing loss	Ear plugs/muffs, if noise levels exceed 85 dBA over any time period
1.4	Transfer cleaned soil and concentrated contaminated soil to containers for storage	Eye injury	Safety glasses
		Head injury	Hard hat
		Foot injury	Steel-toed boots/shoe covers
		Hand injury	Leather-palm gloves
		Body contamination	Disposable tyvek over controlled area coveralls
		Inhalation of airborne particulates during soil transfer operations	Full-face air purifying respirator with HEPA filter cartridges
1.5	Operate the water treatment system	Eye injury	Safety glasses
		Head injury	Hard hat
		Foot injury	Steel-toed boots/shoe covers
		Body contamination	Controlled area coveralls
		Hearing loss	Ear plugs/muffs, if noise levels exceed 85 dBA over any time period

Table 5-1 (Continued)

WORK TASKS		POTENTIAL/EXPECTED HAZARD	PERSONAL PROTECTIVE EQUIPMENT
1.6	Collect and place contaminated sludge in drums/tank trailer from Waste Pit 5 and move drums/tank trailer to Plant 9 Storage Area	Eye injury	Safety glasses
		Head injury	Hard hat
		Foot injury	Steel-toed boots/shoe covers
		Hand injury	Chemical protective gloves (IH Review)
		Back injury	Back support belt
		Body contamination	Disposable Tyvek over controlled area coveralls
		Inhalation of airborne particulates	Full-face air purifying respirator with radioactive material HEPA filter and organic vapor/acid gas combination cartridges
1.7	Transfer contaminated sludge from the drums/tank trailer to vitrification unit	Eye injury	Safety glasses
		Head injury	Hard hat
		Foot injury	Steel-toed boots/shoe covers
		Hand injury	Chemical protective gloves (IH Review)
		Back injury	Back support belt
		Body contamination	Disposable Tyvek over controlled area coveralls
		Inhalation of airborne particulates	Full-face air purifying respirator with radioactive material HEPA filter and organic vapor/acid gas combination cartridges

Table 5-1 (Continued)

WORK TASKS		POTENTIAL/EXPECTED HAZARD	PERSONAL PROTECTIVE EQUIPMENT
1.8	Addition of chemical additives to vitrification feed materials	Eye injury	Safety goggles, if full-face respirator is not worn.
		Head injury	Hard hat
		Foot injury	Steel-toed boots/shoe covers
		Hand injury	Chemical protective gloves (IH Review)
		Body contamination	Disposable Tyvek over controlled area coveralls
		Inhalation of airborne particulates	Full-face air purifying respirator with radioactive material HEPA filter and organic vapor/acid gas combination cartridges
1.9	Operate the vitrification unit	Eye injury	Safety glasses
		Head injury	Hard hat
		Foot injury	Steel-toed boots/shoe covers
		Body contamination	Controlled area coveralls
		Hearing loss	Ear plugs/muffs, if noise levels exceed 85 dBA over any time period
1.10	Transfer empty sludge contaminated drums/tank trailer back to Plant 9 Storage Area	Eye injury	Safety glasses
		Head injury	Hard hat
		Foot injury	Steel-toed boots/shoe covers
		Hand injury	Chemical protective gloves (IH Review)
		Back injury	Back support belt
		Body contamination	Disposable Tyvek over controlled area coveralls

Table 5-1 (Continued)

WORK TASKS	POTENTIAL/EXPECTED HAZARD	PERSONAL PROTECTIVE EQUIPMENT
1.11 Transfer stabilized glass waste marbles to containers for storage	Eye injury	Safety glasses
	Head injury	Hard hat
	Foot injury	Steel-toed boots/shoe covers
	Hand injury	Leather-palm gloves
	Body contamination	Disposable Tyvek over controlled area coveralls

Additional PPE may be specified by WEMCO Industrial, Radiological, Safety and Training (IRS&T) personnel.

SECTION 6

WORK SITE SAFETY REQUIREMENTS

6.1 Equipment Safety

Excavation and drum/container moving equipment will be inspected prior to each day's use in order to ensure that all safety features (e.g., kill switch and backup alarm) are operational. A record/log of the equipment safety inspections shall be documented and made available upon request by WEMCO and PARSONS representatives. Only authorized and qualified personnel will be allowed to operate this equipment.

Safety features of the soil wash, water treatment, and vitrification units (e.g., guards and alarms) will be inspected prior to system startup to ensure that they are operational. These features will also be inspected periodically during system operation. All hazardous parts of the units (e.g., electric, moving parts) will be clearly marked.

6.2 Work Area Safety

A rope and/or caution tape barrier with posted safety requirements will be maintained around the excavation area, sludge drum filling area, soil washing, water treatment, and vitrification units work areas. One or more safety watch personnel may be stationed in the work area to ensure that no unauthorized personnel accidentally enter the work site when drums of soil/sludge are being filled and emptied into the soil wash unit and/or vitrifier system.

During the daily work activities, a GTS Duratek Field Supervisor or Job Foreman shall be at the Waste Pit 5 and/or MAWS work location at all times while work is in progress. The Field Supervisor or Job Foreman shall have an emergency communication radio at the job site at all times. Communications to WEMCO's emergency response personnel shall be by radio.

Site personnel working around moving equipment (i.e., back-hoe, forklifts, and trucks) shall wear clothing easily noticeable by the equipment operator (i.e., orange day-glow vest) to minimize the potential of being struck. Pinch points on all equipment which constitutes a hazard to the site personnel during operations shall be guarded.

During the MAWS bench-scale treatability study operations in Plant 9, RUST Engineering will also be conducting Plant 9 construction modifications. RUST, GTS Duratek, and WEMCO personnel will communicate on a daily basis to coordinate work activities to ensure all health and safety concerns are

communicated and addressed. All conflicts in work activities will be resolved by the WEMCO Project Engineer responsible for the project.

SECTION 7

SITE CONTROL

7.1 Access

The field tasks associated with this bench-scale treatability study will occur entirely inside a controlled area (Plant 9) of the FEMP site. Controlled areas of the FEMP site are maintained in accordance with the *Radiological Controls Requirements Manual* (RM-0009) which requires the following:

1) The wearing of dosimetry

2) Radiation safety training

3) Limitations on entry for personnel with open wounds or recent medical tests with radionuclides

4) Radiological area postings

5) Protective clothing

6) Limitations on food, beverages, and tobacco

7) General rules for work

8) Contamination control

9) Monitoring and showering requirements upon exiting from the Controlled Area and Radiological Areas

A Radiation Work Permit with the specifications of this task-specific health and safety plan will be required for work in the area.

Per the requirements of 29 CFR Part 1910.120, an exclusion zone (defined by a barricade rope) will be established around the immediate excavation and soil/sludge container filling area and the soil wash, water treatment, and vitrification units. The exclusion zone is an area of high potential hazard due to physical, chemical, and/or radiological dangers. Access to the exclusion zone will be restricted to trained and qualified personnel who must enter to perform their job duties. Radiological Safety will establish controls consisting of step-off pads at the controlled area exit point. This contamination reduction zone will be

used for monitoring at the step-off pad and for removal of disposable PPE. Only limited equipment decontamination will be allowed at the work site.

7.1.1 Radiological Postings

Radiological areas will be posted in accordance with *Radiological Controls Requirements Manual* (RM-0009). Table 7-1 provides a brief summary of posting requirements applicable to radionuclides likely to be encountered during removal action activities.

Table 7-1 - Posting Requirements

Controlled Area Posting	Contamination Level
Regulated Area	
(U-235 and U-238)	> 1,000 dpm α/100 cm^2 removable > 5,000 dpm α/100 cm^2 fixed plus removable
(Ra-226, Th-228, Th-230, Th-232, and Sr-90)	> 200 dpm α/100 cm^2 removable > 1,000 dpm α/100 cm^2 fixed plus removable
(Beta - Gamma Emitters)	> 1,000 dpm β-γ/100 cm^2 removable > 5,000 dpm β-γ/100 cm^2 fixed plus removable
Contamination Area	
(U-235 and U-238)	> 10,000 dpm α/100 cm^2 removable > 50,000 dpm α/100 cm^2 fixed plus removable
(Ra-226, Ra-228, Th-228, Th-230, Th-232, and Sr-90)	> 2,000 dpm α/100 cm^2 removable > 10,000 dpm α/100 cm^2 fixed plus removable
(Beta - Gamma Emitters)	> 10,000 dpm β-γ/100 cm^2 removable > 50,000 dpm β-γ/100 cm^2 fixed plus removable
Airborne Radioactivity Area	Potential for 0.8 DAC hours per shift.
Respirator Area	> 8.0 DAC hours in a single shift <u>or</u> > 2 DAC hours per shift averaged over 1 calendar quarter; and > 50,000 dpm α/100 cm^2 removable or 100,000 β-γ/100 cm^2 removable.
Radiation Area	$\geq$ 5 mrem/hr and < 100 mrem/hr

Source: *Radiological Controls Requirements Manual* (RM-0009), May 13, 1992.

7.2 Bioassay Samples

Personnel involved in this project are required to participate in a routine periodic urine assay program. Any circumstance which could have resulted in an intake of any radioactive materials by inhalation, ingestion, or absorption shall immediately be reported to a supervisor. The supervisor shall immediately report the circumstance of possible radioactive materials intake to the WEMCO Radiological Safety Section for evaluation. The involved employees shall report to the Urine Sampling Station at the end of their shift to complete an Incident Investigation Report (Form FMPC-ES&H-1458) and submit an incident urine sample. The involved employees shall also report to the Urine Sampling Station at the start of their next shift to submit a follow-up urine sample.

If air sample analyses indicate that airborne radioactivity levels were sufficient to deliver more than 8 DAC-hours to an individual, in-vivo monitoring and/or other bioassay measurements will be performed on that individual as deemed appropriate by the WEMCO Dosimetry Subsection. Air samples, which indicate that personnel may have been exposed to greater than 40 DAC-hours in one week, will trigger dose assessment by the WEMCO Dosimetry Subsection. Employees are responsible for complying with additional requirements as specified by the WEMCO Radiological Safety Section.

7.3 Medical Monitoring

In accordance with 29 CFR 1910.120 requirements, all bench-scale treatability study field personnel are required to participate in a medical monitoring program which consists of the following items:

1) A baseline medical examination
2) Annual medical examination
3) Required medical examinations after potential exposures
4) WEMCO respirator clearance for users

Each individual shall be subject to a medical surveillance approval by the WEMCO Director, Medical Services. The approval statement shall certify that each individual is medically qualified to perform the work and is physically fit to wear PPE.

7.4 Training Requirements

All personnel assigned to the tasks will, as a minimum, meet the following requirements:

1) Documented review of the health and safety plan for this work, including site-specific hazards and procedures

2) WEMCO radiation safety training

3) WEMCO annual respiratory training and quantitative fit test or equivalent approved by WEMCO IH

4) Site nuclear criticality training

5) Portable fire extinguisher, General Safety, You and Occupational Safety and Health Administration (OSHA), and Energy Control Procedures Awareness training

6) Forty-hour OSHA training (per 29 CFR 1910.120)

7) Eight-hour annual refresher training, as necessary

8) Eight-hour supervisory training (for supervisors)

9) 24-hour supervised field experience for general site workers or 8-hour supervised field experience for occasional site workers

The completion of this training shall be documented by the site training personnel.

7.5 Safety Meetings

A safety meeting, which must be documented, shall be conducted prior to the start of each day's work. This safety meeting will cover the following applicable subjects:

1) Work operations
2) PPE
3) All monitoring data
4) Hazard communications
5) Monitoring tests and results
6) Decontamination
7) Task organization
8) Physical stress
9) Emergency procedures
10) Communications
11) General safety
12) Housekeeping
13) Problems encountered
14) Problems anticipated

SECTION 8

EXPOSURE SYMPTOMS

Exposure to low levels of radiation does not produce acute exposure symptoms. Such exposures may cause delayed effects such as cancer. Since any radiation exposure may involve some degree of risk, exposures are to be kept ALARA. Personal radiation exposures will be monitored by TLDs worn by all personnel conducting field work tasks.

SECTION 9

SITE ENTRY PROCEDURES

Prior to the initiation of the bench-scale treatability study field activities and/or the beginning of daily work activities, the WEMCO Project Engineer or GTS Duratek Field Supervisor will ensure that the following activities have been conducted:

1) Obtain the necessary work permits (e.g., radiation, excavation, and penetration) for field operations.

2) Conduct safety inspection of all excavation and support equipment and soil wash, water treatment, and vitrification units.

3) Establish radio contact, location, and start and stop times with FEMP Control Center.

4) Conduct pre-work plan and safety meeting prior to each day's work activities; exclusion zone, contamination reduction zone, and break areas will be identified.

5) Discuss alternate communication signals (if applicable).

6) Perform respirator check-out and inspection prior to use.

7) Inspect and calibrate all devices to be used for monitoring.

8) Assign all personnel who will be working in the exclusion zone (per 29 CFR 1910.120 requirements) to a buddy system.

9) Test eyewash station and maintain clean, approved liquid in it.

10) Verify location and operation of all emergency equipment. Emergency equipment items are listed in Subsection 12.5.

Entrance to the exclusion zone will be controlled by the WEMCO Project Engineer or GTS Duratek Field Supervisor. Also, a checklist shall be used and signed daily by the GTS Duratek Field Supervisor to verify that all pre-work requirements have been met prior to work activities beginning.

SECTION 10

DECONTAMINATION

An exclusion zone will be established around the soil excavation and sludge drum filling work areas in order to control the potential spread of contamination from soil excavation and container filling activities. As stated in Subsection 7.1, a contamination reduction zone will be established at each work area for removal of any disposable personal protective clothing and cleaning of contaminated equipment. Personnel will enter and exit the posted work area through a step-off pad. At the exit point, personnel will remove any disposable protective clothing and monitor themselves and any outgoing equipment for contamination. All personnel and outgoing equipment will be monitored for contamination in accordance with WEMCO Standard Operating Procedure SP-P-35-029, Rev. 0 (6/28/91), "Unrestricted Release of Materials." Action limits (above background) on equipment of 20 dpm/100 cm^2 alpha (removable), 300 dpm/100 cm^2 alpha (total: fixed plus removable), and 1,000 dpm/100 cm^2 beta/gamma (total: fixed plus removable) will initiate decontamination activities for unrestricted use.

Any detectable alpha contamination and greater than 100 cpm beta-gamma (above background) contamination on any personnel will be reported to WEMCO Radiological Safety, who will assist in decontamination in accordance with WEMCO Standard Operating Procedure SP-P-35-017, Rev. 0 (3/30/89), "Procedure for Personnel Decontamination." Any equipment that cannot initially be decontaminated will be contained and transported to the FEMP Site Decontamination Facility. If the equipment cannot be decontaminated to acceptable levels it will be disposed as radioactive waste in accordance with approved site policies and procedures.

SECTION 11

WASTES

Waste expected to be generated during work activities includes disposable personal protective clothing, decontamination solution and material, containers the soil wash chemicals and vitrification additives came in, filter residue, spent filter media, duds from the vitrification process, spent electrodes, and refractory bricks. Oversized sludge material from Waste Pit 5 which cannot be used will be returned to the pit. Potentially contaminated waste material will be collected, segregated, and placed in drums or other containers. Disposable protective clothing will be placed in plastic bags and disposed as compactible, potentially contaminated waste. Liquid waste from decontamination efforts will be collected, stored, and disposed in accordance with applicable WEMCO procedures.

Waste drums or containers will meet the requirements of 49 CFR Parts 171-178, 40 CFR Parts 264-265 and 300. Hazard warning labels will be applied immediately to all waste containing drums as specified by WEMCO management/supervisors and OU-3 Compliance.

SECTION 12

CONTINGENCY PLANS

All contingency plans shall be consistent with the *FEMP Emergency Plan* (PL-3015).

12.1 Incidents or Injuries Involving Possible Intake of Radiological or Chemical Substances by Employees

Any circumstance which could have resulted in an intake of a radioactive material or other hazardous substances by inhalation, ingestion, or absorption shall be reported to the GTS Duratek Field Supervisor. The supervisor shall immediately report the possible radioactive material or hazardous substance intake to the Radiological Safety Section for evaluation. The involved employee(s) shall report to the Medical Services Section to submit biological samples and complete and Incident Investigation Report. Typically, samples are required at the end of the shift and at the start of the subsequent shift. If the exposure involves uranium, a urine sample is required. Appendix A contains a copy of an Incident Investigation Report.

12.2 Pre-Emergency Planning

During the training and pre-work safety meetings, employees involved in this task will be trained and reminded of the provisions of the plant emergency procedure, alarm signals and communications, evacuation routes, emergency reporting, and the importance of maintaining continual communication with FEMP Emergency Preparedness personnel via two-way radio or cellular phone.

12.3 Lines of Authority

The WEMCO Field Supervisor, or his/her designated representative, has the primary responsibility for the prevention of and the initial response to emergency conditions, in addition to directing emergency response actions at the work site until relieved by the WEMCO Assistant Emergency Duty Officer (AEDO), or the Emergency Response Team. In the event an emergency does occur, the individual involved in or observing the condition shall immediately notify the following personnel in order of availability: the WEMCO Project Engineer/GTS Duratek Field Supervisor; the communications center; the AEDO; the WEMCO Health and Safety Officer; the Project Engineer/OU Manager.

The AEDO is responsible for ensuring that corrective actions have been implemented, appropriate personnel notified, and reports completed as required. Personnel shall report unsafe conditions observed at the work site to the WEMCO Project Engineer/GTS Duratek Field Supervisor or to the WEMCO

Health and Safety Officer, who will stop work activity in the affected area until the hazardous condition(s) can be remedied.

12.4 Evacuation

In the event an evacuation of the work area is required, the WEMCO Project Engineer/GTS Duratek Field Supervisor will be responsible for notifying all personnel involved. All personnel will proceed to the rally point as designated by the WEMCO Project Engineer/Field Supervisor. The FEMP-designated rally points for the standard plant operations are shown on Figure 12-1. The designated rally point for the work area (Plant 9) is Rally Point 3. When the WEMCO Project Engineer is informed that an all-clear condition has been achieved, personnel will be released from the rally point.

In the event of an emergency which necessitates an evacuation of the Exclusion Area, the 3-3, 3-3 alarm signal shall be sounded over the plant alarm system; a voice message will follow over the Emergency Message System (EMS) instructing employees to go to their designated rally point. Personnel shall immediately proceed to the rally point. Personnel will follow instructions given by the rally point coordinator and participate in the accountability process. When an all-clear condition has been achieved, personnel will be released from the rally point. It is conceivable that the plant alarm signal, or EMS, will not be audible in the work area. For this reason, communications with the FEMP communications control center via two-way radio or cellular phone will be maintained at all times by the WEMCO Project Engineer.

12.5 Emergency Equipment

The following safety equipment will be available for use by removal action workers:

1) Fire extinguisher
2) Portable eyewash station
3) Absorbent
4) Spill drums
5) Two-way radio or telephone
6) Respirators
7) Clean-up materials
8) Local evacuation alarm

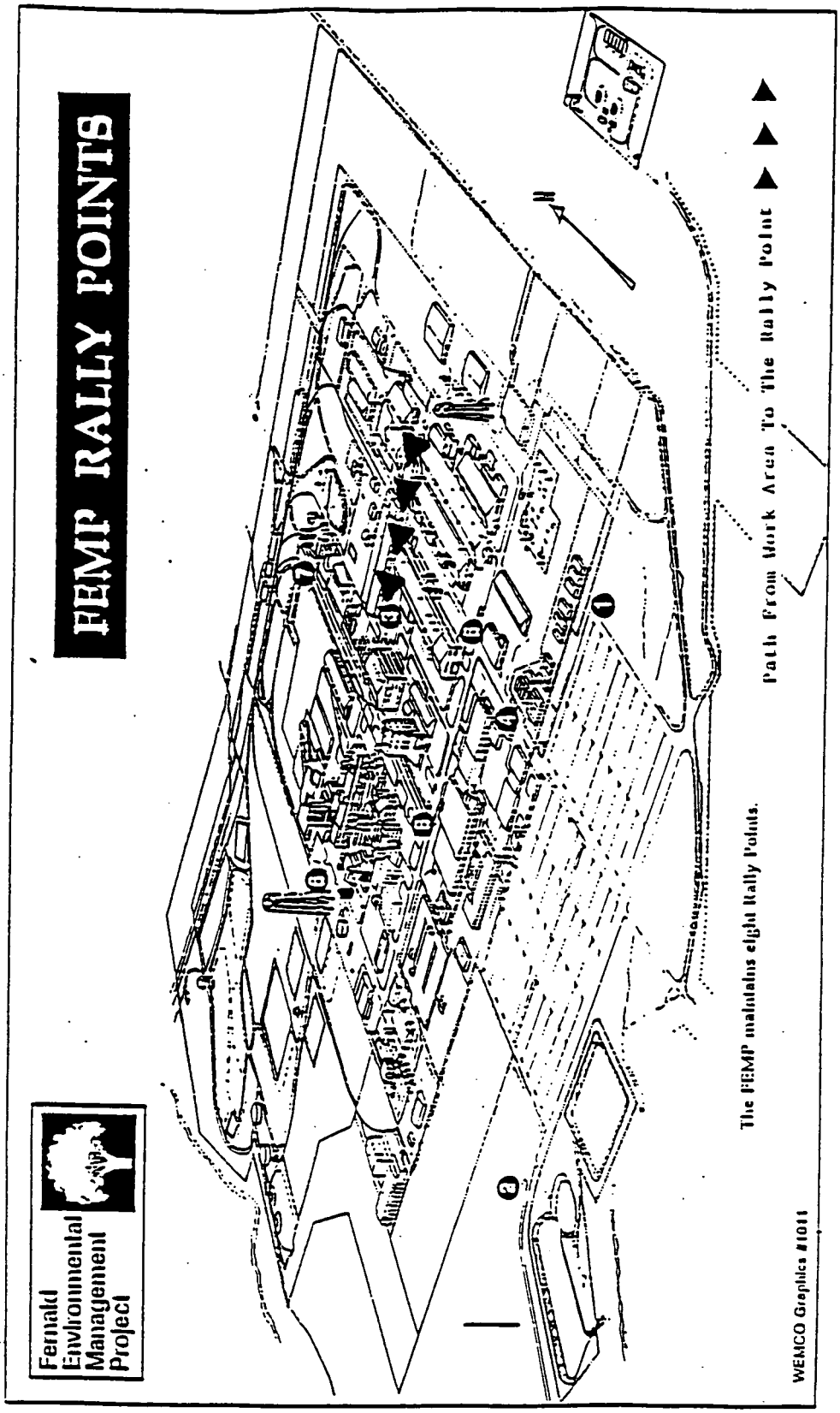

Figure 12-1 - FEMP Rally Points

12.6 Emergency Notification

All emergencies, including spills or leaks, shall be reported immediately. Emergencies can be reported by telephone dialing Extension 6511 or by contacting the communications center via two-way radio. Emergencies can also be reported by pulling a fire alarm pull box (if one is located in the work area[s]) if telephone or radio is not immediately available. Any additional information pertaining to an emergency shall be reported to the responding personnel to assist in defining appropriate response to the emergency.

12.7 Fire, Explosion, or Medical Emergency

In the event of a fire, explosion, or medical emergency, the communication center shall be notified immediately by two-way radio, by manual fire alarm, or by calling Extension 6511. The communication center operator will activate the emergency response team and dispatch them to the emergency location. If a fire is in the incipient stage and perceived controllable without endangering oneself, personnel may use available fire extinguishers. If it is not in the incipient stage, personnel in the immediate area shall evacuate to a safe position and await instructions.

If medical attention is required, and the nature of the injury or illness is minor, the affected personnel shall be taken to the FEMP Medical Department Facility (Building 53) located as shown on Figure 12-2. A map which illustrates the path from the work area to the FEMP Medical Department Facility will be posted in the work area. The FEMP ambulance will be called to transport individuals who have suffered major injury or illness.

12.8 Spill Control Contingency Plan

Spills, regardless of their size or the classification of the liquid, shall be reported immediately. Emergencies can be reported by telephone by dialing Extension 6511 or by contacting the communications center via two-way radio. The Emergency Response Team and AEDO will respond to the spill according to the FEMP Spill Control Contingency Plan.

12.9 Additional Information

12.9.1 Hospitals

The FEMP Medical Department Facility (Building 53) is the primary choice for treatment of on-site injuries. The FEMP ambulance will transport the injured workers to the nearest hospital, if necessary. FEMP maintains an emergency response capability that includes an ambulance and Emergency Medical Technicians.

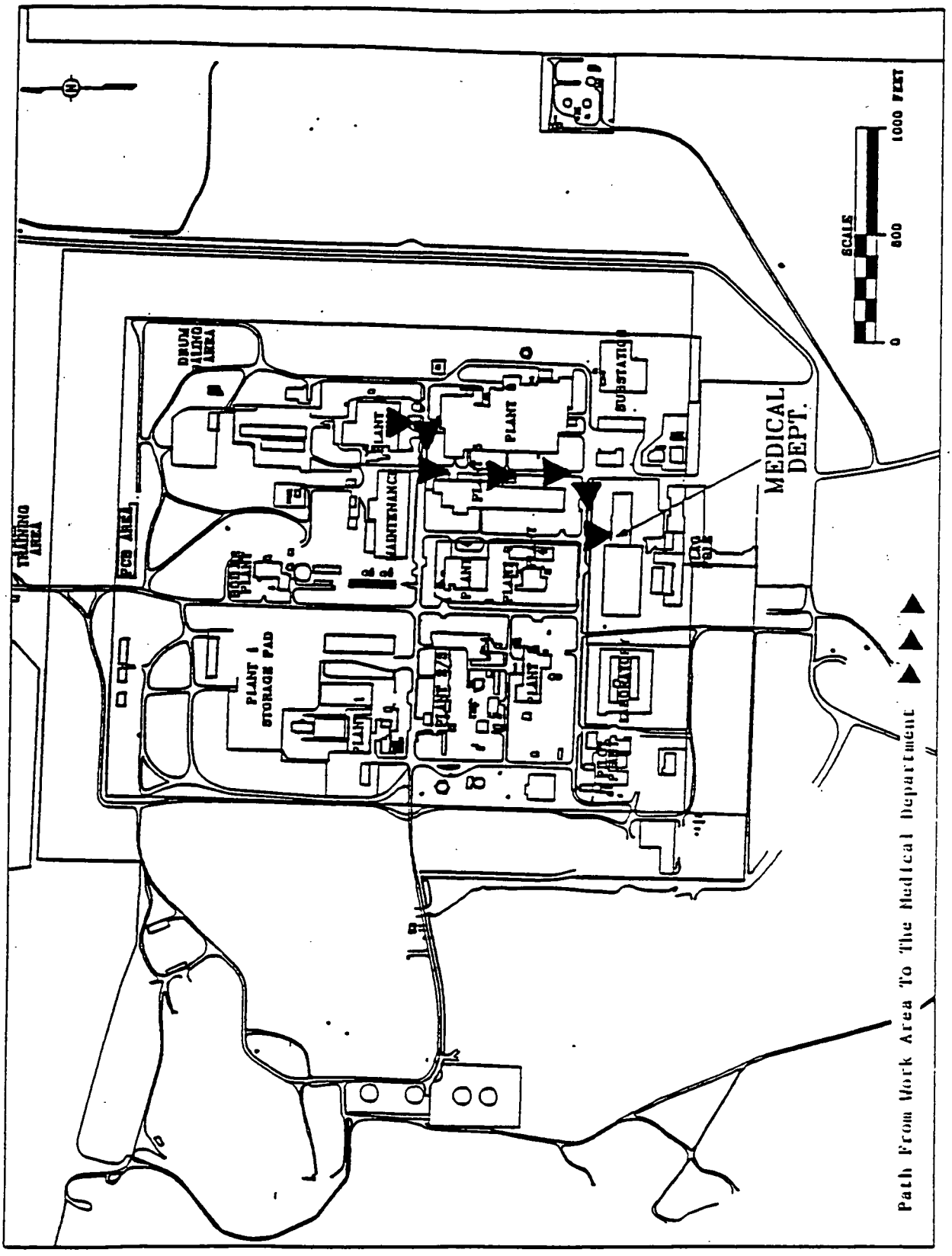

Figure 12-2 - Location of FEMP Medical Department Facility

12.9.2 Emergency Telephone Numbers

			Radio Frequency
EMERGENCY RESPONSE	x6511	Control	
Industrial Hygiene	x6207	357	F2
Radiation Safety	x6889	355	F2
Fire and Safety	x6235	303	F2
Assistant Emergency Duty Officer	x6431 or x6295	202	F2
Ambulance	x6511		
Hospital	x6511		
Fire	x6511		

SECTION 13

CONFINED SPACE ENTRY

A Confined Space Entry permit may be required for the activities associated with the bench-scale treatability study for the MAWS. Entry into vitrification unit would constitute a confined space entry. This could occur for maintenance of the refractory brick, cleaning of the internal chamber, or removal of duds.

If a confined space entry permit is needed the GTS Duratek Field Supervisor shall notify the WEMCO Facility Owner and IH personnel in addition to initiating and completing a FMPC Work Permit and request for a Confined Space Entry Permit for any entry into a confined space. The Facility Owner will ensure that the confined space requiring entry if properly prepared, labeled, and in a safe condition before authorized personnel enter. The IH representative shall conduct air quality testing inside the confined space in order to specify precautions or proper PPE requirements, ensures that the FMPC Work Permit has been filled out and signed by the Facility Owner and the GTS Duratek Supervisor when a confined space entry permit is requested, and issues the confined space entry permits.

All site personnel involved in a confined space entry shall be familiar with the hazards associated with confined space entries and have attended the necessary training. The completion of this training shall be documented by the site training personnel. No site personnel shall be allowed to enter a confined space until all permits are properly completed, signed, atmospheric testing conducted, and permission has been given by all responsible parties.

All confined space entries shall be in accordance with WEMCO Industrial Hygiene and Safety Manual Procedure IH&S-IH-05, Revision 0 (February 13, 1989), "Control of Entering and/or Working in a Confined Space" and WEMCO Procedure FMPC-516, Revision 2 (April 23, 1991), "Control of Permits for Accomplishing Hazardous Work." Attachment D contains a copy of a FMPC Work Permit/Confined Space Entry Permit.

SECTION 14

APPROVAL AND COMPLIANCE STATEMENT

14.1 Provisions

This task-specific Health and Safety Plan was produced for the FEMP and addresses health and safety aspects of all work related to the bench-scale treatability study for the Minimum Additive Waste Stabilization. Personnel who perform the tasks listed in Subsections 1.1 through 1.11 must read, understand, and agree to abide by the procedures and requirements set forth in both this Health and Safety Plan and any subsequent amendments. Site workers are required to sign the attached approval and compliance Health and Safety Plan Acknowledgement Form, Figure 14-1.

14.2 Amendments to Plan

This Health and Safety Plan is based on information available at the time of preparation. Unexpected conditions may arise which require reassessment of safety procedures. Unplanned activities and/or changes in the hazard status shall require a review of, and may result in changes to, this plan. Changes in the anticipated hazard status or unplanned activities are to be recorded as an amendment to this plan. Amendments must be approved by the plan author, Engineering Department Manager, and WEMCO IRS&T must be notified in writing of plan amendments.

Compliance with the provisions of this Health and Safety Plan may be audited through announced or unannounced site visits. All provisions of this Health and Safety Plan are to be implemented. Reasons for field actions/changes, when they are necessary, should be fully documented.

HEALTH AND SAFETY PLAN ACKNOWLEDGEMENT FORM

I have been informed and understand and will abide by the procedures set forth in the Health and Safety Plan and Amendments for the OU-1 Bench-Scale Treatability Study for the Minimum Additive Waste Stabilization at the FEMP site.

Printed Name	Signature	Representing	Date

Figure 14-1 - Health and Safety Plan Acknowledgement Form

SECTION 15

REFERENCES

(CFR 1991) Code of Federal Regulations, July 1, 1991. 29 CFR, Part 1910.120.

(CFR 1991) ——, July 1, 1991. 49 CFR, Parts 171-178.

(CFR 1991) ——, July 1, 1991. 40 CFR, Parts 264-265 and 300.

(DOE 1989) United States Department of Energy, July 20, 1989. DOE Order 5480.11, *"Radiation Protection for Occupational Workers."*

(DOE 1991) ——, November 27, 1991. *FEMP Emergency Plan (PL-3105)*. Fernald, Ohio: Fernald Environmental Management Project.

(GTS Duratek 1992) GTS Duratek, September 1992. *Input for MAWS Work Plan*.

(WEMCO 1989) Westinghouse Environmental Management Company of Ohio, February 13, 1989. *Control of Entering and/or Working in a Confined Space (IH&S-IH-05), Revision 0*. Fernald, Ohio: FEMP.

(WEMCO 1989) ——, March 30, 1989. *Procedure for Personnel Decontamination (SP-P-35-017), Revision 0*. Fernald, Ohio: FEMP.

(WEMCO 1990) ——, June 1990. *FEMP Site Health and Safety Plan*.

(WEMCO 1991) ——, April 23, 1991. *Control of Permits for Accomplishing Hazardous Work (FMPC-516), Revision 2*. Fernald, Ohio: FEMP.

(WEMCO 1991) ——, June 28, 1992. *Unrestricted Release of Materials (SP-P-35-029), Revision 0*. Fernald, Ohio: FEMP.

(WEMCO 1992) ——, May 13, 1992. *Radiological Controls Requirements Manual (RM-0009), Fernald Environmental Management Project*.

(Weston 1987) Weston, Roy F., Inc., 1987. *Characterization Investigation Study*. West Chester, Pennsylvania: Weston (FMPC/SUB-008, Vol 2).

ATTACHMENT A

INCIDENT INVESTIGATION REPORT

FMPC

ENVIRONMENT, SAFETY AND HEALTH DEPARTMENT

INCIDENT INVESTIGATION REPORT

This Section to be Completed by Employee

NAME: | BADGE: | JOB CLASSIFICATION:

PLANT/AREA: | JOB WORKED: | SHIFT WORKED:

INITIAL SAMPLE BOTTLE NUMBER: | SUPERVISOR'S NAME:

LOCATION OF INCIDENT: | DATE OF INCIDENT: | TIME OF INCIDENT:

MATERIALS INVOLVED IN INCIDENT:

DESCRIPTION OF INCIDENT:

HOW LONG EMPLOYEE INVOLVED IN INCIDENT: | DISTANCE AND DIRECTION FROM INCIDENT:

HOW POTENTIALLY EXPOSED: ☐ Inhalation ☐ Swallowing ☐ Skin Absorption

RESPIRATOR USED: ☐ Yes ☐ No | IF USED, HOW LONG?

IF USED, INDICATE TYPE:
☐ Half-Mask Air-Purifying ☐ Half-Mask Airline ☐ Self-Contained Breathing Apparatus (SCBA)
☐ Full-Face Air-Purifying ☐ Hooded Airline ☐ SCBA Inside Acid Suit
☐ Emergency Life Support Apparatus (ELSA)

CARTRIDGE COLOR IF AIR-PURIFYING RESPIRATOR USED: ☐ Purple ☐ Purple + Yellow ☐ Yellow ☐ Green ☐ Black

OTHER PROTECTIVE EQUIPMENT: ☐ Leather-Palm Gloves ☐ Rubber Gloves ☐ Chemical Goggles ☐ Rubber Suits/Aprons

HAVE YOU TAKEN ANY MEDICATIONS IN THE LAST 24 HOURS? IF YES, LIST DRUGS: ☐ Yes ☐ No

MEDICAL COMPLAINTS POSSIBLY RELATED TO INCIDENT:

Employee's Signature: _____ Date: _____

This Section to be Completed by Bio Assay

SAMPLE NUMBER	SAMPLE DATE	SAMPLE TIME (Military)	SAMPLE TYPE	URANIUM (mgU/L)	FLUORIDE (ugF/mL)	Sp. Gr.	OTHER? _____	CASTS	PROTEIN (mg/dL)

COMMENTS:

FMPC-ES&H-1458 (REV. 5/8/88)

Investigated by _____ Date _____

ATTACHMENT B

GUIDANCE FOR HEAT STRESS MONITORING AND PREVENTION

Heat Stress and Other Physiological Factors

Wearing PPE puts a hazardous waste worker at considerable risk of developing heat stress. This can result in health effects ranging from transient heat fatigue to serious illness or death. Heat stress is caused by a number of interacting factors, including environmental conditions, clothing, workload, and the individual characteristics of the worker. Because heat stress is probably one of the most common (and potentially serious) illnesses at hazardous waste sites, regular monitoring and other preventive precautions are vital.

Individuals vary in their susceptibility to heat stress. Factors that may predispose someone to heat stress include:

- Lack of physical fitness.
- Lack of acclimatization.
- Age.
- Dehydration.
- Obesity.
- Alcohol and drug use.
- Infection.
- Sunburn.
- Diarrhea.
- Chronic disease.

Reduced work tolerance and the increased risk of excessive heat stress is directly influenced by the amount and type of PPE worn. PPE adds weight and bulk, severely reduces the body's access to normal heat exchange mechanisms (evaporation, convection, and radiation), and increases energy expenditure. Therefore, when selecting PPE, each item's benefit should be carefully evaluated in relation to its potential for increasing the risk of heat stress. Once PPE is selected, the safe duration of work/rest periods should be determined based on the:

- Anticipated work rate.
- Ambient temperature and other environmental factors.
- Type of protective ensemble.
- Individual worker characteristics and fitness.

Monitoring

Because the incidence of heat stress depends on a variety of factors, all workers, even those not wearing protective equipment, should be monitored.

- For workers wearing permeable clothing (e.g., standard cotton or synthetic work clothes), follow recommendations for monitoring requirements and suggested work/rest schedules in the current American Conference of Governmental Industrial Hygienists' (ACGIH) Threshold Limit Values for Heat Stress [11]. If the actual clothing worn differs from the ACGIH standard ensemble in insulation value and/or wind and vapor permeability, change the monitoring requirements and work/rest schedules accordingly [12].

Source:
NIOSH/OSHA/USCG/EPA Occupational Safety And Health Guidance Manual for Hazardous Waste Site Activities, October 1985.

- For workers wearing semipermeable or impermeable[1] encapsulating ensembles, the ACGIH standard cannot be used. For these situations, workers should be monitored when the temperature in the work area is above 70 °F (21 °C) [6].

To monitor the worker, measure:

- Heart rate. Count the radial pulse during a 30-second period as early as possible in the rest period.

  If the heart rate exceeds 110 beats per minute at the beginning of the rest period, shorten the next work cycle by one-third and keep the rest period the same.

  If the heart rate still exceeds 110 beats per minute at the next rest period, shorten the following work cycle by one-third [12].

- Oral temperature. Use a clinical thermometer (3 minutes under the tongue) or similar device to measure the oral temperature at the end of the work period (before drinking).

  If oral temperature exceeds 99.6 °F (37.6 °C), shorten the next work cycle by one-third without changing the rest period.

  If oral temperature still exceeds 99.6 °F (37.6 °C) at the beginning of the next rest period, shorten the following work cycle by one-third [12].

  Do *not* permit a worker to wear a semipermeable or impermeable garment when his/her oral temperature exceeds 100.6 °F (38.1 °C)[12].

- Body water loss, if possible. Measure weight on a scale accurate to ±0.25 lb at the beginning and end of each work day to see if enough fluids are being taken to prevent dehydration. Weights should be taken while the employee wears similar clothing or, ideally, is nude. *The body water loss should not exceed 1.5 percent total body weight loss in a work day* [12].

Initially, the frequency of physiological monitoring depends on the air temperature adjusted for solar radiation and the level of physical work (see Table 8-10). The length of the work cycle will be governed by the frequency of the required physiological monitoring.

Prevention

Proper training and preventive measures will help avert serious illness and loss of work productivity. Preventing heat stress is particularly important because once someone suffers from heat stroke or heat exhaustion, that person may be predisposed to additional heat injuries. To avoid heat stress, management should take the following steps:

- Adjust work schedules:

  Modify work/rest schedules according to monitoring requirements.

  Mandate work slowdowns as needed.

  Rotate personnel: alternate job functions to minimize overstress or overexertion at one task.

  Add additional personnel to work teams.

  Perform work during cooler hours of the day if possible or at night if adequate lighting can be provided.

- Provide shelter (air-conditioned, if possible) or shaded areas to protect personnel during rest periods.

- Maintain workers' body fluids at normal levels. This is necessary to ensure that the cardiovascular system functions adequately. Daily fluid intake must approximately equal the amount of water lost in sweat, i.e., 8 fluid ounces (0.23 liters) of water must be ingested for approximately every 8 ounces (0.23 kg) of weight lost. The normal thirst mechanism is not sensitive enough to ensure that enough water will be drunk to replace lost sweat [14]. When heavy sweating occurs, encourage the worker to drink more. The following strategies may be useful:

  Maintain water temperature at 50 ° to 60 °F (10 ° to 15.6 °C).

  Provide small disposable cups that hold about 4 ounces (0.1 liter).

  Have workers drink 16 ounces (0.5 liters) of fluid (preferably water or dilute drinks) before beginning work.

  Urge workers to drink a cup or two every 15 to 20 minutes, or at each monitoring break. A total of 1 to 1.6 gallons (4 to 6 liters) of fluid per day are recommended, but more may be necessary to maintain body weight.

  Weigh workers before and after work to determine if fluid replacement is adequate.

- Encourage workers to maintain an optimal level of physical fitness:

  Where indicated, acclimatize workers to site work conditions: temperature, protective clothing, and workload (see *Level of Acclimatization* at the end of this chapter).

  Urge workers to maintain normal weight levels.

- Provide cooling devices to aid natural body heat exchange during prolonged work or severe heat exposure. Cooling devices include:

  Field showers or hose-down areas to reduce body temperature and/or to cool off protective clothing.

  Cooling jackets, vests, or suits (see Table 3-5 for details).

- Train workers to recognize and treat heat stress. As part of training, identify the signs and symptoms of heat stress (see Table 3-11).

Other Factors

PPE decreases worker performance as compared to an unequipped individual. The magnitude of this effect varies considerably, depending on both the individual and the PPE ensemble used. This section discusses the demonstrated physiological responses to PPE, the individual human characteristics that play a factor in these

[1] Although no protective ensemble is "completely" impermeable, for practical purposes an outfit may be considered impermeable when calculating heat stress risk.

Table 8-10. Suggested Frequency of Physiological Monitoring for Fit and Acclimatized Workers[a]

ADJUSTED TEMPERATURE[b]	NORMAL WORK ENSEMBLE[c]	IMPERMEABLE ENSEMBLE
90°F (32.2°C) or above	After each 45 minutes of work	After each 15 minutes of work
87.5° - 90°F (30.8° - 32.2°C)	After each 60 minutes of work	After each 30 minutes of work
82.5° - 87.5°F (28.1° - 30.8°C)	After each 90 minutes of work	After each 60 minutes of work
77.5° - 82.5°F (25.3° - 28.1°C)	After each 120 minutes of work	After each 90 minutes of work
72.5° - 77.5°F (22.5° - 25.3°C)	After each 150 minutes of work	After each 120 minutes of work

Source: Reference (13).

[a]For work levels of 250 kilocalories/hour.

[b]Calculate the adjusted air temperature (ta adj) by using this equation: ta adj °F = ta °F + (13 x % sunshine). Measure air temperature (ta) with a standard mercury-in-glass thermometer, with the bulb shielded from radiant heat. Estimate percent sunshine by judging what percent time the sun is not covered by clouds that are thick enough to produce a shadow. (100 percent sunshine = no cloud cover and a sharp, distinct shadow; 0 percent sunshine = no shadows.)

[c]A normal work ensemble consists of cotton coveralls or other cotton clothing with long sleeves and pants.

Table 8-11. Signs and Symptoms of Heat Stress[a]

- Heat rash may result from continuous exposure to heat or humid air.
- Heat cramps are caused by heavy sweating with inadequate electrolyte replacement. Signs and symptoms include:
  - muscle spasms
  - pain in the hands, feet, and abdomen
- Heat exhaustion occurs from increased stress on various body organs including inadequate blood circulation due to cardiovascular insufficiency or dehydration. Signs and symptoms include:
  - pale, cool, moist skin
  - heavy sweating
  - dizziness
  - nausea
  - fainting
- Heat stroke is the most serious form of heat stress. Temperature regulation fails and the body temperature rises to critical levels. Immediate action must be taken to cool the body before serious injury and death occur. Competent medical help must be obtained. Signs and symptoms are:
  - red, hot, usually dry skin
  - lack of or reduced perspiration
  - nausea
  - dizziness and confusion
  - strong, rapid pulse
  - coma

[a]Source: Reference (8).

responses, and some of the precautionary and training measures that need to be taken to avoid PPE-induced injury.

The physiological factors may affect worker ability to function using PPE include:

- Physical condition.
- Level of acclimatization.
- Age.
- Gender.
- Weight.

Physical Condition

Physical fitness is a major factor influencing a person's ability to perform work under heat stress. The more fit someone is, the more work they can safely perform. At a given level of work, a fit person, relative to an unfit person, will have (5,8,15,16):

- Less physiological strain.
- A lower heart rate.
- A lower body temperature, which indicates less retained body heat (a rise in internal temperature precipitates heat injury).
- A more efficient sweating mechanism.
- Slightly lower oxygen consumption.
- Slightly lower carbon dioxide production.

Level of Acclimatization

The degree to which a worker's body has physiologically adjusted or acclimatized to working under hot conditions affects his or her ability to do work. Acclimatized individuals generally have lower heart rates and body temperatures than unacclimatized individuals (17), and sweat sooner and more profusely. This enables them to maintain lower skin and body temperatures at a given level of environmental heat and work loads than unacclimatized workers (18). Sweat composition also becomes more dilute with acclimatization, which reduces salt loss (8).

Acclimatization can occur after just a few days of exposure to a hot environment [15,16]. NIOSH recommends a progressive 6-day acclimatization period for the unacclimatized worker before allowing him/her to do full work on a hot job [16]. Under this regimen, the first day of work on site is begun using only 50 percent of the anticipated workload and exposure time, and 10 percent is added each day through day 6 [16]. With fit or trained individuals, the acclimatization period may be shortened 2 or 3 days. However, workers can lose acclimatization in a matter of days, and work regimens should be adjusted to account for this.

When enclosed in an impermeable suit, fit acclimatized individuals sweat more profusely than unfit or unacclimatized individuals and may therefore actually face a greater danger of heat exhaustion due to rapid dehydration. This can be prevented by consuming adequate quantities of water. See previous section on *Prevention* for additional information.

Age

Generally, maximum work capacity declines with increasing age, but this is not always the case. Active, well-conditioned seniors often have performance capabilities equal to or greater than young sedentary individuals. However, there is some evidence, indicated by lower sweat rates and higher body core temperatures, that older individuals are less effective in compensating for a given level of environmental heat and work loads [19]. At moderate thermal loads, however, the physiological responses of "young" and "old" are similar and performance is not affected [19].

Age should not be the sole criterion for judging whether or not an individual should be subjected to moderate heat stress. Fitness level is a more important factor.

Gender

The literature indicates that females tolerate heat stress at least as well as their male counterparts [20]. Generally, a female's work capacity averages 10 to 30 percent less than that of a male [8]. The primary reasons for this are the greater oxygen-carrying capacity and the stronger heart in the male [19]. However, a similar situation exists as with aging: not all males have greater work capacities than all females.

Weight

The ability of a body to dissipate heat depends on the ratio of its surface area to its mass (surface area/weight). Heat loss (dissipation) is a function of surface area and heat production is dependent on mass. Therefore, heat balance is described by the ratio of the two.

Since overweight individuals (those with a low ratio) produce more heat per unit of surface area than thin individuals (those with a high ratio), overweight individuals should be given special consideration in heat stress situations. However, when wearing impermeable clothing, the weight of an individual is not a critical factor in determining the ability to dissipate excess heat.

ATTACHMENT C

GUIDANCE FOR COLD STRESS MONITORING AND PREVENTION

COLD STRESS

The cold stress TLVs are intended to protect workers from the severest effects of cold stress (hypothermia) and cold injury and to describe exposures to cold working conditions under which it is believed that nearly all workers can be repeatedly exposed without adverse health effects. The TLV objective is to prevent the deep body temperature from falling below 36°C (96.8°F) and to prevent cold injury to body extremities (deep body temperature is the core temperature of the body determined by conventional methods for rectal temperature measurements). For a single, occasional exposure to a cold environment, a drop in core temperature to no lower that 35°C (95°F) should be permitted. In addition to provisions for total body protection, the TLV objective is to protect all parts of the body with emphasis on hands, feet, and head from cold injury.

Introduction

Fatal exposures to cold among workers have almost always resulted from accidental exposures involving failure to escape from low environmental air temperatures or from immersion in low temperature water. The single most important aspect of life-threatening hypothermia is the fall in the deep core temperature of the body. The clinical presentations of victims of hypothermia are shown in Table 1. Workers should be protected from exposure to cold so that the deep core temperature does not fall below 36°C (96.8°F); lower body temperatures will very likely result in reduced mental alertness, reduction in rational decision making, or loss of consciousness with the threat of fatal consequences.

Pain in the extremities may be the first early warning of danger to cold stress. During exposure to cold, maximum severe shivering develops when the body temperature has fallen to 35°C (95°F). This must be taken as a sign of danger to the workers and exposure to cold should be immediately terminated for any workers when severe shivering becomes evident. Useful physical or mental work is limited when severe shivering occurs.

Since prolonged exposure to cold air, or to immersion in cold water, at temperatures well above freezing can lead to dangerous hypothermia, whole body protection must be provided.

1. Adequate insulating dry clothing to maintain core temperatures above 36°C (96.8°F) must be provided to workers if work is performed in air temperatures below 4°C (40°F). Wind chill cooling rate and the cooling power of air are critical factors. [Wind chill cooling rate is defined as heat loss from a body expressed in watts per meter squared which is a function of the air temperature and wind velocity upon the exposed body.] The higher the wind speed and the lower the temperature in the work area, the greater the insulation value of the protective clothing required. An equivalent chill temperature chart relating the actual dry bulb air temperature and the wind ve-

TABLE 1. Progressive Clinical Presentations of Hypothermia*

Core Temperature °C	Core Temperature °F	Clinical Signs
37.6	99.6	"Normal" rectal temperature
37	98.6	"Normal" oral temperature
36	96.8	Metabolic rate increases in an attempt to compensate for heat loss
35	95.0	Maximum shivering
34	93.2	Victim conscious and responsive, with normal blood pressure
33	91.4	Severe hypothermia below this temperature
32	89.6	Consciousness clouded; blood pressure becomes difficult to obtain; pupils dilated but react to light; shivering ceases
31	87.8	
30	86.0	Progressive loss of consciousness; muscular rigidity increases; pulse and blood pressure difficult to obtain; respiratory rate decreases
29	84.2	
28	82.4	Ventricular fibrillation possible with myocardial irritability
27	80.6	Voluntary motion ceases; pupils nonreactive to light; deep tendon and superficial reflexes absent
26	78.8	Victim seldom conscious
25	77.0	Ventricular fibrillation may occur spontaneously
24	75.2	Pulmonary edema
22	71.6	Maximum risk of ventricular fibrillation
21	69.8	
20	68.0	Cardiac standstill
18	64.4	Lowest accidental hypothermia victim to recover
17	62.6	Isoelectric electroencephalogram
9	48.2	Lowest artificially cooled hypothermia patient to recover

* Presentations approximately related to core temperature. Reprinted from the January 1982 issue of *American Family Physician*, published by the American Academy of Family Physicians.

Source: American Conference of Governmental Industrial Hygienists, "1990-1991 Threshold Limit Values for Chemical Substances and Physical Agents and Biological Exposure Indices," 1990. Reproduced with permission.

locity is presented in Table 2. The equivalent chill temperature should be used when estimating the combined cooling effect of wind and low air temperatures on exposed skin or when determining clothing insulation requirements to maintain the deep body core temperature.

2. Unless there are unusual or extenuating circumstances, cold injury to other than hands, feet, and head is not likely to occur without the development of the initial signs of hypothermia. Older workers or workers with circulatory problems require special precautionary protection against cold injury. The use of extra insulating clothing and/or a reduction in the duration of the exposure period are among the special precautions which should be considered. The precautionary actions to be taken will depend upon the physical condition of the worker and should be determined with the advice of a physician with knowledge of the cold stress factors and the medical condition of the worker.

Evaluation and Control

For exposed skin, continuous exposure should not be permitted when the air speed and temperature results in an equivalent chill temperature of −32°C (25.6°F). Superficial or deep local tissue freezing will occur only at temperatures below −1°C (30.2°F) regardless of wind speed.

At air temperatures of 2°C (35.6°F) or less, it is imperative that workers who become immersed in water or whose clothing becomes wet be immediately provided a change of clothing and be treated for hypothermia.

Recommended limits for properly clothed workers for periods of work at temperatures below freezing are shown in Table 3.

Special protection of the hands is required to maintain manual dexterity for the prevention of accidents:

1. If fine work is to be performed with bare hands for more than 10–20 minutes in an environment below 16°C (60.8°F), special provisions should be established for keeping the workers' hands warm. For this purpose, warm air jets, radiant heaters (fuel burner or electric radiator), or contact warm plates may be utilized. Metal handles of tools and control bars should be covered by thermal insulating material at temperatures below −1°C (30.2°F).
2. If the air temperature falls below 16°C (60.8°F) for sedentary, 4°C (39.2°F) for light, −7°C (19.4°F) for moderate work and fine manual dexterity is not required, then gloves should be used by the workers.

To prevent contact frostbite, the workers should wear anti-contact gloves.

1. When cold surfaces below −7°C (19.4°F) are within reach, a warning should be given to each worker by the supervisor to prevent inadvertent contact by bare skin.

TABLE 2. Cooling Power of Wind on Exposed Flesh Expressed as Equivalent Temperature (under calm conditions)*

Estimated Wind Speed (in mph)	Actual Temperature Reading (°F)										
	50	40	30	20	10	0	−10	−20	−30	−40	−50	−60
	Equivalent Chill Temperature (°F)											
calm	50	40	30	20	10	0	−10	−20	−30	−40	−50	−60
5	48	37	27	16	6	−5	−15	−26	−36	−47	−57	−68
10	40	28	16	4	−9	−21	−33	−46	−58	−70	−83	−95
15	36	22	9	−5	−18	−32	−45	−58	−72	−85	−99	−112
20	32	18	4	−10	−25	−39	−53	−67	−82	−96	−110	−124
25	30	16	0	−15	−29	−44	−59	−74	−88	−104	−118	−133
30	28	13	−2	−18	−33	−48	−63	−79	−94	−109	−125	−140
35	27	11	−4	−20	−35	−51	−67	−82	−98	−113	−129	−145
40	26	10	−6	−21	−37	−53	−69	−85	−101	−116	−132	−148
(Wind speeds greater than 40 mph have little additional effect.)	LITTLE DANGER In < hr with dry skin. Maximum danger of false sense of security.					INCREASING DANGER Danger from freezing of exposed flesh within one minute.				GREAT DANGER Flesh may freeze within 30 seconds.		

* Trenchfoot and immersion foot may occur at any point on this chart.

TABLE 3. Threshold Limit Values Work/Warm-up Schedule for Four-Hour Shift*

Air Temperature – Sunny Sky		No Noticeable Wind		5 mph Wind		10 mph Wind		15 mph Wind		20 mph Wind	
°C (approx.)	°F (approx.)	Max. Work Period	No. of Breaks	Max. Work Period	No. of Breaks	Max. Work Period	No. of Breaks	Max. Work Period	No. of Breaks	Max. Work Period	No. of Breaks
-26° to -28°	-15° to -19°	(Norm. Breaks)	1	(Norm. Breaks)	1	75 min	2	55 min	3	40 min	4
-29° to -31°	-20° to -24°	(Norm. Breaks)	1	75min	2	55 min	3	40 min	4	30 min	5
-32° to -34°	-25° to -29°	75 min	2	55 min	3	40 min	4	30 min	5	Non-emergency work should cease	
-35° to -37°	-30° to -34°	55 min	3	40 min	4	30 min	5	Non-emergency work should cease			
-38° to -39°	-35° to -39°	40 min	4	30 min	5	Non-emergency work should cease					
-40° to -42°	-40° to -44°	30 min	5	Non-emergency work should cease							
-43° & below	-45° & below	Non-emergency work should cease									

Notes for Table 3:

1. Schedule applies to moderate to heavy work activity with warm-up breaks of ten (10) minutes in a warm location. For Light- to Moderate Work (limited physical movement): apply the schedule one step lower. For example, at -35°C (-30°F) with no noticeable wind (Step 4), a worker at a job with little physical movement should have a maximum work period of 40 minutes with 4 breaks in a 4-hour period (Step 5).
2. The following is suggested as a guide for estimating wind velocity if accurate information is not available: 5 mph: light flag moves; 10 mph: light flag fully extended; 15 mph: raises newspaper sheet; 20 mph: blowing and drifting snow.
3. If only the wind chill cooling rate is available, a rough rule of thumb for applying it rather than the temperature and wind velocity factors given above would be: 1) special warm-up breaks should be initiated at a wind chill cooling rate of about 1750 W/m²; 2) all non-emergency work should have ceased at or before a wind chill of 2250 W/m². In general the warm-up schedule provided above slightly under-compensates for the wind at the warmer temperatures, assuming acclimatization and clothing appropriate for winter work. On the other hand, the chart slightly over-compensates for the actual temperatures in the colder ranges, since windy conditions rarely prevail at extremely low temperatures.
4. TLVs apply only for workers in dry clothing.

* Adapted from Occupational Health & Safety Division, Saskatchewan Department of Labour

2. If the air temperature is −17.5°C (0°F) or less, the hands should be protected by mittens. Machine controls and tools for use in cold conditions should be designed so that they can be handled without removing the mittens.

Provisions for additional total body protection are required if work is performed in an environment at or below 4°C (39.2°F). The workers should wear cold protective clothing appropriate for the level of cold and physical activity:

1. If the air velocity at the job site is increased by wind, draft, or artificial ventilating equipment, the cooling effect of the wind should be reduced by shielding the work area or by wearing an easily removable windbreak garment.
2. If only light work is involved and if the clothing on the worker may become wet on the job site, the outer layer of the clothing in use may be of a type impermeable to water. With more severe work under such conditions, the outer layer should be water repellent, and the outerwear should be changed as it becomes wetted. The outer garments should include provisions for easy ventilation in order to prevent wetting of inner layers by sweat. If work is done at normal temperatures or in a hot environment before entering the cold area, the employee should make sure that clothing is not wet as a consequence of sweating. If clothing is wet, the employee should change into dry clothes before entering the cold area. The workers should change socks and any removable felt insoles at regular daily intervals or use vapor barrier boots. The optimal frequency of change should be determined empirically and will vary individually and according to the type of shoe worn and how much the individual's feet sweat.
3. If exposed areas of the body cannot be protected sufficiently to prevent sensation of excessive cold or frostbite, protective items should be supplied in auxiliary heated versions.
4. If the available clothing does not give adequate protection to prevent hypothermia or frostbite, work should be modified or suspended until adequate clothing is made available or until weather conditions improve.
5. Workers handling evaporative liquid (gasoline, alcohol or cleaning fluids) at air temperatures below 4°C (39.2°F) should take special precautions to avoid soaking of clothing or gloves with the liquids because of the added danger of cold injury due to evaporative cooling. Special note should be taken of the particularly acute effects of splashes of "cryogenic fluids" or those liquids with a boiling point that is just above ambient temperature.

Work–Warming Regimen

If work is performed continuously in the cold at an equivalent chill temperature (ECT) or below −7°C (19.4°F), heated warming shelters (tents, cabins, rest rooms, etc.) should be made available nearby. The workers should be encouraged to use these

shelters at regular intervals, the frequency depending on the severity of the environmental exposure. The onset of heavy shivering, frostnip, the feeling of excessive fatigue, drowsiness, irritability, or euphoria are indications for immediate return to the shelter. When entering the heated shelter, the outer layer of clothing should be removed and the remainder of the clothing loosened to permit sweat evaporation or a change of dry work clothing provided. A change of dry work clothing should be provided as necessary to prevent workers from returning to work with wet clothing. Dehydration, or the loss of body fluids, occurs insidiously in the cold environment and may increase the susceptibility of the worker to cold injury due to a significant change in blood flow to the extremities. Warm sweet drinks and soups should be provided at the work site to provide caloric intake and fluid volume. The intake of coffee should be limited because of the diuretic and circulatory effects.

For work practices at or below −12°C (10.4°F) ECT, the following should apply:

1. The worker should be under constant protective observation (buddy system or supervision).
2. The work rate should not be so high as to cause heavy sweating that will result in wet clothing; if heavy work must be done, rest periods must be taken in heated shelters and opportunity for changing into dry clothing should be provided.
3. New employees should not be required to work fulltime in the cold during the first days of employment until they become accustomed to the working conditions and required protective clothing.
4. The weight and bulkiness of clothing should be included in estimating the required work performance and weights to be lifted by the worker.
5. The work should be arranged in such a way that sitting still or standing still for long periods is minimized. Unprotected metal chair seats should not be used. The worker should be protected from drafts to the greatest extent possible.
6. The workers should be instructed in safety and health procedures. The training program should include as a minimum instruction in:
   a. Proper rewarming procedures and appropriate first aid treatment.
   b. Proper clothing practices.
   c. Proper eating and drinking habits.
   d. Recognition of impending frostbite.
   e. Recognition of signs and symptoms of impending hypothermia or excessive cooling of the body even when shivering does not occur.
   f. Safe work practices.

Special Workplace Recommendations

Special design requirements for refrigerator rooms include the following:

1. In refrigerator rooms, the air velocity should be minimized as much as possible and should not exceed 1 meter/sec (200 fpm) at the job site. This can be achieved by properly designed air distribution systems.
2. Special wind protective clothing should be provided based upon existing air velocities to which workers are exposed.

Special caution should be exercised when working with toxic substances and when workers are exposed to vibration. Cold exposure may require reduced exposure limits.

Eye protection for workers employed out-of-doors in a snow and/or ice-covered terrain should be supplied. Special safety goggles to protect against ultraviolet light and glare (which can produce temporary conjunctivitis and/or temporary loss of vision) and blowing ice crystals should be required when there is an expanse of snow coverage causing a potential eye exposure hazard.

Workplace monitoring is required as follows:

1. Suitable thermometry should be arranged at any workplace where the environmental temperature is below 16°C (60.8°F) so that overall compliance with the requirements of the TLV can be maintained.
2. Whenever the air temperature at a workplace falls below −1°C (30.2°F), the dry bulb temperature should be measured and recorded at least every 4 hours.
3. In indoor workplaces, the wind speed should also be recorded at least every 4 hours whenever the rate of air movement exceeds 2 meters per second (5 mph).
4. In outdoor work situations, the wind speed should be measured and recorded together with the air temperature whenever the air temperature is below −1°C (30.2°F).
5. The equivalent chill temperature should be obtained from Table 2 in all cases where air movement measurements are required; it should be recorded with the other data whenever the equivalent chill temperature is below −7°C (19.4°F).

Employees should be excluded from work in cold at −1°C (30.2°F) or below if they are suffering from diseases or taking medication which interferes with normal body temperature regulation or reduces tolerance to work in cold environments. Workers who are routinely exposed to temperatures below −24°C (11.2°F) with wind speeds less than five miles per hour, or air temperatures below −18°C (0°F) with wind speeds above five miles per hour, should be medically certified as suitable for such exposures.

Trauma sustained in freezing or subzero conditions requires special attention because an injured worker is predisposed to cold injury. Special provisions should be made to prevent hypothermia and freezing of damaged tissues in addition to providing for first aid treatment.

ATTACHMENT D

FMPC WORK PERMIT/CONFINED SPACE ENTRY PERMIT

FMPC WORK PERMIT

This work permit is to be completed in accordance with FMPC-516.

Work Permit Number: 14

SECTION A - BACKGROUND INFORMATION *(To be completed by supervisor-in-charge)*

A. MAINTENANCE REQUEST NO.	B. STARTING DATE & TIME DATE: TIME:	C. EXPIRATION DATE & TIME DATE: TIME:
D. EXACT LOCATION:	E. EQUIPMENT	

F. EXACT DESCRIPTION OF WORK TO BE CONDUCTED

G. EMPLOYEE(S) ASSIGNED TO JOB: BADGE NO

H. SUPERVISOR(S)/WMCO PROJECT ENGINEER

SECTION B - TYPES OF PERMITS REQUIRED *(Checked by supervisor-in-charge)*

- ☐ ASBESTOS (Copy to be attched)
- ☐ RADIATION (Copy to be attached)
- ☐ CHEMICAL/HAZARDOUS MATERIAL
- ☐ CONFINED SPACE ENTRY
- ☐ OPEN FLAME/WELDING

SECTION C - GENERAL PRECAUTIONS

ITEM	YES	NO
1. Equipment cleaned and purged		
2. Nuclear Safety checks completed		
3. Lock & Tag Procedures required and followed		
4. Water in space has been collected and sampled		
5. Complete isolation of process lines to space has been completed		
6. All mechanical equipment to the space have been tagged, disconnected and/or blocked		
7. Electrical isolation complete for Lock & Tag Procedure		
8. All lines within space have been cleaned and purged		

Equipment is safe and ready for work (FACILITY OWNER'S SIGNATURE):

BADGE NO.: DATE: TIME:

SECTION D - PERSONAL PROTECTIVE EQUIPMENT REQUIRED

EQUIPMENT	YES	NO	SPECIFY
Face Shield			
Hearing Protection			
Eye Protection			
Acid Splash Suit			
Gloves			
Respiratory Protection *(consult with IH rep.)*			
Flame Retardent Clothing			
Disposable Hood, Coveralls and Shoe Covers worn over Company-issued Clothing			

OTHER PROTECTION REQUIREMENTS:

SUPERVISOR-IN-CHARGE SIGNATURE: BADGE NO.: DATE:

SECTION E - CHEMICAL/HAZARDOUS MATERIAL PERMIT

TYPE OF MATERIAL: NAME OF MATERIAL(S):

PRECAUTION TAKEN	YES	NO	DNA
1. Equipment and/or lines have been drained, flushed, purged, or neutralized			
2. Valves have been closed and locked (when feasible) and danger tagged			
3. Area isolated			
4. Safety shower is operable close to worksite			
5. Special clothing or other protective equipment required			

6. Special precautions:

FACILITY OWNER'S SIGNATURE: BADGE NO.: DATE:

NO.	DISTRIBUTION OF COPIES
1	POST AT JOB
2	SUPERVISOR-IN-CHARGE
3	IH&S *(RECORD COPY)*

SECTION F - CONFINED SPACE ENTRY PERMIT *(Valid for no more than 12 hours)*

ATMOSPHERIC GAS TESTING RESULTS

OXYGEN CONTENT		COMBUSTIBLE GAS		TOXICITY	
TIME	READINGS	TIME	READINGS	TIME	READINGS

PRECAUTIONS TAKEN/NEEDED	YES	NO	DNA
1. Forced ventilation required			
2. Work requires staging or ladder			
3. Ground Fault Interupting protection required			
4. Adequate/proper illumination required			
5. Standby notified what action to take			
6. Safety line and harness required			
7. Nonsparking tools required			
8. Periodic gas testing required			

STANDBY-WORKER COMMUNICATION:

SPECIAL INSTRUCTIONS:

TYPE OF CONFINED SPACE: ☐ CLASS A ☐ CLASS B ☐ CLASS C

IH&S REPRESENTATIVE SIGNATURE: BADGE NO.:

PERMIT ISSUED DATE: TIME:

SECTION G - OPEN FLAME/WELDING PERMIT

PRECAUTIONS VERIFIED *(within 35 feet of work)*	YES	NO	DNA
1. Combustibles, magnesium and uranium have been removed, covered or shielded.			
2. Flammable liquids have been removed or isolated.			
3. Wall and floor openings are covered or protected.			
4. A flame retardent tarp has been suspended underneath work.			
5. A combustible gas check has been made.			
6. (work on walls/ceilings) All combustibles have been removed from opposite sides.			
7. A Fire Watch will be required and will remain posted during breaks and for 30 minutes after work is completed.			
8. Fire Watch is supplied with an extinguisher and know-how to activate the nearest fire alarm.			
9. Fire & Safety Inspector shall be present during the burning operation.			
10. Fire & Safety Inspector shall be present to monitor when the system is initially opened.			

COMBUSTIBLE GAS TESTING RESULTS:

EQUIPMENT/AREA CHECKED:

SPECIAL INSTRUCTIONS/PRECAUTIONS:

FIRE & SAFETY INSPECTOR SIGNATURE: BADGE NO.:

PERMIT ISSUED DATE: TIME:

SECTION H - WORK AUTHORIZATION REVIEWED AND FOUND ACCEPTABLE FOR USE

SUPERVISOR-IN-CHARGE SIGNATURE: BADGE NO.: DATE:

FMPC-OS&H-2939 (8/12/88)