U-006-101.29

4443

PRELIMINARY ASSESSMENT OF ALTERNATIVES FOR PROCESSING AD DISPOSAL OF THE AFRIMET RESIDUES

05-15-81

BATTELLE/DOE
59
REPORT OU4

Battelle

Columbus Laboratories

4443

Report

PRELIMINARY ASSESSMENT OF ALTERNATIVES
FOR PROCESSING AND DISPOSAL OF THE
AFRIMET RESIDUES

prepared for

U.S. DEPARTMENT OF ENERGY
REMEDIAL ACTION PROGRAM

May 15, 1981

pg 2 # 4

BMI-2083
UC-11

4443

FINAL REPORT

on

PRELIMINARY ASSESSMENT OF ALTERNATIVES FOR PROCESSING AND DISPOSAL OF THE AFRIMET RESIDUES

prepared for

U.S. DEPARTMENT OF ENERGY
REMEDIAL ACTION PROGRAM

May 15, 1981

by

J. F. Dettorre, B. S. Ausmus, E. P. Stambaugh,
A. A. Lawrence, and K. R. Yates

BATTELLE
Columbus Laboratories
505 King Avenue
Columbus, Ohio 43201

under subcontract to
NATIONAL LEAD COMPANY OF OHIO, INC.
(Serial No.4071)

2

4443

TABLE OF CONTENTS

	Page
SUMMARY	1
INTRODUCTION	2
CHARACTERISTICS OF RESIDUES	3
Characterization of the K-65 Residues (Building 434, Fernald Silo)	3
Characterization of the L-30 Residues (Building 411)	7
Characterization of the L-50 Residues (Buildings 413-414)	9
Characterization of the F-32 Residues (Recarbonation Pit)	11
PRELIMINARY EVALUATION OF RESIDUE DISPOSAL/STORAGE ALTERNATIVES	11
Interim Storage Alternatives	12
Upgrading	12
Minimum Consolidation	13
Consolidation	13
Long-Term Storage/Disposal Options	13
Off-Site Shipment for Storage/Disposal	14
Vault Storage/Disposal On-Site	14
Immobilization	14
Preliminary Evaluation of Available Techniques	17
Vitrification	20
Residue Processing	24
Summary	25
DISCUSSION	25
REFERENCES	26

APPENDIX A

PRELIMINARY ALTERNATIVES FOR RESIDUE PROCESSING	A-1

3

LIST OF TABLES

		Page
Table 1.	Summary of the Afrimet Pitchblende Residues Stored at the DOE-Niagara Falls Storage Site and Fernald, OH. . .	2
Table 2.	Characteristics of the K-65 Residues Stored in Building 434 of the DOE-Niagara Falls Storage Site and at the FMPC, Fernald, OH.	6
Table 3.	Characteristics of the L-30 Residues Stored in Building 411 of the DOE-Niagara Falls Storage Site. . .	8
Table 4.	Characteristics of the L-50 Residues Stored at the DOE-Niagara Falls Storage Site.	10
Table 5.	Preliminary Evaluation of Several Immobilization/ Volume Reduction Techniques Using Several Criteria for Use in Storage/Disposal of Pitchblende Residues . .	18
Table 6.	Summary of the Chemical Composition of Solidified Iron Cake Residue and Ditch Sediments.	23
Table A-1.	Brine Leaching Studies.	A-9
Table A-2.	Metathesis Studies.	A-11
Table A-3.	Hydrochloric Acid Leaching.	A-13

LIST OF FIGURES

Figure 1.	Flowsheet of Processing of Rich Katangan Pitchblende Ores for U_3O_8 Extraction	5
Figure 2.	Resulting Solidified Product Made by Resistance Furnace Fusion of a Contaminated Ditch Sediment. . . .	21
Figure 3.	Resulting Solidified Product Made by Resistance Furnace Fusion of a Contaminated Soil Sample	22
Figure A-1.	The Prime Leach Step of the Hazen Process of Radium Extraction.	A-7
Figure A-2.	Radium Process Residue Treatment	A-16
Figure A-3.	Radium Process Separation by Fractional Precipitation— Radium Rich Side	A-17
Figure A-4.	Radium Process Separation by Fractional Precipitation— Barium Rich Side	A-18
Figure A-5.	Radium Process Waste Disposal.	A-19

LIST OF FIGURES
(Continued)

Page

Figure A-6. Conceptual Flowsheet for Brine Leach Process. A-24
Figure A-7. Conceptual Flowsheet for Nitric Acid Leach Process. . A-26
Figure A-8. Recycle of Metathesis Liquor. A-27
Figure A-9. NaOH Leach of Residue A-29

4443

FINAL REPORT

on

PRELIMINARY ASSESSMENT OF ALTERNATIVES FOR PROCESSING AND DISPOSAL OF THE AFRIMET RESIDUES

prepared for

U.S. DEPARTMENT OF ENERGY
REMEDIAL ACTION PROGRAM

from

BATTELLE
Columbus Laboratories

under subcontract to
NATIONAL LEAD COMPANY OF OHIO, INC.

May 15, 1981

SUMMARY

While the Niagara Falls Storage Site has not been used for processing, both this Site and facilities of the Feed Materials Production Center (FMPC) of NLO, Inc., were used for storage of residues from uranium extraction of African Metals Corporation's pitchblende ores. The objective of this report is to discuss the preliminary assessment of alternatives for processing and disposal of these residues. While a full engineering assessment was proposed, NLO requested that the project be terminated due to funding difficulties. The resulting report, therefore, is, at best, a preliminary assessment and is neither as inclusive nor as thorough as needs to be conducted. The report discusses processing and disposal/storage alternatives of the Afrimet residues (K-65, L-30, L-50 and F-32).

6

4443

INTRODUCTION

Although the Niagara Falls Storage Site (NFSS) has never been used for uranium extraction processes, it has been used for storage and trans-shipment of many radiological materials, residues, and contaminated wastes. The radioactive residues stored at the Site currently are primarily those generated in the processing of pitchblende concentrates from African ores by Mallinckrodt and Linde corporations during the early days of the atomic energy program. The residues contain unextracted uranium, decay products, and other metals of potential resource value. Residues belonging to Afrimet Corporation are stored in Buildings 411, 413, 414, 434, and the recarbonation pit at the Niagara Falls Storage Site and in two silos at the NLO facilities at Fernald, Ohio (Table 1). These residues are stored under the provisions of a lease from the U.S. DOE (then U.S. AEC) granted in 1958.

TABLE 1. SUMMARY OF THE AFRIMET PITCHBLENDE RESIDUES STORED AT THE DOE-NIAGARA FALLS STORAGE SITE AND FERNALD, OH [a]

Residue I.D.	Storage Location	Weight, 10^6kg (ton)	Volume, m^3 (ft^3)
K-65	NFSS Building 434	1.59 (1757)	3115 (110,000)
K-65	Two Silos, Fernaldo, OH	8.79 (9690)	5522 (195,000)
L-30	NFSS Building 411	7.46 (8227)	6089 (215,000) [b]
L-50	NFSS Buildings, 413, 414	1.70 (1878)	(58,000)
F-32	NFSS Recarboration Pit	0.13 (138)	(3,950-12,000)

(a) Source: Cavendish et al., 1978.

(b) This residue is also covered by approximately 297 m^3 (105,000 ft^3) of water

000

This report summarizes the characteristics of the Afrimet residues and gives a preliminary evaluation of the alternatives for processing or disposal of the residues. The evaluation of both processing and disposal are incomplete since the study was terminated in progress. This report reflects results obtained before the project was prematurely terminated. As a result, it has neither the depth or breadth required for option selection.

CHARACTERISTICS OF RESIDUES

Characteristics of the pitchblende residues dictated the migration potential and applicable remedial actions. Records of inventories, radiological and chemical analyses, and extraction processing were examined. In addition, several analytical techniques were used to characterize the stored pitchblende residues. In the interest of cost-effectiveness, not every technique used was employed on every residue sample. Trace element analysis by spark source mass spectroscopy, lead isotope analysis, and optical (microscopy) and crystallographic analyses were performed on L-30, L-50, and K-65 residues. In addition, selected gamma spectroscopy, energy-dispersive X-ray fluorescence analysis, and electron microscopy were used (Ausmus et al., 1981).

Characterization of the K-65 Residues (Building 434, Fernald Silo)

The K-65 residues resulted from the processing of high-grade Katangan (Africa) pitchblende (35-60 percent U_3O_8) by Mallinckrodt Chemical Works, St. Louis, MO (Dostrehan Street Refinery). Prior to April 1, 1949, all residues were shipped to Belgium (African Metals Corporation); from April 1949 until 1953, the residues were drummed and shipped to the AEC portion of the Lake Ontario Ordnance Works. After temporary on-site storage (in igloos north of Balmer Road, in Building 410, and in the open), these were placed in Building 434 which had been modified for this purpose and additional residues were shipped to the Feed Materials Production Center [(FMPC), NLO, Inc.] for storage.

The process used to extract uranium from the Katangan pitchblende ore was similar to that shown in Figure 1. It consisted of a 3-hr, 90°C oxidizing H_2SO_4 leach MnO_2 oxidant to dissolve the uranium while leaving the radium precipitated as $RaSO_4$. $BaSO_4$ was added to ensure coprecipitation. Continued digestion of the leach slurry at 60°C with Na_2CO_3 converted uranium to a soluble uranyl carbonate, causing precipitation of impurities including ferric, aluminum, and managanese hydroxides.

The pitchblende ore contained a variety of uraniferous minerals including largely hydrated uranium oxides and secondary minerals such as soddyite ($12UO_3 \cdot 5SiO_3 \cdot 14H_2O$). The ores were rich in precious metals including gold, platinum, palladium, and silver. Extractions of these precious metals were performed on at least some shipments of pitchblende ore prior to processing at Mallinckrodt Chemical Works.

The residues are composed of two fractions: (1) a "slimes" fraction (<400 mesh) containing solubilized recrystallized fractions including radium-contaminated barium sulfate and (2) a "sand" fraction (>400 mesh) containing undissolved ore particles and primarily less soluble silicate secondary minerals. According to Litz (1974), only about 5.6 percent of the radium content of the residue is found in the 26.9 percent sand fraction (24 ppb in 65 x 100 mesh, 105 ppb in >65 mesh). The average residue radium concentration was reported by Litz (1974) to be approximately 300 ppb.

The samples analyzed by Litz (1974) in the Hazen Report were taken from the FMPC in Ohio. The Niagara Falls stored residue is similar (Table 2) but may be depleted in many of the metals. However, samples of the K-65 residue stored at the Niagara Falls Site were taken from near the base of the tower and may not be totally representative of the stored residues. Based on the best available data, the K-65 residues at the Site have a uranium concentraiton of 1410-1965 ppm and radium concentration of 220 ppb. The ^{222}Rn concentration in air at the top of the tower prior to the tower being sealed ranged from 4-117 nCi/l in late summer. The isotopic

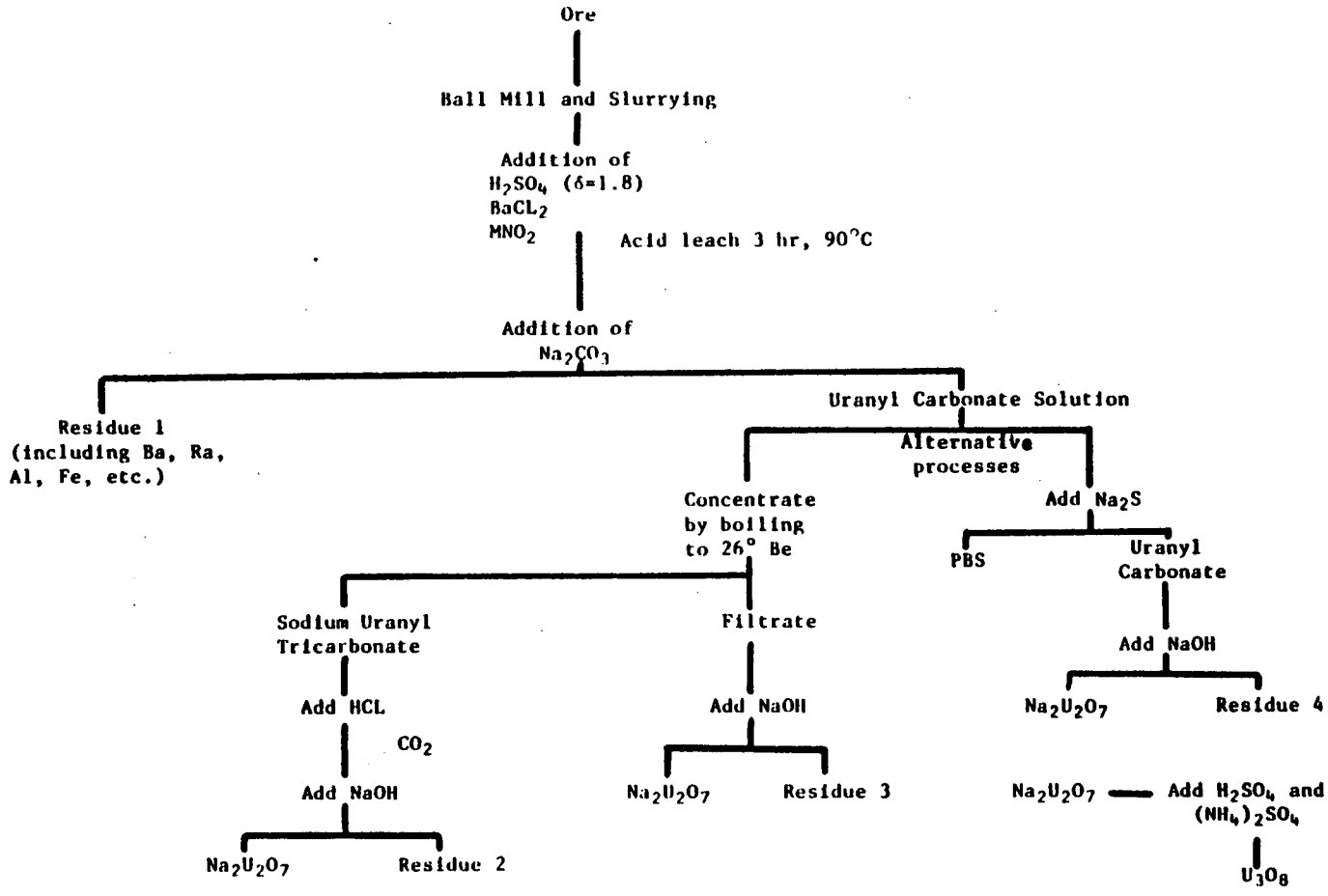

FIGURE 1. FLOWSHEET OF PROCESSING OF RICH KATANGAN PITCHBLENDE ORES FOR U_3O_8 EXTRACTION

4443

TABLE 2. CHARACTERISTICS OF THE K-65 RESIDUES STORED IN BUILDING 434 OF THE DOE-NIAGARA FALLS STORAGE SITE AND AT THE FMPC, FERNALD, OH

Characteristic	FMPC Stored K-65			Niagara Falls Stored K-65	
	Litz[a]	NLO[b]	Vitro[c]	BCL[d]	NLO[b]
Dry wt, kg (tons)	-	8.79×10^6 (9,690)	1.59×10^6	-	(1,757)
Estimated volume, m^3 (ft^3)	-	5,522 (195,000)	3,115	-	(110,000)
Density, kg/m^3 (lb/ft^3)	-	-	1,179	-	(73.6)
Uranium, ppm	1,800-3,200	600	2,110	500[e] 18,240[f] 30,000[g] 1410-1961[h]	500
Lead, ppm	60-70,000	48-52,000	94,900	35,000	95,000
Radium, ppb	280-360	200	300	217	180
Barium, ppm	50,000	-	45,300	30,000	-
Iron, ppm	13-18,000	-	-	5,000	-
Gold, ppm	65-78	<40-60	-	<0.2	-
Platinum, ppm	0.9-1.4	-	-	<0.5	-
Palladium, ppm	13-18	-	-	20	-
Silver, ppm	18	<20	-	<3	-
Copper, ppm	500-800	400-600	-	500	-
Cobalt, ppm	1,600-2,000	1,500-2,000	-	2,000	-
Nickel, ppm	3,500-3,700	2,000-3,000	-	3,000	-

(a) Source: Litz, 1974.

(b) Source: NLO, Inc., and Battelle Columbus Laboratories, 1980.

(c) Source: Vitro Corp., 1952.

(d) Same as (b) above.

(e) Direct gamma spectroscopy of the residue.

(f) X-ray diffraction of the residue.

(g) Spark source mass spectroscopy.

(h) Calculated U from Ra measurements.

4448

analyses conducted by gamma spectroscopy suggest the residues resulted from ores 40-50 percent U_3O_8. ^{214}Pb, ^{214}Bi, and ^{210}Pb are in secular equilibrium with their parent, ^{226}Ra. The other nuclides detected (^{231}Pa, ^{227}Th, ^{223}Ra, and ^{219}Rn) result from the decay of the small amount of ^{235}U found in the ore. No ^{234}Th was detected, supporting the conclusion that ^{238}U concentrations of the residues are <2000 ppm. The detection of ^{231}Pa results from its long half-life compared to ^{234}Th.

The physical form of the residue is a wet clay [∿30 percent water (Vitro Corp., 1952)] with an appreciable alpha quartz ($-SiO_2$) fraction. The clay is a sheet-like muscovite (mica). The elemental analyses performed indicate the muscovite is present as almost stoichiometric $KAl_2Si_3AlO_{10}(OH)_2$. The muscovite constitutes approximately 60 volume percent; the alpha quartz, approximately 25 volume percent. This conclusion is consistent with the Hazen analysis of the K-65 residues stored at FMPC and their particle sizes (Litz, 1974). Barite was present as a discrete phase. Wulfenite ($PbMoO_4$) was present as <10 volume percent. The presence of this yellow lead ore was also confirmed by spark source mass spectroscopy which showed higher Mo compared to other residues. Trace concentrations of feldspar were also detected. Chemically, the K-65 residues are mixtures of oxides, carbonates, and sulfates. Oxides are approximately 40 percent of the residues; carbonates and sulfates, 20 percent (Vitro Corp., 1952). The primary form of the uranium is sodium uranyl carbonate.

Characterization of the L-30 Residues (Building 411)

The L-30 residues resulted from extraction of a low-grade pitchblende (approximately 10 percent U_3O_8) by the Linde Ceramics Plant, Tonawanda, NY (December 1943 - October 1944). The Linde process was a H_2SO_4 leach followed by Na_2CO_3 neutralization of the slurry and filtration of the uranyl carbonate slurry. The filter cake was stored in Building 411 of the Manhatten Engineering District (MED) used portion of the Lake Ontario Ordnance Works.

Spectral analysis of grab samples of L-50 taken from the west bay of Building 411 showed an abnormally high value of ^{208}Pb suggesting that a small amount of ^{232}Th residues were stored in the building. The data available suggest uranium concentrations varying from 830-5000 ppm and radium concentrations from 2-12 ppb.

The wide range of values is indicative of the heterogeneity of these residues. The L-30 residues are stored in both the east and west bays of Building 411. The west bay is covered with water, and standing water covers residues in the south part of the east bay. The presence of ^{232}Th suggests presence of residues from thorium processing. In addition, several barrels of residue marked L-50 and other residues, unmarked, were placed on the residues in the north portion of the east bay. Approximately 2970 m^3 (105,000 ft^3) of water cover portions of the residues. Screening of water samples suggest they contain concentrations of Ra (∿3 ppb) and U (<20 ppm) indicative of their solubilities and relative concentrations.

The concentrations of precious metals in these residues is quite low (Table 3).

TABLE 3. CHARACTERISTICS OF THE L-30 RESIDUES STORED IN BUILDING 411 OF THE DOE-NIAGARA FALLS STORAGE SITE

Characteristic	BCL [a]	NLO [a]	Vitro [b]	Litz [c]
Dry wt, kg (tons)	-	(8,227)	(8,740)	-
Estimated volume, m^3 (ft^3)	-	(215,000)	-	-
Density, kg/m^3 (lb/ft^3)	-	(52.6)	-	-
Uranium, ppm	5,000	1,800	1,950	830
Lead, ppm	7,500-23,500	-	-	7,600
Radium, ppb	12 [d]	8	-	2
Barium, ppm	10,000-20,000	-	-	1,900

TABLE 3. (Continued)

Characteristic	BCL[a]	NLO[a]	Vitro[b]	Litz[c]
Iron, ppm	10,000-20,000	-	-	66,000
Gold, ppm	< 0.2	-	-	0.7
Platinum, ppm	< 0.5	-	-	0.2
Palladium, ppm	2	-	-	6.2
Silver, ppm	< 2	-	-	-
Copper, ppm	1,500-5,000	2,000	-	1,100
Cobalt, ppm	5,000-10,000	6,200	-	2,600
Nickel, ppm	30,000-50,000	20,000	-	6,200

(a) Source: NLO, Inc., and Battelle Columbus Laboratories, 1980.

(b) Source: Vitro Corp., 1952.

(c) Source: Litz, 1974.

(d) Sample of west bay stored residues only.

The density of the residues is significantly lower than that of the K-65 residues. Of the residues stored at the Site the L-30 residue contains the highest concentration of chamosite clay (70 volume percent). This clay appears to have nickel substituted for much of its iron. Sodium uranyl carbonate [$Na_2UO_2(CO_3)_3$] is present in the residues. The carbonate is sorbed on the surface of the clay rather than being a structural component of the clay phase. Alpha quartz represents approximately 20 volume percent and barite ($BaSO_4$) is present as a few volume percent.

Characterization of the L-50 Residues (Buildings 413-414)

The L-50 residues resulted from uranium extraction of African pitchblende ores of approximately 7 percent U_3O_8. Extraction by the Linde Ceramics Plant was similar to that described for the L-30 residues above. The characteristics of the L-50 residues are summarized in Table 4.

4443

TABLE 4. CHARACTERISTICS OF THE L-50 RESIDUES STORED AT THE DOE-NIAGARA FALLS STORAGE SITE

Characteristic	BCL[a]	NLO[a]
Dry wt, kg (tons)	-	(1,878)
Volume, m^3 (ft^3)	-	(58,000)
Density, kg/m^3 (lb/ft^3)	-	(79)
Uranium, ppm	1,000-2,100	1,200-1,300
Lead, ppm	7,000	7,600
Radium, ppb	8-12	7.8-9.3
Barium, ppm	20,000	-
Iron, ppm	20,000	-
Gold, ppm	<0.2	-
Platinum, ppm	<0.5	-
Palladium, ppm	2-3	-
Silver, ppm	<0.5	-
Copper, ppm	2,000-3,000	2,400
Cobalt, ppm	10,000	5,900
Nickel, ppm	20,000-30,000	19,100

(a) Source: NLO, Inc., and Battelle Columbus Laboratories, 1980.

Uranium concentrations range from 1000-2000 ppm; sodium concentrations, 7-12 ppb.

The L-50 residues were comprised of three components. The major component, a clay, was identified as antigorite. Its cationic composition is 17 percent Mg, 27 percent Al_2, 48 percent Si, and 8 percent distributed among Mn, Fe, and Ni. The clay is 60 volume percent of the residue. The second component is alpha quartz (33 percent). No sodium uranyl carbonate was detected. The residues are, however, rich in both oxides and carbonates.

Characterization of the F-32 Residues (Recarbonation Pit)

These residues resulted from Linde Ceramics extraction of Q-20 pitchblende ore from the Belgium Congo area. The F-32 residues originally consisted of 138-250 tons (NLO, Inc., and Battelle Columbus Laboratories, 1980; Vitro Corp., 1952) (0.12-0.23 x 10^6 kg). The inventory data suggest that the uranium concentration was 0.4-0.65 percent (4000-6500 ppm). These residues were stored in the recarbonation pit west of Building 411. The pit has filled with water and the residues may have been leached by the water to some degree. During the autumn of 1980, the pit was covered to prevent additional precipitation intrusion.

PRELIMINARY EVALUATION OF RESIDUE DISPOSAL/STORAGE ALTERNATIVES

While the K-65 residues stored at FMPC are within silos built for that purpose, Afrimet residues stored at the Niagara Falls Storage Site are within buildings which were designed to be the water storage and treatment system for the Lake Ontario Ordnance Works. During the fall of 1980, upgrading of these facilities was begun by severing/sealing or resealing pipes connecting some of the buildings and draining to the Central Drainage Ditch. Roof repairs were made to Buildings 411, 413, and 414 as well. However, current residue storage may not represent a viable waste storage practice because:

- the water tower, Building 434, modified for residue storage may be sensitive to seismic activity;
- Building 411 contains waterlogged residues and the potential for subsurface leakage exists; and
- Buildings 413 and 414 are not sealed and represent a significant radon flux contributing to radon air concentrations exceeding state standards at the site boundary (Lutts Road).

Alternatives are available for interim (<20 years) and long-term storage disposal of the Afrimet residues. The consideration below is predicated on the use of interim alternatives which do not decrease the long-term options available for recovery or disposal. The evaluation is far from

complete. Cost estimates have not been made. However, the reader is referred to NLO, Inc., and Battelle Columbus Laboratories (1980) for initial cost estimates of selected alternatives.

Criteria suggested for interim and long-term storage/disposal alternatives include:

- isolation of residues from environment;
- retrievability;
- consolidation of residues in one portion of the NFSS;
- suppressed Rn emanation rates; and
- minimum maintenance and surveillance costs.

The discussion below is divided into interim storage and long-term storage/disposal alternatives. The discussion is purposefully not redundant with the NLO scoping study and is primarily aimed at on-site activities, at least on an interim basis. Because of the criteria listed above, it is assumed that the K-65 residues will remain isolated from others at NFSS and in the interim period the K-65 residues stored at FMPC will remain in their current storage conditions.

Interim Storage Alternatives

Three interim storage options were considered. They are: (1) upgrading, (2) minimum consolidation, and (3) consolidation. The elements of each of these options and a description of their advantages and disadvantages are given below.

Upgrading

The elements of upgrading are: (1) placing F-32 residues into Building 411, (2) capping Building 411 and trenching by clay emplacement, (3) capping and sealing Buildings 413-414, and (4) making complete evaluation and upgrading of Building 434. The advantages of this option are the short length of time required to implement it and minimum cost. Disadvantages include lack of consolidation of residues, continued presence of Building 434, and continued monitoring and surveillance costs.

Minimum Consolidation

The elements of this option are: (1) placing F-32 residues into Building 411, (2) upgrading Building 411 by capping and trenching followed by clay emplacement, (3) capping and sealing Buildings 413-414, and (4) preparing pad and lower Building 434 for horizontal storage at the current location. This option would lower the visibility of Building 434, minimizing upgrading needed for continued storage of the K-65 residues in the building. The option is more costly than upgrading and would not consolidate residues in one portion of the site.

Consolidation

Consolidation would place all Afrimet residues into Building 411. The building would be prepared by dewatering and water treatment moving current residues to one bay, sealing the empty bay, then combining L-30, L-50, and F-32 residues into that bay. The remaining bay would then be sealed and a set of concrete cells prepared for receipt of the K-65 residues. After residue transfer, the building would be sealed, potentially using clay and removable concrete lid. The rubble of Buildings 413, 414 and 434 would represent a waste management problem and could be consolidated and stored on a concrete pad at the site.

While this option is the most expensive of those available as interim measures, it satisfies all the criteria discussed above and allows the northeast section of the site to be removed from operational status. Monitoring and surveillance costs would be minimized and due to upgrading, effective storage over an interim period of at least 20 years assured.

Long-Term Storage/Disposal Options

Three long-term options were examined. They are: (1) off-site shipment for disposal, (2) vault storage/disposal on-site, and (3) immobilization and storage/disposal. The elements of each option and discussion of the advantages and disadvantages are given below.

Off-Site Shipment for Storage/Disposal

Bulk shipment of the L-30, L-50 and F-32 residue is possible. The K-65 residues would require containerization in order to meet transportation standards (DOT). While this option would lead to alternate uses of the site and is preferred by the Oversight Committee, there are several problems. First, a disposal site would have to be identified. Second, transportation requires both economic and exposure costs. Third, the utility of the site in the private sector is questionable due to the development of sanitary and hazardous waste disposal operations to the north and east of the site.

Vault Storage/Disposal On-Site

Placement of residues into a vault in or on the soil of the site would satisfy criteria listed above and satisfy long-term storage requirements. The vault could be designed to allow segregation of K-65 residues from the remainder of the Afrimet residues and minimize radon flux by proper sealing of the vault. The design used at FMPC for K-65 residue storage could be modified for use as could standard concrete vault designs. Placement of the vault in the ground would require (1) proper isolation from the sand-gravel lenses in these soil profiles and (2) continual monitoring to assure no subsurface leakage into these lenses. Aboveground vaulting would require additonal measures for radon suppression.

Immobilization

Technology is currently available to immobilize the Afrimet residues, producing a waste form of minimal risk (leachability, dispersion) and maximum transportability. Immobilization technologies potentially applicable include:

- compaction
- dehydration
- sorting
- leaching

- ion-exchange
- sorption
- calcination
- acid reduction
- crystallization
- incineration
- wet screening
- cationic flotation
- solvent extraction
- attrition scrubbing
- impregnation, encasement
- molten precipitation
- chelation, evaporation, and immobilization
- resistance furnace fusion.

Significant volume reduction of residues will be difficult to achieve. Compaction and dehydration produce only very small reductions in volume and techniques which can be readily applied to other materials classified as solids have little or no affect on these residues.

Decontamination can be achieved to some degree by such methods as sorting, leaching, ion exchange, sorption, calcination, acid reduction, and crystallization (Straub, 1975; U.S. EPA, 1978). Another technique which holds promise of significant immobilization and volume reduction is incineration (Pradel et al., 1970). Very likely a combination of these techniques would be necessary to achieve the level of decontamination which would permit significant reductions in volume. Fluidized bed incineration, among several methods, appears to be a viable route. Preparation for incineration could involve the addition to or preparation with the residues of such substances as chelates which would attract the radioactive materials and also provide a burnable mixture. The incineration products and off-gas would be routed to a quench tower scrubber. A majority of the contaminants would be removed from the off-gas by a recycled scrub solution for treatment.

Soil and tailings decontamination have been the subject of studies of Rocky Flats where four methods have been under development (Algord et al., 1979). The four methods are wet screening at high pH levels, attrition scrubbing with Calgon©, attrition scrubbing with low pH, and cationic flotation of clays. Those methods are reported to be capable of effectively decontaminating 60 to 84 weight percent of the soil containing actinides. The high pH attrition scrubbing process has been selected for pilot plant testing as a prototype for a 10,000 kg/hour model process plant. The process uses Calgon© solutions to process the soil in a rotary-type scrubber four times with the fines being decanted each time. This represents a removal of 99.9 percent of the activity from the decontaminated portion. It is projected that with the addition of a blender-type scrubber, the weight percent can be further increased. Additionally, tertiary methods are being researched to further increase the amount of material that is decontaminated. Rocky Flats projects costs to decontaminate 90 percent of the soil and ship the remaining 10 percent at $123 per 1000 kg. Present costs are $225 per 1000 kg to dig, package, and ship soil "as is". The cost savings are significant.

The process of sorting has been used in the decontamination of the Gnome Site, Eddy County, NM (U.S. DOE, 1978). The determination of areas containing radioactive contamination by careful probing and monitoring permitted the selective removal of the materials which contain more than 2×10^{-5} microcuries per gram of soil for beta/gamma emitters and 3×10^{-2} microcuries per milliliter of tritium in soil moisture. Further studies were planned to determine concentrations of ^{137}Cs and ^{90}Sr in various locations.

A degree of volume reduction is achieved with the removal of various elements from residues. For example, ^{226}Ra is an isotope which requires considerable attention. The addition of calcium chloride to mill tailings is beneficial because the chemical similarities between calcium and radium reduces mobility of the radium. Treatment of the tailings with barium chloride results in radium removal in the agitated

barium chloride tank (Kirner et al., 1979). Control of ^{226}Ra is also achieved by the addition of barium chloride and retention of the resulting precipitates in large settling ponds (Moffett, 1979). Processing for ^{226}Ra removal was discussed in detail under the alternatives for processing section above.

Impregnation or encasement techniques do not seem particularly appropriate. Asphalt, concrete, thermosetting resins, DOW nuclear binder, and urea formaldehyde all increase volume to be disposed. Stability of some of the impregnation materials under shallow land burial, especially in the East is questionable.

Calcining could be applied to residues. For example, rotary kiln calciners could be used to remove water. The waste product would be a fine powder whose bulk density may not be significantly less than the original residues. The calcine would have to be compacted, sintered, or hot pressed.

Residues could be dissolved in molten urea and then precipitated. The precipitate could then be sintered. Alternatively, appropriate chelates could be mixed with soil and many contaminants removed. Chelates would then be removed by evaporation and sludge immobilized in a binder such as DOW nuclear binder.

Finally, the most applicable technique would be vitrification resins, a resistance furnace fusion technique. The technique is somewhat similar to vitrification used for high level liquid waste solidification. This technique has been designed for soil immobilization and seems to have good potential for application at the several sites requiring immobilization of residues and contaminated soils.

Preliminary Evaluation of Available Techniques

Table 5 shows an analysis of the available techniques using several criteria which need to be met in evaluating potential soil volume reduction techniques. These criteria include:

- dehydration,
- separation of any organic matter from radiological and nonradiological hazards,

TABLE 5. PRELIMINARY EVALUATION OF SEVERAL IMMOBILIZATION/VOLUME REDUCTION TECHNIQUES USING SEVERAL CRITERIA FOR USE IN STORAGE/DISPOSAL OF PITCHBLENDE RESIDUES

(Criteria fulfilled by the technique are shown by an "x".)

Technique	Dehydration	O.M. Separation	Volume Reduction	Migration Reduction	Waste Heterogeneity Reduction	Solidification	Nonradiological and Radiological Applicability
Compaction	X		?				
Dehydration	X						
Sorting	?	?	?				
Leaching		X		X	?		
Ion-exchange		X		X	?		
Sorption	?	X		X	?		?
Calcination	X	X	?	X	X	?	X
Acid reduction		X		X			
Crystallization	X	X		X			
Incineration	X	X	X	X	X	?	?
Wet screening	X			X			
Cationic flotation		X		X			
Solvent extraction		X		X			
Attrition scrubbing		X		X			
Impregnation, encasement	X			X	?	X	?
Water precipitation	X	X		X			
Chelation, immobilization	X	X		X		X	
Vitrification	X	X		X	X	X	X

- sufficient reduction in volume to decrease transport and disposal costs appreciably,
- reduction in migration potential of materials,
- capability of reducing heterogeneous contaminated materials including residues, soils, organic debris, scrap metals, etc.
- solidified products which will minimize risks due to leachability or resuspension, and
- minimum distribution of radiological and nonradiological contaminants.

Many of the techniques do not result in significant volume reduction but produce a stable waste form. These include sorting, leaching, ion exchange, acid reduction, wet screening, cationic flotation, and attrition scrubbing. Many of these same techniques also result in significant volumes of contaminated water.

Techniques best satisfying the criteria shown (see Table 5) also seem to have minimum health and environmental risks. Other techniques seem to have limited applicability. Applicable techniques are:

- calcination,
- incineration,
- chelation and immobilization, and
- vitrification.

Calcination is certainly well documented (U.S. EPA, 1978; Pradel et al., 1970) and will not be belabored here. However, it seems that calcination may be difficult on highly heterogeneous materials in some contaminated areas without some pretreatment on sorting steps. In addition, calcines will have to be further processed due to the waste form's resuspension hazard.

Incineration seems quite applicable and enjoys few health and environmental risks (U.S. EPA, 1978; Pradel et al., 1970). Because of its applicability to heterogeneous materials, fluidized-bed incineration seems worth evaluation (Moffett, 1979). Gaseous losses would require monitoring and potentially pollution abatement. Residual materials might require immobilization in order to produce a reasonably nonleachable waste form.

Chelation would require knowledge of contaminated material composition. However, some chelates, such as EDTA, have wide applicability for nuclide and metal removal. The chelate could then be evaporated successfully. However, an additional immobilization step would be required. Also, chelate use increases, at least temporarily, health and environmental risks (Means et al., 1978).

Vitrification

Since vitrification of low-level wastes resistance fusion technique is new and not described in the literature, knowledge of the technique gathered to date is summarize here. The technique is a patented process which uses specific electrodes to resistance furnace materials into a molten stream in the absence of oxygen. The molten stream is then poured and solidified in molds or containers for disposal as required.

Soils from a contaminated area of a Surplus Facilities Site in the eastern U.S. were obtained and used to evaluate the potential volume reduction technology. Tests were run using a laboratory scale furnace with graphite electrodes. Initial tests were conducted and product composition were determined using scanning electron microprobe microscopy and mass spectroscopy.

Figure 2 shows analysis of the resulting solidified product from a typical sediment sample and Figure 3 from a typical contaminated silt-loam soil. Original water content was approximately 30 percent by weight, organic matter 15-18 percent for these samples. Volume reduction was 6:1 and 8:1, respectively. The resulting product contains no water, no organic matter, and can be produced in a solid form with almost no void space by pouring the molten product in the absence of oxygen. Table 6 is a summary of chemical composition of solidified iron cake residue and slightly contaminated ditch sediments.

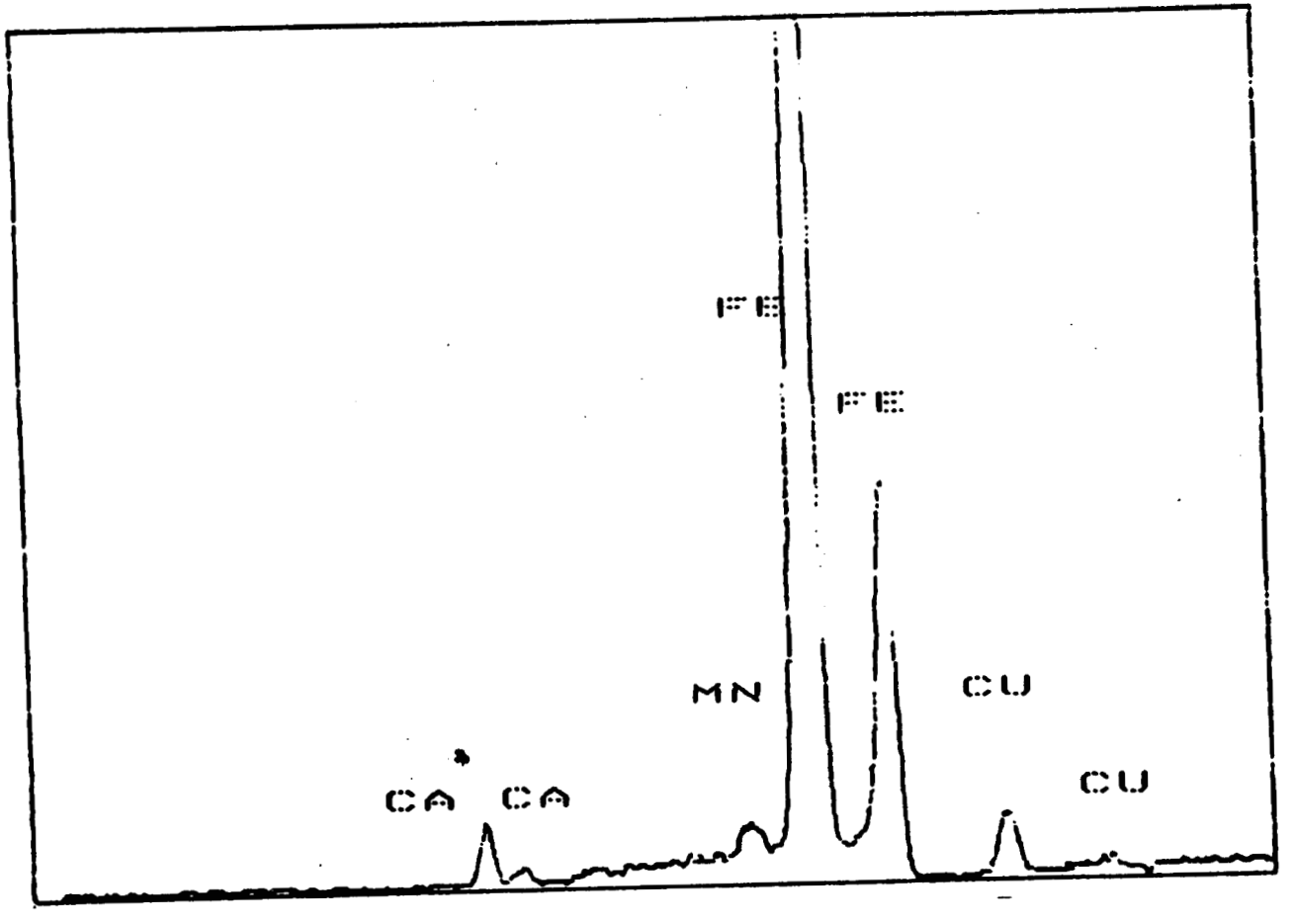

FIGURE 2. RESULTING SOLIDIFIED PRODUCT MADE BY RESISTANCE FURNACE FUSION OF A CONTAMINATED DITCH SEDIMENT

(Units are relative as function of most abundant element.)

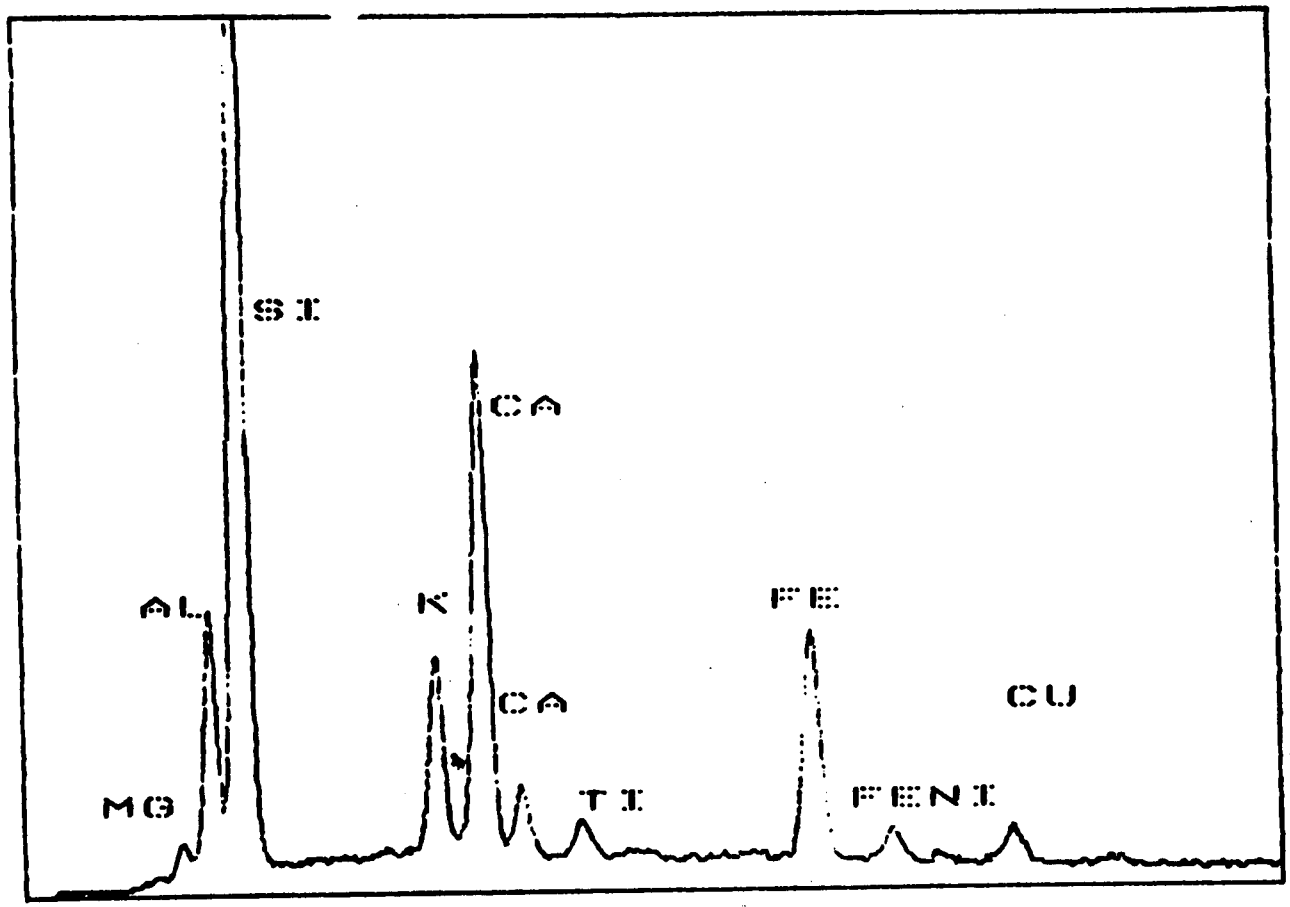

FIGURE 3. RESULTING SOLIDIFIED PRODUCT MADE BY RESISTANCE FURNACE FUSION OF A CONTAMINATED SOIL SAMPLE

(Units are relative as function of most abundant element.)

TABLE 6. SUMMARY OF THE CHEMICAL COMPOSITION OF SOLIDIFIED IRON CAKE RESIDUE AND DITCH SEDIMENTS

Element	Iron Cake Residue (Percent)		Ditch Sediments (Percent)	
	Weight	Atomic	Weight	Atomic
Al	--	--	6-9	9-11
Si	16	28	27-58	38-65
K	--	--	6	5-6
Ca	2-3	2-4	16-19	12-19
Ti	--	--	1-3	1-2
Fe	81-95	70-94	8-38	5-27
Mn	1-2	1-2	--	--

From data available to date, the product would be expected to be a composite of a glassy phase and crystallites present as discrete phases within the glass. The crystalline phase would be a complex of oxides. The structure most likely would be that of the naturally-occurring mineral carnegeite, a very stable calcium aluminum silicate which can accept a number of other elements into its lattice. Ion size considerations suggest that radium, thorium, and uranium would remain in the glassy phase. There is no evidence that there is any structural instability due to these ions being present in the glassy phase.

In an effort to address any volatile losses during the melt-compaction process, it was established that the process was reducing components to many natural oxides. Those oxides which are more volatile in the reduced state than in the oxidized state will have their volatility enchanced. Neither thorium nor uranium is more volatile under these fairly mild reducing conditions; their volatility will not be enhanced. Radon present within the soil at the time of processing would be totally liberated and, depending on concentration, may require emission control.

There will be a slight increase in volatility of lead, bismuth, and polonium. The thermodynamics of radium are not well known. However, estimates indicate that volatility would be enchanced under the existing reducing conditions. Some of the rare earths present in extremely low concentrations (e.g., europium and ytterbium) would also volatilize under reducing conditions.

Analysis indicates that total volatile losses from this process would be minimal. If it is considered that any volatile species must reach the surface in order to be vaporized, an estimate of depletion depth in the material can be made. A typical diffusion coefficient for these species in a silicate melt would be 1×10^{-9} cm^2/sec at 1750°K. If we assume that the residence time in the furnace is 30 minutes (1800 seconds), then from the relationship between depletion depth and time for depletion, we have $2\ Dt = e^2$. D is the diffusion constant, t the dwell time (seconds), and e is the depletion depth (cm). The depletion depth then is about 20 μm.

If the melt depth is 10 cm, then approximately 0.02 percent of the volatiles could be expected to escape. A lead level of 500 ppm in the original pitchblende would be reduced to 499.9 ppm in the melt product. The fines and volatiles, however, would be enriched in lead, bisumuth, polonium, radium, and a few of the rare earths. A dust collection system will be required for operation. The volatility changes due to the process do not present a hazard beyond that controlled by state-of-the-art methodology.

Residue Processing

Residue processing is an alternative which bears further consideration. Facilities exist which are capable of additional processing of all but the K-65 residues. It would, however, be necessary to substantially reduce the water content of the L-30, L-50 and F-32 residues, some of which are covered by water. Insufficient information is presently available on the moisture content of the K-65 residues to rule out some drying requirements there also. As far as additional processing of the K-65's is concerned, the state of the art is insufficient at the present

to fully and economically recover all of the valuable minerals contained in those residues. Processing techniques may be developed which will be economically viable in the future.

Appendix A of this report contains a discussion of processes for treating the K-65 residues. The Mound and Hazen Processes are mentioned along with a discussion on the development of a new process employing features from the works of Rawlings [(1951) Mound Laboratory], Litz [(1974) Hazen Research, Inc.], Borrowman and Brooks [(1975) Bureau of Mines], and Seeley [(1977) Oak Ridge].

Summary

It is recommended that serious emphasis be placed on development and evaluation of immobilization technologies applicable to pitchblende residues and contaminated soils. Pursuit of three specific technologies is recommended due to their demonstrated applicability and minimal health and environmental risks. These are:

- calcination followed by immobilization,
- fluidized-bed incineration followed by immobilization, and
- vitrification.

DISCUSSION

The primary objective of this preliminary evaluation was to identify cost-effective interim waste storage measures which do not obviate long-term storage/disposal alternatives. Without a clear market for recovered uranium and low concentrations of precious metals, processing does not seem a cost-effective measure. The interim storage alternative of preference would be upgrading. This would result in a rapid implementation of a waste management alternative uniting migration and radon emanation from the site. While Building 434 may require remedial work, it seems inappropriate to remove and relocate the K-65 residues unless they are immobilized in the process. Long-term storage on-site using immobilized residues placed in an aboveground or shallow vault seems the most cost-effective waste management solution to the Afrimet residues.

REFERENCES

Algord, C. G., J. A. Hayden, R. L. Kochen, R. L. Olsen, and J. R. Stevens. 1979. Soil Decontamination at Rocky Flats. Proc Conf. on Decontamination and Decommissioning, Session 11-B, Sun Valley, Idaho, September 16-20, 1979.

Ausmus, B. S., J. F. Dettorre, and T. L. Anderson. 1981. A Comprehensive Radiological Survey of the DOE-Niagara Falls Storage Site. Final Report by Battelle Columbus Laboratories, BMI-2074 (Rev.), to U.S. Department of Energy, Remedial Action Program, Washington, D.C.

Borrowman, S. R., and P. T. Brooks. 1975. Radium Removal from Uranium Ores and Mill Tailings. U.S. Bureau of Mines RI-8099. 12 p.

Cavendish, J. H., M. G. Mendel, F. W. Neblett, and J. B. Patton. 1978. Scoping Investigation of Alternative Methods for Disposal of Radioactive Residues Stored at the DOE-Niagara Falls Storage Site. National Lead Company of Ohio, Cincinnati, Ohio. 41 p.

Kirner, N. P., A. A. Moghissi, and P. A. Blackburn. 1979. Waste Management of Uranium Mining and Milling Operations. Pp. 174-184. In: Low-Level Radioactive Management. Proc. Health Physics Soc. 12th Midyr. Topical Symp. U.S. Environmental Protection Agency, Office of Radiation Programs, EPA/520/3-79-002, Washington, D.C.

Levins, D. M., et al. 1978. Leaching of Radium from Uranium Tailings. In: Conference on Management, Stabilization and Environmental Impact of Uranium Mill Tailings. Albuquerque, New Mexico.

Litz, J. E. 1974. Treatment of Pitchblende Residues for Recovery of Metal Values. Hazen Research, Inc., for Cotter Corp., Canon City, Colorado. 31 p.

Means, G. L., D. A. Crerar, and J. O. Duguid. 1978. Migration of Radioactive Wastes: Radionuclide Mobilization by Complexing Agents. Science 200:1477-1481.

Moffett, D. 1979. Characterization and Disposal of Radioactive Effluents from Uranium Mining. Can. Min. Metal. Bull. 72(806):152-156.

NLO, Inc., and Battelle Columbus Laboratories. 1980. Scoping Investigation of Short-Term and Long-Term Storage Costs for Afrimet Residues-NFSS and FMPC. Report to the U.S. Department of Energy, Remedial Action Program Office, Washington, D.C.

Pradel, J., P. J. Parsons, and E. Malasek. 1970. The Volume Reduction of Low-Activity Solid Wastes. International Atomic Energy Agency, Technical Report Series No. 106, Vienna. 41 p.

4443

Rawlings, H. L. 1951. The Chemical Engineering of the Radium Process. Mound Laboratory, MLM-609, Miamisburg, Ohio. 56 p.

Seeley, F. G. 1977. Problems in the Separation of Radium from Uranium Ore Tailings. Hydrometallurgy 2(3):249-263.

Straub, C. P. 1975. Nature and Analysis of Chemcial Species: Radioactive Wastes. Water Pollut. Contr. Fed. J. 47(6):1498-1513.

U.S. Department of Energy. 1978. Decommissioning and Decontamination Acitvity, Gnome Site, Eddy County, New Mexico. DPE/EA-0022, Washington, D.C.

U.S. Environmental Protection Agency. 1978. A Survey of the Available Methods of Solidification for Radioactive Wastes. Office of Radiation Programs, ORP/TAD-78-2, Washington, D.C.

Vitro Corp. 1952. Summation Report: Recovery of Radium from K-65 Residue. U.S. Atomic Energy Commission, KLX-1222.

APPENDIX A*

PRELIMINARY ALTERNATIVES FOR RESIDUE PROCESSING

*See Reference List on pgs 26-27 for citations in Appendix A.

4443

APPENDIX A

PRELIMINARY ALTERNATIVES FOR RESIDUE PROCESSING

The most hazardous residue among those stored under lease agreement with Afrimet is the K-65 residue, stored both at Niagara Falls and Fernald. Other residues can be safely transported to established treatment facilities after they have been properly dried and packaged. This would be a substantial effort in time and equipment on-site. The K-65 residues, with their higher activity, could be considered for on-site processing. There has not been a detailed study of the costs involved for such a facility. Further, the question of dealing with the K-65's stored at Fernald would have to be addressed separately.

Objectives of the K-65 residue processes are, in a safe and environmentally acceptable manner, to: (1) remove radium as a relatively small volume concentrated in a form in which it can be stored safely for approximately 10,000 years (around ten half-lives of ^{226}Ra); (2) remove radioactive lead in a form in which it can be stored for 100-200 years, then used as stable lead, or disposed of; (3) recover as much as economically feasible of the valuable metals in the residue to offset the other processing costs; and (4) produce a final, detoxified residue suitable for disposal on land.

A process for treating K-65 residues, if it is to fulfill the noted objectives, must meet the following requirements:

- Separate radium and radioactive lead from other values to be recovered as early in the process as possible to minimize handling of these hazardous elements during processing of the other values.
- Produce radium and radioactive lead concentrates in as small a volume as possible and in chemical forms which have the least possible solubility and corrosivity.
- Produce by-product metal concentrates as free as possible of radium and radioactive lead so the

concentrates can safely be shipped to and handled in established processing plants.

- Remove sufficient radium from the residue to result in a final residue containing less than about 20 pCi per gram (0.02 parts per billion) of radium.
- Use, in contact with radium and/or radioactive lead-containing materials in the process, only reagents which can be readily recycled or easily decontaminated before disposal.

These requirements are, of course, ideal and no one process will conform exactly to all of them, but they can serve as criteria for evaluating potential treatment processes. In addition, while cost is not the overriding consideration in dealing with disposal of wastes as hazardous as these, any process should take into account reasonable limits on such factors as amount of reagent used, equipment required, and residence time of materials in the process. Cost considerations were used along with the foregoing requirements to evaluate the several available residue treatment methods.

Historical Radium Extraction Processes

Each size fraction of the K-65 residue has its own problem with respect to radium extraction. The problem associated with the slimes fraction is the extreme insolubility of radium (1.4×10^{-3} g/l in water, $K_{sp} = 1.9 \times 10^{-11}$) and barium sulfates in aqueous systems and the necessity for dissolving a large excess of barium in order to bring the radium into solution (barium:radium ratio on the order of 200,000:1). The chemistry of barium and of radium are almost identical, so any process for extracting radium will have to deal with barium as well. Conversely, in the sand fraction, much more agressive leaching conditions than the sulfuric acid leach originally used to produce the residue are required to dissolve the silicate matrix in which the radium is dispersed.

There are two basic approaches to the problem of barium/radium extraction from the slimes fraction:

- dissolve the radium and some or all of the barium directly from the sulfate slimes and
- convert the barium and radium sulfates to carbonates by metathesis and leach the carbonates from the residue with acid.

The direct leaching approach has been investigated by several workers. Oak Ridge National Laboratories (Seeley, 1977) has studied direct radium leaching from tailings using salts, complexing agents (EDTA or DTPA), and acids (HCl and HNO_3). The Research Establishment of the Australian Atomic Energy Commission (Levins et al., 1978) has worked with NaCl leaches.

Both the Oak Ridge and Australian workers found that high concentrations of anions such as Cl^- enhance the solubility of barium and radium sufficiently, even in the presence of sulfate, to leach a significant proportion of these elements from the residue. Levins et al. (1978) obtained 90 percent radium extraction using four-stage, 25°C leaching with 5M NaCl solutions. Oak Ridge's (Seeley, 1977) results were similar. On the other hand, Hazen Research (Litz, 1974) reports that very little radium (<0.3 percent) was dissolved when a similar brine leach was used to extract lead from K-65 residue. This inconsistency may be due to an order of solubility whereby the brine leach first dissolves any lead sulfate present, then attacks the less soluble barium and radium sulfates. If so, this effect could possibly be used to dissolve lead and base metals first, followed by radium and barium in later stages, all using the same brine leachant.

Both Oak Ridge and Australian workers, however, note that a major disadvantage of salt leaching is the very large volume of water needed to extract the sparingly soluble sulfates, even in the presence of chloride ion. Levins et al., (1978) conducted a few screening

experiments on sulfate removal from the brine by precipitation as barium sulfate or by ion exchange but found the radium extraction was somehow inhibited when recycled brine was used in the salt leach. This area warrants further research because water volume would not be a severe problem if recycle after sulfate removal were feasible.

Oak Ridge has done preliminary screening tests on chelating leachates, specifically EDTA and DTPA (Seeley, 1977). While the radium extraction in these tests was comparable to that for acid leaching, Oak Ridge researchers concluded that excessively large solution volumes would be required; and more importantly, that large losses of reagents to the solid residue would occur, making this approach uneconomical. The U.S. Bureau of Mines (Borrowman and Brooks, 1975) found that a three-stage, 5-hour, 0.15M EDTA leach at 60°C extracted 92 percent of the radium from sulfuric acid leach tailings, leaving 40 pCi/g radium in the residue. However, Oak Ridge's conclusions regarding solution volume and reagent loss should still apply.

In testing of HCl and HNO_3 leaches of sulfate-laden residue, Oak Ridge (Seeley, 1977) reports that three-stage leaches using 2-6M HCl removed only 58-68 percent of the radium in their residues. HNO_3, on the other hand, gave radium extractions of leaching at 80°C with 3M HNO_3 and 1 hour per stage. Oak Ridge has proposed that up to six stages of HNO_3 leaching could be applied to the residue, dissolving both radium and uranium.

It is clear that lead and other base metals would also go into solution. Recycle of nitric acid would be accomplished by boiling off unused acid, then thermally decomposing the metal nitrates to recover consumed acid. Radium would be separated from pregnant liquor by solvent extraction, ion exchange, or precipitation with $BaSO_4$. Uranium and thorium would be recovered from pregnant nitrate liquor by tri-n-butyl phosphate extraction. While Oak Ridge's suggestions have not been investigated thoroughly enough to propose an integrated process based on them, elements of work—particularly HNO_3 leaching—should be considered in designing such a process (Seeley, 1977).

In addition to the direct leaching approach for the sulfate-laden residues used in the testing described above, there is also the carbonate metathesis approach. This basic approach, used in two different forms by Hazen Research (Litz), 1974) and Mound Laboratories (Rawlings, 1951) to reduce sulfate content prior to HCl and HNO_3 leaching, respectively, is metathesis of the sulfate residues to carbonates. Hazen suggests an atmospheric pressure metathesis using Na_2CO_3, while Mound prefers a higher temperature and pressure reaction using Na_2CO_3 and NaOH (to dissolve residual lead). Both of these approaches produce a barium/radium carbonate residue soluble in acids. The Hazen and Mound processes, since they are both proposed integrated processes, are examined in detail in the next section.

One of the basic questions in designing a residue treatment process is the tradeoff of simplicity of processing when leaching without a prior metathesis step versus production of large volumes of sulfate liquor for disposal or recycle. This tradeoff applies to acid as well as salt leaches. It would appear that elimination of the metathesis step would be economically beneficial, providing that equal radium extraction can be obtained in a direct leach of the sulfate-laden residues and that an economical way to remove sulfate and recycle the brine or acid can be found. These provisos would be fruitful targets for a laboratory research effort.

Evaluation of Hazen Process Chemistry

Brine Leach and Lead Chloride Precipitation

The brine leach step in the Hazen Process (Figure A-1) is intended to remove lead from the residue before the metathesis/HCl leach for barium and radium extraction since lead would also be dissolved in the latter step. The separation of lead from the barium and radium is a logical choice because the many tons or radioactive lead would have to be stored

4443

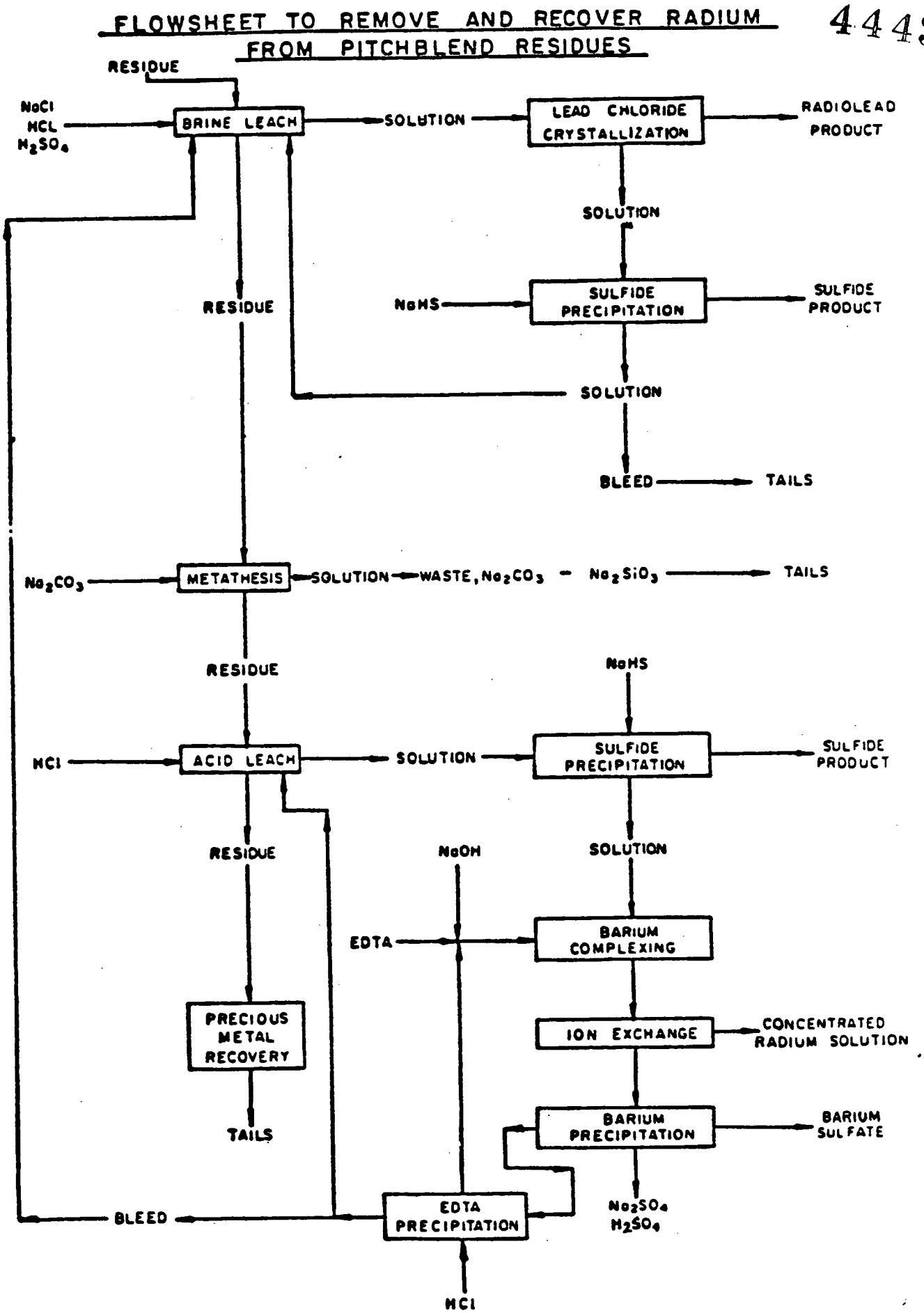

FIGURE A-1. THE PRIME LEACH STEP OF THE HAZEN PROCESS OF RADIUM EXTRACTION

(Source: Litz, 1974.)

4413

for only 100-200 years prior to safe disposal or use, while the much smaller quantity of radium concentrate may have to be stored as long as 10,000 years.

Hazen's laboratory work on the brine leach is summarized in Table A-1 (Litz, 1974). They conclude that "about 90 percent of the lead could be solubilized by three stages of counter-current leaching at 80°C and pH 2 of using a fairly low percent solids in the leach". Hazen recommends optimization to bring the lead concentration in pregnant liquor from the practical maximum of 20 g/l which was achieved, closer to the theoretical 80 g/l.

A leach chloride by-product is obtained in the Hazen Process by cooling the brine liquor to a temperature less than 5°C (Litz, 1974). The mother liquor from this crystallization is treated to precipitate several other metals in a step to be discussed in the next section. The lead chloride by-product might be further processed to recover a marketable polonium by-product.

As noted in the previous section, there is some conflict between the literature and Hazen's results (Litz, 1974) which should be resolved. Levins et al. (1978) found that "over 90 percent of the radium was removed by four-stage leaching 5M NaCl solutions at 25°C" from sulfate leach residues. Hazen claimed that "less than 0.3 percent of the radium appeared to report to the lead chloride product". If radium does dissolve as indicated by the work of Levins et al. (1978) and does not report to the lead chloride crystals, as indicated by Hazen, then soluble radium would build up in the brine liquor to an equilibrium concentration as the brine is recycled. The brine liquor bleed stream which Hazen has labelled (see Figure A-1) as going to "tails" would thus be saturated with radium, causing serious treatment problems. The degree of radium and other hazardous metal (e.g., Po) extraction and the fate of such dissolved materials are issues which should definitely be addressed in laboratory work.

There are potential problems with the lead chloride precipitation. There is presently only a very limited market for polonium and

TABLE A-1. BRINE LEACHING STUDIES [a]

Test Number	83	84	95	96	97	98	99	100	101	102	103	106	107
Number of stages	1	1	3	3	3	1	1	1	1	1	1	2	2
Time/stage, hrs	6	6	3	3	3	2	4	8	2	4	8	4	4
Temperature, C	80	80	80	80	80	80	80	80	80	80	80	80	80
% Solids	33	33	33	33	33	15	15	15	15	15	15	33	33
Brine concentrate,													
g NaCl/l	250	250	300	300	300	300	300	300	300	300	300	300	300
g NaCl/100 g feed	50	50	180	180	180	150	150	150	150	150	150	(b)	(b)
Final pH	3	1	3	6	7.3	5	5	5	3	3	3	3	2
g HCl/100 g feed	10.5	24	22	13	0	18	18	19	20	21	21	22	23
Residue													
Weight, $ of feed	107	92	81	91	96	84	88	83	91	81	80	80/106	79/113
% lead, feed	8.2	8.2	8.2	8.2	8.2	8.2	8.2	8.2	8.2	8.2	8.2	5.2	5.2
% lead, residue	4.8	5.8	1.27	7.4	8.9	3.3	3.0	1.74	1.80	1.40	1.39	1.5/6.6	1/12/5.85
% of lead, dissolved	37	35	87	18	0	66	68	82	80	86	86	77	83

(a) Source: Litz, 1974.

(b) Recycled.

4443

its recovery would almost certainly be uneconomical[1]. If polonium is not to be recovered periodically from the decaying radioactive lead, it does not make sense to store the lead in a water-soluble form such as $PbCl_2$, thus increasing risks of loss to groundwater or other problems. In this case, one solution might be to conduct a hydrogen reductive roast of the lead chloride to produce metallic lead for long-term storage and HCl for recycle. The HCl would re-enter the brine leach system by being sparged into the lead chloride liquor to precipitate lead chloride without cooling to less than 5°C. This procedure is probably well enough established to forego laboratory verification.

Sulfide Precipitation from Lead Chloride Crystallization Mother Liquor

Sulfide precipitation appears to be an efficient way to produce a concentrate of uranium and base metals for further processing in off-site facilities which are equipped to handle slightly radioactive feeds (Litz, 1974). As discussed in the previous section, however, it would be wise to determine in the laboratory the fates of any soluble radium, polonium, or other hazardous metals in the system. Polonium, for example, could report to either the sulfide concentrate or the recycle and bleed streams, or both. Depending on the fate of these materials, modifications such as holding periods to allow polonium to decay to lead in the liquors or the sulfide concentrate may have to be made.

Metathesis

The metathesis of barium and radium sulfates to the corresponding carbonates is used to improve the acid leachability of the brine

---

[1] Telephone conversation with Mr. Robert Kunz of 3M Corp. (Minneapolis MN, 1980), the largest user and producer of polonium. Mr. Kunz said that 3M produces about 20-30 curies per year (worth about $100 per curie) of polonium for static elimination applications.

leach residue. Hazen's laboratory metathesis test results are summarized in Table A-2.

TABLE A-2. METATHESIS STUDIES[a]

Test Number	85	86	89	90	108
Number of stages	2	2	3	3	3
Temperature, C	80	80	80	80	80
% Solids	35	35	20	33	20
Sodium carbonate addition g/100 brine residue	130	130	360	180	480
Sodium carbonate consumption g/100 g brine residue					35
Residue weight % of brine residue	75	88	75	75	73
Residue solubility % of barium soluble in hydrochloric acid	86	85	ND[b]	ND[b]	96

(a) Source: Litz, 1974.

(b) ND = Not Determined. The weight loss in hydrochloric acid indicated lower barium solubility than with the other tests.

It is claimed that a three-stage metathesis using a great excess of Na_2CO_3 at 80°C results in 96 percent solubility of barium (and presumably radium as well) in HCl solution. Each stage of the metathesis treatment takes 4 to 5 hours, plus several hours for settling of the residue following the reaction (assuming that Hazen (Litz, 1974) envisions operating the plant in a manner similar to commercial radium extraction plants).

The major disadvantages of the metathesis treatment as outlined by Hazen (Litz, 1974) are obvious: Consumption of large amounts of Na_2CO_3 (which becomes a waste disposal problem if contaminated with radium or other

hazardous materials) and long residence time (requiring large capacity equipment to maintain adequate throughput). It is quite likely that the reaction rate can be greatly improved by processing under hydrothermal conditions, thus allowing greater throughput with much smaller equipment. There is also a possibility that countercurrent operation could improve both the rate and the degree of completion of the reaction. Both of these modifications should be tested in the laboratory.

The problem of Na_2CO_3 consumption is caused by the fact that $BaCO_3$ is about ten times as soluble in water as $BaSO_4$. Thus, it takes a great excess of carbonate to effect the metathesis of $BaSO_4$ to $BaCO_3$. Recycle of the liquor after removal of SO_4^{-2} by precipitation of an insoluble salt, or by solvent extraction or ion exchange, does not appear to be practical.[1] One possibility for limiting the waste of Na_2CO_3 might be to replace a part of the Na_2CO_3 in metathesis with CO_2 and perform the metathesis under hydrothermal conditions to promote fast reaction in the presence of a high CO_3^{-2} activity. Acidification with HCl would release CO_2 from the spent liquor for recycle to the metathesis, while a portion of the resulting NaCl liquor might be used to provide makeup NaCl for the brine leach. While some version of this scheme might be worth pursuing as a process improvement, it is unlikely that any way will be found to recycle Na_2CO_3 itself.

Acid Leach and Sulfide Precipitation

The carbonates produced during the metathesis are very soluble in HCl solution, so the next step in the Hazen Process (Litz, 1974) is an HCl leach. Hazen concludes that the solubility of the barium and radium depends on the degree of metathesis rather than the severity of leaching conditions. Thus the mild leach proposed by Hazen (25-80°C, ~50 g HCl per

---

(1) Telephone conversation with Mr. Joe House, Vice President, Henkel Corporation (Battle Creek, MI, 1980) a manufacturer of solvent extraction reagents. Henkel has studied the SO_4^{-2}/CO_3^{-2} separation problem exhaustively for the uranium industry and has not found a solution.

100 g feed) should be sufficient to dissolve barium and radium, along with most of the residual uranium and base metals (Table A-3).

TABLE A-3. HYDROCHLORIC ACID LEACHING[a]

Test Number								114
Leach Conditions								
Temperature, C	80	80	80	80	80	25	80	80
% solids	8	8	8	8	10	10	10	10
Target pH	--	--	--	--	--	1.0	1.0	3.0
Hydrochloric acid addition g HCl/100 g feed	238	238	357	357	350	49	51	29
Final pH	0	0	0	0	0	0.6	1.0	2.0
Residue								
Weight, % of feed	76	78	88	88	70.5	79.3	74.5	75.0
% barium, feed	5.44	5.69	--	--	5.5	5.74	5.74	5.74
% barium, residue	1.04	1.07	--	--	7.8	0.28	0.80	0.35
% of barium, dissolved	85	85	--	--	0	96.1	90	95.5
% lead, feed	5.1	5.4	--	--	--	--	--	--
% lead, residue	0.12	0.42	--	--	--	--	--	--
% of lead, dissolved	98	94	--	--	--	--	--	--
ppm radium, feed	493	687	--	--	--	--	--	--
ppm radium, residue	136	105	--	--	--	--	--	--
% radium, dissolved	79	88	--	--	--	--	--	--

(a) Source: Litz, 1974.

The precipitation of uranium and base metals as sulfides by addition of about 0.5 g of NaHS per liter of leach liquor should be effective as noted above for the brine leach liquor. However, the same cautions with regard to radioactive contamination of the precipitates still apply and should be investigated in the laboratory.

Precious metals recovery from the acid leach residue should probably be done on-site in order to maintain control of any undissolved radium remaining in the residue. The cyanidation/zinc precipitation scheme suggested by Hazen (Litz, 1974) is well known technology and should not present any unusual problems. It should be tested in the laboratory, however, in order to determine the concentration of radium in the cyanidation residue to help in deciding whether to extract the precious metals on site or sell the residue to a smelter.

Barium-Radium Ion Exchange and Recovery

Hazen (Litz, 1974) proposes use of an ion exchange process patented by the U.S. Atomic Energy Commission (No.2,892,679) to separate the barium and radium. Sodium form EDTA would be used at pH 5-6 to complex the barium in solution prior to an ion exchange treatment (with Dowex 50 resin) which selectively absorbs the uncomplexed radium. An 8 pH EDTA solution would be used to elute radium from the resin, the pH readjusted to 5-6, and the process repeated several times to get a relatively high radium to barium ratio. The radium/barium concentrate could then be precipitated with sulfate and disposed of in long-term storage. The barren barium/EDTA complex solutions would be treated with sulfate to precipitate the barium for disposal. EDTA would be precipitated by adjustment of pH to 1-2; the resulting acid-form EDTA would be redissolved in NaOH solution and recyled.

Hazen did not verify the barium/radium separation in laboratory studies, so this step should be verified and optimized in the laboratory.

Summary of Laboratory Verification, Optimization, and Further Process Development Needs for the Hazen Process

In the foregoing analysis of the process chemistry, a number of changes and doubts about the viability of certain process steps have been suggested. The following is a listing of all suggested laboratory work directed at verification and/or optimization of Hazen's Process (Litz, 1974) steps and testing of suggested alternatives or additions to Hazen's unit operations:

- Conduct the brine leach under hydrothermal conditions to improve rate of lead extraction. Trace radioactive metal extraction in brine leach as well as the fate of any such dissolved metals during sulfide precipitation and chloride liquor recycle (under either Hazen's leach conditions or hydrothermal conditions). The separate concept of H_2 roasting of $PbCl_2$ to lead metal and HCl for recycle,

combined with HCl sparging of pregnant liquor to precipitate $PbCl_2$ without cooling, has been tested sufficiently by others to verify that it works. If used in this process, it would, of course, have to be optimized for the particular liquors being treated.

- Conduct the metathesis treatment under hydrothermal conditions to improve reaction rate and extent of conversion of barium and radium to acid soluble carbonates. Test the possibility that countercurrent metathesis would also improve the rate.
- For reduction of the Na_2CO_3 consumption in metathesis, test the concepts of liquor treatment with HCl followed by recycle of a portion of the resulting chloride liquor to the brine leach and replacement of part of the Na_2CO_3 with CO_2 in a hydrothermal metathesis, followed by acidification to produce CO_2 for recycle.
- Trace the fate of radioactive metal in the acid leach, sulfide precipitation, and precious metals recovery.
- Verify and optimize the ion exchange process for barium/radium separation.

Evaluation of Mound Process Chemistry

The radium recovery process proposed by Mound Laboratories (Rawlings, 1951) is specifically designed for K-65 residues. Reproduction of Figures A-2 through A-5 give details of process streams and equipment.

Mound's process is aimed strictly at recovery of radium from the residue, with the value of other potential by-products being considered negligible. Mineral economics having changed since 1951, the radium content of the residues can now be considered merely a disposal problem; while the precious metals, uranium, and base metals present in the residues have potential for offsetting treatment costs. Therefore, no attempt

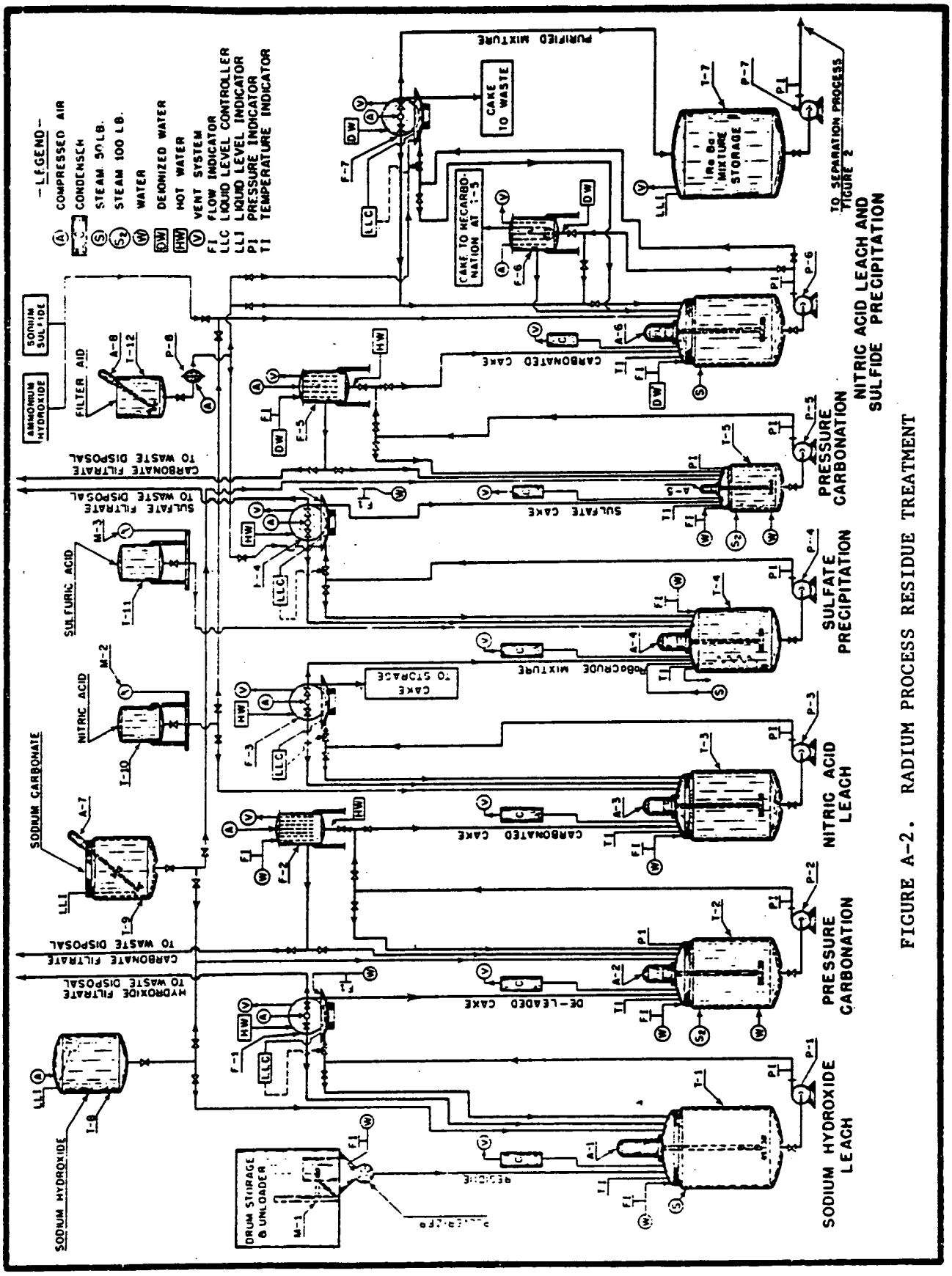

FIGURE A-2. RADIUM PROCESS RESIDUE TREATMENT

[Source: Rawlings, 1951 (Plate #5303)]

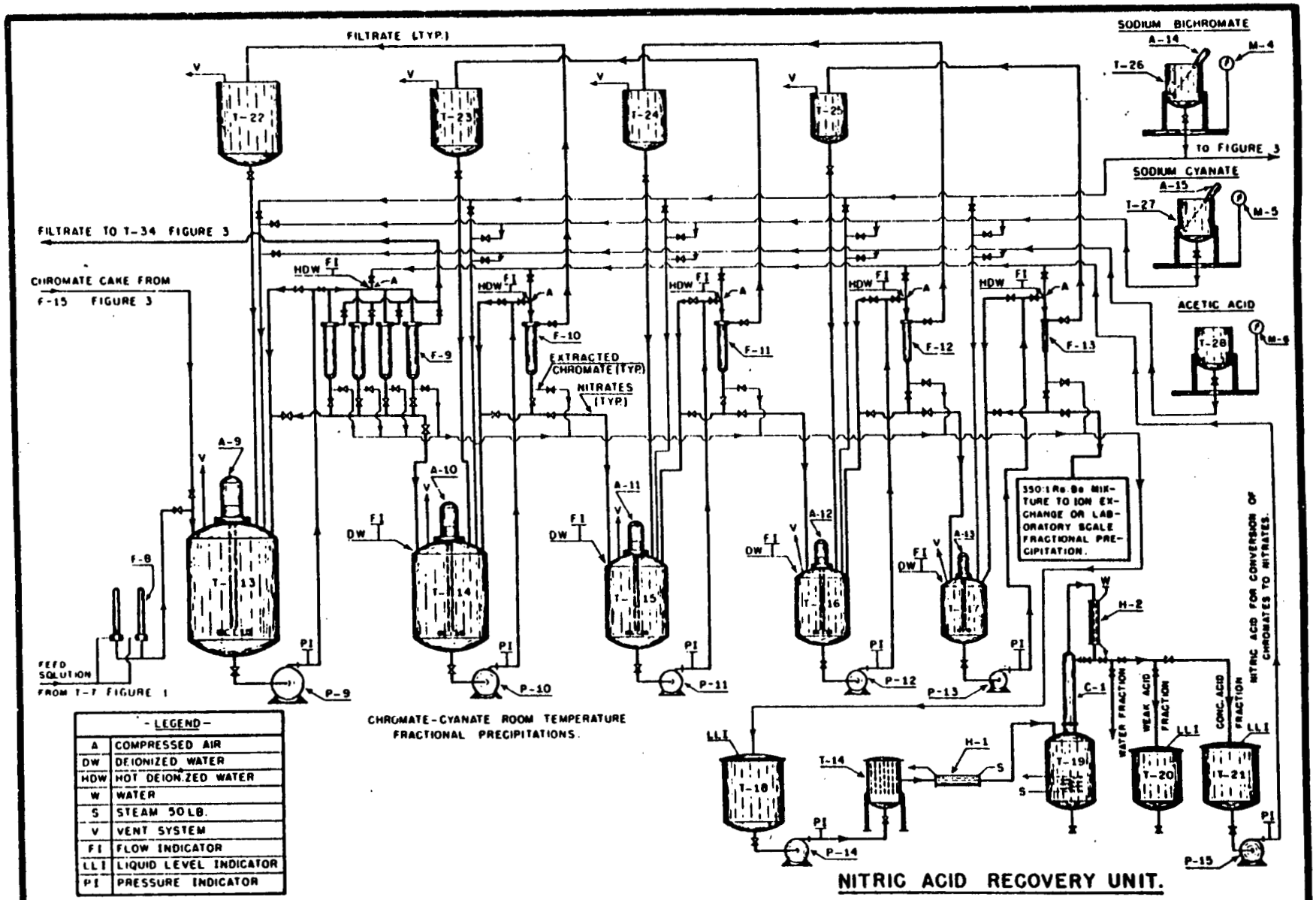

FIGURE A-3. RADIUM PROCESS SEPARATION BY FRACTIONAL PRECIPITATION—RADIUM RICH SIDE

[Source: Rawlings, 1951 (Plate #5241)]

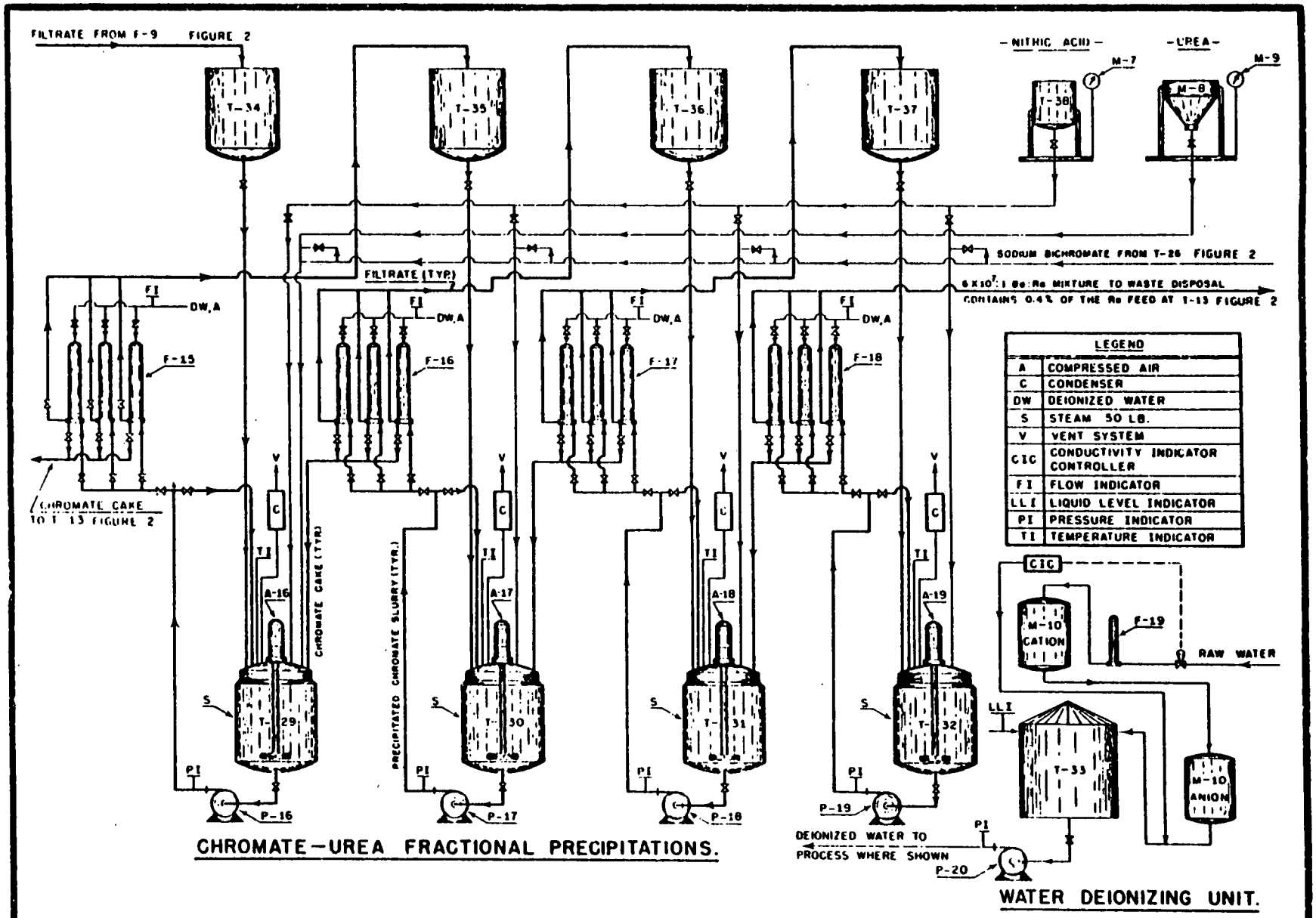

FIGURE A-4. RADIUM PROCESS SEPARATION BY FRACTIONAL PRECIPITATION—BARIUM RICH SIDE

[Source: Rawlings, 1951 (Plate #5242)]

4443

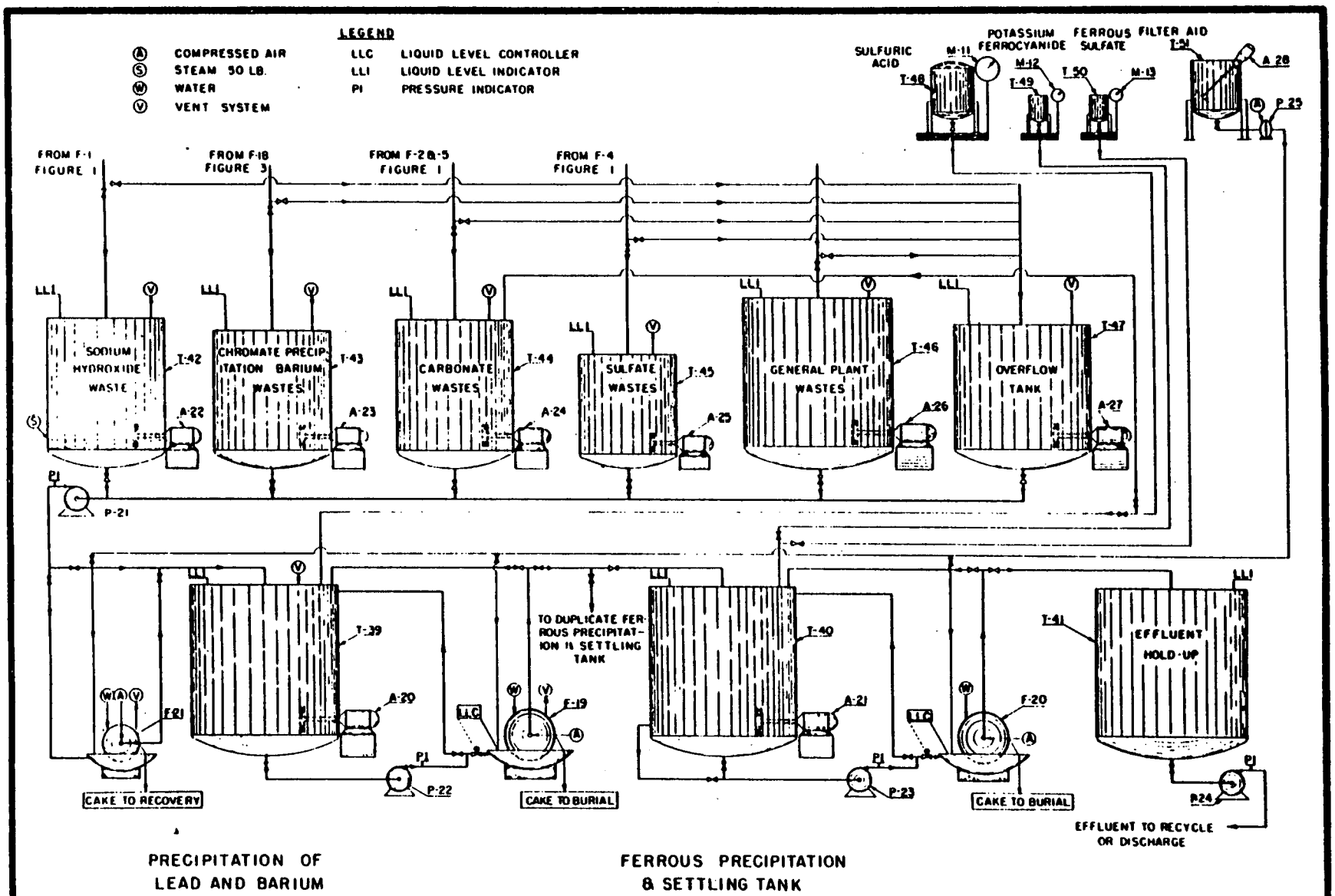

FIGURE A-5. RADIUM PROCESS WASTE DISPOSAL

[Source: Rawlings, 1951 (Plate #5378)]

4448

will be made here to suggest improvements to the Mound Process. The evaluation will instead focus on the question: What aspects of the Mound Process can be adapted to improve upon the Hazen Process or incorporated into a new process having the objective of non-radium by-product recovery along with residue decontamination and radium volume reduction?

Rawlings divides the Mound Process into three basic steps:

- Lead extraction
- Barium/radium extraction
- Barium/radium separation.

The barium/radium extraction by nitric acid leach of metathesized sulfate solids followed by successive re-leaching, re-metathesizing, and recycling of the materials and finally a sulfide precipitation of remaining base metal impurities is designed solely to produce a pure barium/radium nitrate solution. Since this complicated and expensive series of steps is incompatible with the goal of by-product recovery, the technology utilized for barium/radium extraction will not be considered in detail here. The barium/radium separation method used in the process is fractional crystallization of the chromates. This procedure is also complicated, hard to automate, and uses large volumes of water which become a waste treatment problem. The ion exchange method proposed by Hazen Research, not available in 1951 when Mound Laboratories developed their process, is clearly superior on all counts.

The part of the Mound Process which merits attention is the lead extraction step. Lead is removed from the residue as sodium plumbate by boiling for 1-1/2 to 2 hours in a 15 percent NaOH solution. Enough solution is used to provide an NaOH: solids ratio of 0.54. This treatment dissolves 85 percent of the lead and 40 percent of the silica as Na_2PbO_2 and Na_2SiO_3, respectively. Most of the rest of the lead (98 percent total extraction as plumbate) and silica (75 percent total extraction) is removed in the subsequent pressure metathesis step which includes added NaOH for that purpose. The caustic leach slurry is hot vaccum filtered with the residue going to the metathesis and the filtrate being treated as a waste liquor.

One advantage of the alkaline route for lead dissolution is that the silica in the coarse "sand fraction" of the K-65 residue is attacked. This attack should release the portion of the radium and other metals which is finely disseminated in the silica particles, thus allowing for a more complete recovery during subsequent processing and a final residue which is lower in radium content than would otherwise be possible. It seems that this attack on the silica should be made as complete as possible, in order to maximize the advantages noted. A more complete--and much more rapid--attack could be accomplished by use of hydrothermal conditions and possibly a more concentrated NaOH solution.

Another potential advantage of the NaOH leach is that the radioactive lead in the residue is put into solution along with Na_2SiO_3. If a set of conditions could be found for precipitating Pb_2SiO_7 or a similar material from this liquor, the mother liquor could be recycled directly to the NaOH leach, thus reducing the requirements of makeup NaOH and the acid required to neutralize waste NaOH in a treatment system. In addition, the resulting insoluble lead compound could be stored as is or incorporated into fused glass blocks for safe long term (100-200 years) storage. The necessary leaching and precipitation conditions--a combination of temperature, pressure, pH, oxidizing potential and/or other variables--should be determined in the laboratory. If conditions for precipitation of an insoluble lead silicate compound are successfully established, incorporation of the material into glass should be studied as well.

Once a method for PbO and SiO_2 precipitation and NaOH liquor recycle has been developed, the caustic leaching method could be used as part of a number of possible residue treatment schemes. It could replace the brine leach in the Hazen Process, for example, if better recovery of metals from the sand fraction of the residue is desired. Further application of this process step will be discussed in the next section.

Process Selection

The objectives for a residue treatment process have been noted in the Introduction to this alternative evaluation. It is obvious from the foregoing analysis that none of the processes proposed to date meets all of the requirements for fulfilling these objectives. The purpose of this section is to select a set of processing steps from all of those which have been proposed, singly or as parts of integrated processes, which come as close as possible to fulfilling the residue treatment objectives.

Since cost is a consideration in process selection, the residue might first be thought of in terms of relatively low and relatively high treatment cost fractions. The slimes fraction (-400 mesh) should be considerably less expensive to treat for metals extraction than the sand fraction since the sand contains minerals refractory to leaching. From a cost standpoint, the ideal approach to residue treatment would be to return the refractory sand fraction to nature in a form similar to that in which it was removed during mining. The environmental impact of such action should be minimal since the mineral composition would not have been changed significantly by sulfuric acid leaching for uranium extraction. Whether this approach to disposition of the sand fraction can be used depends on regulatory considerations and on a chemical analysis of the sand material—not available at this time—to be certain that no valuable metals are concentrated in it.

If it happens that the sand fraction can be disposed of as a natural material without treatment, the slimes could be treated by relatively mild means such as salt or dilute acid leaches. On the other hand, the need to treat the sand fraction as well would require much more aggressive conditions such as NaOH pressure leaching to attack refractory minerals.

Treatment of Slimes Fraction with Disposal of Sand

In a previous section it was mentioned that a conflict exists in published data on salt leaching of residue. Several researchers reported

dissolving barium and radium from sulfate residue with a brine leach and obtaining high (∿92 percent) extraction. Hazen Research, on the other hand, claimed that salt leach for radioactive recovery dissolved less than 0.3 percent of the radium present. This conflict could have been caused by an error by one or more of the researchers in the area, by differences in feed residue characteristics, or by a phenomenon whereby the lead dissolves before any radium or barium. If the latter could be shown to be the case, the phenomenon could be used to design a very simple leach circuit using mostly recyclable reagents. To circumvent the problem of excessive liquor requirements cited by most workers in the field, a system for recycling of brine would have to be developed. An overall flowsheet for such a brine leach process would look something like Figure A-6.

Both brine leaches would be multi-stage, perhaps countercurrent operations. Conditions for the first brine leach for lead extraction have been established to at least a preliminary degree by Hazen's work--three stages at 80°C, countercurrent, at a pH of 2, less than 33 percent solids, and about 300 g NaCl per liter of brine. These conditions should be verified and, if possible, improved upon by use of higher temperatures or other changes.

The brine leach for radium and barium extractions needs to be verified in the laboratory. More severe leaching conditions may be necessary to obtain good radium extraction. Indeed, it may even be found that a brine leach will not dissolve radium from the K-65 residue, unlike the residues tested by other researchers noted earlier. The effect of lime addition for sulfate removal from the ion exchange raffinate on the effectiveness of brine leaching and ion exchange needs to be determined. An optimum point in the process for the sulfate removal must be found as well as conditions for the sulfate precipitation. If all of the above steps are verified in the laboratory, the integrated process would need to be tested on a laboratory scale to verify that all steps are compatible and the process objectives are fulfilled.

If it should turn out that the second brine leach is incapable of extracting radium to an acceptable degree, the second half of the flowsheet of Figure A-1 could be changed to accomodate a more powerful direct leaching circuit. The most likely reagent to succeed in extracting radium

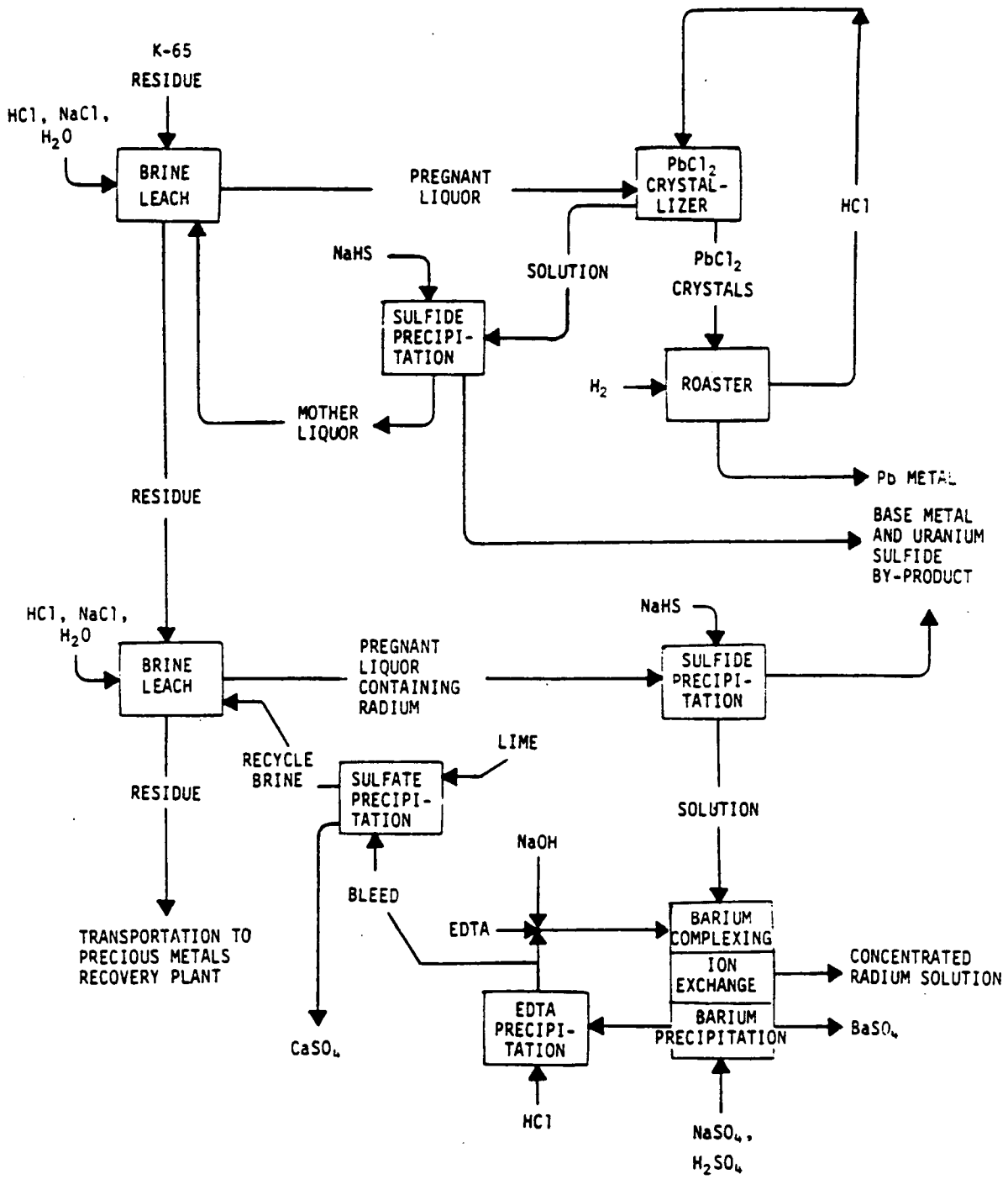

FIGURE A-6. CONCEPTUAL FLOWSHEET FOR BRINE LEACH PROCESS

from the residue without a preliminary metathesis is nitric acid, according to the Oak Ridge (Rawlings, 1951) work noted in a previous section. Figure A-7 shows such a modified flowsheet.

As in the case of the brine leach process, the nitric acid process would require some laboratory verification and development. Acceptable extraction of radium from the first brine leach residue by nitric acid must be confirmed. There may be a problem with precipitation of uranium and base metal sulfides from nitrate solution which needs to be explored. The usefulness of the ion exchange system in nitrate solution must be examined as well as the fate of sulfate in the nitric acid leach, sulfide precipitation, and ion exchange processing. If sulfate remains in solution through the ion exchange step, a method for sulfate removal without neutralization of HNO_3 must be developed--such as the evaporation/oxidizing roast step included in Figure A-7--before HNO_3 recycle can be used. Finally, as with the brine leach system, the entire integrated process should be tested on a laboratory scale to confirm that the various process steps are compatible and that performance will not deteriorate with recycle of reagents.

If it is found that the presence of sulfate in the residue after lead extraction makes impractical the extraction of radium by brine or nitric acid leaching, a metathesis step prior to leaching will have to be considered. The major problem associated with the metathesis of sulfates to carbonates using Na_2CO_3 is the great excess of Na_2CO_3 required and the lack of recycling technology. This poses both a reagent cost problem and a waste liquor disposal problem. Thus, in the event that metathesis is shown to be necessary, an attempt should be made to develop a process for recycle of the carbonate.

One potential method for recycling the Na_2CO_3 liquor would be to precipitate the sulfate and carbonate from the solution as $CaSO_4$ and $CaCO_3$ using lime. The mother liquor from the precipitation would be a NaOH solution. The mixed sulfate and carbonate precipitate could be roasted at 900-1000°C to drive off CO_2 from the carbonate for recycle to the mother liquor, forming a regenerated Na_2CO_3 solution. Roasting of the precipitate would produce a CaO and $CaSO_4$ mixture which could be used for the lime addition to the carbonate/sulfate liquor. A bleed stream of unroasted $CaCO_3$ and $CaSO_4$ precipitate to waste disposal would prevent buildup of sulfate beyond an established limit. Figure A-8 summarizes this process.

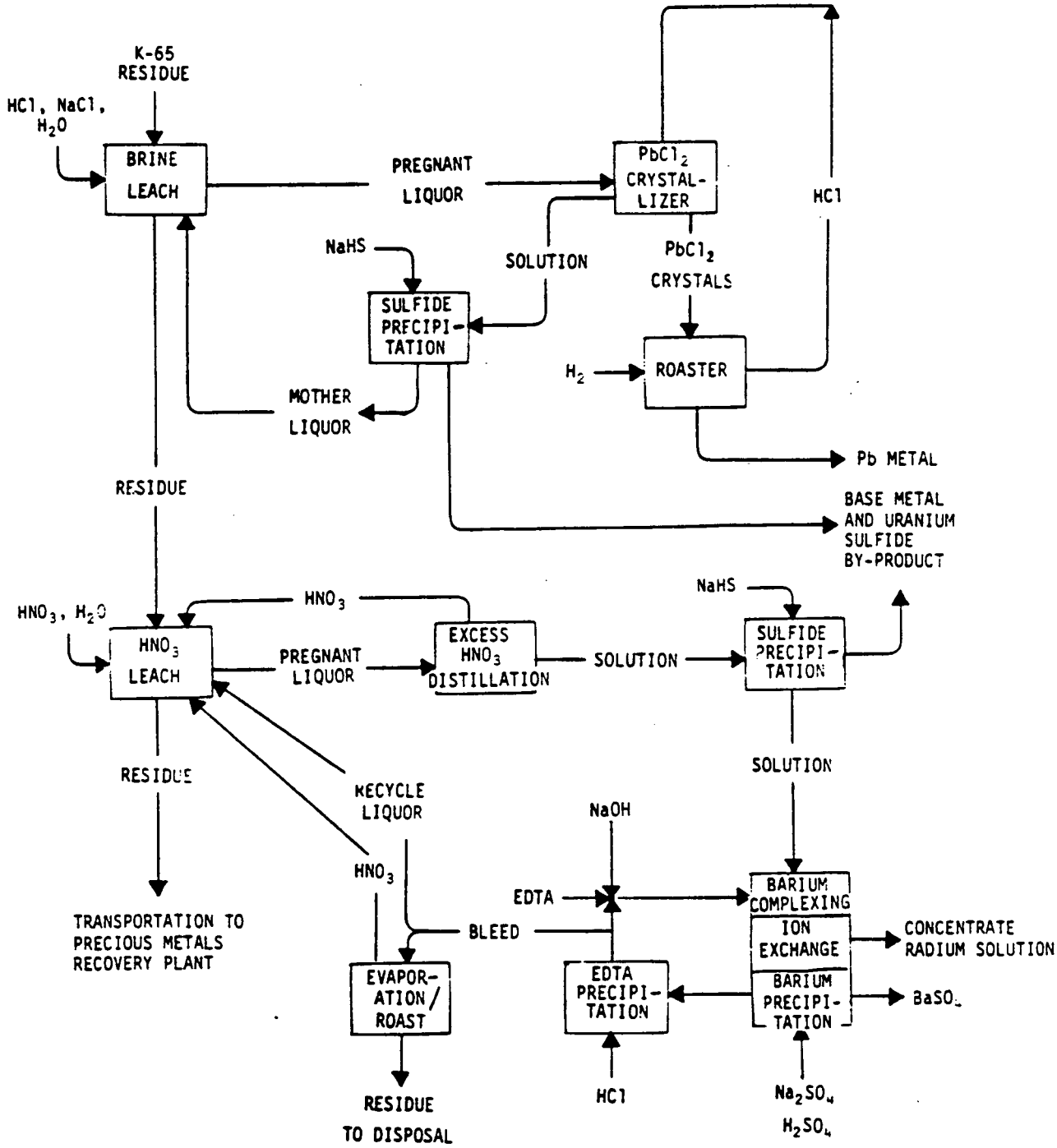

FIGURE A-7. CONCEPTUAL FLOWSHEET FOR NITRIC ACID LEACH PROCESS

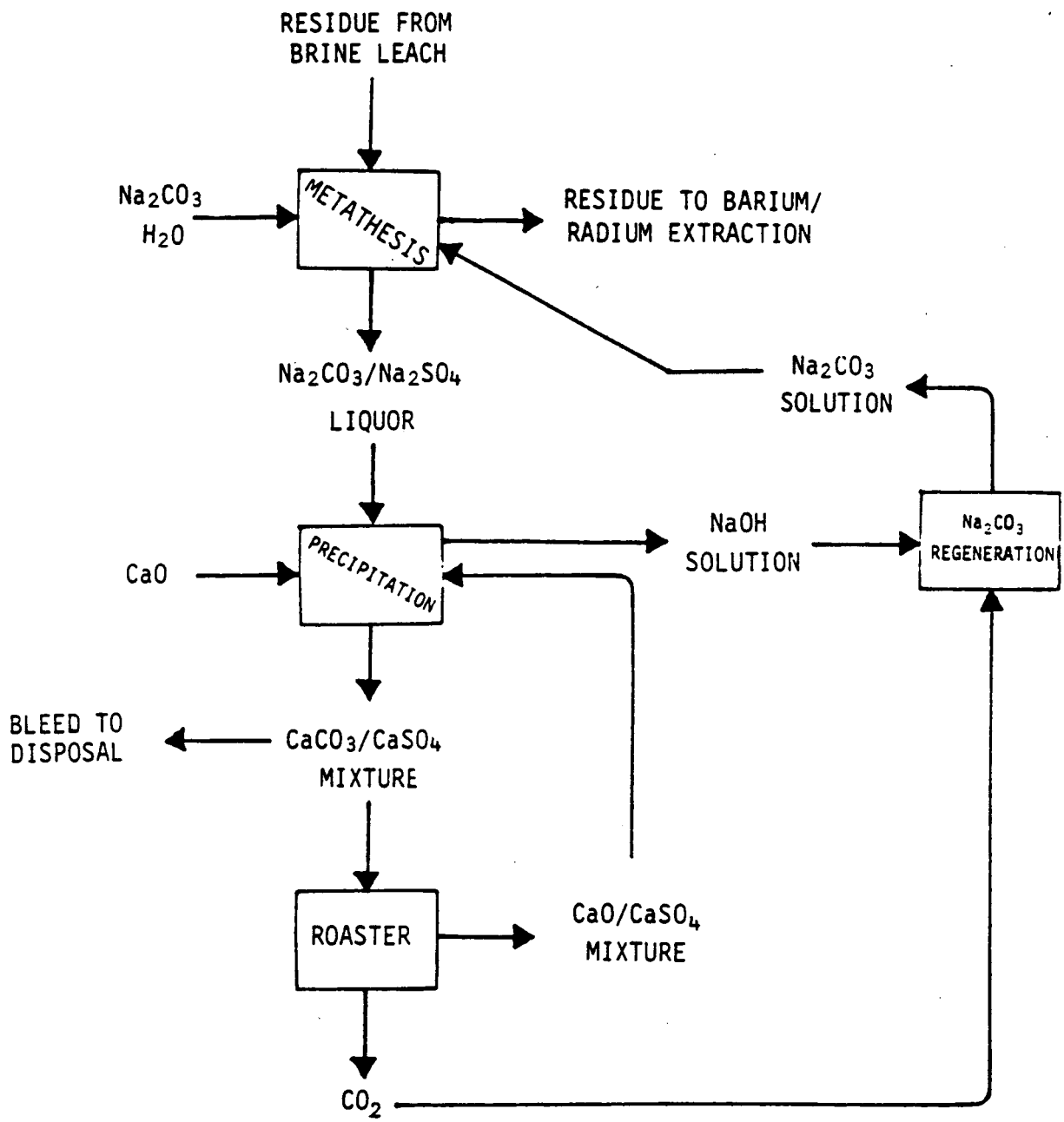

FIGURE A-8. RECYCLE OF METATHESIS LIQUOR

Energy problems of roasting the wet $CaCO_3/CaSO_4$ mixture would be minimized by using a countercurrent rotary kiln roasting system with the steam, CO_2, and combustion exhaust pre-heating the roaster feed. In addition, the endothermic $CaCO_3$ calcination reaction would be counteracted by the exothermic Na_2CO_3 regeneration, the heat from which would be used in the metathesis reactor. This entire concept, of course, needs to be proven in the laboratory and optimum sulfate level (and thus bleed rate) in the $CaO/CaSO_4$ recycle determined.

In the metathesis step itself, there are tradeoffs between operation at ambient pressure and temperatures below 100°C and operation at higher temperature and pressure (Hazen versus Mound processes). The potential savings in residence time with pressure processing should be quantified through laboratory study so a comparison of process economics between the two modes of operation can be made.

Treatment of Total Residues, Including Sand Fraction

If it is decided that the sand fraction of the residue must also be treated, a more aggressive treatment will be necessary to attack the refractory minerals. The first thing to be tried for treatment of residue including the coarse, refractory minerals should be grinding of the sand fraction and leaching with brine or nitric acid as discussed above for the slimes fraction. If such treatment proves sufficient for radium, uranium and base metal extraction, one of the process schemes discussed above could be used for the entire residue following a grinding step.

In the event that grinding does not render the sand fraction amenable to treatment by brine or acid leaching, a more aggressive treatment will be required. Dissolution of the silicate matrix itself would free the radium and other metals for dissolution in subsequent steps. This dissolution is best carried out by a caustic (NaOH) leach, either near the boiling point of the leachant or at higher temperatures and pressure. Milling the residue may allow the use of a relatively low temperature and pressure. Whether the leach uses ambient or higher pressure conditions, the flowsheet in Figure A-9 exemplifies the type of process which might be employed.

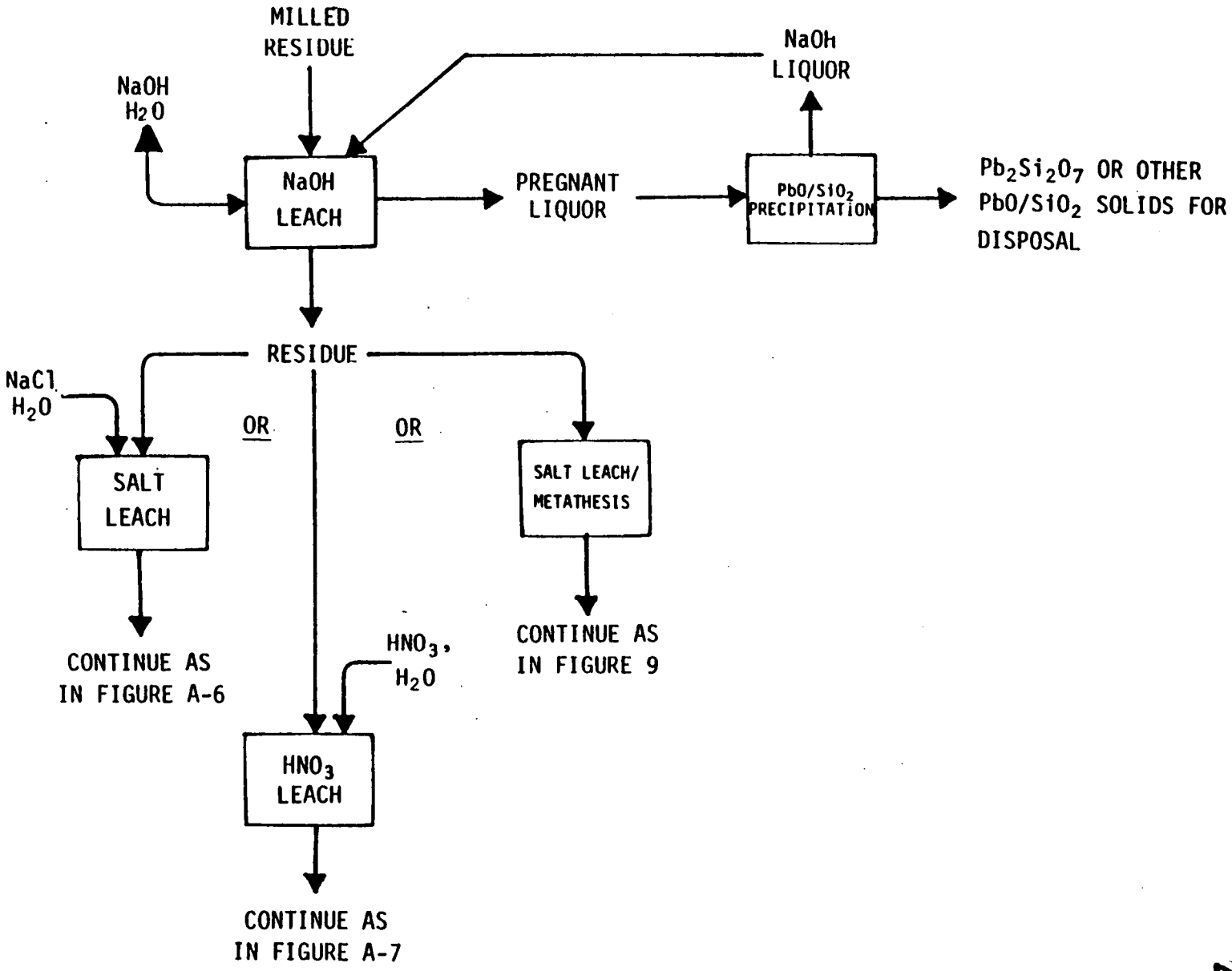

FIGURE A-9. NaOH LEACH OF RESIDUE

Recycle of the caustic leachant by precipitation of some PbO/SiO_2 mixed oxide material could be developed as noted in the section on the Mound process. The lead-silica removal would soften up the residue for recovery of other metals in subsequent steps. Figure A-9 presents several treatment options similar to those suggested for treatement of the slimes fraction alone. Development of the subsequent processing should proceed as outlined in the discussion on slimes processing.

Conclusions on Process Selection

If it is determined, on the basis of safety considerations and analysis of the coarse sand fraction of the residue for valuable metals, that the sand fraction can be disposed of on land or underground, the slime fraction can be treated by a less aggressive means than would otherwise be necessary. The potential treatment options are, in increasing order of complexity, the following:

- Simple two-stage brine leach for separate lead and radium extraction with liquor recycling scheme to be developed.
- Brine leach for lead extraction followed by nitric acid leach for removal of radium and other metals.
- Either of the two options above with a metathesis step inserted between the extraction stages to convert sulfates to carbonates.

Each of these systems would require laboratory verification of the feasibility of the extraction steps themselves. In addition, each has liquor recycle needs to which a process development effort would have to be addressed. Some of the possible recycle methods are discussed above.

If it is determined that the sand fraction of the residue must be treated along with the slime fraction, a more aggressive extraction scheme will be necessary. Two basic options are presented, as follows:

- Grind the sand fraction to a fine particle size (e.g., 325 mesh) and treat as slime using one of the above options for slime metals extraction.

- Leach the entire residue, including the sand fraction, in a NaOH leach under conditions which will solubilize much of the silica and lead. Follow up the caustic leach with one of the slime treatment schemes discussed previously, since the sand material would have been "opened up" by the caustic leach.

The latter alternative, necessary if simple grinding does not render the sand leachable along with slime, requires development of a liquor recycle method. One such method could be hydrothermal precipitation of a mixed lead/silicon oxide as discussed above and shown in Figure 10.

PROCESS ALTERNATIVES CONCLUSIONS

A review of the various work reported in the literature on treatment of pitchblende leaching residues has revealed that no integrated process has yet been developed to the point at which it would be appropriate to scale-up. The Mound Process (Rawlings, 1951) uses earlier technology and has only the objective of recovering radium as a product while discarding the truly valuable constituents. The Hazen Process comes closest to the ideal of readiness for scale-up but would still require some further development work and has some unanswered questions such as the fate of certain large volume waste streams. Assuming that these problems could be solved without adding significantly to the capital and operating costs of a pilot-scale plant proposed by Hazen (Litz, 1974), the economics of such a plant would appear to be favorable due to the dramatic increase in the value of potential by-products since the Hazen Report was written.

An alternative approach to the problem would be the development of a new process employing features from the works of Rawlings [(1951) Mound Laboratory], Litz [(1974) Hazen Research, Inc.], Borrowman and Brooks [(1975) Bureau of Mines], and Seeley [(1977) Oak Ridge]. One series of development options has been suggested in this report in the section entitled "Process Selection". This series is based on the need to

find the mildest (lowest cost) treatment conditions necessary to produce a low radium content residue and a high radium concentrate for separate disposal with treatment cost being at least offset by the value of by-products.

The lowest cost treatment would be available if it were decided to dispose of the sand fraction of the K-65 residues underground as a natural material which has not been made more hazardous by processing. In this case, the less refractory slimes fraction would be treated alone by the least severe conditions needed. A ranking of the options in increasing order of severity (and cost) has been included in the report. If, on the other hand, it is decided that the sand fraction must also be treated with the slimes fraction, higher cost options would be necessary to obtain the same level of freedom from radium in the residue. It appears unrealistic to expect the Hazen Process, for example, to leach enough radium from refractory sand to result in a residue containing anywhere near 20 pCi/g radium. Thus, a pretreatment would certainly be required, ranging from the simple expedient of grinding to caustic pressure leaching. As in the case of slimes-only treatment, the least severe necessary combination of pretreatment and treatment should be discovered through experimentation.

Even assuming radium extraction would not be necessary for recovery of uranium and/or metals from the other residues, it would have to be carefully considered from an economic standpoint. Total uranium approximates 6-10 tons in the K-65 residues and 16-18 tons in the other Afrimet residues. At a return of $30/lb, the value of these residues would approximate $1.3-1.7 million. While this value would not yield a profit to DOE, it certainly could be used to defray some of the costs of waste management and reduce ultimate waste disposal needs. The concentrations of precious metals in the residues are quite low and it seems a significant cost recovery from their isolation would be improbable.