G-000-705.49

4448

TRANSMITTAL OF REVISED CLOSURE PLAN INFORMATION AND DATA FOR THE HYDROFLUORIC ACID TANK CAR, HAZARDOUS WASTE MANAGEMENT UNIT NO. 38 (HWMU NO. 38)

05/28/93

DOE-FN/OEPA
DOE-2094-93
11
LETTER

Department of Energy
Fernald Environmental Management Project
P.O. Box 398705
Cincinnati, Ohio 45239-8705
(513) 738-6357

4448

MAY 28 1993
DOE-2094-93

Mr. Tom Crepeau, Manager
Ohio Environmental Protection Agency
Division of Hazardous Waste Management
Data Management Section
P.O. Box 1049
1800 WaterMark Drive
Columbus, Ohio 43266-0149

Dear Mr. Crepeau:

TRANSMITTAL OF REVISED CLOSURE PLAN INFORMATION AND DATA FOR THE HYDROFLUORIC ACID TANK CAR, HAZARDOUS WASTE MANAGEMENT UNIT NO. 38 (HWMU NO. 38)

References: 1. Letter, DOE-0831-93, James J. Fiore to Tom Crepeau, "Hydrofluoric Acid Tank Car Closure Plan Information and Data Notice of Deficiencies," dated January 13, 1993.

2. Letter, Donald R. Schregardus to W. D. Adams, OH6 890 008 976, 05-31-0681, RE: Closure Plan, U.S. Department of Energy - Fernald Environmental Management Project, dated December 9, 1992.

Enclosed is a copy of the modified Closure Plan Information and Data (CPID) for the Hydrofluoric Acid (HF) Tank Car, Hazardous Waste Management Unit No. 38 (HWMU No. 38) at the Fernald Environmental Management Project (FEMP). The CPID document was prepared to replace the previous CPID submitted to the Ohio Environmental Protection Agency (OEPA) on May 7, 1992.

The DOE response (Reference 1) to the OEPA Notice of Deficiency (NOD) (Reference 2) stipulated that a revised CPID would be submitted pending the investigation of on-site and off-site treatment options. The off-site treatment option has been eliminated based on discussions with commercial vendors. Four on-site treatment options are currently being investigated. Bench scale testing and analyses are being developed to determine which on-site treatment option will be selected. The four neutralization processes undergoing bench scale testing and analyses include:

1. Lime Slurry - Elementary Neutralization

2. Activated Alumina/Ion Exchange Neutralization

Recycled and Recyclable

01

3. Soda Ash Addition Neutralization

4. Nitric Acid Addition/Lime Slurry Neutralization

A brief narrative and equipment schematic or simplified flow diagram for each neutralization process is also enclosed with this letter.

In the DOE response to the NOD comments, the nitric acid addition/lime slurry neutralization was the only on-site treatment process identified. After further investigation, it was decided that the three other alternatives also warranted evaluation through bench scale testing and analyses. The enclosed CPID only discusses the first option, Lime Slurry - Elementary Neutralization, as the anticipated best process for neutralizing the hydrofluoric acid. However, if option no. 1 is not used, OEPA will be notified and provided with details on the alternative option selected.

The treatment option ultimately selected will be the method that can provide the most practical and safe treatment. The criteria for practical treatment includes the generation of non-hazardous treatment products that can be discharged to the FEMP wastewater treatment system (WWTS) or dispositioned as low level radioactive wastes or non-radioactive solid wastes.

If you or your staff have any questions concerning the discussions in this letter, our point of contact is John Sattler at (513) 648-3145.

Sincerely,

Walter J. Quader for

Thomas J. Rowland
Acting Manager

FN:Sattler

Enclosure: As Stated

cc:

D. R. Schregardus, OEPA-Columbus
G. E. Mitchell, OEPA-Dayton
P. D. Pardi, OEPA-Dayton
J. A. Saric, USEPA Region V
K. A. Hayes, EM-424 TREV

06

cc w/o encl:

R. Meyer, OEPA-Columbus
R. Fisher, OEPA-Dayton
H. O'Connell, OEPA-Dayton
M. McDermontt, DOJ
J. Van Kley, Ohio AGO
N. C. Kaufman, FERMCO/1
K. L. Alkema, FERMCO/65-2
P. F. Clay, FERMCO/19
J. T. Curtis, FERMCO/8
J. W. Theising, FERMCO/19
Administrative Record

ENCLOSURE

NEUTRALIZATION METHODS TO BE EVALUATED BY BENCH SCALE TESTING

The FEMP is developing bench scale tests to evaluate and identify which of four (4) suggested methods can safely achieve the required neutralization and generates the least volume of waste. The four neutralization processes undergoing bench scale testing and analyses include:

1. Lime Slurry - Elementary Neutralization (Figure 1)
2. Activated Alumina/Ion Exchange Neutralization (Figure 2)
3. Soda Ash Addition Neutralization (Figure 3)
4. Nitric Acid Addition/Lime Slurry Neutralization (Figure 4)

The information to be collected for each of the options includes:

- Rate of heat build up and gas or steam evolution.
- Effectiveness of fluoride removal as calcium fluoride, sodium fluoride or aluminum fluoride salts.
- Sizing and equipment requirements for the alternative methods being evaluated.
- Ratio of neutralizing agent to additions of DHF solution and the respective input rates.
- Estimated time required to complete neutralization of the full 4,400 gallons of DHF.
- Characterization of solid and liquid wastes, to be determined by sampling and analyses of filtered solids and wastewater effluent. Analyses will be used to characterize Ph changes and fluoride concentrations during the process.
- The final effluent and solid residues will be sampled and analyzed to characterize concentrations of RCRA TCLP metals, total uranium and soluble fluoride to confirm options for disposition of wastes generated during DHF neutralization.

The following pages provide a brief narrative of the options being evaluated.

OPTION 1: LIME SLURRY - ELEMENTARY NEUTRALIZATION (FIGURE 1)

1) The following formula describes the reaction of lime, a base, with hydrofluoric acid:

$$Ca(OH)_2 + 2HF - CaF_2 \downarrow + 2H_2O$$

2) In this process, the DHF will be added to a dilute lime slurry, causing the precipitation of calcium fluoride as an inert, non-hazardous solid.

3) The neutralization process will take place at the rail car secondary containment pit west of the Tank Farm (Figure 5). Lime slurry will be located near the containment pit to assure immediate response in the event of any possible spills or other releases of DHF.

4) The lime slurry will be added, at a controlled rate, to one of the two stainless steel reactors (Reactor "B") located adjacent to the containment pit. Each reactor has a 5800 gallon capacity and is equipped with an agitator. The recirculated stream will then be pumped via a large capacity pump (~250 gpm) from the reactor to a hydroclone which will separate the more readily settled solids.

5) The recirculated stream from the hydroclone will pass through a heat exchanger to remove excess heat from the solution and then return to Reactor "A".

6) Adding the DHF solution from the tank car into Reactor "A" containing the lime slurry, forms a calcium fluoride precipitate. The rate of addition, and thereby the rate of reaction, will be controlled by air pressure applied to the diaphragm pump which will be located on top of the tank car. The transfer from the tank car will be made using the tank car dip tube, a diaphragm pump and a transfer line to Reactor "A". The pump and transfer line will be constructed with HF compatible materials.

7) The discharge of the DHF transfer line should extend into the reactor tank, nearly to the bottom. The recycled flow should also extend to the bottom of Reactor "A", to allow thorough mixing for the ~20 minute retention time before overflowing into Reactor "B".

8) For safety reasons, the addition of DHF will only be conducted during daylight hours. However, the recycle flow and agitation of the reactors will be maintained continuously in order to minimize settling and/or scaling problems.

9) The solids that settle out of the hydroclone and the spent lime slurry will be transferred to plant 8. The slurry will be filtered, dried and drummed. The filter cake will be analyzed for RCRA TCLP metals and radiological contamination. The filtrate will be analyzed for RCRA TCLP Metals, radiological contamination,

fluorides and Ph.

10) If the filtrate meets NPDES and local water quality discharge criteria, it will then be discharged to the general sump for eventual disposal, through the biodenitrification facility (BDN), to the Great Miami River.

11) The filter cake, pending analysis, will be disposed at the Nevada Test Site (NTS) as a low level radioactive waste (LLW).

OPTION 2: NEUTRALIZATION/ION EXCHANGE USING ACTIVATED ALUMINA (Figure 2)

1) The following formula describes the reaction of activated alumina (AA) with hydrofluoric acid:

$$Al_2O_3 + 6HF - 2AlF_3 + 3H_2O$$

2) The DHF will be pumped through a tank of activated alumina which will adsorb and react with the acid to "give-up" an oxygen ion in exchange for a fluoride ion.

3) The spent AA will be dried or run through a filter press, drummed and sampled. At this time it is anticipated that the resulting dried cake would be disposed of as a non-RCRA low level radioactive waste.

OPTION 3: NEUTRALIZATION/SOLIDIFICATION WITH SODA ASH (Figure 3)

1) The following formula describes the reaction of hydrofluoric acid with soda ash:

$$2HF + Na_2CO_3 - 2NaF + CO_2 \uparrow + H_2O$$

2) The DHF will be pumped into a tank containing a paste-like slurry of soda ash and recirculated in a closed loop via an in-line mixer until the pH approaches 7.

3) The neutralized slurry paste will be pumped into a drum containing a heal of dry soda ash and covered with a dry soda ash layer. Once dried (i.e., no free liquids as demonstrated by the paint filter test) the drums will be shipped to the NTS for LLW disposal.

OPTION 4: TWO-STAGE TREATMENT AND NEUTRALIZATION USING NITRIC ACID/LIME SLURRY (Figure 4)

1) The following formula describes the reaction of lime, a base, with nitric acid:

$$Ca(OH)_2 + 2HNO_3 \rightarrow Ca(NO_3)_2 + 2H_2O$$

2) The second step of adding hydrofluoric acid to the calcium nitrate solution is described by the following formula:

$$Ca(NO_3)_2 + 2HF \rightarrow CaF_2 \downarrow + 2HNO_3$$

3) The hydrofluoric acid is introduced into a tank containing a solution of calcium nitrate to precipitate out calcium fluoride.

4) The "regenerated" nitric acid will be neutralized in lime slurry (see option 1) or processed through the uranyl nitrate (UNH) treatment system.

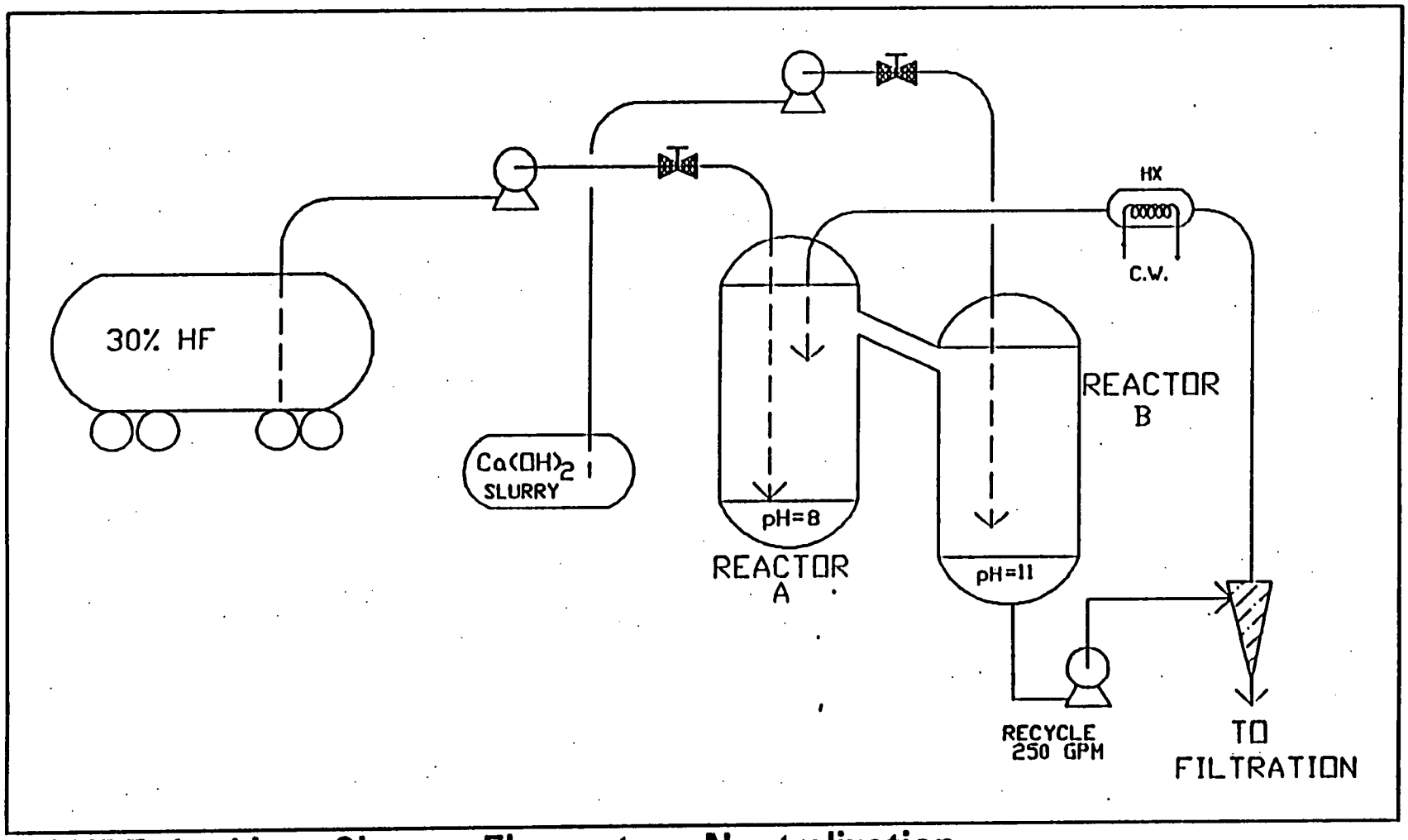

FIGURE 1: Lime Slurry - Elementary Neutralization

GRANULAR ACTIVATED ALUMINA

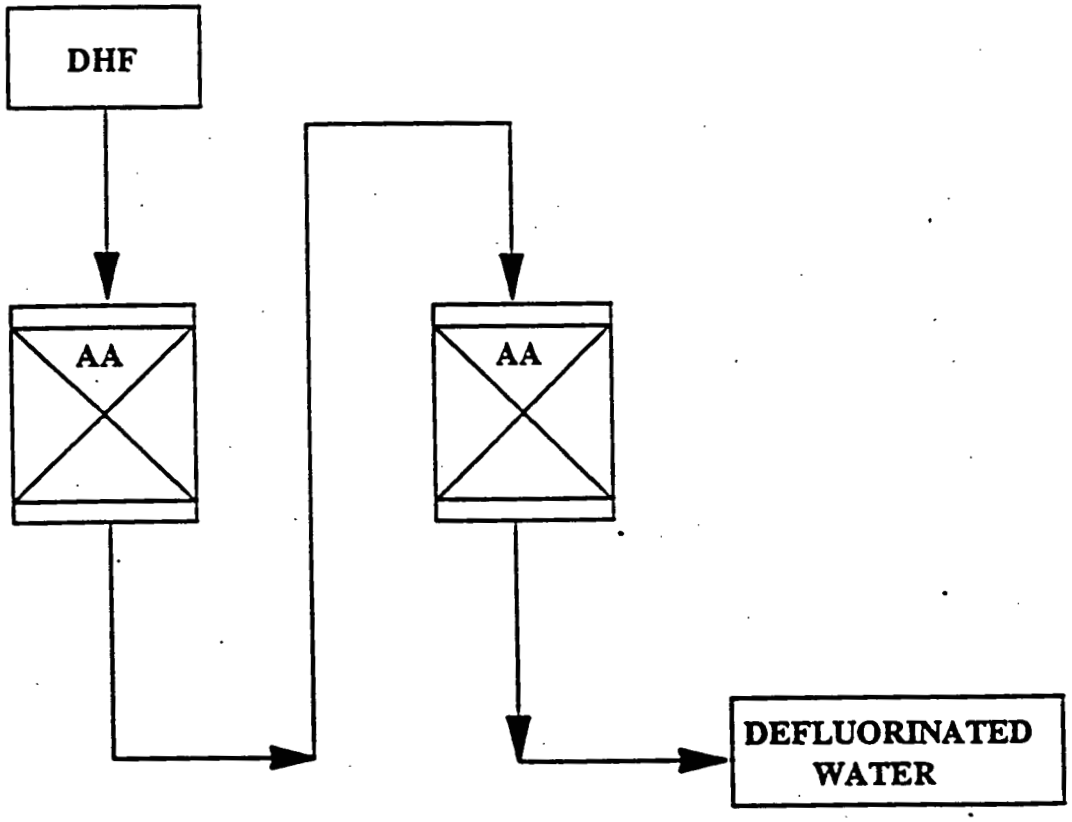

DEFLUORINATORS

NOTES

1) AA - VIRGIN GRANULAR ACTIVATED ALUMINA.
2) WHEN SPENT, AA BECOMES AlF_3

FIGURE 2 - Activated Alumina/Ion Exchange Neutralization

TANK CAR HF - NEUTRALIZATION FLOWSHEET

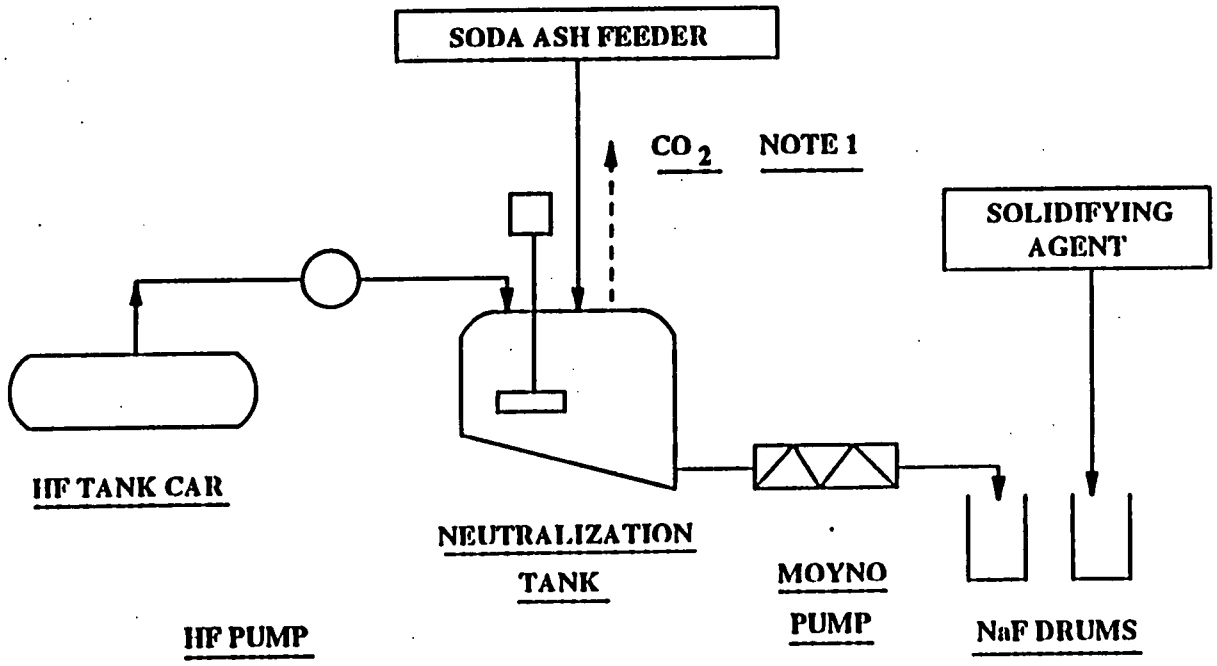

NOTE:

1 - Filter to be provided, as required.

FIGURE 3: Soda Ash Addition Neutralization

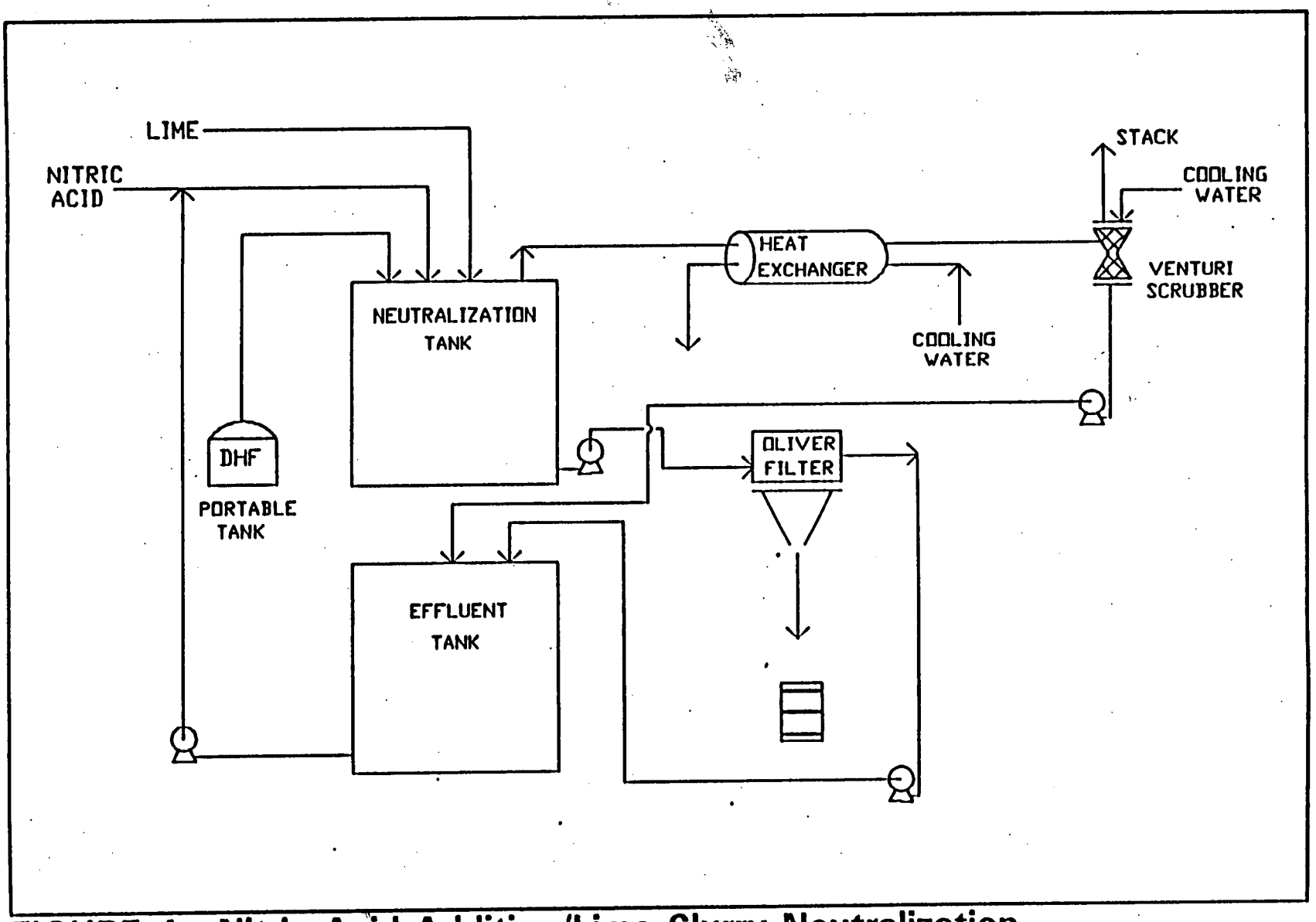

FIGURE 4: Nitric Acid Addition/Lime Slurry Neutralization