U-006-307.20

4943

TREATMENT OF PITCHBLENDE RESIDUES FOR RECOVERY OF METAL VALUES (JOHN E. LITS)

05/30/74

HAZEN RESEARCH/COTTER CORP
30
REPORT
OU4

REPORTS LIBRARY,
NLO, INC.

JAN 18 1984

4943
K976
cy (1)

HAZEN RESEARCH, INC.

4601 INDIANA STREET
GOLDEN, COLORADO • 80401
TELEPHONE 303/279-4501

HRI Project No. 1373
Copy No. 5

Copy of original document located in FEMP Archives.

TREATMENT OF PITCHBLENDE RESIDUES FOR RECOVERY OF METAL VALUES

for

Cotter Corporation
P. O. Box 751
Canon City, Colorado 81212

May 30, 1974

Copy of original document located in FEMP Archives.

By:

John E. Litz
Senior Research Engineer

Approved by:

Ralph H. Light
Vice President

TABLE OF CONTENTS

	Page No.
Introduction and Summary	1
Material Balance for Chemical Treatment	6
Economic Analysis of Chemical Treatment	10
Capital Cost	10
Operating Cost	13
By-Product Income	14
Economic Balance	15
Recovery of Values	16
Mercury Amalgamation	16
Acid Leaching	17
Cyanide Leaching	18
Concentration of Radium	19
Sizing of Residues	19
Flotation	20
Radium Recovery by Chemical Treatment	22
Brine Leaching	23
Sulfide Precipitation	25
Metathesis	25
Hydrochloric Acid Leaching	28
Barium-Radium Ion Exchange and Recovery	30
Appendix	

INTRODUCTION AND SUMMARY

In May of 1973, Hazen Research, Inc., was requested by the Cotter Corporation to study the recovery of the values remaining in samples of pitchblende residues from Lewiston, New York and Fernald, Ohio. Values of interest were gold, platinum, palladium, copper, cobalt, nickel, and uranium. The samples had the following analysis:

Element	Lewiston L-30 waste Building 411	- - Fernald - - Silo 1	Silo 2
Gold, oz/ton	0.023	2.1	2.5
Platinum, oz/ton	0.006	0.044	0.029
Palladium, oz/ton	0.20	0.44	0.58
Silver, oz/ton			0.58
Copper, %	0.11	0.05	0.08
Cobalt, %	0.26	0.16	0.20
Nickel, %	0.62	0.37	0.35
Uranium, %	0.083	0.18	0.32
Lead, %	0.76	7	6
Barium, %	0.19	5	5
Iron, %	6.6	1.8	1.3
Radium, ppb	2	360	280

The low barium and radium content of the Building 411 sample would indicate that the radium which had dissolved during nitric acid leaching had been precipitated separately and was not included with the ore tails as in the Fernald samples. This was also evident since the Building 411 sample was a dark red brown and contained numerous large granitic fragments, and had a relatively small amount of fines. The Fernald samples were nearly all minus 65-mesh with a large

amount of the sample being 5-micron precipitated particles. Much of the gold present in each of the samples was present as metal.

The preliminary studies included amalgamation, cyanide leaching, and acid leaching with sulfuric, nitric, or hyrochloric acids. Amalgamation extracted from 0 to 80% of the precious metals. Cyanide leaching dissolved from 0 to 93% of the precious metals. Acid leaching did not attack the gold, but did solubilize up to 60% of the palladium. Solubilities of the uranium, copper, cobalt, and nickel ranged up to 89%.

Since there were a number of cyanide consumers in the Fernald materials, sulfuric acid leaching followed by cyanide leaching was evaluated for extraction of the values. The sulfuric acid leach (80°C, 1.1 pH, 22 hours, 25% solids) dissolved from 73 to 80% of the uranium, copper, nickel, and cobalt. About 6% of the silver dissolved and none of the other precious metals were attacked. Cyanide leaching of the acid leach residues dissolved 79% of the gold, 66% of the palladium, 33% of the platinum, and 53% of the silver.

In November of 1973, Cotter Corporation requested that emphasis be placed on separating the radium into a more highly concentrated form than was present in the total residue. The above tests did not dissolve any of the radium contained in the residues nor was there a significant weight loss to concentrate the radium in the leach solids.

The leach residues from Fernald contained 94% of their radium content in the minus 400-mesh fraction. This fraction, however, was 73% of the residue weight. Therefore, significant concentration could not be made by separating the fines.

X-ray diffraction analysis of the Fernald residues indicated only quartz and barium silicates as readily identifiable species. The barium is also present as barium, lead, radium sulfate precipitate. The residues

contain about 60% silica with the balance being the precipitated sulfates. Froth flotation was investigated as a method of concentrating the sulfate precipitate. The flotation tests included both sulfidization of the lead with flotation using a xanthate and a barite-type flotation using oleic acid. In both cases it was possible to produce concentrates containing about two-thirds of the radium in about one-third of the feed weight. A combination of wet screening, oleic acid flotation, and desliming of the flotation tails could recover 93% of the radium in 66% of the weight. This was not a significant concentration, and about 40 ppb radium remained in the tailings fraction.

Chemical treatment with resolubilization of the radium appeared to be the only practical method of separating the radium from the bulk of the residue. A process was evaluated where the residue was treated with brine to solubilize the lead sulfate as chloride. The brine residue was digested with sodium carbonate to metathesize the barium and radium sulfates to the corresponding carbonates. The carbonates were leached with hydrochloric acid to dissolve the barium and radium. The acid leach solution would contain over 100,000 parts barium for each part of radium. Therefore, a sulfate precipitate would contain a maximum of 6 parts per million radium. The precipitate weight would be from 5 to 10% of the original residue weight. Presumably this would not be an adequate concentration of the radium and it would be necessary to improve the radium to barium ratio. An ion exchange method to do this using ethylene diammine tetraacetic acid has been patented by the United States Atomic Energy Commission.

A flowsheet, Figure 1, has been developed and a tentative material balance has been made using the above chemical treatment system. Approximately 90% of the lead can be removed in the brine leach. This lead can be recovered as the chloride and would serve as a source material for polonium. Some of the uranium and base metal values are also dissolved in the brine and may be recovered. Little besides a small amount of silica is dissolved in the sodium carbonate metathesis. The hydrochloric acid leach dissolves up to 96% of the barium and radium. The final leach residue amounts to about 50% of the feed weight and 4% of the radium. Recycling of this residue through the process should permit dissolution of the balance of the radium with only a minor loss in weight. Also, it should be possible to recover the majority of the precious metals by cyanide leaching of the final residues.

FLOWSHEET TO REMOVE AND RECOVER RADIUM FROM PITCHBLEND RESIDUES

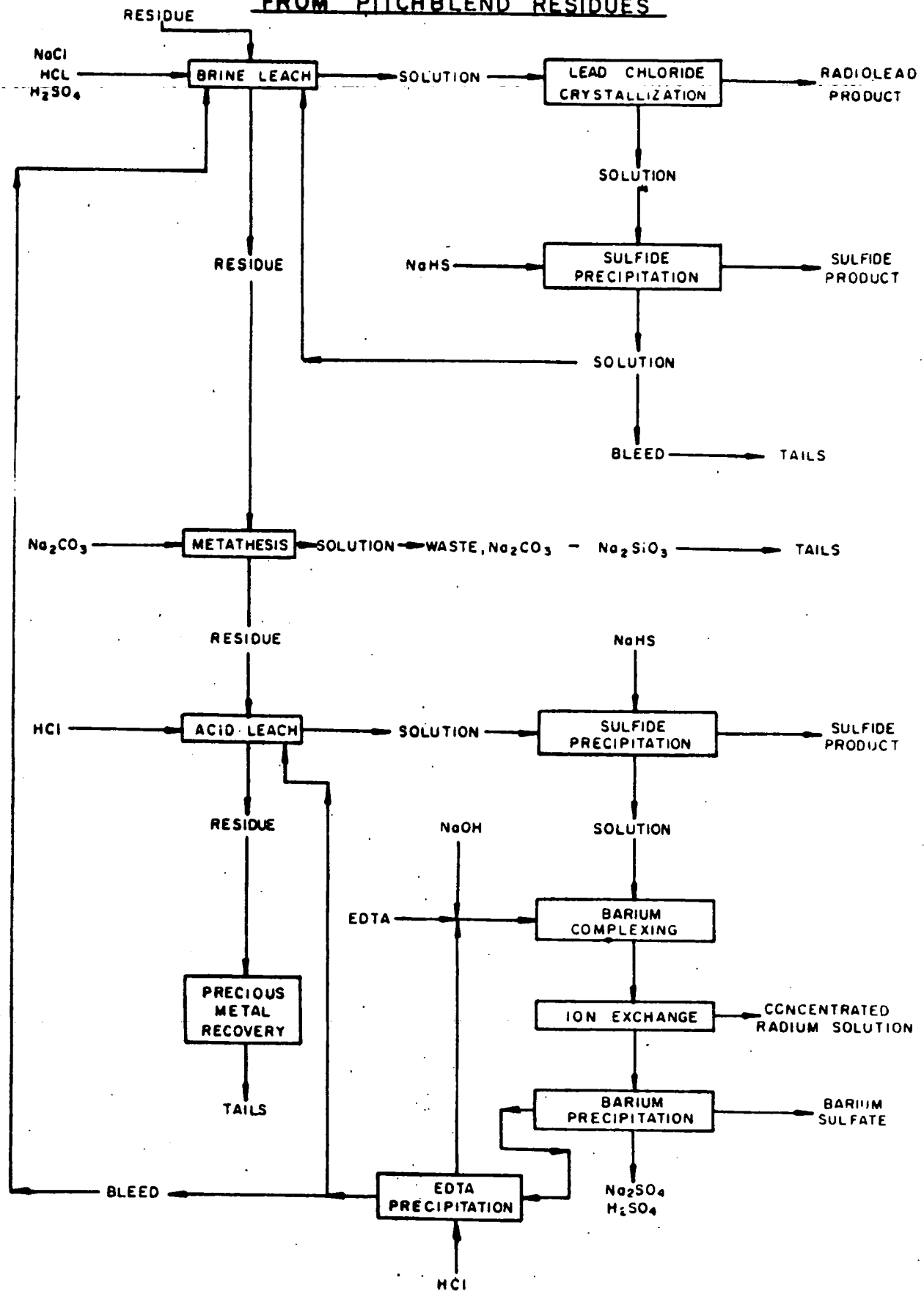

FIGURE 1

MATERIAL BALANCE FOR CHEMICAL TREATMENT

A tentative material balance has been made using information from results gathered during testing of the chemical treatment flowsheet. The material balance is shown in Figure 2. Figure 2 also depicts the major equipment items for the chemical flowsheet and the operating criteria for each major step which has been tested.

The lead would be dissolved by 4 molar brine at 2 pH and 80°C in a 3-stage countercurrent leaching circuit. About 90% of the lead will dissolve along with 73% of the uranium, 44% of the nickel, 54% of the cobalt, 50% of the copper, and less than 0.3% of the radium. Cooling the leach solution to 0°C will cause over 95% of the solubilized lead to crystallize as lead chloride. The lead chloride crystals contain less than 1% of other metals as impurities.

The solution after the lead chloride crystallization would be treated with sulfiding agent such as sodium sulfhydrate to precipitate the uranium and base metals as sulfides. The sulfide precipitate would contain about 9% U_3O_8, 10% nickel, 20% lead, 7% cobalt, and 2% copper along with traces of zinc, manganese, and iron.

The residue after the lead removal would be metathesized with sodium carbonate to convert the barium and radium sulfates to carbonates. This would be done in a 3-stage countercurrent circuit at 80°C. Some silica will be dissolved as sodium silicate during the metathesis along with most of the residual uranium.

The residue after metathesis would advance to the hydrochloric acid leach circuit where a 1.0 pH leach would dissolve 96% of the barium and radium and most of the balance of the uranium and base metals. The uranium and base metals would be removed from the solution by precipitation as sulfides.

4943

000009

MATERIAL BALANCE FOR CHEMICALLY TREATING PITCHBLEND RESIDUES TO RECOVER RADIUM

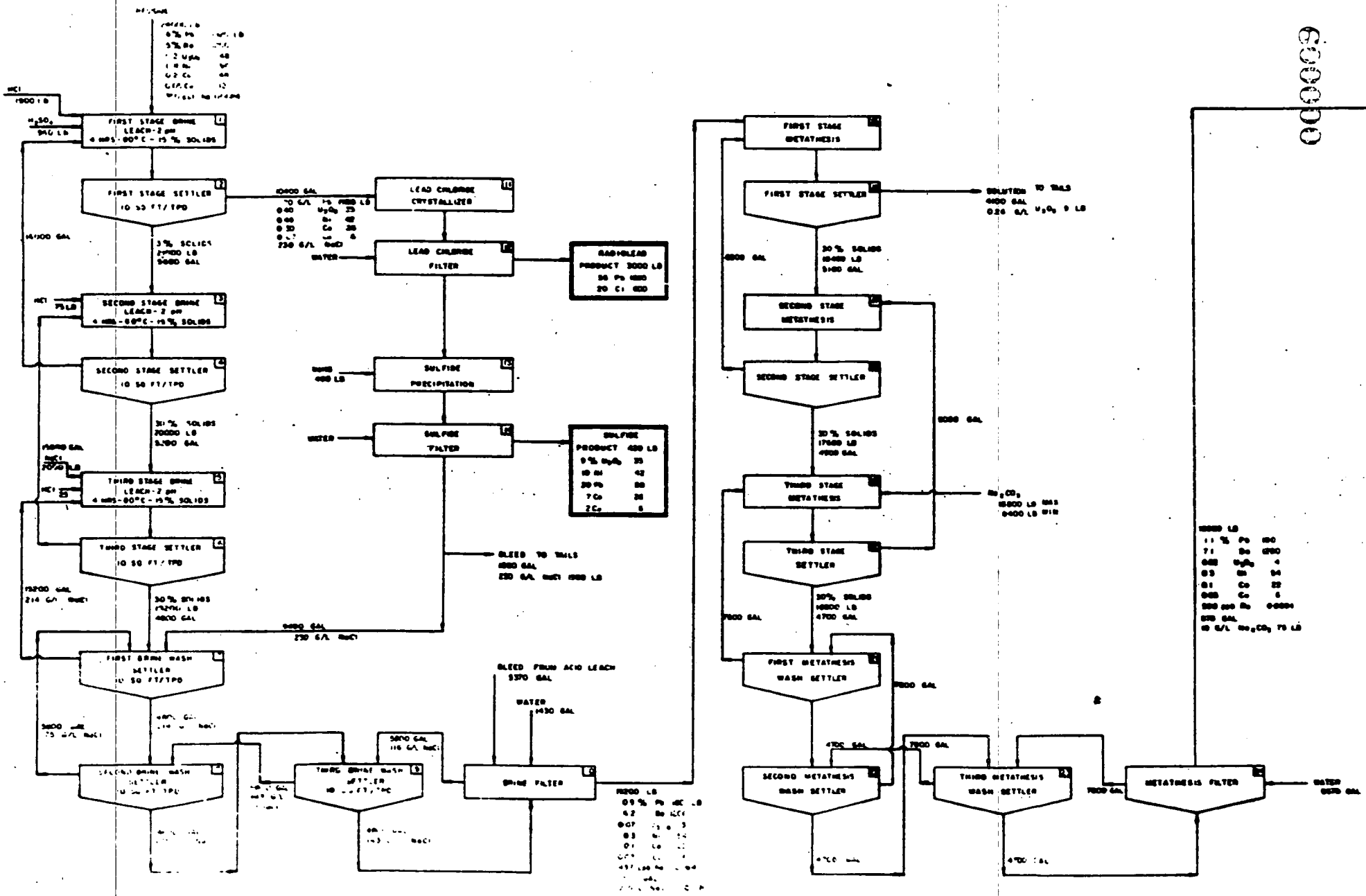

FIGURE 2

4943

000010

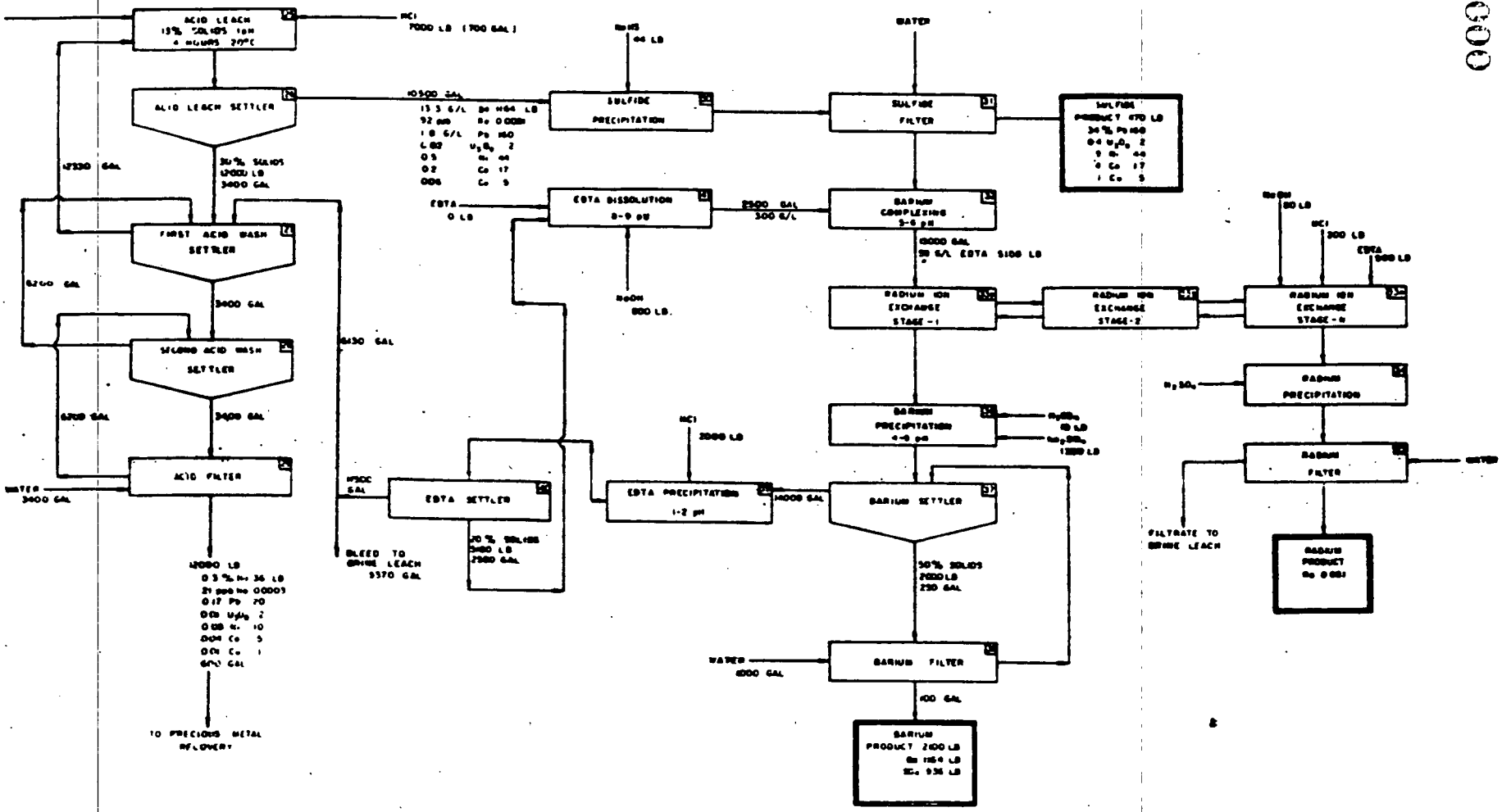

FIGURE 2 (CONT'D)

Sodium form ethylene diamine tetraacetic acid, EDTA, would be added to complex with the barium, and the pH would be adjusted to 5 to 6. The EDTA complexed solution would be the feed for a multiple stage ion exchange circuit in which the radium would be separated from the barium and concentrated in a series of steps. The number of ion exchange steps would depend on the ultimate radium concentration desired.

The barium would be precipitated from the ion exchange raffinate as the sulfate. Sodium sulfate would be used as the sulfate source, and sulfuric acid would be used to adjust to pH between 4 and 5 to destroy the barium-EDTA complex. The EDTA would be recovered from the barium free solution by acidification to 1-2 pH with hydrochloric acid. This would precipitate the hydrogen form of EDTA which would be thickened and removed for recycle. The EDTA would be recycled by adding sodium hydroxide to form the soluble sodium form. Filtrate from the EDTA recovery can be recycled as wash to both the acid leach and the brine leach.

Since the ion exchange separation was not studied during this program, the makeup quantities of EDTA, hydrochloric acid, and sodium hydroxide are only speculative. The estimated reagent requirements per ton of Fernald residue are as follows:

	lb
Sulfuric acid	80
Hydrochloric acid	933
Sodium chloride	170
Sodium sulfhydrate	38
Sodium carbonate	1,000
Sodium hydroxide	73
EDTA	40
Sodium sulfate	110

E 4943

ECONOMIC ANALYSIS OF CHEMICAL TREATMENT

A sufficient amount of laboratory work has not been performed to optimize the process conditions nor to size the necessary equipment. The laboratory work has indicated that the process can achieve the desired goal of recovering the radium in a concentrated form. Therefore, the economic analysis is based solely on the apparent optimum conditions and probable equipment sizes.

CAPITAL COST

Major equipment items are listed in Table 1. The total purchase cost for these items is $523,500. Approximately 30 pumps at an average cost of $1,500 would be needed for an additional $45,000. Steam and other utilities would require about $50,000 of capital. Instrumentation and miscellaneous equipment are estimated at 20% of the purchase cost of the major equipment, or $105,000. The total cost of all equipment would then be $723,500.

The cost for installation, including engineering and contingencies, would be 235% of the cost of all equipment, or $1,700,000. This would make the total installed cost $2,373,500.

000012

E 4943

Table 1

Major Equipment Items
Based on 24,000 pounds Residue per Day

No.	Description	Size	Price
1	First stage brine leach	2-6'Ø x 8'	$ 6,000
2	First stage settler	1-12'Ø x 8'	15,000
3	Second stage brine leach	2-6'Ø x 8'	6,000
4	Second stage settler	1-12'Ø x 8'	15,000
5	Third stage brine leach	2-6'Ø x 8'	6,000
6	Third stage settler	1-12'Ø x 8'	15,000
7	First brine wash settler	1-12'Ø x 8'	15,000
8	Second brine wash settler	1-12'Ø x 8'	15,000
9	Third brine wash settler	1-12'Ø x 8'	15,000
10	Brine filter	4'Ø x 3 disc	20,000
11	Lead chloride crystallizer		30,000
12	Lead chloride filter	36" x 20 frame	10,000
13	Sulfide precipitation	2-4'Ø x 5'	3,000
14	Sulfide filter	36" x 20 frame	10,000
15	First stage metathesis	2-6'Ø x 8'	6,000
16	First stage settler	1-16'Ø x 8'	15,000
17	Second stage metathesis	2-6'Ø x 8'	6,000
18	Second stage settler	1-16'Ø x 8'	15,000
19	Third stage metathesis	2-6'Ø x 8'	6,000
20	Third stage settler	1-16'Ø x 8'	15,000
21	First metathesis wash settler	1-16'Ø x 8'	15,000
22	Second metathesis wash settler	1-16'Ø x 8'	15,000
23	Third metathesis wash settler	1-16'Ø x 8'	15,000
24	Metathesis filter	4'Ø x 3 disc	15,000
25	Hydrochloric acid leach	2-6'Ø x 6'	5,500
26	Acid leach settler	1-12'Ø x 8'	15,000
27	First acid wash settler	1-12'Ø x 8'	15,000
28	Second acid wash settler	1-12'Ø x 8'	15,000
29	Acid filter	4'Ø x 2 disc	15,000
30	Sulfide precipitation	2-4'Ø x 5'	3,000

000013

Table 1 (cont'd)

No.	Description	Size	Price
31	Sulfide filter	1-36" x 20 frame	$ 10,000
32	Barium complexing	2-4'Ø x 5'	3,000
33	Radium ion exchange system		100,000
34	Radium precipitation	1-4'Ø x 5'	1,500
35	Radium filter	1-1 sq ft pan	1,000
36	Barium precipitation	2-4'Ø x 5'	3,000
37	Barium settler	1-6'Ø x 5'	7,500
38	Barium filter	1-36" x 20 frame	10,000
39	EDTA precipitation	2-4'Ø x 5'	7,500
40	EDTA settler	1-6'Ø x 5'	7,500
	Total		$523,500

OPERATING COST

The plant as conceived could probably operate with four operators on each shift. Shift supervision probably could be provided from the existing plant. Allowance is made for two supervisors, two mechanics, and one analyst. The daily labor and reagent costs are listed below:

Labor			
Operators	5.50/hour		$ 528.00
Supervisors	7.50/hour		120.00
Mechanics	6.00/hour		96.00
Analyst	5.50/hour		44.00
			$ 788.00
Reagents			
Sulfuric acid	960 lb	@$0.015	$ 14.40
Hydrochloric acid	11,196 lb	@$0.019	212.70
Sodium chloride	2,000 lb	@$0.01	20.00
Sodium sulfhydrate	444 lb	@$0.10	44.40
Sodium carbonate	12,000 lb	@$0.022	264.00
Sodium hydroxide	880 lb	@$0.05	44.00
EDTA (Versene)	500 lb	@$0.80	400.00
Sodium sulfate	1,300 lb	@$0.013	16.90
			$1,016.40
Utilities			
Steam			$ 25.00
Power			75.00
			$ 100.00
Maintenance and Operating Supplies			$ 400.00
Total Daily Operating Cost			$2,304.40

BY-PRODUCT INCOME

Three by-products would be a potential source of income for the proposed plant. The by-products are: sulfide precipitate, radio-lead chloride, and the precious metals remaining in the residue. Values can be given to the sulfide precipitate as it could be treated in the present Canon City circuit and to the precious metals which can be recovered by cyanidation. Estimated by-product income is listed below:

Product	Amount	Value Per Unit	Total Value
Sulfide Precipitate			
Uranium	37 lb	$5	$185
Cobalt	48 lb	$2	96
Nickel	86 lb	$1	86
Copper	12 lb	$0.5	6
Precious Metals			
Gold	18 oz	$100	$1,800
Palladium	4 oz	$40	160
Platinum	0.2 oz	$150	30
Cost of recovery, $180/day			-180
Net by-product value			$2,183

4943

ECONOMIC BALANCE

The following table is the estimated economic balance for the operation of the proposed circuit:

Amortization (based of 10,000 tons feed)	$2,855
Labor	788
Reagents	1,016
Utilities	100
Maintenance and Operating Supplies	400
By-product income	
Sulfide precipitate	-373
Precious metals	-1,810
Net Daily Cost	$2,976

The primary products from the operation would be 3000 pounds of radiolead chloride and 3.6 grams of radium daily. To make the process economically viable, the revenue from the radiolead and the radium plus any subsidy must be well in excess of $3,000 per day.

000017

4943

RECOVERY OF VALUES

MERCURY AMALGAMATION

Most of the gold in the pitchblende residues occurs as the metal. Amalgamation of the gold, platinum, and palladium with mercury was evaluated. The Lewiston residues contained very little precious metals, and the residue analyses after amalgamation were within the expected analytical precision of the head analyses. Therefore, it was assumed that none of the precious metals were extracted into the mercury.

Three amalgamation tests were made with the Fernald residues. The results of these tests are listed below:

Amalgamation of Precious Metals from Fernald, Pitchblende Residues

	Percent Extracted by the Mercury			
	Gold	Platinum	Palladium	Silver
Silo 1	47	20	11	-
Silo 2	80	0	50	-
Silo 2	68	0	0	5

Details of the above tests were included in letter reports to Mr. Miles Fixman dated June 15, 1974 and August 15, 1974.

000018

ACID LEACHING

The ability of hydrochloric, nitric, and sulfuric acids to dissolve the base metal and uranium content of the residues was evaluated with a number of leach tests. Details of the tests are included in the letter reports mentioned above. The results of the leaches are summarized below:

Feed Residue	Acid Used	Temp °C	pH	Time hrs	Percent Dissolved Au	Pt	Pd	Ag	U_3O_8	Cu	Co	Ni
Bldg 411	Sulfuric	85	0	6	20	30	0		14	0	27	0
	Nitric	85	0	6	60	50	0		79	55	69	5
	Hydrochloric	85	0	6	40	60	0		89	72	88	53
Silo 1	Sulfuric	80	0.3	8	<30	<22	<17		85	84	85	65
Silo 2	Sulfuric	85	0	6	0	0	30		77	76	77	79
	Sulfuric	80	2	22	<2	2	<2	4	73	65	75	67
	Sulfuric	80	1.3	22	<1	2	<1	3	76	73	77	69
	Sulfuric	80	1.1	22	<1	<2	<2	6	80	76	78	73
	Sulfuric	80	1.0	22	<1	<2	<15	3	81	81	85	79
	Sulfuric	80	0.7	8	<16	<9	<2	<2	83	77	78	73
	Sulfuric	80	0.5	18	5	6	14	8	73	76	77	71
	Nitric	85	0	6	0	20	40		85	63	70	78
	Hydrochloric	85	0	6	0	40	60		73	83	74	86

The precious metal results are not too precise as they were determined using geochemical techniques and the leaches were not material balanced.

CYANIDE LEACHING

Cyanide leaching was evaluated on both the as-received residue and the residue after sulfuric acid leaching. From 50 to 80% of the gold, platinum, and palladium were dissolved by a cyanide leach of the as-received Building 411 residue. The results from cyanide leaching of the Silo 2 residues are listed below:

Residue	Cyanide Addition lb/Ton	Percent Dissolved Au	Pt	Pd	Ag
As-received	100	93	0	75	-
Acid leached	80	79	66	33	53
	40	36	51	33	52
	20	29	58	17	63

Details of the above leaches are included in the previously mentioned letter reports. The extremely large cyanide addition required to dissolve the gold is probably due to the fine particle size of the residues.

CONCENTRATION OF RADIUM

SIZING OF RESIDUES

The pitchblende residues consist of unreacted ore particles and barium sulfate precipitates. Almost 60% of the Building 411 sample and over 73% of the Silo materials are finer than 400-mesh. Screen analyses and distributions of the uranium, radium, and nickel are listed in Tables 2 and 3. It will be noted that the radium in the Silo material concentrates into the minus 10-micron fraction with 80.7% of the radium being contained in 48% of the feed weight. However, none of the coarse fractions had low radium analyses, the lowest being 24 ppb radium.

Table 2

Screen Analyses

Size Range Mesh	Building 411 % Retained	Building 411 Cumulative % Retained	Silo 2 % Retained	Silo 2 Cumulative % Retained
+20	17.1	17.1	4.1	4.1
-20 +65	7.0	24.1	9.5	13.6
-65 +100	1.9	26.0	1.8	15.4
-100 +200	5.4	31.4	5.2	20.6
-200 +325	3.8	35.2	4.0	24.6
-325 +400	5.0	40.2	2.3	26.9
-400	59.7	99.9	73.1	100.0

E 4943

Table 3

Distribution of Uranium, Radium, and Nickel in Various Size Fractions

Fraction	% of Weight	% U_3O_8	% Distribution	Ppb* Radium	% Distribution	% Nickel	% Distributi
Building 411							
+400 mesh	40.2	0.159	66	≈1.5	25	0.26	22
-400 mesh	59.8	0.055	34	≈3	75	0.61	78
Silo 2							
+65 mesh	13.6	0.273	11	≈105	4.6	0.14	5
-65+400 mesh	13.3	0.130	5	≈ 24	1.0	0.15	5
-400 mesh	73.1	0.390	84	≈400	94.4	0.47	90
400 x 30 μ	14.6			≈150	7.1		
30 x 20 μ	5.1			≈180	3.1		
20 x 10μ	5.1			≈210	3.5		
minus 10μ	48.3			≈520	80.7		

* Parts per billion

FLOTATION

Flotation was evaluated as a means of concentrating either the silica or the barium-lead-radium sulfate precipitate. Attempts to concentrate the silica by flotation were not at all successful as all fractions collected had the same radium content.

About 15 tests were performed to attempt concentration of the sulfate precipitate. These included both sulfidation of the lead with flotation using xanthate and barite type flotation using oleic acid.

BEST COPY AVAILABLE

In both cases, flotation of the bulk silo material gave flotation concentratres containing two-thirds of the radium in about one-third of the feed weight. The flotation tails contained about 150 ppb radium. Desliming a sample of the flotation tails produced a sand fraction containing only 40 ppb radium.

Flotation of only the minus 400-mesh fraction gave slightly better results. Table 4 lists the weights and radium contents of the various fractions recovered. By the combination of screening, flotation with oleic acid, and desliming of the tails, about 93% of the radium could be recovered in 66% of the weight. The sand tails and plus 400-mesh fraction from the sample used would still contain about 60 ppb radium.

Table 4

Oleic Acid Flotation Results

Fraction	Weight %	Radium Parts per Billion	Radium Distribution %
Plus 400-mesh	26.9	65	5.6
Concentrate	44.1	360	70.4
Tailings slimes	22.0	250	23.0
Tailings sands	7.0	40	1.0

RADIUM RECOVERY BY CHEMICAL TREATMENT

Generally, radium has been recovered commercially from barium-radium sulfate precipitates produced as a by-product of nitric acid leaching of pitchblende ores. These precipitates usually have been fairly pure with a small amount of lead being the only major contaminant. The conventional recovery process is described in the Kirk-Othmer Encyclopedia of Chemical Technology. A reprint of Kirk-Othmer's description is included in the Appendix. In this flowsheet, the lead is solubilized as lead chloride, the sulfates are converted to carbonates by metathesis with sodium carbonate, and the barium and radium are dissolved with hydrochloric acid.

A second process was evaluated by the Mound Laboratory for the treatment of the Fernald pitchblende residues. This process was described in the United States Atomic Energy Commission Report MLM-609 written in 1951 by H. L. Rawlings. A poorly legible microcard copy of this report was examined and the process is as follows: The lead is solubilized as sodium plumbate by a high temperature (80°C) leach with sodium hydroxide. The residue from the lead leach is metathesized with a mixture of sodium carbonate and sodium hydroxide at 120°C in a pressure vessel. The resulting barium and radium carbonates are dissolved in hydrochloric acid and precipitated as the chromates. The barium is then separated from the radium by fractional precipitation of the chromates.

The flowsheet has a number of obvious drawbacks. First, both the lead leach and metathesis will dissolve large amounts of silica. This silica would not permit simple recovery of a relatively pure lead product. Second, the quantity of material to be processed does not justify the expense associated with pressure equipment. Third, the fractional precipitation requires a number of steps which would be difficult to either automate or operate by remote control. The Kirk-Othmer flowsheet does not have the first two limitations and therefore would appear to offer the best chances for a viable circuit.

BRINE LEACHING

Solubilization of the lead contained in the Silo 1 residues by sodium chloride brine was evaluated in a number of tests. The data gathered during these tests are listed in Table 5. It would appear from the test results that about 90% of the lead could be solubilized by three stages of countercurrent leaching at 80°C and 2 pH using a fairly low percent solids in the leach.

For some reason the brine at 80°C will dissolve only about 20 g/l of lead; whereas the handbook data indicate that the brine should be able to dissolve up to 80 g/l of lead. Additional testing could optimize the leaching conditions and determine the technique necessary to hold more of the lead in solution.

A 2-stage countercurrent brine leach at 3 pH dissolved 73% of the uranium, 44% of the nickel, 54% of the cobalt, and 50% of the copper contained in the residue feed.

Lead chloride was recovered from the brine leach solution by cooling to less than 5°C. The lead chloride had the following semi-quantitative, X-ray fluorescence analysis:

Lead	54%
Iron	0.52%
Chromium	0.023%
Copper	0.018%
Nickel	0.017%
Manganese	0.002%

Table 5

Brine Leaching Studies

Test Number	83	84	95	96	97	98	99	100	101	102	103	106	107
Number of stages	1	1	3	3	3	1	1	1	1	1	1	2	2
Time/stage, hrs	6	6	3	3	3	2	4	8	2	4	8	4	4
Temperature, ^{o}C	80	80	80	80	80	80	80	80	80	80	80	80	80
% solids	33	33	33	33	33	15	15	15	15	15	15	33	33
Brine concentrate,													
g NaCl/l	250	250	300	300	300	300	300	300	300	300	300	300	300
g NaCl/100 g feed	50	50	180	180	180	150	150	150	150	150	150	Recycled	Recycled
Final pH	3	1	3	6	7.3	5	5	5	3	3	3	3	2
g HCl/100 g feed	18.5	24	22	13	0	18	18	19	20	21	21	22	23
Residue													
Weight, % of feed	107	92	81	91	96	84	88	83	91	81	80	80/106	79/113
% lead, feed	8.2	8.2	8.2	8.2	8.2	8.2	8.2	8.2	8.2	8.2	8.2	5.2	5.2
% lead, residue	4.8	5.8	1.27	7.4	8.9	3.3	3.0	1.74	1.80	1.40	1.39	1.5/6.6	1.12/5.85
% of lead, dissolved	37	35	87	18	0	66	68	82	80	86	86	77	83

000026

4943

The lead chloride product could be further treated for the recovery of polonium. Less than 0.3% of the radium appeared to report to the lead chloride product. This value may be high since it was determined by the growth of radium daughters, some of which would already be present in the lead chloride.

SULFIDE PRECIPITATION

The brine solution, after the lead chloride crystallization, would contain about 1 g/l lead, 0.4 g/l U_3O_8, 0.5 g/l nickel, 0.3 g/l cobalt, and 0.1 g/l copper. All of these can be removed from the solution by sulfide precipitation. A sample of brine solution was treated with an excess of sodium sulfhydrate (7.5 grams per liter) to precipitate the above elements as sulfides. The precipitation results are shown in Table 6.

The precipitated sulfides probably could be treated in the present Canon City plant for the recovery of these values.

METATHESIS

The metathesis studies were all made by performing 2- or 3-stage digestions of the brine leach residue with sodium carbonate solutions. The temperature of the digestion was 80°C. After the digestion period, the solids were diluted with water and allowed to settle. The supernatant was decanted and the settled pulp was digested with a second or third addition of sodium carbonate. Results of the metathesis tests are listed in Table 7.

Table 6

Precipitation of Brine Solution Values with Sodium Sulfhydrate

	Solution Analyses Chemical, g/l		Precipitate Analyses X-ray Fluorescence, %
	Feed	Filtrate	
Uranium, U_3O_8	0.517	0.0002	4
Nickel	0.621	0.012	5.5
Cobalt	0.385	0.009	2
Copper	0.095	0.0007	0.9
Zinc	0.017	0.0004	0.2
Iron	0.007	0.003	0.3
Lead	---	---	22
Manganese	---	---	0.1
Chromium	---	---	0.02
Lanthanum	---	---	0.49
Cerium	---	---	0.29

E 4948

Table 7

Metathesis Studies

Test Number	85	86	89	90	108
Number of stages	2	2	3	3	3
Temperature, °C	80	80	80	80	80
% solids	35	35	20	33	20
Sodium carbonate addition g/100 brine residue	130	130	360	180	480
Sodium carbonate consumption g/100 g brine residue					35
Residue weight % of brine residue	75	88	75	75	73
Residue solubility % of barium soluble in hydrochloric acid	86	85	nd	nd	96

Note: nd = not determined. The weight loss in hydrochloric acid indicated lower barium solubility than with the other tests.

It would appear from these results that the lower pulp densities were more efficient at converting the sulfates to carbonates. Most of the uranium contained in the brine residue was dissolved during the metathesis. It is doubtful that this small amount would justify recovery considering the high pH of the solution.

000029

4943

HYDROCHLORIC ACID LEACHING

The residue after the metathesis contains the radium, barium, and residual lead as their corresponding carbonates. These carbonates are readily soluble in hydrochloric acid. A number of metathesis residues were evaluated by hydrochloric acid leaching. The results of these tests are tabulated in Table 8. One residue was leached at fairly mild conditions and indicated that the barium solubility was dependent on the efficiency of the metathesis, not the hydrochloric acid leaching conditions.

The hydrochloric acid leach not only dissolves the barium and radium, but also dissolved most of the remaining uranium and base metals. The uranium and base metals can be precipitated from this leach solution in the same manner as was done with the brine leach solution. The addition of 0.5 gram of sodium sulfhydrate per liter of 2 pH solution formed 0.4 gram of precipitate containing essentially all of the solubilized uranium and base metals. This precipitate could be treated for recovery of the values along with the precipitate from the brine leach circuit.

The residue from the hydrochloric acid leach contains nearly all of the precious metals. It should be possible to recover these values by conventional cyanidation and precipitation with zinc dust.

4943

Table 8

Hydrochloric Acid Leaching
Metathesized Residue

Test Number	87	88	91	92	109	112	113	114
Leach Conditions								
Temperature, °C	80	80	80	80	80	25	80	80
% solids	8	8	8	8	10	10	10	10
Target pH	--	--	--	--	--	1.0	1.0	3.0
Hydrochloric acid addition g HCl/100 g feed	238	238	357	357	350	49	51	29
Final pH	<0	<0	<0	<0	<0	0.6	1.0	2.0
Residue								
Weight, % of feed	76	78	88	88	70.5	79.3	74.5	75.0
% barium, feed	5.44	5.69	--	--	5.5	5.74	5.74	5.74
% barium, residue	1.04	1.07	--	--	7.8	0.28	0.80	0.35
% of barium, dissolved	85	85	--	--	0	96.1	90	95.5
% lead, feed	5.1	5.4	--	--	--	--	--	--
% lead, residue	0.12	0.42	--	--	--	--	--	--
% of lead, dissolved	98	94	--	--	--	--	--	--
ppm radium, feed	493	687	--	--	--	--	--	--
ppm radium, residue	136	105	--	--	--	--	--	--
% of radium, dissolved	79	88	--	--	--	--	--	--

000031

4943

BARIUM-RADIUM ION EXCHANGE AND RECOVERY

A number of methods for separating barium and radium can be considered at this point in the circuit. The Kirk-Othmer flowsheet uses fractional crystallization of the bromides. The reported separation factor for this procedure is about 5 per recrystallization step. Fractional precipitation of the chromates has also been proposed and would have a separation factor of about 3.4. Papers describing the above techniques are included in the Appendix.

A third alternate would be to use ion exchange. A number of systems have been reported in the literature. Abstracts and papers describing various ion exchange systems are included in the Appendix. The principle for separation of the radium and barium is that barium will complex with a variety of organic acids at a lower pH than the radium. The complexed solution can be passed through a cation exchanger and the radium will be loaded preferentially to the complexed barium. Examination of the papers indicates that the best system for separation would utilize ethylene diamine tetraacetic acid, EDTA, to complex the barium. This system was patented in 1959 by M. E. Fuentevilla. The patent, number 2,892,679, was assigned to the United States Atomic Energy Commission.

The separation process complexes the barium with EDTA at 5 to 6 pH. The solution is passed through as sulfonic acid type cation exchange resin, Dowex 50, to load all of the radium and a fraction of the barium. The resin is eluted with an 8 pH EDTA solution. The eluate is acidified to 5 to 6 pH and the radium is reextracted. The

000082

process is repeated until the desired radium to barium ratio is achieved. The separation factor attained per stage is not reported in the patent, but it should be as good or better than the fractional precipitation or crystallization techniques.

Since rapid solution analysis for radium was not possible with the counting equipment available at Hazen, no studies on the ion exchange were made. However; tests were made to determine the conditions nécessary for the removal of the barium from the solution and the recovery and recycle of the EDTA.

Barium sulfate can be precipitated from the EDTA complexed solution by the addition of sodium sulfate at 5.0 pH. The EDTA after the barium precipitation would be in the sodium form. Acidification to 1 to 2 pH would precipitate the EDTA as the acid. The acid precipitate could be recycled by dissolving it at an alkaline pH using sodium hydroxide.