U-005-202.77

5111

REMOVAL SITE EVALUATION PLANT 8 DUST COLLECTORS G43-27/29 REMOVAL AND REPLACEMENT

11/01/90

DOE-FSO/WEMCO
59
RSE
OU3

- 5111

REMOVAL SITE EVALUATION

PLANT 8 DUST COLLECTORS G43-27/29
REMOVAL AND REPALACEMENT

FEED MATERIALS PRODUCTION CENTER
U. S. DEPARTMENT OF ENERGY

October 1990

001

Removal Site Evaluation

Plant 8 Dust Collectors G43-27/29 Removal and Replacement

INTRODUCTION

The Dust Collector Replacement Project is located in Plant 8, which is a two story I-beam supported building with a corrugated transite outer cover. The ground floor is approximately 25,000 square feet in area and is made of reinforced concrete. There are windows and doors on all four sides of the building. Plant 8 was the recovery plant, involving the upgrading of uranium recycle materials into feed materials for processing in the Plant 2/3 refinery. Upgrading involved the following: (1) the furnace drying or oxidizing of various materials in order to remove moisture, oils, graphite, and metallic impurities; (2) crushing, milling, and screening recycle materials; (3) processing low-level radioactive waste materials; and (4) drum washing operations. These activities were terminated in July 1989.

This Removal Site Evaluation (RSE) specifically deals with the removal and replacement of the G43-27 and G43-29 dust collectors, which involves the removal of approximately 10,000 cubic feet of material contaminated with above background levels of uranium. These materials include the following: construction rubble, metal, process equipment, asbestos, and wood. Monometers on the dust collectors, which contain mercury, and machine lubricants will be removed by the WMCO Instrumentation shop and dispositioned according to site procedures. The G43-27 and G43-29 dust collectors will be replaced with new systems.

This RSE has been completed by the DOE under authorities delegated by Executive Order 12580 under Section 104 of CERCLA and is consistent with Section 300.410 of the National Oil and Hazardous Substance Pollution Contingency Plan (NCP). This RSE has been completed to support the decision as to whether the present conditions warrant a removal action and addresses the Plant 8 Dust Collector replacement project which involves the removal of contaminated material.

SOURCE TERM

Residues of uranium, uranium compounds, and trace amounts of thorium are known to be present in the interior and exterior of the ductwork, piping, and dust collectors. Field investigations included: (1) internal composite sampling for uranium, thorium, and RCRA metals; and (2) external composite surface 'radiological survey' using an Alpha Probe, a Geiger/Mueller Probe (GM), and 100 cm cm smears. Attachment 1 contains the results for the

radiological and RCRA composite sampling with sample number RC-0395 corresponding to the G43-27 dust collector and RC-0396 corresponding to the G43-29 dust collector (Attachments 2 and 3). The results show 68641.2 pCi/g for U-238 at 99.48% wt. of total uranium for sample RC-0395, and 80773.2 pCi/g for U-238 at 99.72% wt of total uranium for sample RC-0396 (Attachment 1). Also, Th-228 was at 75 and 9.9 pCi/g for RC-0395 and RC-0396 respectively. These results are above the DOE category 2 limits of 10 pCi/g for U-238, and category 1 limits of 10 pCi/g for Th-228 (FMPC-720).

Attachment 4 contains the 'radiological survey' results and figures for the sample locations. The concentrations of removable alpha particles on a 100 cm cm smear ranged from less than 10 to more than 15,000 disintegrations per minute (dpm). The alpha particle measurements, done with an Alpha Probe, ranged from 400 to 120,000 dpm. The concentrations of removable beta-gamma particles on a 100 cm cm smear ranged from 16 to 27,774 dpm. The beta-gamma particle measurements, done with the GM Probe, ranged from 3,000 to 800,000 dpm. Most of the locations sampled were contaminated above FMPC-720 category 2 levels for metal (20 dpm for alpha and 100 dpm for beta-gamma).

The above contamination levels are taken from the equipment prior to demolition and high level cleaning of the equipment. After demolition and cleaning, the equipment will be surveyed and disposed of pursuant to FMPC-720.

EVALUATION OF THE MAGNITUDE OF THE POTENTIAL THREAT

The potential threat is the possible release of radioactive particles to the environment through the suspension of particulate matter during demolition and cleaning activities. In order to significantly reduce the potential threat of releases during the demolition and cleaning activities, the following control measures will be utilized as stated in the Subcontract No. S/C 428, Section 7, part 6: (1) the construction (demolition) area will be isolated with a dust proof barricade constructed of approved non-combustible material; (2) the construction area will be completely roped off from other plant areas; and (3) construction and cleaning waste shall be packaged, handled and dispositioned in accordance with the FMPC Site Policy and Procedure, FMPC-720.

ASSESSMENT OF THE NEED FOR REMOVAL ACTION

Consistent with Section 40 CFR 300.410 of the NCP, the Department of Energy shall determine the appropriateness of a removal action. Eight factors to be considered in this determination are listed in 40 CFR 300.415 (b)(2). The following applies specifically to the concentrations of uranium and thorium in the removable material from the Plant 8 Dust Collectors G43-27/29 Removal and Replacement Project:

40 CFR 300.415 (b)(2)(i)

Actual or potential exposure to hazardous substances or pollutants or contaminants or nearby populations, animals, or food chain.

APPROPRIATENESS OF A RESPONSE

If a planning period of less than six months exists prior to initiation of a response action, DOE will issue an Action Memorandum will describe the selected response and provide supporting documentation for the decision.

If it is determined that there is a planning period greater than six months before a response is initiated, DOE will issue an Engineering Evaluation/Cost Analysis (EE/CA) Approval Memorandum. This memorandum is to be used to document the threat of public health and the environment and to evaluate viable alternative response actions. It will also serve as a decision document to be included in the Administrative Record.

The work associated with this RSE will be conducted with the appropriate controls, and existing site policy and procedures adequately manage the control of the generated waste for this project. A removal action is not required to address the Plant 8 Dust Collectors G43-27/29 Removal and Replacement Project.

ATTACHMENT 1

DUST COLLECTOR G43-27/29

RADIOLOGICAL RESULTS

SAMPLE NO.	TOTAL U ppm	TOTAL Th ppm	U pCi/g	Th pCi/g	Th-228 pCi/g	WT % (U) U-234	U-235	U-236	U-238
RC-0395	116,900	442*	69000	120	75	0.003	0.50	0.011	99.48
RC-0396	16.2%**	103*	81000	21	9.9	0.001	0.27	0.009	99.72

* units a ug/g
** see notation from lab results for explanation

RCRA RESULTS

SAMPLE NO.	EP TOX (mg/l) Ag	As	Ba	Cd	Hg	Se	Cr	Pb	TOTAL Pb (ug/g)
RC-0395	<1.0	<1.0	<25	<0.2	<0.1	<0.1	<1.0	<1.0	294
RC-0396	<1.0	<1.0	<25	<0.2	<0.1	<0.1	<1.0	<1.0	11.1

5111

Attachment 2

CUSTODY TRANSFER RECORD/LAB WORK REQUEST

RECEIVED BY	CLIENT J.M.C.O.	ALOA CONTACT
DATE	CLIENT CONTACT J. Poff	DATE DUE
ASSIGNED TO	PHONE 8-425	PROJECT NUMBER

SAMPLE IDENTIFICATION						ANALYSES REQUESTED				
LOT NO./ DRUM NO.	SAMPLE NO.	DESCRIPTION	MATRIX	DATE COLLECTED	CONTAINER/ PRESERVATIVE					
	R.C.-0395	G43-27 D.C.	X	12-15-89	glass / —					
	R.C.-0396	G43-29 D.C.	X	12-15-89	glass / —					
		demolition of the pet & dust collector								

ATTACHMENT 2

MATRIX: S - SOIL, W - WATER, O - OIL, DS - DRUM SOLIDS, DL - DRUM LIQUIDS, X - OTHER (Specify)

SPECIAL INSTRUCTIONS:

ITEM/REASON	RELINQUISHED BY	RECEIVED BY	DATE	TIME	ITEM/REASON	RELINQUISHED BY	RECEIVED BY	DATE	TIME
X/analysis	L. Love Jr.	Jesse Wile	1-3-90	10.40					

5111

Attachment 3

REQUEST FOR ANALYSES - ANALYTICAL LABORATORIES

Project No.: SOIL
(8) SubProject No.: _____
(12) Cust. Dept. Number: 0004
(9) Customer Name: Env. Compliance
(15) Date/Time Rcvd. 1-3-90 @ 1040 (In Lab.)

(4) Chain of Custody: (Y)
(5) Priority: 1 (1,2,3)
(6) Deadline Date: _____ (for results)
(10) Charge (Account #): APP-037
(16) Sample Matrix: X
(18) Sampled By: Chem. Operators
(23) Est. Disposal Date: _____

(11) Cust. Sample No. or East Coordinate	(13) Sampled From: Location or South Coordinate or Depth	(17) Date/Time Sampled (By Sampler)	(19) Material Description or Project Name	(14) Customer Request Number	COMMENTS (Sample Receiving Lab - Add to Comments:) 1. Send copy of results to T. Poff. 2. Send excess sample to S.R. Lab.	(1) Computer Lab. No. Assigned (For SRL Use Onl
RC-0395	G43-27		Demolition of	RC-0395		
			Plant 8 Dust			
RC-0396	G43-29		Collectors	RC-0396		

ATTACHMENT 3

(X) Analyses Requested: (Also Circle Correct Isotopes And Units Where Applicable)

✓ Total U & Total Th, XRF method (ppm)
✓ U-234, U-235, U-236, U-238 (Wt%, U Basis)(pCi/g)
✓ U pCi/g (Calculated)
✓ Th-228 (d/m-g) (pCi/g)
✓ Th pCi/g (Calculated)

Ra-226 (d/m-g) (pCi/g)
Ra-228 (d/m-g) (pCi/g)
Pu-238,239, Tot. (d/m-g) (pCi/g)
✓ Total Pb (ppm)

ATTACHMENT 4

FMPC
OPERATIONS SAFETY & HEALTH - RADIOLOGICAL SAFETY

RADIOLOGICAL SURVEY REPORT

5111

te: 4-22-90	LOCATION: Plant 8	RST: DG & BAH	Page 1 of 4
ne: 1000.	LEVEL: (Bldg. 8A) 600-630-642		

SON FOR SURVEY: ☐ ROUTINE ☐ SPECIAL REQUEST ☐ RWP ☐ INCIDENT

MENTS:
G43-29 Dust Collector System - Pre-Demolition / Construction Survey - Penthouse Level 642 & Half levels 630 & 600 Drumming Station

INSTRUMENTS				
MODEL	SERIAL NUMBER	CALIBRATION DATE	BKRD.	EFF.
14C-4	44505	JAN. 90	200	10
Pieper Alpha	A315P	3-3-90	0	10
Lb 5100	4	11/89	.54	.279
			2.74	.438

ANALYZE FOR: ☒ ALPHA ☒ BETA-GAMMA ☐ OTHER

TYPE OF SURVEY: ☒ CONTAMINATION ☒ RADIATION ☐ OTHER

OLLOW-UP SURVEY ATTACHED ☐YES ☒NO
URVEY MAP ATTACHED ☒YES ☐NO

ITEM NUMBER	GRID COORDINATES	DESCRIPTION	CORRECTED DOSE RATE (mRem/hr) γ CONTACT	β/γ CONTACT	γ 3 FT.	β/γ 3 FT.	DPM ALPHA 100 CM²	DPM ALPHA PROBE	DPM BETA-GAMMA 100 CM²	DPM BETA-GAMMA PROBE
1	Penthouse Level 642	Front of D.C. South Side					123	4,000	212	10,000
2	Penthouse Level 642	Front of D.C. South Side					140	1,500	190	15,000
3	Penthouse Level 642	Front of D.C. South Side					407	2,000	801	<MDA
4	Penthouse Level 642	Front of D.C. South Side					566	6,000	1692	<MDA
5	Penthouse Level 642	Front of D.C. South Side					407	12,000	829	6,000
6	Penthouse Level 642	Front of D.C. South Side					784	15,000	1637	2,000
7	Penthouse Level 642	Front of D.C. South Side					282	20,000	304	80,000
8	Penthouse Level 642	Front of D.C. South Side					232	25,000	240	100,000
9	Penthouse Level 642	Front of D.C. South Side					1060	30,000	2267	60,000
10	Penthouse Level 642	Front of D.C. South Side					913	20,000	1751	100,000
11	Penthouse Level 642	Motor South Side					457	5,000	1085	2,000
12	Penthouse Level 642	Front of D.C. South Side					181	2,500	359	12,000
13	Penthouse Level 642	Front of D.C. South Side					156	2,000	308	10,000
14	Penthouse Level 642	Front of D.C. South Side					859	16,000	1856	32,000
15	Penthouse Level 642	Front of D.C. South Side					516	8,000	966	60,000
16	Penthouse Level 642	Top of D.C.					650	10,000	1167	50,000

NO.	DISTRIBUTION OF COPIES
1	Radiological Safety Technician Supervisor
2	Radiological Safety Engineer
3	Facility Supervisor

NOTIFICATION OF SURVEY RESULTS

SUPERVISOR NOTIFIED	TIME	DATE	NOTIFIED BY	REVIEWED BY	DATE
				WJ	4/24/90

FMPC-OS&H-1993-1 (REV. 11/4/88)

FMPC
OPERATIONS SAFETY & HEALTH - RADIOLOGICAL SAFETY

RADIOLOGICAL SURVEY REPORT (CONTINUATION SHEET)

5111

:R	GRID COORDINATES	DESCRIPTION	CORRECTED DOSE RATE (mRem/hr) γ CONTACT	β/γ CONTACT	γ 3 FT.	β/γ 3 FT.	DPM ALPHA 100 CM²	DPM ALPHA PROBE	DPM BETA-GAMMA 100 CM²	DPM BETA-GAMMA PROBE
	Penthouse Level 642	Top of D.C.					340	8,000	747	50,000
	Penthouse Level 642	Pipe					424	8,000	701	18,000
	Penthouse Level 642	Pipe					114	2,000	190	<MDA
	Penthouse Level 642	Pipe					98	1,000	240	<MDA
	Penthouse Level 642	Top of Core Cylinder					734	6,000	2623	18,000
	Penthouse Level 642	Pipe from Motor					64	1,000	103	7,000
	Penthouse Level 642	Motor					307	2,000	970	80,000
	Penthouse Level 642	Back of D.C. North Side					173	5,000	272	10,000
	Penthouse Level 642	Back of D.C. North Side					374	15,000	657	6,000
	Penthouse Level 642	Back of D.C. North Side					491	20,000	879	12,000
	Penthouse Level 642	Back of D.C. North Side					667	15,000	1313	16,000
	Penthouse Level 642	Back of D.C. North Side					633	4,000	825	8,000
	Penthouse Level 642	Back of D.C. North Side					416	3,000	728	22,000
	Penthouse Level 642	Back of D.C. North Side					575	3,000	733	16,000
	Penthouse Level 642	Back of D.C. North Side					391	4,000	601	12,000
	Penthouse Level 642	Back of D.C. North Side					382	3,000	482	130,000
	Penthouse Level 642	Back of D.C. North Side					424	2,000	623	140,000
	Penthouse Level 642	Side of D.C. West Side					35	6,000	541	10,000
	Penthouse Level 642	Side of D.C. West Side					960	5,000	1674	10,000
	Penthouse Level 642	Side of D.C. West Side					416	6,000	728	20,000
	Penthouse Level 642	Side of D.C. East Side					114	2,500	94	20,000
	Penthouse Level 642	Side of D.C. East Side					491	2,000	701	14,000
	Penthouse Level 642	Side of D.C. East Side					575	2,000	815	10,000
	Penthouse Level 642	Core Cylinder					39	<MDA	75	<MDA
	Penthouse Level 642	Core Cylinder					717	18,000	1535	40,000
	Penthouse Level 642	Core Cylinder					566	5,000	829	100,000
	Roof Level 630	Pipe coming out of Roof					22	500	30	<MDA

010

FMPC
OPERATIONS SAFETY & HEALTH - RADIOLOGICAL SAFETY

RADIOLOGICAL SURVEY REPORT (CONTINUATION SHEET)

ITEM NUMBER	GRID COORDINATES	DESCRIPTION	CORRECTED DOSE RATE (mRem/hr) γ CONTACT	β/γ CONTACT	γ 3 FT.	β/γ 3 FT.	DPM ALPHA 100 CM²	DPM ALPHA PROBE	DPM BETA-GAMMA 100 CM²	DPM BETA-GAMMA PROBE
44	Roof Level 630	Pipe coming out of roof					<MDA	4,000	25	12,000
45	Roof Level 630	Pipe coming out of roof					73	2,000	39	22,000
46	Level 630	Back Side Ledge North Side					106	2,000	180	100,000
47	Level 630	Back Side Ledge North Side					432	1,000	696	8,000
48	Level 630	Back Side Ledge North Side					39	3,000	139	12,000
49	Level 630	Back Side Ledge North Side					332	2,000	347	12,000
50	Level 630	Ledge East Side					206	6,000	413	80,000
51	Level 630	Ledge East Side					193	6,000	409	80,000
52	Level 630	Side East Side					31	1,000	34	10,000
53	Level 630	Ledge East Side					206	12,000	276	40,000
54	Level 630	Ledge East Side					307	12,000	564	60,000
55	Level 630	Side East Side					56	1,500	107	8,000
56	Level 630	Side East Side					198	18,000	345	50,000
57	Level 630	Ledge East Side					365	14,000	655	60,000
58	Level 630	Ledge East Side					47	500	62	50,000
59	Level 630	Ledge East Side					332	10,000	724	8,000
60	Level 630	Side East Side					114	8,000	231	50,000
61	Level 630	Ledge East Side					22	2,000	62	50,000
62	Level 630	Ledge East Side					106	12,000	281	10,000
63	Level 630	Motor above Y-Pipes					156	5,000	217	16,000
64	Level 630	Motor above Y-Pipes					240	4,000	582	10,000
65	Level 630	Motor					232	3,000	701	8,000
66	Level 630	Y-Pipes					265	2,000	454	10,000
67	Level 630	Y-Pipes					466	12,000	829	40,000
68	Level 630	Y-Pipes					265	10,000	340	50,000
69	Level 630	Bottom of P.C. South Side					198	16,000	267	100,000
70	Level 630	Bottom of P.C. South Side					181	500	185	8,000

FMPC
OPERATIONS SAFETY & HEALTH - RADIOLOGICAL SAFETY

RADIOLOGICAL SURVEY REPORT (CONTINUATION SHEET)

5111

ER	GRID COORDINATES	DESCRIPTION	CORRECTED DOSE RATE (mRem/hr) γ CONTACT	β/γ CONTACT	γ 3 FT.	β/γ 3 FT.	DPM ALPHA 100 CM²	DPM ALPHA PROBE	DPM BETA-GAMMA 100 CM²	DPM BETA-GAMMA PROBE
	Level 610	Bottom of P.C. South Side					240	2,000	217	10,000
	Level 610	Bottom of P.C. South Side					KMOA	1,500	62	8,000
	Level 610	Bottom of P.C. South Side					198	6,000	372	60,000
	Level 610	Bottom of P.C. East Side					198	5,000	313	50,000
	Level 610	Bottom of P.C. East Side					575	20,000	865	20,000
	Level 610	Bottom of P.C. East Side					114	1,000	130	8,000
7	Level 610	Bottom of P.C. North Side					206	10,000	432	60,000
	Level 610	Bottom of P.C. North Side					307	14,000	610	50,000
	Level 610	Bottom of P.C. North Side					6	500	43	10,000
0	Level 610	Bottom of P.C. West Side					181	10,000	496	60,000
1	Level 610	Bottom of P.C. West Side					81	8,000	180	26,000
2	Level 610	Bottom of P.C. West Side					39	4,000	34	10,000
3	Level 610	Bottom Flange of P.C.					2516	30,000	3806	28,000
34	Level 610	Pipe					173	2,000	244	12,000
35	Level 600	Pipe					391	12,000	701	25,000
36	Level 600	Pipe					591	10,000	815	14,000
37	Level 600	Top of Drum Station					73	3,000	203	100,000
38	Level 600	Side of Drum Station					123	2,000	212	4,000
39	Level 600	Front of Drum Station					391	2,000	683	6,000
40	Level 600	Back of Drum Station					257	10,000	363	16,000

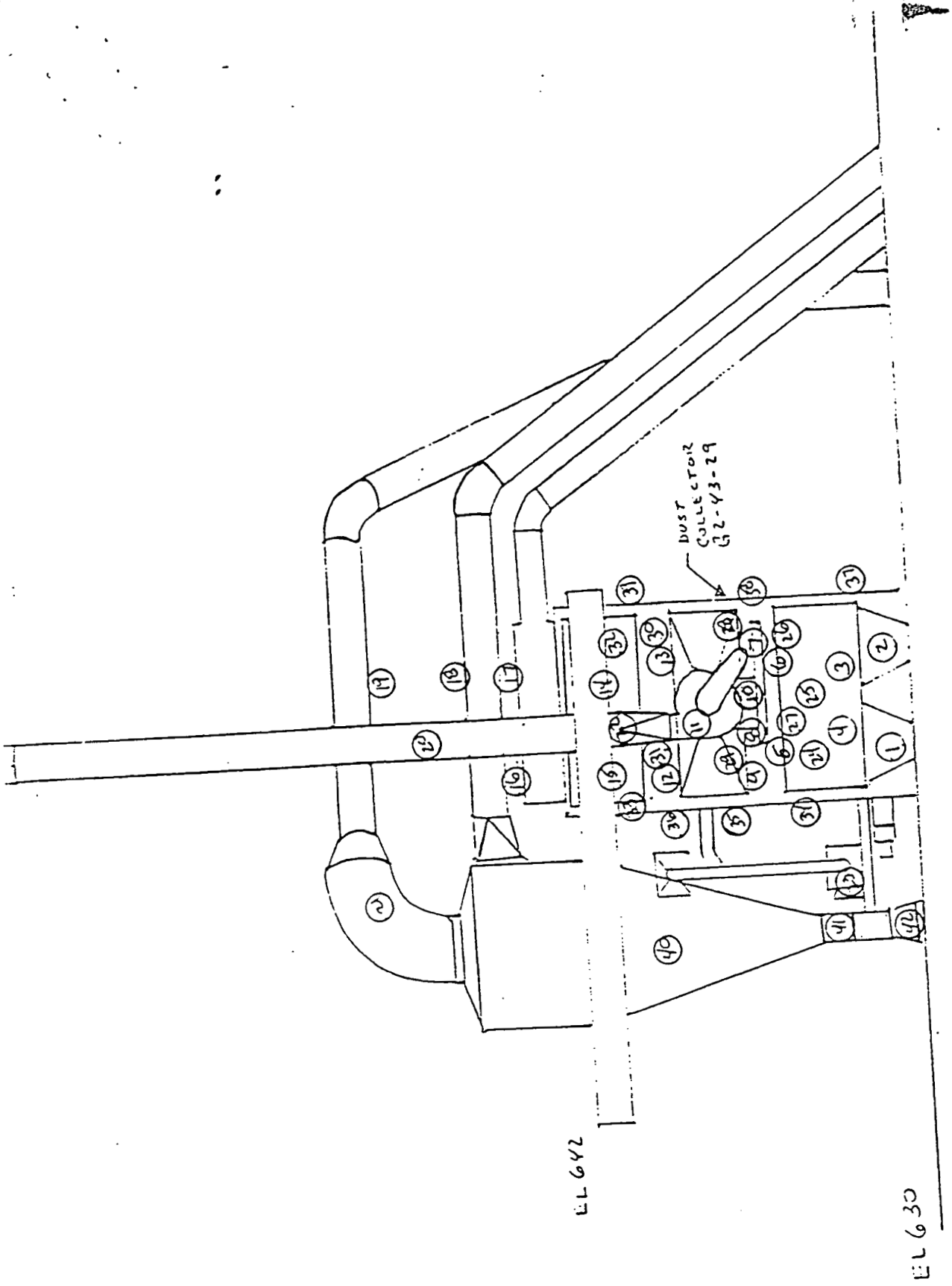
DUST COLLECTOR G2-43-29
EL 642
EL 630

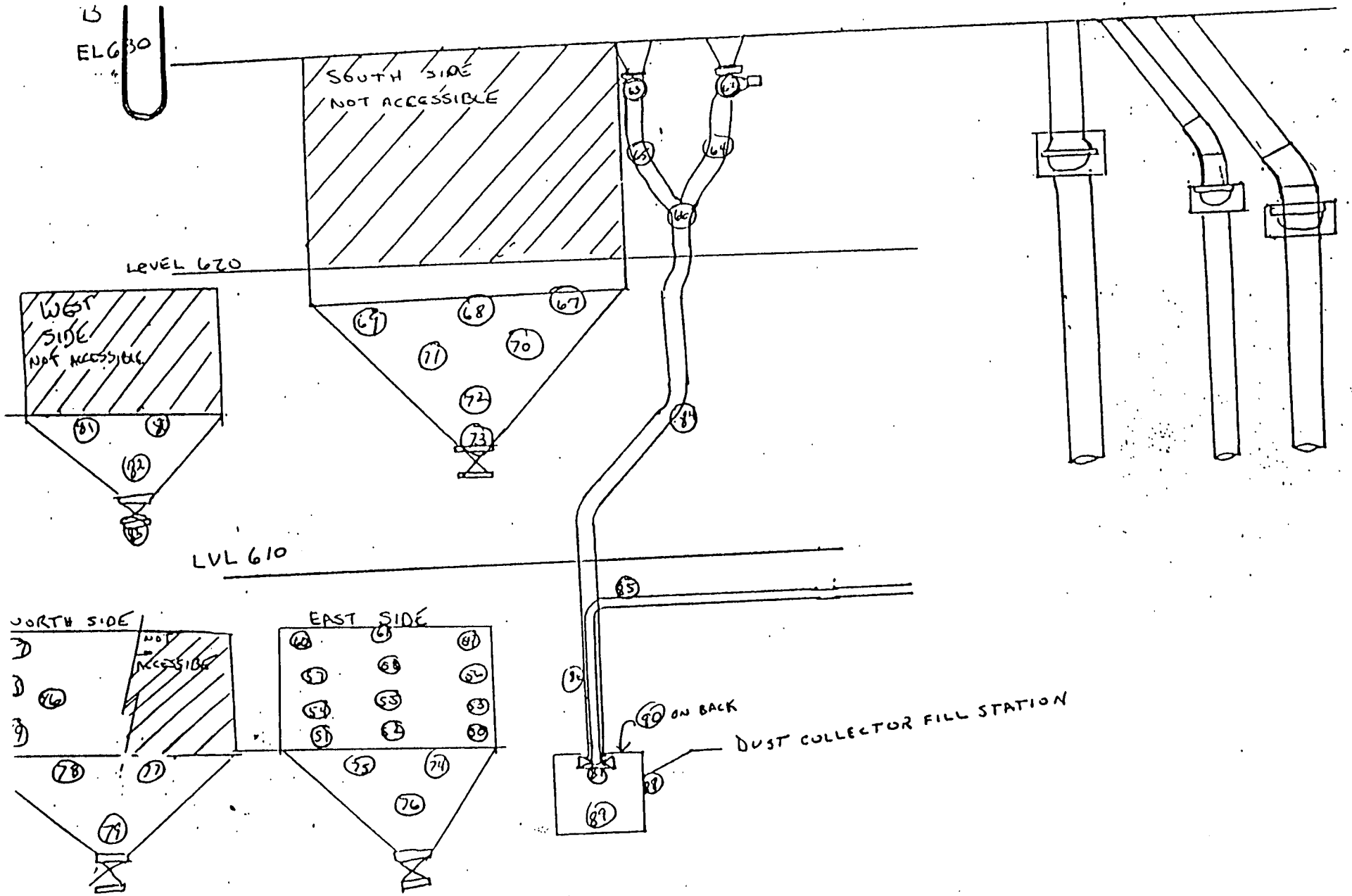
ELG 30
SOUTH SIDE
NOT ACCESSIBLE
LEVEL 620
WEST SIDE
NOT ACCESSIBLE
LVL 610
NORTH SIDE
NOT ACCESSIBLE
EAST SIDE
ON BACK
DUST COLLECTOR FILL STATION

FMPC
OPERATIONS SAFETY & HEALTH - RADIOLOGICAL SAFETY

RADIOLOGICAL SURVEY REPORT

4/22/90	LOCATION: PLANT 8	RST: AFH/LWJ	Page 1 of 8
0718.	LEVEL: (BLDG. 8A) 600'		

SURVEY: ☐ ROUTINE ☒ SPECIAL REQUEST ☐ RWP ☐ INCIDENT

3-27 DUST COLLECTOR SYSTEM
E- DEMOLITION / CONSTRUCTION
RVEY - 2ND FLOOR, DRY END, LOCATED
NTAMINATED AREA: CONTAMINATION LIMITS:
00 DPM/100cm² ALPHA > 5000 DPM/100cm² BETA-GAMMA

-UP SURVEY ATTACHED	☐YES ☐NO
MAP ATTACHED	☒YES ☐NO

INSTRUMENTS

MODEL	SERIAL NUMBER	CALIBRATION DATE	BKRD.	EFF.
14C-4	44505	JAN. 90	150cpm	CF=1
LB 5100	4	11/28/89 α	0.54	0.279
		BY	2.74	0.435

ANALYZE FOR: ☒ ALPHA ☒ BETA-GAMMA ☐ OTHER

TYPE OF SURVEY: ☒ CONTAMINATION ☒ RADIATION ☐ OTHER

GRID COORDINATES	DESCRIPTION	CORRECTED DOSE RATE (mRem/hr) γ CONTACT	β/γ CONTACT	γ 3 FT.	β/γ 3 FT.	DPM ALPHA 100 CM²	DPM ALPHA PROBE	DPM BETA-GAMMA 100 CM²	DPM BETA-GAMMA PROBE
MAP 2 8A-600-11B	MOTOR @ BOTTOM OF DUST COLLECTOR					365	29,000	783	249,000
	SIDE OF DUST COLLECTOR					1177	8,000	2660	7,000
	SIDE OF DUST COLLECTOR					357	1,600 ~~2,000~~	1,573	4,000
	SIDE OF DUST COLLECTOR					374	3,000	847	15,000
	LIP AT BOTTOM					374	2,2000	674	60,000
	SIDE OF PANEL					483	2,2000	998	60,000
	FRAME OF DUST COLLECTOR					1068	2,2000 ~~1,000~~	2482	60,000 ~~350,000~~
	N. FRONT OF DUST COLLECTOR					834	16,000	1765	350,000
	SIDE OF DUST COLLECTOR					558	4000	1313	160,000
	SIDE OF DUST COLLECTOR					516	6,000	1007	60,000
	SIDE OF DUST COLLECTOR					399	6,000	756	60,000
	LIP OF PANEL					340	26,000	792	180,000
	TOP OF PANEL					1027	25,000	2007	150,000
	TOP LIP					4876	10,000	11,610	20,000
	TOP LIP					3914	10,000	6943	20,000
↓	TOP OF OUTLET					642	4,000	1012	90,000

DISTRIBUTION OF COPIES
adiological Safety Technician Supervisor
adiological Safety Engineer
acility Supervisor

NOTIFICATION OF SURVEY RESULTS

SUPERVISOR NOTIFIED	TIME	DATE	NOTIFIED BY	REVIEWED BY	DATE

FMPC

OPERATIONS SAFETY & HEALTH - RADIOLOGICAL SAFETY

RADIOLOGICAL SURVEY REPORT (CONTINUATION SHEET)

ITEM NUMBER	GRID COORDINATES	DESCRIPTION	CORRECTED DOSE RATE (mRem/hr) γ CONTACT	β/γ CONTACT	γ 3 FT.	β/γ 3 FT.	DPM ALPHA 100 CM²	DPM ALPHA PROBE	DPM BETA-GAMMA 100 CM²	DPM BETA-GAMMA PROBE
17	MAP 2 8A-GCO-11B	TOP OF VENT DUCT					332	8,000	664	12,000
18		FACE OF DOOR PANEL					533	22,000	911	60,000
19		TOP OF LIP					449	7,000	1180	100,000
20		TOP OF DUCT					550	4,000	838	60,000
21		BOTTOM LIP					1780	10,000	3190	6,000
22		FRAME OF PANEL					324	20,000	861	60,000
23		TOP LIP					491	8,000	824	12,000
24		PIPE					533	8,000	993	120,000
25		TOP OF PIPE					407	8,000	897	100,000
26		TOP OF LIP					466	9000	870	70,000
27		UPPER PANEL FRAME					491	4,000	765	40,000
28		TOP OF DUCT					491	4,000	1071	40,000
29		TOP OF DUCT					575	6,000	1313	40,000
30		TOP OF DUCT					683	6,000	1144	40,000
31		TOP OF DUCT					441	5,000	815	30,000
32		TOP OF DUCT					466	4,000	906	30,000
33		UPPER LIP OF BOX					324	6,000	569	140,000
34		LIP OF VENT					457	6,000	925	120,000
35		UPPER LIP OF BOX					441	6,000	811	120,000
36		LIP OF VENT					491	6,000	724	120,000
37		FRAME ON PANEL					616	12,000	1066	80,000
38		TOP OF EVACUATION SUCTION					449	12000	605	80,000
39		TOP OF EVACUATION SUCTION					801	12000	1865	80,000
40		UPPER LIP OF PANEL					424	7,000	738	80,000
41		FRONT OF PANEL					1370	7,000	2167	70,000
42		UPPER LIP OF PANEL					332	8,000	719	20,000
43	↓	FRONT OF PANEL					140	8,000	231	40,000

FMPC
OPERATIONS SAFETY & HEALTH - RADIOLOGICAL SAFETY

RADIOLOGICAL SURVEY REPORT (CONTINUATION SHEET)

ITEM NUMBER	GRID COORDINATES	DESCRIPTION	CORRECTED DOSE RATE (mRem/hr) γ CONTACT	β/γ CONTACT	γ 3 FT.	β/γ 3 FT.	DPM ALPHA 100 CM²	DPM ALPHA PROBE	DPM BETA-GAMMA 100 CM²	DPM BETA-GAMMA PROBE
4	MAP 2 8A-600-11B	TOP OF CHIMNEY					156	7000	272	120,000
5		FRONT OF DUST COLLECTOR					842	7000	1555	100,000
6		FRAME OF WALKWAY					2140	7000	3194	100,000
7		LIP OF PANEL					801	8000	1203	220,000
8		FRONT OF PANEL					~~2140~~ 374	8000	523	200000
9		PLATFORM RAIL					~~801~~ 667	8000	1071	200,000
50		UPPER LIP OF PANEL					~~374~~ 1109	7000	1856	80,000
51		LOWER LIP OF DUST COLLECTOR INLET					~~667~~ 466	7000	706	80,000
52		TOP OF DUCT WORK					658	10,000	929	100,000
53	MAP 1 8A-600-11B	TOP OF DUST COLLECTOR FUNNEL					775	10,000	1162	100,000
54	8A-600-11C	TOP OF PIPE					466	7,000	811	180,000
55	11C	TOP OF PIPE					968	3,000	1728	50,000
56	11C	TOP OF DUST COLLECTOR FUNNEL					541	5000	824	70,000
57	8A-600-11B	TOP OF PIPE					616	2,000	1285	16000
58	12B	TOP OF PIPE					650	7000	1276	12000
59	12B	TOP OF PIPE					616	7000	1094	20000
60	12B	TOP OF PIPE					926	5000	2025	10000
61	11B	TOP OF DUST COLLECTOR					656	5000	1578	11000
62	11B	TOP OF DUST COLLECTOR					616	5400	1601	14000
63	11B	TOP OF DUST COLLECTOR					633	4600	1372	12000
64	11B	LISTED IN 12C SIDE OF PIPE 20'					391	5000	445	280,000
65	11B	LISTED IN 12C SIDE OF PIPE 14"					1077	28,000	1523	240,000
66	11C	TOP OF PIPE					734	5000	1582	30,000
67	11C	TOP OF PIPE					1194	7,000	2327	76,000
68	11C	TOP OF PIPE					985	5600	2130	180000
69	11B	DUST COLLECTOR SIDE COVER					566	2000	1043	40000
70	11B	DUST COLLECTOR SIDE COVER					734	4300	1267	54000

FMPC

5111

OPERATIONS SAFETY & HEALTH - RADIOLOGICAL SAFETY

RADIOLOGICAL SURVEY REPORT (CONTINUATION SHEET)

ITEM NUMBER	GRID COORDINATES	DESCRIPTION	CORRECTED DOSE RATE (mRem/hr) γ CONTACT	β/γ CONTACT	γ 3 FT.	β/γ 3 FT.	DPM ALPHA 100 CM²	DPM ALPHA PROBE	DPM BETA-GAMMA 100 CM²	DPM BETA-GAMMA PROBE
71	8A-600-11B	TOP OF PIPE					374	3200	733	4[illegible]
72	11B	TOP OF BLOWER MOTOR					407	1200	797	6600
73	11B	TOP OF BLOWER					650	2000	1820	3000
74	11A	TOP OF PIPE					516	2200	1212	5000
75	11B	TOP OF PIPE					290	2400	377	6000
76	11B	TOP OF PIPE					206	1200	222	7000
77	11B	TOP OF DUST COLLECTOR FUNNEL					826	6000	1847	20000
78	11B	TOP OF PIPE					985	5000	1916	20000
79	11B	TOP OF PIPE					658	3000	1226	16000
80	11B	TOP OF PIPE					759	4000	1491	18000
81	11B	BOX FILTER TOP					190	9000	336	100000
82	11B	LISTED 11A SIDE OF PIPE 8' 1 FROM FLOOR					566	20000	938	50000
83	10B	TOP OF PIPE					842	10,000	1427	80,000
84	11B	TOP FILTER SEPARATOR					1135	12,000	2742	120,000
85	11B	TOP OF PLATFORM					190	2200	249	110000
86	11B	TOP OF BLOWER					290	2200	601	5000
87	11B	LISTED 12D SIDE OF PIPE 7'					399	3000	628	25,000
88	11B	MOTOR COVER					491	24000	838	180,000
89	11B	TOP OF PIPE					834	2600	1171	80,000
90	11B	TOP OF PIPE					993	7000	1628	200,000
91	11B	MOTOR COVER					851	40,000	1550	60,000
92	11B	MOTOR COVER					1119	6000	1445	60,000
93	11C	TOP OF PIPE					524	4000	696	80,000
94	11C	TOP OF PIPE					600	9500	1331	60,000
95	11C	TOP OF FLANGE					1077	18000	2445	40,000
96	11D	SIDE OF PIPE 8'					441	2000	774	18,000
97	11C	TOP OF PIPE					1997	30000	3865	120,000

FMPC

OPERATIONS SAFETY & HEALTH - RADIOLOGICAL SAFETY

RADIOLOGICAL SURVEY REPORT (CONTINUATION SHEET)

	GRID COORDINATES	DESCRIPTION	CORRECTED DOSE RATE (mRem/hr) γ CONTACT	β/γ CONTACT	γ 3 FT.	β/γ 3 FT.	DPM ALPHA 100 CM²	DPM ALPHA PROBE	DPM BETA-GAMMA 100 CM²	DPM BETA-GAMMA PROBE
	8A-600- 11D	TOP OF PIPE					340	5000	738	18,000
	11D	DRIVE COVER					1261	6000	3432	11,000
	11D	TOP OF PIPE					750	7500	2295	8,000
	11D	TOP OF PIPE					616	1000	998	5,000
	11D	TOP OF FUNNEL					893	2000	2112	6,000
3	11D	TOP OF INTAKE FILTER					700	1500	1441	22,000
4	11D	TOP OF PIPE					558	5,000	1258	26,000
	11D	DRIVE COVER					432	5,000	614	35,000
6	11D	TOP OF PIPE					1437	4,500	3642	12,000
7	11D	TOP OF SCRUBBER					1027	5,000	2464	35,000
8	11D	TOP OF FUNNEL					1805	10,000	3130	100,000
9	10D	TOP OF PIPE					1328	16,000	3381	14,000
0	10D	TOP OF PIPE					1654	20,000	3464	6,000
	10D	TOP OF PIPE					1788	18,000	3797	10,000
2	10D	TOP OF SCRUBBER					357	10,000	601	26,000
3	10D	TOP OF SCRUBBER					1462	10,000	2432	5,000
4	10D	SIDE OF PIPE					1579	8,000	2861	28,000
15	10D	TOP OF COVER					775	44,000	1276	40,000
16	12D	TOP OF PIPE					1194	2,000	3030	8,000
17	12D	TOP OF PIPE					1194	2,000	2048	8,000
18	12D	TOP OF FILTER COVER					642	5,000	1345	50,000
19	12D	TOP OF FILTER COVER					976	5,000	1966	70,000
20	12C	TOP OF PIPE					834	2,000	2057	8,000
21	12C	TOP OF PIPE					859	2,000	1911	8,000
22	12C	TOP OF PIPE					616	2,000	1103	8,000
23	12B	TOP OF PIPE					683	2,000	1153	8,000
24	12B	TOP OF PIPE					876	2,000	1509	8,000

FMPC

OPERATIONS SAFETY & HEALTH - RADIOLOGICAL SAFETY

RADIOLOGICAL SURVEY REPORT (CONTINUATION SHEET) 74 - 2

#	GRID COORDINATES	DESCRIPTION	CORRECTED DOSE RATE (mRem/hr) γ CONTACT	β/γ CONTACT	γ 3 FT.	β/γ 3 FT.	DPM ALPHA 100 CM²	DPM ALPHA PROBE	DPM BETA-GAMMA 100 CM²	DPM BETA-GAMMA PROBE
[illegible]	8A-600-11B	TOP OF PIPE					1319	2,000	2998	8,000
[illegible]	10B	TOP OF PIPE					215	4,000	304	24,000
[illegible]	10B	TOP OF PIPE					424	30,000	756	100,000
[illegible]		TOP OF PIPE					1068	5,000	2345	40,000
[illegible]	10B	TOP OF PIPE					951	5,000	3107	22,000
[illegible]	10B	TOP OF PIPE					700	12,000	1454	200,000
[illegible]	10B	TOP OF PIPE					683	10,000	1505	10,000
[illegible]	10B	TOP OF PIPE					792	10,000	1377	14,000
3	9A	TOP OF PIPE					524	5,000	1194	10,000
4	9A	TOP OF PIPE					424	5,000	774	10,000
5	10A	TOP OF PIPE					424	6,000	820	10,000
36	10A	TOP OF PIPE					616	5,000	1779	10,000
37	10A	TOP OF PIPE					449	8,000	806	12,000
38	11A	TOP OF PIPE					223	8,000	345	18,000
39	11A	TOP OF PIPE					775	5,000	1386	35,000
40	9A	TOP OF PIPE					600	4,000	1185	10,000
41	8A	TOP OF PIPE					667	4,000	1057	8,000
42	8A	TOP OF PIPE					650	5,000	1034	10,000
43	8A	TOP OF PIPE					976	5,000	1683	8,000
44	8A	TOP OF PIPE					792	4,000	1579	8,000
45	10C	SIDE OF PIPE 7'					1043	1,000	1669	5,000
46	11C	SIDE OF PIPE 7'					1169	1,000	1710	5,000
47	11D	SIDE OF PIPE 6'					357	7,000	363	70,000
48	11D	TOP OF PIPE					1018	12,000	1582	120,000
49	11C	TOP OF PIPE					2206	10,000	3806	60,000
50	11D	TOP OF PIPE					943	10,000	2053	50,000
51	8A	TOP OF PIPE					675	10,000	920	80,000

FMPC
OPERATIONS SAFETY & HEALTH - RADIOLOGICAL SAFETY

5111

RADIOLOGICAL SURVEY REPORT (CONTINUATION SHEET)

M BER	GRID COORDINATES	DESCRIPTION	CORRECTED DOSE RATE (mRem/hr) γ CONTACT	β/γ CONTACT	γ 3 FT.	β/γ 3 FT.	DPM ALPHA 100 CM²	DPM ALPHA PROBE	DPM BETA-GAMMA 100 CM²	DPM BETA-GAMMA PROBE
2	8A-600 - 8A	TOP OF PIPE					2098	10000	2888	40000
53	8A	TOP OF PIPE					1244	6000	2778	10000
54	8A	TOP OF PIPE					826	4000	1427	10000
55	11C	TOP OF PIPE					608	10000	1345	350000
56	10C	TOP OF PIPE					407	12000	715	60000
57	10C	TOP OF PIPE					1855	45000	3770	60000
58	10C	TOP OF PIPE					558	8000	1153	50000
59	9C	TOP OF PIPE					968	6000	1573	40000
60	9B	TOP OF PIPE					1371	50000	2158	380000
61	9B	TOP OF PIPE					801	14000	1614	16000
62	9B	TOP OF PIPE					1227	6000	3953	100000
63	9B	SIDE OF PIPE 12'					876	8000	1331	160000
64	9B	TOP OF PIPE					692	10000	1386	200000
65	11C	TOP OF PIPE					650	10000	1655	120000
166	10C	TOP OF PIPE					859	18000	1856	100000
167	11D	TOP OF PIPE					1629	6000	3436	10000
168	8B	TOP OF PIPE					156	7000	473	28000
169	8B	TOP OF PIPE					420	7000	779	10000
170	8B	TOP OF PIPE					1428	2000	2728	12000
171	8B	TOP OF DRUM FILLING STATION					332	7000	724	40000
172	8B	TOP OF FILLING FLANGE					3135	5000	13413	24000
173	8B	INSIDE SIDE-WEST-DRUM FILLING STATION					7847	25000	20756	50000
174	7B	INSIDE EXHAUST					591	14000	893	80000
175	7B	SIDE OF PIPE 8'					340	2500	491	3200
176	7B	TOP OF BOX FILTER					324	10000	441	70000
177	8B	TOP OF PIPE					575	10000	1121	40000
178	8B	TOP OF PIPE					332	10000	646	30000

FMPC

OPERATIONS SAFETY & HEALTH - RADIOLOGICAL SAFETY

RADIOLOGICAL SURVEY REPORT (CONTINUATION SHEET)

5111

GRID COORDINATES	DESCRIPTION	CORRECTED DOSE RATE (mRem/hr)				DPM ALPHA		DPM BETA-GAMMA	
		γ	β/γ	γ	β/γ				
		CONTACT	CONTACT	3 FT.	3 FT.	100 CM²	PROBE	100 CM²	PROBE
8A-600-8B	TOP OF PIPE					742	2000	1605	10000
9B	TOP OF PIPE					346	3000	573	12000
8B	SIDE OF PIPE 20'					1512	2000	2144	10000
9B	TOP OF PIPE					165	3000	313	10000

022

DSAM-1993-2 (REV. 11/4/88)

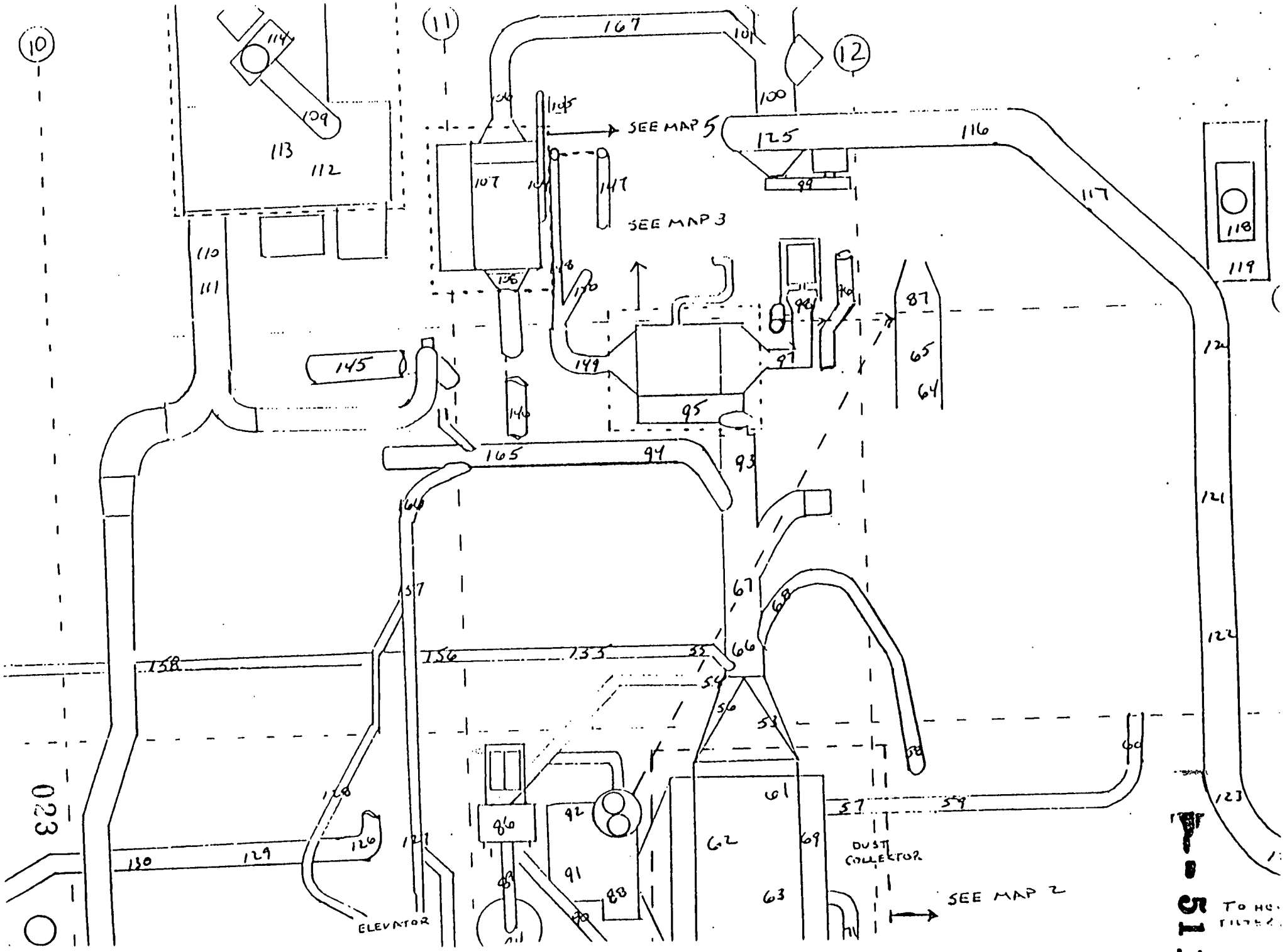

10
11
12
SEE MAP 5
SEE MAP 3
SEE MAP 2
DUST COLLECTOR
ELEVATOR
167
101
100
125
116
117
118
119
114
109
113
112
107
147
110
111
145
149
95
97
87
65
64
165
94
93
166
157
158
156
155
55
67
68
66
54
56
53
58
60
61
57
59
62
69
63
92
91
88
86
128
126
127
129
130
123
122
121

023

5111

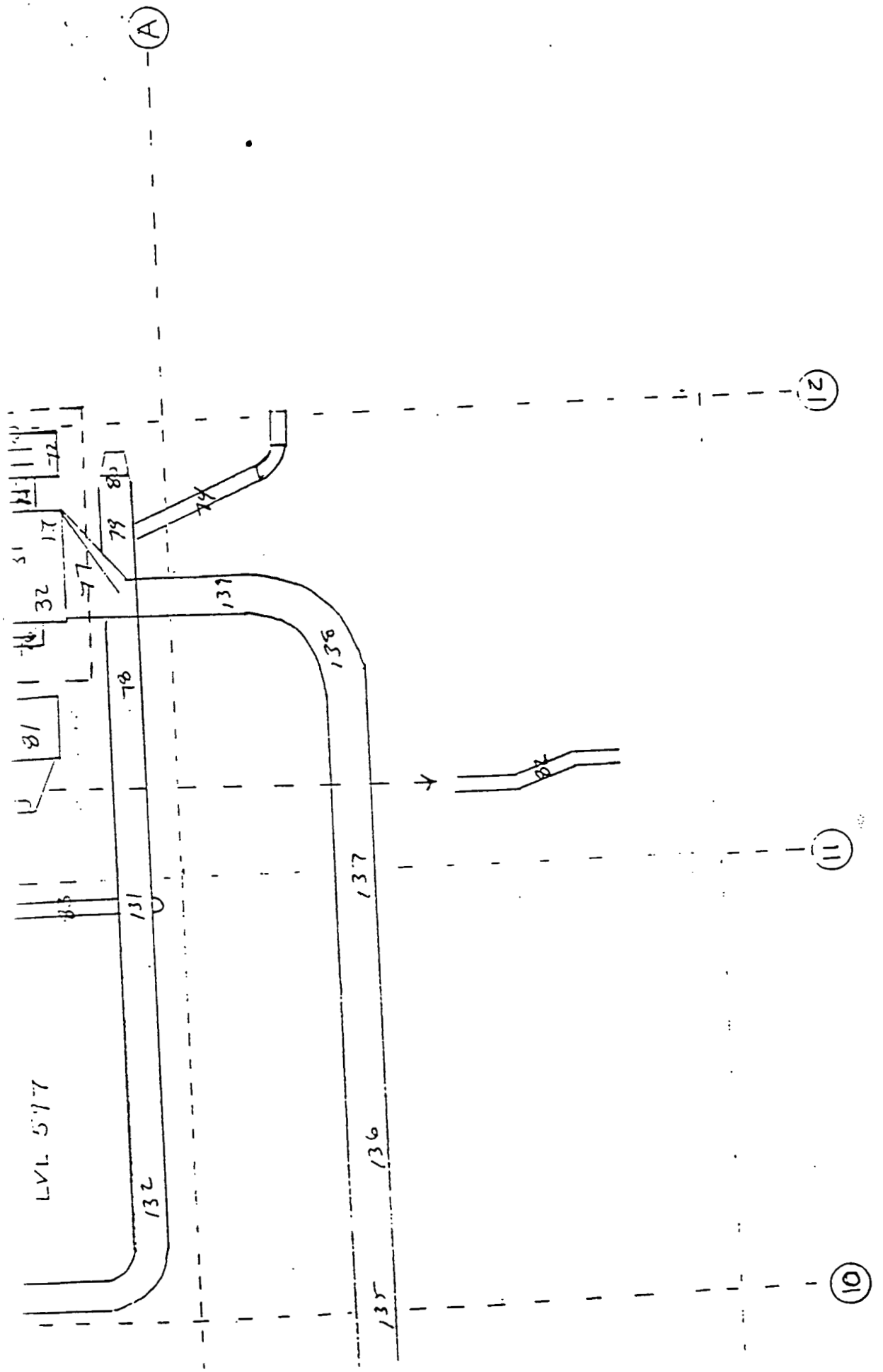
A
12
11
10
LVL 577
132
131
78
81
32
77
79
74
137
136
135

MAP 1C
LVL 597

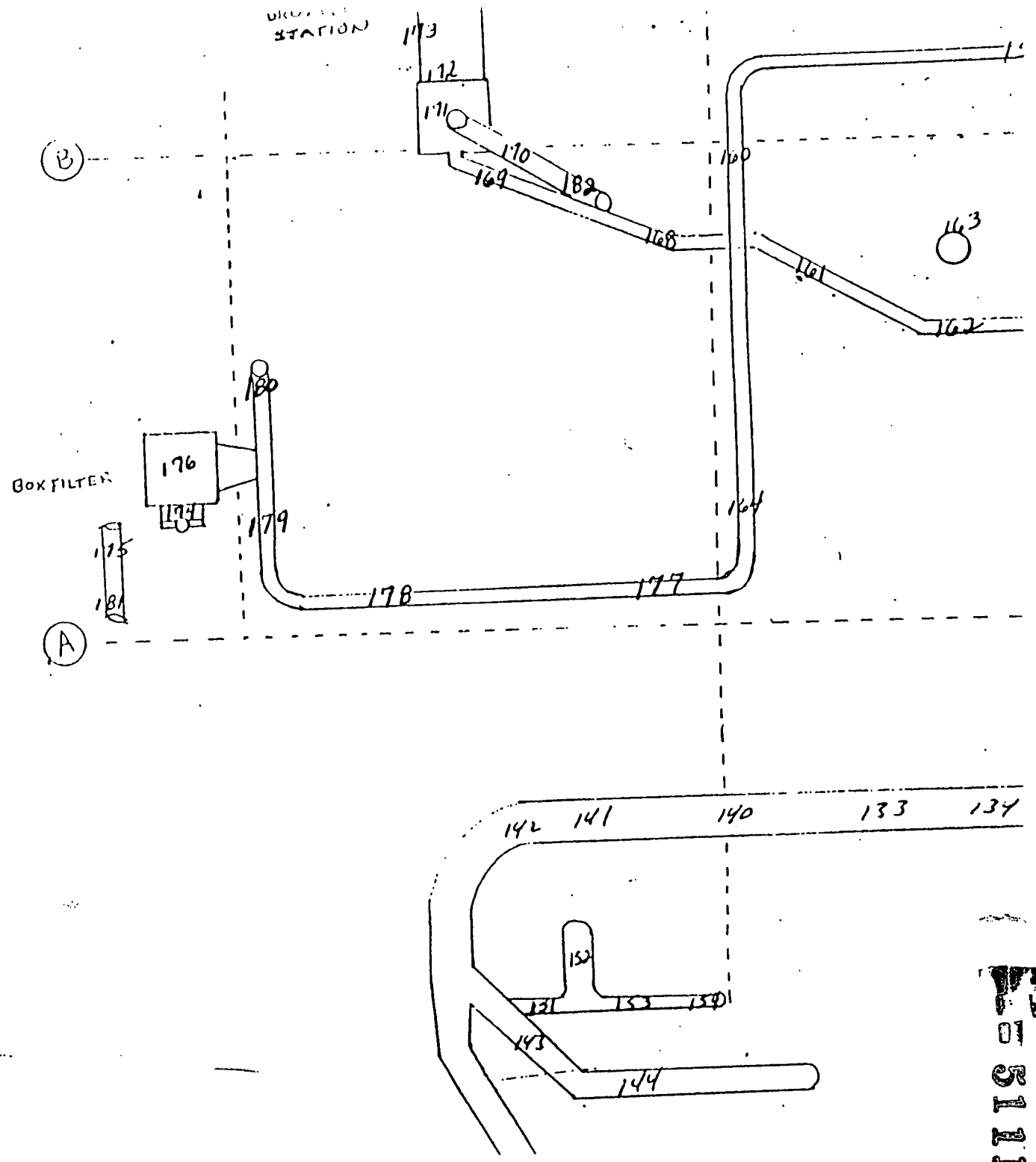

025

N. SIDE

5111

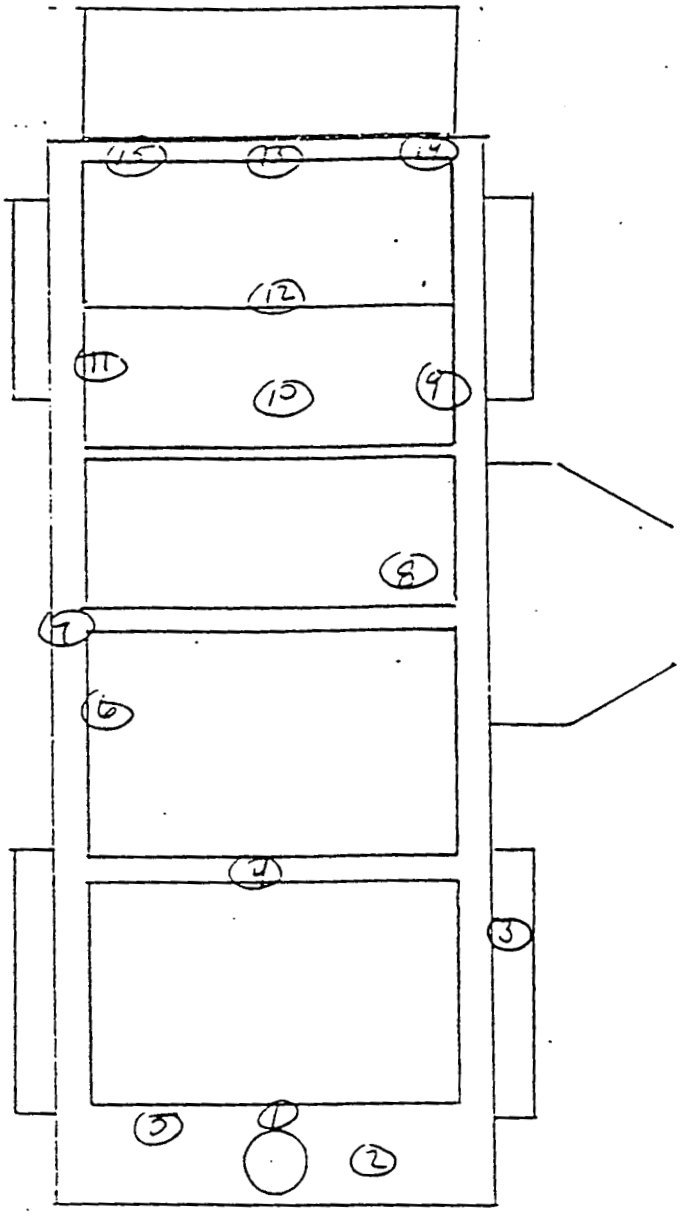

E. SIDE

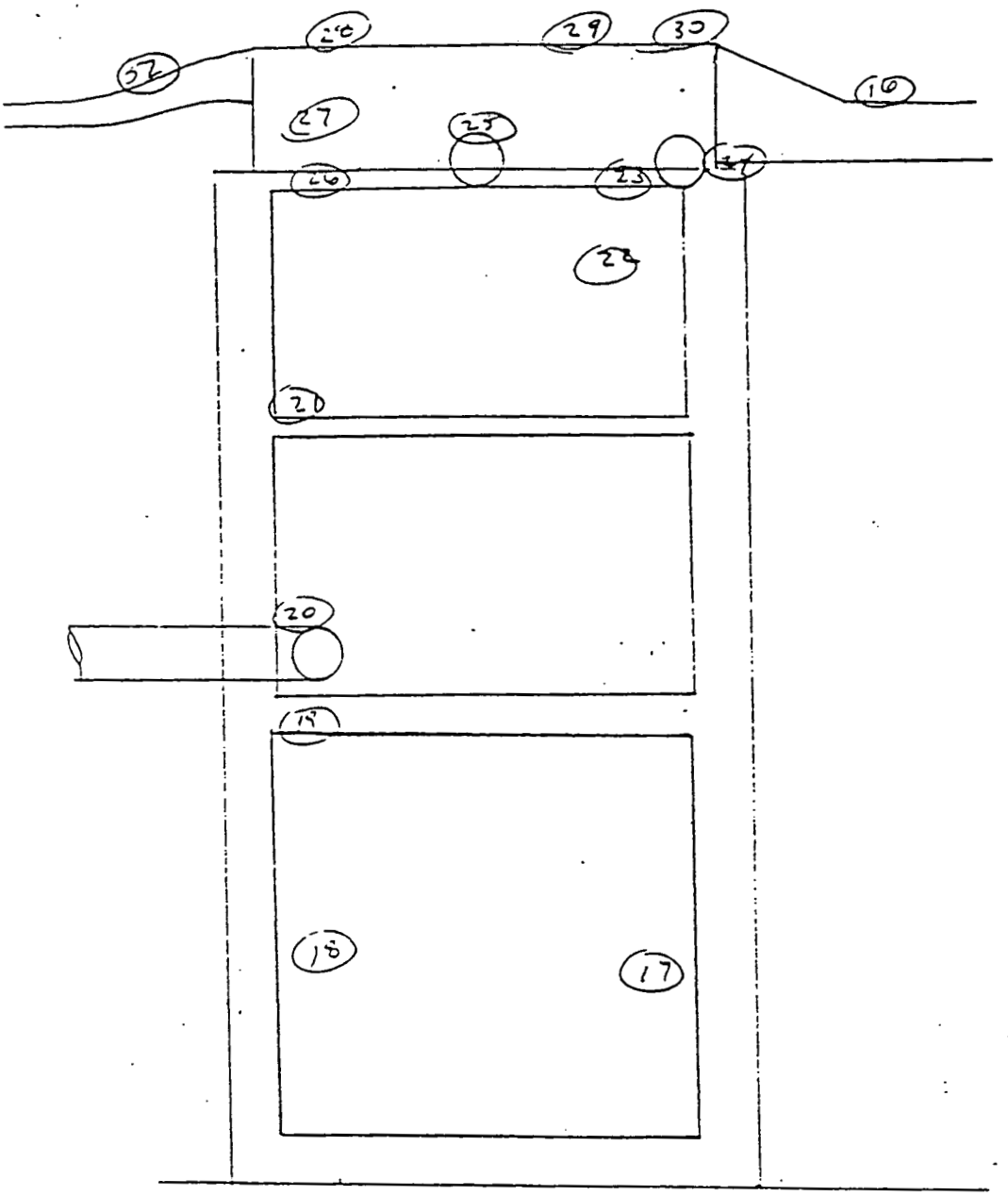

W SIDE

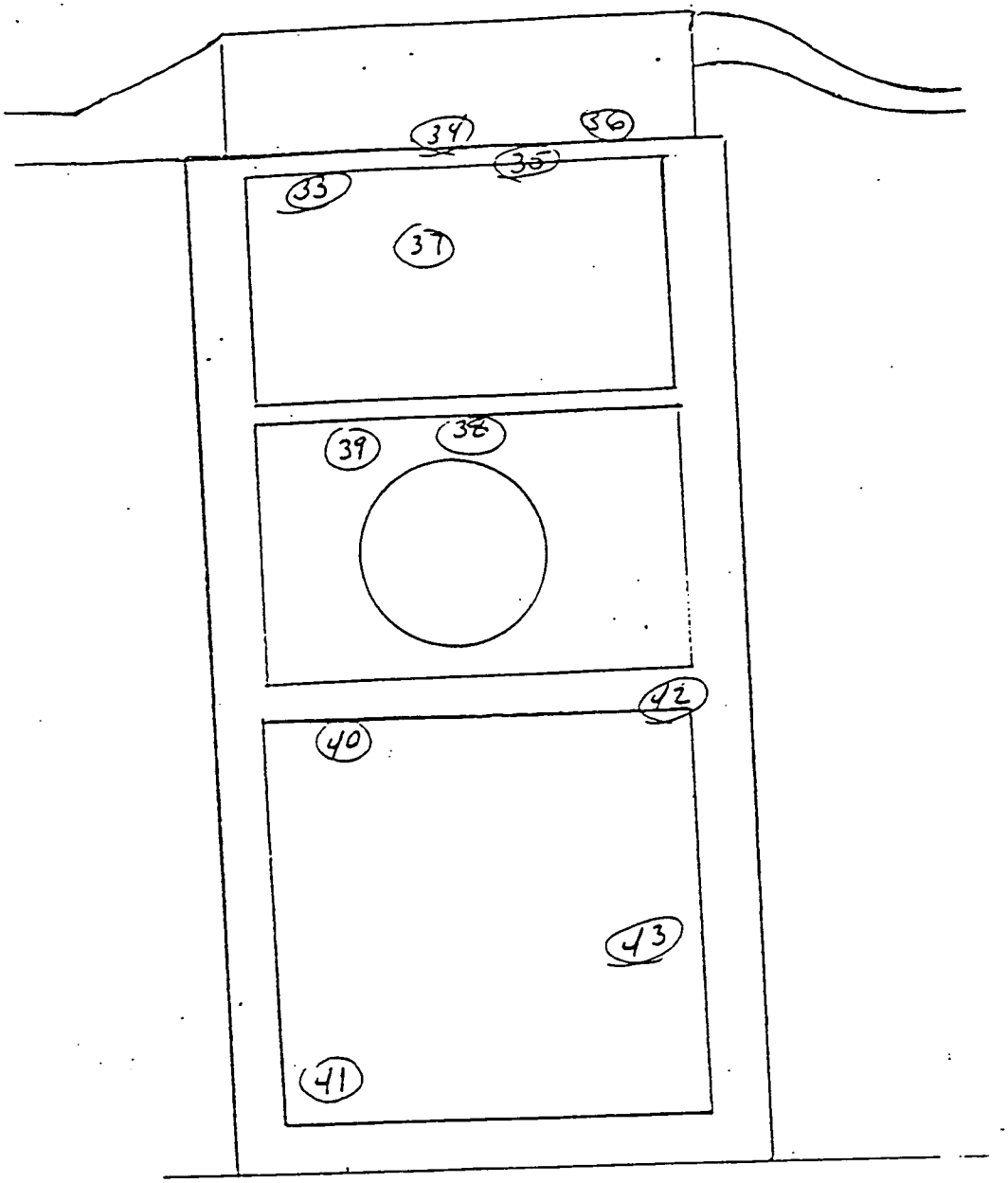

S. SIDE

5111

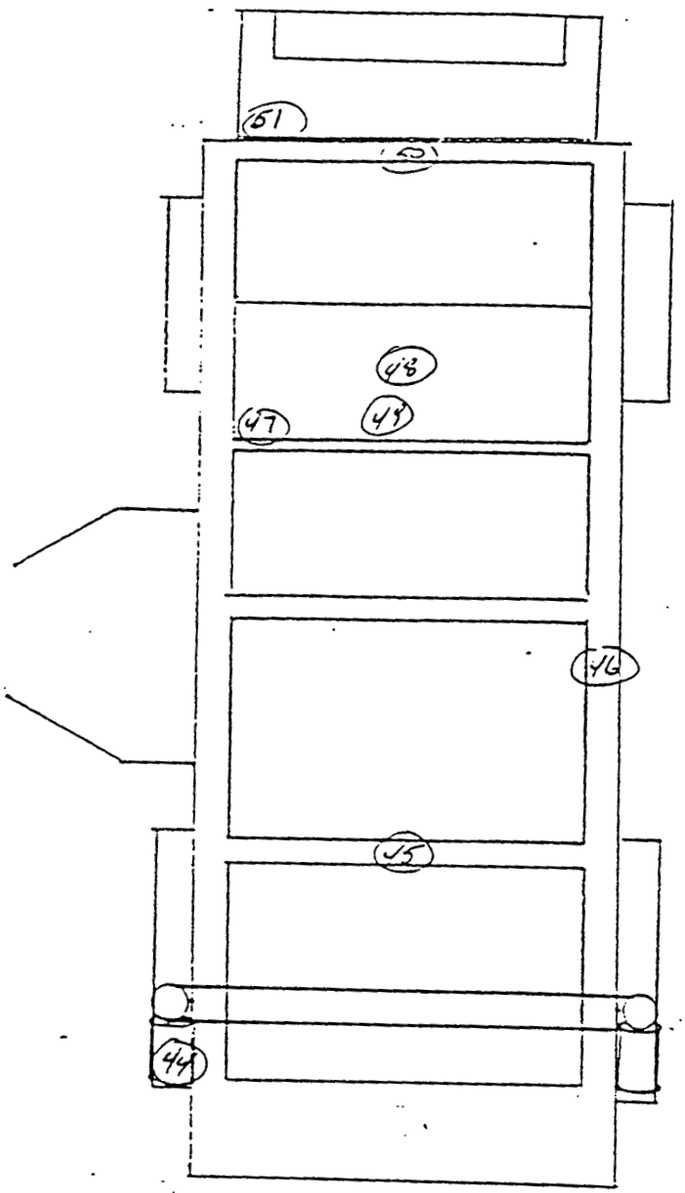

FMPC

OPERATIONS SAFETY & HEALTH - RADIOLOGICAL SAFETY

RADIOLOGICAL SURVEY REPORT

5111

Date: 4-26-90	LOCATION: Pt #8	RST: LWJ/BAH	Page 1 of 2
Time: 1700	LEVEL: 600		

REASON FOR SURVEY: ☐ ROUTINE ☒ SPECIAL REQUEST ☐ RWP ☐ INCIDENT

COMMENTS:

Pre Equipment Removal Survey for Construction. Survey performed Around Dust Collector G8-021

* Survey Performed inside a contaminated Area

FOLLOW-UP SURVEY ATTACHED ☐YES ☒NO

SURVEY MAP ATTACHED ☒YES ☐NO

INSTRUMENTS

MODEL	SERIAL NUMBER	CALIBRATION DATE	BKRD.	EFF.
FM-177	59179	7/90	0	10
14C	~~38387~~	Sep. 90	200	10
LB5100	#4 44499	11/90	α/5.8	.56/2.74	.239/.4

ANALYZE FOR: ☒ ALPHA ☒ BETA-GAMMA ☐ OTHER

TYPE OF SURVEY: ☒ CONTAMINATION ☒ RADIATION ☐ OTHER

ITEM NUMBER	GRID COORDINATES	DESCRIPTION	CORRECTED DOSE RATE (mRem/hr) γ CONTACT	β/γ CONTACT	γ 3 FT.	β/γ 3 FT.	DPM ALPHA 100 CM²	DPM ALPHA PROBE	DPM BETA-GAMMA 100 CM²	DPM BETA-GAMMA PROBE
1	8A-600-11/C	Motor Mount					1169	900	3838	450,
2		Frame					775	500	1760	160,
3		Front Lip Door					1152	500	2258	140,
4		Side Lip Door					5336	400	14532	140,
5		Controller Casing					1596	1,400	3660	210,
6		Door Lip					1018	1,000	2505	400,
7		Door Lip					2466	1,000	7034	260,
8		Blower Inlet					332	600	733	17,0
9		Duct					64	1,000	135	12,0
10		Duct					483	4,000	852	35,0
11		Duct					558	2,000	1103	20,
12		Motor Mount					2031	2,000	11436	600
13		Door Lip					466	3,000	902	280,
14		Door					349	10,000	646	200
15		Door					1939	12,000	5911	160
16		Side of D.C.					2943	10,000	7738	100

NO.	DISTRIBUTION OF COPIES
1	Radiological Safety Technician Supervisor
2	Radiological Safety Engineer
3	Facility Supervisor

NOTIFICATION OF SURVEY RESULTS

SUPERVISOR NOTIFIED	TIME	DATE	NOTIFIED BY	REVIEWED BY	DATE

DUST COLLECTOR

G8-021 5111

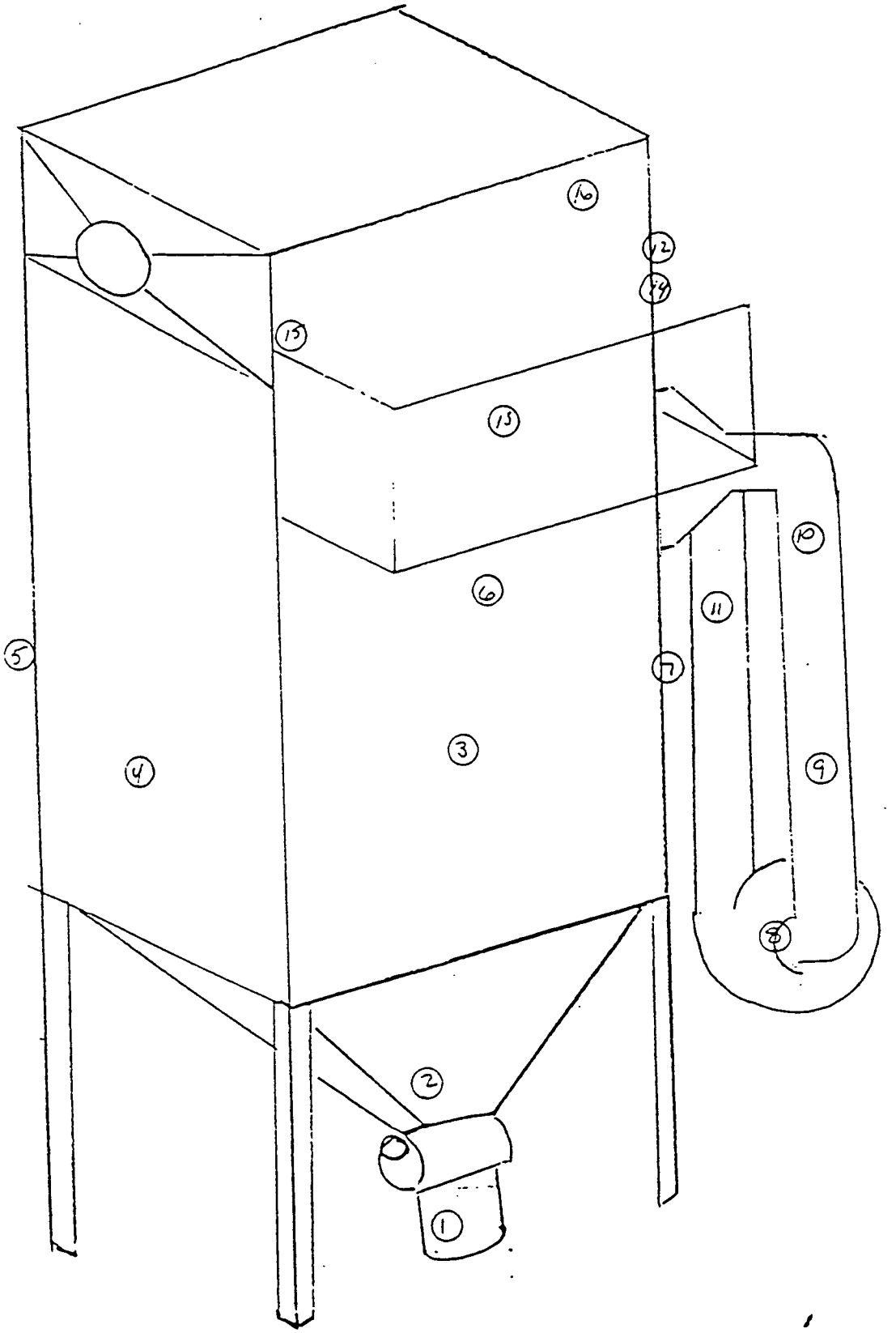

FMPC
OPERATIONS SAFETY & HEALTH - RADIOLOGICAL SAFETY

MAR 4 - 5111

RADIOLOGICAL SURVEY REPORT

Date: 4-26-90	LOCATION: Pt # 8	RST: LWJ / BAH	Page 1 of 2
Time: 1900	LEVEL: 600		

REASON FOR SURVEY: ☐ ROUTINE ☒ SPECIAL REQUEST ☐ RWP ☐ INCIDENT

COMMENTS:
Pre Equipment Removal Survey for Construction. Survey Performed on Calcium Scrubber Tank.
* Survey performed inside a contaminated Area

FOLLOW-UP SURVEY ATTACHED ☐YES ☒NO
SURVEY MAP ATTACHED ☒YES ☐NO

INSTRUMENTS

MODEL	SERIAL NUMBER	CALIBRATION DATE	BKRD.	EFF.
FM-177	59179	7/90	0	10
14-C	44499	9/90	200	10
Tennelec	LB 5100 #4	11/89	.54	.23
			2.74	.45

ANALYZE FOR: ☒ ALPHA ☒ BETA-GAMMA ☐ OTHER

TYPE OF SURVEY: ☒ CONTAMINATION ☒ RADIATION ☐ OTHER

ITEM NUMBER	GRID COORDINATES	DESCRIPTION	CORRECTED DOSE RATE (mRem/hr) γ CONTACT	β/γ CONTACT	γ 3 FT.	β/γ 3 FT.	DPM ALPHA 100 CM²	DPM ALPHA PROBE	DPM BETA-GAMMA 100 CM²	DPM BETA-GAMMA PROBE
1	8A-600-10/D	Metal Box Drain					3612	12,000	18,559	150,0
2		Valve Flange					868	4,000	1,998	150,0
3		Bottom Lip					6,483	6,000	17,642	120,0
4		Front Lip					2,374	10,000	5,363	120,0
5		Front of Scrubber Tank					1,353	50,000	2,432	220,
6		Side of Scrubber Tank					717	30,000	2,391	35,0
7		Side Lip					1,955	22,000	5,148	220,
8		Back of Scrubber Tank					2,170	40,000	5,696	30,0
9		Bearing Mount					5,604	28,000	15,345	120,0
10		Pipe					1,144	100,000	1,158	120,0
11		Pipe					1,386	10,000	2,623	15,0
12		Pipe					1,437	8,000	3,185	50,0
13		Platform					876	15,000	1,459	120,
14		Inside Flange					257	5,000	404	50,
15		Pipe					1,278	37,000	2,801	50,0
16		Top of Tank					1,336	8,000	2,783	100,

NO.	DISTRIBUTION OF COPIES
1	Radiological Safety Technician Supervisor
2	Radiological Safety Engineer
3	Facility Supervisor

NOTIFICATION OF SURVEY RESULTS

SUPERVISOR NOTIFIED	TIME	DATE	NOTIFIED BY	REVIEWED BY	DATE

MAP 4 - 5111

CALCINER SCRUBBER TANK

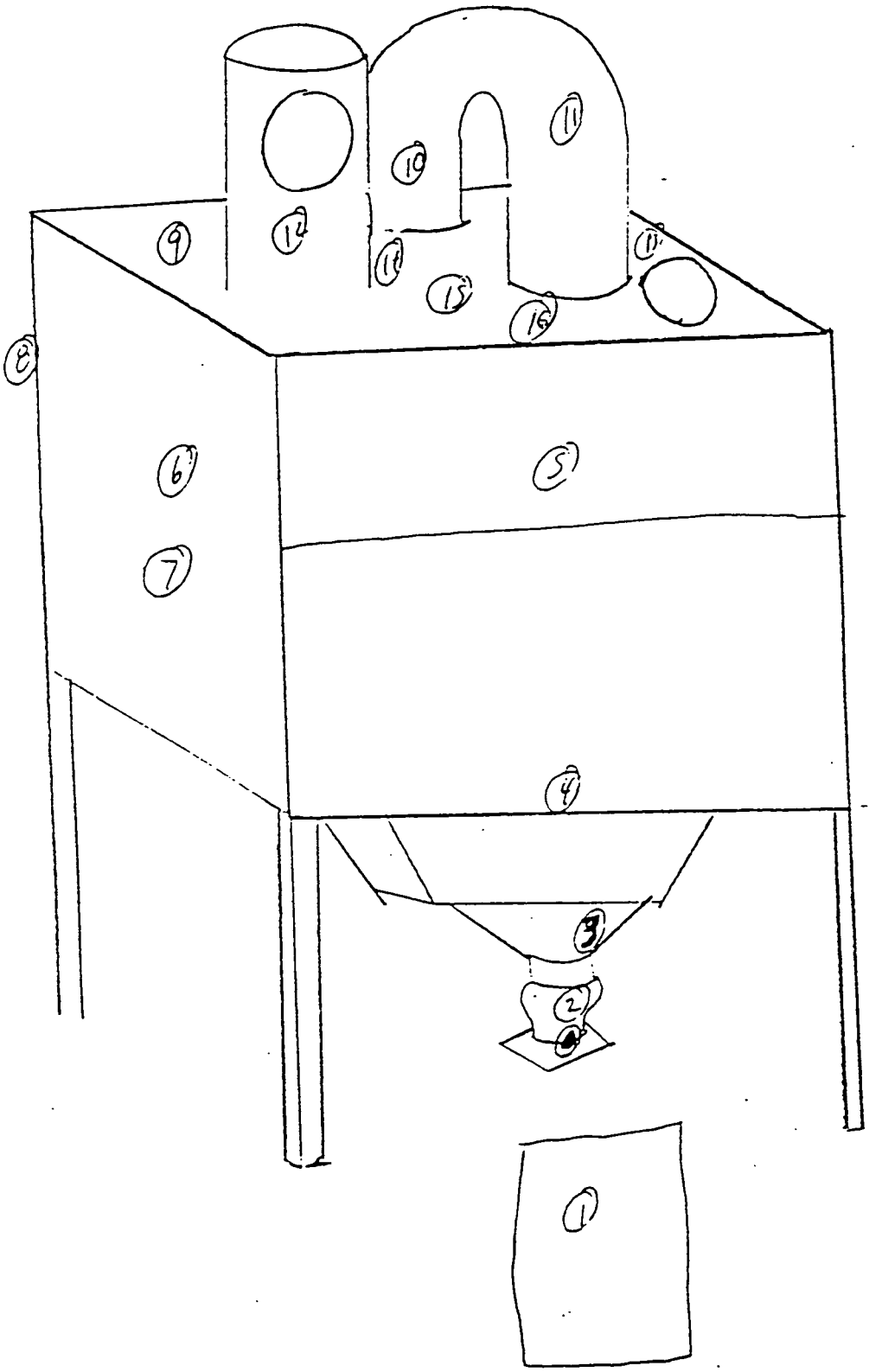

FMPC
OPERATIONS SAFETY & HEALTH - RADIOLOGICAL SAFETY

RADIOLOGICAL SURVEY REPORT

5111

Date: 4-26-90	LOCATION: Pt #8	RST: LWJ/DAH	Page 1 of 2
Time: 1700	LEVEL: 600		

REASON FOR SURVEY: ☐ ROUTINE ☒ SPECIAL REQUEST ☐ RWP ☐ INCIDENT

COMMENTS:
Pre Equipment Removal Survey for Construction. Survey performed on Dust Collector G8-024 (Muffle Dust Collector)
* Survey Performed inside a contaminated Area.

FOLLOW-UP SURVEY ATTACHED ☐YES ☒NO
SURVEY MAP ATTACHED ☒YES ☐NO

INSTRUMENTS

MODEL	SERIAL NUMBER	CALIBRATION DATE	BKRD.	EFF.
FM-177	59179	7/90	0	10
14-C	44499	9/90	200	10
LB5100	#4	11/89 α/3-β	.56/2.74	.239/.4

ANALYZE FOR: ☒ ALPHA ☒ BETA-GAMMA ☐ OTHER

TYPE OF SURVEY: ☒ CONTAMINATION ☒ RADIATION ☐ OTHER

ITEM NUMBER	GRID COORDINATES	DESCRIPTION	CORRECTED DOSE RATE (mRem/hr) γ CONTACT	β/γ CONTACT	γ 3 FT.	β/γ 3 FT.	DPM ALPHA 100 CM²	DPM ALPHA PROBE	DPM BETA-GAMMA 100 CM²	DPM BETA-GAMMA PROBE
1	8A-600-11D	Motor Mount					4073	10,000	17815	500,
2		Motor Wire					3035	10,000	5888	200,
3		Door					324	2,600	500	20,
4		Door Lip					6792	10,000	18,007	600,
5		Front of D.C.					2282	2,000	3789	20,0
6		Lip					5001	12,000	10724	400,
7		Door Lip					6156	16,000	14975	500,
8		Inlet Pipe					1545	10,000	3884	30,
9		Back Lip					8215	4,500	54587	700,
10		Top Lip					1378	10,000	3030	100,
11		Front Lip					1428	14,000	2911	200,
12		Top of D.C.					1353	12,000	3171	100,
13		Side of D.C.					449	3,000	948	400
14		Plate at end of Rail					934	6,000	1391	16,
15		Motor Mount					6683	—	74578	500
16	↓	Side Lip					6625	8,000	75327	100,

NO.	DISTRIBUTION OF COPIES
1	Radiological Safety Technician Supervisor
2	Radiological Safety Engineer
3	Facility Supervisor

NOTIFICATION OF SURVEY RESULTS

SUPERVISOR NOTIFIED	TIME	DATE	NOTIFIED BY	REVIEWED BY	DATE

FMPC-OS&H-1993-1 (REV. 11/4/88)

MUFFLE DUST COLLECTOR

G8-024

5111

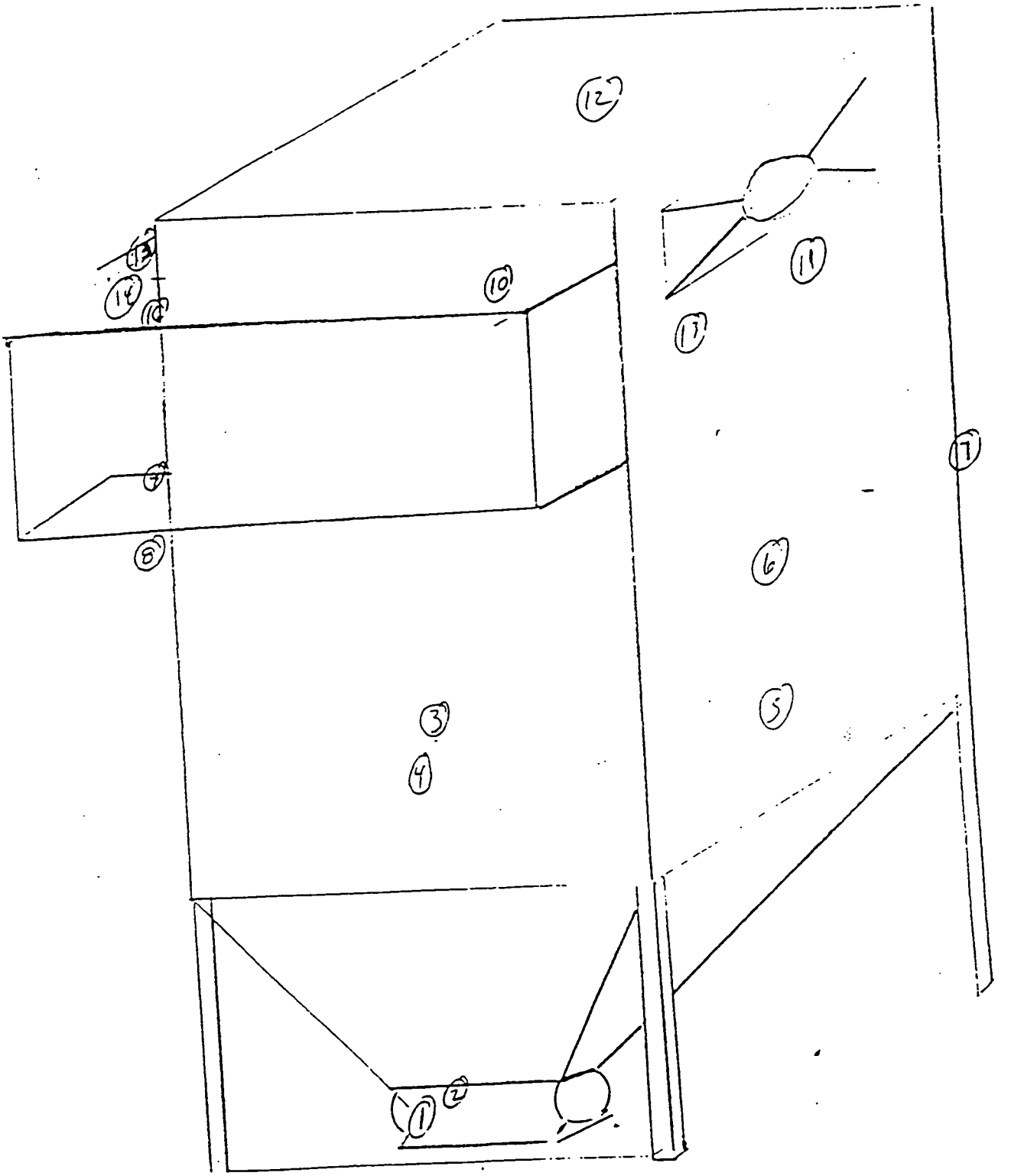

FMPC
OPERATIONS SAFETY & HEALTH - RADIOLOGICAL SAFETY

RADIOLOGICAL SURVEY REPORT

- 5111

:e: 4/27/90	LOCATION: 8A	RST:	Page 1 of 2
ne: 1700	LEVEL: WILLIAMS MILL	WJ	

SON FOR SURVEY: ☒ ROUTINE ☐ SPECIAL REQUEST ☐ RWP ☐ INCIDENT

AMENTS:

SURVEY OF WILLIAMS MILL
IN PREPARATION FOR REMOVAL

INSTRUMENTS

MODEL	SERIAL NUMBER	CALIBRATION DATE		BKRD.	EFF.
LB5100	#4	5/90	α/βγ	.56/2.74	.239/.459
14-C	44499	9/90	βγ	200	10
FM177	59182	7/90	α	0	10

ANALYZE FOR: ☒ ALPHA ☒ BETA-GAMMA ☐ OTHER

TYPE OF SURVEY: ☒ CONTAMINATION ☐ RADIATION ☐ OTHER

OLLOW-UP SURVEY ATTACHED ☐YES ☒NO
URVEY MAP ATTACHED ☒YES ☐NO

ITEM UMBER	GRID COORDINATES	DESCRIPTION	CORRECTED DOSE RATE (mRem/hr) γ CONTACT	β/γ CONTACT	γ 3 FT.	β/γ 3 FT.	DPM ALPHA 100 CM²	DPM ALPHA PROBE	DPM BETA-GAMMA 100 CM²	DPM BETA-GAMMA PROBE
1	8A-580-9B	MILL					642	2,200	1317	100,000
2		INSIDE BELT GAURD					2399	18000	8655	100,000
3		PLATFORM					625	14,000	1057	120,000
4		OUTLET LINE					859	4,000	2724	100,000
5		INLET PIPE					240	<1000	285	80,000
6		SCALE PLATFORM					56	<1000	62	20,000
7		SIDE OF SCALE					131	—	231	13,000
8		SIDE OF SCALE					89	—	144	7,000
9		BLOWER OUTLET PIPE					693	3000	1436	70,000
10		SUPPORT PLATE					432	5000	779	120,000
11		MOTOR IN REAR. BELT GAURD					516	19,000	2167	260,000
12		MILL					550	2000	1154	120,000
13		SIDE OF MILL					416	3500	1126	400,000
14		OUTLET DUCT					374	4800	747	150,000
15		INSIDE BELT GAURD					2332	4000	11359	300,000
16	↓	PIPES JUST UNDER MILL					2006	2500	15760	400,000

NOTIFICATION OF SURVEY RESULTS

SUPERVISOR NOTIFIED	TIME	DATE	NOTIFIED BY	REVIEWED BY	DATE

NO.	DISTRIBUTION OF COPIES
1	Radiological Safety Technician Supervisor
2	Radiological Safety Engineer
3	Facility Supervisor

FMPC-OS&H-1993-1 (REV. 11/4/88)

FMPC

OPERATIONS SAFETY & HEALTH - RADIOLOGICAL SAFETY

RADIOLOGICAL SURVEY REPORT (CONTINUATION SHEET)

ITEM NUMBER	GRID COORDINATES	DESCRIPTION	CORRECTED DOSE RATE (mRem/hr) γ CONTACT	β/γ CONTACT	γ 3 FT.	β/γ 3 FT.	DPM ALPHA 100 CM²	DPM ALPHA PROBE	DPM BETA-GAMMA 100 CM²	DPM BETA-GAMMA PROBE
7	8A-580-98	SUPPORT PLATE IN REAR					918	4000	2779	160,000
8		BELT GAURD					3219	6000	18002	160,000
19		MOTOR MOUNT					2960	36000	6601	300,000
20		TOP OF MOTOR					4424	30,000	10107	400,000
21		TOP OF MOTOR					7370	40,000	17126	600,000
22		PIPE					740	<1000	158	24,000
23		OUTLET DUCT					148	<1000	222	26,000
24		INLET DUCT					81	<1000	107	36,000
25	↓	SIDE OF MILL					73	<1000	16	18,000
26										

FMPC-OS&H-1993-2 (REV. 11/4/88)

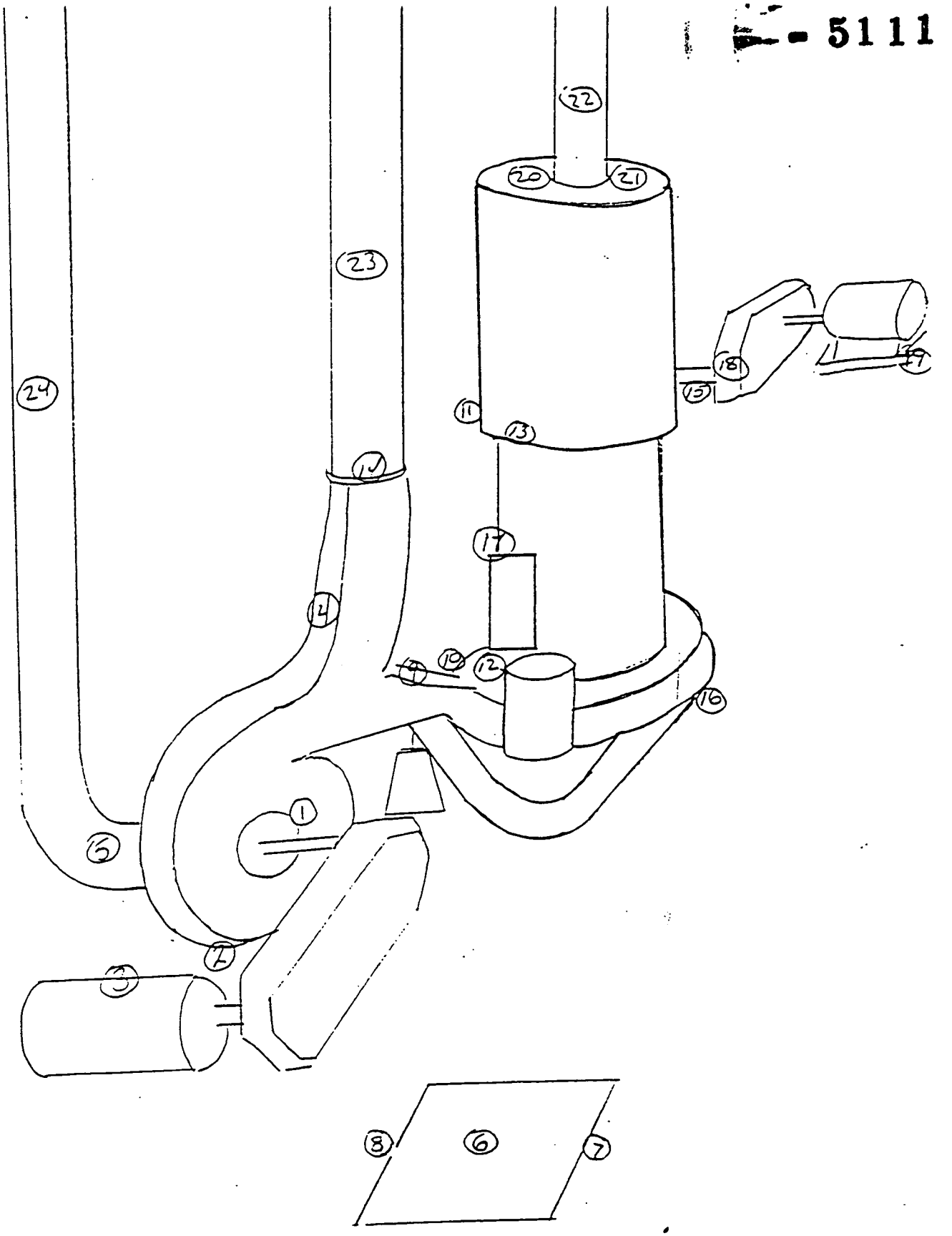
22
20
21
23
24
18
19
15
11
13
14
17
4
10
12
16
1
5
2
3
8
6
7

FMPC
OPERATIONS SAFETY & HEALTH - RADIOLOGICAL SAFETY

RADIOLOGICAL SURVEY REPORT

5111

Date: 4-28-90	LOCATION: Pt # 8	RST: LWJ / BAH	Page 1 of 4
Time: 1000	LEVEL: 580		

REASON FOR SURVEY: ☐ ROUTINE ☒ SPECIAL REQUEST ☐ RWP ☐ INCIDENT

COMMENTS:
Pre Equipment Removal Survey for construction

INSTRUMENTS

MODEL	SERIAL NUMBER	CALIBRATION DATE	BKRD.	EFF.
FM-177	59182	7/90	0	10
14-C	44499	9/90	200	10
Lb 5100	#4	11/89	.34/.274	.239/.43

ANALYZE FOR: ☒ ALPHA ☒ BETA-GAMMA ☐ OTHER

FOLLOW-UP SURVEY ATTACHED ☐YES ☒NO
SURVEY MAP ATTACHED ☒YES ☐NO

TYPE OF SURVEY: ☒ CONTAMINATION ☐ RADIATION ☐ OTHER

ITEM NUMBER	GRID COORDINATES	DESCRIPTION	CORRECTED DOSE RATE (mRem/hr) γ CONTACT	β/γ CONTACT	γ 3 FT.	β/γ 3 FT.	DPM ALPHA 100 CM²	DPM ALPHA PROBE	DPM BETA-GAMMA 100 CM²	DPM BETA-GAMMA PROBE
1	8A-580-11/0	On Top of Duct					206	2,200	377	40,000
2		On Top of Duct					232	1,200	459	26,000
3		On Top of Duct					1177	4,000	4509	22,000
4		On Top of Duct					3587	14,000	14975	100,000
5		On Top of Duct					374	12,000	1071	120,00
6		On Top of Duct					3679	36,000	8706	160,000
7		On Top of Duct					1729	36,000	4445	220,00
8		On Top of Duct					1746	15,000	3066	250,00
9		On Top of Duct					717	14,000	1701	230,00
10		On Top of Duct					2340	18,000	6829	80,00
11		On Top of Duct					3838	25,000	9313	80,00
12		On Top of Duct					9930	35,000	24884	240,00
13		Vertical Duct					1370	8,000	2071	14,000
14		On Top of Duct					7085	35,000	13400	280,00
15		On Top of Duct					5805	10,000	13669	250,00
16		On Top of Duct					4307	12,000	6596	400,00

NO.	DISTRIBUTION OF COPIES
1	Radiological Safety Technician Supervisor
2	Radiological Safety Engineer
3	Facility Supervisor

NOTIFICATION OF SURVEY RESULTS

SUPERVISOR NOTIFIED	TIME	DATE	NOTIFIED BY	REVIEWED BY	DATE

039

FMPC-OS&H-1993-1 (REV. 11/4/88)

FMPC
OPERATIONS SAFETY & HEALTH - RADIOLOGICAL SAFETY

RADIOLOGICAL SURVEY REPORT (CONTINUATION SHEET)

5111

ER	GRID COORDINATES	DESCRIPTION	CORRECTED DOSE RATE (mRem/hr) γ CONTACT	β/γ CONTACT	γ 3 FT.	β/γ 3 FT.	DPM ALPHA 100 CM²	DPM ALPHA PROBE	DPM BETA-GAMMA 100 CM²	DPM BETA-GAMMA PROBE
-	8A-580-11/D	On Top of Duct					1010	120,000	1094	250,000
		Inside Duct					1930	12,000	2642	100,000
		On Top of Duct					717	10,000	1212	100,000
		Boot (Rubber Hose)					1077	10,000	1788	220,000
		U Shaped Holder					365	20,000	509	100,000
		Base of Holder					524	16,000	888	400,000
		On Top of Duct					533	6,000	1222	40,000
		On Top of Duct					717	8,000	943	30,000
		On top of Duct					290	34,000	400	90,000
		Flange on Duct					1043	30,000	2148	120,000
7		On Top of Duct					407	5,000	906	10,000
8		On Top of Duct					491	5,000	719	12,000
9		On Top of Duct					382	1,000	354	8,000
0		On Top of Duct					4248	20,000	10148	120,000
1		On Top of Duct					1077	15,000	3094	12,000
2		On Top of Duct					22	20,000	62	120,000
3		On Top of Duct					11746	70,000	27774	300,000
4		On Top of Duct					10340	100,000	24235	600,000
5		On Top of Duct					4365	50,000	7980	220,000
36		On Top of Duct					2265	10,000	4861	100,000
37		On Top of Duct					365	4,000	477	160,000
38		On Top of Duct					1663	10,000	4176	60000
39		On Top of Duct					1713	20,000	4642	120,000
40		On Top of Duct					449	1,000	902	50,000
41		On Top of Duct					583	10,000	1468	400,000
42		Flange on Duct					474	10,000	943	250,000
43	↓	On Top of Duct					357	10,000	1057	400,000

FMPC
OPERATIONS SAFETY & HEALTH - RADIOLOGICAL SAFETY
RADIOLOGICAL SURVEY REPORT (CONTINUATION SHEET) - 5111

ITEM NUMBER	GRID COORDINATES	DESCRIPTION	CORRECTED DOSE RATE (mRem/hr) γ CONTACT	β/γ CONTACT	γ 3 FT.	β/γ 3 FT.	DPM ALPHA 100 CM²	DPM ALPHA PROBE	DPM BETA-GAMMA 100 CM²	DPM BETA-GAMMA PROBE
44	8A-S80-11/D	On Top of Duct					834	10,000	1733	800,000
45	8A-S80-11/C	Vertical Duct					357	<MDA	482	8,000
46	8A-S80-11/D	On Top of Duct					441	3,000	879	28,000
47	8A-S80-11/D	On Top of Duct					290	7,000	756	130,000
48	8A-S80-11/D	On Top of Duct					432	4,000	760	100,000
49	8A-S80-11/D	On Top of Duct					5713	14,000	12377	400,000
50	8A-S80-11/C	Vertical Duct					357	<MDA	509	8,000
51	8A-S80-11/D	On Top of Duct					600	10,000	1130	80,000
52		On Top of Duct					524	10,000	888	80,000
53		On Top of Duct					566	8,000	797	80,000
54		On Top of Duct					499	8,000	1217	200,000
55		On Top of Duct					675	8,000	1071	240,000
56		On Top of Duct					901	4,000	1642	60,000
57	↓	On Top of Duct					8667	45,000	15523	500,000
58	8A-S80-11/C	On Top of Duct					926	10,000	2162	60,000
59	8A-S80-11/D	On Top of Duct					951	8,000	1920	30,000
60	8A-S80-11/D	On Top of Duct					600	8,000	1089	70,000
61	8A-S80-11/C	On Top of Duct					508	30,000	1199	80,000
62	8A-S80-11/C	On Top of Duct					298	12,000	1564	180,000
63	8A-S80-11/C	On Top of Duct					298	6,000	1317	16,000
64	8A-S80-11/C	Vertical Duct					516	2,000	2185	32,000
65	8A-S80-11/D	Vertical Duct					131	4,000	400	120,000
66	8A-S80-11/D	On Top of Duct					114	4000	222	24,000
67	8A-S80-10/D	On Top of Duct					759	10,000	2159	80,000
68	8A-S80-10/D	On Top of Duct					1018	12,000	2765	130,000
69	8A-S80-11/D	On Top of Duct					357	3,500	660	80,000
70	8A-S80-11/D	On Top of Duct					416	2,500	916	200,000

FMPC-OS&H-1993-2 (REV. 11/4/88)

FMPC
OPERATIONS SAFETY & HEALTH - RADIOLOGICAL SAFETY

RADIOLOGICAL SURVEY REPORT (CONTINUATION SHEET)

ITEM NUMBER	GRID COORDINATES	DESCRIPTION	CORRECTED DOSE RATE (mRem/hr) γ CONTACT	β/γ CONTACT	γ 3 FT.	β/γ 3 FT.	DPM ALPHA 100 CM²	DPM ALPHA PROBE	DPM BETA-GAMMA 100 CM²	DPM BETA-GAMMA PROB
71	8A-580-10/0	On Top of Duct					2558	8,000	2938	40,0
72	8A-580-10/0	On Top of Duct					993	10,000	2053	40,0
73	8A-580-10/0	On Top of Duct					508	12,000	879	15,0
74	8A-580-10/C	On Top of Duct					10273	60,000	27464	120,0
75	8A-580-11/D	Motor Frame					474	12,000	783	60,0
76		Motor Frame					173	5,000	276	35,0
77		Motor Casing					391	4,000	1285	30,0
78		Motor Guard					198	8,000	359	200,0
79		Conveyor					399	14,000	776	330,0
80		Case of Motor Gear Guard					801	40,000	1879	400,0
81		Beam					290	8,000	450	350,0
82	↓	Beam					2308	45,000	5427	200,0
83	8A-580-11/C	Top of Drum Station					245	4,500	1482	200,0
84	8A-580-11/C	Inside Drum Station					10252	100,000	16706	800,0
85	8A-580-11/C	Inside Drum Station					15345	60,000	28386	400,0
86	8A-580-11/D	Platform					516	12,000	532	400,0
87		Ledge on top of Furnace					466	8,000	687	180,0
88		Heating Element					215	10,000	290	100,0
89		Top of Furnace					675	10,000	1299	220,0
90	↓	Top of Furnace					1621	20,000	3993	50,00

LVL 580 (13)

MAP 1

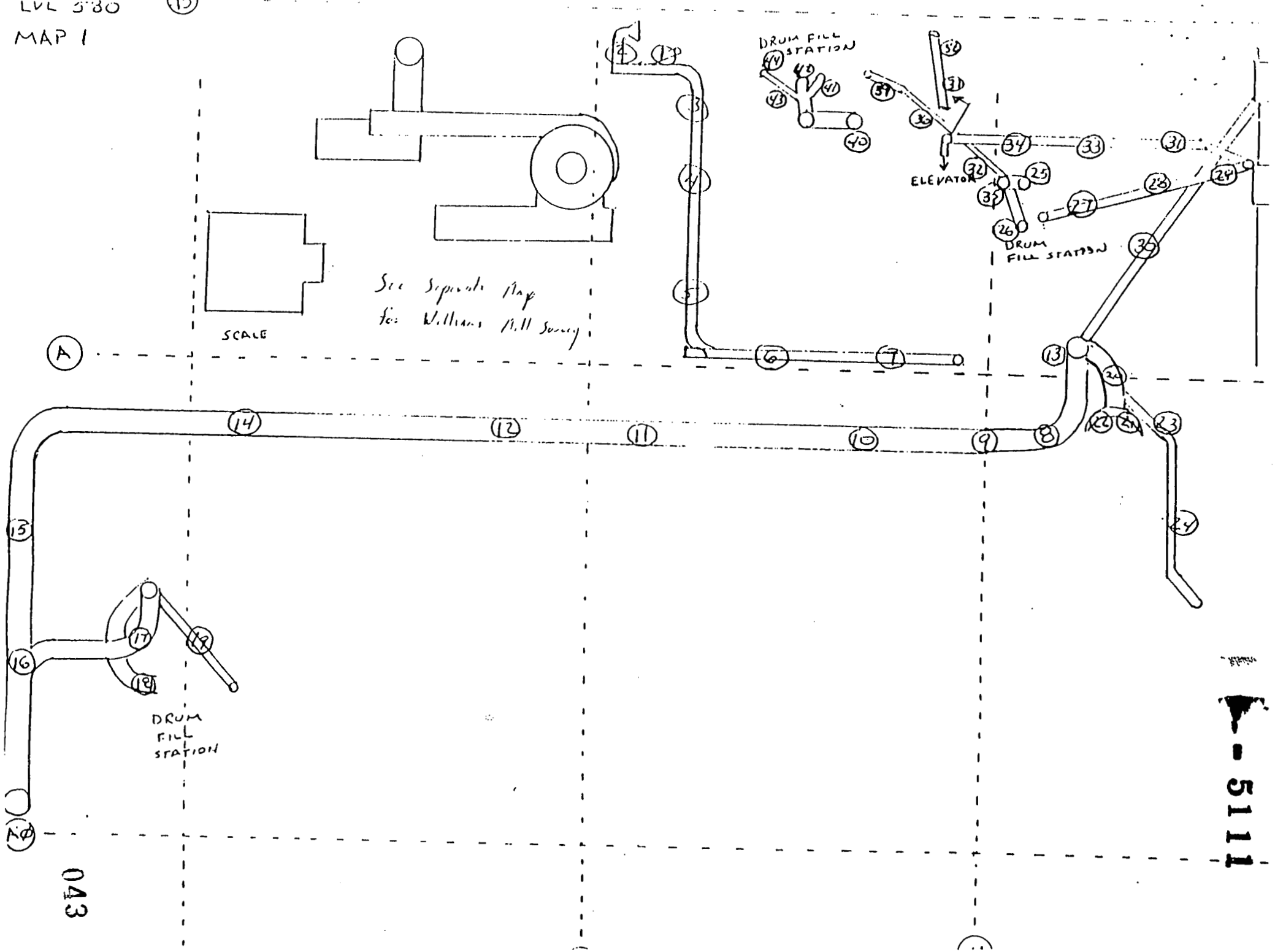

043

5111

LVL 580
MAP 2

A-5111

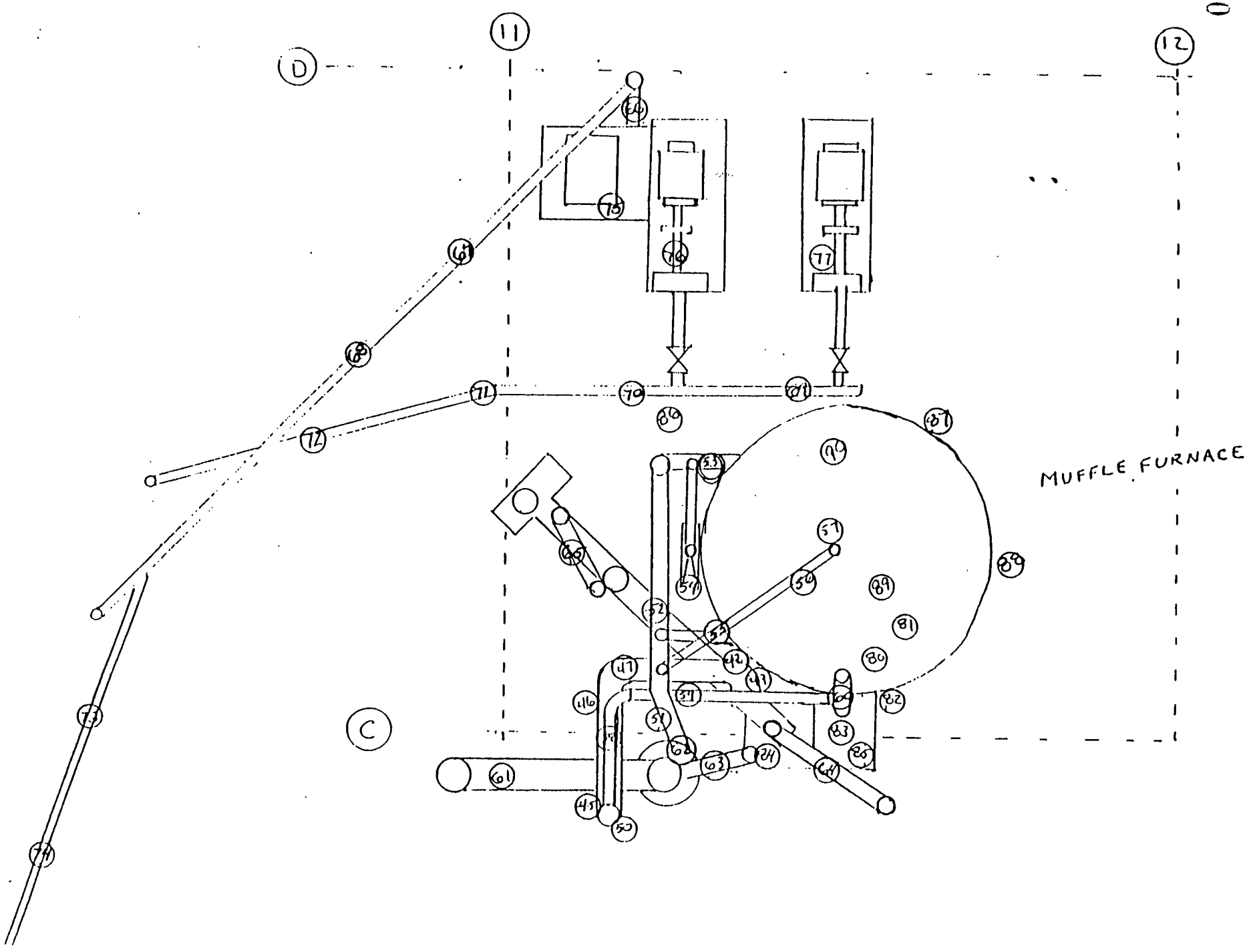

FMPC
OPERATIONS SAFETY & HEALTH - RADIOLOGICAL SAFETY

RADIOLOGICAL SURVEY REPORT

- 5111

Date: 4/22/90	LOCATION: PLANT 8	RST: AFH/LWJ	Page 1 of 8
Time: 0718	LEVEL: (BLDG. 8A) 600'		

REASON FOR SURVEY: ☐ ROUTINE ☒ SPECIAL REQUEST ☐ RWP ☐ INCIDENT

COMMENTS:

G43-27 DUST COLLECTOR SYSTEM ~ PRE-DEMOLITION/CONSTRUCTION SURVEY - 2ND FLOOR, DRY END, LOCATED IN CONTAMINATED AREA: CONTAMINATION LIMITS: >1000 DPM/100cm² ALPHA, >5000 DPM/100cm² BETA-GAMMA

FOLLOW-UP SURVEY ATTACHED ☐YES ☐NO

SURVEY MAP ATTACHED ☒YES ☐NO

INSTRUMENTS

MODEL	SERIAL NUMBER	CALIBRATION DATE	BKRD.	EFF.
14C-4	44505	JAN. 90	150cpm	CF:
LB 5100	4	11/28/89 α	0.54	0.22
		BY	2.74	0.43

ANALYZE FOR: ☒ ALPHA ☒ BETA-GAMMA ☐ OTHER

TYPE OF SURVEY: ☒ CONTAMINATION ☒ RADIATION ☐ OTHER

ITEM NUMBER	GRID COORDINATES	DESCRIPTION	CORRECTED DOSE RATE (mRem/hr) γ CONTACT	B/γ CONTACT	γ 3 FT.	B/γ 3 FT.	DPM ALPHA 100 CM²	DPM ALPHA PROBE	DPM BETA-GAMMA 100 CM²	DPM BETA-GAMMA PROBE
1	MAP 2 8A-600-11B	MOTOR @ BOTTOM OF DUST COLLECTOR					365	20,000	783	24,000
2		SIDE OF DUST COLLECTOR					1177	8,000	2660	7,000
3		SIDE OF DUST COLLECTOR					357	7,000 ~~2,000~~	1,573	4,000
4		SIDE OF DUST COLLECTOR					374	8,000	847	10,000
5		LID AT BOTTOM					374	2,2000	674	60,000
6		SIDE OF PANEL					483	2,2000	998	60,000
7		FRAME OF DUST COLLECTOR					1068	2,2000 ~~[illegible]~~	2482	60,000 ~~[illegible]~~
8		N. FRONT OF DUST COLLECTOR					834	16,000	1765	350,000
9		SIDE OF DUST COLLECTOR					558	4000	1313	160,000
10		SIDE OF DUST COLLECTOR					516	6,000	1007	60,000
11		SIDE OF DUST COLLECTOR					399	6,000	756	60,000
12		LID OF PANEL					340	26,000	792	180,000
13		TOP OF PANEL					1027	25,000	2007	150,000
14		TOP LID					4876	10,000	11,610	20,000
15		TOP LID					3914	10,000	6942	20,000
16	↓	TOP OF OUTLET					642	1,000	1012	90,000

NO.	DISTRIBUTION OF COPIES
1	Radiological Safety Technician Supervisor
2	Radiological Safety Engineer
3	Facility Supervisor

NOTIFICATION OF SURVEY RESULTS

SUPERVISOR NOTIFIED	TIME	DATE	NOTIFIED BY	REVIEWED BY	DATE
					045

FMPC-OS&H-1993-1 (REV. 11/4/88)

FMPC

OPERATIONS SAFETY & HEALTH - RADIOLOGICAL SAFETY

RADIOLOGICAL SURVEY REPORT (CONTINUATION SHEET)

ITEM NUMBER	GRID COORDINATES	DESCRIPTION	CORRECTED DOSE RATE (mRem/hr) γ CONTACT	β/γ CONTACT	γ 3 FT.	β/γ 3 FT.	DPM ALPHA 100 CM²	DPM ALPHA PROBE	DPM BETA-GAMMA 100 CM²	DPM BETA-GAMMA PROB
17	MAP 2 8A-GCO-11B	TOP OF VENT DUCT					332	8,000	664	12,000
18		FACE OF DOOR PANEL					533	22,000	911	60,000
19		TOP OF LIP					449	7,000	1180	12,000
20		TOP OF DUCT					550	4,000	838	60,000
21		BOTTOM LIP					1780	16,000	3190	60,000
22		FRAME OF PANEL					324	20,000	861	60,000
23		TOP LIP					491	8,000	824	12,000
24		PIPE					533	8,000	993	12,000
25		TOP OF PIPE					407	8,000	897	12,000
26		TOP OF LIP					466	9000	870	70,000
27		UPPER PANEL FRAME					491	4,000	765	40,000
28		TOP OF DUCT					491	4,000	1071	40,000
29		TOP OF DUCT					575	6,000	1313	40,000
30		TOP OF DUCT					683	6,000	1144	40,000
31		TOP OF DUCT					441	5,000	815	30,000
32		TOP OF DUCT					466	4,000	906	30,000
33		UPPER LIP OF BOX					324	6,000	569	120,000
34		LIP OF VENT					457	6,000	925	120,000
35		UPPER LIP OF BOX					441	6,000	811	120,000
36		LIP OF VENT					491	6,000	724	120,000
37		FRAME ON PANEL					616	12,000	1066	80,000
38		TOP OF EVACUATION SUCTION					449	12,000	605	80,000
39		TOP OF EVACUATION SUCTION					801	12,000	1865	80,000
40		UPPER LIP OF PANEL					424	7,000	738	80,000
41		FRONT OF PANEL					1370	7,000	2167	70,000
42		UPPER LIP OF PANEL					332	8,000	719	20,000
43	↓	FRONT OF PANEL					140	8,000	231	40,000

FMPC-OS&H-1993-2 (REV. 11/4/88)

FMPC

OPERATIONS SAFETY & HEALTH - RADIOLOGICAL SAFETY

RADIOLOGICAL SURVEY REPORT (CONTINUATION SHEET)

ITEM NUMBER	GRID COORDINATES	DESCRIPTION	CORRECTED DOSE RATE (mRem/hr) γ CONTACT	β/γ CONTACT	γ 3 FT.	β/γ 3 FT.	DPM ALPHA 100 CM²	DPM ALPHA PROBE	DPM BETA-GAMMA 100 CM²	DPM BETA-GAMMA PROBE
44	MAP 2 8A-600-11B	TOP OF CHANNEL					156	7000	272	120,0
45		FRONT OF DUST COLLECTOR					842	7000	1555	100,0
46		FRAME OF WALKWAY					2140	7000	3194	100,0
47		LIP OF PANEL					801	8000	1203	220,0
48		FRONT OF PANEL					~~2140~~ 374	8000	523	2000
49		PLATFORM RAIL					~~801~~ 667	8000	1071	200,0
50		UPPER LIP OF PANEL					~~374~~ 1109	7000	1856	80,0
51		LOWER LIP OF DUST COLLECTOR INLET					~~667~~ 466	7000	706	80,0
52		TOP OF DUCT WORK					658	12,000	929	100,0
53	MAP 1 8A-600-11B	TOP OF DUST COLLECTOR FUNNEL					775	12,000	1162	120,0
54	8A-600-11C	TOP OF PIPE					466	7,000	811	180,0
55	11C	TOP OF PIPE					968	3,000	1728	50,0
56	11C	TOP OF DUST COLLECTOR FUNNEL					541	5000	824	70,00
57	8A-600-11B	TOP OF PIPE					616	2,000	1285	1600
58	12B	TOP OF PIPE					650	2000	1276	1200
59	12B	TOP OF PIPE					616	7000	1094	2000
60	12B	TOP OF PIPE					926	5000	2025	10,000
61	11B	TOP OF DUST COLLECTOR					650	5000	1578	11000
62	11B	TOP OF DUST COLLECTOR					616	5400	1601	14000
63	11B	TOP OF DUST COLLECTOR					633	4600	1372	12000
64	11B	LISTED IN 12C SIDE OF PIPE 20'					391	5000	445	280,0
65	11B	LISTED IN 12C SIDE OF PIPE 14'					1077	28,000	1523	240,00
66	11C	TOP OF PIPE					734	5000	1582	30,000
67	11C	TOP OF PIPE					1194	7,000	2327	76,000
68	11C	TOP OF PIPE					985	5600	2130	18000
69	11B	DUST COLLECTOR SIDE COVER					566	2000	1043	40000
70	11B	DUST COLLECTOR SIDE COVER					734	4800	1267	54000

FMPC

OPERATIONS SAFETY & HEALTH - RADIOLOGICAL SAFETY

RADIOLOGICAL SURVEY REPORT (CONTINUATION SHEET)

ITEM NUMBER	GRID COORDINATES	DESCRIPTION	CORRECTED DOSE RATE (mRem/hr) γ CONTACT	β/γ CONTACT	γ 3 FT.	β/γ 3 FT.	DPM ALPHA 100 CM²	DPM ALPHA PROBE	DPM BETA-GAMMA 100 CM²	DPM BETA-GAMMA PROBE
71	8A-600-11B	TOP OF PIPE					374	3200	733	4[illegible]
72	11B	TOP OF BLOWER MOTOR					407	1200	797	6600
73	11B	TOP OF BLOWER					650	2000	1820	3000
74	11A	TOP OF PIPE					516	2200	1212	5000
75	11B	TOP OF PIPE					290	2400	377	6000
76	11B	TOP OF PIPE					206	1200	222	7000
77	11B	TOP OF DUST COLLECTOR FUNNEL					826	6000	1847	20000
78	11B	TOP OF PIPE					985	5000	1916	20000
79	11B	TOP OF PIPE					658	3000	1226	16000
80	11B	TOP OF PIPE					759	4000	1491	18000
81	11B	BOX FILTER TOP					190	9000	336	10000
82	11B	LISTED 11A SIDE OF PIPE 8' FROM FLOOR					566	20000	938	50000
83	10B	TOP OF PIPE					842	10000	1427	80,000
84	11B	TOP FILTER SEPARATOR					1135	12,000	2742	120,000
85	11B	TOP OF PLATFORM					190	2200	249	110000
86	11B	TOP OF BLOWER					290	2200	601	5000
87	11B	LISTED 12B SIDE OF PIPE 7'					399	3000	628	25,000
88	11B	MOTOR COVER					491	24000	838	180,000
89	11B	TOP OF PIPE					834	2600	1171	80,000
90	11B	TOP OF PIPE					993	5000	1628	200,000
91	11B	MOTOR COVER					851	40,000	1550	60,000
92	11B	MOTOR COVER					1119	6000	1445	60,000
93	11C	TOP OF PIPE					524	4000	696	80,000
94	11C	TOP OF PIPE					600	9500	1331	60,000
95	11C	TOP OF FLANGE					1077	18000	2445	40,000
96	11B	SIDE OF PIPE 8'					441	2000	774	18,000
97	11C	TOP OF PIPE					1997	3000	3865	120,000

FMPC-OS&H-1993-2 (REV. 11/4/88)

FMPC
OPERATIONS SAFETY & HEALTH - RADIOLOGICAL SAFETY

RADIOLOGICAL SURVEY REPORT (CONTINUATION SHEET)

E - 5111

ITEM NUMBER	GRID COORDINATES	DESCRIPTION	CORRECTED DOSE RATE (mRem/hr) γ CONTACT	β/γ CONTACT	γ 3 FT.	β/γ 3 FT.	DPM ALPHA 100 CM²	DPM ALPHA PROBE	DPM BETA-GAMMA 100 CM²	DPM BETA-GAMMA PROB
98	8A-600- 11D	TOP OF PIPE					340	5000	738	18,0
99	11D	DRIVE COVER					1261	6000	3432	11,0
100	11D	TOP OF PIPE					750	7500	2295	8,00
101	11D	TOP OF PIPE					616	1000	998	5,00
102	11D	TOP OF FUNNEL					893	2000	2112	6,00
103	11D	TOP OF INTAKE FILTER					700	1500	1441	22,0
104	11D	TOP OF PIPE					558	5,000	1258	26,0
105	11D	DRIVE COVER					432	5,000	614	35,00
106	11D	TOP OF PIPE					1437	4,500	3642	12,00
107	11D	TOP OF SCRUBBER					1027	5,000	2464	35,00
108	11D	TOP OF FUNNEL					1805	10,000	3130	100,0
109	10D	TOP OF PIPE					1328	16,000	3381	14,00
110	10D	TOP OF PIPE					1654	20,000	3464	6,00
111	10D	TOP OF PIPE					1788	16,000	3797	10,000
112	10D	TOP OF SCRUBBER					357	10,000	601	26,000
113	10D	TOP OF SCRUBBER					1462	10,000	2432	5,000
114	10D	SIDE OF PIPE					1579	8,000	2861	28,00
115	10D	TOP OF COVER					775	44,000	1276	40,00
116	12D	TOP OF PIPE					1194	2,000	3030	8,000
117	12D	TOP OF PIPE					1194	2,000	2048	8,000
118	12D	TOP OF FILTER COVER					642	5,000	1345	50,000
119	12D	TOP OF FILTER COVER					976	5,000	1966	70,000
120	12C	TOP OF PIPE					834	2,000	2057	8,000
121	12C	TOP OF PIPE					859	2,000	1911	8,000
122	12C	TOP OF PIPE					616	2,000	1103	8,000
123	12B	TOP OF PIPE					683	2,000	1153	8,000
124	12B	TOP OF PIPE					876	2,000	1509	8,000

FMPC

OPERATIONS SAFETY & HEALTH - RADIOLOGICAL SAFETY

RADIOLOGICAL SURVEY REPORT (CONTINUATION SHEET) 74 - 2

ITEM NUMBER	GRID COORDINATES	DESCRIPTION	CORRECTED DOSE RATE (mRem/hr) γ CONTACT	β/γ CONTACT	γ 3 FT.	β/γ 3 FT.	DPM ALPHA 100 CM²	DPM ALPHA PROBE	DPM BETA-GAMMA 100 CM²	DPM BETA-GAMMA PROBE
125	8A-600-11B	TOP OF PIPE					1319	2,000	2998	8,00
126	10B	TOP OF PIPE					215	4,000	304	24,0
127	10B	TOP OF PIPE					424	30,000	756	100,0
128		TOP OF PIPE					1068	5,000	2345	40,0
129	10B	TOP OF PIPE					951	5,000	3107	22,0
130	10B	TOP OF PIPE					700	12,000	1454	200,0
131	10B	TOP OF PIPE					683	10,000	1505	10,00
132	10B	TOP OF PIPE					792	10,000	1377	14,00
133	9A	TOP OF PIPE					524	5,000	1194	10,00
134	9A	TOP OF PIPE					424	5,000	774	10,00
135	10A	TOP OF PIPE					424	6,000	820	10,00
136	10A	TOP OF PIPE					616	5,000	1779	10,00
137	10A	TOP OF PIPE					449	8,000	806	12,00
138	11A	TOP OF PIPE					223	8,000	345	18,000
139	11A	TOP OF PIPE					775	5,000	1386	35,000
140	9A	TOP OF PIPE					600	4,000	1185	10,000
141	8A	TOP OF PIPE					667	4,000	1057	8,000
142	8A	TOP OF PIPE					650	5,000	1034	10,000
143	8A	TOP OF PIPE					976	5,000	1683	8,000
144	8A	TOP OF PIPE					792	4,000	1579	8,000
145	10C	SIDE OF PIPE 7'					1043	1,000	1669	5,000
146	11C	SIDE OF PIPE 7'					1169	1,000	1710	5,000
147	11D	SIDE OF PIPE 6'					357	7,000	363	70,000
148	11D	TOP OF PIPE					1018	12,000	1582	120,00
149	11C	TOP OF PIPE					2206	10,000	3806	60,00
150	11D	TOP OF PIPE					943	10,000	2053	50,000
151	8A	TOP OF PIPE					675	10,000	920	80,000

FMPC - 5111

OPERATIONS SAFETY & HEALTH - RADIOLOGICAL SAFETY

RADIOLOGICAL SURVEY REPORT (CONTINUATION SHEET)

ITEM NUMBER	GRID COORDINATES	DESCRIPTION	CORRECTED DOSE RATE (mRem/hr) γ CONTACT	β/γ CONTACT	γ 3 FT.	β/γ 3 FT.	DPM ALPHA 100 CM²	DPM ALPHA PROBE	DPM BETA-GAMMA 100 CM²	DPM BETA-GAMMA PROBE
152	8A-600 - 8A	TOP OF PIPE					2098	10000	2888	40000
153	8A	TOP OF PIPE					1244	6000	2778	10000
154	8A	TOP OF PIPE					826	4000	1427	10000
155	11C	TOP OF PIPE					608	10000	1345	35000
156	10C	TOP OF PIPE					407	12000	715	60000
157	10C	TOP OF PIPE					1855	45000	3770	60000
158	10C	TOP OF PIPE					558	8000	1153	50000
159	9C	TOP OF PIPE					968	6000	1573	40000
160	9B	TOP OF PIPE					1361	50000	2158	38000
161	9B	TOP OF PIPE					801	14000	1614	16000
162	9B	TOP OF PIPE					1227	6000	3953	100000
163	9B	SIDE OF PIPE 12'					876	8000	1331	160000
164	9B	TOP OF PIPE					692	10000	1386	200000
165	11C	TOP OF PIPE					650	10000	1655	120000
166	10C	TOP OF PIPE					859	18000	1856	100000
167	11D	TOP OF PIPE					1629	6000	3436	10000
168	8B	TOP OF PIPE					156	7000	473	28000
169	8B	TOP OF PIPE					420	7000	779	10000
170	8B	TOP OF PIPE					1428	2000	2728	12000
171	8B	TOP OF DRUM FILLING STATION					332	7000	724	40000
172	8B	TOP OF FILLING FLANGE					3135	5000	13463	24000
173	8B	INSIDE SIDE-WEST-DRUM FILLING STATION					7847	25000	20756	50000
174	7B	INSIDE EXHAUST					591	14000	893	80000
175	7B	SIDE OF PIPE 8'					340	2500	491	3200
176	7B	TOP OF BOX FILTER					324	10000	441	70000
177	8B	TOP OF PIPE					575	10000	1121	40000
178	8B	TOP OF PIPE					332	10000	646	30000

FMPC-OS&H-1993-2 (REV. 11/4/88)

FMPC

OPERATIONS SAFETY & HEALTH - RADIOLOGICAL SAFETY — 5111

RADIOLOGICAL SURVEY REPORT (CONTINUATION SHEET)

ITEM NUMBER	GRID COORDINATES	DESCRIPTION	CORRECTED DOSE RATE (mRem/hr)				DPM ALPHA		DPM BETA-GAMMA	
			γ	β/γ	γ	β/γ				
			CONTACT	CONTACT	3 FT.	3 FT.	100 CM²	PROBE	100 CM²	PROBE
179	8A-600-8B	TOP OF PIPE					742	2000	1625	10000
180	9B	TOP OF PIPE					346	3000	573	12000
181	8B	SIDE OF PIPE 20'					1512	2000	2144	10000
182	9B	TOP OF PIPE					165	3000	313	10000

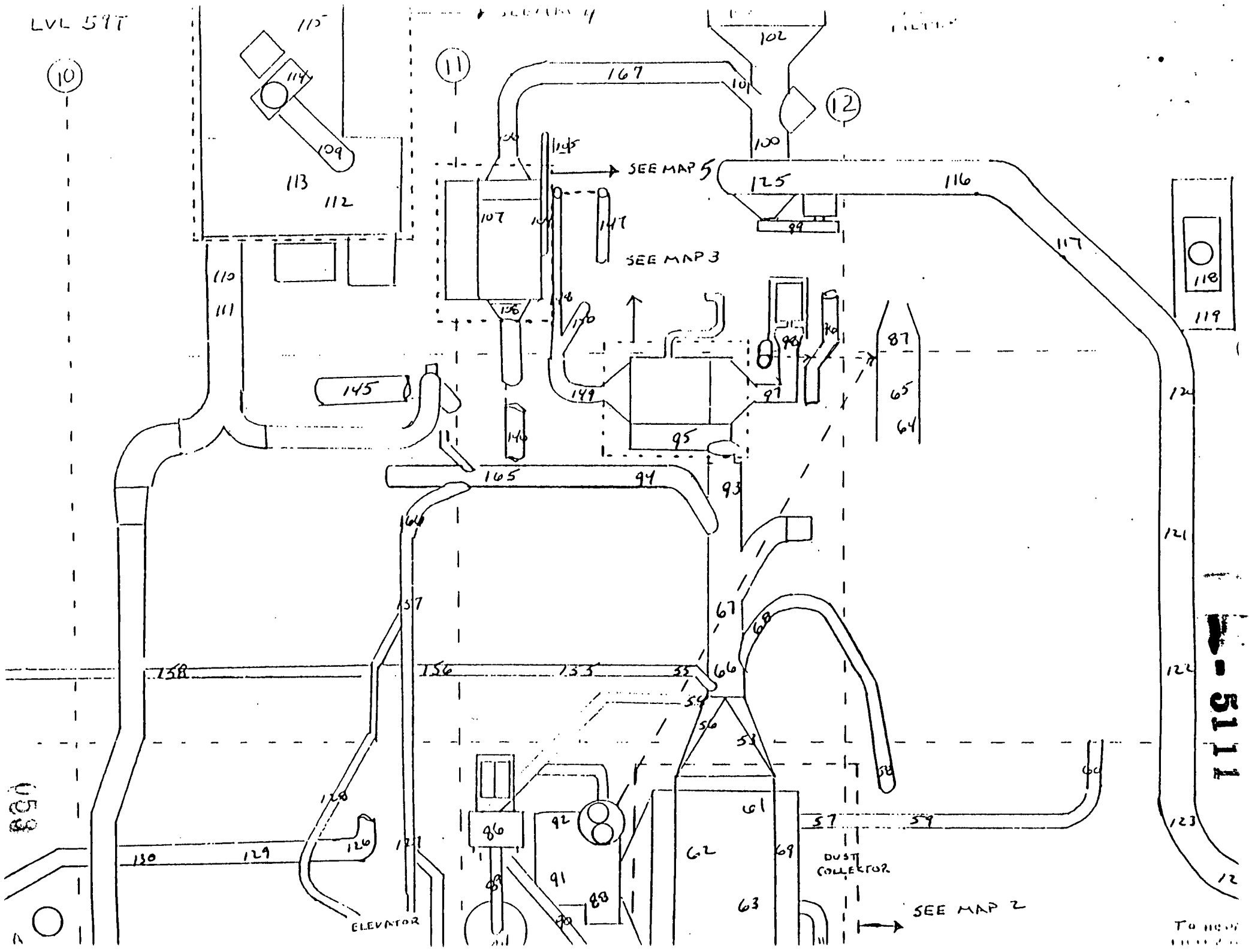
LVL 59T
10
11
12
SEE MAP 5
SEE MAP 3
SEE MAP 2
ELEVATOR
DUST COLLECTOR
5111

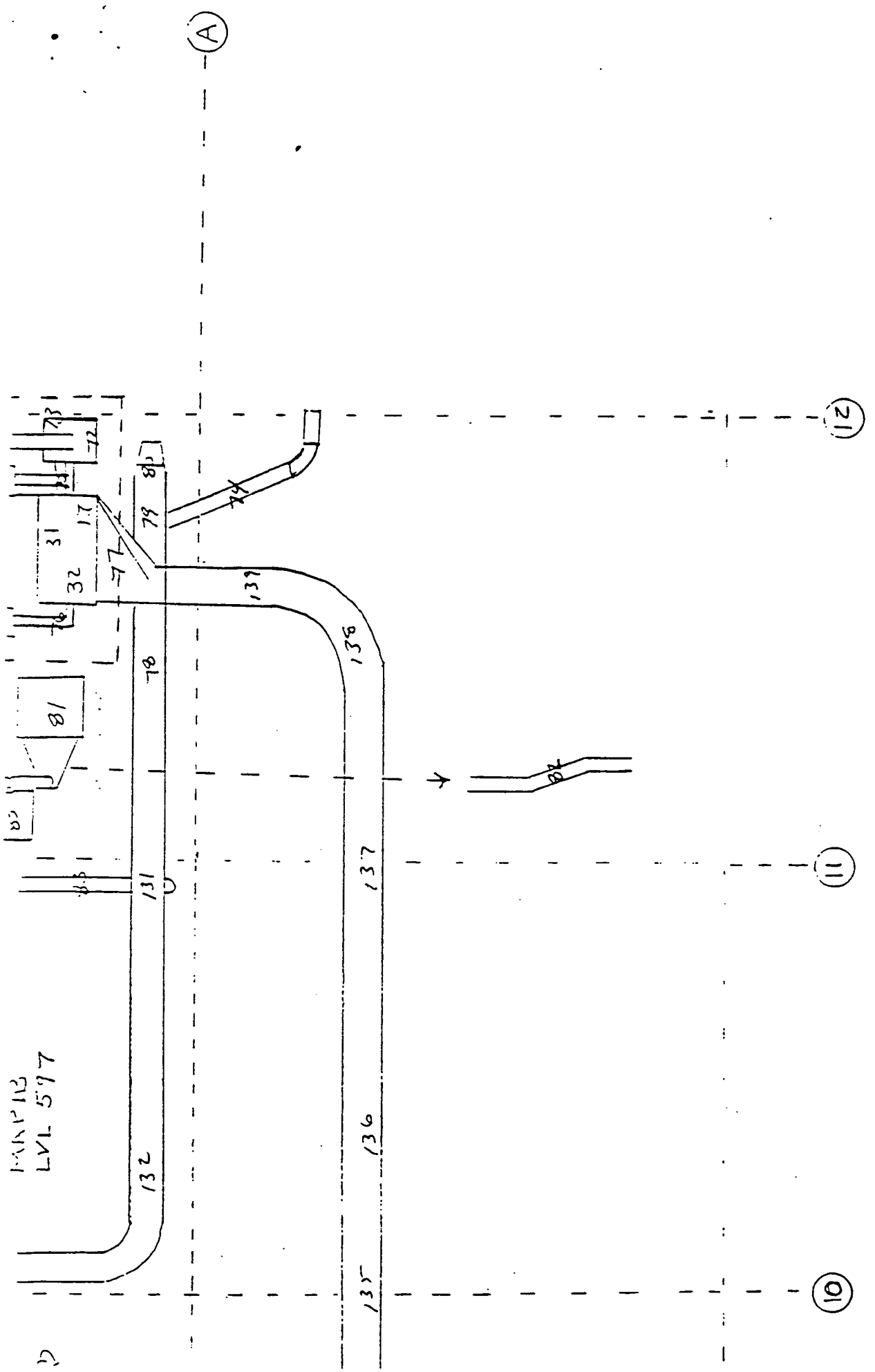
A
12
11
10
LVL 597
132
131
78
81
32
31
77
79
74
139
138
137
136
135

MAP 1C
LVL 597

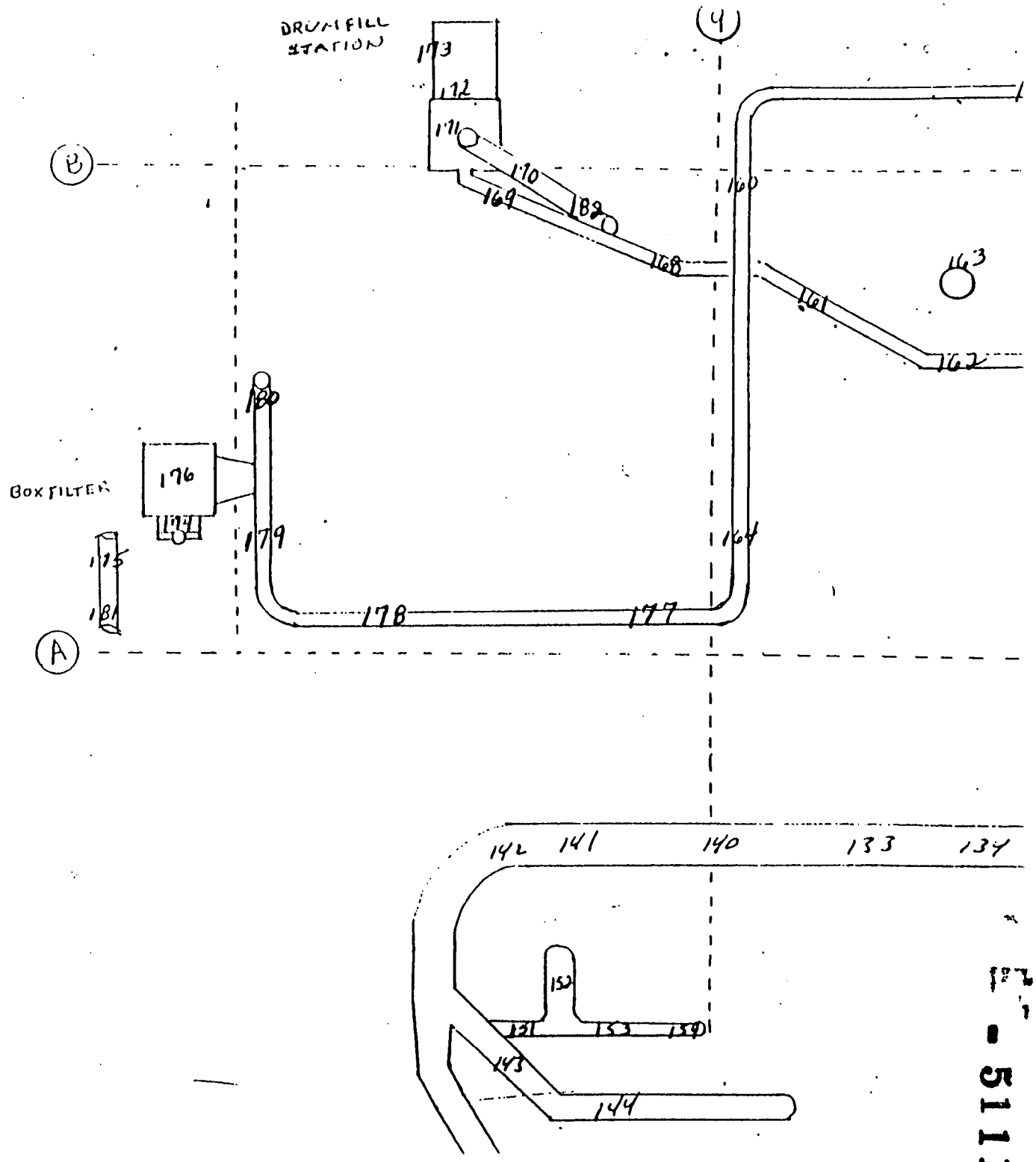

055

5111

5111

N. SIDE

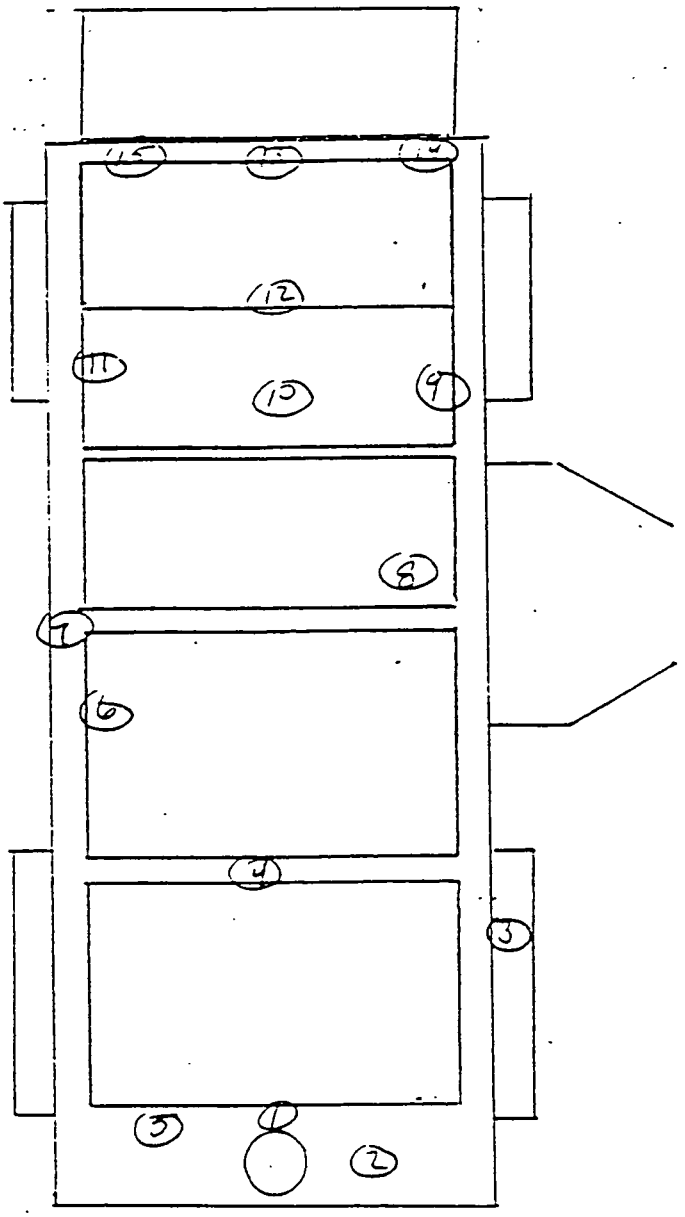

5111

E. SIDE

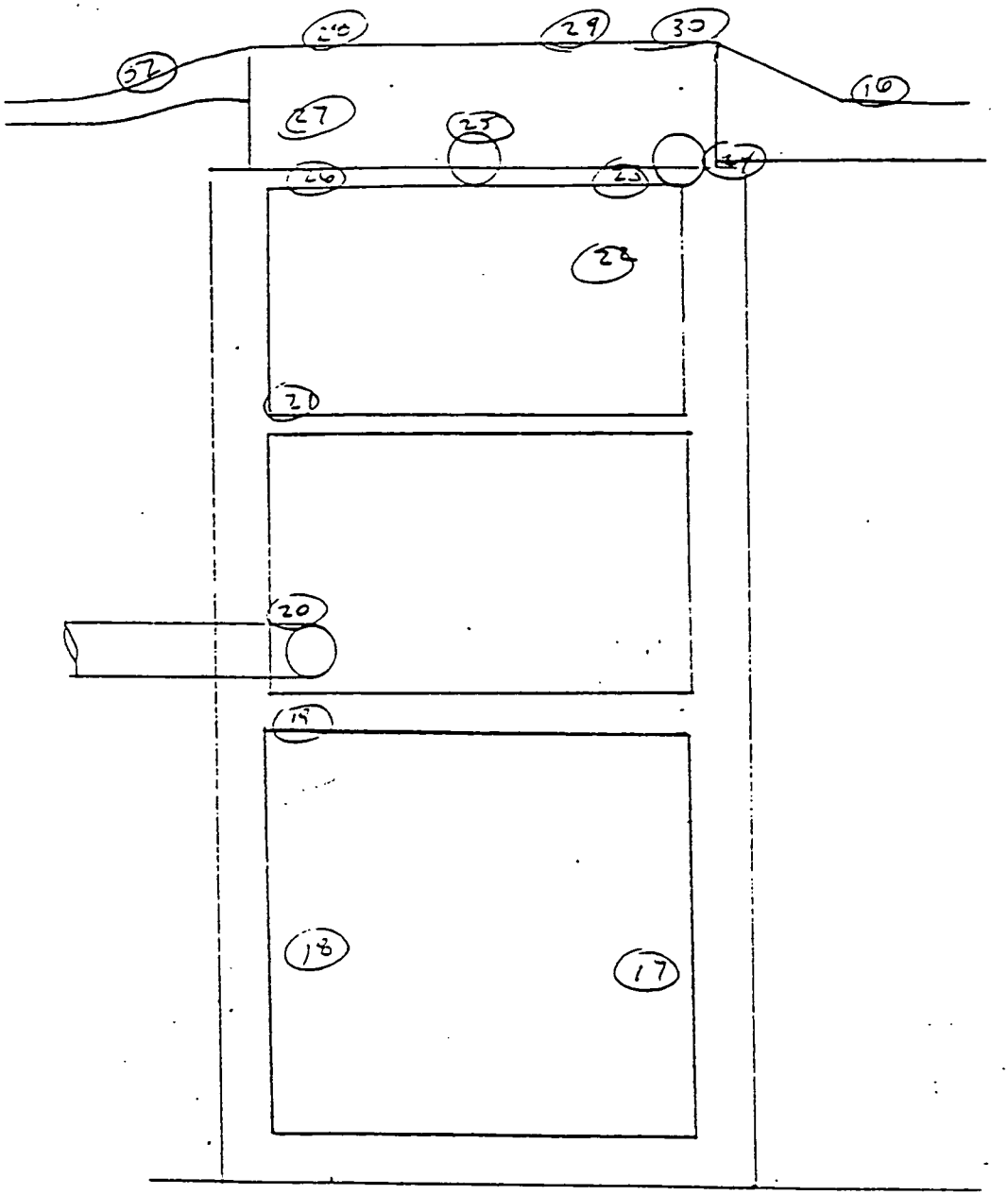

W SIDE

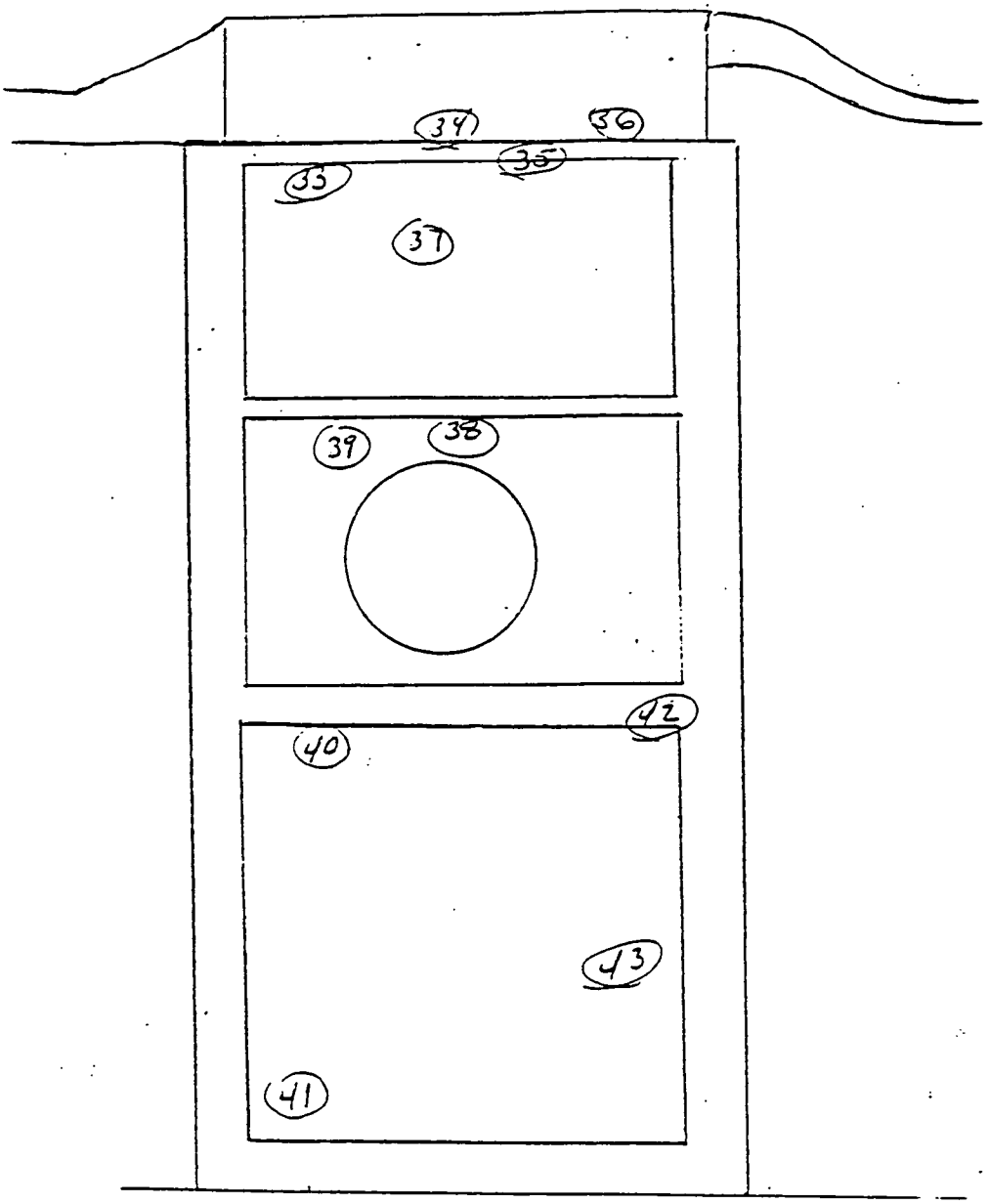

S. SIDE
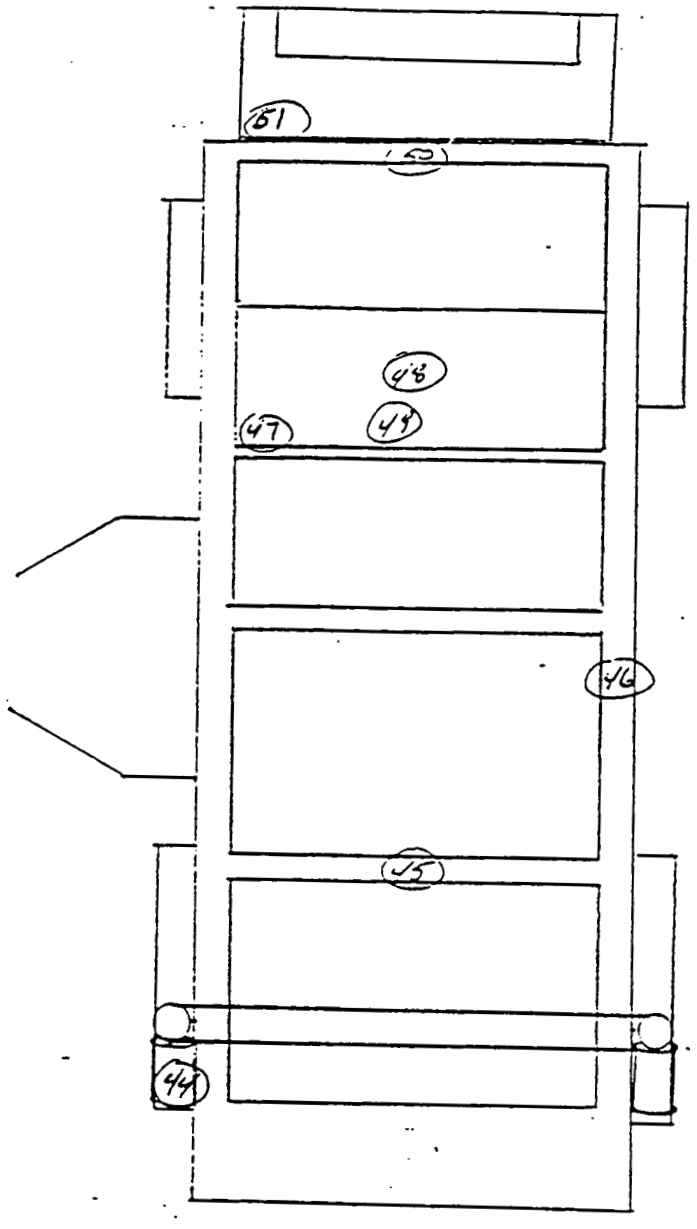
- 5111