U-004-304.11

5174

REMEDIAL INVESTIGATION REPORT FOR OPERABLE UNIT 2 VOLUME 5 OF 6 APPENDICES E & F DRAFT FEBRUARY 1994

02/18/94

DOE-FN/EPA
1319
REPORT
OU2

REMEDIAL INVESTIGATION AND FEASIBILITY STUDY

FERNALD ENVIRONMENTAL MANAGEMENT PROJECT

REMEDIAL INVESTIGATION REPORT OPERABLE UNIT 2

Volume 5 of 6
Appendices E and F
February 1994

U.S. DEPARTMENT OF ENERGY
FERNALD FIELD OFFICE

REMEDIAL INVESTIGATION REPORT FOR OPERABLE UNIT 2

FERNALD ENVIRONMENTAL MANAGEMENT PROJECT
FERNALD, OHIO

REMEDIAL INVESTIGATION AND FEASIBILITY STUDY

VOLUME 5 OF 6
APPENDICES E AND F

FEBRUARY 1994

U.S. DEPARTMENT OF ENERGY
FERNALD FIELD OFFICE

DRAFT

TABLE OF CONTENTS/LIST OF TABLES AND FIGURES
APPENDIX E - INACTIVE FLYASH PILE

Table	Title	Page
E-1A	Inactive Flyash Pile Summary of RI/FS Sample Collection Activities Phase I Field Investigation	E-1-1
E-1B	Inactive Flyash Pile Summary of RI/FS Sample Collection Activities Phase II Field Investigation	E-1-7
E-2A	Inactive Flyash Pile Concentrations of Detected Analytes Above Background in Surface Soil Phase II Field Investigation	E-2-1
E-2B	Inactive Flyash Pile Concentrations of Detected Analytes Above Background in Subsurface Soil Phase I Field Investigation	E-2-5
E-2C	Inactive Flyash Pile Concentrations of Detected Analytes Above Background in Subsurface Soil Phase II Field Investigation	E-2-13
E-2D	Inactive Flyash Pile Concentrations of Detected Analytes Above Background in Surface Water Phase I Field Investigation	E-2-26
E-2E	Inactive Flyash Pile Concentrations of Detected Analytes Above Background in Surface Water Phase II Field Investigation	E-2-29
E-2F	Inactive Flyash Pile Concentrations of Detected Analytes Above Background in Sediment Phase I Field Investigation	E-2-33
E-2G	Inactive Flyash Pile Concentrations of Detected Analytes Above Background in Sediment Phase II Field Investigation	E-2-34
E-2H	Inactive Flyash Pile Concentrations of Detected Analytes Above Background in Groundwater - 1000 Series Phase I Field Investigation	E-2-37
E-2I	Inactive Flyash Pile Concentrations of Detected Analytes Above Background in Groundwater - 1000 Series Phase II Field Investigation	E-2-39
E-2J	Inactive Flyash Pile Concentrations of Detected Analytes Above Background in Groundwater - 2000 Series Phase I Field Investigation	E-2-40
E-2K	Inactive Flyash Pile Concentrations of Detected Analytes Above Background in Groundwater - 2000 Series Phase II Field Investigation	E-2-42
E-2L	Inactive Flyash Pile Contentrations of Detected Analytes Above Background in Groundwater - 3000 and 4000 Series Phase I Field Investigation	E-2-44
E-3A	Inactive Flyash Pile RI/FS Surface Soil Results	E-3-1

TABLE OF CONTENTS
(Continued)

Table	Title	Page
E-3B	Inactive Flyash Pile Tentatively Identified Compounds Surface Soil	E-3-17
E-4	Inactive Flyash Pile CIS Surface Soil Radiological Results	E-4-1
E-5	Inactive Flyash Pile Surface Media Environmental Survey	E-5-1
E-6A	Inactive Flyash Pile RI/FS Subsurface Soil Results	E-6-1
E-6B	Inactive Flyash Pile Tentatively Identified Compounds Subsurface Soil	E-6-82
E-7A	Inactive Flyash Pile Radiological Data CIS Subsurface Soil Results	E-7-1
E-7B	Inactive Flyash Pile CIS Subsurface Soil Results, Non-Radiological Data	E-7-2
E-8	Inactive Flyash Pile Subsurface Media Environmental Survey	E-8-1
E-9	Inactive Flyash Pile RI/FS Sediment Results	E-9-1
E-10	Inactive Flyash Pile CIS On-Site Laboratory Sediment Results	E-10-1
E-11	Inactive Flyash Pile RI/FS Surface Water Results	E-11-1
E-12A	Inactive Flyash Pile RI/FS Groundwater Results	E-12-1
E-12B	Inactive Flyash Pile Tentatively Identified Compounds Water	E-12-47
E-13	Inactive Flyash Pile RI/FS TCLP Samples	E-13-1
E-14	Inactive Flyash Pile RI/FS Quality Control Samples	E-14-1
E-15	Inactive Flyash Pile On-Site Laboratory Screening Results Phase II Field Investigation	E-15-1
E-16A	Inactive Flyash Pile On-site Laboratory Screening Results Activity Concentration of CIS Profile Samples	E-16-1
E-16B	Inactive Flyash Pile CIS Surface Soil On-site Analytical Data	E-16-6
E-16C	Inactive Flyash Pile CIS Fidler Surface Readings	E-16-13
E-16D	Inactive Flyash Pile CIS Exposure Rate Measurements	E-16-23
E-16E	Inactive Flyash Pile CIS Beta Gamma Dose Rate Measurements	E-16-24

TABLE OF CONTENTS
(Continued)

Table	Title	Page
E-17A	Inactive Flyash Pile Geotechnical Analysis Phase I Field Investigation	E-17-1
E-17B	Inactive Flyash Pile Geotechnical Analysis Phase II Field Investigation	E-17-3
E-17C	Inactive Flyash Pile Sieve Analysis ASTM D 422 Phase II Field Investigation	E-17-4
E-17D	Inactive Flyash Pile Hydrometer Analysis ASTM D 422 Phase II Field Investigation	E-17-5
E-18A	Inactive Flyash Pile CIS EM 31 Geophysical Measurements	E-18-1
E-18B	Inactive Flyash Pile CIS EM 34 Geophysical Measurements	E-18-2
E-19	Inactive Flyash Pile Boring Logs	E-19-1
E-20	Monitoring Well Installation Records	E-20-1
E-21A	Inactive Flyash Pile Groundwater Elevation Data, 1988-1992	E-21-1
E-21B	Inactive Flyash Pile Groundwater Elevation Data, 1993	E-21-4

Figure	Title	Page
E-16A	CIS Fidler Measurement Contours	E-16-23
E-16B	CIS Exposure Rate Contours	E-16-24
E-16C	CIS Beta Gamma Dose Rate Contours	E-16-25
E-18A	CIS Geophysical Analysis EM 31 Horizontal Contour Map	E-18-3
E-18B	CIS Geophysical Analysis EM 31 Vertical Contour Map	E-18-4
E-18C	CIS Geophysical Analysis EM 34-3 Horizontal Contour Map	E-18-5
E-18D	CIS Geophysical Analysis EM 34-3 Vertical Contour Map	E-18-6

0 04

KEY TO DATA TABLES

FLTD Filtered Status of the Sample (applies to water samples)

FILT	Filtered sample; filtered status identified on Request for Analysis/Chain of Custody
UNFI	Unfiltered sample; filtered status identified on Request for Analysis/Chain of Custody
*F	Filtered sample; filtered status not identified on Request for Analysis/Chain of Custody; determination based upon other field investigation documentation.
*U	Unfiltered sample; filtered status not identified on Request for Analysis/Chain of Custody; determination based upon other field investigation documentation.
UNKN	Unknown; filtered status could not be determined.

L Analytical Support Level (ASL)

The analytical support level for sample analyses and data validation, defined as follows:

A	*Qualitative Field Analysis* - Analogous to EPA analytical level 1.
B	*Qualitative, Semi-Quantitative, and Quantitative Analyses* - Analogous to EPA analytical level 2.
C	*Quantitative with fully defined QA/QC* - Laboratory analyses generated with full QA/QC checks of types and frequencies specified for ASL D according to FEMP-specified analytical protocols for radiological and nonradiological parameters. The analytical methods are identical to ASL D for QA/QC sample analysis and method performance criteria. However, the data package does not typically contain raw instrument output but does include summaries of QA/QC sample results. Laboratories are required to retain, in the project file, raw instrument data to upgrade ASL C reports to ASL D. Analogous to EPA analytical level 3.
D	*Confirmational with complete QA/QC and reporting* - Provides data generated with a full complement of QA/QC checks of specified types and frequencies according to FEMP-specified analytical protocols for radiological and nonradiological parameters. Analogous to EPA analytical level 4.
E	*Nonstandard* - Analyses by nonstandard protocols that often require method development or validation. Analogous to EPA analytical level 5.
NOTE:	The number 3 is sometimes used to indicate ASL C. Likewise, the numbers 4 and 5 are sometimes used to indicate ASLs D and E, respectively.

VQ Data Validation Qualifier

J	Analyte was analyzed for and positively identified, but the associated numerical value may not be consistent with the amount present in the environmental sample.

0 05

KEY TO DATA TABLES
(continued)

VQ Data Validation Qualifier (continued)

N	Analysis indicates that an analyte is present and there are strong indications that the identity is correct.
R	Data are unusable for any purpose. Analyte was analyzed for, but the presence or absence of the analyte was not verified.
U	Analyte was analyzed for and was not present above the level of the associated value. Associated numerical value indicates the approximate concentration necessary to detect the analyte in the sample.
UJ	This is a combination of the U and J qualifiers. Analyte was analyzed for and was not present above the level of the associated value. The associated value may not accurately or precisely represent the concentration necessary to detect the analyte in the sample.
-	No data validation qualifier assigned.

TABLE E-1A
(Continued)

Location	Sample No.	Date Collected	Radionuclides	Pest/PCB[a]	VOC[b]	SVOC[c]	General Chem.	Metals	EP Toxicity	TCLP[d]
GROUNDWATER SAMPLES (Continued)										
1711	047005	6/11/92	-	-	-	-	-	X	-	-
	047009	6/19/92	-	-	-	-	-	X	-	-
2016	003063	3/28/88	X	X	X	X	X	X	-	-
	003434	8/3/88	X	-	-	-	X	X	-	-
	003685	11/4/88	X	-	-	-	X	X	-	-
	003551	2/7/89	-	X	-	X	-	-	-	-
	003883	2/7/89	X	-	-	-	X	X	-	-
	004152	7/26/89	X	-	-	-	X	X	-	-
	004213	3/4/90	X	-	-	-	X	X	-	-
2047	003998	1/22/89	X	-	-	-	X	X	-	-
	004093	5/2/89	X	-	-	-	X	X	-	-
	004160	7/28/89	X	-	-	-	X	X	-	-
	004220	4/3/90	X	-	-	-	X	X	-	-
2402	038304	1/28/92	X	-	-	-	X	X	-	-
	038339	4/7/92	-	-	-	-	X	X	-	-
3016	003082	4/8/88	X	-	-	-	X	X	-	-
	003435	8/3/88	X	-	-	-	X	X	-	-
	003686	11/4/88	X	-	-	-	X	X	-	-
	003882	2/7/89	X	-	-	-	X	X	-	-
	004241	3/4/90	X	-	-	-	X	X	-	-
3402	038346	4/9/92	-	-	-	-	X	X	-	-
	038384	6/10/92	-	-	-	-	X	X	-	-
4016	004090	5/1/89	X	-	-	-	X	X	-	-
	066867	12/12/89	X	-	-	-	-	-	-	-

See footnotes at end of table

TABLE E-1A

INACTIVE FLYASH PILE
SUMMARY OF RI/FS SAMPLE COLLECTION ACTIVITIES
PHASE I FIELD INVESTIGATION
OPERABLE UNIT 2 REMEDIAL INVESTIGATION
FERNALD ENVIRONMENTAL MANAGEMENT PROJECT

Location	Sample No.	Date Collected	Radionuclides	Pest/PCB[a]	VOC[b]	SVOC[c]	General Chem.	Metals	EP Toxicity	TCLP[d]
SURFACE WATER SAMPLES										
ASIT-009	001174	3/30/89	Total Uranium, Gross Alpha/Beta, Radium-226, Radium-228 only	-[e]	-	-	-	-	-	-
	001175			-	-	-	X[f]	X	-	-
W-11	001107	1/12/89	X	X	-	X	X	-	-	-
	001208	5/14/89	X	-	-	-	-	-	-	-
	001209	5/14/89	X	-	-	-	X	X	-	-
	001247	7/15/90	X	-	-	-	X	X	-	-
	001248	7/15/90	X	-	-	-	-	-	-	-
GROUNDWATER SAMPLES										
1016	003062	3/28/88	X	X	X	X	X	X	-	-
	003906	2/26/89	X	-	-	-	X	X	-	-
	004060	3/29/89	-	X	-	X	-	-	-	-
	066819	12/13/89	X	-	-	-	-	-	-	-
1047	003102	4/20/88	X	-	-	-	-	X	-	-
	003369	7/24/88	X	-	-	-	-	-	-	-
	003648	10/23/88	X	-	-	-	-	-	-	-
	003855	1/22/89	X	-	-	-	X	X	-	-
	066830	12/12/89	X	-	-	-	-	-	-	-

See footnotes at end of table

TABLE E-1A
(Continued)

Location	Sample No.	Sample Interval (ft)[g]	Radionuclides	Pest/PCB[a]	VOC[b]	SVOC[c]	General Chem.	Metals	EP Toxicity	TCLP[d]
SEDIMENT SAMPLES										
ASIT-008	009048	0.0-0.5	Total Uranium, Gross Alpha/Beta, Radium-226, Radium-228 only	-	-	-	-	-	-	-
ASIT-009	009049	0.0-0.5	Total Uranium, Gross Alpha/Beta, Radium-226, Radium-228 only	-	-	-	-	-	-	-
W-11	009037	0.0-0.5	Total Uranium, Gross Alpha/Beta, Radium-226, Radium-228 only	-	-	-	-	-	-	-
	009103	0.0-0.5	Total Uranium, Radium-226, Radium-228 only	-	-	-	-	-	-	-
	009145	0.0-0.5	-	X	X	X	-	X	-	-
	009155	0.0-0.5	Total Uranium, Gross Alpha/Beta, Radium-226, Radium-228 only	-	-	-	-	-	-	-
SURFACE SAMPLES										
N478000 E1379000	005017	0.0-2.0	X	-	-	-	-	-	-	-
SUBSURFACE SAMPLES										
1016	007233	1.5-3.0	X	-	-	-	-	-	-	-
1047	007301	9.0-10.5	X	-	-	-	-	-	-	-
1708	067095	6.0-7.5	X	-	-	-	-	-	-	-
	067096	7.5-9.0	-	X	X	X		X	-	-
	067099	12.0-13.5	-	-	-	-	-	-	-	X
	067101	15.0-16.5	X	-	-	-	-	-	-	-
	067102	16.5-18.0	-	X	X	X	-	X	-	-
	067111	30.0-31.5	X	-	-	-	-	-	-	-
	067112	31.5-33.0	-	X	X	X	-	X	-	-

See footnotes at end of table

FER\CRU2RI\JLG\TABE-1A\February 5, 1994 10:34am

5174

TABLE E-1A
(Continued)

Location	Sample No.	Sample Interval (ft)[g]	Radionuclides	Pest/PCB[a]	VOC[b]	SVOC[c]	General Chem.	Metals	EP Toxicity	TCLP[d]
SUBSURFACE SAMPLES (Continued)										
1708 (Continued)	067115	composite	-	-	-	-	-	-	-	X
	067118	composite	-	-	-	-	-	-	-	metals only
1709	067062	4.5-6.0	X	-	-	-	-	-	-	-
	067064	7.5-9.0	-	X	X	X	-	X	-	-
	067065	9.0-10.5	-	-	-	-	-	-	-	X
	067071	13.5-15.0	-	X	X	X	-	X	-	-
	067072	15.0-16.5	X	-	-	-	-	-	-	-
	067081	28.5-30.0	X	-	-	-	-	-	-	-
1710	067028	3.0-4.5	X	-	-	-	-	-	-	-
	067029	4.5-5.0	-	X	X	X	-	X	-	-
	067032	9.0-10.5	-	X	X	X	-	X	-	-
	067038	16.5-18.0	-	-	-	-	-	-	-	X
	067039	16.5-18.0	-	-	-	-	-	-	X	-
	067043	22.5-23.0	X	-	-	-	-	-	-	-
	067046	27.0-28.5	X	-	-	-	-	-	-	-
	067047	28.5-30.0	-	X	X	X	-	X	-	-
	067051	composite	-	-	-	-	-	-	-	X
1711	067010	1.5-3.0	X	-	-	-	-	-	-	-
	067012	4.5-6.0	-	X	X	X	-	X	-	-
	067014	7.5-9.0	X	-	-	-	-	-	-	-
	067015	9.0-10.5	-	X	X	X	-	X	-	-

See footnotes at end of table

TABLE E-1A
(Continued)

Location	Sample No.	Sample Interval (ft)[g]	Radionuclides	Pest/PCB[a]	VOC[b]	SVOC[c]	General Chem.	Metals	EP Toxicity	TCLP[d]
SUBSURFACE SAMPLES (Continued)										
1711 (Continued)	067016	10.5-12.0	-	-	-	-	-	-	-	X
	067017	10.5-12.0	-	-	-	-	-	-	X	-
	067019	13.5-15.0	X	-	-	-	-	-	-	-
	067020	18.0-19.5	-	X	X	X	-	X	-	-
	067021	composite	-	-	-	-	-	-	-	X
1791	067121	27.0-28.5	X	-	-	-	-	-	-	-
	067122	28.5-30.0	-	X	X	X	-	X	-	-
	067124	composite	-	-	-	-	-	-	-	X
	067125	composite	-	-	-	-	-	-	-	X
1849	067604	6.0-7.5	-	-	X	X	TOC[h] only	-	-	-
	067609	13.5-15.0	-	-	X	X	TOC only	-	-	-
	067618	28.5-30.0	X	-	-	-	TOC only	-	-	-
1850	067627	6.0-7.5	-	-	X	X	TOC only	-	-	-
	067632	13.5-15.0	-	-	X	X	TOC only	-	-	-
	067633	15.0-16.5	-	-	-	-	TOC only	-	-	-
2047	008960	25.0-26.5	X	-	-	-	-	-	-	-
2401	038486	0.0-65.0	Total Uranium and Total Thorium only	-	-	-	-	-	-	-
4016	010441	50.0-51.5	X	-	-	-	-	-	-	-
	010450	95.0-96.5	X	-	-	-	-	-	-	-
	010454	115.0-116.5	X	-	-	-	-	-	-	-

See footnotes at end of table

FER\CRU2RI\JLG\TABE-1A\February 5, 1994 10:34am

0 11

TABLE E-1A
(Continued)

[a]Pest/PCB = Pesticide/Polychlorinated Biphenyl

[b]VOC = Volatile Organic Compound

[c]SVOC = Semivolatile Organic Compound

[d]TCLP = Toxicity Characteristic Leaching Procedure

[e]Sample not analyzed for this parameter

[f]X = Sample analyzed for parameter indicated

[g]The sample interval is depth, in feet, below the ground surface.

[h]TOC = Total Organic Carbon

TABLE E-1B

INACTIVE FLYASH PILE
SUMMARY OF RI/FS SAMPLE COLLECTION ACTIVITIES
PHASE II FIELD INVESTIGATION
OPERABLE UNIT 2 REMEDIAL INVESTIGATION
FERNALD ENVIRONMENTAL MANAGEMENT PROJECT

Monitoring Well, Hydropunch™, or Sample Location	Sample Numbers	Target Analyte List 20.03.05	
		Total Uranium Screening A	Full HSL, Gen. GW Qual., Full Rad. B
SURFACE WATER SAMPLES			
IFP-SW-01		X	X
IFP-SW-02	111828		X
	111829	X	
	112022[b]		X
	112024[b]	X	
IFP-SW-03	111819		X
	111824	X	
	112026[b]	X	
	112027[b]		X
IFP-SW-04	111820		X
	111822	X	
	112015[b]		X
	112019[b]	X	
IFP-SW-05	112029	X	
IFP-SW-06	112030	X	
	112031	X	
IFP-SW-07	112032	X	
IFP-SW-08	112033	X	
IFP-SW-09	112034	X	
IFP-SW-10	113491	X	
IFP-SW-11	116459	X	
IFP-SW-12	116460	X	
GROUNDWATER SAMPLES			
1016		X	X
1047	110892		X
	110893	X	
1711		X	X
1954	Moved to South Field		

See footnotes at end of table

0 13

TABLE E-1B
(Continued)

Monitoring Well, Hydropunch™, or Sample Location	Sample Numbers	Target Analyte List 20.03.05	
		Total Uranium Screening A	Full HSL, Gen. GW Qual., Full Rad. B
GROUNDWATER SAMPLES (Continued)			
1999	111922	X	
2016	111996		X
	112007	X	
2047	110894		X
	110895	X	
2402	116225		X
	116226[b]		X[d]
	116227	X	
	116228[b]	X	
2955	113801		X
	113803	X	
11000	111759	X	
11001	111690	X	
11002	116461	X	
11003	111840	X	
11004	111855	X	
11005		X	
11006		X	
11007	110679	X	
11008			
11047[b]	116318	X	
11048[b]	116351	X	
11049[b]	116356	X	
11050[b]	116454	X	
11051[b]	116437	X	

See footnotes at end of table

TABLE E-1B
(Continued)

Sample Location	Sample Number	Sample Interval (ft.)	Target Analyte List 20.03.05						
			Screening	Chem/Rad	RCRA/Geotechnical				
			A	C	D	E	F	I	J
SEDIMENT SAMPLES									
IFP-SD-01		0 - 0.5		X			X		
IFP-SD-02	111812	0 - 0.5		X					X
	111823				SA,HA				
	111830				TOC				
	112021[b]			X					
IFP-SD-03	111813	0 - 0.5		X[c]					
	116219			X					
IFP-SD-04	111815	0 - 0.5		X[c]					
	112017			X					
SURFACE SAMPLES									
IFP-SS-01	111790	0 - 0.5		X					
IFP-SS-02	111791	0 - 0.5		X					
IFP-SS-03	111792	0 - 0.5		X					
IFP-SS-04	111793	0 - 0.5		X					
IFP-SS-05	111794	0 - 0.5		X					X
	111826				SA,HA,W				
IFP-SS-06	111795	0 - 0.5		X					
IFP-SS-07	111796	0 - 0.5		X					
SUBSURFACE SAMPLES									
1954	Moved to South Field								
1994		0.5 - 2.0			X				
	116264	2.0 - 3.5		X	SA				X
	116265[a]	3.5 - 4.0	X						
		4.0 - 6.0		X	SA			X	
	116277[a]	11.5 - 12.0	X						
		12.0 - 14.0		X	X				
	116283	14.0 - 15.5		X					X
	116284[b]	15.5 - 16.0	X						
	116293[a]	21.5 - 22.0	X						
	116295[b]	22.0 - 23.5						X	
	116301[a]	26.0 - 27.5		X					
	116302[b]	27.5 - 28.0	X						
	116304[b]	28.0 - 30.0							X

See footnotes at end of table

0 15

TABLE E-1B
(Continued)

Sample Location	Sample Number	Sample Interval (ft.)	Target Analyte List 20.03.05						
			Screening	Chem/Rad	RCRA/Geotechnical				
			A	C	D	E	F	I	J
SUBSURFACE SAMPLES (Continued)									
1994 (continued)	116308[b]	32.0 - 34.0			TOC				
	116309[b]				X[g]				
	116312[b]	36.0 - 37.5		X					
	116313[b]	37.5 - 38.0	X						
	116314[b]	37.5 - 38.0	X						
1995		0.5 - 2.0	X		X				
	116080[a]	2.0 - 3.5		X					
	116089[a]	3.0 - 5.0							X
	116081[b]	3.5 - 4.0	X						
	116090[b]	8.0 - 9.0		X					
	116392[b]			X[m]					
	116091[b]	9.0 - 9.5	X						
	116094	11.0 - 11.5	X	X	SA			X	
	116103	17.0 - 17.5	X	X	X				
	116114[b]	24.0 - 25.5						X	
	116115[b]	25.5 - 26.0	X						
	116118	27.5 - 28.0	X	X	X				
	116172	30.0 - 31.5		X			X		X
	116173[b]	31.5 - 32.0	X						
1996		0.5 - 2.0	X	X	X				
	112073	2.0 - 4.0		X[d]					X
		4.0 - 6.0	X	X	SA			X	
	112077[b]	8.0 - 9.5		X					
	112079[b]	9.5 - 10.0	X						
	112080[b]	10.0 - 12.0							X
	112081[b]	12.0 - 13.0						X	
	112082[b]	13.0 - 13.5		X[d]					
	112084[b]	14.0 - 15.0		X[c]					
	112086[b]	15.0 - 15.5	X						
	112087[b]	16.0 - 16.5		X[k]					
	116070	20.0 - 21.5		X					X
	116072	21.5 - 22.0	X						

See footnotes at end of table

TABLE E-1B
(Continued)

Sample Location	Sample Number	Sample Interval (ft.)	Target Analyte List 20.03.05						
			Screening	Chem/Rad	RCRA/Geotechnical				
			A	C	D	E	F	I	J
SUBSURFACE SAMPLES (Continued)									
1997	116177	0.0 - 1.5		X	X				
	116178	1.5 - 2.0	X						
	116184	5.5 - 6.0	X						X
		6.0 - 8.0	X	X	SA			X	
	116192	10.0 - 11.5		X	X				
	116193	11.5 - 12.0	X						
		12.0 14.0							X
	116199	15.5 - 16.0	X	X					
	116216[b]	26.0 - 27.5						X	
	116241[b]	28.0 - 28.5	X						
	116243[b]	28.5 - 30.0		X					
	116244[b]	30.0 - 30.5	X						
	116249[b]	32.0 - 34.0							X
	116252[b]	34.0 - 35.5		X					
	116253[b]	35.5 - 36.0	X						
	116255[b]	36.0 - 38.0			X[g]				
	116256[b]				TOC				
	116257[b]	38.0 - 39.0		X					
	116258[b]	39.0 - 39.5	X						
1998	112040	0.0 - 2.0			X[g]				
	116073	0.0 - 1.5			TOC				
	116075[b]	0.0 - 1.5						X	
	112044	1.5 - 2.0	X						
	112041	2.0 - 4.0							X
	112045[a]	2.0 - 3.5		X					
	116074[b]	2.0 - 3.5						X	
	112053[b]	7.5 - 8.0	X						
	112054[b]	8.0 - 9.5		X					
	112057	10.0 - 11.5		X	SA			X	
	112059	11.5 - 12.0	X						
	112062	13.5 - 14.0			TOC				X
	112063[a]	14.0 - 16.0			X[g]				

See footnotes at end of table

TABLE E-1B
(Continued)

Sample Location	Sample Number	Sample Interval (ft.)	Target Analyte List 20.03.05						
			Screening	Chem/Rad	RCRA/Geotechnical				
			A	C	D	E	F	I	J
SUBSURFACE SAMPLES (Continued)									
1998 (Continued)	112064	16.0 - 17.0	X				X		X
	112065	17.0 - 18.5		X					
	112066	18.5 - 19.0	X				X		X
1999[b]	111920	12.0 - 12.5	X						
	111921	12.5 - 13.0	X						
2955	112955	50.0 - 65.0	X						
	112956[b]				SA				
11000[b]	111762	16.5 - 17.0	X						
	111763	17.0 - 17.5	X						
	111764	17.5 - 18.0	X						
11001[b]	111730	21.0 - 21.5	X						
	111731	21.5 - 22.0	X						
11002[b]	116462	16.5 - 17.0	X						
11003[b]	111854	25.5 - 26.0	X						
11004[b]	111895	24.0 - 24.5	X						
	111896	24.5 - 25.0	X						
11005[b]	111984	10.5 - 11.0	X						
	116121	18.0 - 18.5	X						
11006[b]	111966	22.5 - 24.0	X						
	111969	28.0 - 28.5	X						
	113492	22.5 - 24.0		X[f]					
11007[b]	110678	22.5 - 23.0	X						
11008[b]	116154	21.0 - 21.5	X						
11048[b]	116344	21.0 - 22.0	X						
	116346		X						
	116348	26.0 - 27.5	X						
	116350		X						
11049[b]	116353	6.5 - 8.0	X						
	116355		X						
	116358	11.5 - 12.5	X						
	116360		X						

See footnotes at end of table

0 18

TABLE E-1B
(Continued)

Sample Location	Sample Number	Sample Interval (ft.)	Target Analyte List 20.03.05						
			Screening	Chem/Rad	RCRA/Geotechnical				
			A	C	D	E	F	I	J
SUBSURFACE SAMPLES (Continued)									
11050[b]	116451	10.0 - 12.0	X						
	116453		X						
	116456	16.0 - 18.0	X						
	116458		X						
11051[b]	116438	21.0 - 22.0		X[d]					
	116439		X						
	116441	22.0 - 24.0		X					
	116442		X						
	116445	28.0 - 30.0	X						
	116447		X						
11052[b]	116427	19.0 - 21.0		X					
	116428		X						
	116431	25.0 - 27.0	X						
	116433		X						
11053[b]	116419	18.0 - 20.0	X						
	116420		X						
	116421	24.0 - 26.0	X						
	116422		X						
11054[b]	116340	16.0 - 17.0		X[j]					
	116341	23.0 - 24.0		X[j]					
11055[b]	116331	16.0 - 18.0		X[j]					
	116332	23.5 - 25.0		X[j]					
11056[b]	116335	17.0 - 18.0		X[j]					
	116336	23.0 - 24.0		X[j]					
11057[b]	116337	17.0 - 18.0		X[j]					
	116338	23.0 - 24.0		X[j]					

See footnotes at end of table

TABLE E-1B
(Continued)

TARGET ANALYTE LIST (TAL) DETAILS:

[A] Water/Soil - Total Uranium

[B] Water - Full Hazardous Substance List (HSL), Full Rad., General Groundwater Quality Parameters

[C] Soil/Sediment/Sludge/Waste - Full HSL, Full Rad.

[D] Classification Tests
SG = Specific Gravity
W = Water Content
LL = Liquid Limit
PL = Plastic Limit
Grain Size
SA = Sieve Analysis
HA = Hydrometer Analysis
Other
TOC = Total Organic Carbon

[E] CON = Consolidation Test

[F] HC = Hydraulic Conductivity

[I] Toxicity Characteristic Leaching Procedure (TCLP) plus copper, iron, manganese, and zinc

[J] Dry Unit Weight

NOTES: X = Sample analyzed for parameter(s) indicated, except when shaded.

The shaded areas represent samples or analyses that were specified in the Sampling and Analysis Plan (SAP) but were not collected or performed. These differences may be due to field conditions (e.g., dry well) or laboratory variances (e.g., missed holding time).

[a] Substitute samples for samples specified in the SAP
[b] Additional samples not specified in the SAP
[c] TAL B or C without Rad.
[d] TAL B or C with Full Rad., Metals, and cyanide only
[e] TAL B or C with Full Rad. only
[f] TAL B or C without volatile organic compounds (VOCs)
[g] TAL B or D without total organic carbon (TOC)
[h] Unfiltered metals and Full Rad. only
[i] Total uranium, thorium, and radium
[j] VOCs, semivolatile organic compounds (SVOCs), polychlorinated biphenyls (PCBs), and pesticides only
[k] SVOCs, PCBs, and pesticides only
[l] VOCs, Rad., metals, and cyanide only
[m] VOCs only
[n] Metals only
[o] Total uranium, total thorium, isotopic uranium, and isotopic thorium
[p] PCBs and pesticides only

0 20

TABLE E-2A

INACTIVE FLYASH PILE
CONCENTRATIONS OF DETECTED ANALYTES
ABOVE BACKGROUND IN SURFACE SOIL
PHASE II FIELD INVESTIGATION
OPERABLE UNIT 2 REMEDIAL INVESTIGATION
FERNALD ENVIRONMENTAL MANAGEMENT PROJECT

SAMPLE LOCATION	SAMPLE ID	SAMPLE INTERVALS	SAMPLE DATE	PARAMETER	RESULTS	VAL QUAL	BACKGROUND	UNITS
METALS								
IFP-SS-01	111790	0 - .5	16-APR-93	Arsenic	33.200	-	11.608	mg/kg
IFP-SS-01	111790	0 - .5	16-APR-93	Barium	105.000	-	88.5	mg/kg
IFP-SS-01	111790	0 - .5	16-APR-93	Beryllium	2.100	-	.6	mg/kg
IFP-SS-01	111790	0 - .5	16-APR-93	Cyanide	.700	-	.23	mg/kg
IFP-SS-01	111790	0 - .5	16-APR-93	Lead	31.300	-	29.575	mg/kg
IFP-SS-01	111790	0 - .5	16-APR-93	Selenium	8.200	-	.72	mg/kg
IFP-SS-01	111790	0 - .5	16-APR-93	Sodium	74.500	-	55.145	mg/kg
IFP-SS-01	111790	0 - .5	16-APR-93	Molybdenum	7.200	-	0	mg/kg
IFP-SS-01	111790	0 - .5	16-APR-93	Copper	41.100	-	15.7	mg/kg
IFP-SS-02	111791	0 - .5	16-APR-93	Beryllium	.610	-	.6	mg/kg
IFP-SS-02	111791	0 - .5	16-APR-93	Sodium	123.000	-	55.145	mg/kg
IFP-SS-02	111791	0 - .5	16-APR-93	Silver	3.300	-	0	mg/kg
IFP-SS-02	111791	0 - .5	16-APR-93	Magnesium	21300.000	-	1460	mg/kg
IFP-SS-02	111791	0 - .5	16-APR-93	Calcium	84000.000	-	5296.781	mg/kg
IFP-SS-03	111792	0 - .5	16-APR-93	Calcium	103000.000	-	5296.781	mg/kg
IFP-SS-03	111792	0 - .5	16-APR-93	Sodium	77.000	-	55.145	mg/kg
IFP-SS-03	111792	0 - .5	16-APR-93	Magnesium	16400.000	-	1460	mg/kg
IFP-SS-04	111793	0 - .5	16-APR-93	Beryllium	.720	-	.6	mg/kg
IFP-SS-04	111793	0 - .5	16-APR-93	Calcium	82300.000	-	5296.781	mg/kg
IFP-SS-04	111793	0 - .5	16-APR-93	Cadmium	3.100	-	.77	mg/kg
IFP-SS-04	111793	0 - .5	16-APR-93	Sodium	94.200	-	55.145	mg/kg
IFP-SS-04	111793	0 - .5	16-APR-93	Silver	4.200	-	0	mg/kg
IFP-SS-04	111793	0 - .5	16-APR-93	Potassium	1360.000	-	1349.53	mg/kg
IFP-SS-04	111793	0 - .5	16-APR-93	Magnesium	15400.000	-	1460	mg/kg
IFP-SS-04	111793	0 - .5	16-APR-93	Copper	16.400	-	15.7	mg/kg
IFP-SS-05	111794	0 - .5	16-APR-93	Beryllium	.680	-	.6	mg/kg
IFP-SS-05	111794	0 - .5	16-APR-93	Potassium	2030.000	-	1349.53	mg/kg
IFP-SS-05	111794	0 - .5	16-APR-93	Molybdenum	5.100	-	0	mg/kg
IFP-SS-05	111794	0 - .5	16-APR-93	Magnesium	25900.000	-	1460	mg/kg
IFP-SS-05	111794	0 - .5	16-APR-93	Calcium	81000.000	-	5296.781	mg/kg
IFP-SS-05	111794	0 - .5	16-APR-93	Sodium	155.000	-	55.145	mg/kg
IFP-SS-05	111794	0 - .5	16-APR-93	Silver	5.000	-	0	mg/kg
IFP-SS-06	111795	0 - .5	16-APR-93	Beryllium	.700	-	.6	mg/kg
IFP-SS-06	111795	0 - .5	16-APR-93	Magnesium	38000.000	-	1460	mg/kg
IFP-SS-06	111795	0 - .5	16-APR-93	Calcium	74000.000	-	5296.781	mg/kg
IFP-SS-06	111795	0 - .5	16-APR-93	Molybdenum	4.800	-	0	mg/kg

TABLE E-2A
(Continued)

SAMPLE LOCATION	SAMPLE ID	SAMPLE INTERVALS	SAMPLE DATE	PARAMETER	RESULTS	VAL QUAL	BACKGROUND	UNITS
METALS (Continued)								
IFP-SS-06	111795	0 - .5	16-APR-93	Sodium	139.000	-	55.145	mg/kg
IFP-SS-06	111795	0 - .5	16-APR-93	Silver	4.800	-	0	mg/kg
IFP-SS-06	111795	0 - .5	16-APR-93	Potassium	1820.000	-	1349.53	mg/kg
IFP-SS-07	111796	0 - .5	16-APR-93	Barium	89.500	-	88.5	mg/kg
IFP-SS-07	111796	0 - .5	16-APR-93	Beryllium	.910	-	.6	mg/kg
IFP-SS-07	111796	0 - .5	16-APR-93	Calcium	142000.000	-	5296.781	mg/kg
IFP-SS-07	111796	0 - .5	16-APR-93	Sodium	223.000	-	55.145	mg/kg
IFP-SS-07	111796	0 - .5	16-APR-93	Silver	2.800	-	0	mg/kg
IFP-SS-07	111796	0 - .5	16-APR-93	Potassium	1370.000	-	1349.53	mg/kg
IFP-SS-07	111796	0 - .5	16-APR-93	Magnesium	55000.000	-	1460	mg/kg
RADIONUCLIDES								
IFP-SS-01	111790	0 - .5	16-APR-93	GROSS ALPHA	37.800	-	0	pCi/g
IFP-SS-01	111790	0 - .5	16-APR-93	GROSS BETA	30.800	-	0	pCi/g
IFP-SS-01	111790	0 - .5	16-APR-93	RA-226	2.700	-	1.528	pCi/g
IFP-SS-01	111790	0 - .5	16-APR-93	RA-228	2.620	-	1.17	pCi/g
IFP-SS-01	111790	0 - .5	16-APR-93	SR-90	1.140	J	0	pCi/g
IFP-SS-01	111790	0 - .5	16-APR-93	U-TOTAL	12.300	-	3.24	mg/kg
IFP-SS-01	111790	0 - .5	16-APR-93	U-238	2.980	-	1.27	pCi/g
IFP-SS-01	111790	0 - .5	16-APR-93	U-234	3.110	-	1.319	pCi/g
IFP-SS-01	111790	0 - .5	16-APR-93	TH-TOTAL	21.400	-	10.7	mg/kg
IFP-SS-01	111790	0 - .5	16-APR-93	TH-232	2.330	-	1.469	pCi/g
IFP-SS-01	111790	0 - .5	16-APR-93	TH-230	2.770	-	2.112	pCi/g
IFP-SS-01	111790	0 - .5	16-APR-93	TH-228	2.710	-	1.519	pCi/g
IFP-SS-02	111791	0 - .5	16-APR-93	GROSS ALPHA	20.100	-	0	pCi/g
IFP-SS-02	111791	0 - .5	16-APR-93	U-234	1.320	-	1.319	pCi/g
IFP-SS-02	111791	0 - .5	16-APR-93	U-TOTAL	5.010	-	3.24	mg/kg
IFP-SS-02	111791	0 - .5	16-APR-93	U-238	1.440	-	1.27	pCi/g
IFP-SS-02	111791	0 - .5	16-APR-93	GROSS BETA	21.800	-	0	pCi/g
IFP-SS-02	111791	0 - .5	16-APR-93	PU-238	.081	J	0	pCi/g
IFP-SS-02	111791	0 - .5	16-APR-93	SR-90	.525	J	0	pCi/g
IFP-SS-03	111792	0 - .5	16-APR-93	GROSS BETA	11.900	-	0	pCi/g
IFP-SS-03	111792	0 - .5	16-APR-93	PU-238	.057	J	0	pCi/g
IFP-SS-03	111792	0 - .5	16-APR-93	NP-237	.030	N	0	pCi/g
IFP-SS-04	111793	0 - .5	16-APR-93	GROSS ALPHA	60.200	-	0	pCi/g
IFP-SS-04	111793	0 - .5	16-APR-93	U-TOTAL	19.700	-	3.24	mg/kg
IFP-SS-04	111793	0 - .5	16-APR-93	U-238	6.120	-	1.27	pCi/g
IFP-SS-04	111793	0 - .5	16-APR-93	U-235/236	.276	J	.181	pCi/g
IFP-SS-04	111793	0 - .5	16-APR-93	U-234	6.180	-	1.319	pCi/g
IFP-SS-04	111793	0 - .5	16-APR-93	SR-90	.854	J	0	pCi/g
IFP-SS-04	111793	0 - .5	16-APR-93	RA-228	1.200	-	1.17	pCi/g
IFP-SS-04	111793	0 - .5	16-APR-93	NP-237	.137	N	0	pCi/g
IFP-SS-04	111793	0 - .5	16-APR-93	GROSS BETA	36.300	-	0	pCi/g

TABLE E-2A
(Continued)

SAMPLE LOCATION	SAMPLE ID	SAMPLE INTERVALS	SAMPLE DATE	PARAMETER	RESULTS	VAL QUAL	BACKGROUND	UNITS
RADIONUCLIDES (Continued)								
IFP-SS-05	111794	0 - .5	16-APR-93	GROSS ALPHA	25.900	-	0	pCi/g
IFP-SS-05	111794	0 - .5	16-APR-93	NP-237	.041	N	0	pCi/g
IFP-SS-05	111794	0 - .5	16-APR-93	GROSS BETA	36.300	-	0	pCi/g
IFP-SS-05	111794	0 - .5	16-APR-93	PU-238	.044	J	0	pCi/g
IFP-SS-05	111794	0 - .5	16-APR-93	PU-239/240	.021	J	0	pCi/g
IFP-SS-05	111794	0 - .5	16-APR-93	U-TOTAL	20.400	-	3.24	mg/kg
IFP-SS-05	111794	0 - .5	16-APR-93	U-238	7.560	-	1.27	pCi/g
IFP-SS-05	111794	0 - .5	16-APR-93	U-235/236	.335	-	.181	pCi/g
IFP-SS-05	111794	0 - .5	16-APR-93	U-234	7.690	-	1.319	pCi/g
IFP-SS-05	111794	0 - .5	16-APR-93	TH-230	2.200	-	2.112	pCi/g
IFP-SS-05	111794	0 - .5	16-APR-93	SR-90	.629	J	0	pCi/g
IFP-SS-06	111795	0 - .5	16-APR-93	GROSS ALPHA	39.200	-	0	pCi/g
IFP-SS-06	111795	0 - .5	16-APR-93	U-TOTAL	32.100	-	3.24	mg/kg
IFP-SS-06	111795	0 - .5	16-APR-93	U-238	11.200	-	1.27	pCi/g
IFP-SS-06	111795	0 - .5	16-APR-93	U-235/236	.602	-	.181	pCi/g
IFP-SS-06	111795	0 - .5	16-APR-93	U-234	10.600	-	1.319	pCi/g
IFP-SS-06	111795	0 - .5	16-APR-93	RA-228	1.480	-	1.17	pCi/g
IFP-SS-06	111795	0 - .5	16-APR-93	GROSS BETA	43.900	-	0	pCi/g
IFP-SS-07	111796	0 - .5	16-APR-93	GROSS ALPHA	28.200	-	0	pCi/g
IFP-SS-07	111796	0 - .5	16-APR-93	U-TOTAL	31.100	-	3.24	mg/kg
IFP-SS-07	111796	0 - .5	16-APR-93	U-238	10.400	-	1.27	pCi/g
IFP-SS-07	111796	0 - .5	16-APR-93	U-235/236	.433	J	.181	pCi/g
IFP-SS-07	111796	0 - .5	16-APR-93	U-234	10.100	-	1.319	pCi/g
IFP-SS-07	111796	0 - .5	16-APR-93	NP-237	.035	N	0	pCi/g
IFP-SS-07	111796	0 - .5	16-APR-93	SR-90	.770	J	0	pCi/g
IFP-SS-07	111796	0 - .5	16-APR-93	GROSS BETA	32.700	-	0	pCi/g
VOLATILE ORGANICS								
IFP-SS-01	111790	0 - .5	16-APR-93	Toluene	55.000	-	0	ug/kg
IFP-SS-02	111791	0 - .5	16-APR-93	Toluene	3.000	J	0	ug/kg
IFP-SS-03	111792	0 - .5	16-APR-93	Toluene	5.000	J	0	ug/kg
IFP-SS-04	111793	0 - .5	16-APR-93	Acetone	10.000	J	0	ug/kg
IFP-SS-05	111794	0 - .5	16-APR-93	Acetone	2.000	J	0	ug/kg
IFP-SS-07	111796	0 - .5	16-APR-93	2-Butanone	3.000	J	0	ug/kg
IFP-SS-07	111796	0 - .5	16-APR-93	Acetone	12.000	J	0	ug/kg
SEMIVOLATILE ORGANICS								
IFP-SS-07	111796	0 - .5	16-APR-93	2-Methylnaphthalene	160.000	J	0	ug/kg
IFP-SS-07	111796	0 - .5	16-APR-93	Dibenzo(a,h)anthracene	2200.000	-	0	ug/kg
IFP-SS-07	111796	0 - .5	16-APR-93	Fluorene	510.000	-	0	ug/kg
IFP-SS-07	111796	0 - .5	16-APR-93	Naphthalene	100.000	J	0	ug/kg
IFP-SS-07	111796	0 - .5	16-APR-93	Dibenzofuran	250.000	J	0	ug/kg
IFP-SS-07	111796	0 - .5	16-APR-93	Carbazole	510.000	-	0	ug/kg

TABLE E-2A
(Continued)

SAMPLE LOCATION	SAMPLE ID	SAMPLE INTERVALS	SAMPLE DATE	PARAMETER	RESULTS	VAL QUAL	BACKGROUND	UNITS
SEMIVOLATILE ORGANICS (Continued)								
IFP-SS-07	111796	0 - .5	16-APR-93	Acenaphthene	460.000	-	0	ug/kg
IFP-SS-07	111796	0 - .5	16-APR-93	Anthracene	1700.000	J	0	ug/kg
IFP-SS-07	111796	0 - .5	16-APR-93	Acenaphthylene	1800.000	J	0	ug/kg

TABLE E-2B

INACTIVE FLYASH PILE
CONCENTRATIONS OF DETECTED ANALYTES
ABOVE BACKGROUND IN SUBSURFACE SOIL
PHASE I FIELD INVESTIGATION
OPERABLE UNIT 2 REMEDIAL INVESTIGATION
FERNALD ENVIRONMENTAL MANAGEMENT PROJECT

SAMPLE LOCATION	SAMPLE ID	SAMPLE INTERVALS	SAMPLE DATE	PARAMETER	RESULTS	VAL QUAL	BACKGROUND	UNITS
METALS								
1708	067096	7.5 - 9	14-JUN-91	Barium	315.000	-	121.064	mg/kg
1708	067096	7.5 - 9	14-JUN-91	Beryllium	1.800	-	.62	mg/kg
1708	067096	7.5 - 9	14-JUN-91	Copper	27.900	-	20.23	mg/kg
1708	067096	7.5 - 9	14-JUN-91	Cyanide	.590	J	.17	mg/kg
1708	067096	7.5 - 9	14-JUN-91	Molybdenum	8.900	-	.27	mg/kg
1708	067096	7.5 - 9	14-JUN-91	Silver	5.900	-	0	mg/kg
1708	067096	7.5 - 9	14-JUN-91	Selenium	2.800	-	0	mg/kg
1708	067102	16.5 - 18	16-JUN-91	Barium	294.000	-	121.064	mg/kg
1708	067102	16.5 - 18	16-JUN-91	Beryllium	2.000	-	.62	mg/kg
1708	067102	16.5 - 18	16-JUN-91	Cyanide	1.200	J	.17	mg/kg
1708	067102	16.5 - 18	16-JUN-91	Molybdenum	9.400	-	.27	mg/kg
1708	067102	16.5 - 18	16-JUN-91	Silver	8.300	-	0	mg/kg
1708	067102	16.5 - 18	16-JUN-91	Selenium	2.900	-	0	mg/kg
1708	067102	16.5 - 18	16-JUN-91	Lead	67.100	J	15.78	mg/kg
1708	067102	16.5 - 18	16-JUN-91	Copper	29.500	-	20.23	mg/kg
1708	067102	16.5 - 18	16-JUN-91	Cadmium	1.300	-	.91	mg/kg
1708	067112	31.5 - 33	16-JUN-91	Molybdenum	9.200	-	.27	mg/kg
1709	067064	7.5 - 9	06-JUN-91	Arsenic	16.300	-	9.704	mg/kg
1709	067064	7.5 - 9	06-JUN-91	Barium	286.000	-	121.064	mg/kg
1709	067064	7.5 - 9	06-JUN-91	Copper	28.500	-	20.23	mg/kg
1709	067064	7.5 - 9	06-JUN-91	Cyanide	.270	-	.17	mg/kg
1709	067064	7.5 - 9	06-JUN-91	Selenium	.740	-	0	mg/kg
1709	067064	7.5 - 9	06-JUN-91	Molybdenum	3.500	-	.27	mg/kg
1709	067064	7.5 - 9	06-JUN-91	Beryllium	3.900	-	.62	mg/kg
1709	067071	13.5 - 15	06-JUN-91	Arsenic	74.800	-	9.704	mg/kg
1709	067071	13.5 - 15	06-JUN-91	Barium	252.000	-	121.064	mg/kg
1709	067071	13.5 - 15	06-JUN-91	Copper	28.800	-	20.23	mg/kg
1709	067071	13.5 - 15	06-JUN-91	Cyanide	.230	-	.17	mg/kg
1709	067071	13.5 - 15	06-JUN-91	Thallium	.800	J	.49	mg/kg
1709	067071	13.5 - 15	06-JUN-91	Selenium	4.100	-	0	mg/kg
1709	067071	13.5 - 15	06-JUN-91	Molybdenum	4.900	-	.27	mg/kg
1709	067071	13.5 - 15	06-JUN-91	Beryllium	4.300	-	.62	mg/kg
1710	067029	4.5 - 5	31-MAY-91	Arsenic	31.700	-	9.704	mg/kg
1710	067029	4.5 - 5	31-MAY-91	Beryllium	6.700	-	.62	mg/kg
1710	067029	4.5 - 5	31-MAY-91	Barium	637.000	-	121.064	mg/kg
1710	067029	4.5 - 5	31-MAY-91	Cyanide	.690	-	.17	mg/kg

TABLE E-2B
(Continued)

SAMPLE LOCATION	SAMPLE ID	SAMPLE INTERVALS	SAMPLE DATE	PARAMETER	RESULTS	VAL QUAL	BACKGROUND	UNITS
METALS (Continued)								
1710	067029	4.5 - 5	31-MAY-91	Sodium	294.000	-	227.947	mg/kg
1710	067029	4.5 - 5	31-MAY-91	Silver	2.800	J	0	mg/kg
1710	067029	4.5 - 5	31-MAY-91	Selenium	1.400	-	0	mg/kg
1710	067029	4.5 - 5	31-MAY-91	Molybdenum	4.300	-	.27	mg/kg
1710	067029	4.5 - 5	31-MAY-91	Copper	34.400	-	20.23	mg/kg
1710	067032	9 - 10.5	31-MAY-91	Arsenic	20.700	-	9.704	mg/kg
1710	067032	9 - 10.5	31-MAY-91	Barium	892.000	-	121.064	mg/kg
1710	067032	9 - 10.5	31-MAY-91	Cadmium	1.000	-	.91	mg/kg
1710	067032	9 - 10.5	31-MAY-91	Cyanide	.620	-	.17	mg/kg
1710	067032	9 - 10.5	31-MAY-91	Sodium	271.000	-	227.947	mg/kg
1710	067032	9 - 10.5	31-MAY-91	Silver	2.700	J	0	mg/kg
1710	067032	9 - 10.5	31-MAY-91	Selenium	3.100	J	0	mg/kg
1710	067032	9 - 10.5	31-MAY-91	Molybdenum	3.400	-	.27	mg/kg
1710	067032	9 - 10.5	31-MAY-91	Copper	26.600	-	20.23	mg/kg
1710	067032	9 - 10.5	31-MAY-91	Beryllium	2.400	-	.62	mg/kg
1710	067047	28.5 - 30	01-JUN-91	Antimony	15.000	J	0	mg/kg
1710	067047	28.5 - 30	01-JUN-91	Molybdenum	3.600	-	.27	mg/kg
1710	067047	28.5 - 30	01-JUN-91	Copper	21.300	-	20.23	mg/kg
1710	067047	28.5 - 30	01-JUN-91	Cyanide	.420	-	.17	mg/kg
1710	067047	28.5 - 30	01-JUN-91	Silver	4.300	J	0	mg/kg
1710	067047	28.5 - 30	01-JUN-91	Cadmium	4.100	-	.91	mg/kg
1711	067012	4.5 - 6	29-MAY-91	Antimony	8.800	J	0	mg/kg
1711	067012	4.5 - 6	29-MAY-91	Barium	360.000	-	121.064	mg/kg
1711	067012	4.5 - 6	29-MAY-91	Thallium	1.000	-	.49	mg/kg
1711	067012	4.5 - 6	29-MAY-91	Cyanide	.600	-	.17	mg/kg
1711	067012	4.5 - 6	29-MAY-91	Selenium	1.600	J	0	mg/kg
1711	067012	4.5 - 6	29-MAY-91	Molybdenum	3.200	-	.27	mg/kg
1711	067012	4.5 - 6	29-MAY-91	Beryllium	3.000	-	.62	mg/kg
1711	067012	4.5 - 6	29-MAY-91	Arsenic	28.000	J	9.704	mg/kg
1711	067015	9 - 10.5	29-MAY-91	Antimony	10.400	J	0	mg/kg
1711	067015	9 - 10.5	29-MAY-91	Cyanide	.530	-	.17	mg/kg
1711	067015	9 - 10.5	29-MAY-91	Thallium	1.000	-	.49	mg/kg
1711	067015	9 - 10.5	29-MAY-91	Selenium	2.700	-	0	mg/kg
1711	067015	9 - 10.5	29-MAY-91	Molybdenum	4.000	-	.27	mg/kg
1711	067015	9 - 10.5	29-MAY-91	Copper	24.100	-	20.23	mg/kg
1711	067015	9 - 10.5	29-MAY-91	Beryllium	2.500	-	.62	mg/kg
1711	067015	9 - 10.5	29-MAY-91	Arsenic	35.400	J	9.704	mg/kg
1711	067015	9 - 10.5	29-MAY-91	Barium	373.000	-	121.064	mg/kg
1711	067020	18 - 19.5	29-MAY-91	Antimony	16.300	J	0	mg/kg
1711	067020	18 - 19.5	29-MAY-91	Beryllium	.770	-	.62	mg/kg
1711	067020	18 - 19.5	29-MAY-91	Cadmium	2.000	-	.91	mg/kg
1711	067020	18 - 19.5	29-MAY-91	Copper	44.900	-	20.23	mg/kg
1711	067020	18 - 19.5	29-MAY-91	Cyanide	.180	-	.17	mg/kg

TABLE E-2B
(Continued)

SAMPLE LOCATION	SAMPLE ID	SAMPLE INTERVALS	SAMPLE DATE	PARAMETER	RESULTS	VAL QUAL	BACKGROUND	UNITS
METALS (Continued)								
1711	067020	18 - 19.5	29-MAY-91	Zinc	102.000	-	73.158	mg/kg
1711	067020	18 - 19.5	29-MAY-91	Silver	4.400	-	0	mg/kg
1711	067020	18 - 19.5	29-MAY-91	Selenium	.730	J	0	mg/kg
1711	067020	18 - 19.5	29-MAY-91	Molybdenum	3.300	-	.27	mg/kg
1711	067020	18 - 19.5	29-MAY-91	Mercury	.440	-	.29	mg/kg
1711	067020	18 - 19.5	29-MAY-91	Lead	57.000	-	15.78	mg/kg
1791	067122	28.5 - 30	25-JUN-91	Molybdenum	8.100	-	.27	mg/kg
1791	067122	28.5 - 30	25-JUN-91	Silver	2.800	J	0	mg/kg
RADIONUCLIDES								
1016	007233	1.5 - 3	15-OCT-87	U-234	10.700	J	1.034	pCi/g
1016	007233	1.5 - 3	15-OCT-87	U-238	11.400	J	1.122	pCi/g
1047	007301	9 - 10.5	16-OCT-87	TC-99	1.500	-	0	pCi/g
1708	067095	6 - 7.5	14-JUN-91	RA-226	3.070	J	1.47	pCi/g
1708	067095	6 - 7.5	14-JUN-91	TH-232	2.420	J	1.269	pCi/g
1708	067095	6 - 7.5	14-JUN-91	U-TOTAL	15.600	J	2.54	mg/kg
1708	067095	6 - 7.5	14-JUN-91	U-238	3.940	J	1.122	pCi/g
1708	067095	6 - 7.5	14-JUN-91	U-234	3.650	J	1.034	pCi/g
1708	067095	6 - 7.5	14-JUN-91	TH-TOTAL	21.800	J	9.47	mg/kg
1708	067095	6 - 7.5	14-JUN-91	RA-228	3.130	J	1.325	pCi/g
1708	067095	6 - 7.5	14-JUN-91	SR-90	1.230	J	.56	pCi/g
1708	067095	6 - 7.5	14-JUN-91	TH-228	3.140	J	1.341	pCi/g
1708	067095	6 - 7.5	14-JUN-91	TH-230	2.980	J	1.897	pCi/g
1708	067101	15 - 16.5	16-JUN-91	RA-226	2.660	J	1.47	pCi/g
1708	067101	15 - 16.5	16-JUN-91	U-TOTAL	11.100	J	2.54	mg/kg
1708	067101	15 - 16.5	16-JUN-91	U-238	2.970	J	1.122	pCi/g
1708	067101	15 - 16.5	16-JUN-91	U-234	2.880	J	1.034	pCi/g
1708	067101	15 - 16.5	16-JUN-91	TH-TOTAL	16.300	J	9.47	mg/kg
1708	067101	15 - 16.5	16-JUN-91	TH-232	1.810	J	1.269	pCi/g
1708	067101	15 - 16.5	16-JUN-91	RA-228	2.460	J	1.325	pCi/g
1708	067101	15 - 16.5	16-JUN-91	SR-90	1.250	J	.56	pCi/g
1708	067101	15 - 16.5	16-JUN-91	TH-228	2.700	J	1.341	pCi/g
1708	067101	15 - 16.5	16-JUN-91	TH-230	2.730	J	1.897	pCi/g
1708	067111	30 - 31.5	16-JUN-91	CS-137	.200	J	0	pCi/g
1708	067111	30 - 31.5	16-JUN-91	RU-106	1.000	J	0	pCi/g
1708	067111	30 - 31.5	16-JUN-91	NP-237	.600	J	0	pCi/g
1708	067111	30 - 31.5	16-JUN-91	U-TOTAL	68.200	J	2.54	mg/kg
1708	067111	30 - 31.5	16-JUN-91	U-238	21.940	J	1.122	pCi/g
1708	067111	30 - 31.5	16-JUN-91	U-235/236	.687	J	.142	pCi/g
1708	067111	30 - 31.5	16-JUN-91	U-234	20.640	J	1.034	pCi/g
1708	067111	30 - 31.5	16-JUN-91	TH-TOTAL	10.600	J	9.47	mg/kg
1708	067111	30 - 31.5	16-JUN-91	TH-230	2.930	J	1.897	pCi/g
1708	067111	30 - 31.5	16-JUN-91	TH-228	1.590	J	1.341	pCi/g

TABLE E-2B
(Continued)

SAMPLE LOCATION	SAMPLE ID	SAMPLE INTERVALS	SAMPLE DATE	PARAMETER	RESULTS	VAL QUAL	BACKGROUND	UNITS
RADIONUCLIDES (Continued)								
1708	067111	30 - 31.5	16-JUN-91	RA-226	1.720	J	1.47	pCi/g
1708	067111	30 - 31.5	16-JUN-91	PU-238	.600	J	0	pCi/g
1709	067062	4.5 - 6	04-JUN-91	RA-224	2.290	-	1.019	pCi/g
1709	067062	4.5 - 6	04-JUN-91	TH-232	2.020	J	1.269	pCi/g
1709	067062	4.5 - 6	04-JUN-91	U-TOTAL	67.000	-	2.54	mg/kg
1709	067062	4.5 - 6	04-JUN-91	U-238	11.000	J	1.122	pCi/g
1709	067062	4.5 - 6	04-JUN-91	U-238	5.600	-	1.122	pCi/L
1709	067062	4.5 - 6	04-JUN-91	U-235/236	.960	J	.142	pCi/g
1709	067062	4.5 - 6	04-JUN-91	U-234	4.400	-	1.034	pCi/g
1709	067062	4.5 - 6	04-JUN-91	TH-TOTAL	18.300	J	9.47	mg/kg
1709	067062	4.5 - 6	04-JUN-91	TH-230	3.740	J	1.897	pCi/g
1709	067062	4.5 - 6	04-JUN-91	TH-228	2.080	J	1.341	pCi/g
1709	067062	4.5 - 6	04-JUN-91	RA-228	1.660	-	1.325	pCi/g
1709	067062	4.5 - 6	04-JUN-91	RA-226	1.960	-	1.47	pCi/g
1709	067072	15 - 16.5	06-JUN-91	NP-237	.780	J	0	pCi/g
1709	067072	15 - 16.5	06-JUN-91	PB-210	1.250	-	.857	pCi/g
1709	067072	15 - 16.5	06-JUN-91	U-TOTAL	14.500	J	2.54	mg/kg
1709	067072	15 - 16.5	06-JUN-91	U-238	5.090	-	1.122	pCi/g
1709	067072	15 - 16.5	06-JUN-91	U-238	3.430	J	1.122	pCi/g
1709	067072	15 - 16.5	06-JUN-91	U-234	4.630	-	1.034	pCi/g
1709	067072	15 - 16.5	06-JUN-91	TH-TOTAL	23.900	J	9.47	mg/kg
1709	067072	15 - 16.5	06-JUN-91	TH-232	2.650	J	1.269	pCi/g
1709	067072	15 - 16.5	06-JUN-91	TH-230	4.500	J	1.897	pCi/g
1709	067072	15 - 16.5	06-JUN-91	TH-228	2.780	J	1.341	pCi/g
1709	067072	15 - 16.5	06-JUN-91	RA-228	2.200	-	1.325	pCi/g
1709	067072	15 - 16.5	06-JUN-91	RA-226	2.790	-	1.47	pCi/g
1709	067072	15 - 16.5	06-JUN-91	RA-224	2.960	-	1.019	pCi/g
1709	067081	28.5 - 30	11-JUN-91	PB-210	1.170	-	.857	pCi/g
1709	067081	28.5 - 30	11-JUN-91	U-TOTAL	14.400	J	2.54	mg/kg
1709	067081	28.5 - 30	11-JUN-91	U-238	3.800	-	1.122	pCi/g
1709	067081	28.5 - 30	11-JUN-91	U-238	3.360	J	1.122	pCi/g
1709	067081	28.5 - 30	11-JUN-91	U-234	3.520	-	1.034	pCi/g
1709	067081	28.5 - 30	11-JUN-91	TH-TOTAL	20.000	-	9.47	mg/kg
1709	067081	28.5 - 30	11-JUN-91	TH-232	2.210	-	1.269	pCi/g
1709	067081	28.5 - 30	11-JUN-91	TH-230	3.070	-	1.897	pCi/g
1709	067081	28.5 - 30	11-JUN-91	TH-228	2.510	-	1.341	pCi/g
1709	067081	28.5 - 30	11-JUN-91	RA-228	2.190	-	1.325	pCi/g
1709	067081	28.5 - 30	11-JUN-91	RA-226	2.130	-	1.47	pCi/g
1709	067081	28.5 - 30	11-JUN-91	RA-224	3.050	-	1.019	pCi/g
1710	067028	3 - 4.5	31-MAY-91	PB-210	1.180	-	.857	pCi/g
1710	067028	3 - 4.5	31-MAY-91	U-TOTAL	38.200	J	2.54	mg/kg
1710	067028	3 - 4.5	31-MAY-91	U-238	11.800	-	1.122	pCi/g
1710	067028	3 - 4.5	31-MAY-91	U-238	9.570	J	1.122	pCi/g

TABLE E-2B
(Continued)

SAMPLE LOCATION	SAMPLE ID	SAMPLE INTERVALS	SAMPLE DATE	PARAMETER	RESULTS	VAL QUAL	BACKGROUND	UNITS
RADIONUCLIDES (Continued)								
1710	067028	3 - 4.5	31-MAY-91	U-235/236	.880	J	.142	pCi/g
1710	067028	3 - 4.5	31-MAY-91	U-234	11.400	-	1.034	pCi/g
1710	067028	3 - 4.5	31-MAY-91	TH-TOTAL	22.200	J	9.47	mg/kg
1710	067028	3 - 4.5	31-MAY-91	TH-232	2.470	J	1.269	pCi/g
1710	067028	3 - 4.5	31-MAY-91	TH-230	3.310	J	1.897	pCi/g
1710	067028	3 - 4.5	31-MAY-91	TH-228	2.640	J	1.341	pCi/g
1710	067028	3 - 4.5	31-MAY-91	RA-228	2.460	-	1.325	pCi/g
1710	067028	3 - 4.5	31-MAY-91	RA-226	2.350	-	1.47	pCi/g
1710	067028	3 - 4.5	31-MAY-91	RA-224	3.050	-	1.019	pCi/g
1710	067043	22.5 - 23	01-JUN-91	PB-210	2.750	J	.857	pCi/g
1710	067043	22.5 - 23	01-JUN-91	U-TOTAL	128.000	J	2.54	mg/kg
1710	067043	22.5 - 23	01-JUN-91	U-235/236	3.290	J	.142	pCi/g
1710	067043	22.5 - 23	01-JUN-91	U-234	51.400	J	1.034	pCi/g
1710	067043	22.5 - 23	01-JUN-91	TH-TOTAL	36.100	-	9.47	mg/kg
1710	067043	22.5 - 23	01-JUN-91	TH-232	4.000	-	1.269	pCi/g
1710	067043	22.5 - 23	01-JUN-91	TH-230	12.800	J	1.897	pCi/g
1710	067043	22.5 - 23	01-JUN-91	TH-228	4.100	J	1.341	pCi/g
1710	067043	22.5 - 23	01-JUN-91	RA-228	2.880	J	1.325	pCi/g
1710	067043	22.5 - 23	01-JUN-91	RA-226	6.360	J	1.47	pCi/g
1710	067043	22.5 - 23	01-JUN-91	RA-224	3.110	J	1.019	pCi/g
1710	067046	27 - 28.5	01-JUN-91	NP-237	.600	J	0	pCi/g
1710	067046	27 - 28.5	01-JUN-91	U-TOTAL	660.000	-	2.54	mg/kg
1710	067046	27 - 28.5	01-JUN-91	U-238	180.000	-	1.122	pCi/g
1710	067046	27 - 28.5	01-JUN-91	U-238	191.000	-	1.122	pCi/g
1710	067046	27 - 28.5	01-JUN-91	U-235/236	18.500	-	.142	pCi/g
1710	067046	27 - 28.5	01-JUN-91	U-234	187.000	-	1.034	pCi/g
1710	067046	27 - 28.5	01-JUN-91	TH-TOTAL	29.600	-	9.47	mg/kg
1710	067046	27 - 28.5	01-JUN-91	TH-232	3.280	-	1.269	pCi/g
1710	067046	27 - 28.5	01-JUN-91	TH-230	54.600	-	1.897	pCi/g
1710	067046	27 - 28.5	01-JUN-91	TH-228	3.030	J	1.341	pCi/g
1710	067046	27 - 28.5	01-JUN-91	TC-99	.900	J	0	pCi/g
1710	067046	27 - 28.5	01-JUN-91	SR-90	1.740	-	.56	pCi/g
1710	067046	27 - 28.5	01-JUN-91	RA-228	3.120	-	1.325	pCi/g
1710	067046	27 - 28.5	01-JUN-91	RA-226	36.000	-	1.47	pCi/g
1710	067046	27 - 28.5	01-JUN-91	RA-224	3.490	-	1.019	pCi/g
1710	067046	27 - 28.5	01-JUN-91	PB-210	16.800	-	.857	pCi/g
1711	067010	1.5 - 3	23-MAY-91	PB-210	1.240	-	.857	pCi/g
1711	067010	1.5 - 3	23-MAY-91	RA-228	2.160	-	1.325	pCi/g
1711	067010	1.5 - 3	23-MAY-91	RA-226	2.740	-	1.47	pCi/g
1711	067010	1.5 - 3	23-MAY-91	U-235/236	5.340	-	.142	pCi/g
1711	067010	1.5 - 3	23-MAY-91	U-238	40.100	-	1.122	pCi/g
1711	067010	1.5 - 3	23-MAY-91	U-TOTAL	123.000	-	2.54	mg/kg
1711	067010	1.5 - 3	23-MAY-91	U-238	34.100	-	1.122	pCi/g

TABLE E-2B
(Continued)

SAMPLE LOCATION	SAMPLE ID	SAMPLE INTERVALS	SAMPLE DATE	PARAMETER	RESULTS	VAL QUAL	BACKGROUND	UNITS
RADIONUCLIDES (Continued)								
1711	067010	1.5 - 3	23-MAY-91	U-234	42.000	-	1.034	pCi/g
1711	067010	1.5 - 3	23-MAY-91	RA-224	2.940	-	1.019	pCi/g
1711	067014	7.5 - 9	29-MAY-91	PB-210	1.870	-	.857	pCi/g
1711	067014	7.5 - 9	29-MAY-91	RA-226	4.110	-	1.47	pCi/g
1711	067014	7.5 - 9	29-MAY-91	RA-224	3.220	-	1.019	pCi/g
1711	067014	7.5 - 9	29-MAY-91	U-TOTAL	18.200	J	2.54	mg/kg
1711	067014	7.5 - 9	29-MAY-91	U-238	5.670	-	1.122	pCi/g
1711	067014	7.5 - 9	29-MAY-91	U-238	6.070	J	1.122	pCi/g
1711	067014	7.5 - 9	29-MAY-91	U-235/236	.870	-	.142	pCi/g
1711	067014	7.5 - 9	29-MAY-91	U-234	5.930	-	1.034	pCi/g
1711	067014	7.5 - 9	29-MAY-91	TH-TOTAL	28.000	-	9.47	mg/kg
1711	067014	7.5 - 9	29-MAY-91	TH-232	3.100	-	1.269	pCi/g
1711	067014	7.5 - 9	29-MAY-91	TH-230	6.090	-	1.897	pCi/g
1711	067014	7.5 - 9	29-MAY-91	TH-228	3.340	-	1.341	pCi/g
1711	067014	7.5 - 9	29-MAY-91	RA-228	2.670	-	1.325	pCi/g
1711	067019	13.5 - 15	29-MAY-91	RA-224	1.710	-	1.019	pCi/g
1711	067019	13.5 - 15	29-MAY-91	U-TOTAL	18.000	J	2.54	mg/kg
1711	067019	13.5 - 15	29-MAY-91	U-238	3.520	J	1.122	pCi/g
1711	067019	13.5 - 15	29-MAY-91	U-238	4.540	-	1.122	pCi/g
1711	067019	13.5 - 15	29-MAY-91	U-234	4.950	-	1.034	pCi/g
1711	067019	13.5 - 15	29-MAY-91	TH-TOTAL	9.890	J	9.47	mg/kg
1711	067019	13.5 - 15	29-MAY-91	RA-226	1.480	-	1.47	pCi/g
1711	067019	13.5 - 15	29-MAY-91	TH-230	2.140	J	1.897	pCi/g
1711	067019	13.5 - 15	29-MAY-91	TH-228	1.560	J	1.341	pCi/g
1791	067121	27 - 28.5	25-JUN-91	U-TOTAL	873.000	J	2.54	mg/kg
1849	067618	28.5 - 30	22-FEB-92	RA-224	1.020	J	1.019	pCi/g
1849	067618	28.5 - 30	22-FEB-92	SR-90	.770	-	.56	pCi/g
1849	067618	28.5 - 30	22-FEB-92	TH-228	1.440	-	1.341	pCi/g
1849	067618	28.5 - 30	22-FEB-92	U-TOTAL	6.930	J	2.54	mg/kg
1849	067618	28.5 - 30	22-FEB-92	U-238	1.760	-	1.122	pCi/g
1849	067618	28.5 - 30	22-FEB-92	U-238	1.470	J	1.122	pCi/g
1849	067618	28.5 - 30	22-FEB-92	U-234	1.730	-	1.034	pCi/g
2047	008960	25 - 26.5	20-DEC-88	SR-90	.700	-	.56	pCi/g
2401	038486	0 - 65	06-MAR-92	U-TOTAL	4.640	-	2.54	mg/kg
4016	010450	95 - 96.5	20-DEC-88	SR-90	4.000	-	.56	pCi/g
4016	010454	115 - 116.5	21-DEC-88	SR-90	.900	-	.56	pCi/g
VOLATILE ORGANICS								
1708	067096	7.5 - 9	14-JUN-91	Toluene	3.000	J	0	ug/kg
1708	067102	16.5 - 18	16-JUN-91	1,1,1-Trichloroethane	4.000	J	0	ug/kg
1708	067112	31.5 - 33	16-JUN-91	Acetone	190.000	J	0	ug/kg
1709	067064	7.5 - 9	06-JUN-91	1,1,1-Trichloroethane	150.000	J	0	ug/kg
1709	067064	7.5 - 9	06-JUN-91	Acetone	13.000	J	0	ug/kg

TABLE E-2B
(Continued)

SAMPLE LOCATION	SAMPLE ID	SAMPLE INTERVALS	SAMPLE DATE	PARAMETER	RESULTS	VAL QUAL	BACKGROUND	UNITS
VOLATILE ORGANICS (Continued)								
1709	067071	13.5 - 15	06-JUN-91	1,1,1-Trichloroethane	50.000	J	0	ug/kg
1709	067071	13.5 - 15	06-JUN-91	Vinyl Acetate	2.000	J	0	ug/kg
1709	067071	13.5 - 15	06-JUN-91	Acetone	10.000	J	0	ug/kg
1710	067029	4.5 - 5	31-MAY-91	4-Methyl-2-pentanone	2.000	J	0	ug/kg
1710	067032	9 - 10.5	31-MAY-91	1,1,1-Trichloroethane	74.000	J	0	ug/kg
1710	067032	9 - 10.5	31-MAY-91	Acetone	75.000	J	0	ug/kg
1710	067047	28.5 - 30	01-JUN-91	4-Methyl-2-pentanone	1.000	J	0	ug/kg
1711	067012	4.5 - 6	29-MAY-91	1,1,1-Trichloroethane	51.000	J	0	ug/kg
1711	067015	9 - 10.5	29-MAY-91	1,1,1-Trichloroethane	35.000	J	0	ug/kg
1711	067015	9 - 10.5	29-MAY-91	Toluene	3.000	J	0	ug/kg
1711	067015	9 - 10.5	29-MAY-91	Carbon disulfide	20.000	J	0	ug/kg
1711	067020	18 - 19.5	29-MAY-91	2-Hexanone	3.000	J	0	ug/kg
1711	067020	18 - 19.5	29-MAY-91	Acetone	68.000	J	0	ug/kg
1849	067604	6 - 7.5	22-FEB-92	1,1,1-Trichloroethane	18.000	J	0	ug/kg
1849	067604	6 - 7.5	22-FEB-92	Toluene	20.000	J	0	ug/kg
1849	067609	13.5 - 15	22-FEB-92	1,1,1-Trichloroethane	170.000	J	0	ug/kg
1849	067609	13.5 - 15	22-FEB-92	Toluene	13.000	J	0	ug/kg
1850	067627	6 - 7.5	23-FEB-92	Styrene	2.000	J	0	ug/kg
1850	067627	6 - 7.5	23-FEB-92	Toluene	38.000	J	0	ug/kg
1850	067632	13.5 - 15	23-FEB-92	1,1,1-Trichloroethane	37.000	J	0	ug/kg
1850	067632	13.5 - 15	23-FEB-92	Toluene	110.000	J	0	ug/kg
SEMIVOLATILE ORGANICS								
1708	067096	7.5 - 9	14-JUN-91	Benzo(a)anthracene	110.000	J	0	ug/kg
1708	067096	7.5 - 9	14-JUN-91	Chrysene	150.000	J	0	ug/kg
1708	067096	7.5 - 9	14-JUN-91	Pyrene	120.000	J	0	ug/kg
1708	067096	7.5 - 9	14-JUN-91	Fluoranthene	94.000	J	0	ug/kg
1708	067096	7.5 - 9	14-JUN-91	Benzo(b)fluoranthene	360.000	J	0	ug/kg
1708	067096	7.5 - 9	14-JUN-91	Benzo(a)pyrene	130.000	J	0	ug/kg
1708	067096	7.5 - 9	14-JUN-91	Benzo(k)fluoranthene	260.000	J	0	ug/kg
1708	067102	16.5 - 18	16-JUN-91	Benzoic acid	97.000	J	0	ug/kg
1710	067047	28.5 - 30	01-JUN-91	bis(2-Ethylhexyl) phthalate	620.000	-	0	ug/kg
1711	067020	18 - 19.5	29-MAY-91	Benzoic acid	150.000	J	0	ug/kg
1849	067604	6 - 7.5	22-FEB-92	2-Methylnaphthalene	50.000	J	0	ug/kg
1849	067609	13.5 - 15	22-FEB-92	2-Methylnaphthalene	79.000	J	0	ug/kg
1849	067609	13.5 - 15	22-FEB-92	Di-n-butyl phthalate	46.000	J	0	ug/kg
1849	067609	13.5 - 15	22-FEB-92	Naphthalene	53.000	J	0	ug/kg
1850	067627	6 - 7.5	23-FEB-92	2-Methylnaphthalene	89.000	J	0	ug/kg
1850	067627	6 - 7.5	23-FEB-92	Naphthalene	53.000	J	0	ug/kg
1850	067627	6 - 7.5	23-FEB-92	Phenanthrene	49.000	J	0	ug/kg
1850	067627	6 - 7.5	23-FEB-92	Anthracene	49.000	J	0	ug/kg
1850	067632	13.5 - 15	23-FEB-92	2-Methylnaphthalene	66.000	J	0	ug/kg
1850	067632	13.5 - 15	23-FEB-92	Phenanthrene	41.000	J	0	ug/kg

TABLE E-2B
(Continued)

SAMPLE LOCATION	SAMPLE ID	SAMPLE INTERVALS	SAMPLE DATE	PARAMETER	RESULTS	VAL QUAL	BACKGROUND	UNITS
PESTICIDES/PCBs								
1710	067047	28.5 - 30	01-JUN-91	Aroclor-1260	390.000	-	0	ug/kg
1711	067020	18 - 19.5	29-MAY-91	Aroclor-1254	210.000	J	0	ug/kg
GENERAL CHEMISTRY								
1849	067604	6 - 7.5	22-FEB-92	Total Organic Carbon	192011.000	-	0	mg/kg
1849	067609	13.5 - 15	22-FEB-92	Total Organic Carbon	186725.000	-	0	mg/kg
1849	067618	28.5 - 30	22-FEB-92	Total Organic Carbon	11500.000	-	0	mg/kg
1850	067627	6 - 7.5	23-FEB-92	Total Organic Carbon	173349.000	-	0	mg/kg
1850	067632	13.5 - 15	23-FEB-92	Total Organic Carbon	56753.000	-	0	mg/kg
1850	067633	15 - 16.5	23-FEB-92	Total Organic Carbon	7840.000	-	0	mg/kg

TABLE E-2C

INACTIVE FLYASH PILE
CONCENTRATIONS OF DETECTED ANALYTES
ABOVE BACKGROUND IN SUBSURFACE SOIL
PHASE II FIELD INVESTIGATION
OPERABLE UNIT 2 REMEDIAL INVESTIGATION
FERNALD ENVIRONMENTAL MANAGEMENT PROJECT

SAMPLE LOCATION	SAMPLE ID	SAMPLE INTERVALS	SAMPLE DATE	PARAMETER	RESULTS	VAL QUAL	BACKGROUND	UNITS
METALS								
11006	113492	22.5 - 24	26-APR-93	Barium	132.000	-	121.064	mg/kg
11006	113492	22.5 - 24	26-APR-93	Chromium	34.800	J	20.953	mg/kg
11006	113492	22.5 - 24	26-APR-93	Copper	249.000	J	20.23	mg/kg
11006	113492	22.5 - 24	26-APR-93	Molybdenum	8.700	-	.27	mg/kg
11006	113492	22.5 - 24	26-APR-93	Mercury	.440	-	.29	mg/kg
11006	113492	22.5 - 24	26-APR-93	Lead	96.600	J	15.78	mg/kg
11006	113492	22.5 - 24	26-APR-93	Nickel	82.300	J	34.747	mg/kg
11006	113492	22.5 - 24	26-APR-93	Silver	8.100	-	0	mg/kg
11006	113492	22.5 - 24	26-APR-93	Zinc	383.000	J	73.158	mg/kg
11006	113492	22.5 - 24	26-APR-93	Sodium	486.000	-	227.947	mg/kg
11006	113492	22.5 - 24	26-APR-93	Potassium	2900.000	-	2007.519	mg/kg
11051	116441	22 - 24	27-MAY-93	Arsenic	49.700	-	9.704	mg/kg
11051	116441	22 - 24	27-MAY-93	Beryllium	1.100	-	.62	mg/kg
11051	116441	22 - 24	27-MAY-93	Chromium	32.100	-	20.953	mg/kg
11051	116441	22 - 24	27-MAY-93	Barium	220.000	-	121.064	mg/kg
11051	116441	22 - 24	27-MAY-93	Cobalt	18.200	-	15.929	mg/kg
11051	116441	22 - 24	27-MAY-93	Copper	258.000	-	20.23	mg/kg
11051	116441	22 - 24	27-MAY-93	Zinc	372.000	-	73.158	mg/kg
11051	116441	22 - 24	27-MAY-93	Sodium	663.000	-	227.947	mg/kg
11051	116441	22 - 24	27-MAY-93	Silver	9.400	-	0	mg/kg
11051	116441	22 - 24	27-MAY-93	Silicon	1250.000	J	1069.496	mg/kg
11051	116441	22 - 24	27-MAY-93	Selenium	.980	J	0	mg/kg
11051	116441	22 - 24	27-MAY-93	Potassium	2060.000	-	2007.519	mg/kg
11051	116441	22 - 24	27-MAY-93	Nickel	65.100	-	34.747	mg/kg
11051	116441	22 - 24	27-MAY-93	Molybdenum	9.200	-	.27	mg/kg
11051	116441	22 - 24	27-MAY-93	Mercury	.510	J	.29	mg/kg
11051	116441	22 - 24	27-MAY-93	Lead	400.000	-	15.78	mg/kg
11052	116427	19 - 21	25-MAY-93	Antimony	2.100	J	0	mg/kg
11052	116427	19 - 21	25-MAY-93	Chromium	22.000	-	20.953	mg/kg
11052	116427	19 - 21	25-MAY-93	Beryllium	1.600	-	.62	mg/kg
11052	116427	19 - 21	25-MAY-93	Potassium	2050.000	-	2007.519	mg/kg
11052	116427	19 - 21	25-MAY-93	Nickel	54.400	-	34.747	mg/kg
11052	116427	19 - 21	25-MAY-93	Zinc	324.000	-	73.158	mg/kg
11052	116427	19 - 21	25-MAY-93	Vanadium	41.300	-	38.088	mg/kg
11052	116427	19 - 21	25-MAY-93	Silver	7.900	-	0	mg/kg
11052	116427	19 - 21	25-MAY-93	Silicon	1090.000	-	1069.496	mg/kg

TABLE E-2C
(Continued)

SAMPLE LOCATION	SAMPLE ID	SAMPLE INTERVALS	SAMPLE DATE	PARAMETER	RESULTS	VAL QUAL	BACKGROUND	UNITS
METALS (Continued)								
11052	116427	19 - 21	25-MAY-93	Selenium	1.800	-	0	mg/kg
11052	116427	19 - 21	25-MAY-93	Molybdenum	7.400	-	.27	mg/kg
11052	116427	19 - 21	25-MAY-93	Mercury	.460	-	.29	mg/kg
11052	116427	19 - 21	25-MAY-93	Lead	193.000	-	15.78	mg/kg
11052	116427	19 - 21	25-MAY-93	Copper	92.300	-	20.23	mg/kg
11052	116427	19 - 21	25-MAY-93	Barium	222.000	-	121.064	mg/kg
11052	116427	19 - 21	25-MAY-93	Arsenic	35.500	-	9.704	mg/kg
1994	116264	2 - 3.5	12-MAY-93	Arsenic	12.100	-	9.704	mg/kg
1994	116264	2 - 3.5	12-MAY-93	Cyanide	.840	-	.17	mg/kg
1994	116264	2 - 3.5	12-MAY-93	Selenium	11.100	-	0	mg/kg
1994	116264	2 - 3.5	12-MAY-93	Molybdenum	6.900	-	.27	mg/kg
1994	116264	2 - 3.5	12-MAY-93	Copper	31.500	-	20.23	mg/kg
1994	116264	2 - 3.5	12-MAY-93	Beryllium	1.400	-	.62	mg/kg
1994	116264	2 - 3.5	12-MAY-93	Barium	228.000	-	121.064	mg/kg
1994	116283	14 - 15.5	12-MAY-93	Antimony	5.500	J	0	mg/kg
1994	116283	14 - 15.5	12-MAY-93	Arsenic	25.100	-	9.704	mg/kg
1994	116283	14 - 15.5	12-MAY-93	Copper	35.700	-	20.23	mg/kg
1994	116283	14 - 15.5	12-MAY-93	Cyanide	.830	-	.17	mg/kg
1994	116283	14 - 15.5	12-MAY-93	Beryllium	1.800	-	.62	mg/kg
1994	116283	14 - 15.5	12-MAY-93	Sodium	334.000	-	227.947	mg/kg
1994	116283	14 - 15.5	12-MAY-93	Selenium	5.100	-	0	mg/kg
1994	116283	14 - 15.5	12-MAY-93	Barium	612.000	-	121.064	mg/kg
1994	116301	26 - 27.5	13-MAY-93	Molybdenum	5.000	-	.27	mg/kg
1994	116301	26 - 27.5	13-MAY-93	Silver	4.700	-	0	mg/kg
1994	116312	36 - 37.5	13-MAY-93	Magnesium	55900.000	-	43052.339	mg/kg
1994	116312	36 - 37.5	13-MAY-93	Silver	2.200	J	0	mg/kg
1994	116312	36 - 37.5	13-MAY-93	Molybdenum	2.900	J	.27	mg/kg
1995	116080	2 - 3.5	01-MAY-93	Beryllium	1.600	-	.62	mg/kg
1995	116080	2 - 3.5	01-MAY-93	Molybdenum	.720	-	.27	mg/kg
1995	116090	8 - 9	01-MAY-93	Arsenic	81.800	J	9.704	mg/kg
1995	116090	8 - 9	01-MAY-93	Barium	357.000	-	121.064	mg/kg
1995	116090	8 - 9	01-MAY-93	Cyanide	.250	-	.17	mg/kg
1995	116090	8 - 9	01-MAY-93	Vanadium	53.200	J	38.088	mg/kg
1995	116090	8 - 9	01-MAY-93	Thallium	2.100	-	.49	mg/kg
1995	116090	8 - 9	01-MAY-93	Sodium	497.000	J	227.947	mg/kg
1995	116090	8 - 9	01-MAY-93	Selenium	4.100	J	0	mg/kg
1995	116090	8 - 9	01-MAY-93	Molybdenum	8.000	-	.27	mg/kg
1995	116090	8 - 9	01-MAY-93	Copper	41.200	-	20.23	mg/kg
1995	116090	8 - 9	01-MAY-93	Beryllium	8.700	-	.62	mg/kg
1995	116172	30 - 31.5	02-MAY-93	Beryllium	1.400	-	.62	mg/kg
1995	116172	30 - 31.5	02-MAY-93	Copper	22.600	-	20.23	mg/kg
1995	116172	30 - 31.5	02-MAY-93	Cadmium	1.100	-	.91	mg/kg
1995	116172	30 - 31.5	02-MAY-93	Lead	25.900	J	15.78	mg/kg

TABLE E-2C
(Continued)

SAMPLE LOCATION	SAMPLE ID	SAMPLE INTERVALS	SAMPLE DATE	PARAMETER	RESULTS	VAL QUAL	BACKGROUND	UNITS
METALS (Continued)								
1995	116172	30 - 31.5	02-MAY-93	Molybdenum	1.400	-	.27	mg/kg
1995	116172	30 - 31.5	02-MAY-93	Silver	.490	-	0	mg/kg
1995	116172	30 - 31.5	02-MAY-93	Silicon	1080.000	-	1069.496	mg/kg
1995	116172	30 - 31.5	02-MAY-93	Manganese	1200.000	-	1045.407	mg/kg
1996	112077	8 - 9.5	29-APR-93	Arsenic	14.500	J	9.704	mg/kg
1996	112077	8 - 9.5	29-APR-93	Barium	639.000	J	121.064	mg/kg
1996	112077	8 - 9.5	29-APR-93	Cyanide	.490	J	.17	mg/kg
1996	112077	8 - 9.5	29-APR-93	Thallium	.570	-	.49	mg/kg
1996	112077	8 - 9.5	29-APR-93	Sodium	297.000	-	227.947	mg/kg
1996	112077	8 - 9.5	29-APR-93	Selenium	2.300	J	0	mg/kg
1996	112077	8 - 9.5	29-APR-93	Beryllium	3.300	-	.62	mg/kg
1996	112077	8 - 9.5	29-APR-93	Copper	39.600	-	20.23	mg/kg
1996	112084	14 - 15	29-APR-93	Arsenic	26.000	J	9.704	mg/kg
1996	112084	14 - 15	29-APR-93	Barium	727.000	J	121.064	mg/kg
1996	112084	14 - 15	29-APR-93	Cyanide	.710	J	.17	mg/kg
1996	112084	14 - 15	29-APR-93	Thallium	.730	-	.49	mg/kg
1996	112084	14 - 15	29-APR-93	Sodium	382.000	-	227.947	mg/kg
1996	112084	14 - 15	29-APR-93	Selenium	1.900	J	0	mg/kg
1996	112084	14 - 15	29-APR-93	Copper	34.300	-	20.23	mg/kg
1996	112084	14 - 15	29-APR-93	Beryllium	4.200	-	.62	mg/kg
1996	116070	20 - 21.5	29-APR-93	Beryllium	.930	-	.62	mg/kg
1996	116070	20 - 21.5	29-APR-93	Molybdenum	1.400	-	.27	mg/kg
1997	116177	- 1.5	05-MAY-93	Beryllium	.890	-	.62	mg/kg
1997	116177	- 1.5	05-MAY-93	Copper	21.400	J	20.23	mg/kg
1997	116177	- 1.5	05-MAY-93	Lead	16.500	J	15.78	mg/kg
1997	116192	10 - 11.5	05-MAY-93	Arsenic	65.700	-	9.704	mg/kg
1997	116192	10 - 11.5	05-MAY-93	Cyanide	.350	-	.17	mg/kg
1997	116192	10 - 11.5	05-MAY-93	Thallium	.880	-	.49	mg/kg
1997	116192	10 - 11.5	05-MAY-93	Sodium	496.000	-	227.947	mg/kg
1997	116192	10 - 11.5	05-MAY-93	Selenium	2.900	-	0	mg/kg
1997	116192	10 - 11.5	05-MAY-93	Mercury	1.300	-	.29	mg/kg
1997	116192	10 - 11.5	05-MAY-93	Barium	1080.000	J	121.064	mg/kg
1997	116192	10 - 11.5	05-MAY-93	Beryllium	5.400	-	.62	mg/kg
1997	116192	10 - 11.5	05-MAY-93	Copper	38.600	J	20.23	mg/kg
1997	116252	34 - 35.5	07-MAY-93	Beryllium	.840	-	.62	mg/kg
1997	116252	34 - 35.5	07-MAY-93	Cadmium	1.200	-	.91	mg/kg
1997	116252	34 - 35.5	07-MAY-93	Cyanide	.250	J	.17	mg/kg
1997	116252	34 - 35.5	07-MAY-93	Sodium	233.000	-	227.947	mg/kg
1997	116257	38 - 39	07-MAY-93	Magnesium	48100.000	J	43052.339	mg/kg
1998	112045	2 - 3.5	28-APR-93	Arsenic	65.400	J	9.704	mg/kg
1998	112045	2 - 3.5	28-APR-93	Cyanide	.550	-	.17	mg/kg
1998	112045	2 - 3.5	28-APR-93	Vanadium	49.100	J	38.088	mg/kg
1998	112045	2 - 3.5	28-APR-93	Thallium	3.600	-	.49	mg/kg

TABLE E-2C
(Continued)

SAMPLE LOCATION	SAMPLE ID	SAMPLE INTERVALS	SAMPLE DATE	PARAMETER	RESULTS	VAL QUAL	BACKGROUND	UNITS
METALS (Continued)								
1998	112045	2 - 3.5	28-APR-93	Silver	.760	-	0	mg/kg
1998	112045	2 - 3.5	28-APR-93	Selenium	5.400	J	0	mg/kg
1998	112045	2 - 3.5	28-APR-93	Molybdenum	5.700	-	.27	mg/kg
1998	112045	2 - 3.5	28-APR-93	Lead	17.700	J	15.78	mg/kg
1998	112045	2 - 3.5	28-APR-93	Copper	35.800	-	20.23	mg/kg
1998	112045	2 - 3.5	28-APR-93	Barium	621.000	-	121.064	mg/kg
1998	112045	2 - 3.5	28-APR-93	Beryllium	6.900	-	.62	mg/kg
1998	112054	8 - 9.5	28-APR-93	Arsenic	10.900	J	9.704	mg/kg
1998	112054	8 - 9.5	28-APR-93	Molybdenum	2.800	-	.27	mg/kg
1998	112054	8 - 9.5	28-APR-93	Copper	23.000	-	20.23	mg/kg
1998	112054	8 - 9.5	28-APR-93	Cadmium	.960	-	.91	mg/kg
1998	112054	8 - 9.5	28-APR-93	Silver	.500	-	0	mg/kg
1998	112054	8 - 9.5	28-APR-93	Beryllium	1.700	-	.62	mg/kg
1998	112057	10 - 11.5	28-APR-93	Beryllium	1.500	-	.62	mg/kg
1998	112057	10 - 11.5	28-APR-93	Calcium	219000.000	J	150000	mg/kg
1998	112057	10 - 11.5	28-APR-93	Molybdenum	1.600	-	.27	mg/kg
1998	112057	10 - 11.5	28-APR-93	Magnesium	51400.000	-	43052.339	mg/kg
1998	112065	17 - 18.5	28-APR-93	Beryllium	1.300	-	.62	mg/kg
1998	112065	17 - 18.5	28-APR-93	Cadmium	1.200	-	.91	mg/kg
1998	112065	17 - 18.5	28-APR-93	Lead	18.300	J	15.78	mg/kg
1998	112065	17 - 18.5	28-APR-93	Molybdenum	1.400	-	.27	mg/kg
RADIONUCLIDES								
11006	113492	22.5 - 24	26-APR-93	GROSS ALPHA	1132.000	J	0	pCi/g
11006	113492	22.5 - 24	26-APR-93	RA-226	9.740	-	1.47	pCi/g
11006	113492	22.5 - 24	26-APR-93	TH-TOTAL	10.300	-	9.47	mg/kg
11006	113492	22.5 - 24	26-APR-93	U-235/236	49.100	-	.142	pCi/g
11006	113492	22.5 - 24	26-APR-93	U-TOTAL	1714.000	-	2.54	mg/kg
11006	113492	22.5 - 24	26-APR-93	U-238	803.000	-	1.122	pCi/g
11006	113492	22.5 - 24	26-APR-93	U-234	771.000	-	1.034	pCi/g
11006	113492	22.5 - 24	26-APR-93	GROSS BETA	825.000	J	0	pCi/g
11006	113492	22.5 - 24	26-APR-93	NP-237	.118	N	0	pCi/g
11051	116438	21 - 22	27-MAY-93	GROSS ALPHA	2030.000	J	0	pCi/g
11051	116438	21 - 22	27-MAY-93	SR-90	.860	J	.56	pCi/g
11051	116438	21 - 22	27-MAY-93	RA-228	3.040	-	1.325	pCi/g
11051	116438	21 - 22	27-MAY-93	U-TOTAL	3580.000	-	2.54	mg/kg
11051	116438	21 - 22	27-MAY-93	U-238	1570.000	-	1.122	pCi/g
11051	116438	21 - 22	27-MAY-93	U-235/236	68.800	-	.142	pCi/g
11051	116438	21 - 22	27-MAY-93	U-234	1380.000	-	1.034	pCi/g
11051	116438	21 - 22	27-MAY-93	TH-TOTAL	23.100	-	9.47	mg/kg
11051	116438	21 - 22	27-MAY-93	TH-232	2.540	-	1.269	pCi/g
11051	116438	21 - 22	27-MAY-93	TH-230	121.000	-	1.897	pCi/g
11051	116438	21 - 22	27-MAY-93	TH-228	2.440	-	1.341	pCi/g

TABLE E-2C
(Continued)

SAMPLE LOCATION	SAMPLE ID	SAMPLE INTERVALS	SAMPLE DATE	PARAMETER	RESULTS	VAL QUAL	BACKGROUND	UNITS
RADIONUCLIDES (Continued)								
11051	116438	21 - 22	27-MAY-93	RA-226	37.800	-	1.47	pCi/g
11051	116438	21 - 22	27-MAY-93	GROSS BETA	1810.000	-	0	pCi/g
11051	116438	21 - 22	27-MAY-93	NP-237	37.300	N	0	pCi/g
11051	116438	21 - 22	27-MAY-93	PU-239/240	1.770	J	0	pCi/g
11051	116438	21 - 22	27-MAY-93	PU-238	1.850	J	0	pCi/g
11051	116441	22 - 24	27-MAY-93	GROSS ALPHA	1490.000	J	0	pCi/g
11051	116441	22 - 24	27-MAY-93	GROSS BETA	1210.000	-	0	pCi/g
11051	116441	22 - 24	27-MAY-93	U-TOTAL	2280.000	-	2.54	mg/kg
11051	116441	22 - 24	27-MAY-93	U-238	763.000	-	1.122	pCi/g
11051	116441	22 - 24	27-MAY-93	U-235/236	35.500	-	.142	pCi/g
11051	116441	22 - 24	27-MAY-93	U-234	726.000	-	1.034	pCi/g
11051	116441	22 - 24	27-MAY-93	TH-TOTAL	16.100	-	9.47	mg/kg
11051	116441	22 - 24	27-MAY-93	TH-232	1.770	-	1.269	pCi/g
11051	116441	22 - 24	27-MAY-93	TH-230	74.900	-	1.897	pCi/g
11051	116441	22 - 24	27-MAY-93	TH-228	1.380	-	1.341	pCi/g
11051	116441	22 - 24	27-MAY-93	RA-228	2.290	-	1.325	pCi/g
11051	116441	22 - 24	27-MAY-93	RA-226	42.300	-	1.47	pCi/g
11051	116441	22 - 24	27-MAY-93	PU-239/240	.380	J	0	pCi/g
11051	116441	22 - 24	27-MAY-93	PU-238	.430	J	0	pCi/g
11051	116441	22 - 24	27-MAY-93	NP-237	1.910	N	0	pCi/g
11052	116427	19 - 21	25-MAY-93	GROSS ALPHA	214.000	J	0	pCi/g
11052	116427	19 - 21	25-MAY-93	TH-230	8.020	-	1.897	pCi/g
11052	116427	19 - 21	25-MAY-93	TH-228	1.410	-	1.341	pCi/g
11052	116427	19 - 21	25-MAY-93	U-TOTAL	294.000	-	2.54	mg/kg
11052	116427	19 - 21	25-MAY-93	U-238	115.800	J	1.122	pCi/g
11052	116427	19 - 21	25-MAY-93	U-235/236	5.760	J	.142	pCi/g
11052	116427	19 - 21	25-MAY-93	U-234	106.500	J	1.034	pCi/g
11052	116427	19 - 21	25-MAY-93	TH-TOTAL	12.300	-	9.47	mg/kg
11052	116427	19 - 21	25-MAY-93	TH-232	1.350	-	1.269	pCi/g
11052	116427	19 - 21	25-MAY-93	RA-228	1.600	-	1.325	pCi/g
11052	116427	19 - 21	25-MAY-93	RA-226	4.060	-	1.47	pCi/g
11052	116427	19 - 21	25-MAY-93	PU-239/240	.038	J	0	pCi/g
11052	116427	19 - 21	25-MAY-93	GROSS BETA	166.000	J	0	pCi/g
11052	116427	19 - 21	25-MAY-93	NP-237	.310	N	0	pCi/g
1994	116264	2 - 3.5	12-MAY-93	GROSS ALPHA	43.600	J	0	pCi/g
1994	116264	2 - 3.5	12-MAY-93	GROSS BETA	39.400	J	0	pCi/g
1994	116264	2 - 3.5	12-MAY-93	U-TOTAL	12.800	-	2.54	mg/kg
1994	116264	2 - 3.5	12-MAY-93	U-238	3.860	-	1.122	pCi/g
1994	116264	2 - 3.5	12-MAY-93	U-235/236	.162	J	.142	pCi/g
1994	116264	2 - 3.5	12-MAY-93	U-234	3.950	-	1.034	pCi/g
1994	116264	2 - 3.5	12-MAY-93	TH-TOTAL	24.100	-	9.47	mg/kg
1994	116264	2 - 3.5	12-MAY-93	TH-232	2.650	-	1.269	pCi/g
1994	116264	2 - 3.5	12-MAY-93	TH-230	2.950	-	1.897	pCi/g

TABLE E-2C
(Continued)

SAMPLE LOCATION	SAMPLE ID	SAMPLE INTERVALS	SAMPLE DATE	PARAMETER	RESULTS	VAL QUAL	BACKGROUND	UNITS
RADIONUCLIDES (Continued)								
1994	116264	2 - 3.5	12-MAY-93	TH-228	3.080	-	1.341	pCi/g
1994	116264	2 - 3.5	12-MAY-93	RA-228	2.970	-	1.325	pCi/g
1994	116264	2 - 3.5	12-MAY-93	RA-226	2.960	-	1.47	pCi/g
1994	116264	2 - 3.5	12-MAY-93	PU-238	.080	J	0	pCi/g
1994	116283	14 - 15.5	12-MAY-93	GROSS ALPHA	36.700	J	0	pCi/g
1994	116283	14 - 15.5	12-MAY-93	RA-226	2.800	-	1.47	pCi/g
1994	116283	14 - 15.5	12-MAY-93	GROSS BETA	35.100	J	0	pCi/g
1994	116283	14 - 15.5	12-MAY-93	RA-228	2.650	-	1.325	pCi/g
1994	116283	14 - 15.5	12-MAY-93	U-TOTAL	13.300	-	2.54	mg/kg
1994	116283	14 - 15.5	12-MAY-93	U-238	1.540	-	1.122	pCi/g
1994	116283	14 - 15.5	12-MAY-93	U-234	1.330	-	1.034	pCi/g
1994	116283	14 - 15.5	12-MAY-93	TH-TOTAL	23.100	-	9.47	mg/kg
1994	116283	14 - 15.5	12-MAY-93	TH-232	2.540	-	1.269	pCi/g
1994	116283	14 - 15.5	12-MAY-93	TH-230	2.910	-	1.897	pCi/g
1994	116283	14 - 15.5	12-MAY-93	TH-228	2.620	-	1.341	pCi/g
1994	116301	26 - 27.5	13-MAY-93	GROSS ALPHA	71.400	J	0	pCi/g
1994	116301	26 - 27.5	13-MAY-93	PU-238	.082	J	0	pCi/g
1994	116301	26 - 27.5	13-MAY-93	U-235/236	1.050	-	.142	pCi/g
1994	116301	26 - 27.5	13-MAY-93	U-234	17.900	-	1.034	pCi/g
1994	116301	26 - 27.5	13-MAY-93	U-TOTAL	50.700	-	2.54	mg/kg
1994	116301	26 - 27.5	13-MAY-93	U-238	20.700	-	1.122	pCi/g
1994	116301	26 - 27.5	13-MAY-93	TH-TOTAL	10.400	-	9.47	mg/kg
1994	116301	26 - 27.5	13-MAY-93	NP-237	.228	N	0	pCi/g
1994	116301	26 - 27.5	13-MAY-93	TH-230	5.190	-	1.897	pCi/g
1994	116301	26 - 27.5	13-MAY-93	RA-228	1.800	-	1.325	pCi/g
1994	116301	26 - 27.5	13-MAY-93	RA-226	3.150	-	1.47	pCi/g
1994	116301	26 - 27.5	13-MAY-93	GROSS BETA	66.900	J	0	pCi/g
1994	116312	36 - 37.5	13-MAY-93	GROSS ALPHA	12.800	J	0	pCi/g
1994	116312	36 - 37.5	13-MAY-93	U-TOTAL	3.440	J	2.54	mg/kg
1994	116312	36 - 37.5	13-MAY-93	PU-239/240	.035	J	0	pCi/g
1994	116312	36 - 37.5	13-MAY-93	PU-238	.122	J	0	pCi/g
1994	116312	36 - 37.5	13-MAY-93	GROSS BETA	12.900	J	0	pCi/g
1995	116080	2 - 3.5	01-MAY-93	CS-137	.079	J	0	pCi/g
1995	116080	2 - 3.5	01-MAY-93	GROSS BETA	118.040	-	0	pCi/g
1995	116080	2 - 3.5	01-MAY-93	GROSS ALPHA	159.910	-	0	pCi/g
1995	116080	2 - 3.5	01-MAY-93	PU-239/240	.103	J	0	pCi/g
1995	116080	2 - 3.5	01-MAY-93	RA-226	1.710	-	1.47	pCi/g
1995	116080	2 - 3.5	01-MAY-93	U-TOTAL	187.000	-	2.54	mg/kg
1995	116080	2 - 3.5	01-MAY-93	U-238	62.700	-	1.122	pCi/g
1995	116080	2 - 3.5	01-MAY-93	U-235/236	2.910	-	.142	pCi/g
1995	116080	2 - 3.5	01-MAY-93	U-234	61.900	-	1.034	pCi/g
1995	116080	2 - 3.5	01-MAY-93	TH-TOTAL	22.900	-	9.47	mg/kg
1995	116080	2 - 3.5	01-MAY-93	TH-232	2.510	-	1.269	pCi/g

TABLE E-2C
(Continued)

SAMPLE LOCATION	SAMPLE ID	SAMPLE INTERVALS	SAMPLE DATE	PARAMETER	RESULTS	VAL QUAL	BACKGROUND	UNITS
RADIONUCLIDES (Continued)								
1995	116080	2 - 3.5	01-MAY-93	TH-230	5.170	-	1.897	pCi/g
1995	116080	2 - 3.5	01-MAY-93	TH-228	2.610	-	1.341	pCi/g
1995	116080	2 - 3.5	01-MAY-93	RA-228	2.720	-	1.325	pCi/g
1995	116080	2 - 3.5	01-MAY-93	PU-238	.219	J	0	pCi/g
1995	116080	2 - 3.5	01-MAY-93	NP-237	.502	N	0	pCi/g
1995	116090	8 - 9	01-MAY-93	GROSS ALPHA	41.980	-	0	pCi/g
1995	116090	8 - 9	01-MAY-93	TH-TOTAL	17.700	J	9.47	mg/kg
1995	116090	8 - 9	01-MAY-93	TH-232	1.940	J	1.269	pCi/g
1995	116090	8 - 9	01-MAY-93	U-TOTAL	8.610	-	2.54	mg/kg
1995	116090	8 - 9	01-MAY-93	U-238	2.600	-	1.122	pCi/g
1995	116090	8 - 9	01-MAY-93	U-234	2.630	-	1.034	pCi/g
1995	116090	8 - 9	01-MAY-93	TH-230	4.140	J	1.897	pCi/g
1995	116090	8 - 9	01-MAY-93	TH-228	2.260	J	1.341	pCi/g
1995	116090	8 - 9	01-MAY-93	RA-228	2.590	-	1.325	pCi/g
1995	116090	8 - 9	01-MAY-93	RA-226	3.180	-	1.47	pCi/g
1995	116090	8 - 9	01-MAY-93	GROSS BETA	40.860	-	0	pCi/g
1995	116172	30 - 31.5	02-MAY-93	GROSS ALPHA	10.200	-	0	pCi/g
1995	116172	30 - 31.5	02-MAY-93	GROSS BETA	15.830	-	0	pCi/g
1995	116172	30 - 31.5	02-MAY-93	U-TOTAL	3.410	-	2.54	mg/kg
1995	116172	30 - 31.5	02-MAY-93	PU-239/240	.165	J	0	pCi/g
1995	116172	30 - 31.5	02-MAY-93	PU-238	.031	J	0	pCi/g
1995	116172	30 - 31.5	02-MAY-93	NP-237	.137	N	0	pCi/g
1996	112073	2 - 4	29-APR-93	CS-137	.104	J	0	pCi/g
1996	112073	2 - 4	29-APR-93	GROSS BETA	56.470	-	0	pCi/g
1996	112073	2 - 4	29-APR-93	RA-228	2.340	-	1.325	pCi/g
1996	112073	2 - 4	29-APR-93	TH-230	4.070	-	1.897	pCi/g
1996	112073	2 - 4	29-APR-93	TH-TOTAL	17.300	-	9.47	mg/kg
1996	112073	2 - 4	29-APR-93	TH-232	1.900	-	1.269	pCi/g
1996	112073	2 - 4	29-APR-93	U-TOTAL	48.300	-	2.54	mg/kg
1996	112073	2 - 4	29-APR-93	U-238	14.560	-	1.122	pCi/g
1996	112073	2 - 4	29-APR-93	U-235/236	.740	-	.142	pCi/g
1996	112073	2 - 4	29-APR-93	U-234	14.550	-	1.034	pCi/g
1996	112073	2 - 4	29-APR-93	TH-228	2.090	-	1.341	pCi/g
1996	112073	2 - 4	29-APR-93	RA-226	2.860	-	1.47	pCi/g
1996	112073	2 - 4	29-APR-93	PU-239/240	.130	J	0	pCi/g
1996	112073	2 - 4	29-APR-93	PU-238	.260	J	0	pCi/g
1996	112073	2 - 4	29-APR-93	NP-237	.490	N	0	pCi/g
1996	112073	2 - 4	29-APR-93	GROSS ALPHA	58.630	-	0	pCi/g
1996	112077	8 - 9.5	29-APR-93	GROSS ALPHA	46.600	J	0	pCi/g
1996	112077	8 - 9.5	29-APR-93	U-TOTAL	38.500	-	2.54	mg/kg
1996	112077	8 - 9.5	29-APR-93	U-238	9.900	J	1.122	pCi/g
1996	112077	8 - 9.5	29-APR-93	U-235/236	.730	J	.142	pCi/g
1996	112077	8 - 9.5	29-APR-93	U-234	9.480	J	1.034	pCi/g

TABLE E-2C
(Continued)

SAMPLE LOCATION	SAMPLE ID	SAMPLE INTERVALS	SAMPLE DATE	PARAMETER	RESULTS	VAL QUAL	BACKGROUND	UNITS
RADIONUCLIDES (Continued)								
1996	112077	8 - 9.5	29-APR-93	TH-TOTAL	16.700	-	9.47	mg/kg
1996	112077	8 - 9.5	29-APR-93	TH-232	1.840	-	1.269	pCi/g
1996	112077	8 - 9.5	29-APR-93	TH-230	8.800	-	1.897	pCi/g
1996	112077	8 - 9.5	29-APR-93	TH-228	2.240	-	1.341	pCi/g
1996	112077	8 - 9.5	29-APR-93	RA-228	2.360	-	1.325	pCi/g
1996	112077	8 - 9.5	29-APR-93	RA-226	2.780	J	1.47	pCi/g
1996	112077	8 - 9.5	29-APR-93	PU-239/240	.120	J	0	pCi/g
1996	112077	8 - 9.5	29-APR-93	PU-238	.200	J	0	pCi/g
1996	112077	8 - 9.5	29-APR-93	NP-237	.480	N	0	pCi/g
1996	112077	8 - 9.5	29-APR-93	GROSS BETA	31.000	J	0	pCi/g
1996	112082	13 - 13.5	29-APR-93	GROSS ALPHA	27.200	J	0	pCi/g
1996	112082	13 - 13.5	29-APR-93	U-TOTAL	19.700	J	2.54	mg/kg
1996	112082	13 - 13.5	29-APR-93	U-238	2.840	J	1.122	pCi/g
1996	112082	13 - 13.5	29-APR-93	U-235/236	.160	J	.142	pCi/g
1996	112082	13 - 13.5	29-APR-93	U-234	2.650	J	1.034	pCi/g
1996	112082	13 - 13.5	29-APR-93	TH-TOTAL	23.700	-	9.47	mg/kg
1996	112082	13 - 13.5	29-APR-93	TH-232	2.600	-	1.269	pCi/g
1996	112082	13 - 13.5	29-APR-93	TH-230	4.700	-	1.897	pCi/g
1996	112082	13 - 13.5	29-APR-93	TH-228	2.650	-	1.341	pCi/g
1996	112082	13 - 13.5	29-APR-93	RA-228	1.960	-	1.325	pCi/g
1996	112082	13 - 13.5	29-APR-93	PU-238	.310	J	0	pCi/g
1996	112082	13 - 13.5	29-APR-93	GROSS BETA	30.700	J	0	pCi/g
1996	112082	13 - 13.5	29-APR-93	RA-226	2.540	J	1.47	pCi/g
1996	112082	13 - 13.5	29-APR-93	PU-239/240	.160	J	0	pCi/g
1996	112082	13 - 13.5	29-APR-93	NP-237	.270	N	0	pCi/g
1996	116070	20 - 21.5	29-APR-93	GROSS ALPHA	17.780	-	0	pCi/g
1996	116070	20 - 21.5	29-APR-93	U-TOTAL	3.620	J	2.54	mg/kg
1996	116070	20 - 21.5	29-APR-93	TH-230	2.030	-	1.897	pCi/g
1996	116070	20 - 21.5	29-APR-93	NP-237	.086	N	0	pCi/g
1996	116070	20 - 21.5	29-APR-93	GROSS BETA	12.410	-	0	pCi/g
1997	116177	- 1.5	05-MAY-93	CS-137	.550	J	0	pCi/g
1997	116177	- 1.5	05-MAY-93	GROSS BETA	54.400	J	0	pCi/g
1997	116177	- 1.5	05-MAY-93	NP-237	.300	N	0	pCi/g
1997	116177	- 1.5	05-MAY-93	PU-238	.060	J	0	pCi/g
1997	116177	- 1.5	05-MAY-93	PU-239/240	.090	J	0	pCi/g
1997	116177	- 1.5	05-MAY-93	GROSS ALPHA	38.700	J	0	pCi/g
1997	116177	- 1.5	05-MAY-93	U-TOTAL	69.800	J	2.54	mg/kg
1997	116177	- 1.5	05-MAY-93	U-238	23.700	J	1.122	pCi/g
1997	116177	- 1.5	05-MAY-93	U-235/236	1.280	J	.142	pCi/g
1997	116177	- 1.5	05-MAY-93	U-234	23.400	J	1.034	pCi/g
1997	116192	10 - 11.5	05-MAY-93	GROSS ALPHA	42.100	J	0	pCi/g
1997	116192	10 - 11.5	05-MAY-93	PU-238	.270	J	0	pCi/g
1997	116192	10 - 11.5	05-MAY-93	PU-239/240	.040	J	0	pCi/g

TABLE E-2C
(Continued)

SAMPLE LOCATION	SAMPLE ID	SAMPLE INTERVALS	SAMPLE DATE	PARAMETER	RESULTS	VAL QUAL	BACKGROUND	UNITS
RADIONUCLIDES (Continued)								
1997	116192	10 - 11.5	05-MAY-93	RA-228	2.220	-	1.325	pCi/g
1997	116192	10 - 11.5	05-MAY-93	TH-230	3.050	J	1.897	pCi/g
1997	116192	10 - 11.5	05-MAY-93	U-235/236	.210	J	.142	pCi/g
1997	116192	10 - 11.5	05-MAY-93	TH-TOTAL	21.300	J	9.47	mg/kg
1997	116192	10 - 11.5	05-MAY-93	U-TOTAL	10.900	J	2.54	mg/kg
1997	116192	10 - 11.5	05-MAY-93	U-238	4.190	J	1.122	pCi/g
1997	116192	10 - 11.5	05-MAY-93	U-234	3.910	J	1.034	pCi/g
1997	116192	10 - 11.5	05-MAY-93	TH-232	2.340	J	1.269	pCi/g
1997	116192	10 - 11.5	05-MAY-93	TH-228	2.360	J	1.341	pCi/g
1997	116192	10 - 11.5	05-MAY-93	RA-226	2.850	-	1.47	pCi/g
1997	116192	10 - 11.5	05-MAY-93	NP-237	.160	N	0	pCi/g
1997	116192	10 - 11.5	05-MAY-93	GROSS BETA	30.800	J	0	pCi/g
1997	116243	28.5 - 30	06-MAY-93	GROSS ALPHA	18.300	J	0	pCi/g
1997	116243	28.5 - 30	06-MAY-93	U-TOTAL	5.620	J	2.54	mg/kg
1997	116243	28.5 - 30	06-MAY-93	PU-239/240	.060	J	0	pCi/g
1997	116243	28.5 - 30	06-MAY-93	PU-238	.040	J	0	pCi/g
1997	116243	28.5 - 30	06-MAY-93	NP-237	.180	N	0	pCi/g
1997	116243	28.5 - 30	06-MAY-93	GROSS BETA	32.900	J	0	pCi/g
1997	116252	34 - 35.5	07-MAY-93	GROSS ALPHA	9.630	J	0	pCi/g
1997	116252	34 - 35.5	07-MAY-93	GROSS BETA	22.700	J	0	pCi/g
1997	116252	34 - 35.5	07-MAY-93	NP-237	.260	N	0	pCi/g
1997	116252	34 - 35.5	07-MAY-93	PU-239/240	.050	J	0	pCi/g
1997	116252	34 - 35.5	07-MAY-93	U-TOTAL	2.620	J	2.54	mg/kg
1997	116252	34 - 35.5	07-MAY-93	PU-238	.040	J	0	pCi/g
1997	116257	38 - 39	07-MAY-93	GROSS ALPHA	9.890	J	0	pCi/g
1997	116257	38 - 39	07-MAY-93	GROSS BETA	14.500	J	0	pCi/g
1997	116257	38 - 39	07-MAY-93	U-234	1.290	-	1.034	pCi/g
1997	116257	38 - 39	07-MAY-93	U-TOTAL	5.860	-	2.54	mg/kg
1997	116257	38 - 39	07-MAY-93	U-238	1.440	-	1.122	pCi/g
1997	116257	38 - 39	07-MAY-93	PU-239/240	.040	J	0	pCi/g
1997	116257	38 - 39	07-MAY-93	PU-238	.040	J	0	pCi/g
1997	116257	38 - 39	07-MAY-93	NP-237	.180	N	0	pCi/g
1998	112045	2 - 3.5	28-APR-93	GROSS ALPHA	40.000	-	0	pCi/g
1998	112045	2 - 3.5	28-APR-93	U-TOTAL	14.300	-	2.54	mg/kg
1998	112045	2 - 3.5	28-APR-93	U-238	4.460	-	1.122	pCi/g
1998	112045	2 - 3.5	28-APR-93	U-235/236	.190	J	.142	pCi/g
1998	112045	2 - 3.5	28-APR-93	U-234	4.230	-	1.034	pCi/g
1998	112045	2 - 3.5	28-APR-93	RA-228	2.510	-	1.325	pCi/g
1998	112045	2 - 3.5	28-APR-93	RA-226	3.440	-	1.47	pCi/g
1998	112045	2 - 3.5	28-APR-93	PU-239/240	.069	J	0	pCi/g
1998	112045	2 - 3.5	28-APR-93	PU-238	.115	J	0	pCi/g
1998	112045	2 - 3.5	28-APR-93	NP-237	.113	N	0	pCi/g
1998	112045	2 - 3.5	28-APR-93	GROSS BETA	35.100	-	0	pCi/g

TABLE E-2C
(Continued)

SAMPLE LOCATION	SAMPLE ID	SAMPLE INTERVALS	SAMPLE DATE	PARAMETER	RESULTS	VAL QUAL	BACKGROUND	UNITS
RADIONUCLIDES (Continued)								
1998	112054	8 - 9.5	28-APR-93	CS-137	.088	J	0	pCi/g
1998	112054	8 - 9.5	28-APR-93	U-TOTAL	14.900	-	2.54	mg/kg
1998	112054	8 - 9.5	28-APR-93	U-238	4.780	-	1.122	pCi/g
1998	112054	8 - 9.5	28-APR-93	U-235/236	.210	J	.142	pCi/g
1998	112054	8 - 9.5	28-APR-93	U-234	4.140	-	1.034	pCi/g
1998	112054	8 - 9.5	28-APR-93	GROSS ALPHA	19.110	-	0	pCi/g
1998	112054	8 - 9.5	28-APR-93	NP-237	.165	N	0	pCi/g
1998	112054	8 - 9.5	28-APR-93	GROSS BETA	35.780	-	0	pCi/g
1998	112054	8 - 9.5	28-APR-93	TH-230	2.800	-	1.897	pCi/g
1998	112057	10 - 11.5	28-APR-93	CS-137	.105	J	0	pCi/g
1998	112057	10 - 11.5	28-APR-93	PU-238	.133	J	0	pCi/g
1998	112057	10 - 11.5	28-APR-93	NP-237	.490	N	0	pCi/g
1998	112057	10 - 11.5	28-APR-93	U-238	9.220	-	1.122	pCi/g
1998	112057	10 - 11.5	28-APR-93	U-235/236	.400	J	.142	pCi/g
1998	112057	10 - 11.5	28-APR-93	U-234	8.600	-	1.034	pCi/g
1998	112057	10 - 11.5	28-APR-93	TH-TOTAL	12.300	-	9.47	mg/kg
1998	112057	10 - 11.5	28-APR-93	TH-232	1.350	-	1.269	pCi/g
1998	112057	10 - 11.5	28-APR-93	TH-230	4.170	-	1.897	pCi/g
1998	112057	10 - 11.5	28-APR-93	RA-228	1.590	-	1.325	pCi/g
1998	112057	10 - 11.5	28-APR-93	RA-226	2.070	-	1.47	pCi/g
1998	112057	10 - 11.5	28-APR-93	U-TOTAL	31.700	-	2.54	mg/kg
1998	112057	10 - 11.5	28-APR-93	PU-239/240	.100	J	0	pCi/g
1998	112057	10 - 11.5	28-APR-93	GROSS BETA	33.670	-	0	pCi/g
1998	112057	10 - 11.5	28-APR-93	GROSS ALPHA	38.340	-	0	pCi/g
1998	112065	17 - 18.5	28-APR-93	GROSS ALPHA	7.810	-	0	pCi/g
1998	112065	17 - 18.5	28-APR-93	U-TOTAL	4.390	-	2.54	mg/kg
1998	112065	17 - 18.5	28-APR-93	PU-238	.066	J	0	pCi/g
1998	112065	17 - 18.5	28-APR-93	NP-237	.160	N	0	pCi/g
1998	112065	17 - 18.5	28-APR-93	GROSS BETA	19.400	-	0	pCi/g
VOLATILE ORGANICS								
11052	116427	19 - 21	25-MAY-93	Acetone	6.000	J	0	ug/kg
11054	116340	16 - 17	21-MAY-93	Toluene	2.000	J	0	ug/kg
11054	116341	23 - 24	21-MAY-93	Toluene	1.000	J	0	ug/kg
11055	116331	16 - 18	19-MAY-93	1,1,1-Trichloroethane	8.000	J	0	ug/kg
11055	116331	16 - 18	19-MAY-93	Acetone	23.000	J	0	ug/kg
11055	116331	16 - 18	19-MAY-93	Tetrachloroethene	1.000	J	0	ug/kg
11055	116332	23.5 - 25	19-MAY-93	Acetone	11.000	-	0	ug/kg
11055	116332	23.5 - 25	19-MAY-93	Toluene	37.000	-	0	ug/kg
11056	116335	17 - 18	20-MAY-93	1,1,1-Trichloroethane	12.000	J	0	ug/kg
11056	116335	17 - 18	20-MAY-93	Toluene	23.000	J	0	ug/kg
11057	116337	17 - 18	20-MAY-93	Toluene	1.000	J	0	ug/kg
1994	116264	2 - 3.5	12-MAY-93	1,1,1-Trichloroethane	18.000	J	0	ug/kg

TABLE E-2C
(Continued)

SAMPLE LOCATION	SAMPLE ID	SAMPLE INTERVALS	SAMPLE DATE	PARAMETER	RESULTS	VAL QUAL	BACKGROUND	UNITS
VOLATILE ORGANICS (Continued)								
1994	116264	2 - 3.5	12-MAY-93	Methylene chloride	54.000	J	0	ug/kg
1994	116264	2 - 3.5	12-MAY-93	Toluene	4.000	J	0	ug/kg
1994	116264	2 - 3.5	12-MAY-93	Acetone	12.000	J	0	ug/kg
1994	116283	14 - 15.5	12-MAY-93	1,1,1-Trichloroethane	35.000	J	0	ug/kg
1994	116283	14 - 15.5	12-MAY-93	Toluene	22.000	J	0	ug/kg
1994	116283	14 - 15.5	12-MAY-93	Methylene chloride	110.000	J	0	ug/kg
1994	116283	14 - 15.5	12-MAY-93	Chloromethane	52.000	J	0	ug/kg
1994	116283	14 - 15.5	12-MAY-93	4-Methyl-2-pentanone	3.000	J	0	ug/kg
1994	116283	14 - 15.5	12-MAY-93	Acetone	29.000	J	0	ug/kg
1994	116301	26 - 27.5	13-MAY-93	1,1,1-Trichloroethane	5.000	J	0	ug/kg
1994	116301	26 - 27.5	13-MAY-93	Acetone	3.000	J	0	ug/kg
1994	116301	26 - 27.5	13-MAY-93	Toluene	97.000	J	0	ug/kg
1994	116301	26 - 27.5	13-MAY-93	Methylene chloride	66.000	-	0	ug/kg
1994	116312	36 - 37.5	13-MAY-93	Acetone	12.000	-	0	ug/kg
1994	116312	36 - 37.5	13-MAY-93	Methylene chloride	53.000	-	0	ug/kg
1994	116312	36 - 37.5	13-MAY-93	Toluene	4.000	J	0	ug/kg
1995	116080	2 - 3.5	01-MAY-93	1,1,1-Trichloroethane	32.000	J	0	ug/kg
1995	116080	2 - 3.5	01-MAY-93	Toluene	14.000	J	0	ug/kg
1995	116090	8 - 9	01-MAY-93	Methylene chloride	180.000	J	0	ug/kg
1995	116090	8 - 9	01-MAY-93	Toluene	1800.000	J	0	ug/kg
1995	116172	30 - 31.5	02-MAY-93	1,1,1-Trichloroethane	1.000	J	0	ug/kg
1995	116392	8 - 9.5	07-JUN-93	1,1,1-Trichloroethane	920.000	J	0	ug/kg
1995	116392	8 - 9.5	07-JUN-93	Trichloroethene	2.000	J	0	ug/kg
1995	116392	8 - 9.5	07-JUN-93	Toluene	25.000	J	0	ug/kg
1995	116392	8 - 9.5	07-JUN-93	Methylene chloride	67.000	J	0	ug/kg
1995	116392	8 - 9.5	07-JUN-93	Acetone	10.000	J	0	ug/kg
1996	112077	8 - 9.5	29-APR-93	Toluene	180.000	-	0	ug/kg
1996	112084	14 - 15	29-APR-93	Toluene	1000.000	J	0	ug/kg
1996	116070	20 - 21.5	29-APR-93	4-Methyl-2-pentanone	6.000	J	0	ug/kg
1996	116070	20 - 21.5	29-APR-93	Toluene	78.000	J	0	ug/kg
1997	116177	- 1.5	05-MAY-93	Toluene	14.000	-	0	ug/kg
1997	116192	10 - 11.5	05-MAY-93	Chlorobenzene	14.000	J	0	ug/kg
1997	116243	28.5 - 30	06-MAY-93	Acetone	11.000	J	0	ug/kg
1997	116252	34 - 35.5	07-MAY-93	2-Butanone	3.000	J	0	ug/kg
1997	116252	34 - 35.5	07-MAY-93	Acetone	16.000	-	0	ug/kg
1997	116257	38 - 39	07-MAY-93	Toluene	16.000	-	0	ug/kg
1998	112045	2 - 3.5	28-APR-93	1,1,1-Trichloroethane	16.000	J	0	ug/kg
1998	112045	2 - 3.5	28-APR-93	Toluene	150.000	J	0	ug/kg
1998	112054	8 - 9.5	28-APR-93	1,1,1-Trichloroethane	3.000	J	0	ug/kg
1998	112065	17 - 18.5	28-APR-93	Toluene	59.000	-	0	ug/kg

TABLE E-2C
(Continued)

SAMPLE LOCATION	SAMPLE ID	SAMPLE INTERVALS	SAMPLE DATE	PARAMETER	RESULTS	VAL QUAL	BACKGROUND	UNITS
SEMIVOLATILE ORGANICS								
11006	113492	22.5 - 24	26-APR-93	4-Methylphenol	10.000	J	0	ug/kg
11006	113492	22.5 - 24	26-APR-93	bis(2-Ethylhexyl) phthalate	2.000	J	0	ug/kg
11006	113492	22.5 - 24	26-APR-93	Tributyl phosphate	2.000	J	0	ug/kg
11006	113492	22.5 - 24	26-APR-93	Isophorone	4.000	J	0	ug/kg
11006	113492	22.5 - 24	26-APR-93	Indeno(1,2,3-cd)pyrene	4.000	J	0	ug/kg
11006	113492	22.5 - 24	26-APR-93	Dibenzo(a,h)anthracene	2.000	J	0	ug/kg
11006	113492	22.5 - 24	26-APR-93	Chrysene	8.000	J	0	ug/kg
11006	113492	22.5 - 24	26-APR-93	Carbazole	1.000	J	0	ug/kg
11006	113492	22.5 - 24	26-APR-93	Benzo(k)fluoranthene	6.000	J	0	ug/kg
11006	113492	22.5 - 24	26-APR-93	Benzo(g,h,i)perylene	4.000	J	0	ug/kg
11006	113492	22.5 - 24	26-APR-93	Benzo(b)fluoranthene	5.000	J	0	ug/kg
11006	113492	22.5 - 24	26-APR-93	Benzo(a)pyrene	7.000	J	0	ug/kg
11006	113492	22.5 - 24	26-APR-93	Benzo(a)anthracene	8.000	J	0	ug/kg
11006	113492	22.5 - 24	26-APR-93	Anthracene	3.000	J	0	ug/kg
11006	113492	22.5 - 24	26-APR-93	Pyrene	14.000	J	0	ug/kg
11006	113492	22.5 - 24	26-APR-93	Phenol	2.000	J	0	ug/kg
11006	113492	22.5 - 24	26-APR-93	Phenanthrene	10.000	J	0	ug/kg
11006	113492	22.5 - 24	26-APR-93	Fluoranthene	16.000	J	0	ug/kg
11051	116441	22 - 24	27-MAY-93	4-Methylphenol	54.000	J	0	ug/kg
11051	116441	22 - 24	27-MAY-93	Benzo(a)anthracene	100.000	J	0	ug/kg
11051	116441	22 - 24	27-MAY-93	Benzo(b)fluoranthene	81.000	J	0	ug/kg
11051	116441	22 - 24	27-MAY-93	Chrysene	110.000	J	0	ug/kg
11051	116441	22 - 24	27-MAY-93	Di-n-butyl phthalate	55.000	J	0	ug/kg
11051	116441	22 - 24	27-MAY-93	Phenanthrene	210.000	J	0	ug/kg
11051	116441	22 - 24	27-MAY-93	Indeno(1,2,3-cd)pyrene	46.000	J	0	ug/kg
11051	116441	22 - 24	27-MAY-93	bis(2-Ethylhexyl) phthalate	160.000	J	0	ug/kg
11051	116441	22 - 24	27-MAY-93	Tributyl phosphate	200.000	J	0	ug/kg
11051	116441	22 - 24	27-MAY-93	Pyrene	220.000	J	0	ug/kg
11051	116441	22 - 24	27-MAY-93	Fluoranthene	260.000	J	0	ug/kg
11051	116441	22 - 24	27-MAY-93	Benzo(k)fluoranthene	84.000	J	0	ug/kg
11051	116441	22 - 24	27-MAY-93	Benzo(g,h,i)perylene	57.000	J	0	ug/kg
11051	116441	22 - 24	27-MAY-93	Benzo(a)pyrene	88.000	J	0	ug/kg
11052	116427	19 - 21	25-MAY-93	bis(2-Ethylhexyl) phthalate	52.000	J	0	ug/kg
11054	116340	16 - 17	21-MAY-93	bis(2-Ethylhexyl) phthalate	54.000	J	0	ug/kg
11054	116341	23 - 24	21-MAY-93	bis(2-Ethylhexyl) phthalate	46.000	J	0	ug/kg
11055	116331	16 - 18	19-MAY-93	Di-n-butyl phthalate	59.000	J	0	ug/kg
11055	116331	16 - 18	19-MAY-93	bis(2-Ethylhexyl) phthalate	48.000	J	0	ug/kg
11055	116332	23.5 - 25	19-MAY-93	bis(2-Ethylhexyl) phthalate	36.000	J	0	ug/kg
11056	116336	23 - 24	20-MAY-93	Di-n-butyl phthalate	43.000	J	0	ug/kg
11056	116336	23 - 24	20-MAY-93	bis(2-Ethylhexyl) phthalate	57.000	J	0	ug/kg
1994	116264	2 - 3.5	12-MAY-93	Anthracene	49.000	J	0	ug/kg
1994	116264	2 - 3.5	12-MAY-93	bis(2-Ethylhexyl) phthalate	500.000	-	0	ug/kg
1994	116264	2 - 3.5	12-MAY-93	Pyrene	260.000	J	0	ug/kg

TABLE E-2C
(Continued)

SAMPLE LOCATION	SAMPLE ID	SAMPLE INTERVALS	SAMPLE DATE	PARAMETER	RESULTS	VAL QUAL	BACKGROUND	UNITS
SEMIVOLATILE ORGANICS (Continued)								
1994	116264	2 - 3.5	12-MAY-93	Phenanthrene	280.000	J	0	ug/kg
1994	116264	2 - 3.5	12-MAY-93	Indeno(1,2,3-cd)pyrene	63.000	J	0	ug/kg
1994	116264	2 - 3.5	12-MAY-93	Fluoranthene	340.000	J	0	ug/kg
1994	116264	2 - 3.5	12-MAY-93	Chrysene	150.000	J	0	ug/kg
1994	116264	2 - 3.5	12-MAY-93	Benzo(k)fluoranthene	190.000	J	0	ug/kg
1994	116264	2 - 3.5	12-MAY-93	Benzo(g,h,i)perylene	59.000	J	0	ug/kg
1994	116264	2 - 3.5	12-MAY-93	Benzo(b)fluoranthene	140.000	J	0	ug/kg
1994	116264	2 - 3.5	12-MAY-93	Benzo(a)pyrene	98.000	J	0	ug/kg
1994	116264	2 - 3.5	12-MAY-93	Benzo(a)anthracene	130.000	J	0	ug/kg
1994	116283	14 - 15.5	12-MAY-93	bis(2-Ethylhexyl) phthalate	860.000	-	0	ug/kg
1994	116301	26 - 27.5	13-MAY-93	bis(2-Ethylhexyl) phthalate	990.000	-	0	ug/kg
1994	116312	36 - 37.5	13-MAY-93	bis(2-Ethylhexyl) phthalate	48.000	J	0	ug/kg
1995	116080	2 - 3.5	01-MAY-93	Benzo(a)anthracene	39.000	J	0	ug/kg
1995	116080	2 - 3.5	01-MAY-93	Chrysene	48.000	J	0	ug/kg
1995	116080	2 - 3.5	01-MAY-93	bis(2-Ethylhexyl) phthalate	2600.000	-	0	ug/kg
1995	116080	2 - 3.5	01-MAY-93	Pyrene	96.000	J	0	ug/kg
1995	116080	2 - 3.5	01-MAY-93	Phenanthrene	56.000	J	0	ug/kg
1995	116080	2 - 3.5	01-MAY-93	Fluoranthene	99.000	J	0	ug/kg
1995	116080	2 - 3.5	01-MAY-93	Benzo(k)fluoranthene	43.000	J	0	ug/kg
1995	116090	8 - 9	01-MAY-93	bis(2-Ethylhexyl) phthalate	1600.000	-	0	ug/kg
1995	116172	30 - 31.5	02-MAY-93	Diethyl phthalate	180.000	J	0	ug/kg
1995	116172	30 - 31.5	02-MAY-93	bis(2-Ethylhexyl) phthalate	58.000	J	0	ug/kg
1996	112077	8 - 9.5	29-APR-93	2-Methylnaphthalene	74.000	J	0	ug/kg
1996	112077	8 - 9.5	29-APR-93	Di-n-butyl phthalate	110.000	J	0	ug/kg
1996	112077	8 - 9.5	29-APR-93	Phenanthrene	60.000	J	0	ug/kg
1996	112077	8 - 9.5	29-APR-93	bis(2-Ethylhexyl) phthalate	260.000	J	0	ug/kg
1996	112077	8 - 9.5	29-APR-93	Naphthalene	81.000	J	0	ug/kg
1996	112084	14 - 15	29-APR-93	bis(2-Ethylhexyl) phthalate	2800.000	-	0	ug/kg
1996	116070	20 - 21.5	29-APR-93	bis(2-Ethylhexyl) phthalate	130.000	J	0	ug/kg
1997	116192	10 - 11.5	05-MAY-93	Diethyl phthalate	52.000	J	0	ug/kg
1998	112045	2 - 3.5	28-APR-93	bis(2-Ethylhexyl) phthalate	150.000	J	0	ug/kg
1998	112054	8 - 9.5	28-APR-93	bis(2-Ethylhexyl) phthalate	87.000	J	0	ug/kg
1998	112057	10 - 11.5	28-APR-93	bis(2-Ethylhexyl) phthalate	130.000	J	0	ug/kg
1998	112065	17 - 18.5	28-APR-93	bis(2-Ethylhexyl) phthalate	840.000	J	0	ug/kg
PESTICIDES/PCBs								
11006	113492	22.5 - 24	26-APR-93	Aroclor-1254	570.000	J	0	ug/kg
11051	116441	22 - 24	27-MAY-93	Aroclor-1254	180.000	J	0	ug/kg
1995	116080	2 - 3.5	01-MAY-93	Aroclor-1254	120.000	J	0	ug/kg
1995	116080	2 - 3.5	01-MAY-93	alpha-Chlordane	3.300	J	0	ug/kg

TABLE E-2D

INACTIVE FLYASH PILE
CONCENTRATIONS OF DETECTED ANALYTES
ABOVE BACKGROUND[a] IN SURFACE WATER
PHASE I FIELD INVESTIGATION
OPERABLE UNIT 2 REMEDIAL INVESTIGATION
FERNALD ENVIRONMENTAL MANAGEMENT PROJECT

SAMPLE LOCATION	SAMPLE ID	SAMPLE INTERVALS	SAMPLE DATE	PARAMETER	FILTER FLAG	RESULTS	VAL QUAL	BACKGROUND	UNITS
METALS									
ASIT-009	001175	-	30-MAR-89	Barium	UNKN	.027	J	0	mg/L
ASIT-009	001175	-	30-MAR-89	Cadmium	UNKN	.002	J	0	mg/L
ASIT-009	001175	-	30-MAR-89	Iron	UNKN	.284	J	0	mg/L
ASIT-009	001175	-	30-MAR-89	Calcium	UNKN	38.300	J	0	mg/L
ASIT-009	001175	-	30-MAR-89	Manganese	UNKN	.046	J	0	mg/L
ASIT-009	001175	-	30-MAR-89	Nickel	UNKN	.008	J	0	mg/L
ASIT-009	001175	-	30-MAR-89	Sodium	UNKN	1.990	-	0	mg/L
ASIT-009	001175	-	30-MAR-89	Potassium	N/A	2.330	-	0	mg/L
ASIT-009	001175	-	30-MAR-89	Mercury	UNKN	.001	J	0	mg/L
ASIT-009	001175	-	30-MAR-89	Magnesium	UNKN	10.100	J	0	mg/L
ASIT-009	001175	-	30-MAR-89	Lead	UNKN	.008	J	0	mg/L
W-11	001209	-	14-MAY-89	Aluminum	UNKN	.076	J	0	mg/L
W-11	001209	-	14-MAY-89	Barium	UNKN	.031	J	0	mg/L
W-11	001209	-	14-MAY-89	Calcium	UNKN	71.800	J	0	mg/L
W-11	001209	-	14-MAY-89	Magnesium	UNKN	20.900	J	0	mg/L
W-11	001209	-	14-MAY-89	Lead	UNKN	.009	-	0	mg/L
W-11	001209	-	14-MAY-89	Iron	UNKN	.042	J	0	mg/L
W-11	001209	-	14-MAY-89	Manganese	UNKN	.012	J	0	mg/L
W-11	001209	-	14-MAY-89	Mercury	UNKN	.000	-	0	mg/L
W-11	001209	-	14-MAY-89	Silicon	UNKN	2.250	J	0	mg/L
W-11	001209	-	14-MAY-89	Potassium	UNKN	1.680	J	0	mg/L
W-11	001209	-	14-MAY-89	Sodium	UNKN	9.690	J	0	mg/L
W-11	001247	-	15-JUL-90	Barium	UNKN	.047	-	0	mg/L
W-11	001247	-	15-JUL-90	Chromium	UNKN	.026	-	0	mg/L
W-11	001247	-	15-JUL-90	Calcium	UNKN	86.900	-	0	mg/L
W-11	001247	-	15-JUL-90	Cadmium	UNKN	.003	-	0	mg/L
W-11	001247	-	15-JUL-90	Iron	UNKN	.024	-	0	mg/L
W-11	001247	-	15-JUL-90	Magnesium	UNKN	20.600	-	0	mg/L
W-11	001247	-	15-JUL-90	Nickel	UNKN	.025	-	0	mg/L
W-11	001247	-	15-JUL-90	Manganese	UNKN	.009	-	0	mg/L
W-11	001247	-	15-JUL-90	Vanadium	UNKN	.013	-	0	mg/L
W-11	001247	-	15-JUL-90	Sodium	UNKN	9.750	-	0	mg/L
W-11	001247	-	15-JUL-90	Silver	N/A	.013	-	0	mg/L

See footnotes at end of table

TABLE E-2D
(Continued)

SAMPLE LOCATION	SAMPLE ID	SAMPLE INTERVALS	SAMPLE DATE	PARAMETER	FILTER FLAG	RESULTS	VAL QUAL	BACKGROUND	UNITS
METALS (Continued)									
W-11	001247	-	15-JUL-90	Silicon	UNKN	4.610	-	0	mg/L
W-11	001247	-	15-JUL-90	Potassium	UNKN	3.030	-	0	mg/L
W-11	001247	-	15-JUL-90	Lead	UNKN	.006	-	0	mg/L
RADIONUCLIDES									
ASIT-009	001174	-	30-MAR-89	U-TOTAL	FLTR	32.000	-	0	ug/L
ASIT-009	001175	-	30-MAR-89	U-TOTAL	UNFL	40.000	-	0	ug/L
W-11	001107	-	12-JAN-89	U-234	FLTR	3.200	-	0	pCi/L
W-11	001107	-	12-JAN-89	U-238	UNFL	6.800	-	0	pCi/L
W-11	001107	-	12-JAN-89	U-238	FLTR	6.200	-	0	pCi/L
W-11	001107	-	12-JAN-89	U-234	UNFL	5.000	-	0	pCi/L
W-11	001208	-	14-MAY-89	U-234	FLTR	2.200	-	0	pCi/L
W-11	001208	-	14-MAY-89	U-238	FLTR	2.800	-	0	pCi/L
W-11	001208	-	14-MAY-89	U-TOTAL	FLTR	9.000	-	0	ug/L
W-11	001209	-	14-MAY-89	U-234	UNFL	2.500	-	0	pCi/L
W-11	001209	-	14-MAY-89	U-TOTAL	UNFL	9.000	-	0	ug/L
W-11	001209	-	14-MAY-89	U-238	UNFL	2.600	-	0	pCi/L
W-11	001247	-	15-JUL-90	TH-230	UNKN	6.740	J	0	pCi/L
W-11	001247	-	15-JUL-90	TH-TOTAL	N/A	3.580	J	0	ug/L
W-11	001247	-	15-JUL-90	U-238	UNKN	3.660	-	0	pCi/L
W-11	001247	-	15-JUL-90	U-234	UNKN	4.260	-	0	pCi/L
W-11	001248	-	15-JUL-90	SR-90	UNKN	24.000	-	0	pCi/L
W-11	001248	-	15-JUL-90	TH-230	UNKN	2.810	J	0	pCi/L
W-11	001248	-	15-JUL-90	U-238	UNKN	3.500	-	0	pCi/L
W-11	001248	-	15-JUL-90	U-234	UNKN	3.680	-	0	pCi/L
GENERAL CHEMISTRY									
ASIT-009	001175	-	30-MAR-89	Ammonia	UNFL	.163	J	0	mg/L
ASIT-009	001175	-	30-MAR-89	Chloride	UNFL	3.500	J	0	mg/L
ASIT-009	001175	-	30-MAR-89	Phosphorus	UNFL	.842	J	0	mg/L
ASIT-009	001175	-	30-MAR-89	Nitrate	UNFL	.140	J	0	mg/L
ASIT-009	001175	-	30-MAR-89	Fluoride	UNFL	.300	J	0	mg/L
ASIT-009	001175	-	30-MAR-89	Sulfate	N/A	171.000	J	0	mg/L
ASIT-009	001175	-	30-MAR-89	Total Organic Halides	UNFL	.016	J	0	mg/L
ASIT-009	001175	-	30-MAR-89	Total Organic Nitrogen	UNFL	.927	J	0	mg/L
ASIT-009	001175	-	30-MAR-89	Total Kjeldahl Nitrogen	UNFL	1.090	J	0	mg/L
W-11	001107	-	12-JAN-89	Ammonia	UNFL	.452	-	0	mg/L
W-11	001107	-	12-JAN-89	Chloride	UNFL	16.500	J	0	mg/L
W-11	001107	-	12-JAN-89	Phosphorus	UNFL	.541	J	0	mg/L
W-11	001107	-	12-JAN-89	Nitrate	UNFL	4.600	J	0	mg/L

See footnotes at end of table

TABLE E-2D
(Continued)

SAMPLE LOCATION	SAMPLE ID	SAMPLE INTERVALS	SAMPLE DATE	PARAMETER	FILTER FLAG	RESULTS	VAL QUAL	BACKGROUND	UNITS
GENERAL CHEMISTRY (Continued)									
W-11	001107	-	12-JAN-89	Fluoride	UNFL	.215	-	0	mg/L
W-11	001107	-	12-JAN-89	Sulfate	UNFL	37.000	J	0	mg/L
W-11	001107	-	12-JAN-89	Total Organic Nitrogen	UNFL	1.360	J	0	mg/L
W-11	001107	-	12-JAN-89	Total Kjeldahl Nitrogen	UNFL	1.810	J	0	mg/L
W-11	001209	-	14-MAY-89	Chloride	UNFL	19.990	J	0	mg/L
W-11	001209	-	14-MAY-89	Total Organic Nitrogen	UNFL	.347	J	0	mg/L
W-11	001209	-	14-MAY-89	Total Organic Halides	UNFL	.010	J	0	mg/L
W-11	001209	-	14-MAY-89	Fluoride	UNFL	.180	J	0	mg/L
W-11	001209	-	14-MAY-89	Sulfate	UNFL	57.360	J	0	mg/L
W-11	001209	-	14-MAY-89	Total Kjeldahl Nitrogen	UNFL	.347	J	0	mg/L
W-11	001209	-	14-MAY-89	Nitrate	UNFL	2.310	J	0	mg/L
W-11	001247	-	15-JUL-90	Chloride	UNFL	9.210	-	0	mg/L
W-11	001247	-	15-JUL-90	Phosphorus	UNFL	.170	J	0	mg/L
W-11	001247	-	15-JUL-90	Total Organic Carbon	UNFL	5.590	-	0	mg/L
W-11	001247	-	15-JUL-90	Total Organic Nitrogen	UNFL	.580	-	0	mg/L
W-11	001247	-	15-JUL-90	Sulfate	UNFL	44.800	-	0	mg/L
W-11	001247	-	15-JUL-90	Nitrate	UNFL	12.100	J	0	mg/L
W-11	001247	-	15-JUL-90	Fluoride	UNFL	.220	-	0	mg/L

[a]Zero background concentration has been used for surface water. Background data for surface water is not available at this time.

FLTR = Filtered sample; filtered status identified on Request for Analysis/Chain of Custody

UNFL = Unfiltered sample; filtered status identified on Request for Analysis/Chain of Custody

N/A = Not applicable

TABLE E-2E

INACTIVE FLYASH PILE
CONCENTRATIONS OF DETECTED ANALYTES
ABOVE BACKGROUND[a] IN SURFACE WATER
PHASE II FIELD INVESTIGATION
OPERABLE UNIT 2 REMEDIAL INVESTIGATION
FERNALD ENVIRONMENTAL MANAGEMENT PROJECT

SAMPLE LOCATION	SAMPLE ID	SAMPLE INTERVALS	SAMPLE DATE	PARAMETER	FILTER FLAG	RESULTS	VAL QUAL	BACKGROUND	UNITS
METALS									
IFP-SW-02	111828	-	26-APR-93	Aluminum	FLTR	.131	-	0	mg/L
IFP-SW-02	111828	-	26-APR-93	Barium	FLTR	.041	-	0	mg/L
IFP-SW-02	111828	-	26-APR-93	Calcium	FLTR	82.600	J	0	mg/L
IFP-SW-02	111828	-	26-APR-93	Iron	FLTR	.073	-	0	mg/L
IFP-SW-02	111828	-	26-APR-93	Manganese	FLTR	.023	-	0	mg/L
IFP-SW-02	111828	-	26-APR-93	Silicon	FLTR	5.760	-	0	mg/L
IFP-SW-02	111828	-	26-APR-93	Sodium	FLTR	2.720	J	0	mg/L
IFP-SW-02	111828	-	26-APR-93	Potassium	FLTR	1.830	-	0	mg/L
IFP-SW-02	111828	-	26-APR-93	Magnesium	FLTR	24.800	J	0	mg/L
IFP-SW-02	112022	-	30-APR-93	Aluminum	FLTR	.083	-	0	mg/L
IFP-SW-02	112022	-	30-APR-93	Barium	FLTR	.066	J	0	mg/L
IFP-SW-02	112022	-	30-APR-93	Magnesium	FLTR	45.700	-	0	mg/L
IFP-SW-02	112022	-	30-APR-93	Sodium	FLTR	6.010	-	0	mg/L
IFP-SW-02	112022	-	30-APR-93	Silicon	FLTR	7.040	-	0	mg/L
IFP-SW-02	112022	-	30-APR-93	Selenium	FLTR	.004	-	0	mg/L
IFP-SW-02	112022	-	30-APR-93	Potassium	FLTR	1.740	-	0	mg/L
IFP-SW-02	112022	-	30-APR-93	Manganese	FLTR	.013	-	0	mg/L
IFP-SW-02	112022	-	30-APR-93	Arsenic	FLTR	.001	-	0	mg/L
IFP-SW-02	112022	-	30-APR-93	Calcium	FLTR	132.000	-	0	mg/L
IFP-SW-03	111819	-	21-APR-93	Barium	FLTR	.038	-	0	mg/L
IFP-SW-03	111819	-	21-APR-93	Sodium	FLTR	12.500	J	0	mg/L
IFP-SW-03	111819	-	21-APR-93	Silicon	FLTR	1.310	-	0	mg/L
IFP-SW-03	111819	-	21-APR-93	Potassium	FLTR	1.930	-	0	mg/L
IFP-SW-03	111819	-	21-APR-93	Manganese	FLTR	.029	-	0	mg/L
IFP-SW-03	111819	-	21-APR-93	Calcium	FLTR	90.000	J	0	mg/L
IFP-SW-03	111819	-	21-APR-93	Magnesium	FLTR	23.400	J	0	mg/L
IFP-SW-03	112027	-	01-MAY-93	Aluminum	FLTR	.051	-	0	mg/L
IFP-SW-03	112027	-	01-MAY-93	Calcium	FLTR	88.000	-	0	mg/L
IFP-SW-03	112027	-	01-MAY-93	Barium	FLTR	.042	J	0	mg/L
IFP-SW-03	112027	-	01-MAY-93	Sodium	FLTR	12.200	-	0	mg/L
IFP-SW-03	112027	-	01-MAY-93	Silicon	FLTR	1.080	-	0	mg/L
IFP-SW-03	112027	-	01-MAY-93	Potassium	FLTR	1.780	-	0	mg/L
IFP-SW-03	112027	-	01-MAY-93	Manganese	FLTR	.017	-	0	mg/L

See footnotes at end of table

0 49
5174

TABLE E-2E
(Continued)

SAMPLE LOCATION	SAMPLE ID	SAMPLE INTERVALS	SAMPLE DATE	PARAMETER	FILTER FLAG	RESULTS	VAL QUAL	BACKGROUND	UNITS
METALS (Continued)									
IFP-SW-03	112027	-	01-MAY-93	Magnesium	FLTR	23.200	-	0	mg/L
IFP-SW-04	111820	-	21-APR-93	Barium	UNFL	.037	-	0	mg/L
IFP-SW-04	111820	-	21-APR-93	Magnesium	UNFL	23.800	J	0	mg/L
IFP-SW-04	111820	-	21-APR-93	Sodium	UNFL	12.800	J	0	mg/L
IFP-SW-04	111820	-	21-APR-93	Calcium	UNFL	89.900	J	0	mg/L
IFP-SW-04	111820	-	21-APR-93	Cyanide	UNFL	.004	-	0	mg/L
IFP-SW-04	111820	-	21-APR-93	Zinc	UNFL	.015	-	0	mg/L
IFP-SW-04	111820	-	21-APR-93	Silicon	UNFL	1.300	-	0	mg/L
IFP-SW-04	111820	-	21-APR-93	Potassium	UNFL	1.930	-	0	mg/L
IFP-SW-04	111820	-	21-APR-93	Manganese	UNFL	.027	-	0	mg/L
IFP-SW-04	112015	-	29-APR-93	Aluminum	FLTR	.048	-	0	mg/L
IFP-SW-04	112015	-	29-APR-93	Magnesium	FLTR	22.700	-	0	mg/L
IFP-SW-04	112015	-	29-APR-93	Calcium	FLTR	85.500	-	0	mg/L
IFP-SW-04	112015	-	29-APR-93	Cyanide	UNFL	.001	-	0	mg/L
IFP-SW-04	112015	-	29-APR-93	Barium	FLTR	.042	J	0	mg/L
IFP-SW-04	112015	-	29-APR-93	Sodium	FLTR	11.800	-	0	mg/L
IFP-SW-04	112015	-	29-APR-93	Silicon	FLTR	1.660	-	0	mg/L
IFP-SW-04	112015	-	29-APR-93	Potassium	FLTR	1.800	-	0	mg/L
IFP-SW-04	112015	-	29-APR-93	Manganese	FLTR	.017	-	0	mg/L
RADIONUCLIDES									
IFP-SW-02	111828	-	26-APR-93	GROSS ALPHA	UNFL	72.900	J	0	pCi/L
IFP-SW-02	111828	-	26-APR-93	U-238	UNFL	59.700	-	0	pCi/L
IFP-SW-02	111828	-	26-APR-93	U-235/236	UNFL	2.900	-	0	pCi/L
IFP-SW-02	111828	-	26-APR-93	U-TOTAL	UNFL	165.000	-	0	ug/L
IFP-SW-02	111828	-	26-APR-93	GROSS BETA	UNFL	51.300	J	0	pCi/L
IFP-SW-02	111828	-	26-APR-93	RA-226	UNFL	.148	J	0	pCi/L
IFP-SW-02	111828	-	26-APR-93	TH-230	UNFL	.653	J	0	pCi/L
IFP-SW-02	111828	-	26-APR-93	U-234	UNFL	61.000	-	0	pCi/L
IFP-SW-02	112022	-	30-APR-93	GROSS ALPHA	UNFL	426.000	J	0	pCi/L
IFP-SW-02	112022	-	30-APR-93	PU-239/240	UNFL	.200	J	0	pCi/L
IFP-SW-02	112022	-	30-APR-93	GROSS BETA	UNFL	172.000	J	0	pCi/L
IFP-SW-02	112022	-	30-APR-93	U-TOTAL	UNFL	820.000	-	0	ug/L
IFP-SW-02	112022	-	30-APR-93	U-238	UNFL	257.000	-	0	pCi/L
IFP-SW-02	112022	-	30-APR-93	U-235/236	UNFL	14.000	-	0	pCi/L
IFP-SW-02	112022	-	30-APR-93	U-234	UNFL	265.000	-	0	pCi/L
IFP-SW-02	112022	-	30-APR-93	TH-230	UNFL	.340	J	0	pCi/L
IFP-SW-02	112022	-	30-APR-93	NP-237	UNFL	.790	N	0	pCi/L
IFP-SW-02	112022	-	30-APR-93	PU-238	UNFL	2.910	-	0	pCi/L
IFP-SW-03	111819	-	21-APR-93	GROSS BETA	UNFL	8.560	-	0	pCi/L
IFP-SW-03	111819	-	21-APR-93	NP-237	UNFL	.435	N	0	pCi/L

See footnotes at end of table

TABLE E-2E
(Continued)

SAMPLE LOCATION	SAMPLE ID	SAMPLE INTERVALS	SAMPLE DATE	PARAMETER	FILTER FLAG	RESULTS	VAL QUAL	BACKGROUND	UNITS
RADIONUCLIDES (Continued)									
IFP-SW-03	111819	-	21-APR-93	U-234	UNFL	2.320	-	0	pCi/L
IFP-SW-03	111819	-	21-APR-93	U-TOTAL	UNFL	5.250	-	0	ug/L
IFP-SW-03	111819	-	21-APR-93	U-238	UNFL	1.740	-	0	pCi/L
IFP-SW-03	112027	-	01-MAY-93	PU-238	UNFL	.170	J	0	pCi/L
IFP-SW-03	112027	-	01-MAY-93	TH-230	UNFL	.320	J	0	pCi/L
IFP-SW-03	112027	-	01-MAY-93	U-TOTAL	UNFL	5.030	-	0	ug/L
IFP-SW-03	112027	-	01-MAY-93	U-238	UNFL	2.130	-	0	pCi/L
IFP-SW-03	112027	-	01-MAY-93	U-234	UNFL	1.760	-	0	pCi/L
IFP-SW-03	112027	-	01-MAY-93	PU-239/240	UNFL	.250	J	0	pCi/L
IFP-SW-03	112027	-	01-MAY-93	TH-228	UNFL	.027	J	0	pCi/L
IFP-SW-04	111820	-	21-APR-93	TH-230	UNFL	.260	-	0	pCi/L
IFP-SW-04	111820	-	21-APR-93	U-234	UNFL	2.350	J	0	pCi/L
IFP-SW-04	111820	-	21-APR-93	U-235/236	UNFL	.160	J	0	pCi/L
IFP-SW-04	111820	-	21-APR-93	U-TOTAL	UNFL	5.870	-	0	ug/L
IFP-SW-04	111820	-	21-APR-93	U-238	UNFL	2.260	J	0	pCi/L
IFP-SW-04	112015	-	29-APR-93	PU-239/240	UNFL	.266	J	0	pCi/L
IFP-SW-04	112015	-	29-APR-93	TH-230	UNFL	.433	J	0	pCi/L
IFP-SW-04	112015	-	29-APR-93	U-TOTAL	UNFL	4.570	-	0	ug/L
IFP-SW-04	112015	-	29-APR-93	U-238	UNFL	1.840	-	0	pCi/L
IFP-SW-04	112015	-	29-APR-93	U-234	UNFL	1.420	-	0	pCi/L
VOLATILE ORGANICS									
IFP-SW-02	111828	-	26-APR-93	Toluene	UNFL	2.000	J	0	ug/L
SEMIVOLATILE ORGANICS									
IFP-SW-02	111828	-	26-APR-93	bis(2-Ethylhexyl) phthalate	UNFL	1.000	J	0	ug/L
GENERAL CHEMISTRY									
IFP-SW-02	111828	-	26-APR-93	Ammonia	UNFL	.130	-	0	mg/L
IFP-SW-02	111828	-	26-APR-93	Total Organic Nitrogen	UNFL	.770	-	0	mg/L
IFP-SW-02	111828	-	26-APR-93	Total Organic Halides	UNFL	.011	-	0	mg/L
IFP-SW-02	111828	-	26-APR-93	Total Organic Carbon	UNFL	5.770	-	0	mg/L
IFP-SW-02	111828	-	26-APR-93	Total Kjeldahl Nitrogen	UNFL	.900	-	0	mg/L
IFP-SW-02	111828	-	26-APR-93	Sulfate	UNFL	67.000	-	0	mg/L
IFP-SW-02	111828	-	26-APR-93	Nitrate	UNFL	.140	J	0	mg/L
IFP-SW-02	111828	-	26-APR-93	Chloride	UNFL	2.330	-	0	mg/L
IFP-SW-02	111828	-	26-APR-93	Fluoride	UNFL	.230	-	0	mg/L
IFP-SW-02	112022	-	30-APR-93	Chloride	UNFL	4.630	-	0	mg/L
IFP-SW-02	112022	-	30-APR-93	Total Kjeldahl Nitrogen	UNFL	.180	-	0	mg/L
IFP-SW-02	112022	-	30-APR-93	Total Organic Nitrogen	UNFL	.180	-	0	mg/L

See footnotes at end of table

TABLE E-2E
(Continued)

SAMPLE LOCATION	SAMPLE ID	SAMPLE INTERVALS	SAMPLE DATE	PARAMETER	FILTER FLAG	RESULTS	VAL QUAL	BACKGROUND	UNITS
GENERAL CHEMISTRY (Continued)									
IFP-SW-02	112022	-	30-APR-93	Total Organic Carbon	UNFL	2.140	-	0	mg/L
IFP-SW-02	112022	-	30-APR-93	Fluoride	UNFL	.390	-	0	mg/L
IFP-SW-02	112022	-	30-APR-93	Sulfate	UNFL	133.900	-	0	mg/L
IFP-SW-03	111819	-	21-APR-93	Chloride	UNFL	25.720	-	0	mg/L
IFP-SW-03	111819	-	21-APR-93	Total Organic Nitrogen	UNFL	.210	-	0	mg/L
IFP-SW-03	111819	-	21-APR-93	Total Organic Carbon	UNFL	2.500	-	0	mg/L
IFP-SW-03	111819	-	21-APR-93	Total Kjeldahl Nitrogen	UNFL	.210	-	0	mg/L
IFP-SW-03	111819	-	21-APR-93	Sulfate	UNFL	62.900	-	0	mg/L
IFP-SW-03	111819	-	21-APR-93	Fluoride	UNFL	.200	-	0	mg/L
IFP-SW-03	112027	-	01-MAY-93	Chloride	UNFL	23.650	-	0	mg/L
IFP-SW-03	112027	-	01-MAY-93	Total Organic Carbon	UNFL	1.980	-	0	mg/L
IFP-SW-03	112027	-	01-MAY-93	Total Kjeldahl Nitrogen	UNFL	.320	-	0	mg/L
IFP-SW-03	112027	-	01-MAY-93	Sulfate	UNFL	77.400	-	0	mg/L
IFP-SW-03	112027	-	01-MAY-93	Fluoride	UNFL	.210	-	0	mg/L
IFP-SW-04	111820	-	21-APR-93	Chloride	UNFL	25.400	-	0	mg/L
IFP-SW-04	111820	-	21-APR-93	Fluoride	UNFL	.190	-	0	mg/L
IFP-SW-04	111820	-	21-APR-93	Nitrate	UNFL	1.640	J	0	mg/L
IFP-SW-04	111820	-	21-APR-93	Phosphorus	UNFL	.060	-	0	mg/L
IFP-SW-04	111820	-	21-APR-93	Total Kjeldahl Nitrogen	UNFL	.280	-	0	mg/L
IFP-SW-04	111820	-	21-APR-93	Total Organic Nitrogen	UNFL	.280	-	0	mg/L
IFP-SW-04	111820	-	21-APR-93	Total Organic Carbon	UNFL	3.000	-	0	mg/L
IFP-SW-04	111820	-	21-APR-93	Sulfate	UNFL	73.200	-	0	mg/L
IFP-SW-04	112015	-	29-APR-93	Chloride	UNFL	23.600	-	0	mg/L
IFP-SW-04	112015	-	29-APR-93	Nitrate	UNFL	1.570	J	0	mg/L
IFP-SW-04	112015	-	29-APR-93	Sulfate	UNFL	66.700	-	0	mg/L
IFP-SW-04	112015	-	29-APR-93	Total Organic Nitrogen	UNFL	.430	-	0	mg/L
IFP-SW-04	112015	-	29-APR-93	Total Organic Carbon	UNFL	2.290	-	0	mg/L
IFP-SW-04	112015	-	29-APR-93	Total Kjeldahl Nitrogen	UNFL	.430	-	0	mg/L
IFP-SW-04	112015	-	29-APR-93	Phosphorus	UNFL	.050	-	0	mg/L
IFP-SW-04	112015	-	29-APR-93	Fluoride	UNFL	.210	-	0	mg/L

[a]Zero background concentration has been used for surface water. Background data for surface water is not available at this time.

FLTR = Filtered sample; filtered status identified on Request for Analysis/Chain of Custody

UNFL = Unfiltered sample; filtered status identified on Request for Analysis/Chain of Custody

TABLE E-2F

INACTIVE FLYASH PILE
CONCENTRATIONS OF DETECTED ANALYTES
ABOVE BACKGROUND IN SEDIMENT
PHASE I FIELD INVESTIGATION
OPERABLE UNIT 2 REMEDIAL INVESTIGATION
FERNALD ENVIRONMENTAL MANAGEMENT PROJECT

SAMPLE LOCATION	SAMPLE ID	SAMPLE INTERVALS	SAMPLE DATE	PARAMETER	RESULTS	VAL QUAL	BACKGROUND	UNITS
METALS								
W-11	009145	-	12-JAN-89	Cadmium	4.500	-	.77	mg/kg
W-11	009145	-	12-JAN-89	Calcium	110000.000	-	5296.781	mg/kg
W-11	009145	-	12-JAN-89	Chromium	17.400	-	17.057	mg/kg
W-11	009145	-	12-JAN-89	Magnesium	26600.000	-	1460	mg/kg
W-11	009145	-	12-JAN-89	Sodium	188.000	J	55.145	mg/kg
RADIONUCLIDES								
ASIT-008	009048	-	27-JUN-88	U-TOTAL	13.900	J	3.24	mg/kg
ASIT-009	009049	-	27-JUN-88	U-TOTAL	5.380	J	3.24	mg/kg

TABLE E-2G

INACTIVE FLYASH PILE
CONCENTRATIONS OF DETECTED ANALYTES
ABOVE BACKGROUND IN SEDIMENT
PHASE II FIELD INVESTIGATION
OPERABLE UNIT 2 REMEDIAL INVESTIGATION
FERNALD ENVIRONMENTAL MANAGEMENT PROJECT

SAMPLE LOCATION	SAMPLE ID	SAMPLE INTERVALS	SAMPLE DATE	PARAMETER	RESULTS	VAL QUAL	BACKGROUND	UNITS
METALS								
IFP-SD-02	111812	- .5	17-APR-93	Calcium	111000.000	-	5296.781	mg/kg
IFP-SD-02	111812	- .5	17-APR-93	Magnesium	29600.000	-	1460	mg/kg
IFP-SD-02	111812	- .5	17-APR-93	Sodium	150.000	-	55.145	mg/kg
IFP-SD-02	112021	0 - .5	30-APR-93	Calcium	105000.000	J	5296.781	mg/kg
IFP-SD-02	112021	0 - .5	30-APR-93	Sodium	175.000	-	55.145	mg/kg
IFP-SD-02	112021	0 - .5	30-APR-93	Magnesium	22500.000	-	1460	mg/kg
IFP-SD-03	111813	0 - .5	17-APR-93	Calcium	191000.000	-	5296.781	mg/kg
IFP-SD-03	111813	0 - .5	17-APR-93	Magnesium	29800.000	-	1460	mg/kg
IFP-SD-03	111813	0 - .5	17-APR-93	Sodium	157.000	-	55.145	mg/kg
IFP-SD-03	116219	-	01-MAY-93	Beryllium	1.200	-	.6	mg/kg
IFP-SD-03	116219	-	01-MAY-93	Sodium	172.000	J	55.145	mg/kg
IFP-SD-03	116219	-	01-MAY-93	Magnesium	21300.000	J	1460	mg/kg
IFP-SD-03	116219	-	01-MAY-93	Calcium	93700.000	-	5296.781	mg/kg
IFP-SD-04	111815	0 - .5	17-APR-93	Calcium	75200.000	-	5296.781	mg/kg
IFP-SD-04	111815	0 - .5	17-APR-93	Sodium	130.000	-	55.145	mg/kg
IFP-SD-04	111815	0 - .5	17-APR-93	Magnesium	17700.000	-	1460	mg/kg
IFP-SD-04	112017	0 - .5	29-APR-93	Calcium	56000.000	J	5296.781	mg/kg
IFP-SD-04	112017	0 - .5	29-APR-93	Sodium	120.000	-	55.145	mg/kg
IFP-SD-04	112017	0 - .5	29-APR-93	Magnesium	13500.000	-	1460	mg/kg
RADIONUCLIDES								
IFP-SD-02	111812	- .5	17-APR-93	GROSS ALPHA	15.600	-	0	pCi/g
IFP-SD-02	111812	- .5	17-APR-93	U-TOTAL	12.000	J	3.24	mg/kg
IFP-SD-02	111812	- .5	17-APR-93	U-238	1.680	-	1.27	pCi/g
IFP-SD-02	111812	- .5	17-APR-93	U-234	1.500	-	1.319	pCi/g
IFP-SD-02	111812	- .5	17-APR-93	SR-90	.480	J	0	pCi/g
IFP-SD-02	111812	- .5	17-APR-93	PU-239/240	.030	J	0	pCi/g
IFP-SD-02	111812	- .5	17-APR-93	GROSS BETA	17.600	-	0	pCi/g
IFP-SD-02	112021	0 - .5	30-APR-93	GROSS ALPHA	15.200	J	0	pCi/g
IFP-SD-02	112021	0 - .5	30-APR-93	PU-238	.019	J	0	pCi/g
IFP-SD-02	112021	0 - .5	30-APR-93	NP-237	.019	N	0	pCi/g
IFP-SD-02	112021	0 - .5	30-APR-93	U-TOTAL	12.300	J	3.24	mg/kg
IFP-SD-02	112021	0 - .5	30-APR-93	GROSS BETA	16.300	J	0	pCi/g
IFP-SD-03	116219	-	01-MAY-93	GROSS ALPHA	16.640	-	0	pCi/g
IFP-SD-03	116219	-	01-MAY-93	PU-238	.043	J	0	pCi/g
IFP-SD-03	116219	-	01-MAY-93	U-TOTAL	4.090	-	3.24	mg/kg

TABLE E-2G
(Continued)

SAMPLE LOCATION	SAMPLE ID	SAMPLE INTERVALS	SAMPLE DATE	PARAMETER	RESULTS	VAL QUAL	BACKGROUND	UNITS
RADIONUCLIDS (Continued)								
IFP-SD-03	116219	-	01-MAY-93	NP-237	.171	N	0	pCi/g
IFP-SD-03	116219	-	01-MAY-93	GROSS BETA	21.440	-	0	pCi/g
IFP-SD-04	112017	0 - .5	29-APR-93	GROSS ALPHA	14.000	J	0	pCi/g
IFP-SD-04	112017	0 - .5	29-APR-93	PU-239/240	.057	J	0	pCi/g
IFP-SD-04	112017	0 - .5	29-APR-93	U-TOTAL	9.900	J	3.24	mg/kg
IFP-SD-04	112017	0 - .5	29-APR-93	PU-238	.050	J	0	pCi/g
IFP-SD-04	112017	0 - .5	29-APR-93	NP-237	.110	N	0	pCi/g
IFP-SD-04	112017	0 - .5	29-APR-93	GROSS BETA	16.800	J	0	pCi/g
VOLATILE ORGANICS								
IFP-SD-03	116219	-	01-MAY-93	Toluene	35.000	-	0	ug/kg
IFP-SD-04	111815	0 - .5	17-APR-93	Acetone	12.000	J	0	ug/kg
IFP-SD-04	112017	0 - .5	29-APR-93	Acetone	22.000	-	0	ug/kg
SEMIVOLATILE ORGANICS								
IFP-SD-02	111812	- .5	17-APR-93	Benzo(a)pyrene	9.000	J	0	ug/kg
IFP-SD-02	111812	- .5	17-APR-93	Carbazole	7.000	J	0	ug/kg
IFP-SD-02	111812	- .5	17-APR-93	Di-n-octyl phthalate	2.000	J	0	ug/kg
IFP-SD-02	111812	- .5	17-APR-93	Phenol	24.000	J	0	ug/kg
IFP-SD-02	111812	- .5	17-APR-93	bis(2-Ethylhexyl) phthalate	59.000	J	0	ug/kg
IFP-SD-02	112021	0 - .5	30-APR-93	bis(2-Ethylhexyl) phthalate	1200.000	-	0	ug/kg
IFP-SD-03	111813	0 - .5	17-APR-93	Benzo(g,h,i)perylene	130.000	J	0	ug/kg
IFP-SD-03	111813	0 - .5	17-APR-93	Fluoranthene	66.000	J	0	ug/kg
IFP-SD-03	111813	0 - .5	17-APR-93	bis(2-Ethylhexyl) phthalate	51.000	J	0	ug/kg
IFP-SD-03	111813	0 - .5	17-APR-93	Pyrene	47.000	J	0	ug/kg
IFP-SD-03	116219	-	01-MAY-93	4-Methylphenol	310.000	J	0	ug/kg
IFP-SD-03	116219	-	01-MAY-93	Benzoic acid	45.000	J	0	ug/kg
IFP-SD-03	116219	-	01-MAY-93	bis(2-Ethylhexyl) phthalate	2200.000	-	0	ug/kg
IFP-SD-04	111815	0 - .5	17-APR-93	4-Methylphenol	190.000	J	0	ug/kg
IFP-SD-04	111815	0 - .5	17-APR-93	Benzo(k)fluoranthene	53.000	J	0	ug/kg
IFP-SD-04	111815	0 - .5	17-APR-93	Benzo(g,h,i)perylene	38.000	J	0	ug/kg
IFP-SD-04	111815	0 - .5	17-APR-93	Benzo(b)fluoranthene	39.000	J	0	ug/kg
IFP-SD-04	111815	0 - .5	17-APR-93	Chrysene	61.000	J	0	ug/kg
IFP-SD-04	111815	0 - .5	17-APR-93	Diethyl phthalate	14.000	J	0	ug/kg
IFP-SD-04	111815	0 - .5	17-APR-93	Fluorene	7.000	J	0	ug/kg
IFP-SD-04	111815	0 - .5	17-APR-93	Phenanthrene	67.000	J	0	ug/kg
IFP-SD-04	111815	0 - .5	17-APR-93	Indeno(1,2,3-cd)pyrene	35.000	J	0	ug/kg
IFP-SD-04	111815	0 - .5	17-APR-93	bis(2-Ethylhexyl) phthalate	70.000	J	0	ug/kg
IFP-SD-04	111815	0 - .5	17-APR-93	Pyrene	100.000	J	0	ug/kg
IFP-SD-04	111815	0 - .5	17-APR-93	Phenol	42.000	J	0	ug/kg
IFP-SD-04	111815	0 - .5	17-APR-93	Fluoranthene	120.000	J	0	ug/kg
IFP-SD-04	111815	0 - .5	17-APR-93	Di-n-octyl phthalate	7.000	J	0	ug/kg
IFP-SD-04	111815	0 - .5	17-APR-93	Carbazole	7.000	J	0	ug/kg

TABLE E-2G
(Continued)

SAMPLE LOCATION	SAMPLE ID	SAMPLE INTERVALS	SAMPLE DATE	PARAMETER	RESULTS	VAL QUAL	BACKGROUND	UNITS
SEMIVOLATILE ORGANICS (Continued)								
IFP-SD-04	111815	0 - .5	17-APR-93	Anthracene	67.000	J	0	ug/kg
IFP-SD-04	111815	0 - .5	17-APR-93	Benzo(a)pyrene	60.000	J	0	ug/kg
IFP-SD-04	111815	0 - .5	17-APR-93	Benzo(a)anthracene	48.000	J	0	ug/kg
IFP-SD-04	112017	0 - .5	29-APR-93	bis(2-Ethylhexyl) phthalate	700.000	-	0	ug/kg

TABLE E-2H

INACTIVE FLYASH PILE
CONCENTRATIONS OF DETECTED ANALYTES
ABOVE BACKGROUND[a] IN GROUNDWATER - 1000 SERIES
PHASE I FIELD INVESTIGATION
OPERABLE UNIT 2 REMEDIAL INVESTIGATION
FERNALD ENVIRONMENTAL MANAGEMENT PROJECT

SAMPLE LOCATION	SAMPLE ID	SAMPLE INTERVALS	SAMPLE DATE	PARAMETER	FILTER FLAG	RESULTS	VAL QUAL	BACKGROUND	UNITS
METALS									
1047	003102	-	20-APR-88	Magnesium	FLTR	50.800	-	49.627	mg/L
1047	003855	-	22-JAN-89	Cadmium	FLTR	.009	-	.007	mg/L
1047	003855	-	22-JAN-89	Magnesium	FLTR	53.800	-	49.627	mg/L
1711	047005	-	11-JUN-92	Calcium	FLTR	233.000	-	125.574	mg/L
1711	047005	-	11-JUN-92	Cobalt	FLTR	.028	-	0	mg/L
1711	047005	-	11-JUN-92	Iron	FLTR	11.300	-	10.965	mg/L
1711	047005	-	11-JUN-92	Manganese	FLTR	3.760	-	.165	mg/L
1711	047005	-	11-JUN-92	Nickel	FLTR	2.430	-	.026	mg/L
1711	047005	-	11-JUN-92	Silicon	FLTR	19.200	-	0	mg/L
1711	047005	-	11-JUN-92	Potassium	FLTR	34.000	-	29.736	mg/L
1711	047005	-	11-JUN-92	Thallium	FLTR	.422	J	0	mg/L
1711	047005	-	11-JUN-92	Sodium	FLTR	59.500	-	49.178	mg/L
1711	047005	-	11-JUN-92	Molybdenum	FLTR	.088	-	.028	mg/L
1711	047009	-	19-JUN-92	Calcium	UNKN	213.000	-	125.574	mg/L
1711	047009	-	19-JUN-92	Cobalt	UNKN	.073	-	0	mg/L
1711	047009	-	19-JUN-92	Iron	UNKN	25.500	-	10.965	mg/L
1711	047009	-	19-JUN-92	Molybdenum	UNKN	.147	-	.028	mg/L
1711	047009	-	19-JUN-92	Silicon	UNKN	20.100	-	0	mg/L
1711	047009	-	19-JUN-92	Nickel	UNKN	1.020	-	.026	mg/L
1711	047009	-	19-JUN-92	Thallium	UNKN	.435	J	0	mg/L
1711	047009	-	19-JUN-92	Manganese	UNKN	3.850	-	.165	mg/L
RADIONUCLIDES									
1047	003102	-	20-APR-88	U-234	*U	3.700	J	1.9	pCi/L
1047	003102	-	20-APR-88	U-238	*U	2.500	J	1.07	pCi/L
1047	003369	-	24-JUL-88	TH-TOTAL	*U	5.000	J	3	ug/L
1047	003369	-	24-JUL-88	U-234	*U	7.400	J	1.9	pCi/L
1047	003369	-	24-JUL-88	U-238	*U	3.200	J	1.07	pCi/L
1047	003369	-	24-JUL-88	U-TOTAL	*U	9.000	-	4	ug/L
1047	003648	-	23-OCT-88	TH-228	UNKN	1.100	-	1.04	pCi/L
1047	003648	-	23-OCT-88	TH-232	UNKN	1.100	J	0	pCi/L
1047	003648	-	23-OCT-88	TH-TOTAL	UNKN	10.000	-	3	ug/L

See footnotes at end of table

TABLE E-2H
(Continued)

SAMPLE LOCATION	SAMPLE ID	SAMPLE INTERVALS	SAMPLE DATE	PARAMETER	FILTER FLAG	RESULTS	VAL QUAL	BACKGROUND	UNITS
RADIONUCLIDES (Continued)									
1047	003648	-	23-OCT-88	U-234	UNKN	7.300	J	1.9	pCi/L
1047	003648	-	23-OCT-88	U-238	UNKN	3.600	J	1.07	pCi/L
1047	003855	-	22-JAN-89	U-234	*U	3.700	-	1.9	pCi/L
1047	003855	-	22-JAN-89	U-238	*U	2.100	-	1.07	pCi/L
1047	003855	-	22-JAN-89	U-TOTAL	*U	6.000	-	4	ug/L
1047	066830	-	12-DEC-89	U-234	UNKN	3.990	-	1.9	pCi/L
1047	066830	-	12-DEC-89	U-TOTAL	UNKN	10.300	-	4	ug/L
1047	066830	-	12-DEC-89	U-238	UNKN	2.810	-	1.07	pCi/L
GENERAL CHEMISTRY									
1047	003855	-	22-JAN-89	Phosphorus	UNFL	.400	-	.223	mg/L
1047	003855	-	22-JAN-89	Sulfate	UNFL	180.000	-	141.894	mg/L
1047	003855	-	22-JAN-89	Total Kjeldahl Nitrogen	UNFL	.200	-	0	mg/L
1047	003855	-	22-JAN-89	Total Organic Nitrogen	UNFL	.200	-	0	mg/L

[a]Background concentrations established for metals are filtered while all other background parameters are unfiltered

FLTR = Filtered sample; filtered status identified on Request for Analysis/Chain of Custody

UNFL = Unfiltered sample; filtered status identified on Request for Analysis/Chain of Custody

UNKN = Unknown; filtered status could not be determined.

*U = Unfiltered sample; filtered status not identified on Request for Analysis/Chain of Custody; determination based upon other field investigation documentation.

TABLE E-2I

INACTIVE FLYASH PILE
CONCENTRATIONS OF DETECTED ANALYTES
ABOVE BACKGROUND[a] IN GROUNDWATER - 1000 SERIES
PHASE II FIELD INVESTIGATION
OPERABLE UNIT 2 REMEDIAL INVESTIGATION
FERNALD ENVIRONMENTAL MANAGEMENT PROJECT

SAMPLE LOCATION	SAMPLE ID	SAMPLE INTERVALS	SAMPLE DATE	PARAMETER	FILTER FLAG	RESULTS	VAL QUAL	BACKGROUND	UNITS
METALS									
1047	110892	-	27-APR-93	Magnesium	FLTR	50.600	-	49.627	mg/L
1047	110892	-	27-APR-93	Silicon	FLTR	6.220	-	0	mg/L
RADIONUCLIDES									
1047	110892	-	27-APR-93	RA-228	UNFL	5.930	J	5.2	pCi/L
1047	110892	-	27-APR-93	U-TOTAL	UNFL	5.360	-	4	ug/L
1047	110892	-	27-APR-93	U-238	UNFL	1.620	-	1.07	pCi/L
1047	110892	-	27-APR-93	U-234	UNFL	2.330	-	1.9	pCi/L
GENERAL CHEMISTRY									
1047	110892	-	27-APR-93	Phosphorus	UNFL	.640	-	.223	mg/kg
1047	110892	-	27-APR-93	Sulfate	UNFL	166.900	-	141.894	mg/kg
1047	110892	-	27-APR-93	Total Kjeldahl Nitrogen	UNFL	.410	-	0	mg/kg
1047	110892	-	27-APR-93	Total Organic Carbon	UNFL	1.190	-	0	mg/kg
1047	110892	-	27-APR-93	Total Organic Nitrogen	UNFL	.410	-	0	mg/kg

[a]Background concentrations established for metals are filtered while all other background parameters are unfiltered

FLTR = Filtered sample; filtered status identified on Request for Analysis/Chain of Custody

UNFL = Unfiltered sample; filtered status identified on Request for Analysis/Chain of Custody

TABLE E-2J

INACTIVE FLYASH PILE
CONCENTRATIONS OF DETECTED ANALYTES
ABOVE BACKGROUND[a] IN GROUNDWATER - 2000 SERIES
PHASE I FIELD INVESTIGATION
OPERABLE UNIT 2 REMEDIAL INVESTIGATION
FERNALD ENVIRONMENTAL MANAGEMENT PROJECT

SAMPLE LOCATION	SAMPLE ID	SAMPLE INTERVALS	SAMPLE DATE	PARAMETER	FILTER FLAG	RESULTS	VAL QUAL	BACKGROUND	UNITS
METALS									
1016	003062	-	28-MAR-88	Calcium	UNKN	198.000	-	135.163	mg/L
1016	003906	-	26-FEB-89	Calcium	FLTR	180.000	-	135.163	mg/L
2016	004152	-	26-JUL-89	Aluminum	UNKN	.374	-	.184	mg/L
2016	004213	-	04-MAR-90	Aluminum	FLTR	.279	-	.184	mg/L
2016	004213	-	04-MAR-90	Chromium	FLTR	.127	-	.042	mg/L
RADIONUCLIDES									
1016	003906	-	26-FEB-89	U-234	*U	2.500	-	1.9	pCi/L
1016	003906	-	26-FEB-89	U-238	*U	2.600	-	.9	pCi/L
1016	003906	-	26-FEB-89	U-TOTAL	*U	9.000	J	2.92	ug/L
2016	003063	-	28-MAR-88	U-234	*U	7.700	J	1.9	pCi/L
2016	003063	-	28-MAR-88	U-238	*U	6.200	J	.9	pCi/L
2016	003434	-	03-AUG-88	U-234	*U	5.300	J	1.9	pCi/L
2016	003434	-	03-AUG-88	U-238	*U	6.400	J	.9	pCi/L
2016	003434	-	03-AUG-88	U-TOTAL	*U	18.000	-	2.92	ug/L
2016	003685	-	04-NOV-88	U-234	*U	4.600	-	1.9	pCi/L
2016	003685	-	04-NOV-88	U-238	*U	5.600	J	.9	pCi/L
2016	003685	-	04-NOV-88	U-TOTAL	*U	17.000	-	2.92	ug/L
2016	003883	-	07-FEB-89	U-234	*U	6.600	-	1.9	pCi/L
2016	003883	-	07-FEB-89	U-TOTAL	*U	22.000	J	2.92	ug/L
2016	003883	-	07-FEB-89	U-238	*U	8.000	-	.9	pCi/L
2016	004152	-	26-JUL-89	U-234	UNKN	5.100	-	1.9	pCi/L
2016	004152	-	26-JUL-89	U-TOTAL	UNKN	17.000	-	2.92	ug/L
2016	004152	-	26-JUL-89	U-238	N/A	5.800	-	.9	pCi/L
2016	004213	-	04-MAR-90	U-234	*U	4.280	-	1.9	pCi/L
2016	004213	-	04-MAR-90	U-238	*U	5.030	-	.9	pCi/L
2016	004213	-	04-MAR-90	U-TOTAL	*U	29.400	J	2.92	ug/L
2047	003998	-	22-JAN-89	U-234	*U	5.100	-	1.9	pCi/L
2047	003998	-	22-JAN-89	U-TOTAL	*U	15.000	-	2.92	ug/L
2047	003998	-	22-JAN-89	U-238	*U	4.500	-	.9	pCi/L
2047	004093	-	02-MAY-89	U-234	*U	3.200	-	1.9	pCi/L
2047	004093	-	02-MAY-89	U-238	*U	3.400	-	.9	pCi/L
2047	004093	-	02-MAY-89	U-TOTAL	*U	10.000	-	2.92	ug/L

See footnotes at end of table

TABLE E-2J
(Continued)

SAMPLE LOCATION	SAMPLE ID	SAMPLE INTERVALS	SAMPLE DATE	PARAMETER	FILTER FLAG	RESULTS	VAL QUAL	BACKGROUND	UNITS
RADIONUCLIDES (Continued)									
2047	004160	-	28-JUL-89	U-234	*U	3.700	-	1.9	pCi/L
2047	004160	-	28-JUL-89	U-TOTAL	*U	9.000	-	2.92	ug/L
2047	004160	-	28-JUL-89	U-238	*U	3.800	-	.9	pCi/L
2047	004220	-	03-APR-90	U-234	UNKN	4.720	J	1.9	pCi/L
2047	004220	-	03-APR-90	U-238	UNKN	4.660	J	.9	pCi/L
2047	004220	-	03-APR-90	U-TOTAL	UNKN	13.800	-	2.92	ug/L
2402	038304	-	28-JAN-92	U-234	U	7.730	-	1.9	pCi/L
2402	038304	-	28-JAN-92	U-238	UNKN	9.970	-	.9	pCi/L
2402	038304	-	28-JAN-92	U-TOTAL	UNKN	27.300	-	2.92	ug/L
VOLATILE ORGANICS									
1016	003062	-	28-MAR-88	1,1,1-Trichloroethane	UNFL	2.000	J	0	ug/L
SEMIVOLATILE ORGANICS									
2016	003063	-	28-MAR-88	bis(2-Ethylhexyl) phthalate	UNFL	4.000	J	0	ug/L
GENERAL CHEMISTRY									
1016	003906	-	26-FEB-89	Total Kjeldahl Nitrogen	UNFL	1.200	-	0	mg/L
1016	003906	-	26-FEB-89	Total Organic Halides	UNFL	.070	-	.021	mg/L
1016	003906	-	26-FEB-89	Total Organic Nitrogen	UNFL	.900	-	.652	mg/L
2016	003685	-	04-NOV-88	Total Kjeldahl Nitrogen	UNFL	.600	J	0	mg/L
2016	003883	-	07-FEB-89	Total Kjeldahl Nitrogen	UNFL	.181	J	0	mg/L
2047	004093	-	02-MAY-89	Phosphorus	UNFL	.758	-	.693	mg/L
2047	004093	-	02-MAY-89	Total Organic Halides	UNFL	.033	-	.021	mg/L
2047	004093	-	02-MAY-89	Total Kjeldahl Nitrogen	UNFL	.411	-	0	mg/L
2047	004160	-	28-JUL-89	Total Kjeldahl Nitrogen	UNFL	.160	-	0	mg/L

[a]Background concentrations established for metals are filtered while all other background parameters are unfiltered

FLTR = Filtered sample; filtered status identified on Request for Analysis/Chain of Custody

UNFL = Unfiltered sample; filtered status identified on Request for Analysis/Chain of Custody

UNKN = Unknown; filtered status could not be determined.

*F = Filtered sample; filtered status not identified on Request for Analysis/Chain of Custody; determination based upon other field investigation documentation.

*U = Unfiltered sample; filtered status not identified on Request for Analysis/Chain of Custody; determination based upon other field investigation documentation.

N/A = Not applicable

0 61

5174

TABLE E-2K

INACTIVE FLYASH PILE
CONCENTRATIONS OF DETECTED ANALYTES
ABOVE BACKGROUND[a] IN GROUNDWATER - 2000 SERIES
PHASE II FIELD INVESTIGATION
OPERABLE UNIT 2 REMEDIAL INVESTIGATION
FERNALD ENVIRONMENTAL MANAGEMENT PROJECT

SAMPLE LOCATION	SAMPLE ID	SAMPLE INTERVALS	SAMPLE DATE	PARAMETER	FILTER FLAG	RESULTS	VAL QUAL	BACKGROUND	UNITS
METALS									
2016	111996	-	30-APR-93	Aluminum	UNFL	.366	-	.184	mg/L
2402	116225	-	05-MAY-93	Aluminum	UNFL	.676	-	.184	mg/L
RADIONUCLIDES									
2016	111996	-	30-APR-93	GROSS ALPHA	UNFL	6.990	J	0	pCi/L
2016	111996	-	30-APR-93	GROSS BETA	UNFL	9.340	J	0	pCi/L
2016	111996	-	30-APR-93	U-234	UNFL	6.020	-	1.9	pCi/L
2016	111996	-	30-APR-93	U-238	UNFL	6.500	-	.9	pCi/L
2016	111996	-	30-APR-93	U-TOTAL	UNFL	17.100	-	2.92	ug/L
2016	111996	-	30-APR-93	U-235/236	UNFL	.460	J	0	pCi/L
2016	111996	-	30-APR-93	NP-237	UNFL	.710	N	0	pCi/L
2016	111996	-	30-APR-93	PU-238	UNFL	.160	J	0	pCi/L
2016	111996	-	30-APR-93	TH-232	UNFL	.140	J	0	pCi/L
2047	110894	-	27-APR-93	GROSS BETA	FLTR	5.400	J	0	pCi/L
2047	110894	-	27-APR-93	U-TOTAL	FLTR	9.510	-	2.92	ug/L
2047	110894	-	27-APR-93	U-238	FLTR	3.380	-	.9	pCi/L
2047	110894	-	27-APR-93	U-234	FLTR	3.740	-	1.9	pCi/L
2047	110894	-	27-APR-93	U-235/236	FLTR	.150	J	0	pCi/L
2402	116225	-	05-MAY-93	GROSS ALPHA	UNFL	9.520	J	0	pCi/L
2402	116225	-	05-MAY-93	GROSS BETA	UNFL	7.930	J	0	pCi/L
2402	116225	-	05-MAY-93	U-TOTAL	UNFL	5.620	-	2.92	ug/L
2402	116225	-	05-MAY-93	U-238	UNFL	3.180	-	.9	pCi/L
2402	116225	-	05-MAY-93	U-235/236	UNFL	.150	J	0	pCi/L
2402	116225	-	05-MAY-93	U-234	UNFL	2.170	-	1.9	pCi/L
2402	116225	-	05-MAY-93	PU-239/240	UNFL	.060	J	0	pCi/L
2402	116225	-	05-MAY-93	NP-237	UNFL	.280	N	0	pCi/L
2402	116226	-	05-MAY-93	NP-237	FLTR	.300	N	0	pCi/L
2402	116226	-	05-MAY-93	U-TOTAL	FLTR	15.200	-	2.92	ug/L
2402	116226	-	05-MAY-93	U-238	FLTR	5.890	-	.9	pCi/L
2402	116226	-	05-MAY-93	U-235/236	FLTR	.160	-	0	pCi/L
2402	116226	-	05-MAY-93	U-234	FLTR	4.540	-	1.9	pCi/L
2955	113801	-	22-JUN-93	GROSS ALPHA	UNFL	6.970	J	0	pCi/L
2955	113801	-	22-JUN-93	GROSS BETA	UNFL	5.050	J	0	pCi/L

See footnotes at end of table

TABLE E-2K
(Continued)

SAMPLE LOCATION	SAMPLE ID	SAMPLE INTERVALS	SAMPLE DATE	PARAMETER	FILTER FLAG	RESULTS	VAL QUAL	BACKGROUND	UNITS
RADIONUCLIDES (Continued)									
2955	113801	-	22-JUN-93	U-235/236	UNFL	.698	J	0	pCi/L
2955	113801	-	22-JUN-93	U-TOTAL	FLTR	8.110	-	2.92	ug/L
2955	113801	-	22-JUN-93	U-TOTAL	UNFL	8.190	-	2.92	ug/L
2955	113801	-	22-JUN-93	U-238	FLTR	2.750	-	.9	pCi/L
2955	113801	-	22-JUN-93	U-238	UNFL	3.010	-	.9	pCi/L
2955	113801	-	22-JUN-93	U-234	UNFL	2.990	-	1.9	pCi/L
2955	113801	-	22-JUN-93	U-234	FLTR	2.570	-	1.9	pCi/L
2955	113801	-	22-JUN-93	GROSS BETA	FLTR	5.120	J	0	pCi/L
2955	113801	-	22-JUN-93	U-235/236	FLTR	.103	J	0	pCi/L
VOLATILE ORGANICS									
2402	116225	-	05-MAY-93	Carbon disulfide	UNFL	26.000	J	0	ug/L
2955	113801	-	22-JUN-93	1,1,1-Trichloroethane	UNFL	1.000	J	0	ug/L
SEMIVOLATILE ORGANICS									
2955	113801	-	22-JUN-93	Butyl benzyl phthalate	UNFL	1.000	J	0	ug/L
GENERAL CHEMISTRY									
2016	111996	-	30-APR-93	Total Kjeldahl Nitrogen	UNFL	.120	-	0	mg/L
2402	116225	-	05-MAY-93	Total Kjeldahl Nitrogen	UNFL	3.010	-	0	mg/L
2402	116225	-	05-MAY-93	Total Organic Nitrogen	UNFL	2.900	-	.652	mg/L
2955	113801	-	22-JUN-93	Total Kjeldahl Nitrogen	UNFL	.120	-	0	mg/L

[a]Background concentrations established for metals are filtered while all other background parameters are unfiltered.

FLTR = Filtered sample; filtered status identified on Request for Analysis/Chain of Custody

UNFL = Unfiltered sample; filtered status identified on Request for Analysis/Chain of Custody

TABLE E-2L

INACTIVE FLYASH PILE
CONCENTRATIONS OF DETECTED ANALYTES
ABOVE BACKGROUND[a] IN GROUNDWATER - 3000 AND 4000 SERIES
PHASE I FIELD INVESTIGATION
OPERABLE UNIT 2 REMEDIAL INVESTIGATION
FERNALD ENVIRONMENTAL MANAGEMENT PROJECT

SAMPLE LOCATION	SAMPLE ID	SAMPLE INTERVALS	SAMPLE DATE	PARAMETER	FILTER FLAG	RESULTS	VAL QUAL	BACKGROUND	UNITS
METALS									
3016	003082	-	08-APR-88	Lead	FLTR	.050	-	.029	mg/L
4016	003996	-	20-JAN-89	Manganese	FLTR	1.020	-	.8	mg/L
4016	004090	-	01-MAY-89	Manganese	FLTR	.858	-	.8	mg/L
RADIONUCLIDES									
3016	003082	-	08-APR-88	U-234	*U	5.300	J	1.9	pCi/L
3016	003082	-	08-APR-88	U-238	*U	4.400	J	.9	pCi/L
3016	003082	-	08-APR-88	U-TOTAL	*U	11.000	J	2.92	ug/L
3016	003435	-	03-AUG-88	U-234	*U	3.300	J	1.9	pCi/L
3016	003435	-	03-AUG-88	U-238	*U	3.500	J	.9	pCi/L
3016	003435	-	03-AUG-88	U-TOTAL	*U	9.000	-	2.92	ug/L
3016	003686	-	04-NOV-88	U-234	*U	3.300	-	1.9	pCi/L
3016	003686	-	04-NOV-88	U-238	*U	3.200	J	.9	pCi/L
3016	003686	-	04-NOV-88	U-TOTAL	*U	8.000	-	2.92	ug/L
3016	003882	-	07-FEB-89	U-234	*U	3.300	-	1.9	pCi/L
3016	003882	-	07-FEB-89	U-TOTAL	*U	7.000	J	2.92	ug/L
3016	003882	-	07-FEB-89	U-238	*U	2.900	-	.9	pCi/L
3016	004241	-	04-MAR-90	U-234	*U	3.050	-	1.9	pCi/L
3016	004241	-	04-MAR-90	U-TOTAL	*U	13.400	J	2.92	ug/L
3016	004241	-	04-MAR-90	U-238	*U	2.800	-	.9	pCi/L
GENERAL CHEMISTRY									
3016	003686	-	04-NOV-88	Total Kjeldahl Nitrogen	UNFL	.140	J	0	mg/L
3016	003882	-	07-FEB-89	Total Kjeldahl Nitrogen	UNFL	.202	J	0	mg/L
3402	038346	-	09-APR-92	Total Organic Carbon	UNKN	4.000	-	3.764	mg/L
3402	038346	-	09-APR-92	Total Organic Nitrogen	UNFL	1.000	J	.652	mg/L
4016	004090	-	01-MAY-89	Total Kjeldahl Nitrogen	UNFL	.172	-	0	mg/L

[a]Background concentrations established for metals are filtered while all other background parameters are unfiltered

FLTR = Filtered sample; filtered status identified on Request for Analysis/Chain of Custody

UNFL = Unfiltered sample; filtered status identified on Request for Analysis/Chain of Custody

UNKN = Unknown; filtered status could not be determined.

*U = Unfiltered sample; filtered status not identified on Request for Analysis/Chain of Custody; determination based upon other field investigation documentation.

TABLE E-3A

INACTIVE FLYASH PILE
RI/FS SURFACE SOIL RESULTS
OPERABLE UNIT 2 REMEDIAL INVESTIGATION
FERNALD ENVIRONMENTAL MANAGEMENT PROJECT

PHASE I - RADIOLOGICAL PARAMETERS

BORING NUMBER	N 478000 E 1379000		
SAMPLE NUMBER	005017		
	0 - 2		
SAMPLING DATE	09/02/87		
RADIOLOGICAL PARAMETERS	RESULTS	UNITS	VQ
CS-137	0.700	pci/g	R
NP-237	0.600	pci/g	R
PU-238	0.600	pci/g	R
PU-239/240	0.600	pci/g	R
RA-226	1.400	pci/g	R
RA-228	1.000	pci/g	R
RU-106	1.500	pci/g	R
SR-90	0.500	pci/g	R
TC-99	9.000	pci/g	R
TH-228	0.900	pci/g	R
TH-230	5.300	pci/g	R
TH-232	1.800	pci/g	R
U-234	5.100	pci/g	R
U-235/236	0.600	pci/g	R
U-238	4.900	pci/g	R

TABLE E-3A
(Continued)

PHASE II - RADIOLOGICAL PARAMETERS

BORING NUMBER	IFP-SS-01			IFP-SS-02			IFP-SS-03		
SAMPLE NUMBER	111790			111791			111792		
	0 - 0.5			0 - 0.5			0 - 0.5		
SAMPLING DATE	04/16/93			04/16/93			04/16/93		
RADIOLOGICAL PARAMETERS	RESULTS	UNITS	VQ	RESULTS	UNITS	VQ	RESULTS	UNITS	VQ
CS-137	0.101	pci/g	UJ	0.087	pci/g	J	0.062	pci/g	UJ
GROSS ALPHA	37.800	pci/g	-	20.100	pci/g	-	9.420	pci/g	UJ
GROSS BETA	30.800	pci/g	-	21.800	pci/g	-	11.900	pci/g	-
NP-237	0.589	pci/g	R	0.069	pci/g	R	0.030	pci/g	N
PU-238	0.422	pci/g	R	0.081	pci/g	J	0.057	pci/g	J
PU-239/240	0.183	pci/g	R	0.024	pci/g	UJ	0.034	pci/g	UJ
RA-226	2.700	pci/g	-	0.899	pci/g	-	0.523	pci/g	-
RA-228	2.620	pci/g	-	0.966	pci/g	-	0.415	pci/g	J
RU-106	0.838	pci/g	UJ	0.637	pci/g	UJ	0.553	pci/g	UJ
SR-90	1.140	pci/g	J	0.525	pci/g	J	0.345	pci/g	UJ
TC-99	0.316	pci/g	UJ	0.319	pci/g	UJ	0.342	pci/g	UJ
TH-228	2.710	pci/g	-	0.557	pci/g	R	0.397	µg/g	R
TH-230	2.770	pci/g	-	1.130	pci/g	R	0.411	µg/g	R
TH-232	2.330	pci/g	-	0.686	pci/g	R	0.382	µg/g	R
TH-TOTAL	21.400	µg/g	-	6.310	µg/g	R	3.020	µg/g	R
U-234	3.110	pci/g	-	1.320	pci/g	-	0.433	pci/g	J
U-235/236	0.122	pci/g	J	0.072	pci/g	J	0.038	pci/g	J
U-238	2.980	pci/g	-	1.440	pci/g	-	0.422	pci/g	J
U-TOTAL	12.300	mg/kg	-	5.010	mg/kg	-	0.824	mg/kg	J

TABLE E-3A
(Continued)

PHASE II - RADIOLOGICAL PARAMETERS

BORING NUMBER	IFP-SS-04			IFP-SS-05			IFP-SS-06		
SAMPLE NUMBER	111793			111794			111795		
	0 - 0.5			0 - 0.5			0 - 0.5		
SAMPLING DATE	04/16/93			04/16/93			04/16/93		
RADIOLOGICAL PARAMETERS	RESULTS	UNITS	VQ	RESULTS	UNITS	VQ	RESULTS	UNITS	VQ
CS-137	0.344	pci/g	-	0.641	pci/g	-	0.537	pci/g	-
GROSS ALPHA	60.200	pci/g	-	25.900	pci/g	-	39.200	pci/g	-
GROSS BETA	36.300	pci/g	-	36.300	pci/g	-	43.900	pci/g	-
NP-237	0.137	pci/g	N	0.041	pci/g	N	0.068	pci/g	R
PU-238	0.044	pci/g	UJ	0.044	pci/g	J	0.055	pci/g	UJ
PU-239/240	0.044	pci/g	UJ	0.021	pci/g	J	0.067	pci/g	UJ
RA-226	1.220	pci/g	-	1.050	pci/g	-	1.020	pci/g	-
RA-228	1.200	pci/g	-	0.827	pci/g	-	1.480	pci/g	-
RU-106	0.704	pci/g	UJ	0.816	pci/g	UJ	0.895	pci/g	UJ
SR-90	0.854	pci/g	J	0.629	pci/g	J	0.500	pci/g	UJ
TC-99	0.323	pci/g	UJ	0.336	pci/g	UJ	0.343	pci/g	UJ
TH-228	1.020	pci/g	R	0.790	pci/g	-	0.928	pci/g	R
TH-230	12.100	pci/g	R	2.200	pci/g	-	1.850	pci/g	R
TH-232	1.070	pci/g	R	0.841	pci/g	-	1.030	pci/g	R
TH-TOTAL	9.840	µg/g	R	7.740	µg/g	-	9.480	µg/g	R
U-234	6.180	pci/g	-	7.690	pci/g	-	10.600	pci/g	-
U-235/236	0.276	pci/g	J	0.335	pci/g	-	0.602	pci/g	-
U-238	6.120	pci/g	-	7.560	pci/g	-	11.200	pci/g	-
U-TOTAL	19.700	mg/kg	-	20.400	mg/kg	-	32.100	mg/kg	-

TABLE E-3A
(Continued)

PHASE II - RADIOLOGICAL PARAMETERS

BORING NUMBER	IFP-SS-07		
SAMPLE NUMBER	111796		
	0 - 0.5		
SAMPLING DATE	04/16/93		
RADIOLOGICAL PARAMETERS	RESULTS	UNITS	VQ
CS-137	0.297	pci/g	-
GROSS ALPHA	28.200	pci/g	-
GROSS BETA	32.700	pci/g	-
NP-237	0.035	pci/g	N
PU-238	0.013	pci/g	UJ
PU-239/240	0.027	pci/g	UJ
RA-226	1.040	pci/g	-
RA-228	0.758	pci/g	-
RU-106	0.810	pci/g	UJ
SR-90	0.770	pci/g	J
TC-99	0.312	pci/g	UJ
U-234	10.100	pci/g	-
U-235/236	0.433	pci/g	J
U-238	10.400	pci/g	-
U-TOTAL	31.100	mg/kg	-

TABLE E-3A
(Continued)

PHASE II - CHEMICAL PARAMETERS

BORING NUMBER	IFP-SS-01			IFP-SS-02			IFP-SS-03		
SAMPLE NUMBER	111790			111791			111792		
	0-0.5			0-0.5			0-0.5		
SAMPLING DATE	04/16/93			04/16/93			04/16/93		
CHEMICAL PARAMETERS	RESULTS	UNITS	L VQ	RESULTS	UNITS	L VQ	RESULTS	UNITS	L VQ
Inorganics									
Aluminum	4720.000	mg/kg	C -	5450.000	mg/kg	C -	1430.000	mg/kg	D -
Antimony	1.700	mg/kg	C U	1.100	mg/kg	C U	0.830	mg/kg	D UJ
Arsenic	33.200	mg/kg	C -	5.100	mg/kg	C -	1.900	mg/kg	D J
Barium	105.000	mg/kg	C -	46.800	mg/kg	C -	7.300	mg/kg	D -
Beryllium	2.100	mg/kg	C -	0.610	mg/kg	C -	0.330	mg/kg	D U
Cadmium	1.700	mg/kg	C U	1.100	mg/kg	C U	0.830	mg/kg	D U
Calcium	2730.000	mg/kg	C -	84000.000	mg/kg	C -	103000.000	mg/kg	D -
Chromium	8.300	mg/kg	C -	7.400	mg/kg	C -	2.500	mg/kg	D -
Cobalt	10.200	mg/kg	C -	4.100	mg/kg	C -	2.900	mg/kg	D -
Copper	41.100	mg/kg	C -	12.000	mg/kg	C -	4.800	mg/kg	D -
Cyanide	0.700	mg/kg	C -	0.120	mg/kg	C U	0.110	mg/kg	D U
Iron	2770.000	mg/kg	C -	11600.000	mg/kg	C -	5140.000	mg/kg	D -
Lead	31.300	mg/kg	C -	10.100	mg/kg	C -	3.200	mg/kg	D -
Magnesium	741.000	mg/kg	C -	21300.000	mg/kg	C -	16400.000	mg/kg	D -
Manganese	38.000	mg/kg	C -	358.000	mg/kg	C -	331.000	mg/kg	D -
Mercury	0.170	mg/kg	C U	0.110	mg/kg	C U	0.090	mg/kg	D U
Molybdenum	7.200	mg/kg	C -	4.500	mg/kg	C U	3.300	mg/kg	D U
Nickel	19.700	mg/kg	C -	11.200	mg/kg	C -	5.800	mg/kg	D -
Potassium	1170.000	mg/kg	C -	1100.000	mg/kg	C -	221.000	mg/kg	D -
Selenium	8.200	mg/kg	C -	0.450	mg/kg	C U	0.360	mg/kg	D U
Silicon	426.000	mg/kg	C -	674.000	mg/kg	C -	219.000	mg/kg	D -
Silver	3.300	mg/kg	C U	3.300	mg/kg	C -	1.700	mg/kg	D U
Sodium	74.500	mg/kg	C -	123.000	mg/kg	C -	77.000	mg/kg	D -
Thallium	2.100	mg/kg	C U	0.490	mg/kg	C U	0.360	mg/kg	D U
Vanadium	32.300	mg/kg	C -	15.100	mg/kg	C -	4.900	mg/kg	D -
Zinc	34.500	mg/kg	C -	31.100	mg/kg	C -	12.600	mg/kg	D -
Volatile Organics									
1,1,1-Trichloroethane	17.000	ug/kg	C U	11.000	ug/kg	C U	11.000	ug/kg	D U
1,1,2,2-Tetrachloroethane	17.000	ug/kg	C U	11.000	ug/kg	C U	11.000	ug/kg	D U
1,1,2-Trichloroethane	17.000	ug/kg	C U	11.000	ug/kg	C U	11.000	ug/kg	D U
1,1-Dichloroethane	17.000	ug/kg	C U	11.000	ug/kg	C U	11.000	ug/kg	D U
1,1-Dichloroethene	17.000	ug/kg	C U	11.000	ug/kg	C U	11.000	ug/kg	D U
1,2-Dichloroethane	17.000	ug/kg	C U	11.000	ug/kg	C U	11.000	ug/kg	D U
1,2-Dichloroethene	17.000	ug/kg	C U	11.000	ug/kg	C U	11.000	ug/kg	D U
1,2-Dichloropropane	17.000	ug/kg	C U	11.000	ug/kg	C U	11.000	ug/kg	D U
2-Butanone	17.000	ug/kg	C U	11.000	ug/kg	C U	11.000	ug/kg	D U
2-Hexanone	17.000	ug/kg	C UJ	11.000	ug/kg	C UJ	11.000	ug/kg	D UJ
4-Methyl-2-pentanone	17.000	ug/kg	C UJ	11.000	ug/kg	C UJ	11.000	ug/kg	D UJ
Acetone	17.000	ug/kg	C U	11.000	ug/kg	C U	11.000	ug/kg	D U
Benzene	17.000	ug/kg	C U	11.000	ug/kg	C U	11.000	ug/kg	D U

TABLE E-3A
(Continued)

PHASE II - CHEMICAL PARAMETERS

BORING NUMBER	IFP-SS-01				IFP-SS-02				IFP-SS-03			
SAMPLE NUMBER	111790				111791				111792			
	0-0.5				0-0.5				0-0.5			
SAMPLING DATE	04/16/93				04/16/93				04/16/93			
CHEMICAL PARAMETERS	RESULTS	UNITS	L	VQ	RESULTS	UNITS	L	VQ	RESULTS	UNITS	L	VQ
Volatile Organics												
Bromodichloromethane	17.000	ug/kg	C	U	11.000	ug/kg	C	U	11.000	ug/kg	D	U
Bromoform	17.000	ug/kg	C	U	11.000	ug/kg	C	U	11.000	ug/kg	D	U
Bromomethane	17.000	ug/kg	C	UJ	11.000	ug/kg	C	UJ	11.000	ug/kg	D	UJ
Carbon Tetrachloride	17.000	ug/kg	C	U	11.000	ug/kg	C	U	11.000	ug/kg	D	U
Carbon disulfide	17.000	ug/kg	C	U	11.000	ug/kg	C	U	11.000	ug/kg	D	U
Chlorobenzene	17.000	ug/kg	C	U	11.000	ug/kg	C	U	11.000	ug/kg	D	U
Chloroethane	17.000	ug/kg	C	UJ	11.000	ug/kg	C	UJ	11.000	ug/kg	D	UJ
Chloroform	17.000	ug/kg	C	U	11.000	ug/kg	C	U	11.000	ug/kg	D	U
Chloromethane	17.000	ug/kg	C	U	11.000	ug/kg	C	U	11.000	ug/kg	D	U
Dibromochloromethane	17.000	ug/kg	C	U	11.000	ug/kg	C	U	11.000	ug/kg	D	U
Ethylbenzene	17.000	ug/kg	C	U	11.000	ug/kg	C	U	11.000	ug/kg	D	U
Methylene chloride	28.000	ug/kg	C	U	11.000	ug/kg	C	U	11.000	ug/kg	D	U
Styrene	17.000	ug/kg	C	U	11.000	ug/kg	C	U	11.000	ug/kg	D	U
Tetrachloroethene	17.000	ug/kg	C	U	11.000	ug/kg	C	U	11.000	ug/kg	D	U
Toluene	55.000	ug/kg	C	-	3.000	ug/kg	C	J	5.000	ug/kg	D	J
Trichloroethene	17.000	ug/kg	C	U	11.000	ug/kg	C	U	11.000	ug/kg	D	U
Vinyl Acetate	17.000	ug/kg	C	UJ	11.000	ug/kg	C	UJ	11.000	ug/kg	D	UJ
Vinyl chloride	17.000	ug/kg	C	U	11.000	ug/kg	C	U	11.000	ug/kg	D	U
Xylenes, Total	17.000	ug/kg	C	U	11.000	ug/kg	C	U	11.000	ug/kg	D	U
cis-1,3-Dichloropropene	17.000	ug/kg	C	U	11.000	ug/kg	C	U	11.000	ug/kg	D	U
trans-1,3-Dichloropropene	17.000	ug/kg	C	U	11.000	ug/kg	C	U	11.000	ug/kg	D	U
Semivolatile Organics												
1,2,4-Trichlorobenzene	560.000	ug/kg	C	U	390.000	ug/kg	C	U	360.000	ug/kg	D	U
1,2-Dichlorobenzene	560.000	ug/kg	C	U	390.000	ug/kg	C	U	360.000	ug/kg	D	U
1,3-Dichlorobenzene	560.000	ug/kg	C	U	390.000	ug/kg	C	U	360.000	ug/kg	D	U
1,4-Dichlorobenzene	560.000	ug/kg	C	U	390.000	ug/kg	C	U	360.000	ug/kg	D	U
2,4,5-Trichlorophenol	1400.000	ug/kg	C	U	950.000	ug/kg	C	U	870.000	ug/kg	D	U
2,4,6-Trichlorophenol	560.000	ug/kg	C	U	390.000	ug/kg	C	U	360.000	ug/kg	D	U
2,4-Dichlorophenol	560.000	ug/kg	C	U	390.000	ug/kg	C	U	360.000	ug/kg	D	U
2,4-Dimethylphenol	560.000	ug/kg	C	U	390.000	ug/kg	C	U	360.000	ug/kg	D	U
2,4-Dinitrophenol	1400.000	ug/kg	C	UJ	950.000	ug/kg	C	UJ	870.000	ug/kg	D	UJ
2,4-Dinitrotoluene	560.000	ug/kg	C	U	390.000	ug/kg	C	U	360.000	ug/kg	D	U
2,6-Dinitrotoluene	560.000	ug/kg	C	U	390.000	ug/kg	C	U	360.000	ug/kg	D	U
2-Chloronaphthalene	560.000	ug/kg	C	U	390.000	ug/kg	C	U	360.000	ug/kg	D	U
2-Chlorophenol	560.000	ug/kg	C	U	390.000	ug/kg	C	U	360.000	ug/kg	D	U
2-Methylnaphthalene	560.000	ug/kg	C	U	390.000	ug/kg	C	U	360.000	ug/kg	D	U
2-Methylphenol	560.000	ug/kg	C	U	390.000	ug/kg	C	U	360.000	ug/kg	D	U
2-Nitroaniline	1400.000	ug/kg	C	U	950.000	ug/kg	C	U	870.000	ug/kg	D	U
2-Nitrophenol	560.000	ug/kg	C	U	390.000	ug/kg	C	U	360.000	ug/kg	D	U
3,3'-Dichlorobenzidine	560.000	ug/kg	C	U	390.000	ug/kg	C	U	360.000	ug/kg	D	U

TABLE E-3A
(Continued)

PHASE II - CHEMICAL PARAMETERS

BORING NUMBER	IFP-SS-01				IFP-SS-02				IFP-SS-03			
SAMPLE NUMBER	111790				111791				111792			
	0-0.5				0-0.5				0-0.5			
SAMPLING DATE	04/16/93				04/16/93				04/16/93			
CHEMICAL PARAMETERS	RESULTS	UNITS	L	VQ	RESULTS	UNITS	L	VQ	RESULTS	UNITS	L	VQ
Semivolatile Organics												
3-Nitroaniline	1400.000	ug/kg	C	U	950.000	ug/kg	C	U	870.000	ug/kg	D	U
4,6-Dinitro-2-methylphenol	1400.000	ug/kg	C	R	950.000	ug/kg	C	R	870.000	ug/kg	D	R
4-Bromophenyl phenyl ether	560.000	ug/kg	C	UJ	390.000	ug/kg	C	UJ	360.000	ug/kg	D	UJ
4-Chloro-3-methylphenol	560.000	ug/kg	C	U	390.000	ug/kg	C	U	360.000	ug/kg	D	U
4-Chlorophenylphenyl ether	560.000	ug/kg	C	U	390.000	ug/kg	C	U	360.000	ug/kg	D	U
4-Methylphenol	560.000	ug/kg	C	U	390.000	ug/kg	C	U	360.000	ug/kg	D	U
4-Nitroaniline	1400.000	ug/kg	C	R	950.000	ug/kg	C	R	870.000	ug/kg	D	R
4-Nitrophenol	1400.000	ug/kg	C	U	950.000	ug/kg	C	U	870.000	ug/kg	D	U
Acenaphthene	560.000	ug/kg	C	U	390.000	ug/kg	C	U	360.000	ug/kg	D	U
Acenaphthylene	560.000	ug/kg	C	U	390.000	ug/kg	C	U	360.000	ug/kg	D	U
Anthracene	560.000	ug/kg	C	U	390.000	ug/kg	C	U	360.000	ug/kg	D	U
Benzo(a)anthracene	560.000	ug/kg	C	U	390.000	ug/kg	C	U	360.000	ug/kg	D	U
Benzo(a)pyrene	560.000	ug/kg	C	U	390.000	ug/kg	C	U	360.000	ug/kg	D	U
Benzo(b)fluoranthene	560.000	ug/kg	C	U	390.000	ug/kg	C	U	360.000	ug/kg	D	U
Benzo(g,h,i)perylene	560.000	ug/kg	C	UJ	390.000	ug/kg	C	UJ	360.000	ug/kg	D	U
Benzo(k)fluoranthene	560.000	ug/kg	C	U	390.000	ug/kg	C	U	360.000	ug/kg	D	U
Benzoic acid	2700.000	ug/kg	C	UJ	1900.000	ug/kg	C	UJ	1700.000	ug/kg	D	UJ
Benzyl alcohol	560.000	ug/kg	C	U	390.000	ug/kg	C	U	360.000	ug/kg	D	U
Butyl benzyl phthalate	560.000	ug/kg	C	U	390.000	ug/kg	C	U	360.000	ug/kg	D	U
Carbazole	560.000	ug/kg	C	U	390.000	ug/kg	C	U	360.000	ug/kg	D	U
Chrysene	560.000	ug/kg	C	U	390.000	ug/kg	C	U	360.000	ug/kg	D	U
Di-n-butyl phthalate	560.000	ug/kg	C	U	390.000	ug/kg	C	U	360.000	ug/kg	D	U
Di-n-octyl phthalate	560.000	ug/kg	C	U	390.000	ug/kg	C	U	360.000	ug/kg	D	U
Dibenzo(a,h)anthracene	560.000	ug/kg	C	U	390.000	ug/kg	C	U	360.000	ug/kg	D	U
Dibenzofuran	560.000	ug/kg	C	U	390.000	ug/kg	C	U	360.000	ug/kg	D	U
Diethyl phthalate	560.000	ug/kg	C	U	390.000	ug/kg	C	U	360.000	ug/kg	D	U
Dimethyl phthalate	560.000	ug/kg	C	U	390.000	ug/kg	C	U	360.000	ug/kg	D	U
Fluoranthene	560.000	ug/kg	C	U	390.000	ug/kg	C	U	360.000	ug/kg	D	U
Fluorene	560.000	ug/kg	C	U	390.000	ug/kg	C	U	360.000	ug/kg	D	U
Hexachlorobenzene	560.000	ug/kg	C	U	390.000	ug/kg	C	U	360.000	ug/kg	D	U
Hexachlorobutadiene	560.000	ug/kg	C	U	390.000	ug/kg	C	U	360.000	ug/kg	D	U
Hexachlorocyclopentadiene	560.000	ug/kg	C	UJ	390.000	ug/kg	C	UJ	360.000	ug/kg	D	UJ
Hexachloroethane	560.000	ug/kg	C	U	390.000	ug/kg	C	U	360.000	ug/kg	D	U
Indeno(1,2,3-cd)pyrene	560.000	ug/kg	C	U	390.000	ug/kg	C	U	360.000	ug/kg	D	U
Isophorone	560.000	ug/kg	C	U	390.000	ug/kg	C	U	360.000	ug/kg	D	U
N-Nitroso-di-n-propylamine	560.000	ug/kg	C	UJ	390.000	ug/kg	C	UJ	360.000	ug/kg	D	UJ
N-Nitrosodiphenylamine	560.000	ug/kg	C	U	390.000	ug/kg	C	U	360.000	ug/kg	D	U
Naphthalene	560.000	ug/kg	C	U	390.000	ug/kg	C	U	360.000	ug/kg	D	U
Nitrobenzene	560.000	ug/kg	C	U	390.000	ug/kg	C	U	360.000	ug/kg	D	U
Pentachlorophenol	1400.000	ug/kg	C	UJ	950.000	ug/kg	C	UJ	870.000	ug/kg	D	UJ
Phenanthrene	560.000	ug/kg	C	U	390.000	ug/kg	C	U	360.000	ug/kg	D	U
Phenol	560.000	ug/kg	C	U	390.000	ug/kg	C	U	360.000	ug/kg	D	U

TABLE E-3A
(Continued)

PHASE II - CHEMICAL PARAMETERS

BORING NUMBER	IFP-SS-01			IFP-SS-02			IFP-SS-03		
SAMPLE NUMBER	111790			111791			111792		
	0-0.5			0-0.5			0-0.5		
SAMPLING DATE	04/16/93			04/16/93			04/16/93		
CHEMICAL PARAMETERS	RESULTS	UNITS	L VQ	RESULTS	UNITS	L VQ	RESULTS	UNITS	L VQ
Semivolatile Organics									
Pyrene	560.000	ug/kg	C U	390.000	ug/kg	C U	360.000	ug/kg	D U
bis(2-Chloroethoxy)methane	560.000	ug/kg	C U	390.000	ug/kg	C U	360.000	ug/kg	D U
bis(2-Chloroethyl)ether	560.000	ug/kg	C U	390.000	ug/kg	C U	360.000	ug/kg	D U
bis(2-Chloroisopropyl) ether	560.000	ug/kg	C UJ	390.000	ug/kg	C UJ	360.000	ug/kg	D UJ
bis(2-Ethylhexyl) phthalate	560.000	ug/kg	C U	390.000	ug/kg	C U	360.000	ug/kg	D U
p-Chloroaniline	560.000	ug/kg	C U	390.000	ug/kg	C U	360.000	ug/kg	D U
Pesticide Organics/PCBs									
4,4'-DDD	5.600	ug/kg	C U	3.900	ug/kg	C U	3.500	ug/kg	D U
4,4'-DDE	5.600	ug/kg	C U	3.900	ug/kg	C U	3.500	ug/kg	D U
4,4'-DDT	5.600	ug/kg	C U	3.900	ug/kg	C U	3.500	ug/kg	D U
Aldrin	2.900	ug/kg	C U	2.000	ug/kg	C U	1.800	ug/kg	D U
Aroclor-1016	56.000	ug/kg	C U	39.000	ug/kg	C U	35.000	ug/kg	D U
Aroclor-1221	110.000	ug/kg	C U	79.000	ug/kg	C U	72.000	ug/kg	D U
Aroclor-1232	56.000	ug/kg	C U	39.000	ug/kg	C U	35.000	ug/kg	D U
Aroclor-1242	56.000	ug/kg	C U	39.000	ug/kg	C U	35.000	ug/kg	D U
Aroclor-1248	56.000	ug/kg	C U	39.000	ug/kg	C U	35.000	ug/kg	D U
Aroclor-1254	56.000	ug/kg	C U	39.000	ug/kg	C U	35.000	ug/kg	D U
Aroclor-1260	56.000	ug/kg	C U	39.000	ug/kg	C U	35.000	ug/kg	D U
Dieldrin	5.600	ug/kg	C U	3.900	ug/kg	C U	3.500	ug/kg	D U
Endosulfan II	5.600	ug/kg	C U	3.900	ug/kg	C U	3.500	ug/kg	D U
Endosulfan sulfate	5.600	ug/kg	C U	3.900	ug/kg	C U	3.500	ug/kg	D U
Endosulfan-I	2.900	ug/kg	C U	2.000	ug/kg	C U	1.800	ug/kg	D U
Endrin	5.600	ug/kg	C U	3.900	ug/kg	C U	3.500	ug/kg	D U
Endrin aldehyde	5.600	ug/kg	C U	3.900	ug/kg	C U	3.500	ug/kg	D U
Endrin ketone	5.600	ug/kg	C U	3.900	ug/kg	C U	3.500	ug/kg	D U
Heptachlor	2.900	ug/kg	C U	2.000	ug/kg	C U	1.800	ug/kg	D U
Heptachlor epoxide	2.900	ug/kg	C U	2.000	ug/kg	C U	1.800	ug/kg	D U
Methoxychlor	29.000	ug/kg	C U	20.000	ug/kg	C U	18.000	ug/kg	D U
Toxaphene	290.000	ug/kg	C U	200.000	ug/kg	C U	180.000	ug/kg	D U
alpha-BHC	2.900	ug/kg	C U	2.000	ug/kg	C U	1.800	ug/kg	D U
alpha-Chlordane	2.900	ug/kg	C U	2.000	ug/kg	C U	1.800	ug/kg	D U
beta-BHC	2.900	ug/kg	C U	2.000	ug/kg	C U	1.800	ug/kg	D U
delta-BHC	2.900	ug/kg	C U	2.000	ug/kg	C U	1.800	ug/kg	D U
gamma-BHC (Lindane)	2.900	ug/kg	C U	2.000	ug/kg	C U	1.800	ug/kg	D U
gamma-Chlordane	2.900	ug/kg	C U	2.000	ug/kg	C U	1.800	ug/kg	D U

TABLE E-3A
(Continued)

PHASE II - CHEMICAL PARAMETERS

BORING NUMBER	IFP-SS-04			IFP-SS-05			IFP-SS-06		
SAMPLE NUMBER	111793			111794			111795		
	0-0.5			0-0.5			0-0.5		
SAMPLING DATE	04/16/93			04/16/93			04/16/93		
CHEMICAL PARAMETERS	RESULTS	UNITS	L VQ	RESULTS	UNITS	L VQ	RESULTS	UNITS	L VQ
Inorganics									
Aluminum	8130.000	mg/kg	C -	9400.000	mg/kg	C -	10100.000	mg/kg	C -
Antimony	1.300	mg/kg	C U	2.200	mg/kg	C UJ	1.200	mg/kg	C UJ
Arsenic	5.100	mg/kg	C -	5.200	mg/kg	C -	6.200	mg/kg	C -
Barium	66.800	mg/kg	C -	54.500	mg/kg	C -	68.000	mg/kg	C -
Beryllium	0.720	mg/kg	C -	0.680	mg/kg	C -	0.700	mg/kg	C -
Cadmium	3.100	mg/kg	C -	1.200	mg/kg	C U	1.200	mg/kg	C U
Calcium	82300.000	mg/kg	C -	81000.000	mg/kg	C -	74000.000	mg/kg	C -
Chromium	10.400	mg/kg	C -	11.700	mg/kg	C -	12.900	mg/kg	C -
Cobalt	8.500	mg/kg	C -	6.500	mg/kg	C -	5.700	mg/kg	C -
Copper	16.400	mg/kg	C -	13.600	mg/kg	C -	13.700	mg/kg	C -
Cyanide	0.180	mg/kg	C -	0.130	mg/kg	C U	0.140	mg/kg	C -
Iron	14400.000	mg/kg	C -	17000.000	mg/kg	C -	16500.000	mg/kg	C -
Lead	18.100	mg/kg	C -	18.700	mg/kg	C -	19.200	mg/kg	C -
Magnesium	15400.000	mg/kg	C -	25900.000	mg/kg	C -	38000.000	mg/kg	C -
Manganese	418.000	mg/kg	C -	440.000	mg/kg	C -	476.000	mg/kg	C -
Mercury	0.120	mg/kg	C U	0.110	mg/kg	C U	0.110	mg/kg	C U
Molybdenum	5.000	mg/kg	C U	5.100	mg/kg	C -	4.800	mg/kg	C -
Nickel	16.400	mg/kg	C -	17.600	mg/kg	C -	15.700	mg/kg	C -
Potassium	1360.000	mg/kg	C -	2030.000	mg/kg	C -	1820.000	mg/kg	C -
Selenium	0.700	mg/kg	C U	0.500	mg/kg	C U	0.430	mg/kg	C U
Silicon	449.000	mg/kg	C -	1030.000	mg/kg	C -	581.000	mg/kg	C -
Silver	4.200	mg/kg	C -	5.000	mg/kg	C -	4.800	mg/kg	C -
Sodium	94.200	mg/kg	C -	155.000	mg/kg	C -	139.000	mg/kg	C -
Thallium	0.450	mg/kg	C U	0.510	mg/kg	C U	0.410	mg/kg	C U
Vanadium	22.100	mg/kg	C -	22.200	mg/kg	C -	23.200	mg/kg	C -
Zinc	50.600	mg/kg	C -	55.100	mg/kg	C -	46.400	mg/kg	C -
Volatile Organics									
1,1,1-Trichloroethane	13.000	ug/kg	C U	13.000	ug/kg	C U	12.000	ug/kg	C U
1,1,2,2-Tetrachloroethane	13.000	ug/kg	C U	13.000	ug/kg	C U	12.000	ug/kg	C U
1,1,2-Trichloroethane	13.000	ug/kg	C U	13.000	ug/kg	C U	12.000	ug/kg	C U
1,1-Dichloroethane	13.000	ug/kg	C U	13.000	ug/kg	C U	12.000	ug/kg	C U
1,1-Dichloroethene	13.000	ug/kg	C U	13.000	ug/kg	C U	12.000	ug/kg	C U
1,2-Dichloroethane	13.000	ug/kg	C U	13.000	ug/kg	C U	12.000	ug/kg	C U
1,2-Dichloroethene	13.000	ug/kg	C U	13.000	ug/kg	C U	12.000	ug/kg	C U
1,2-Dichloropropane	13.000	ug/kg	C U	13.000	ug/kg	C U	12.000	ug/kg	C U
2-Butanone	13.000	ug/kg	C U	13.000	ug/kg	C U	12.000	ug/kg	C U
2-Hexanone	13.000	ug/kg	C UJ	13.000	ug/kg	C UJ	12.000	ug/kg	C UJ
4-Methyl-2-pentanone	13.000	ug/kg	C UJ	13.000	ug/kg	C UJ	12.000	ug/kg	C UJ
Acetone	10.000	ug/kg	C J	2.000	ug/kg	C J	12.000	ug/kg	C U
Benzene	13.000	ug/kg	C U	13.000	ug/kg	C U	12.000	ug/kg	C U

TABLE E-3A
(Continued)

PHASE II - CHEMICAL PARAMETERS

BORING NUMBER	IFP-SS-04			IFP-SS-05			IFP-SS-06		
SAMPLE NUMBER	111793			111794			111795		
	0-0.5			0-0.5			0-0.5		
SAMPLING DATE	04/16/93			04/16/93			04/16/93		
CHEMICAL PARAMETERS	RESULTS	UNITS	L VQ	RESULTS	UNITS	L VQ	RESULTS	UNITS	L VQ
Volatile Organics									
Bromodichloromethane	13.000	ug/kg	C U	13.000	ug/kg	C U	12.000	ug/kg	C U
Bromoform	13.000	ug/kg	C U	13.000	ug/kg	C U	12.000	ug/kg	C U
Bromomethane	13.000	ug/kg	C UJ	13.000	ug/kg	C UJ	12.000	ug/kg	C UJ
Carbon Tetrachloride	13.000	ug/kg	C U	13.000	ug/kg	C U	12.000	ug/kg	C U
Carbon disulfide	13.000	ug/kg	C U	13.000	ug/kg	C U	12.000	ug/kg	C U
Chlorobenzene	13.000	ug/kg	C U	13.000	ug/kg	C U	12.000	ug/kg	C U
Chloroethane	13.000	ug/kg	C UJ	13.000	ug/kg	C UJ	12.000	ug/kg	C UJ
Chloroform	13.000	ug/kg	C U	13.000	ug/kg	C U	12.000	ug/kg	C U
Chloromethane	13.000	ug/kg	C U	13.000	ug/kg	C U	12.000	ug/kg	C U
Dibromochloromethane	13.000	ug/kg	C U	13.000	ug/kg	C U	12.000	ug/kg	C U
Ethylbenzene	13.000	ug/kg	C U	13.000	ug/kg	C U	12.000	ug/kg	C U
Methylene chloride	13.000	ug/kg	C U	13.000	ug/kg	C U	12.000	ug/kg	C U
Styrene	13.000	ug/kg	C U	13.000	ug/kg	C U	12.000	ug/kg	C U
Tetrachloroethene	13.000	ug/kg	C U	13.000	ug/kg	C U	12.000	ug/kg	C U
Toluene	13.000	ug/kg	C U	13.000	ug/kg	C U	12.000	ug/kg	C U
Trichloroethene	13.000	ug/kg	C U	13.000	ug/kg	C U	12.000	ug/kg	C U
Vinyl Acetate	13.000	ug/kg	C UJ	13.000	ug/kg	C UJ	12.000	ug/kg	C UJ
Vinyl chloride	13.000	ug/kg	C U	13.000	ug/kg	C U	12.000	ug/kg	C U
Xylenes, Total	13.000	ug/kg	C U	13.000	ug/kg	C U	12.000	ug/kg	C U
cis-1,3-Dichloropropene	13.000	ug/kg	C U	13.000	ug/kg	C U	12.000	ug/kg	C U
trans-1,3-Dichloropropene	13.000	ug/kg	C U	13.000	ug/kg	C U	12.000	ug/kg	C U
Semivolatile Organics									
1,2,4-Trichlorobenzene	430.000	ug/kg	C U	430.000	ug/kg	C U	420.000	ug/kg	C U
1,2-Dichlorobenzene	430.000	ug/kg	C U	430.000	ug/kg	C U	420.000	ug/kg	C U
1,3-Dichlorobenzene	430.000	ug/kg	C U	430.000	ug/kg	C U	420.000	ug/kg	C U
1,4-Dichlorobenzene	430.000	ug/kg	C U	430.000	ug/kg	C U	420.000	ug/kg	C U
2,4,5-Trichlorophenol	1000.000	ug/kg	C U	1000.000	ug/kg	C U	1000.000	ug/kg	C U
2,4,6-Trichlorophenol	430.000	ug/kg	C U	430.000	ug/kg	C U	420.000	ug/kg	C U
2,4-Dichlorophenol	430.000	ug/kg	C U	430.000	ug/kg	C U	420.000	ug/kg	C U
2,4-Dimethylphenol	430.000	ug/kg	C U	430.000	ug/kg	C U	420.000	ug/kg	C U
2,4-Dinitrophenol	1000.000	ug/kg	C UJ	1000.000	ug/kg	C UJ	1000.000	ug/kg	C UJ
2,4-Dinitrotoluene	430.000	ug/kg	C U	430.000	ug/kg	C U	420.000	ug/kg	C U
2,6-Dinitrotoluene	430.000	ug/kg	C U	430.000	ug/kg	C U	420.000	ug/kg	C U
2-Chloronaphthalene	430.000	ug/kg	C U	430.000	ug/kg	C U	420.000	ug/kg	C U
2-Chlorophenol	430.000	ug/kg	C U	430.000	ug/kg	C U	420.000	ug/kg	C U
2-Methylnaphthalene	430.000	ug/kg	C U	430.000	ug/kg	C U	420.000	ug/kg	C U
2-Methylphenol	430.000	ug/kg	C U	430.000	ug/kg	C U	420.000	ug/kg	C U
2-Nitroaniline	1000.000	ug/kg	C U	1000.000	ug/kg	C U	1000.000	ug/kg	C U
2-Nitrophenol	430.000	ug/kg	C U	430.000	ug/kg	C U	420.000	ug/kg	C U
3,3'-Dichlorobenzidine	430.000	ug/kg	C U	430.000	ug/kg	C U	420.000	ug/kg	C U

TABLE E-3A
(Continued)

PHASE II - CHEMICAL PARAMETERS

BORING NUMBER	IFP-SS-04			IFP-SS-05			IFP-SS-06		
SAMPLE NUMBER	111793			111794			111795		
	0-0.5			0-0.5			0-0.5		
SAMPLING DATE	04/16/93			04/16/93			04/16/93		
CHEMICAL PARAMETERS	RESULTS	UNITS	L VQ	RESULTS	UNITS	L VQ	RESULTS	UNITS	L VQ
Semivolatile Organics									
3-Nitroaniline	1000.000	ug/kg	C U	1000.000	ug/kg	C U	1000.000	ug/kg	C U
4,6-Dinitro-2-methylphenol	1000.000	ug/kg	C R	1000.000	ug/kg	C R	1000.000	ug/kg	C R
4-Bromophenyl phenyl ether	430.000	ug/kg	C UJ	430.000	ug/kg	C UJ	420.000	ug/kg	C UJ
4-Chloro-3-methylphenol	430.000	ug/kg	C U	430.000	ug/kg	C U	420.000	ug/kg	C U
4-Chlorophenylphenyl ether	430.000	ug/kg	C U	430.000	ug/kg	C U	420.000	ug/kg	C U
4-Methylphenol	430.000	ug/kg	C U	430.000	ug/kg	C U	420.000	ug/kg	C U
4-Nitroaniline	1000.000	ug/kg	C R	1000.000	ug/kg	C R	1000.000	ug/kg	C R
4-Nitrophenol	1000.000	ug/kg	C U	1000.000	ug/kg	C U	1000.000	ug/kg	C U
Acenaphthene	430.000	ug/kg	C U	430.000	ug/kg	C U	420.000	ug/kg	C U
Acenaphthylene	430.000	ug/kg	C U	430.000	ug/kg	C U	420.000	ug/kg	C U
Anthracene	430.000	ug/kg	C U	430.000	ug/kg	C U	420.000	ug/kg	C U
Benzo(a)anthracene	430.000	ug/kg	C U	430.000	ug/kg	C U	420.000	ug/kg	C U
Benzo(a)pyrene	430.000	ug/kg	C U	430.000	ug/kg	C U	420.000	ug/kg	C U
Benzo(b)fluoranthene	430.000	ug/kg	C U	430.000	ug/kg	C U	420.000	ug/kg	C U
Benzo(g,h,i)perylene	430.000	ug/kg	C UJ	430.000	ug/kg	C UJ	420.000	ug/kg	C UJ
Benzo(k)fluoranthene	430.000	ug/kg	C U	430.000	ug/kg	C U	420.000	ug/kg	C U
Benzoic acid	2100.000	ug/kg	C UJ	2100.000	ug/kg	C UJ	2000.000	ug/kg	C UJ
Benzyl alcohol	430.000	ug/kg	C U	430.000	ug/kg	C U	420.000	ug/kg	C U
Butyl benzyl phthalate	430.000	ug/kg	C U	430.000	ug/kg	C U	420.000	ug/kg	C U
Carbazole	430.000	ug/kg	C U	430.000	ug/kg	C U	420.000	ug/kg	C U
Chrysene	430.000	ug/kg	C U	100.000	ug/kg	C U	420.000	ug/kg	C U
Di-n-butyl phthalate	430.000	ug/kg	C U	430.000	ug/kg	C U	420.000	ug/kg	C U
Di-n-octyl phthalate	430.000	ug/kg	C U	430.000	ug/kg	C U	420.000	ug/kg	C U
Dibenzo(a,h)anthracene	430.000	ug/kg	C U	430.000	ug/kg	C U	420.000	ug/kg	C U
Dibenzofuran	430.000	ug/kg	C U	430.000	ug/kg	C U	420.000	ug/kg	C U
Diethyl phthalate	430.000	ug/kg	C U	430.000	ug/kg	C U	420.000	ug/kg	C U
Dimethyl phthalate	430.000	ug/kg	C U	430.000	ug/kg	C U	420.000	ug/kg	C U
Fluoranthene	430.000	ug/kg	C U	200.000	ug/kg	C U	420.000	ug/kg	C U
Fluorene	430.000	ug/kg	C U	430.000	ug/kg	C U	420.000	ug/kg	C U
Hexachlorobenzene	430.000	ug/kg	C U	430.000	ug/kg	C U	420.000	ug/kg	C U
Hexachlorobutadiene	430.000	ug/kg	C U	430.000	ug/kg	C U	420.000	ug/kg	C U
Hexachlorocyclopentadiene	430.000	ug/kg	C UJ	430.000	ug/kg	C UJ	420.000	ug/kg	C UJ
Hexachloroethane	430.000	ug/kg	C U	430.000	ug/kg	C U	420.000	ug/kg	C U
Indeno(1,2,3-cd)pyrene	430.000	ug/kg	C U	430.000	ug/kg	C U	420.000	ug/kg	C U
Isophorone	430.000	ug/kg	C U	430.000	ug/kg	C U	420.000	ug/kg	C U
N-Nitroso-di-n-propylamine	430.000	ug/kg	C UJ	430.000	ug/kg	C UJ	420.000	ug/kg	C UJ
N-Nitrosodiphenylamine	430.000	ug/kg	C U	430.000	ug/kg	C U	420.000	ug/kg	C U
Naphthalene	430.000	ug/kg	C U	430.000	ug/kg	C U	420.000	ug/kg	C U
Nitrobenzene	430.000	ug/kg	C U	430.000	ug/kg	C U	420.000	ug/kg	C U
Pentachlorophenol	1000.000	ug/kg	C UJ	1000.000	ug/kg	C UJ	1000.000	ug/kg	C UJ
Phenanthrene	430.000	ug/kg	C U	430.000	ug/kg	C U	420.000	ug/kg	C U
Phenol	430.000	ug/kg	C U	430.000	ug/kg	C U	420.000	ug/kg	C U

TABLE E-3A
(Continued)

PHASE II - CHEMICAL PARAMETERS

BORING NUMBER	IFP-SS-04			IFP-SS-05			IFP-SS-06		
SAMPLE NUMBER	111793			111794			111795		
	0-0.5			0-0.5			0-0.5		
SAMPLING DATE	04/16/93			04/16/93			04/16/93		
CHEMICAL PARAMETERS	RESULTS	UNITS	L VQ	RESULTS	UNITS	L VQ	RESULTS	UNITS	L VQ
Semivolatile Organics									
Pyrene	430.000	ug/kg	C U	430.000	ug/kg	C U	420.000	ug/kg	C U
bis(2-Chloroethoxy)methane	430.000	ug/kg	C U	430.000	ug/kg	C U	420.000	ug/kg	C U
bis(2-Chloroethyl)ether	430.000	ug/kg	C U	430.000	ug/kg	C U	420.000	ug/kg	C U
bis(2-Chloroisopropyl) ether	430.000	ug/kg	C UJ	430.000	ug/kg	C UJ	420.000	ug/kg	C UJ
bis(2-Ethylhexyl) phthalate	430.000	ug/kg	C U	430.000	ug/kg	C U	420.000	ug/kg	C U
p-Chloroaniline	430.000	ug/kg	C U	430.000	ug/kg	C U	420.000	ug/kg	C U
Pesticide Organics/PCBs									
4,4'-DDD	4.400	ug/kg	C U	4.300	ug/kg	C U	4.200	ug/kg	C U
4,4'-DDE	4.400	ug/kg	C U	4.300	ug/kg	C U	4.200	ug/kg	C U
4,4'-DDT	4.400	ug/kg	C U	4.300	ug/kg	C U	4.200	ug/kg	C U
Aldrin	2.200	ug/kg	C U	2.200	ug/kg	C U	2.200	ug/kg	C U
Aroclor-1016	44.000	ug/kg	C U	43.000	ug/kg	C U	42.000	ug/kg	C U
Aroclor-1221	89.000	ug/kg	C U	87.000	ug/kg	C U	85.000	ug/kg	C U
Aroclor-1232	44.000	ug/kg	C U	43.000	ug/kg	C U	42.000	ug/kg	C U
Aroclor-1242	44.000	ug/kg	C U	43.000	ug/kg	C U	42.000	ug/kg	C U
Aroclor-1248	44.000	ug/kg	C U	43.000	ug/kg	C U	42.000	ug/kg	C U
Aroclor-1254	44.000	ug/kg	C U	43.000	ug/kg	C U	42.000	ug/kg	C U
Aroclor-1260	44.000	ug/kg	C U	43.000	ug/kg	C U	42.000	ug/kg	C U
Dieldrin	4.400	ug/kg	C U	4.300	ug/kg	C U	4.200	ug/kg	C U
Endosulfan II	4.400	ug/kg	C U	4.300	ug/kg	C U	4.200	ug/kg	C U
Endosulfan sulfate	4.400	ug/kg	C U	4.300	ug/kg	C U	4.200	ug/kg	C U
Endosulfan-I	2.200	ug/kg	C U	2.200	ug/kg	C U	2.200	ug/kg	C U
Endrin	4.400	ug/kg	C U	4.300	ug/kg	C U	4.200	ug/kg	C U
Endrin aldehyde	4.400	ug/kg	C U	4.300	ug/kg	C U	4.200	ug/kg	C U
Endrin ketone	4.400	ug/kg	C U	4.300	ug/kg	C U	4.200	ug/kg	C U
Heptachlor	2.200	ug/kg	C U	2.200	ug/kg	C U	2.200	ug/kg	C U
Heptachlor epoxide	2.200	ug/kg	C U	2.200	ug/kg	C U	2.200	ug/kg	C U
Methoxychlor	22.000	ug/kg	C U	22.000	ug/kg	C U	22.000	ug/kg	C U
Toxaphene	220.000	ug/kg	C U	220.000	ug/kg	C U	220.000	ug/kg	C U
alpha-BHC	2.200	ug/kg	C U	2.200	ug/kg	C U	2.200	ug/kg	C U
alpha-Chlordane	2.200	ug/kg	C U	2.200	ug/kg	C U	2.200	ug/kg	C U
beta-BHC	2.200	ug/kg	C U	2.200	ug/kg	C U	2.200	ug/kg	C U
delta-BHC	2.200	ug/kg	C U	2.200	ug/kg	C U	2.200	ug/kg	C U
gamma-BHC (Lindane)	2.200	ug/kg	C U	2.200	ug/kg	C U	2.200	ug/kg	C U
gamma-Chlordane	2.200	ug/kg	C U	2.200	ug/kg	C U	2.200	ug/kg	C U

TABLE E-3A
(Continued)

PHASE II - CHEMICAL PARAMETERS

BORING NUMBER	IFP-SS-07		
SAMPLE NUMBER	111796		
	0-0.5		
SAMPLING DATE	04/16/93		
CHEMICAL PARAMETERS	RESULTS	UNITS L	VQ
Inorganics			
Aluminum	8230.000	mg/kg C	-
Antimony	1.300	mg/kg C	UJ
Arsenic	4.400	mg/kg C	-
Barium	89.500	mg/kg C	-
Beryllium	0.910	mg/kg C	-
Cadmium	1.300	mg/kg C	U
Calcium	142000.000	mg/kg C	-
Chromium	8.800	mg/kg C	-
Cobalt	3.300	mg/kg C	-
Copper	8.300	mg/kg C	-
Cyanide	0.120	mg/kg C	U
Iron	9710.000	mg/kg C	-
Lead	21.400	mg/kg C	-
Magnesium	55000.000	mg/kg C	-
Manganese	1020.000	mg/kg C	-
Mercury	0.110	mg/kg C	U
Molybdenum	5.000	mg/kg C	U
Nickel	8.500	mg/kg C	-
Potassium	1370.000	mg/kg C	-
Selenium	0.490	mg/kg C	U
Silicon	1220.000	mg/kg C	-
Silver	2.800	mg/kg C	-
Sodium	223.000	mg/kg C	-
Thallium	0.490	mg/kg C	U
Vanadium	14.900	mg/kg C	-
Zinc	28.500	mg/kg C	-
Volatile Organics			
1,1,1-Trichloroethane	13.000	ug/kg C	U
1,1,2,2-Tetrachloroethane	13.000	ug/kg C	U
1,1,2-Trichloroethane	13.000	ug/kg C	U
1,1-Dichloroethane	13.000	ug/kg C	U
1,1-Dichloroethene	13.000	ug/kg C	U
1,2-Dichloroethane	13.000	ug/kg C	U
1,2-Dichloroethene	13.000	ug/kg C	U
1,2-Dichloropropane	13.000	ug/kg C	U
2-Butanone	3.000	ug/kg C	J
2-Hexanone	13.000	ug/kg C	UJ
4-Methyl-2-pentanone	13.000	ug/kg C	UJ
Acetone	12.000	ug/kg C	J
Benzene	13.000	ug/kg C	U

TABLE E-3A
(Continued)

PHASE II - CHEMICAL PARAMETERS

BORING NUMBER	IFP-SS-07
SAMPLE NUMBER	111796
	0-0.5
SAMPLING DATE	04/16/93

CHEMICAL PARAMETERS	RESULTS	UNITS	L	VQ
Volatile Organics				
Bromodichloromethane	13.000	ug/kg	C	U
Bromoform	13.000	ug/kg	C	U
Bromomethane	13.000	ug/kg	C	UJ
Carbon Tetrachloride	13.000	ug/kg	C	U
Carbon disulfide	13.000	ug/kg	C	U
Chlorobenzene	13.000	ug/kg	C	U
Chloroethane	13.000	ug/kg	C	UJ
Chloroform	13.000	ug/kg	C	U
Chloromethane	13.000	ug/kg	C	U
Dibromochloromethane	13.000	ug/kg	C	U
Ethylbenzene	13.000	ug/kg	C	U
Methylene chloride	13.000	ug/kg	C	U
Styrene	13.000	ug/kg	C	U
Tetrachloroethene	13.000	ug/kg	C	U
Toluene	13.000	ug/kg	C	U
Trichloroethene	13.000	ug/kg	C	U
Vinyl Acetate	13.000	ug/kg	C	UJ
Vinyl chloride	13.000	ug/kg	C	U
Xylenes, Total	13.000	ug/kg	C	U
cis-1,3-Dichloropropene	13.000	ug/kg	C	U
trans-1,3-Dichloropropene	13.000	ug/kg	C	U
Semivolatile Organics				
1,2,4-Trichlorobenzene	430.000	ug/kg	C	U
1,2-Dichlorobenzene	430.000	ug/kg	C	U
1,3-Dichlorobenzene	430.000	ug/kg	C	U
1,4-Dichlorobenzene	430.000	ug/kg	C	U
2,4,5-Trichlorophenol	1000.000	ug/kg	C	U
2,4,6-Trichlorophenol	430.000	ug/kg	C	U
2,4-Dichlorophenol	430.000	ug/kg	C	U
2,4-Dimethylphenol	430.000	ug/kg	C	U
2,4-Dinitrophenol	1000.000	ug/kg	C	UJ
2,4-Dinitrotoluene	430.000	ug/kg	C	U
2,6-Dinitrotoluene	430.000	ug/kg	C	U
2-Chloronaphthalene	430.000	ug/kg	C	U
2-Chlorophenol	430.000	ug/kg	C	U
2-Methylnaphthalene	160.000	ug/kg	C	J
2-Methylphenol	430.000	ug/kg	C	U
2-Nitroaniline	1000.000	ug/kg	C	U
2-Nitrophenol	430.000	ug/kg	C	U
3,3'-Dichlorobenzidine	430.000	ug/kg	C	U

TABLE E-3A
(Continued)

PHASE II - CHEMICAL PARAMETERS

BORING NUMBER	IFP-SS-07
SAMPLE NUMBER	111796
	0-0.5
SAMPLING DATE	04/16/93

CHEMICAL PARAMETERS	RESULTS	UNITS	L	VQ
Semivolatile Organics				
3-Nitroaniline	1000.000	ug/kg	C	U
4,6-Dinitro-2-methylphenol	1000.000	ug/kg	C	R
4-Bromophenyl phenyl ether	430.000	ug/kg	C	UJ
4-Chloro-3-methylphenol	430.000	ug/kg	C	U
4-Chlorophenylphenyl ether	430.000	ug/kg	C	U
4-Methylphenol	430.000	ug/kg	C	U
4-Nitroaniline	1000.000	ug/kg	C	R
4-Nitrophenol	1000.000	ug/kg	C	U
Acenaphthene	460.000	ug/kg	C	-
Acenaphthylene	1800.000	ug/kg	C	J
Anthracene	1700.000	ug/kg	C	J
Benzo(a)anthracene	8900.000	ug/kg	C	U
Benzo(a)pyrene	16000.000	ug/kg	C	U
Benzo(b)fluoranthene	17000.000	ug/kg	C	U
Benzo(g,h,i)perylene	7200.000	ug/kg	C	UJ
Benzo(k)fluoranthene	5700.000	ug/kg	C	U
Benzoic acid	2100.000	ug/kg	C	UJ
Benzyl alcohol	430.000	ug/kg	C	U
Butyl benzyl phthalate	430.000	ug/kg	C	U
Carbazole	510.000	ug/kg	C	-
Chrysene	9000.000	ug/kg	C	U
Di-n-butyl phthalate	430.000	ug/kg	C	U
Di-n-octyl phthalate	430.000	ug/kg	C	U
Dibenzo(a,h)anthracene	2200.000	ug/kg	C	-
Dibenzofuran	250.000	ug/kg	C	J
Diethyl phthalate	430.000	ug/kg	C	U
Dimethyl phthalate	430.000	ug/kg	C	U
Fluoranthene	430.000	ug/kg	C	U
Fluorene	510.000	ug/kg	C	-
Hexachlorobenzene	430.000	ug/kg	C	U
Hexachlorobutadiene	430.000	ug/kg	C	U
Hexachlorocyclopentadiene	430.000	ug/kg	C	UJ
Hexachloroethane	430.000	ug/kg	C	U
Indeno(1,2,3-cd)pyrene	9300.000	ug/kg	C	U
Isophorone	430.000	ug/kg	C	U
N-Nitroso-di-n-propylamine	430.000	ug/kg	C	UJ
N-Nitrosodiphenylamine	430.000	ug/kg	C	U
Naphthalene	100.000	ug/kg	C	J
Nitrobenzene	430.000	ug/kg	C	U
Pentachlorophenol	1000.000	ug/kg	C	UJ
Phenanthrene	5700.000	ug/kg	C	U
Phenol	430.000	ug/kg	C	U

TABLE E-3A
(Continued)

PHASE II - CHEMICAL PARAMETERS

BORING NUMBER	IFP-SS-07		
SAMPLE NUMBER	111796		
	0-0.5		
SAMPLING DATE	04/16/93		
CHEMICAL PARAMETERS	RESULTS	UNITS L	VQ
Semivolatile Organics			
Pyrene	16000.000	ug/kg C	U
bis(2-Chloroethoxy)methane	430.000	ug/kg C	U
bis(2-Chloroethyl)ether	430.000	ug/kg C	U
bis(2-Chloroisopropyl) ether	430.000	ug/kg C	UJ
bis(2-Ethylhexyl) phthalate	430.000	ug/kg C	U
p-Chloroaniline	430.000	ug/kg C	U
Pesticide Organics/PCBs			
4,4'-DDD	4.300	ug/kg C	U
4,4'-DDE	4.300	ug/kg C	U
4,4'-DDT	4.300	ug/kg C	U
Aldrin	2.200	ug/kg C	U
Aroclor-1016	43.000	ug/kg C	U
Aroclor-1221	87.000	ug/kg C	U
Aroclor-1232	43.000	ug/kg C	U
Aroclor-1242	43.000	ug/kg C	U
Aroclor-1248	43.000	ug/kg C	U
Aroclor-1254	43.000	ug/kg C	U
Aroclor-1260	90.000	ug/kg C	U
Dieldrin	4.300	ug/kg C	U
Endosulfan II	4.300	ug/kg C	U
Endosulfan sulfate	4.300	ug/kg C	U
Endosulfan-I	2.200	ug/kg C	U
Endrin	4.300	ug/kg C	U
Endrin aldehyde	4.300	ug/kg C	U
Endrin ketone	4.300	ug/kg C	U
Heptachlor	2.200	ug/kg C	U
Heptachlor epoxide	2.200	ug/kg C	U
Methoxychlor	22.000	ug/kg C	U
Toxaphene	220.000	ug/kg C	U
alpha-BHC	2.200	ug/kg C	U
alpha-Chlordane	2.200	ug/kg C	U
beta-BHC	2.200	ug/kg C	U
delta-BHC	2.200	ug/kg C	U
gamma-BHC (Lindane)	2.200	ug/kg C	U
gamma-Chlordane	2.200	ug/kg C	U

TABLE E-3B
INACTIVE FLYASH PILE
TENTATIVELY IDENTIFIED COMPOUNDS
SURFACE SOIL

Sample Number	Sample Location	Parameter	Result	Units
111812	IFP-SD-02	oxirane, trimethyl-	480	ug/kg
111812	IFP-SD-02	cyclohexanone	370	ug/kg
111812	IFP-SD-02	ethanone, 1-oxiranyl-	550	ug/kg
111812	IFP-SD-02	1-octanol, 2,7-dimethyl	430	ug/kg
111812	IFP-SD-02	decane, 6-ethyl-2-methyl	370	ug/kg
111812	IFP-SD-02	octacosane	420	ug/kg
111812	IFP-SD-02	propanic acid, 2-methyl-, 2	330	ug/kg
111812	IFP-SD-02	octacosane	380	ug/kg
111812	IFP-SD-02	heptadecane, 2,6,10,15-tetra	450	ug/kg
111812	IFP-SD-02	octacosane	320	ug/kg
111812	IFP-SD-02	tetratetracontane	330	ug/kg
111812	IFP-SD-02	1,2-benzenedicarboxylic acid	950	ug/kg
111812	IFP-SD-02	hexatriacontane	350	ug/kg
111812	IFP-SD-02	heptacosane	320	ug/kg
111812	IFP-SD-02	2-butene, 1,4-diethoxy	470	ug/kg
111812	IFP-SD-02	tetratetracontane	450	ug/kg
111812	IFP-SD-02	9-octadecenamind, (z)-	3000	ug/kg
111812	IFP-SD-02	tetratetracontane	650	ug/kg
111812	IFP-SD-02	tetratetracontane	700	ug/kg
111812	IFP-SD-02	tritetracontane	570	ug/kg
111813	IFP-SD-03	oxirane, trimethyl-	150	ug/kg
111813	IFP-SD-03	acetic acid, 2-propenyl este	450	ug/kg
111813	IFP-SD-03	acetic acid ethenyl ester	490	ug/kg
111813	IFP-SD-03	propanoic acid, 2-methyl-,1	180	ug/kg
111813	IFP-SD-03	1,2-benzenedicarboxylic acid	570	ug/kg
111813	IFP-SD-03	9-octadecenamide, (z)-	1600	ug/kg
111813	IFP-SD-03	tetratetracontane	450	ug/kg
111813	IFP-SD-03	tetratetracontane	410	ug/kg
111813	IFP-SD-03	tritetracontane	1600	ug/kg
111813	IFP-SD-03	octadecane, 9-ethyl-9-heptyl	1000	ug/kg
111815	IFP-SD-04	butanoic acid	320	ug/kg
111815	IFP-SD-04	1,2-benzenedicarboxylic acid	1000	ug/kg
111815	IFP-SD-04	tetradecanoic acid	680	ug/kg
111815	IFP-SD-04	sulfuric acid, 5,8,11-heptad	540	ug/kg
111815	IFP-SD-04	hexadecane	440	ug/kg
111815	IFP-SD-04	tetratetracontane	420	ug/kg
111815	IFP-SD-04	9-octadecenamide, (z)	3800	ug/kg
111815	IFP-SD-04	tetratetracontane	1000	ug/kg
111815	IFP-SD-04	tetratetracontane	1000	ug/kg
111815	IFP-SD-04	tritetracontane	1000	ug/kg
111815	IFP-SD-04	tritetracontane	1300	ug/kg
111815	IFP-SD-04	eicosane, 2-methyl-	1300	ug/kg
111790	IFP-SS-01	hexane (DOT)	17	ug/kg
111796	IFP-SS-07	triphenylene, methyl	1200	ug/kg

TABLE E-4

INACTIVE FLYASH PILE
CIS SURFACE SOIL RADIOLOGICAL RESULTS
OPERABLE UNIT 2 REMEDIAL INVESTIGATION
FERNALD ENVIRONMENTAL MANAGEMENT PROJECT

FEMP ID #		SS24137			SL24188			SS24241		
Depth		0-2"			12-18"			0-6"		
Date		04/28/87			04/24/87			05/05/87		
	Isotope	Activity (pCi/g)	Uncertainty	Validation Qualifier	Activity (pCi/g)	Uncertainty	Validation Qualifier	Activity (pCi/g)	Uncertainty	Validation Qualifier
	Cesium-137	1.15	±0.77	J	0.36	±0.23	J	1.69	±0.92	
	Ruthenium-106	3.42	NA[a]	U	2.04	NA	U	17.72	±8.91	
	Neptunium-237	0.13	NA	U	0.04	NA	U	0.06	NA	U
	Plutonium-239/240	0.04	NA	U	0.02	NA	U	1.52	±0.45	
	Strontium-90	0.27	NA	U	0.29	NA	U	0.17	NA	U
	Technetium-99	1.80	NA	U	1.20	NA	U	594	±51	
	Thorium-230	17.8	±3.69	R	1.58	±0.34	J	8.66	±0.68	J
	Uranium-235	14.6	±0.70		5.79	±0.39	J	2190	±33.5	
	Uranium-234	255	±2.92		114	±1.74	J	1137	±76.3	
	Plutonium-238	0.22	NA	U	0.05	NA	U	0.13	±0.13	J
	Uranium-238	216	±2.69		92.3	±1.56	J	8600	±66.3	
	Thorium-228	13.5	±3.63	R	3.55	±0.52	J	3.52	±0.45	J
	Thorium-232	18.5	±3.81	R	2.91	±0.48	J	1.95	±0.36	J

See footnotes at end of table

TABLE E-4
(Continued)

FEMP ID #		SS24224		
Depth		0-2"		
Date		04/29/87		
	Isotope	Activity (pCi/g)	Uncertainty	Validation Qualifier
	Cesium-137	0.80	NA	<[b]
	Ruthenium-106	4.00	NA	<
	Neptunium-237	0.10	NA	<
	Plutonium-239/240	0.10	NA	<
	Strontium-90	0.70	NA	<
	Technetium-99	0.40	NA	<
	Thorium-230	59.00	±4.00	
	Uranium-235	1.90	±0.20	
	Uranium-234	82.00	±1.00	
	Plutonium-238	0.10	NA	<
	Uranium-238	40.00	±1.00	
	Thorium-228	0.90	NA	<
	Thorium-232	0.40	NA	<

[a]Not applicable

[b]Qualifiers were from the laboratory, no validation could be completed on the sample. < = less than.

TABLE E-5

INACTIVE FLYASH PILE
SURFACE MEDIA ENVIRONMENTAL SURVEY
OPERABLE UNIT 2 REMEDIAL INVESTIGATION
FERNALD ENVIRONMENTAL MANAGEMENT PROJECT

Analyte	FE0111SS	FE0113SS	FE0114SS
Asbestos	ND	ND	ND
RADIONUCLIDES (pCi/g)			
Bismuth-214	1.2±0.04	0.1±0.1	1.0±0.1
Cesium-137	0.07±0.02	0.44±0.04	B
Radium-226	1.2±0.1G	0.89±0.06G	1.0±0.1
Thorium-228	1.0±0.05G	1.2±0.1G	1.0±0.1G
Thorium-232	1.1±0.1G	1.0±0.1G	1.0±0.1G
Uranium-235	0.16±0.01	N	N
Uranium-238	N	N	N
Total Uranium (mg/kg)	4.8	9.7	4.5
TCLP METALS (mg/L)			
Arsenic	<0.5	<0.5	<0.5
Barium	0.46 B	0.55 B	0.47 B
Cadmium	<0.02	<0.02	<0.02
Chromium	<0.03	<0.03	<0.03
Lead	<0.3	<0.3	<0.3
Mercury	<0.001	<0.001	<0.001
Selenium	<0.5	<0.5	<0.5
Silver	<0.1	<0.1	<0.1
VOLATILE ORGANIC COMPOUNDS (µg/kg)			
1,1-Dichloroethane	<5	<5	<5
1,1,1-Tricloroethane	<5	<5	<5
1,1,2-Trichloroethane	<5	<5	<5
1,1,2,2-Tetrachloroethane	<5	<5	<5
1,2-Dichloroethane	<5	<5	<5
1,2-Dichloropropane	<5	<5	<5
2-Butanone	11 B	8 BJ	10 B
2-Chloroethylvinyl Ether	<10	<10	<10
2-Hexanone	<10	<10	<10
Acetone	100 Z5	24 B	21 B
Benzene	<5	<5	<5
Bromodichloromethane	<5	<5	<5
Bromoform	<5	<5	<5

See notes at end of table

TABLE E-5
(Continued)

Analyte	FE0111SS	FE0113SS	FE0114SS
VOLATILE ORGANIC COMPOUNDS (µg/kg) (continued)			
Bromomethane	<10	<10	<10
Carbon disulfide	<5	<5	<5
Carbon tetrachloride	<5	<5	<5
Chlorobenzene	<5	<5	<5
Chloroethane	<10	<10	<10
Chloroform	4 BJ	4 BJ	2 BJ
Chloromethane	<10	<10	<5
Cis-1,3-dichloropropene	<5	<5	<5
Dibromochloromethane	<5	<5	<5
Ethyl benzene	<5	<5	<5
Methylene chloride	100 Z5	42	30 B
Styrene	<5	<5	<5
Tetrachloroethene	<5	<5	<5
Toluene	20	10 B	6 B
Total xylenes	<5	<5	<5
Trans-1,2-dichloroethene	<5	<5	<5
Trans-1,3-dichloropropene	<5	<5	<5
Trichlorothene	<5	<5	<5
Vinyl acetate	<10	<10	<10
Vinyl chloride	<10	<10	<10
PCBs (mg/kg)			
Aroclor-1242	NA	NA	NA
Aroclor-1248	NA	NA	NA
Aroclor-1254	NA	NA	NA
Aroclor-1260	NA	NA	NA

NA = Not Analyzed
N = Nuclide not identified by GAMANAL analysis as being present in the sample; no value reported
I = Nuclide identified by GAMANAL analysis of sample spectrum, but values did not exceed room background at the 95% confidence level; no value reported
B = Analyte was found in the blank as well as the sample
J = Estimated value of compound present but less than the specified detection limit
G = Gamma Spectroscopy Analysis
ND = None Detected
Z5 = The samples exhibited low internal standard recovery due to the retention properties of the matrix. The reported detection limits are for soil samples and should not be used as the minimum attainable limits

TABLE E-6A

INACTIVE FLYASH PILE
RI/FS SUBSURFACE SOIL RESULTS
OPERABLE UNIT 2 REMEDIAL INVESTIGATION
FERNALD ENVIRONMENTAL MANAGEMENT PROJECT

PHASE I - RADIOLOGICAL PARAMETERS

BORING NUMBER	1016			1047			1708		
SAMPLE NUMBER	007233			007301			067095		
	1.5 - 3			9 - 10.5			6 - 7.5		
SAMPLING DATE	10/15/87			10/16/87			06/14/91		
RADIOLOGICAL PARAMETERS	RESULTS	UNITS	VQ	RESULTS	UNITS	VQ	RESULTS	UNITS	VQ
CS-137	0.200	pci/g	UJ	0.200	pci/g	UJ	0.200	pci/g	UJ
NP-237	0.600	pci/g	UJ	0.600	pci/g	U	0.600	pci/g	UJ
PU-238	0.600	pci/g	U	0.600	pci/g	U	0.600	pci/g	UJ
PU-239/240	0.600	pci/g	U	0.600	pci/g	U	0.600	pci/g	R
RA-226	0.700	pci/g	J	0.700	pci/g	J	3.070	pci/g	J
RA-228	0.800	pci/g	J	0.600	pci/g	J	3.130	pci/g	J
RU-106	1.000	pci/g	UJ	1.000	pci/g	UJ	1.000	pci/g	UJ
SR-90	0.500	pci/g	R	0.500	pci/g	UJ	1.230	pci/g	J
TC-99	0.900	pci/g	NV	1.500	pci/g	-	0.900	pci/g	U
TH-228	1.100	pci/g	-	0.800	pci/g	-	3.140	pci/g	J
TH-230	0.900	pci/g	-	1.400	pci/g	-	2.980	pci/g	J
TH-232	0.600	pci/g	-	0.600	pci/g	U	2.420	pci/g	J
TH-TOTAL	NA			NA			21.800	ug/g	J
U-234	10.700	pci/g	J	0.600	pci/g	UJ	3.650	pci/g	J
U-235/236	0.600	pci/g	UJ	0.600	pci/g	UJ	0.600	pci/g	UJ
U-238	11.400	pci/g	J	0.700	pci/g	J	3.940	pci/g	J
U-TOTAL	NA			NA			15.600	ug/g	J

TABLE E-6A
(Continued)

PHASE I - RADIOLOGICAL PARAMETERS

BORING NUMBER	1708			1708			1709		
SAMPLE NUMBER	067101			067111			067062		
	15 - 16.5			30 - 31.5			4.5 - 6		
SAMPLING DATE	06/16/91			06/16/91			06/04/91		
RADIOLOGICAL PARAMETERS	RESULTS	UNITS	VQ	RESULTS	UNITS	VQ	RESULTS	UNITS	VQ
CS-137	0.200	pci/g	UJ	0.200	pci/g	J	0.200	pci/g	U
GROSS ALPHA	NA			NA			65.000	pci/g	NV
GROSS BETA	NA			NA			49.900	pci/g	NV
NP-237	0.600	pci/g	UJ	0.600	pci/g	J	0.600	pci/g	UJ
PB-210	NA			NA			0.800	pci/g	-
PU-238	0.600	pci/g	UJ	0.600	pci/g	J	0.600	pci/g	U
PU-239/240	0.600	pci/g	R	0.600	pci/g	R	0.600	pci/g	U
RA-224	NA			NA			2.290	pci/g	-
RA-226	2.660	pci/g	J	1.720	pci/g	J	1.960	pci/g	-
RA-228	2.460	pci/g	J	1.090	pci/g	J	1.660	pci/g	-
RU-106	1.000	pci/g	UJ	1.000	pci/g	J	1.300	pci/g	D
SR-90	1.250	pci/g	J	0.700	pci/g	DJ	0.900	pci/g	D
TC-99	0.900	pci/g	U	0.900	pci/g	U	0.900	pci/g	U
TH-228	2.700	pci/g	J	1.590	pci/g	J	2.080	pci/g	J
TH-230	2.730	pci/g	J	2.930	pci/g	J	3.740	pci/g	J
TH-232	1.810	pci/g	J	1.170	pci/g	J	2.020	pci/g	J
TH-TOTAL	16.300	mg/kg	J	10.600	mg/kg	J	18.300	mg/kg	J
U-234	2.880	pci/g	J	20.640	pci/g	J	4.400	pci/g	-
U-235	NA			NA			1.100	pci/g	J
U-235/236	0.600	pci/g	UJ	0.687	pci/g	J	0.960	pci/g	J
U-238	2.970	pci/g	J	21.940	pci/g	J	5.600	pci/L	-
U-TOTAL	11.100	mg/kg	J	68.200	mg/kg	J	67.000	mg/kg	-

TABLE E-6A
(Continued)

PHASE I - RADIOLOGICAL PARAMETERS

BORING NUMBER	1709			1709			1710		
SAMPLE NUMBER	067072			067081			067028		
	15 - 16.5			28.5 - 30			3 - 4.5		
SAMPLING DATE	06/06/91			06/11/91			05/31/91		
RADIOLOGICAL PARAMETERS	RESULTS	UNITS	VQ	RESULTS	UNITS	VQ	RESULTS	UNITS	VQ
CS-137	0.200	pci/g	U	0.200	pci/g	U	0.200	pci/g	U
GROSS ALPHA	52.800	pci/g	NV	36.200	pci/g	NV	55.800	pci/g	NV
GROSS BETA	35.900	pci/g	NV	21.300	pci/g	NV	41.800	pci/g	NV
NP-237	0.780	pci/g	J	0.600	pci/g	UJ	0.600	pci/g	UJ
PB-210	1.250	pci/g	-	1.170	pci/g	-	1.180	pci/g	-
PU-238	0.600	pci/g	U	0.600	pci/g	U	0.600	pci/g	U
PU-239/240	0.600	pci/g	U	0.600	pci/g	U	0.600	pci/g	U
RA-224	2.960	pci/g	-	3.050	pci/g	-	3.050	pci/g	-
RA-226	2.790	pci/g	-	2.130	pci/g	-	2.350	pci/g	-
RA-228	2.200	pci/g	-	2.190	pci/g	-	2.460	pci/g	-
RU-106	1.300	pci/g	D	1.500	pci/g	D	1.400	pci/g	D
SR-90	0.800	pci/g	D	0.900	pci/g	D	0.900	pci/g	D
TC-99	0.900	pci/g	U	0.900	pci/g	UJ	0.900	pci/g	U
TH-228	2.780	pci/g	J	2.510	pci/g	-	2.640	pci/g	J
TH-230	4.500	pci/g	J	3.070	pci/g	-	3.310	pci/g	J
TH-232	2.650	pci/g	J	2.210	pci/g	-	2.470	pci/g	J
TH-TOTAL	23.900	mg/kg	J	20.000	mg/kg	-	22.200	mg/kg	J
U-234	4.630	pci/g	-	3.520	pci/g	-	11.400	pci/g	-
U-235	4.400	pci/g	D	0.500	pci/g	U	0.570	pci/g	J
U-235/236	0.600	pci/g	U	0.600	pci/g	U	0.880	pci/g	J
U-238	5.090	pci/g	-	3.360	pci/g	J	9.570	pci/g	J
U-TOTAL	14.500	mg/kg	J	14.400	mg/kg	J	38.200	mg/kg	J

0 88
5174

TABLE E-6A
(Continued)

PHASE I - RADIOLOGICAL PARAMETERS

BORING NUMBER	1710			1710			1711		
SAMPLE NUMBER	067043			067046			067010		
	22.5 - 23			27 - 28.5			1.5 - 3		
SAMPLING DATE	06/01/91			06/01/91			05/23/91		
RADIOLOGICAL PARAMETERS	RESULTS	UNITS	VQ	RESULTS	UNITS	VQ	RESULTS	UNITS	VQ
CS-137	0.200	pci/g	UJ	0.200	pci/g	U	0.200	pci/g	U
GROSS ALPHA	140.000	pci/g	NV	766.000	pci/g	NV	102.000	pci/g	NV
GROSS BETA	75.000	pci/g	NV	442.000	pci/g	NV	72.300	pci/g	NV
NP-237	NA			0.600	pci/g	J	0.600	pci/g	UJ
PB-210	2.750	pci/g	J	16.800	pci/g	-	1.240	pci/g	-
PU-238	0.600	pci/g	UJ	1.000	pci/g	U	0.600	pci/g	R
PU-239/240	0.600	pci/g	U	1.000	pci/g	U	0.600	pci/g	R
RA-224	3.110	pci/g	J	3.490	pci/g	-	2.940	pci/g	-
RA-226	6.360	pci/g	J	36.000	pci/g	-	2.740	pci/g	-
RA-228	2.880	pci/g	J	3.120	pci/g	-	2.160	pci/g	-
RU-106	1.200	pci/g	DJ	1.800	pci/g	D	1.500	pci/g	D
SR-90	0.500	pci/g	U	1.740	pci/g	-	1.100	pci/g	D
TC-99	0.900	pci/g	U	0.900	pci/g	J	0.900	pci/g	U
TH-228	4.100	pci/g	J	3.030	pci/g	J	0.790	pci/g	J
TH-230	12.800	pci/g	J	54.600	pci/g	-	1.410	pci/g	J
TH-232	4.000	pci/g	-	3.280	pci/g	-	0.800	pci/g	J
TH-TOTAL	36.100	mg/kg	-	29.600	mg/kg	-	7.220	mg/kg	J
U-234	51.400	pci/g	J	187.000	pci/g	-	42.000	pci/g	-
U-235	2.040	pci/g	J	12.700	pci/g	-	2.420	pci/g	-
U-235/236	3.290	pci/g	J	18.500	pci/g	-	5.340	pci/g	-
U-238 (Alpha)	54.2	pci/g	-	191.000	pci/g	-	40.100	pci/g	-
U-TOTAL	128.000	mg/kg	J	660.000	mg/kg	-	123.000	mg/kg	-

TABLE E-6A
(Continued)

PHASE I - RADIOLOGICAL PARAMETERS

BORING NUMBER	1711			1711			1791		
SAMPLE NUMBER	067014			067019			067121		
	7.5 - 9			13.5 - 15			27 - 28.5		
SAMPLING DATE	05/29/91			05/29/91			06/25/91		
RADIOLOGICAL PARAMETERS	RESULTS	UNITS	VQ	RESULTS	UNITS	VQ	RESULTS	UNITS	VQ
CS-137	0.200	pci/g	U	0.200	pci/g	U	0.200	pci/g	UJ
GROSS ALPHA	59.000	pci/g	NV	24.800	pci/g	NV	NA		
GROSS BETA	36.500	pci/g	NV	28.600	pci/g	NV	NA		
NP-237	0.600	pci/g	UJ	0.600	pci/g	UJ	0.600	pci/g	UJ
PB-210	1.870	pci/g	-	0.710	pci/g	-	NA		
PU-238	0.600	pci/g	U	0.600	pci/g	U	0.600	pci/g	UJ
PU-239/240	0.600	pci/g	U	0.600	pci/g	U	0.600	pci/g	U
RA-224	3.220	pci/g	-	1.710	pci/g	-	NA		
RA-226	4.110	pci/g	-	1.480	pci/g	-	1.390	pci/g	J
RA-228	2.670	pci/g	-	1.270	pci/g	-	1.030	pci/g	J
RU-106	1.400	pci/g	D	1.200	pci/g	D	1.100	pci/g	DJ
SR-90	0.900	pci/g	D	0.900	pci/g	D	1.000	pci/g	D
TC-99	0.900	pci/g	U	0.900	pci/g	U	0.900	pci/g	U
TH-228	3.340	pci/g	-	1.560	pci/g	J	1.110	pci/g	J
TH-230	6.090	pci/g	-	2.140	pci/g	J	1.730	pci/g	J
TH-232	3.100	pci/g	-	1.100	pci/g	J	0.950	pci/g	J
TH-TOTAL	28.000	mg/kg	-	9.890	mg/kg	J	8.580	mg/kg	J
U-234	5.930	pci/g	-	4.950	pci/g	-	NA		
U-235	0.500	pci/g	U	0.400	pci/g	U	NA		
U-235/236	0.870	pci/g	-	0.600	pci/g	U	NA		
U-238	6.070	pci/g	J	3.520	pci/g	J	NA		
U-TOTAL	18.200	mg/kg	J	18.000	mg/kg	J	873.000	mg/kg	J

0 90

5174

TABLE E-6A
(Continued)

PHASE I - RADIOLOGICAL PARAMETERS

BORING NUMBER	1849			2047			2401		
SAMPLE NUMBER	067618			008960			038486		
	28.5 - 30			25 - 26.5			0 - 65		
SAMPLING DATE	02/22/92			12/20/88			03/06/92		
RADIOLOGICAL PARAMETERS	RESULTS	UNITS	VQ	RESULTS	UNITS	VQ	RESULTS	UNITS	VQ
CS-137	0.200	pci/g	UJ	0.200	pci/g	UJ	NA		
GROSS ALPHA	11.400	pci/g	NV	NA			NA		
GROSS BETA	19.700	pci/g	NV	NA			NA		
NP-237	NA			0.600	pci/g	U	NA		
PB-210	0.790	pci/g	J	NA			NA		
PU-238	0.600	pci/g	U	0.600	pci/g	UJ	NA		
PU-239/240	0.600	pci/g	U	0.600	pci/g	UJ	NA		
RA-224	1.020	pci/g	J	NA			NA		
RA-226	0.950	pci/g	J	0.400	pci/g	J	NA		
RA-228	0.740	pci/g	J	0.500	pci/g	UJ	NA		
RU-106	1.000	pci/g	UJ	1.000	pci/g	UJ	NA		
SR-90	0.770	pci/g	-	0.700	pci/g	-	NA		
TC-99	0.900	pci/g	UJ	0.900	pci/g	U	NA		
TH-228	1.440	pci/g	-	0.600	pci/g	R	NA		
TH-230	1.690	pci/g	-	1.000	pci/g	R	NA		
TH-232	0.910	pci/g	-	0.600	pci/g	R	NA		
TH-TOTAL	8.210	mg/kg	-	NA			6.080	mg/kg	-
U-234	1.730	pci/g	-	0.600	pci/g	R	NA		
U-235	3.300	pci/g	UJ	NA			NA		
U-235/236	0.600	pci/g	U	0.600	pci/g	R	NA		
U-238	1.760	pci/g	-	0.600	pci/g	R	NA		
U-TOTAL	6.930	mg/kg	J	2.000	mg/kg	UJ	4.640	mg/kg	-

TABLE E-6A
(Continued)

PHASE I - RADIOLOGICAL PARAMETERS

BORING NUMBER	4016			4016			4016		
SAMPLE NUMBER	010441			010450			010454		
	50 - 51.5			95 - 96.5			115 - 116.5		
SAMPLING DATE	12/18/88			12/20/88			12/21/88		
RADIOLOGICAL PARAMETERS	RESULTS	UNITS	VQ	RESULTS	UNITS	VQ	RESULTS	UNITS	VQ
CS-137	0.200	pci/g	UJ	0.200	pci/g	R	0.200	pci/g	UJ
NP-237	0.600	pci/g	U	0.600	pci/g	U	0.600	pci/g	U
PU-238	0.600	pci/g	UJ	0.600	pci/g	UJ	0.600	pci/g	UJ
PU-239/240	0.600	pci/g	UJ	0.600	pci/g	UJ	0.600	pci/g	UJ
RA-226	0.500	pci/g	J	0.900	pci/g	R	0.300	pci/g	UJ
RA-228	0.500	pci/g	UJ	1.200	pci/g	R	0.500	pci/g	UJ
RU-106	1.000	pci/g	UJ	1.000	pci/g	R	1.000	pci/g	UJ
SR-90	0.500	pci/g	U	4.000	pci/g	-	0.900	pci/g	-
TC-99	0.900	pci/g	U	0.900	pci/g	U	0.900	pci/g	U
TH-228	0.600	pci/g	U	1.100	pci/g	R	0.600	pci/g	U
TH-230	0.600	pci/g	U	1.200	pci/g	R	0.600	pci/g	U
TH-232	0.600	pci/g	U	0.900	pci/g	R	0.600	pci/g	U
U-234	0.600	pci/g	U	0.700	pci/g	-	0.600	pci/g	U
U-235/236	0.600	pci/g	U	0.600	pci/g	U	0.600	pci/g	U
U-238	0.600	pci/g	U	0.800	pci/g	-	0.600	pci/g	U
U-TOTAL	2.000	mg/kg	UJ	3.000	mg/kg	R	2.000	mg/kg	UJ

0 92

- 5174

TABLE E-6A
(Continued)

PHASE I - CHEMICAL PARAMETERS

BORING NUMBER	1708			1708			1708		
SAMPLE NUMBER	067096			067102			067112		
	7.5-9			16.5-18			31.5-33		
SAMPLING DATE	06/14/91			06/16/91			06/16/91		
CHEMICAL PARAMETERS	RESULTS	UNITS	L VQ	RESULTS	UNITS	L VQ	RESULTS	UNITS	L VQ
Inorganics									
Aluminum	6350.000	mg/kg	D -	7250.000	mg/kg	D -	9550.000	mg/kg	D -
Antimony	7.700	mg/kg	D UJ	8.400	mg/kg	D UJ	7.400	mg/kg	D UJ
Arsenic	7.100	mg/kg	D J	7.400	mg/kg	D J	1.700	mg/kg	D J
Barium	315.000	mg/kg	D -	294.000	mg/kg	D -	112.000	mg/kg	D -
Beryllium	1.800	mg/kg	D -	2.000	mg/kg	D -	0.600	mg/kg	D -
Cadmium	0.860	mg/kg	D -	1.300	mg/kg	D -	0.500	mg/kg	D U
Calcium	22700.000	mg/kg	D J	36800.000	mg/kg	D J	2930.000	mg/kg	D J
Chromium	15.900	mg/kg	D -	19.600	mg/kg	D -	13.600	mg/kg	D -
Cobalt	7.000	mg/kg	D -	8.000	mg/kg	D -	9.900	mg/kg	D -
Copper	27.900	mg/kg	D -	29.500	mg/kg	D -	14.600	mg/kg	D -
Cyanide	0.590	mg/kg	D J	1.200	mg/kg	D J	0.120	mg/kg	D R
Iron	5510.000	mg/kg	D -	7490.000	mg/kg	D -	16300.000	mg/kg	D -
Lead	11.000	mg/kg	D J	67.100	mg/kg	D J	11.300	mg/kg	D J
Magnesium	5370.000	mg/kg	D -	10100.000	mg/kg	D -	2060.000	mg/kg	D -
Manganese	282.000	mg/kg	D J	330.000	mg/kg	D J	736.000	mg/kg	D J
Mercury	0.130	mg/kg	D R	0.130	mg/kg	D R	0.120	mg/kg	D R
Molybdenum	8.900	mg/kg	D -	9.400	mg/kg	D -	9.200	mg/kg	D -
Nickel	16.000	mg/kg	D -	18.000	mg/kg	D -	16.000	mg/kg	D -
Potassium	961.000	mg/kg	D -	1070.000	mg/kg	D -	1430.000	mg/kg	D -
Selenium	2.800	mg/kg	D -	2.900	mg/kg	D -	0.500	mg/kg	D UJ
Silver	5.900	mg/kg	D -	8.300	mg/kg	D -	2.500	mg/kg	D UJ
Sodium	225.000	mg/kg	D -	237.000	mg/kg	D U	71.900	mg/kg	D U
Thallium	0.510	mg/kg	D U	0.560	mg/kg	D U	0.500	mg/kg	D U
Vanadium	28.700	mg/kg	D -	27.700	mg/kg	D -	17.800	mg/kg	D -
Zinc	15.100	mg/kg	D -	21.500	mg/kg	D -	47.000	mg/kg	D -
Volatile Organics									
1,1,1-Trichloroethane	6.000	ug/kg	D UJ	4.000	ug/kg	D J	6.000	ug/kg	D U
1,1,2,2-Tetrachloroethane	6.000	ug/kg	D R	6.000	ug/kg	D R	6.000	ug/kg	D U
1,1,2-Trichloroethane	6.000	ug/kg	D UJ	6.000	ug/kg	D UJ	6.000	ug/kg	D U
1,1-Dichloroethane	6.000	ug/kg	D UJ	6.000	ug/kg	D UJ	6.000	ug/kg	D U
1,1-Dichloroethene	6.000	ug/kg	D UJ	6.000	ug/kg	D UJ	6.000	ug/kg	D U
1,2-Dichloroethane	6.000	ug/kg	D UJ	6.000	ug/kg	D UJ	6.000	ug/kg	D U
1,2-Dichloroethene	6.000	ug/kg	D UJ	6.000	ug/kg	D UJ	6.000	ug/kg	D U
1,2-Dichloropropane	6.000	ug/kg	D UJ	6.000	ug/kg	D UJ	6.000	ug/kg	D U
2-Butanone	13.000	ug/kg	D UJ	13.000	ug/kg	D UJ	29.000	ug/kg	D U
2-Hexanone	13.000	ug/kg	D R	13.000	ug/kg	D R	12.000	ug/kg	D U
4-Methyl-2-pentanone	13.000	ug/kg	D R	13.000	ug/kg	D R	12.000	ug/kg	D U
Acetone	13.000	ug/kg	D UJ	13.000	ug/kg	D UJ	190.000	ug/kg	D J
Benzene	6.000	ug/kg	D UJ	6.000	ug/kg	D UJ	6.000	ug/kg	D U
Bromodichloromethane	6.000	ug/kg	D UJ	6.000	ug/kg	D UJ	6.000	ug/kg	D U

TABLE E-6A
(Continued)

PHASE I - CHEMICAL PARAMETERS

BORING NUMBER	1708					1708					1708				
SAMPLE NUMBER	067096					067102					067112				
	7.5-9					16.5-18					31.5-33				
SAMPLING DATE	06/14/91					06/16/91					06/16/91				
CHEMICAL PARAMETERS	RESULTS	UNITS	L	VQ		RESULTS	UNITS	L	VQ		RESULTS	UNITS	L	VQ	
Volatile Organics															
Bromoform	6.000	ug/kg	D	UJ		6.000	ug/kg	D	UJ		6.000	ug/kg	D	U	
Bromomethane	13.000	ug/kg	D	UJ		13.000	ug/kg	D	UJ		12.000	ug/kg	D	U	
Carbon Tetrachloride	6.000	ug/kg	D	UJ		6.000	ug/kg	D	UJ		6.000	ug/kg	D	U	
Carbon disulfide	6.000	ug/kg	D	UJ		6.000	ug/kg	D	UJ		6.000	ug/kg	D	U	
Chlorobenzene	6.000	ug/kg	D	R		6.000	ug/kg	D	R		6.000	ug/kg	D	U	
Chloroethane	13.000	ug/kg	D	UJ		13.000	ug/kg	D	UJ		12.000	ug/kg	D	U	
Chloroform	6.000	ug/kg	D	UJ		6.000	ug/kg	D	UJ		6.000	ug/kg	D	U	
Chloromethane	13.000	ug/kg	D	UJ		13.000	ug/kg	D	UJ		12.000	ug/kg	D	U	
Dibromochloromethane	6.000	ug/kg	D	UJ		6.000	ug/kg	D	UJ		6.000	ug/kg	D	U	
Ethylbenzene	6.000	ug/kg	D	R		6.000	ug/kg	D	R		6.000	ug/kg	D	U	
Methylene chloride	15.000	ug/kg	D	UJ		6.000	ug/kg	D	UJ		6.000	ug/kg	D	U	
Styrene	6.000	ug/kg	D	R		6.000	ug/kg	D	R		6.000	ug/kg	D	U	
Tetrachloroethene	6.000	ug/kg	D	UJ		6.000	ug/kg	D	R		6.000	ug/kg	D	U	
Toluene	3.000	ug/kg	D	J		6.000	ug/kg	D	R		6.000	ug/kg	D	U	
Trichloroethene	6.000	ug/kg	D	UJ		6.000	ug/kg	D	UJ		6.000	ug/kg	D	U	
Vinyl Acetate	13.000	ug/kg	D	UJ		13.000	ug/kg	D	UJ		12.000	ug/kg	D	U	
Vinyl chloride	13.000	ug/kg	D	UJ		13.000	ug/kg	D	UJ		12.000	ug/kg	D	U	
Xylenes, Total	6.000	ug/kg	D	R		6.000	ug/kg	D	R		6.000	ug/kg	D	U	
cis-1,3-Dichloropropene	6.000	ug/kg	D	UJ		6.000	ug/kg	D	UJ		6.000	ug/kg	D	U	
trans-1,3-Dichloropropene	6.000	ug/kg	D	UJ		6.000	ug/kg	D	UJ		6.000	ug/kg	D	U	
Semivolatile Organics															
1,2,4-Trichlorobenzene	860.000	ug/kg	D	UJ		930.000	ug/kg	D	U		820.000	ug/kg	D	U	
1,2-Dichlorobenzene	860.000	ug/kg	D	UJ		930.000	ug/kg	D	U		820.000	ug/kg	D	U	
1,3-Dichlorobenzene	860.000	ug/kg	D	UJ		930.000	ug/kg	D	U		820.000	ug/kg	D	U	
1,4-Dichlorobenzene	860.000	ug/kg	D	UJ		930.000	ug/kg	D	U		820.000	ug/kg	D	U	
2,4,5-Trichlorophenol	4200.000	ug/kg	D	UJ		4500.000	ug/kg	D	U		4000.000	ug/kg	D	U	
2,4,6-Trichlorophenol	860.000	ug/kg	D	UJ		930.000	ug/kg	D	U		820.000	ug/kg	D	U	
2,4-Dichlorophenol	860.000	ug/kg	D	UJ		930.000	ug/kg	D	U		820.000	ug/kg	D	U	
2,4-Dimethylphenol	860.000	ug/kg	D	UJ		930.000	ug/kg	D	U		820.000	ug/kg	D	U	
2,4-Dinitrophenol	4200.000	ug/kg	D	UJ		4500.000	ug/kg	D	U		4000.000	ug/kg	D	UJ	
2,4-Dinitrotoluene	860.000	ug/kg	D	UJ		930.000	ug/kg	D	U		820.000	ug/kg	D	U	
2,6-Dinitrotoluene	860.000	ug/kg	D	UJ		930.000	ug/kg	D	U		820.000	ug/kg	D	U	
2-Chloronaphthalene	860.000	ug/kg	D	UJ		930.000	ug/kg	D	U		820.000	ug/kg	D	U	
2-Chlorophenol	860.000	ug/kg	D	UJ		930.000	ug/kg	D	U		820.000	ug/kg	D	U	
2-Methylnaphthalene	860.000	ug/kg	D	UJ		930.000	ug/kg	D	U		820.000	ug/kg	D	U	
2-Methylphenol	860.000	ug/kg	D	UJ		930.000	ug/kg	D	U		820.000	ug/kg	D	U	
2-Nitroaniline	4200.000	ug/kg	D	UJ		4500.000	ug/kg	D	U		4000.000	ug/kg	D	U	
2-Nitrophenol	860.000	ug/kg	D	UJ		930.000	ug/kg	D	U		820.000	ug/kg	D	U	
3,3'-Dichlorobenzidine	1700.000	ug/kg	D	UJ		1900.000	ug/kg	D	U		1600.000	ug/kg	D	UJ	
3-Nitroaniline	4200.000	ug/kg	D	UJ		4500.000	ug/kg	D	UJ		4000.000	ug/kg	D	UJ	

5174

TABLE E-6A
(Continued)

PHASE I - CHEMICAL PARAMETERS

BORING NUMBER	1708			1708			1708		
SAMPLE NUMBER	067096			067102			067112		
	7.5-9			16.5-18			31.5-33		
SAMPLING DATE	06/14/91			06/16/91			06/16/91		
CHEMICAL PARAMETERS	RESULTS	UNITS	L VQ	RESULTS	UNITS	L VQ	RESULTS	UNITS	L VQ
Semivolatile Organics									
4,6-Dinitro-2-methylphenol	4200.000	ug/kg	D UJ	4500.000	ug/kg	D U	4000.000	ug/kg	D U
4-Bromophenyl phenyl ether	860.000	ug/kg	D UJ	930.000	ug/kg	D U	820.000	ug/kg	D U
4-Chloro-3-methylphenol	860.000	ug/kg	D UJ	930.000	ug/kg	D U	820.000	ug/kg	D U
4-Chlorophenylphenyl ether	860.000	ug/kg	D UJ	930.000	ug/kg	D U	820.000	ug/kg	D U
4-Methylphenol	860.000	ug/kg	D UJ	930.000	ug/kg	D U	820.000	ug/kg	D U
4-Nitroaniline	4200.000	ug/kg	D UJ	4500.000	ug/kg	D U	4000.000	ug/kg	D UJ
4-Nitrophenol	4200.000	ug/kg	D UJ	4500.000	ug/kg	D U	4000.000	ug/kg	D U
Acenaphthene	860.000	ug/kg	D UJ	930.000	ug/kg	D U	820.000	ug/kg	D U
Acenaphthylene	860.000	ug/kg	D UJ	930.000	ug/kg	D U	820.000	ug/kg	D U
Anthracene	860.000	ug/kg	D UJ	930.000	ug/kg	D U	820.000	ug/kg	D U
Benzo(a)anthracene	110.000	ug/kg	D J	930.000	ug/kg	D U	820.000	ug/kg	D U
Benzo(a)pyrene	130.000	ug/kg	D J	930.000	ug/kg	D U	820.000	ug/kg	D U
Benzo(b)fluoranthene	360.000	ug/kg	D J	930.000	ug/kg	D U	820.000	ug/kg	D U
Benzo(g,h,i)perylene	860.000	ug/kg	D UJ	930.000	ug/kg	D U	820.000	ug/kg	D U
Benzo(k)fluoranthene	260.000	ug/kg	D J	930.000	ug/kg	D U	820.000	ug/kg	D U
Benzoic acid	4200.000	ug/kg	D UJ	97.000	ug/kg	D J	4000.000	ug/kg	D U
Benzyl alcohol	860.000	ug/kg	D UJ	930.000	ug/kg	D U	820.000	ug/kg	D U
Butyl benzyl phthalate	860.000	ug/kg	D UJ	930.000	ug/kg	D UJ	820.000	ug/kg	D U
Chrysene	150.000	ug/kg	D J	930.000	ug/kg	D U	820.000	ug/kg	D U
Di-n-butyl phthalate	860.000	ug/kg	D UJ	930.000	ug/kg	D U	820.000	ug/kg	D U
Di-n-octyl phthalate	860.000	ug/kg	D UJ	930.000	ug/kg	D U	820.000	ug/kg	D U
Dibenzo(a,h)anthracene	860.000	ug/kg	D UJ	930.000	ug/kg	D U	820.000	ug/kg	D U
Dibenzofuran	860.000	ug/kg	D UJ	930.000	ug/kg	D U	820.000	ug/kg	D U
Diethyl phthalate	860.000	ug/kg	D UJ	930.000	ug/kg	D U	820.000	ug/kg	D U
Dimethyl phthalate	860.000	ug/kg	D UJ	930.000	ug/kg	D U	820.000	ug/kg	D U
Fluoranthene	94.000	ug/kg	D J	930.000	ug/kg	D U	820.000	ug/kg	D U
Fluorene	860.000	ug/kg	D UJ	930.000	ug/kg	D U	820.000	ug/kg	D U
Hexachlorobenzene	860.000	ug/kg	D UJ	930.000	ug/kg	D U	820.000	ug/kg	D U
Hexachlorobutadiene	860.000	ug/kg	D UJ	930.000	ug/kg	D U	820.000	ug/kg	D U
Hexachlorocyclopentadiene	860.000	ug/kg	D UJ	930.000	ug/kg	D U	820.000	ug/kg	D U
Hexachloroethane	860.000	ug/kg	D UJ	930.000	ug/kg	D U	820.000	ug/kg	D U
Indeno(1,2,3-cd)pyrene	860.000	ug/kg	D UJ	930.000	ug/kg	D U	820.000	ug/kg	D U
Isophorone	860.000	ug/kg	D UJ	930.000	ug/kg	D U	820.000	ug/kg	D U
N-Nitroso-di-n-propylamine	860.000	ug/kg	D UJ	930.000	ug/kg	D U	820.000	ug/kg	D U
N-Nitrosodiphenylamine	860.000	ug/kg	D UJ	930.000	ug/kg	D U	820.000	ug/kg	D U
Naphthalene	860.000	ug/kg	D UJ	930.000	ug/kg	D U	820.000	ug/kg	D U
Nitrobenzene	860.000	ug/kg	D UJ	930.000	ug/kg	D U	820.000	ug/kg	D U
Pentachlorophenol	4200.000	ug/kg	D UJ	4500.000	ug/kg	D U	4000.000	ug/kg	D U
Phenanthrene	860.000	ug/kg	D UJ	930.000	ug/kg	D U	820.000	ug/kg	D U
Phenol	860.000	ug/kg	D UJ	930.000	ug/kg	D U	820.000	ug/kg	D U
Pyrene	120.000	ug/kg	D J	930.000	ug/kg	D U	820.000	ug/kg	D U
bis(2-Chloroethoxy)methane	860.000	ug/kg	D UJ	930.000	ug/kg	D U	820.000	ug/kg	D U

TABLE E-6A
(Continued)

PHASE I - CHEMICAL PARAMETERS

BORING NUMBER	1708				1708				1708			
SAMPLE NUMBER	067096				067102				067112			
	7.5-9				16.5-18				31.5-33			
SAMPLING DATE	06/14/91				06/16/91				06/16/91			
CHEMICAL PARAMETERS	RESULTS	UNITS	L	VQ	RESULTS	UNITS	L	VQ	RESULTS	UNITS	L	VQ
Semivolatile Organics												
bis(2-Chloroethyl)ether	860.000	ug/kg	D	UJ	930.000	ug/kg	D	U	820.000	ug/kg	D	U
bis(2-Chloroisopropyl) ether	860.000	ug/kg	D	UJ	930.000	ug/kg	D	U	820.000	ug/kg	D	U
bis(2-Ethylhexyl) phthalate	860.000	ug/kg	D	UJ	930.000	ug/kg	D	UJ	820.000	ug/kg	D	U
p-Chloroaniline	860.000	ug/kg	D	UJ	930.000	ug/kg	D	U	820.000	ug/kg	D	U
Pesticide Organics/PCBs												
4,4'-DDD	21.000	ug/kg	D	U	23.000	ug/kg	D	U	20.000	ug/kg	D	U
4,4'-DDE	21.000	ug/kg	D	U	23.000	ug/kg	D	U	20.000	ug/kg	D	U
4,4'-DDT	21.000	ug/kg	D	U	23.000	ug/kg	D	U	20.000	ug/kg	D	U
Aldrin	10.000	ug/kg	D	U	11.000	ug/kg	D	U	10.000	ug/kg	D	U
Aroclor-1016	100.000	ug/kg	D	U	110.000	ug/kg	D	U	100.000	ug/kg	D	U
Aroclor-1221	100.000	ug/kg	D	U	110.000	ug/kg	D	U	100.000	ug/kg	D	U
Aroclor-1232	100.000	ug/kg	D	U	110.000	ug/kg	D	U	100.000	ug/kg	D	U
Aroclor-1242	100.000	ug/kg	D	U	110.000	ug/kg	D	U	100.000	ug/kg	D	U
Aroclor-1248	100.000	ug/kg	D	U	110.000	ug/kg	D	U	100.000	ug/kg	D	U
Aroclor-1254	210.000	ug/kg	D	U	230.000	ug/kg	D	U	200.000	ug/kg	D	U
Aroclor-1260	210.000	ug/kg	D	U	230.000	ug/kg	D	U	200.000	ug/kg	D	U
Dieldrin	21.000	ug/kg	D	U	23.000	ug/kg	D	U	20.000	ug/kg	D	U
Endosulfan II	21.000	ug/kg	D	U	23.000	ug/kg	D	U	20.000	ug/kg	D	U
Endosulfan sulfate	21.000	ug/kg	D	U	23.000	ug/kg	D	U	20.000	ug/kg	D	U
Endosulfan-I	10.000	ug/kg	D	U	11.000	ug/kg	D	U	10.000	ug/kg	D	U
Endrin	21.000	ug/kg	D	U	23.000	ug/kg	D	U	20.000	ug/kg	D	U
Endrin ketone	21.000	ug/kg	D	U	23.000	ug/kg	D	U	20.000	ug/kg	D	U
Heptachlor	10.000	ug/kg	D	U	11.000	ug/kg	D	U	10.000	ug/kg	D	U
Heptachlor epoxide	10.000	ug/kg	D	U	11.000	ug/kg	D	U	10.000	ug/kg	D	U
Methoxychlor	100.000	ug/kg	D	U	110.000	ug/kg	D	U	100.000	ug/kg	D	U
Toxaphene	210.000	ug/kg	D	U	230.000	ug/kg	D	U	200.000	ug/kg	D	U
alpha-BHC	10.000	ug/kg	D	U	11.000	ug/kg	D	U	10.000	ug/kg	D	U
alpha-Chlordane	100.000	ug/kg	D	U	110.000	ug/kg	D	U	100.000	ug/kg	D	U
beta-BHC	10.000	ug/kg	D	U	11.000	ug/kg	D	U	10.000	ug/kg	D	U
delta-BHC	10.000	ug/kg	D	U	11.000	ug/kg	D	U	10.000	ug/kg	D	U
gamma-BHC (Lindane)	10.000	ug/kg	D	U	11.000	ug/kg	D	U	10.000	ug/kg	D	U
gamma-Chlordane	100.000	ug/kg	D	U	110.000	ug/kg	D	U	100.000	ug/kg	D	U

TABLE E-6A
(Continued)

PHASE I - CHEMICAL PARAMETERS

BORING NUMBER	1709			1709			1710		
SAMPLE NUMBER	067064			067071			067029		
	7.5-9			13.5-15			4.5-5		
SAMPLING DATE	06/06/91			06/06/91			05/31/91		
CHEMICAL PARAMETERS	RESULTS	UNITS	L VQ	RESULTS	UNITS	L VQ	RESULTS	UNITS	L VQ
Inorganics									
Aluminum	4240.000	mg/kg	D -	4400.000	mg/kg	D -	6470.000	mg/kg	D -
Antimony	7.800	mg/kg	D R	7.400	mg/kg	D R	8.400	mg/kg	D R
Arsenic	16.300	mg/kg	D -	74.800	mg/kg	D -	31.700	mg/kg	D -
Barium	286.000	mg/kg	D -	252.000	mg/kg	D -	637.000	mg/kg	D -
Beryllium	3.900	mg/kg	D -	4.300	mg/kg	D -	6.700	mg/kg	D -
Cadmium	0.520	mg/kg	D U	0.490	mg/kg	D U	0.780	mg/kg	D -
Calcium	2790.000	mg/kg	D -	2800.000	mg/kg	D -	5880.000	mg/kg	D -
Chromium	5.600	mg/kg	D J	5.100	mg/kg	D J	7.300	mg/kg	D -
Cobalt	5.500	mg/kg	D -	6.300	mg/kg	D -	11.200	mg/kg	D -
Copper	28.500	mg/kg	D -	28.800	mg/kg	D -	34.400	mg/kg	D -
Cyanide	0.270	mg/kg	D -	0.230	mg/kg	D -	0.690	mg/kg	D -
Iron	4610.000	mg/kg	D -	5230.000	mg/kg	D -	12100.000	mg/kg	D -
Lead	6.700	mg/kg	D J	9.000	mg/kg	D J	13.100	mg/kg	D J
Magnesium	383.000	mg/kg	D -	439.000	mg/kg	D -	978.000	mg/kg	D J
Manganese	24.000	mg/kg	D J	22.700	mg/kg	D J	106.000	mg/kg	D -
Mercury	0.130	mg/kg	D UJ	0.120	mg/kg	D UJ	0.140	mg/kg	D UJ
Molybdenum	3.500	mg/kg	D -	4.900	mg/kg	D -	4.300	mg/kg	D -
Nickel	10.800	mg/kg	D -	12.000	mg/kg	D -	19.600	mg/kg	D -
Potassium	523.000	mg/kg	D -	616.000	mg/kg	D -	1030.000	mg/kg	D -
Selenium	0.740	mg/kg	D -	4.100	mg/kg	D -	1.400	mg/kg	D -
Silver	2.600	mg/kg	D UJ	2.500	mg/kg	D UJ	2.800	mg/kg	D J
Sodium	158.000	mg/kg	D -	179.000	mg/kg	D -	294.000	mg/kg	D -
Thallium	0.520	mg/kg	D UJ	0.800	mg/kg	D J	0.560	mg/kg	D UJ
Vanadium	34.900	mg/kg	D -	30.000	mg/kg	D -	28.300	mg/kg	D -
Zinc	9.400	mg/kg	D -	52.400	mg/kg	D -	14.500	mg/kg	D -
Volatile Organics									
1,1,1-Trichloroethane	150.000	ug/kg	D J	50.000	ug/kg	D J	7.000	ug/kg	D R
1,1,2,2-Tetrachloroethane	6.000	ug/kg	D R	6.000	ug/kg	D R	7.000	ug/kg	D R
1,1,2-Trichloroethane	6.000	ug/kg	D R	6.000	ug/kg	D R	7.000	ug/kg	D R
1,1-Dichloroethane	6.000	ug/kg	D UJ	6.000	ug/kg	D UJ	7.000	ug/kg	D UJ
1,1-Dichloroethene	6.000	ug/kg	D UJ	6.000	ug/kg	D UJ	7.000	ug/kg	D UJ
1,2-Dichloroethane	6.000	ug/kg	D UJ	6.000	ug/kg	D UJ	7.000	ug/kg	D UJ
1,2-Dichloroethene	6.000	ug/kg	D UJ	6.000	ug/kg	D UJ	7.000	ug/kg	D UJ
1,2-Dichloropropane	6.000	ug/kg	D R	6.000	ug/kg	D R	7.000	ug/kg	D R
2-Butanone	13.000	ug/kg	D UJ	13.000	ug/kg	D UJ	14.000	ug/kg	D R
2-Hexanone	13.000	ug/kg	D R	13.000	ug/kg	D R	14.000	ug/kg	D R
4-Methyl-2-pentanone	13.000	ug/kg	D R	13.000	ug/kg	D R	2.000	ug/kg	D J
Acetone	13.000	ug/kg	D J	10.000	ug/kg	D J	25.000	ug/kg	D UJ
Benzene	6.000	ug/kg	D R	6.000	ug/kg	D R	7.000	ug/kg	D R
Bromodichloromethane	6.000	ug/kg	D R	6.000	ug/kg	D R	7.000	ug/kg	D R

TABLE E-6A
(Continued)

PHASE I - CHEMICAL PARAMETERS

BORING NUMBER	1709			1709			1710		
SAMPLE NUMBER	067064			067071			067029		
	7.5-9			13.5-15			4.5-5		
SAMPLING DATE	06/06/91			06/06/91			05/31/91		
CHEMICAL PARAMETERS	RESULTS	UNITS	L VQ	RESULTS	UNITS	L VQ	RESULTS	UNITS	L VQ
Volatile Organics									
Bromoform	6.000	ug/kg	D R	6.000	ug/kg	D R	7.000	ug/kg	D R
Bromomethane	13.000	ug/kg	D UJ	13.000	ug/kg	D UJ	14.000	ug/kg	D UJ
Carbon Tetrachloride	6.000	ug/kg	D R	6.000	ug/kg	D R	7.000	ug/kg	D R
Carbon disulfide	6.000	ug/kg	D UJ	6.000	ug/kg	D UJ	7.000	ug/kg	D UJ
Chlorobenzene	6.000	ug/kg	D R	6.000	ug/kg	D R	7.000	ug/kg	D R
Chloroethane	13.000	ug/kg	D UJ	13.000	ug/kg	D UJ	14.000	ug/kg	D UJ
Chloroform	6.000	ug/kg	D UJ	6.000	ug/kg	D UJ	7.000	ug/kg	D UJ
Chloromethane	13.000	ug/kg	D UJ	13.000	ug/kg	D UJ	14.000	ug/kg	D UJ
Dibromochloromethane	6.000	ug/kg	D R	6.000	ug/kg	D R	7.000	ug/kg	D R
Ethylbenzene	6.000	ug/kg	D R	6.000	ug/kg	D R	7.000	ug/kg	D R
Methylene chloride	8.000	ug/kg	D UJ	6.000	ug/kg	D UJ	20.000	ug/kg	D UJ
Styrene	6.000	ug/kg	D R	6.000	ug/kg	D R	7.000	ug/kg	D R
Tetrachloroethene	6.000	ug/kg	D R	6.000	ug/kg	D R	7.000	ug/kg	D R
Toluene	6.000	ug/kg	D R	6.000	ug/kg	D R	7.000	ug/kg	D R
Trichloroethene	6.000	ug/kg	D R	6.000	ug/kg	D R	7.000	ug/kg	D R
Vinyl Acetate	13.000	ug/kg	D R	2.000	ug/kg	D J	14.000	ug/kg	D R
Vinyl chloride	13.000	ug/kg	D UJ	13.000	ug/kg	D UJ	14.000	ug/kg	D UJ
Xylenes, Total	6.000	ug/kg	D R	6.000	ug/kg	D R	7.000	ug/kg	D R
cis-1,3-Dichloropropene	6.000	ug/kg	D R	6.000	ug/kg	D R	7.000	ug/kg	D R
trans-1,3-Dichloropropene	6.000	ug/kg	D R	6.000	ug/kg	D R	7.000	ug/kg	D R
Semivolatile Organics									
1,2,4-Trichlorobenzene	440.000	ug/kg	D U	410.000	ug/kg	D U	460.000	ug/kg	D U
1,2-Dichlorobenzene	440.000	ug/kg	D U	410.000	ug/kg	D U	460.000	ug/kg	D U
1,3-Dichlorobenzene	440.000	ug/kg	D U	410.000	ug/kg	D U	460.000	ug/kg	D U
1,4-Dichlorobenzene	440.000	ug/kg	D U	410.000	ug/kg	D U	460.000	ug/kg	D U
2,4,5-Trichlorophenol	2100.000	ug/kg	D U	2000.000	ug/kg	D U	2200.000	ug/kg	D U
2,4,6-Trichlorophenol	440.000	ug/kg	D U	410.000	ug/kg	D U	460.000	ug/kg	D U
2,4-Dichlorophenol	440.000	ug/kg	D U	410.000	ug/kg	D U	460.000	ug/kg	D U
2,4-Dimethylphenol	440.000	ug/kg	D U	410.000	ug/kg	D U	460.000	ug/kg	D U
2,4-Dinitrophenol	2100.000	ug/kg	D UJ	2000.000	ug/kg	D UJ	2200.000	ug/kg	D UJ
2,4-Dinitrotoluene	440.000	ug/kg	D U	410.000	ug/kg	D U	460.000	ug/kg	D U
2,6-Dinitrotoluene	440.000	ug/kg	D U	410.000	ug/kg	D U	460.000	ug/kg	D U
2-Chloronaphthalene	440.000	ug/kg	D U	410.000	ug/kg	D U	460.000	ug/kg	D U
2-Chlorophenol	440.000	ug/kg	D U	410.000	ug/kg	D U	460.000	ug/kg	D U
2-Methylnaphthalene	440.000	ug/kg	D U	410.000	ug/kg	D U	460.000	ug/kg	D U
2-Methylphenol	440.000	ug/kg	D U	410.000	ug/kg	D U	460.000	ug/kg	D U
2-Nitroaniline	2100.000	ug/kg	D U	2000.000	ug/kg	D U	2200.000	ug/kg	D U
2-Nitrophenol	440.000	ug/kg	D U	410.000	ug/kg	D U	460.000	ug/kg	D U
3,3'-Dichlorobenzidine	870.000	ug/kg	D UJ	830.000	ug/kg	D U	920.000	ug/kg	D U
3-Nitroaniline	2100.000	ug/kg	D U	2000.000	ug/kg	D UJ	2200.000	ug/kg	D UJ

TABLE E-6A
(Continued)

PHASE I - CHEMICAL PARAMETERS

BORING NUMBER	1709			1709			1710		
SAMPLE NUMBER	067064			067071			067029		
	7.5-9			13.5-15			4.5-5		
SAMPLING DATE	06/06/91			06/06/91			05/31/91		
CHEMICAL PARAMETERS	RESULTS	UNITS	L VQ	RESULTS	UNITS	L VQ	RESULTS	UNITS	L VQ
Semivolatile Organics									
4,6-Dinitro-2-methylphenol	2100.000	ug/kg	D UJ	2000.000	ug/kg	D U	2200.000	ug/kg	D U
4-Bromophenyl phenyl ether	440.000	ug/kg	D U	410.000	ug/kg	D U	460.000	ug/kg	D U
4-Chloro-3-methylphenol	440.000	ug/kg	D U	410.000	ug/kg	D U	460.000	ug/kg	D U
4-Chlorophenylphenyl ether	440.000	ug/kg	D U	410.000	ug/kg	D U	460.000	ug/kg	D U
4-Methylphenol	440.000	ug/kg	D U	410.000	ug/kg	D U	460.000	ug/kg	D U
4-Nitroaniline	2100.000	ug/kg	D UJ	2000.000	ug/kg	D U	2200.000	ug/kg	D U
4-Nitrophenol	2100.000	ug/kg	D U	2000.000	ug/kg	D U	2200.000	ug/kg	D U
Acenaphthene	440.000	ug/kg	D U	410.000	ug/kg	D U	460.000	ug/kg	D U
Acenaphthylene	440.000	ug/kg	D U	410.000	ug/kg	D U	460.000	ug/kg	D U
Anthracene	440.000	ug/kg	D U	410.000	ug/kg	D U	460.000	ug/kg	D U
Benzo(a)anthracene	440.000	ug/kg	D U	410.000	ug/kg	D U	460.000	ug/kg	D U
Benzo(a)pyrene	440.000	ug/kg	D U	410.000	ug/kg	D U	460.000	ug/kg	D U
Benzo(b)fluoranthene	440.000	ug/kg	D U	410.000	ug/kg	D U	460.000	ug/kg	D U
Benzo(g,h,i)perylene	440.000	ug/kg	D U	410.000	ug/kg	D U	460.000	ug/kg	D U
Benzo(k)fluoranthene	440.000	ug/kg	D U	410.000	ug/kg	D U	460.000	ug/kg	D U
Benzoic acid	2100.000	ug/kg	D UJ	2000.000	ug/kg	D UJ	2200.000	ug/kg	D UJ
Benzyl alcohol	440.000	ug/kg	D U	410.000	ug/kg	D U	460.000	ug/kg	D U
Butyl benzyl phthalate	440.000	ug/kg	D U	410.000	ug/kg	D U	460.000	ug/kg	D U
Chrysene	440.000	ug/kg	D U	410.000	ug/kg	D U	460.000	ug/kg	D U
Di-n-butyl phthalate	440.000	ug/kg	D U	410.000	ug/kg	D U	460.000	ug/kg	D U
Di-n-octyl phthalate	440.000	ug/kg	D U	410.000	ug/kg	D U	460.000	ug/kg	D U
Dibenzo(a,h)anthracene	440.000	ug/kg	D U	410.000	ug/kg	D U	460.000	ug/kg	D U
Dibenzofuran	440.000	ug/kg	D U	410.000	ug/kg	D U	460.000	ug/kg	D U
Diethyl phthalate	440.000	ug/kg	D U	410.000	ug/kg	D U	460.000	ug/kg	D U
Dimethyl phthalate	440.000	ug/kg	D U	410.000	ug/kg	D U	460.000	ug/kg	D U
Fluoranthene	440.000	ug/kg	D U	410.000	ug/kg	D U	460.000	ug/kg	D U
Fluorene	440.000	ug/kg	D U	410.000	ug/kg	D U	460.000	ug/kg	D U
Hexachlorobenzene	440.000	ug/kg	D U	410.000	ug/kg	D U	460.000	ug/kg	D U
Hexachlorobutadiene	440.000	ug/kg	D U	410.000	ug/kg	D U	460.000	ug/kg	D U
Hexachlorocyclopentadiene	440.000	ug/kg	D U	410.000	ug/kg	D U	460.000	ug/kg	D U
Hexachloroethane	440.000	ug/kg	D U	410.000	ug/kg	D U	460.000	ug/kg	D U
Indeno(1,2,3-cd)pyrene	440.000	ug/kg	D U	410.000	ug/kg	D U	460.000	ug/kg	D U
Isophorone	440.000	ug/kg	D U	410.000	ug/kg	D U	460.000	ug/kg	D U
N-Nitroso-di-n-propylamine	440.000	ug/kg	D U	410.000	ug/kg	D U	460.000	ug/kg	D U
N-Nitrosodiphenylamine	440.000	ug/kg	D U	410.000	ug/kg	D U	460.000	ug/kg	D U
Naphthalene	440.000	ug/kg	D U	410.000	ug/kg	D U	460.000	ug/kg	D U
Nitrobenzene	440.000	ug/kg	D U	410.000	ug/kg	D U	460.000	ug/kg	D U
Pentachlorophenol	2100.000	ug/kg	D U	2000.000	ug/kg	D U	2200.000	ug/kg	D U
Phenanthrene	440.000	ug/kg	D U	410.000	ug/kg	D U	460.000	ug/kg	D U
Phenol	440.000	ug/kg	D U	410.000	ug/kg	D U	460.000	ug/kg	D U
Pyrene	440.000	ug/kg	D U	410.000	ug/kg	D U	460.000	ug/kg	D U
bis(2-Chloroethoxy)methane	440.000	ug/kg	D U	410.000	ug/kg	D U	460.000	ug/kg	D U

TABLE E-6A
(Continued)

PHASE I - CHEMICAL PARAMETERS

BORING NUMBER	1709			1709			1710		
SAMPLE NUMBER	067064			067071			067029		
	7.5-9			13.5-15			4.5-5		
SAMPLING DATE	06/06/91			06/06/91			05/31/91		
CHEMICAL PARAMETERS	RESULTS	UNITS	L VQ	RESULTS	UNITS	L VQ	RESULTS	UNITS	L VQ
Semivolatile Organics									
bis(2-Chloroethyl)ether	440.000	ug/kg	D U	410.000	ug/kg	D U	460.000	ug/kg	D U
bis(2-Chloroisopropyl) ether	440.000	ug/kg	D U	410.000	ug/kg	D U	460.000	ug/kg	D U
bis(2-Ethylhexyl) phthalate	440.000	ug/kg	D U	410.000	ug/kg	D U	460.000	ug/kg	D U
p-Chloroaniline	440.000	ug/kg	D U	410.000	ug/kg	D U	460.000	ug/kg	D U
Pesticide Organics/PCBs									
4,4'-DDD	21.000	ug/kg	D U	20.000	ug/kg	D U	23.000	ug/kg	D U
4,4'-DDE	21.000	ug/kg	D U	20.000	ug/kg	D U	23.000	ug/kg	D U
4,4'-DDT	21.000	ug/kg	D U	20.000	ug/kg	D U	23.000	ug/kg	D U
Aldrin	11.000	ug/kg	D U	10.000	ug/kg	D U	11.000	ug/kg	D U
Aroclor-1016	110.000	ug/kg	D U	100.000	ug/kg	D U	110.000	ug/kg	D U
Aroclor-1221	110.000	ug/kg	D U	100.000	ug/kg	D U	110.000	ug/kg	D U
Aroclor-1232	110.000	ug/kg	D U	100.000	ug/kg	D U	110.000	ug/kg	D U
Aroclor-1242	110.000	ug/kg	D U	100.000	ug/kg	D U	110.000	ug/kg	D U
Aroclor-1248	110.000	ug/kg	D U	100.000	ug/kg	D U	110.000	ug/kg	D U
Aroclor-1254	210.000	ug/kg	D U	200.000	ug/kg	D U	230.000	ug/kg	D U
Aroclor-1260	210.000	ug/kg	D U	200.000	ug/kg	D U	230.000	ug/kg	D U
Dieldrin	21.000	ug/kg	D U	20.000	ug/kg	D U	23.000	ug/kg	D U
Endosulfan II	21.000	ug/kg	D U	20.000	ug/kg	D U	23.000	ug/kg	D U
Endosulfan sulfate	21.000	ug/kg	D U	20.000	ug/kg	D U	23.000	ug/kg	D U
Endosulfan-I	11.000	ug/kg	D U	10.000	ug/kg	D U	11.000	ug/kg	D U
Endrin	21.000	ug/kg	D U	20.000	ug/kg	D U	23.000	ug/kg	D U
Endrin ketone	21.000	ug/kg	D U	20.000	ug/kg	D U	23.000	ug/kg	D U
Heptachlor	11.000	ug/kg	D U	10.000	ug/kg	D U	11.000	ug/kg	D U
Heptachlor epoxide	11.000	ug/kg	D U	10.000	ug/kg	D U	11.000	ug/kg	D U
Methoxychlor	110.000	ug/kg	D U	100.000	ug/kg	D U	110.000	ug/kg	D U
Toxaphene	210.000	ug/kg	D U	200.000	ug/kg	D U	230.000	ug/kg	D U
alpha-BHC	11.000	ug/kg	D U	10.000	ug/kg	D U	11.000	ug/kg	D U
alpha-Chlordane	110.000	ug/kg	D U	100.000	ug/kg	D U	110.000	ug/kg	D U
beta-BHC	11.000	ug/kg	D U	10.000	ug/kg	D U	11.000	ug/kg	D U
delta-BHC	11.000	ug/kg	D U	10.000	ug/kg	D U	11.000	ug/kg	D U
gamma-BHC (Lindane)	11.000	ug/kg	D U	10.000	ug/kg	D U	11.000	ug/kg	D U
gamma-Chlordane	110.000	ug/kg	D U	100.000	ug/kg	D U	110.000	ug/kg	D U

0100

5174

TABLE E-6A
(Continued)

PHASE I - CHEMICAL PARAMETERS

BORING NUMBER	1710			1710			1711		
SAMPLE NUMBER	067032			067047			067012		
	9-10.5			28.5-30			4.5-6		
SAMPLING DATE	05/31/91			06/01/91			05/29/91		
CHEMICAL PARAMETERS	RESULTS	UNITS	L VQ	RESULTS	UNITS	L VQ	RESULTS	UNITS	L VQ
Inorganics									
Aluminum	5210.000	mg/kg	D -	2130.000	mg/kg	D -	3690.000	mg/kg	D -
Antimony	8.000	mg/kg	D R	15.000	mg/kg	D J	8.800	mg/kg	D J
Arsenic	20.700	mg/kg	D -	3.000	mg/kg	D -	28.000	mg/kg	D J
Barium	892.000	mg/kg	D -	13.100	mg/kg	D -	360.000	mg/kg	D -
Beryllium	2.400	mg/kg	D -	0.560	mg/kg	D -	3.000	mg/kg	D -
Cadmium	1.000	mg/kg	D -	4.100	mg/kg	D -	0.690	mg/kg	D -
Calcium	6700.000	mg/kg	D -	123000.000	mg/kg	D -	3430.000	mg/kg	D J
Chromium	5.800	mg/kg	D -	5.600	mg/kg	D -	6.500	mg/kg	D -
Cobalt	12.100	mg/kg	D -	5.200	mg/kg	D -	5.700	mg/kg	D -
Copper	26.600	mg/kg	D -	21.300	mg/kg	D -	19.700	mg/kg	D -
Cyanide	0.620	mg/kg	D -	0.420	mg/kg	D -	0.600	mg/kg	D -
Iron	20100.000	mg/kg	D -	7170.000	mg/kg	D -	8930.000	mg/kg	D -
Lead	11.700	mg/kg	D J	6.400	mg/kg	D J	7.000	mg/kg	D -
Magnesium	809.000	mg/kg	D J	25100.000	mg/kg	D J	377.000	mg/kg	D -
Manganese	411.000	mg/kg	D -	319.000	mg/kg	D -	102.000	mg/kg	D -
Mercury	0.120	mg/kg	D UJ	0.110	mg/kg	D UJ	0.120	mg/kg	D U
Molybdenum	3.400	mg/kg	D -	3.600	mg/kg	D -	3.200	mg/kg	D -
Nickel	19.500	mg/kg	D -	17.500	mg/kg	D -	11.000	mg/kg	D -
Potassium	821.000	mg/kg	D -	473.000	mg/kg	D -	456.000	mg/kg	D -
Selenium	3.100	mg/kg	D J	0.450	mg/kg	D UJ	1.600	mg/kg	D J
Silver	2.700	mg/kg	D J	4.300	mg/kg	D J	2.600	mg/kg	D UJ
Sodium	271.000	mg/kg	D -	211.000	mg/kg	D -	108.000	mg/kg	D -
Thallium	0.540	mg/kg	D UJ	0.450	mg/kg	D UJ	1.000	mg/kg	D -
Vanadium	22.600	mg/kg	D -	10.700	mg/kg	D -	24.300	mg/kg	D -
Zinc	12.200	mg/kg	D -	25.800	mg/kg	D -	10.500	mg/kg	D -
Volatile Organics									
1,1,1-Trichloroethane	74.000	ug/kg	D J	6.000	ug/kg	D U	51.000	ug/kg	D J
1,1,2,2-Tetrachloroethane	7.000	ug/kg	D R	6.000	ug/kg	D U	6.000	ug/kg	D R
1,1,2-Trichloroethane	7.000	ug/kg	D R	6.000	ug/kg	D U	6.000	ug/kg	D R
1,1-Dichloroethane	7.000	ug/kg	D UJ	6.000	ug/kg	D U	6.000	ug/kg	D UJ
1,1-Dichloroethene	7.000	ug/kg	D UJ	6.000	ug/kg	D U	6.000	ug/kg	D UJ
1,2-Dichloroethane	7.000	ug/kg	D R	6.000	ug/kg	D U	6.000	ug/kg	D UJ
1,2-Dichloroethene	7.000	ug/kg	D UJ	6.000	ug/kg	D U	6.000	ug/kg	D UJ
1,2-Dichloropropane	7.000	ug/kg	D R	6.000	ug/kg	D U	6.000	ug/kg	D R
2-Butanone	13.000	ug/kg	D R	11.000	ug/kg	D U	13.000	ug/kg	D UJ
2-Hexanone	7.000	ug/kg	D R	11.000	ug/kg	D U	13.000	ug/kg	D R
4-Methyl-2-pentanone	13.000	ug/kg	D R	1.000	ug/kg	D J	13.000	ug/kg	D R
Acetone	75.000	ug/kg	D J	35.000	ug/kg	D R	13.000	ug/kg	D UJ
Benzene	7.000	ug/kg	D R	6.000	ug/kg	D U	6.000	ug/kg	D R
Bromodichloromethane	7.000	ug/kg	D R	6.000	ug/kg	D U	6.000	ug/kg	D R

TABLE E-6A
(Continued)

PHASE I - CHEMICAL PARAMETERS

BORING NUMBER	1710			1710			1711		
SAMPLE NUMBER	067032			067047			067012		
	9-10.5			28.5-30			4.5-6		
SAMPLING DATE	05/31/91			06/01/91			05/29/91		
CHEMICAL PARAMETERS	RESULTS	UNITS	L VQ	RESULTS	UNITS	L VQ	RESULTS	UNITS	L VQ
Volatile Organics									
Bromoform	7.000	ug/kg	D R	6.000	ug/kg	D U	6.000	ug/kg	D R
Bromomethane	13.000	ug/kg	D UJ	11.000	ug/kg	D UJ	13.000	ug/kg	D UJ
Carbon Tetrachloride	7.000	ug/kg	D R	6.000	ug/kg	D U	6.000	ug/kg	D R
Carbon disulfide	7.000	ug/kg	D UJ	6.000	ug/kg	D UJ	6.000	ug/kg	D UJ
Chlorobenzene	7.000	ug/kg	D R	6.000	ug/kg	D U	6.000	ug/kg	D R
Chloroethane	13.000	ug/kg	D UJ	11.000	ug/kg	D U	13.000	ug/kg	D UJ
Chloroform	7.000	ug/kg	D R	6.000	ug/kg	D U	6.000	ug/kg	D UJ
Chloromethane	13.000	ug/kg	D UJ	11.000	ug/kg	D UJ	13.000	ug/kg	D UJ
Dibromochloromethane	7.000	ug/kg	D R	6.000	ug/kg	D U	6.000	ug/kg	D R
Ethylbenzene	7.000	ug/kg	D R	6.000	ug/kg	D U	6.000	ug/kg	D R
Methylene chloride	10.000	ug/kg	D UJ	12.000	ug/kg	D UJ	6.000	ug/kg	D UJ
Styrene	7.000	ug/kg	D R	6.000	ug/kg	D U	6.000	ug/kg	D R
Tetrachloroethene	7.000	ug/kg	D R	6.000	ug/kg	D U	6.000	ug/kg	D R
Toluene	7.000	ug/kg	D R	6.000	ug/kg	D U	6.000	ug/kg	D R
Trichloroethene	7.000	ug/kg	D R	6.000	ug/kg	D U	6.000	ug/kg	D R
Vinyl Acetate	13.000	ug/kg	D R	11.000	ug/kg	D U	13.000	ug/kg	D R
Vinyl chloride	13.000	ug/kg	D UJ	11.000	ug/kg	D U	13.000	ug/kg	D UJ
Xylenes, Total	7.000	ug/kg	D R	6.000	ug/kg	D U	6.000	ug/kg	D R
cis-1,3-Dichloropropene	7.000	ug/kg	D R	6.000	ug/kg	D U	6.000	ug/kg	D R
trans-1,3-Dichloropropene	7.000	ug/kg	D R	6.000	ug/kg	D U	6.000	ug/kg	D R
Semivolatile Organics									
1,2,4-Trichlorobenzene	450.000	ug/kg	D U	370.000	ug/kg	D U	430.000	ug/kg	D U
1,2-Dichlorobenzene	450.000	ug/kg	D U	370.000	ug/kg	D U	430.000	ug/kg	D U
1,3-Dichlorobenzene	450.000	ug/kg	D U	370.000	ug/kg	D U	430.000	ug/kg	D U
1,4-Dichlorobenzene	450.000	ug/kg	D U	370.000	ug/kg	D U	430.000	ug/kg	D U
2,4,5-Trichlorophenol	2200.000	ug/kg	D UJ	1800.000	ug/kg	D U	2100.000	ug/kg	D U
2,4,6-Trichlorophenol	450.000	ug/kg	D UJ	370.000	ug/kg	D U	430.000	ug/kg	D U
2,4-Dichlorophenol	450.000	ug/kg	D UJ	370.000	ug/kg	D U	430.000	ug/kg	D U
2,4-Dimethylphenol	450.000	ug/kg	D U	370.000	ug/kg	D U	430.000	ug/kg	D U
2,4-Dinitrophenol	2200.000	ug/kg	D UJ	1800.000	ug/kg	D UJ	2100.000	ug/kg	D UJ
2,4-Dinitrotoluene	450.000	ug/kg	D U	370.000	ug/kg	D U	430.000	ug/kg	D U
2,6-Dinitrotoluene	450.000	ug/kg	D U	370.000	ug/kg	D U	430.000	ug/kg	D U
2-Chloronaphthalene	450.000	ug/kg	D U	370.000	ug/kg	D U	430.000	ug/kg	D U
2-Chlorophenol	450.000	ug/kg	D UJ	370.000	ug/kg	D U	430.000	ug/kg	D U
2-Methylnaphthalene	450.000	ug/kg	D U	370.000	ug/kg	D U	430.000	ug/kg	D U
2-Methylphenol	450.000	ug/kg	D UJ	370.000	ug/kg	D U	430.000	ug/kg	D U
2-Nitroaniline	2200.000	ug/kg	D U	1800.000	ug/kg	D U	2100.000	ug/kg	D U
2-Nitrophenol	450.000	ug/kg	D UJ	370.000	ug/kg	D U	430.000	ug/kg	D U
3,3'-Dichlorobenzidine	900.000	ug/kg	D U	750.000	ug/kg	D U	870.000	ug/kg	D U
3-Nitroaniline	2200.000	ug/kg	D U	1800.000	ug/kg	D UJ	2100.000	ug/kg	D U

0102

5174

TABLE E-6A
(Continued)

PHASE I - CHEMICAL PARAMETERS

BORING NUMBER	1710			1710			1711		
SAMPLE NUMBER	067032			067047			067012		
	9-10.5			28.5-30			4.5-6		
SAMPLING DATE	05/31/91			06/01/91			05/29/91		
CHEMICAL PARAMETERS	RESULTS	UNITS	L VQ	RESULTS	UNITS	L VQ	RESULTS	UNITS	L VQ
Semivolatile Organics									
4,6-Dinitro-2-methylphenol	2200.000	ug/kg	D UJ	1800.000	ug/kg	D U	2100.000	ug/kg	D UJ
4-Bromophenyl phenyl ether	450.000	ug/kg	D U	370.000	ug/kg	D U	430.000	ug/kg	D U
4-Chloro-3-methylphenol	450.000	ug/kg	D UJ	370.000	ug/kg	D U	430.000	ug/kg	D U
4-Chlorophenylphenyl ether	450.000	ug/kg	D U	370.000	ug/kg	D U	430.000	ug/kg	D U
4-Methylphenol	450.000	ug/kg	D UJ	370.000	ug/kg	D U	430.000	ug/kg	D U
4-Nitroaniline	2200.000	ug/kg	D U	1800.000	ug/kg	D U	2100.000	ug/kg	D U
4-Nitrophenol	2200.000	ug/kg	D UJ	1800.000	ug/kg	D U	2100.000	ug/kg	D U
Acenaphthene	450.000	ug/kg	D U	370.000	ug/kg	D U	430.000	ug/kg	D U
Acenaphthylene	450.000	ug/kg	D U	370.000	ug/kg	D U	430.000	ug/kg	D U
Anthracene	450.000	ug/kg	D U	370.000	ug/kg	D U	430.000	ug/kg	D U
Benzo(a)anthracene	450.000	ug/kg	D U	370.000	ug/kg	D U	430.000	ug/kg	D U
Benzo(a)pyrene	450.000	ug/kg	D U	370.000	ug/kg	D U	430.000	ug/kg	D U
Benzo(b)fluoranthene	450.000	ug/kg	D U	370.000	ug/kg	D U	430.000	ug/kg	D U
Benzo(g,h,i)perylene	450.000	ug/kg	D U	370.000	ug/kg	D U	430.000	ug/kg	D U
Benzo(k)fluoranthene	450.000	ug/kg	D U	370.000	ug/kg	D U	430.000	ug/kg	D U
Benzoic acid	2200.000	ug/kg	D U	1800.000	ug/kg	D UJ	2100.000	ug/kg	D UJ
Benzyl alcohol	450.000	ug/kg	D U	370.000	ug/kg	D U	430.000	ug/kg	D U
Butyl benzyl phthalate	450.000	ug/kg	D U	370.000	ug/kg	D U	430.000	ug/kg	D U
Chrysene	450.000	ug/kg	D U	370.000	ug/kg	D U	430.000	ug/kg	D U
Di-n-butyl phthalate	450.000	ug/kg	D U	370.000	ug/kg	D U	430.000	ug/kg	D U
Di-n-octyl phthalate	450.000	ug/kg	D U	370.000	ug/kg	D U	430.000	ug/kg	D U
Dibenzo(a,h)anthracene	450.000	ug/kg	D U	370.000	ug/kg	D U	430.000	ug/kg	D U
Dibenzofuran	450.000	ug/kg	D U	370.000	ug/kg	D U	430.000	ug/kg	D U
Diethyl phthalate	450.000	ug/kg	D U	370.000	ug/kg	D U	430.000	ug/kg	D U
Dimethyl phthalate	450.000	ug/kg	D U	370.000	ug/kg	D U	430.000	ug/kg	D U
Fluoranthene	450.000	ug/kg	D U	370.000	ug/kg	D U	430.000	ug/kg	D U
Fluorene	450.000	ug/kg	D U	370.000	ug/kg	D U	430.000	ug/kg	D U
Hexachlorobenzene	450.000	ug/kg	D U	370.000	ug/kg	D U	430.000	ug/kg	D U
Hexachlorobutadiene	450.000	ug/kg	D U	370.000	ug/kg	D U	430.000	ug/kg	D U
Hexachlorocyclopentadiene	450.000	ug/kg	D U	370.000	ug/kg	D U	430.000	ug/kg	D U
Hexachloroethane	450.000	ug/kg	D U	370.000	ug/kg	D U	430.000	ug/kg	D U
Indeno(1,2,3-cd)pyrene	450.000	ug/kg	D U	370.000	ug/kg	D U	430.000	ug/kg	D U
Isophorone	450.000	ug/kg	D U	370.000	ug/kg	D U	430.000	ug/kg	D U
N-Nitroso-di-n-propylamine	450.000	ug/kg	D U	370.000	ug/kg	D U	430.000	ug/kg	D U
N-Nitrosodiphenylamine	450.000	ug/kg	D U	370.000	ug/kg	D U	430.000	ug/kg	D U
Naphthalene	450.000	ug/kg	D U	370.000	ug/kg	D U	430.000	ug/kg	D U
Nitrobenzene	450.000	ug/kg	D U	370.000	ug/kg	D U	430.000	ug/kg	D U
Pentachlorophenol	2200.000	ug/kg	D UJ	1800.000	ug/kg	D U	2100.000	ug/kg	D U
Phenanthrene	450.000	ug/kg	D U	370.000	ug/kg	D U	430.000	ug/kg	D U
Phenol	450.000	ug/kg	D UJ	370.000	ug/kg	D U	430.000	ug/kg	D U
Pyrene	450.000	ug/kg	D U	370.000	ug/kg	D U	430.000	ug/kg	D U
bis(2-Chloroethoxy)methane	450.000	ug/kg	D U	370.000	ug/kg	D U	430.000	ug/kg	D U

TABLE E-6A
(Continued)

PHASE I - CHEMICAL PARAMETERS

BORING NUMBER	1710			1710			1711		
SAMPLE NUMBER	067032			067047			067012		
	9-10.5			28.5-30			4.5-6		
SAMPLING DATE	05/31/91			06/01/91			05/29/91		
CHEMICAL PARAMETERS	RESULTS	UNITS	L VQ	RESULTS	UNITS	L VQ	RESULTS	UNITS	L VQ
Semivolatile Organics									
bis(2-Chloroethyl)ether	450.000	ug/kg	D U	370.000	ug/kg	D U	430.000	ug/kg	D U
bis(2-Chloroisopropyl) ether	450.000	ug/kg	D U	370.000	ug/kg	D U	430.000	ug/kg	D U
bis(2-Ethylhexyl) phthalate	450.000	ug/kg	D U	620.000	ug/kg	D -	430.000	ug/kg	D U
p-Chloroaniline	450.000	ug/kg	D U	370.000	ug/kg	D U	430.000	ug/kg	D U
Pesticide Organics/PCBs									
4,4'-DDD	22.000	ug/kg	D U	37.000	ug/kg	D U	21.000	ug/kg	D U
4,4'-DDE	22.000	ug/kg	D U	37.000	ug/kg	D U	21.000	ug/kg	D U
4,4'-DDT	22.000	ug/kg	D U	37.000	ug/kg	D U	21.000	ug/kg	D U
Aldrin	11.000	ug/kg	D U	18.000	ug/kg	D U	11.000	ug/kg	D U
Aroclor-1016	110.000	ug/kg	D U	180.000	ug/kg	D U	110.000	ug/kg	D U
Aroclor-1221	110.000	ug/kg	D U	180.000	ug/kg	D U	110.000	ug/kg	D U
Aroclor-1232	110.000	ug/kg	D U	180.000	ug/kg	D U	110.000	ug/kg	D U
Aroclor-1242	110.000	ug/kg	D U	180.000	ug/kg	D U	110.000	ug/kg	D U
Aroclor-1248	110.000	ug/kg	D U	180.000	ug/kg	D U	110.000	ug/kg	D U
Aroclor-1254	220.000	ug/kg	D U	370.000	ug/kg	D U	210.000	ug/kg	D U
Aroclor-1260	220.000	ug/kg	D U	390.000	ug/kg	D -	210.000	ug/kg	D U
Dieldrin	22.000	ug/kg	D U	37.000	ug/kg	D U	21.000	ug/kg	D U
Endosulfan II	22.000	ug/kg	D U	37.000	ug/kg	D U	21.000	ug/kg	D U
Endosulfan sulfate	22.000	ug/kg	D U	37.000	ug/kg	D U	21.000	ug/kg	D U
Endosulfan-I	11.000	ug/kg	D U	18.000	ug/kg	D U	11.000	ug/kg	D U
Endrin	22.000	ug/kg	D U	37.000	ug/kg	D U	21.000	ug/kg	D U
Endrin ketone	22.000	ug/kg	D U	37.000	ug/kg	D U	21.000	ug/kg	D U
Heptachlor	11.000	ug/kg	D U	18.000	ug/kg	D U	11.000	ug/kg	D U
Heptachlor epoxide	11.000	ug/kg	D U	18.000	ug/kg	D U	11.000	ug/kg	D U
Methoxychlor	110.000	ug/kg	D U	180.000	ug/kg	D U	110.000	ug/kg	D U
Toxaphene	220.000	ug/kg	D U	370.000	ug/kg	D U	210.000	ug/kg	D U
alpha-BHC	11.000	ug/kg	D U	18.000	ug/kg	D U	11.000	ug/kg	D U
alpha-Chlordane	110.000	ug/kg	D U	180.000	ug/kg	D U	110.000	ug/kg	D U
beta-BHC	11.000	ug/kg	D U	18.000	ug/kg	D U	11.000	ug/kg	D U
delta-BHC	11.000	ug/kg	D U	18.000	ug/kg	D U	11.000	ug/kg	D U
gamma-BHC (Lindane)	11.000	ug/kg	D U	18.000	ug/kg	D U	11.000	ug/kg	D U
gamma-Chlordane	110.000	ug/kg	D U	180.000	ug/kg	D U	110.000	ug/kg	D U

TABLE E-6A
(Continued)

PHASE I - CHEMICAL PARAMETERS

BORING NUMBER	1711			1711			1791		
SAMPLE NUMBER	067015			067020			067122		
	9-10.5			18-19.5			28.5-30		
SAMPLING DATE	05/29/91			05/29/91			06/25/91		
CHEMICAL PARAMETERS	RESULTS	UNITS	L VQ	RESULTS	UNITS	L VQ	RESULTS	UNITS	L VQ
Inorganics									
Aluminum	4970.000	mg/kg	D -	8840.000	mg/kg	D -	7210.000	mg/kg	D -
Antimony	10.400	mg/kg	D J	16.300	mg/kg	D J	6.500	mg/kg	D UJ
Arsenic	35.400	mg/kg	D J	6.900	mg/kg	D J	3.600	mg/kg	D J
Barium	373.000	mg/kg	D -	89.600	mg/kg	D -	83.900	mg/kg	D -
Beryllium	2.500	mg/kg	D -	0.770	mg/kg	D -	0.540	mg/kg	D -
Cadmium	0.660	mg/kg	D -	2.000	mg/kg	D -	0.650	mg/kg	D -
Calcium	2510.000	mg/kg	D J	9090.000	mg/kg	D J	7810.000	mg/kg	D -
Chromium	8.400	mg/kg	D -	19.100	mg/kg	D -	13.100	mg/kg	D -
Cobalt	5.700	mg/kg	D -	10.500	mg/kg	D -	9.400	mg/kg	D -
Copper	24.100	mg/kg	D -	44.900	mg/kg	D -	12.100	mg/kg	D -
Cyanide	0.530	mg/kg	D -	0.180	mg/kg	D -	NA		
Iron	6390.000	mg/kg	D -	15900.000	mg/kg	D -	13500.000	mg/kg	D -
Lead	10.700	mg/kg	D -	57.000	mg/kg	D -	10.400	mg/kg	D J
Magnesium	404.000	mg/kg	D -	3930.000	mg/kg	D -	4800.000	mg/kg	D -
Manganese	41.800	mg/kg	D -	261.000	mg/kg	D -	602.000	mg/kg	D J
Mercury	0.180	mg/kg	D -	0.440	mg/kg	D -	0.110	mg/kg	D UJ
Molybdenum	4.000	mg/kg	D -	3.300	mg/kg	D -	8.100	mg/kg	D -
Nickel	9.700	mg/kg	D -	18.300	mg/kg	D -	14.800	mg/kg	D -
Potassium	704.000	mg/kg	D -	966.000	mg/kg	D -	1030.000	mg/kg	D -
Selenium	2.700	mg/kg	D -	0.730	mg/kg	D J	0.490	mg/kg	D U
Silver	2.900	mg/kg	D UJ	4.400	mg/kg	D -	2.800	mg/kg	D J
Sodium	157.000	mg/kg	D -	100.000	mg/kg	D -	91.700	mg/kg	D -
Thallium	1.000	mg/kg	D -	0.550	mg/kg	D U	0.490	mg/kg	D U
Vanadium	33.500	mg/kg	D -	21.700	mg/kg	D -	16.700	mg/kg	D -
Zinc	12.000	mg/kg	D -	102.000	mg/kg	D -	36.700	mg/kg	D -
Volatile Organics									
1,1,1-Trichloroethane	35.000	ug/kg	D J	7.000	ug/kg	D U	6.000	ug/kg	D U
1,1,2,2-Tetrachloroethane	7.000	ug/kg	D R	7.000	ug/kg	D U	6.000	ug/kg	D U
1,1,2-Trichloroethane	7.000	ug/kg	D R	7.000	ug/kg	D U	6.000	ug/kg	D U
1,1-Dichloroethane	7.000	ug/kg	D UJ	7.000	ug/kg	D U	6.000	ug/kg	D U
1,1-Dichloroethene	7.000	ug/kg	D UJ	7.000	ug/kg	D U	6.000	ug/kg	D U
1,2-Dichloroethane	7.000	ug/kg	D UJ	7.000	ug/kg	D U	6.000	ug/kg	D U
1,2-Dichloroethene	7.000	ug/kg	D UJ	7.000	ug/kg	D U	6.000	ug/kg	D U
1,2-Dichloropropane	7.000	ug/kg	D R	7.000	ug/kg	D U	6.000	ug/kg	D U
2-Butanone	14.000	ug/kg	D UJ	15.000	ug/kg	D U	12.000	ug/kg	D U
2-Hexanone	14.000	ug/kg	D R	3.000	ug/kg	D J	12.000	ug/kg	D U
4-Methyl-2-pentanone	14.000	ug/kg	D R	14.000	ug/kg	D U	12.000	ug/kg	D U
Acetone	19.000	ug/kg	D UJ	68.000	ug/kg	D J	61.000	ug/kg	D U
Benzene	7.000	ug/kg	D R	7.000	ug/kg	D U	6.000	ug/kg	D U
Bromodichloromethane	7.000	ug/kg	D R	7.000	ug/kg	D U	6.000	ug/kg	D U

TABLE E-6A
(Continued)

PHASE I - CHEMICAL PARAMETERS

BORING NUMBER	1711					1711					1791				
SAMPLE NUMBER	067015					067020					067122				
	9-10.5					18-19.5					28.5-30				
SAMPLING DATE	05/29/91					05/29/91					06/25/91				
CHEMICAL PARAMETERS	RESULTS	UNITS	L	VQ		RESULTS	UNITS	L	VQ		RESULTS	UNITS	L	VQ	
Volatile Organics															
Bromoform	7.000	ug/kg	D	R		7.000	ug/kg	D	U		6.000	ug/kg	D	UJ	
Bromomethane	14.000	ug/kg	D	UJ		14.000	ug/kg	D	U		12.000	ug/kg	D	U	
Carbon Tetrachloride	7.000	ug/kg	D	R		7.000	ug/kg	D	U		6.000	ug/kg	D	U	
Carbon disulfide	20.000	ug/kg	D	J		7.000	ug/kg	D	U		6.000	ug/kg	D	U	
Chlorobenzene	7.000	ug/kg	D	R		7.000	ug/kg	D	U		6.000	ug/kg	D	U	
Chloroethane	14.000	ug/kg	D	UJ		14.000	ug/kg	D	U		12.000	ug/kg	D	U	
Chloroform	7.000	ug/kg	D	UJ		7.000	ug/kg	D	U		6.000	ug/kg	D	U	
Chloromethane	14.000	ug/kg	D	UJ		14.000	ug/kg	D	UJ		12.000	ug/kg	D	U	
Dibromochloromethane	7.000	ug/kg	D	R		7.000	ug/kg	D	U		6.000	ug/kg	D	U	
Ethylbenzene	7.000	ug/kg	D	R		7.000	ug/kg	D	U		6.000	ug/kg	D	U	
Methylene chloride	25.000	ug/kg	D	UJ		8.000	ug/kg	D	U		6.000	ug/kg	D	U	
Styrene	7.000	ug/kg	D	R		7.000	ug/kg	D	U		6.000	ug/kg	D	U	
Tetrachloroethene	7.000	ug/kg	D	R		7.000	ug/kg	D	U		6.000	ug/kg	D	U	
Toluene	3.000	ug/kg	D	J		7.000	ug/kg	D	U		6.000	ug/kg	D	U	
Trichloroethene	7.000	ug/kg	D	R		7.000	ug/kg	D	U		6.000	ug/kg	D	U	
Vinyl Acetate	14.000	ug/kg	D	R		14.000	ug/kg	D	U		12.000	ug/kg	D	U	
Vinyl chloride	14.000	ug/kg	D	UJ		14.000	ug/kg	D	U		12.000	ug/kg	D	U	
Xylenes, Total	7.000	ug/kg	D	R		7.000	ug/kg	D	U		6.000	ug/kg	D	U	
cis-1,3-Dichloropropene	7.000	ug/kg	D	R		7.000	ug/kg	D	U		6.000	ug/kg	D	U	
trans-1,3-Dichloropropene	7.000	ug/kg	D	R		7.000	ug/kg	D	U		6.000	ug/kg	D	U	
Semivolatile Organics															
1,2,4-Trichlorobenzene	480.000	ug/kg	D	U		460.000	ug/kg	D	U		820.000	ug/kg	D	U	
1,2-Dichlorobenzene	480.000	ug/kg	D	U		460.000	ug/kg	D	U		820.000	ug/kg	D	U	
1,3-Dichlorobenzene	480.000	ug/kg	D	U		460.000	ug/kg	D	U		820.000	ug/kg	D	U	
1,4-Dichlorobenzene	480.000	ug/kg	D	U		460.000	ug/kg	D	U		820.000	ug/kg	D	U	
2,4,5-Trichlorophenol	2300.000	ug/kg	D	U		2200.000	ug/kg	D	U		4000.000	ug/kg	D	U	
2,4,6-Trichlorophenol	480.000	ug/kg	D	U		460.000	ug/kg	D	U		820.000	ug/kg	D	U	
2,4-Dichlorophenol	480.000	ug/kg	D	U		460.000	ug/kg	D	U		820.000	ug/kg	D	U	
2,4-Dimethylphenol	480.000	ug/kg	D	U		460.000	ug/kg	D	U		820.000	ug/kg	D	U	
2,4-Dinitrophenol	2300.000	ug/kg	D	UJ		2200.000	ug/kg	D	UJ		4000.000	ug/kg	D	UJ	
2,4-Dinitrotoluene	480.000	ug/kg	D	U		460.000	ug/kg	D	U		820.000	ug/kg	D	U	
2,6-Dinitrotoluene	480.000	ug/kg	D	U		460.000	ug/kg	D	U		820.000	ug/kg	D	U	
2-Chloronaphthalene	480.000	ug/kg	D	U		460.000	ug/kg	D	U		820.000	ug/kg	D	U	
2-Chlorophenol	480.000	ug/kg	D	U		460.000	ug/kg	D	U		820.000	ug/kg	D	U	
2-Methylnaphthalene	480.000	ug/kg	D	U		460.000	ug/kg	D	U		820.000	ug/kg	D	U	
2-Methylphenol	480.000	ug/kg	D	U		460.000	ug/kg	D	U		820.000	ug/kg	D	U	
2-Nitroaniline	2300.000	ug/kg	D	U		2200.000	ug/kg	D	U		4000.000	ug/kg	D	U	
2-Nitrophenol	480.000	ug/kg	D	U		460.000	ug/kg	D	U		820.000	ug/kg	D	U	
3,3'-Dichlorobenzidine	950.000	ug/kg	D	U		930.000	ug/kg	D	U		1600.000	ug/kg	D	U	
3-Nitroaniline	2300.000	ug/kg	D	U		2200.000	ug/kg	D	U		4000.000	ug/kg	D	UJ	

TABLE E-6A
(Continued)

PHASE I - CHEMICAL PARAMETERS

BORING NUMBER	1711	1711	1791
SAMPLE NUMBER	067015	067020	067122
	9-10.5	18-19.5	28.5-30
SAMPLING DATE	05/29/91	05/29/91	06/25/91

CHEMICAL PARAMETERS	RESULTS	UNITS	L	VQ	RESULTS	UNITS	L	VQ	RESULTS	UNITS	L	VQ
Semivolatile Organics												
4,6-Dinitro-2-methylphenol	2300.000	ug/kg	D	UJ	2200.000	ug/kg	D	UJ	4000.000	ug/kg	D	U
4-Bromophenyl phenyl ether	480.000	ug/kg	D	U	460.000	ug/kg	D	U	820.000	ug/kg	D	U
4-Chloro-3-methylphenol	480.000	ug/kg	D	U	460.000	ug/kg	D	U	820.000	ug/kg	D	U
4-Chlorophenylphenyl ether	480.000	ug/kg	D	U	460.000	ug/kg	D	U	820.000	ug/kg	D	U
4-Methylphenol	480.000	ug/kg	D	U	460.000	ug/kg	D	U	820.000	ug/kg	D	U
4-Nitroaniline	2300.000	ug/kg	D	U	2200.000	ug/kg	D	U	4000.000	ug/kg	D	U
4-Nitrophenol	2300.000	ug/kg	D	U	2200.000	ug/kg	D	U	4000.000	ug/kg	D	U
Acenaphthene	480.000	ug/kg	D	U	460.000	ug/kg	D	U	820.000	ug/kg	D	U
Acenaphthylene	480.000	ug/kg	D	U	460.000	ug/kg	D	U	820.000	ug/kg	D	U
Anthracene	480.000	ug/kg	D	U	460.000	ug/kg	D	U	820.000	ug/kg	D	U
Benzo(a)anthracene	480.000	ug/kg	D	U	460.000	ug/kg	D	U	820.000	ug/kg	D	U
Benzo(a)pyrene	480.000	ug/kg	D	U	460.000	ug/kg	D	U	820.000	ug/kg	D	U
Benzo(b)fluoranthene	480.000	ug/kg	D	U	460.000	ug/kg	D	U	820.000	ug/kg	D	U
Benzo(g,h,i)perylene	480.000	ug/kg	D	U	460.000	ug/kg	D	U	820.000	ug/kg	D	U
Benzo(k)fluoranthene	480.000	ug/kg	D	U	460.000	ug/kg	D	U	820.000	ug/kg	D	U
Benzoic acid	2300.000	ug/kg	D	UJ	150.000	ug/kg	D	J	4000.000	ug/kg	D	U
Benzyl alcohol	480.000	ug/kg	D	U	460.000	ug/kg	D	U	820.000	ug/kg	D	U
Butyl benzyl phthalate	480.000	ug/kg	D	U	460.000	ug/kg	D	U	820.000	ug/kg	D	U
Chrysene	480.000	ug/kg	D	U	460.000	ug/kg	D	U	820.000	ug/kg	D	U
Di-n-butyl phthalate	480.000	ug/kg	D	U	460.000	ug/kg	D	U	820.000	ug/kg	D	U
Di-n-octyl phthalate	480.000	ug/kg	D	U	460.000	ug/kg	D	U	820.000	ug/kg	D	U
Dibenzo(a,h)anthracene	480.000	ug/kg	D	U	460.000	ug/kg	D	U	820.000	ug/kg	D	U
Dibenzofuran	480.000	ug/kg	D	U	460.000	ug/kg	D	U	820.000	ug/kg	D	U
Diethyl phthalate	480.000	ug/kg	D	U	460.000	ug/kg	D	U	820.000	ug/kg	D	U
Dimethyl phthalate	480.000	ug/kg	D	U	460.000	ug/kg	D	U	820.000	ug/kg	D	U
Fluoranthene	480.000	ug/kg	D	U	460.000	ug/kg	D	U	820.000	ug/kg	D	U
Fluorene	480.000	ug/kg	D	U	460.000	ug/kg	D	U	820.000	ug/kg	D	U
Hexachlorobenzene	480.000	ug/kg	D	U	460.000	ug/kg	D	U	820.000	ug/kg	D	U
Hexachlorobutadiene	480.000	ug/kg	D	U	460.000	ug/kg	D	U	820.000	ug/kg	D	U
Hexachlorocyclopentadiene	480.000	ug/kg	D	U	460.000	ug/kg	D	U	820.000	ug/kg	D	U
Hexachloroethane	480.000	ug/kg	D	U	460.000	ug/kg	D	U	820.000	ug/kg	D	U
Indeno(1,2,3-cd)pyrene	480.000	ug/kg	D	U	460.000	ug/kg	D	U	820.000	ug/kg	D	U
Isophorone	480.000	ug/kg	D	U	460.000	ug/kg	D	U	820.000	ug/kg	D	U
N-Nitroso-di-n-propylamine	480.000	ug/kg	D	U	460.000	ug/kg	D	U	820.000	ug/kg	D	U
N-Nitrosodiphenylamine	480.000	ug/kg	D	U	460.000	ug/kg	D	U	820.000	ug/kg	D	U
Naphthalene	480.000	ug/kg	D	U	460.000	ug/kg	D	U	820.000	ug/kg	D	U
Nitrobenzene	480.000	ug/kg	D	U	460.000	ug/kg	D	U	820.000	ug/kg	D	U
Pentachlorophenol	2300.000	ug/kg	D	U	2200.000	ug/kg	D	U	4000.000	ug/kg	D	U
Phenanthrene	480.000	ug/kg	D	U	460.000	ug/kg	D	U	820.000	ug/kg	D	U
Phenol	480.000	ug/kg	D	U	460.000	ug/kg	D	U	820.000	ug/kg	D	U
Pyrene	480.000	ug/kg	D	U	460.000	ug/kg	D	U	820.000	ug/kg	D	U
bis(2-Chloroethoxy)methane	480.000	ug/kg	D	U	460.000	ug/kg	D	U	820.000	ug/kg	D	U

TABLE E-6A
(Continued)

PHASE I - CHEMICAL PARAMETERS

BORING NUMBER	1711			1711			1791		
SAMPLE NUMBER	067015			067020			067122		
	9-10.5			18-19.5			28.5-30		
SAMPLING DATE	05/29/91			05/29/91			06/25/91		
CHEMICAL PARAMETERS	RESULTS	UNITS	L VQ	RESULTS	UNITS	L VQ	RESULTS	UNITS	L VQ
Semivolatile Organics									
bis(2-Chloroethyl)ether	480.000	ug/kg	D U	460.000	ug/kg	D U	820.000	ug/kg	D U
bis(2-Chloroisopropyl) ether	480.000	ug/kg	D U	460.000	ug/kg	D U	820.000	ug/kg	D UJ
bis(2-Ethylhexyl) phthalate	480.000	ug/kg	D U	460.000	ug/kg	D U	820.000	ug/kg	D U
p-Chloroaniline	480.000	ug/kg	D U	460.000	ug/kg	D U	820.000	ug/kg	D U
Pesticide Organics/PCBs									
4,4'-DDD	23.000	ug/kg	D U	22.000	ug/kg	D U	20.000	ug/kg	D U
4,4'-DDE	23.000	ug/kg	D U	22.000	ug/kg	D U	20.000	ug/kg	D U
4,4'-DDT	23.000	ug/kg	D U	22.000	ug/kg	D U	20.000	ug/kg	D U
Aldrin	12.000	ug/kg	D U	11.000	ug/kg	D U	9.900	ug/kg	D U
Aroclor-1016	120.000	ug/kg	D U	110.000	ug/kg	D U	99.000	ug/kg	D U
Aroclor-1221	120.000	ug/kg	D U	110.000	ug/kg	D U	99.000	ug/kg	D U
Aroclor-1232	120.000	ug/kg	D U	110.000	ug/kg	D U	99.000	ug/kg	D U
Aroclor-1242	120.000	ug/kg	D U	110.000	ug/kg	D U	99.000	ug/kg	D U
Aroclor-1248	120.000	ug/kg	D U	110.000	ug/kg	D U	99.000	ug/kg	D U
Aroclor-1254	230.000	ug/kg	D U	210.000	ug/kg	D J	200.000	ug/kg	D U
Aroclor-1260	230.000	ug/kg	D U	220.000	ug/kg	D U	200.000	ug/kg	D U
Dieldrin	23.000	ug/kg	D U	22.000	ug/kg	D U	20.000	ug/kg	D U
Endosulfan II	23.000	ug/kg	D U	22.000	ug/kg	D U	20.000	ug/kg	D U
Endosulfan sulfate	14.000	ug/kg	D U	22.000	ug/kg	D U	20.000	ug/kg	D U
Endosulfan-I	12.000	ug/kg	D U	11.000	ug/kg	D U	9.900	ug/kg	D U
Endrin	23.000	ug/kg	D U	22.000	ug/kg	D U	20.000	ug/kg	D U
Endrin ketone	23.000	ug/kg	D U	22.000	ug/kg	D U	20.000	ug/kg	D U
Heptachlor	12.000	ug/kg	D U	11.000	ug/kg	D U	9.900	ug/kg	D U
Heptachlor epoxide	12.000	ug/kg	D U	11.000	ug/kg	D U	9.900	ug/kg	D U
Methoxychlor	120.000	ug/kg	D U	110.000	ug/kg	D U	99.000	ug/kg	D U
Toxaphene	230.000	ug/kg	D U	220.000	ug/kg	D U	200.000	ug/kg	D U
alpha-BHC	12.000	ug/kg	D U	11.000	ug/kg	D U	9.900	ug/kg	D U
alpha-Chlordane	120.000	ug/kg	D U	110.000	ug/kg	D U	99.000	ug/kg	D U
beta-BHC	12.000	ug/kg	D U	11.000	ug/kg	D U	9.900	ug/kg	D U
delta-BHC	12.000	ug/kg	D U	11.000	ug/kg	D U	9.900	ug/kg	D U
gamma-BHC (Lindane)	12.000	ug/kg	D U	11.000	ug/kg	D U	9.900	ug/kg	D U
gamma-Chlordane	120.000	ug/kg	D U	110.000	ug/kg	D U	99.000	ug/kg	D U

0108

5174

TABLE E-6A
(Continued)

PHASE I - CHEMICAL PARAMETERS

BORING NUMBER	1849			1849			1849		
SAMPLE NUMBER	067604			067609			067618		
	6-7.5			13.5-15			28.5-30		
SAMPLING DATE	02/22/92			02/22/92			02/22/92		
CHEMICAL PARAMETERS	RESULTS	UNITS	L VQ	RESULTS	UNITS	L VQ	RESULTS	UNITS	L VQ
Volatile Organics									
1,1,1-Trichloroethane	18.000	ug/kg	D J	170.000	ug/kg	D J	NA		
1,1,2,2-Tetrachloroethane	7.000	ug/kg	D UJ	6.000	ug/kg	D R	NA		
1,1,2-Trichloroethane	7.000	ug/kg	D UJ	6.000	ug/kg	D R	NA		
1,1-Dichloroethane	7.000	ug/kg	D UJ	6.000	ug/kg	D R	NA		
1,1-Dichloroethene	7.000	ug/kg	D UJ	6.000	ug/kg	D R	NA		
1,2-Dichloroethane	7.000	ug/kg	D UJ	6.000	ug/kg	D R	NA		
1,2-Dichloroethene	7.000	ug/kg	D UJ	6.000	ug/kg	D R	NA		
1,2-Dichloropropane	7.000	ug/kg	D UJ	6.000	ug/kg	D R	NA		
2-Butanone	14.000	ug/kg	D UJ	12.000	ug/kg	D R	NA		
2-Hexanone	14.000	ug/kg	D UJ	26.000	ug/kg	D R	NA		
4-Methyl-2-pentanone	7.000	ug/kg	D UJ	12.000	ug/kg	D R	NA		
Acetone	33.000	ug/kg	D UJ	12.000	ug/kg	D R	NA		
Benzene	7.000	ug/kg	D UJ	6.000	ug/kg	D R	NA		
Bromodichloromethane	7.000	ug/kg	D UJ	6.000	ug/kg	D R	NA		
Bromoform	7.000	ug/kg	D UJ	6.000	ug/kg	D R	NA		
Bromomethane	14.000	ug/kg	D UJ	12.000	ug/kg	D R	NA		
Carbon Tetrachloride	7.000	ug/kg	D UJ	6.000	ug/kg	D R	NA		
Carbon disulfide	7.000	ug/kg	D UJ	6.000	ug/kg	D R	NA		
Chlorobenzene	7.000	ug/kg	D UJ	6.000	ug/kg	D R	NA		
Chloroethane	14.000	ug/kg	D UJ	12.000	ug/kg	D R	NA		
Chloroform	7.000	ug/kg	D UJ	6.000	ug/kg	D R	NA		
Chloromethane	14.000	ug/kg	D UJ	12.000	ug/kg	D R	NA		
Dibromochloromethane	7.000	ug/kg	D UJ	6.000	ug/kg	D R	NA		
Ethylbenzene	7.000	ug/kg	D UJ	6.000	ug/kg	D R	NA		
Methylene chloride	89.000	ug/kg	D UJ	7.000	ug/kg	D R	NA		
Styrene	7.000	ug/kg	D UJ	6.000	ug/kg	D R	NA		
Tetrachloroethene	7.000	ug/kg	D UJ	6.000	ug/kg	D R	NA		
Toluene	20.000	ug/kg	D J	13.000	ug/kg	D J	NA		
Trichloroethene	7.000	ug/kg	D UJ	6.000	ug/kg	D R	NA		
Vinyl Acetate	14.000	ug/kg	D UJ	12.000	ug/kg	D R	NA		
Vinyl chloride	14.000	ug/kg	D UJ	12.000	ug/kg	D R	NA		
Xylenes, Total	7.000	ug/kg	D UJ	6.000	ug/kg	D R	NA		
cis-1,3-Dichloropropene	7.000	ug/kg	D UJ	6.000	ug/kg	D R	NA		
trans-1,3-Dichloropropene	7.000	ug/kg	D UJ	6.000	ug/kg	D R	NA		
Semivolatile Organics									
1,2,4-Trichlorobenzene	460.000	ug/kg	D U	420.000	ug/kg	D U	NA		
1,2-Dichlorobenzene	460.000	ug/kg	D U	420.000	ug/kg	D U	NA		
1,3-Dichlorobenzene	460.000	ug/kg	D U	420.000	ug/kg	D U	NA		
1,4-Dichlorobenzene	460.000	ug/kg	D U	420.000	ug/kg	D U	NA		
2,4,5-Trichlorophenol	2200.000	ug/kg	D U	2000.000	ug/kg	D U	NA		

TABLE E-6A
(Continued)

PHASE I - CHEMICAL PARAMETERS

BORING NUMBER	1849			1849			1849		
SAMPLE NUMBER	067604			067609			067618		
	6-7.5			13.5-15			28.5-30		
SAMPLING DATE	02/22/92			02/22/92			02/22/92		
CHEMICAL PARAMETERS	RESULTS	UNITS	L VQ	RESULTS	UNITS	L VQ	RESULTS	UNITS	L VQ
Semivolatile Organics									
2,4,6-Trichlorophenol	460.000	ug/kg	D U	420.000	ug/kg	D U	NA		
2,4-Dichlorophenol	460.000	ug/kg	D U	420.000	ug/kg	D U	NA		
2,4-Dimethylphenol	460.000	ug/kg	D U	420.000	ug/kg	D U	NA		
2,4-Dinitrophenol	2200.000	ug/kg	D UJ	2000.000	ug/kg	D UJ	NA		
2,4-Dinitrotoluene	460.000	ug/kg	D U	420.000	ug/kg	D U	NA		
2,6-Dinitrotoluene	460.000	ug/kg	D U	420.000	ug/kg	D U	NA		
2-Chloronaphthalene	460.000	ug/kg	D U	420.000	ug/kg	D U	NA		
2-Chlorophenol	460.000	ug/kg	D U	420.000	ug/kg	D U	NA		
2-Methylnaphthalene	50.000	ug/kg	D J	79.000	ug/kg	D J	NA		
2-Methylphenol	460.000	ug/kg	D U	420.000	ug/kg	D U	NA		
2-Nitroaniline	2200.000	ug/kg	D U	2000.000	ug/kg	D U	NA		
2-Nitrophenol	460.000	ug/kg	D UJ	420.000	ug/kg	D UJ	NA		
3,3'-Dichlorobenzidine	930.000	ug/kg	D UJ	830.000	ug/kg	D UJ	NA		
3-Nitroaniline	2200.000	ug/kg	D U	2000.000	ug/kg	D U	NA		
4,6-Dinitro-2-methylphenol	2200.000	ug/kg	D UJ	2000.000	ug/kg	D UJ	NA		
4-Bromophenyl phenyl ether	460.000	ug/kg	D U	420.000	ug/kg	D U	NA		
4-Chloro-3-methylphenol	460.000	ug/kg	D U	420.000	ug/kg	D U	NA		
4-Chlorophenylphenyl ether	460.000	ug/kg	D U	420.000	ug/kg	D U	NA		
4-Methylphenol	460.000	ug/kg	D U	420.000	ug/kg	D U	NA		
4-Nitroaniline	2200.000	ug/kg	D U	2000.000	ug/kg	D U	NA		
4-Nitrophenol	2200.000	ug/kg	D UJ	2000.000	ug/kg	D U	NA		
Acenaphthene	460.000	ug/kg	D U	420.000	ug/kg	D U	NA		
Acenaphthylene	460.000	ug/kg	D U	420.000	ug/kg	D U	NA		
Anthracene	460.000	ug/kg	D U	420.000	ug/kg	D U	NA		
Benzo(a)anthracene	460.000	ug/kg	D U	420.000	ug/kg	D U	NA		
Benzo(a)pyrene	460.000	ug/kg	D U	420.000	ug/kg	D U	NA		
Benzo(b)fluoranthene	460.000	ug/kg	D U	420.000	ug/kg	D U	NA		
Benzo(g,h,i)perylene	460.000	ug/kg	D U	420.000	ug/kg	D U	NA		
Benzo(k)fluoranthene	460.000	ug/kg	D U	420.000	ug/kg	D U	NA		
Benzoic acid	2200.000	ug/kg	D U	2000.000	ug/kg	D UJ	NA		
Benzyl alcohol	460.000	ug/kg	D U	420.000	ug/kg	D UJ	NA		
Butyl benzyl phthalate	460.000	ug/kg	D U	420.000	ug/kg	D U	NA		
Chrysene	460.000	ug/kg	D U	420.000	ug/kg	D U	NA		
Di-n-butyl phthalate	460.000	ug/kg	D U	46.000	ug/kg	D J	NA		
Di-n-octyl phthalate	460.000	ug/kg	D U	420.000	ug/kg	D U	NA		
Dibenzo(a,h)anthracene	460.000	ug/kg	D U	420.000	ug/kg	D U	NA		
Dibenzofuran	460.000	ug/kg	D U	420.000	ug/kg	D U	NA		
Diethyl phthalate	460.000	ug/kg	D U	420.000	ug/kg	D U	NA		
Dimethyl phthalate	460.000	ug/kg	D U	420.000	ug/kg	D U	NA		
Fluoranthene	460.000	ug/kg	D U	420.000	ug/kg	D U	NA		
Fluorene	460.000	ug/kg	D U	420.000	ug/kg	D U	NA		
Hexachlorobenzene	460.000	ug/kg	D U	420.000	ug/kg	D U	NA		

0110

5174

TABLE E-6A
(Continued)

PHASE I - CHEMICAL PARAMETERS

BORING NUMBER	1849			1849			1849		
SAMPLE NUMBER	067604			067609			067618		
	6-7.5			13.5-15			28.5-30		
SAMPLING DATE	02/22/92			02/22/92			02/22/92		
CHEMICAL PARAMETERS	RESULTS	UNITS	L VQ	RESULTS	UNITS	L VQ	RESULTS	UNITS	L VQ
Semivolatile Organics									
Hexachlorobutadiene	460.000	ug/kg	D U	420.000	ug/kg	D U	NA		
Hexachlorocyclopentadiene	460.000	ug/kg	D UJ	420.000	ug/kg	D UJ	NA		
Hexachloroethane	460.000	ug/kg	D U	420.000	ug/kg	D U	NA		
Indeno(1,2,3-cd)pyrene	460.000	ug/kg	D U	420.000	ug/kg	D U	NA		
Isophorone	460.000	ug/kg	D U	420.000	ug/kg	D U	NA		
N-Nitroso-di-n-propylamine	460.000	ug/kg	D U	420.000	ug/kg	D UJ	NA		
N-Nitrosodiphenylamine	460.000	ug/kg	D U	420.000	ug/kg	D U	NA		
Naphthalene	460.000	ug/kg	D U	53.000	ug/kg	D J	NA		
Nitrobenzene	460.000	ug/kg	D U	420.000	ug/kg	D U	NA		
Pentachlorophenol	2200.000	ug/kg	D U	2000.000	ug/kg	D U	NA		
Phenanthrene	460.000	ug/kg	D U	420.000	ug/kg	D U	NA		
Phenol	460.000	ug/kg	D U	420.000	ug/kg	D U	NA		
Pyrene	460.000	ug/kg	D U	420.000	ug/kg	D U	NA		
bis(2-Chloroethoxy)methane	460.000	ug/kg	D U	420.000	ug/kg	D U	NA		
bis(2-Chloroethyl)ether	460.000	ug/kg	D U	420.000	ug/kg	D U	NA		
bis(2-Chloroisopropyl) ether	460.000	ug/kg	D U	420.000	ug/kg	D U	NA		
bis(2-Ethylhexyl) phthalate	460.000	ug/kg	D U	420.000	ug/kg	D U	NA		
p-Chloroaniline	460.000	ug/kg	D U	420.000	ug/kg	D U	NA		
General Chemistry									
Total Organic Carbon	192011.000	mg/kg	C -	186725.000	mg/kg	C -	11500.000	mg/kg	C -

TABLE E-6A
(Continued)

PHASE I - CHEMICAL PARAMETERS

BORING NUMBER	1850			1850			1850		
SAMPLE NUMBER	067627			067632			067633		
	6-7.5			13.5-15			15-16.5		
SAMPLING DATE	02/23/92			02/23/92			02/23/92		
CHEMICAL PARAMETERS	RESULTS	UNITS	L VQ	RESULTS	UNITS	L VQ	RESULTS	UNITS	L VQ
Volatile Organics									
1,1,1-Trichloroethane	69.000	ug/kg	D R	37.000	ug/kg	D J	NA		
1,1,2,2-Tetrachloroethane	6.000	ug/kg	D R	6.000	ug/kg	D R	NA		
1,1,2-Trichloroethane	6.000	ug/kg	D R	6.000	ug/kg	D R	NA		
1,1-Dichloroethane	6.000	ug/kg	D R	6.000	ug/kg	D R	NA		
1,1-Dichloroethene	6.000	ug/kg	D R	6.000	ug/kg	D R	NA		
1,2-Dichloroethane	6.000	ug/kg	D R	6.000	ug/kg	D R	NA		
1,2-Dichloroethene	6.000	ug/kg	D R	6.000	ug/kg	D R	NA		
1,2-Dichloropropane	6.000	ug/kg	D R	6.000	ug/kg	D R	NA		
2-Butanone	12.000	ug/kg	D R	12.000	ug/kg	D R	NA		
2-Hexanone	12.000	ug/kg	D R	12.000	ug/kg	D R	NA		
4-Methyl-2-pentanone	12.000	ug/kg	D R	12.000	ug/kg	D R	NA		
Acetone	2.000	ug/kg	D R	12.000	ug/kg	D R	NA		
Benzene	6.000	ug/kg	D R	6.000	ug/kg	D R	NA		
Bromodichloromethane	6.000	ug/kg	D R	6.000	ug/kg	D R	NA		
Bromoform	6.000	ug/kg	D R	6.000	ug/kg	D R	NA		
Bromomethane	12.000	ug/kg	D R	12.000	ug/kg	D R	NA		
Carbon Tetrachloride	6.000	ug/kg	D R	6.000	ug/kg	D R	NA		
Carbon disulfide	6.000	ug/kg	D R	6.000	ug/kg	D R	NA		
Chlorobenzene	6.000	ug/kg	D R	6.000	ug/kg	D R	NA		
Chloroethane	12.000	ug/kg	D R	12.000	ug/kg	D R	NA		
Chloroform	6.000	ug/kg	D R	6.000	ug/kg	D R	NA		
Chloromethane	12.000	ug/kg	D R	12.000	ug/kg	D R	NA		
Dibromochloromethane	6.000	ug/kg	D R	6.000	ug/kg	D R	NA		
Ethylbenzene	6.000	ug/kg	D R	6.000	ug/kg	D R	NA		
Methylene chloride	19.000	ug/kg	D R	14.000	ug/kg	D R	NA		
Styrene	2.000	ug/kg	D J	6.000	ug/kg	D R	NA		
Tetrachloroethene	6.000	ug/kg	D R	6.000	ug/kg	D R	NA		
Toluene	38.000	ug/kg	D J	110.000	ug/kg	D J	NA		
Trichloroethene	6.000	ug/kg	D R	6.000	ug/kg	D R	NA		
Vinyl Acetate	12.000	ug/kg	D R	12.000	ug/kg	D R	NA		
Vinyl chloride	12.000	ug/kg	D R	12.000	ug/kg	D R	NA		
Xylenes, Total	6.000	ug/kg	D R	6.000	ug/kg	D R	NA		
cis-1,3-Dichloropropene	6.000	ug/kg	D R	6.000	ug/kg	D R	NA		
trans-1,3-Dichloropropene	6.000	ug/kg	D R	6.000	ug/kg	D R	NA		
Semivolatile Organics									
1,2,4-Trichlorobenzene	410.000	ug/kg	D U	400.000	ug/kg	D U	NA		
1,2-Dichlorobenzene	410.000	ug/kg	D U	400.000	ug/kg	D U	NA		
1,3-Dichlorobenzene	410.000	ug/kg	D U	400.000	ug/kg	D U	NA		
1,4-Dichlorobenzene	410.000	ug/kg	D U	400.000	ug/kg	D U	NA		
2,4,5-Trichlorophenol	2000.000	ug/kg	D U	1900.000	ug/kg	D U	NA		

TABLE E-6A
(Continued)

PHASE I - CHEMICAL PARAMETERS

BORING NUMBER	1850			1850			1850		
SAMPLE NUMBER	067627			067632			067633		
	6-7.5			13.5-15			15-16.5		
SAMPLING DATE	02/23/92			02/23/92			02/23/92		
CHEMICAL PARAMETERS	RESULTS	UNITS	L VQ	RESULTS	UNITS	L VQ	RESULTS	UNITS	L VQ
Semivolatile Organics									
2,4,6-Trichlorophenol	410.000	ug/kg	D U	400.000	ug/kg	D U	NA		
2,4-Dichlorophenol	410.000	ug/kg	D U	400.000	ug/kg	D U	NA		
2,4-Dimethylphenol	410.000	ug/kg	D U	400.000	ug/kg	D U	NA		
2,4-Dinitrophenol	2000.000	ug/kg	D U	1900.000	ug/kg	D U	NA		
2,4-Dinitrotoluene	410.000	ug/kg	D U	400.000	ug/kg	D U	NA		
2,6-Dinitrotoluene	410.000	ug/kg	D U	400.000	ug/kg	D U	NA		
2-Chloronaphthalene	410.000	ug/kg	D U	400.000	ug/kg	D U	NA		
2-Chlorophenol	410.000	ug/kg	D U	400.000	ug/kg	D U	NA		
2-Methylnaphthalene	89.000	ug/kg	D J	66.000	ug/kg	D J	NA		
2-Methylphenol	410.000	ug/kg	D U	400.000	ug/kg	D U	NA		
2-Nitroaniline	2000.000	ug/kg	D U	1900.000	ug/kg	D U	NA		
2-Nitrophenol	410.000	ug/kg	D UJ	400.000	ug/kg	D UJ	NA		
3,3'-Dichlorobenzidine	810.000	ug/kg	D U	800.000	ug/kg	D U	NA		
3-Nitroaniline	2000.000	ug/kg	D U	1900.000	ug/kg	D U	NA		
4,6-Dinitro-2-methylphenol	2000.000	ug/kg	D U	1900.000	ug/kg	D U	NA		
4-Bromophenyl phenyl ether	410.000	ug/kg	D U	400.000	ug/kg	D U	NA		
4-Chloro-3-methylphenol	410.000	ug/kg	D U	400.000	ug/kg	D U	NA		
4-Chlorophenylphenyl ether	410.000	ug/kg	D U	400.000	ug/kg	D UJ	NA		
4-Methylphenol	410.000	ug/kg	D U	400.000	ug/kg	D U	NA		
4-Nitroaniline	2000.000	ug/kg	D U	1900.000	ug/kg	D U	NA		
4-Nitrophenol	2000.000	ug/kg	D UJ	1900.000	ug/kg	D UJ	NA		
Acenaphthene	410.000	ug/kg	D U	400.000	ug/kg	D U	NA		
Acenaphthylene	410.000	ug/kg	D U	400.000	ug/kg	D U	NA		
Anthracene	49.000	ug/kg	D J	400.000	ug/kg	D U	NA		
Benzo(a)anthracene	410.000	ug/kg	D U	400.000	ug/kg	D U	NA		
Benzo(a)pyrene	410.000	ug/kg	D U	400.000	ug/kg	D U	NA		
Benzo(b)fluoranthene	410.000	ug/kg	D U	400.000	ug/kg	D U	NA		
Benzo(g,h,i)perylene	410.000	ug/kg	D U	400.000	ug/kg	D U	NA		
Benzo(k)fluoranthene	410.000	ug/kg	D U	400.000	ug/kg	D U	NA		
Benzoic acid	2000.000	ug/kg	D U	1900.000	ug/kg	D U	NA		
Benzyl alcohol	410.000	ug/kg	D U	400.000	ug/kg	D U	NA		
Butyl benzyl phthalate	410.000	ug/kg	D U	400.000	ug/kg	D U	NA		
Chrysene	410.000	ug/kg	D U	400.000	ug/kg	D U	NA		
Di-n-butyl phthalate	410.000	ug/kg	D U	400.000	ug/kg	D U	NA		
Di-n-octyl phthalate	410.000	ug/kg	D U	400.000	ug/kg	D U	NA		
Dibenzo(a,h)anthracene	410.000	ug/kg	D U	400.000	ug/kg	D U	NA		
Dibenzofuran	410.000	ug/kg	D U	400.000	ug/kg	D U	NA		
Diethyl phthalate	410.000	ug/kg	D U	400.000	ug/kg	D U	NA		
Dimethyl phthalate	410.000	ug/kg	D U	400.000	ug/kg	D U	NA		
Fluoranthene	410.000	ug/kg	D U	400.000	ug/kg	D U	NA		
Fluorene	410.000	ug/kg	D U	400.000	ug/kg	D U	NA		
Hexachlorobenzene	410.000	ug/kg	D U	400.000	ug/kg	D U	NA		

TABLE E-6A
(Continued)

PHASE I - CHEMICAL PARAMETERS

BORING NUMBER	1850			1850			1850		
SAMPLE NUMBER	067627			067632			067633		
	6-7.5			13.5-15			15-16.5		
SAMPLING DATE	02/23/92			02/23/92			02/23/92		
CHEMICAL PARAMETERS	RESULTS	UNITS	L VQ	RESULTS	UNITS	L VQ	RESULTS	UNITS	L VQ
Semivolatile Organics									
Hexachlorobutadiene	410.000	ug/kg	D U	400.000	ug/kg	D U	NA		
Hexachlorocyclopentadiene	410.000	ug/kg	D U	400.000	ug/kg	D U	NA		
Hexachloroethane	410.000	ug/kg	D U	400.000	ug/kg	D U	NA		
Indeno(1,2,3-cd)pyrene	410.000	ug/kg	D U	400.000	ug/kg	D U	NA		
Isophorone	410.000	ug/kg	D U	400.000	ug/kg	D U	NA		
N-Nitroso-di-n-propylamine	410.000	ug/kg	D U	400.000	ug/kg	D U	NA		
N-Nitrosodiphenylamine	410.000	ug/kg	D U	400.000	ug/kg	D U	NA		
Naphthalene	53.000	ug/kg	D J	400.000	ug/kg	D U	NA		
Nitrobenzene	410.000	ug/kg	D U	400.000	ug/kg	D U	NA		
Pentachlorophenol	2000.000	ug/kg	D U	1900.000	ug/kg	D U	NA		
Phenanthrene	49.000	ug/kg	D J	41.000	ug/kg	D J	NA		
Phenol	410.000	ug/kg	D U	400.000	ug/kg	D U	NA		
Pyrene	410.000	ug/kg	D U	400.000	ug/kg	D U	NA		
bis(2-Chloroethoxy)methane	410.000	ug/kg	D U	400.000	ug/kg	D U	NA		
bis(2-Chloroethyl)ether	410.000	ug/kg	D U	400.000	ug/kg	D U	NA		
bis(2-Chloroisopropyl) ether	410.000	ug/kg	D U	400.000	ug/kg	D U	NA		
bis(2-Ethylhexyl) phthalate	410.000	ug/kg	D U	400.000	ug/kg	D U	NA		
p-Chloroaniline	410.000	ug/kg	D U	400.000	ug/kg	D U	NA		
General Chemistry									
Total Organic Carbon	173349.000	mg/kg	C -	56753.000	mg/kg	C -	7840.000	mg/kg	C -

C114

5174

TABLE E-6A
(Continued)

PHASE II - RADIOLOGICAL PARAMETERS

BORING NUMBER	11006			11051			11051		
SAMPLE NUMBER	113492			116438			116441		
	22.5 - 24			21 - 22			22 - 24		
SAMPLING DATE	04/26/93			05/27/93			05/27/93		
RADIOLOGICAL PARAMETERS	RESULTS	UNITS	VQ	RESULTS	UNITS	VQ	RESULTS	UNITS	VQ
CS-137	0.161	pci/g	UJ	0.290	pci/g	UJ	0.230	pci/g	UJ
GROSS ALPHA	1132.000	pci/g	J	2030.000	pci/g	J	1490.000	pci/g	J
GROSS BETA	825.000	pci/g	J	1810.000	pci/g	-	1210.000	pci/g	-
NP-237	0.118	pci/g	N	37.300	pci/g	N	1.910	pci/g	N
PU-238	0.043	pci/g	UJ	1.850	pci/g	J	0.430	pci/g	J
PU-239/240	0.030	pci/g	UJ	1.770	pci/g	J	0.380	pci/g	J
RA-226	9.740	pci/g	-	37.800	pci/g	-	42.300	pci/g	-
RA-228	1.230	pci/g	-	3.040	pci/g	-	2.290	pci/g	-
RU-106	1.300	pci/g	UJ	2.540	pci/g	UJ	1.980	pci/g	UJ
SR-90	0.192	pci/g	UJ	0.860	pci/g	J	0.150	pci/g	UJ
TC-99	0.472	pci/g	UJ	0.460	pci/g	UJ	0.390	pci/g	UJ
TH-228	1.030	pci/g	-	2.440	pci/g	-	1.380	pci/g	-
TH-230	1.110	pci/g	-	121.000	pci/g	-	74.900	pci/g	-
TH-232	1.120	pci/g	-	2.540	pci/g	-	1.770	pci/g	-
TH-TOTAL	10.300	mg/kg	-	23.100	mg/kg	-	16.100	mg/kg	-
U-234	771.000	pci/g	-	1380.000	pci/g	-	726.000	pci/g	-
U-235/236	49.100	pci/g	-	68.800	pci/g	-	35.500	pci/g	-
U-238	803.000	pci/g	-	1570.000	pci/g	-	763.000	pci/g	-
U-TOTAL	1714.000	mg/kg	-	3580.000	mg/kg	-	2280.000	mg/kg	-

TABLE E-6A
(Continued)

PHASE II - RADIOLOGICAL PARAMETERS

BORING NUMBER	11052			1994			1994		
SAMPLE NUMBER	116427			116264			116283		
	19 - 21			2 - 3.5			14 - 15.5		
SAMPLING DATE	05/25/93			05/12/93			05/12/93		
RADIOLOGICAL PARAMETERS	RESULTS	UNITS	VQ	RESULTS	UNITS	VQ	RESULTS	UNITS	VQ
CS-137	0.110	pci/g	UJ	0.950	pci/g	UJ	0.101	pci/g	UJ
GROSS ALPHA	214.000	pci/g	J	43.600	pci/g	J	36.700	pci/g	J
GROSS BETA	166.000	pci/g	J	39.400	pci/g	J	35.100	pci/g	J
NP-237	0.310	pci/g	N	0.830	pci/g	NV	0.820	pci/g	NV
PU-238	0.024	pci/g	U	0.080	pci/g	J	0.082	pci/g	UJ
PU-239/240	0.038	pci/g	J	0.024	pci/g	UJ	0.072	pci/g	UJ
RA-226	4.060	pci/g	-	2.960	pci/g	-	2.800	pci/g	-
RA-228	1.600	pci/g	-	2.970	pci/g	-	2.650	pci/g	-
RU-106	1.000	pci/g	UJ	0.826	pci/g	UJ	0.877	pci/g	UJ
SR-90	0.260	pci/g	J	0.244	pci/g	UJ	0.230	pci/g	UJ
TC-99	0.373	pci/g	UJ	0.381	pci/g	UJ	0.207	pci/g	UJ
TH-228	1.410	pci/g	-	3.080	pci/g	-	2.620	pci/g	-
TH-230	8.020	pci/g	-	2.950	pci/g	-	2.910	pci/g	-
TH-232	1.350	pci/g	-	2.650	pci/g	-	2.540	pci/g	-
TH-TOTAL	12.300	mg/kg	-	24.100	mg/kg	-	23.100	mg/kg	-
U-234	106.500	pci/g	J	3.950	pci/g	-	1.330	pci/g	-
U-235/236	5.760	pci/g	J	0.162	pci/g	J	0.037	pci/g	J
U-238	115.800	pci/g	J	3.860	pci/g	-	1.540	pci/g	-
U-TOTAL	294.000	mg/kg	-	12.800	mg/kg	-	13.300	mg/kg	-

0116

5174

TABLE E-6A
(Continued)

PHASE II - RADIOLOGICAL PARAMETERS

BORING NUMBER	1994			1994			1995		
SAMPLE NUMBER	116301			116312			116080		
	26 - 27.5			36 - 37.5			2 - 3.5		
SAMPLING DATE	05/13/93			05/13/93			05/01/93		
RADIOLOGICAL PARAMETERS	RESULTS	UNITS	VQ	RESULTS	UNITS	VQ	RESULTS	UNITS	VQ
CS-137	0.094	pci/g	UJ	0.071	pci/g	UJ	0.079	pci/g	J
GROSS ALPHA	71.400	pci/g	J	12.800	pci/g	J	159.910	pci/g	-
GROSS BETA	66.900	pci/g	J	12.900	pci/g	J	118.040	pci/g	-
NP-237	0.228	pci/g	N	0.033	pci/g	R	0.502	pci/g	N
PU-238	0.082	pci/g	J	0.122	pci/g	J	0.219	pci/g	J
PU-239/240	0.042	pci/g	UJ	0.035	pci/g	J	0.103	pci/g	J
RA-226	3.150	pci/g	-	0.560	pci/g	-	1.710	pci/g	-
RA-228	1.800	pci/g	-	0.442	pci/g	UJ	2.720	pci/g	-
RU-106	0.727	pci/g	UJ	0.654	pci/g	UJ	0.870	pci/g	UJ
SR-90	0.230	pci/g	UJ	0.208	pci/g	UJ	0.470	pci/g	J
TC-99	0.360	pci/g	UJ	0.352	pci/g	UJ	0.360	pci/g	UJ
TH-228	1.320	pci/g	-	0.308	pci/g	J	2.610	pci/g	-
TH-230	5.190	pci/g	-	0.893	pci/g	-	5.170	pci/g	-
TH-232	1.140	pci/g	-	0.264	pci/g	J	2.510	pci/g	-
TH-TOTAL	10.400	mg/kg	-	2.410	mg/kg	-	22.900	mg/kg	-
U-234	17.900	pci/g	-	0.501	pci/g	-	61.900	pci/g	-
U-235/236	1.050	pci/g	-	0.030	pci/g	J	2.910	pci/g	-
U-238	20.700	pci/g	-	0.471	pci/g	J	62.700	pci/g	-
U-TOTAL	50.700	mg/kg	-	3.440	mg/kg	J	187.000	mg/kg	-

TABLE E-6A
(Continued)

PHASE II - RADIOLOGICAL PARAMETERS

BORING NUMBER	1995			1995			1996		
SAMPLE NUMBER	116090			116172			112073		
	8 - 9			30 - 31.5			2 - 4		
SAMPLING DATE	05/01/93			05/02/93			04/29/93		
RADIOLOGICAL PARAMETERS	RESULTS	UNITS	VQ	RESULTS	UNITS	VQ	RESULTS	UNITS	VQ
CS-137	0.083	pci/g	UJ	0.085	pci/g	UJ	0.104	pci/g	J
GROSS ALPHA	41.980	pci/g	-	10.200	pci/g	-	58.630	pci/g	-
GROSS BETA	40.860	pci/g	-	15.830	pci/g	-	56.470	pci/g	-
NP-237	2.540	pci/g	NV	0.137	pci/g	N	0.490	pci/g	N
PU-238	2.260	pci/g	NV	0.031	pci/g	J	0.260	pci/g	J
PU-239/240	1.560	pci/g	NV	0.165	pci/g	J	0.130	pci/g	J
RA-226	3.180	pci/g	-	1.010	pci/g	-	2.860	pci/g	-
RA-228	2.590	pci/g	-	0.720	pci/g	-	2.340	pci/g	-
RU-106	0.660	pci/g	UJ	0.740	pci/g	UJ	0.980	pci/g	UJ
SR-90	0.500	pci/g	UJ	0.430	pci/g	UJ	0.540	pci/g	UJ
TC-99	0.360	pci/g	UJ	0.350	pci/g	UJ	0.390	pci/g	UJ
TH-228	2.260	pci/g	J	0.833	pci/g	J	2.090	pci/g	-
TH-230	4.140	pci/g	J	1.620	pci/g	J	4.070	pci/g	-
TH-232	1.940	pci/g	J	0.613	pci/g	J	1.900	pci/g	-
TH-TOTAL	17.700	mg/kg	J	5.580	mg/kg	J	17.300	mg/kg	-
U-234	2.630	pci/g	-	0.490	pci/g	J	14.550	pci/g	-
U-235/236	0.130	pci/g	J	0.052	pci/g	J	0.740	pci/g	-
U-238	2.600	pci/g	-	0.690	pci/g	-	14.560	pci/g	-
U-TOTAL	8.610	mg/kg	-	3.410	mg/kg	-	48.300	mg/kg	-

0118

- 5174

TABLE E-6A
(Continued)

PHASE II - RADIOLOGICAL PARAMETERS

BORING NUMBER	1996			1996			1996		
SAMPLE NUMBER	112077			112082			116070		
	8 - 9.5			13 - 13.5			20 - 21.5		
SAMPLING DATE	04/29/93			04/29/93			04/29/93		
RADIOLOGICAL PARAMETERS	RESULTS	UNITS	VQ	RESULTS	UNITS	VQ	RESULTS	UNITS	VQ
CS-137	0.110	pci/g	UJ	0.094	pci/g	UJ	0.075	pci/g	UJ
GROSS ALPHA	46.600	pci/g	J	27.200	pci/g	J	17.780	pci/g	-
GROSS BETA	31.000	pci/g	J	30.700	pci/g	J	12.410	pci/g	-
NP-237	0.480	pci/g	N	0.270	pci/g	N	0.086	pci/g	N
PU-238	0.200	pci/g	J	0.310	pci/g	J	0.051	pci/g	UJ
PU-239/240	0.120	pci/g	J	0.160	pci/g	J	0.070	pci/g	UJ
RA-226	2.780	pci/g	J	2.540	pci/g	J	0.870	pci/g	-
RA-228	2.360	pci/g	-	1.960	pci/g	-	0.530	pci/g	-
RU-106	0.110	pci/g	UJ	0.780	pci/g	UJ	0.670	pci/g	UJ
SR-90	0.240	pci/g	UJ	0.488	pci/g	UJ	0.400	pci/g	UJ
TC-99	0.391	pci/g	UJ	0.381	pci/g	UJ	0.370	pci/g	UJ
TH-228	2.240	pci/g	-	2.650	pci/g	-	0.410	pci/g	J
TH-230	8.800	pci/g	-	4.700	pci/g	-	2.030	pci/g	-
TH-232	1.840	pci/g	-	2.600	pci/g	-	0.290	pci/g	J
TH-TOTAL	16.700	mg/kg	-	23.700	mg/kg	-	2.610	mg/kg	-
U-234	9.480	pci/g	J	2.650	pci/g	J	0.710	pci/g	-
U-235/236	0.730	pci/g	J	0.160	pci/g	J	0.043	pci/g	J
U-238	9.900	pci/g	J	2.840	pci/g	J	0.860	pci/g	-
U-TOTAL	38.500	mg/kg	-	19.700	mg/kg	J	3.620	mg/kg	J

TABLE E-6A
(Continued)

PHASE II - RADIOLOGICAL PARAMETERS

BORING NUMBER	1997			1997			1997		
SAMPLE NUMBER	116177			116192			116243		
	0 - 1.5			10 - 11.5			28.5 - 30		
SAMPLING DATE	05/05/93			05/05/93			05/06/93		
RADIOLOGICAL PARAMETERS	RESULTS	UNITS	VQ	RESULTS	UNITS	VQ	RESULTS	UNITS	VQ
CS-137	0.550	pci/g	J	0.120	pci/g	UJ	0.080	pci/g	UJ
GROSS ALPHA	38.700	pci/g	J	42.100	pci/g	J	18.300	pci/g	J
GROSS BETA	54.400	pci/g	J	30.800	pci/g	J	32.900	pci/g	J
NP-237	0.300	pci/g	N	0.160	pci/g	N	0.180	pci/g	N
PU-238	0.060	pci/g	J	0.270	pci/g	J	0.040	pci/g	J
PU-239/240	0.090	pci/g	J	0.040	pci/g	J	0.060	pci/g	J
RA-226	1.300	pci/g	-	2.850	pci/g	-	1.260	pci/g	-
RA-228	1.290	pci/g	-	2.220	pci/g	-	0.910	pci/g	-
RU-106	0.760	pci/g	UJ	1.010	pci/g	UJ	0.830	pci/g	UJ
SR-90	0.440	pci/g	UJ	0.450	pci/g	UJ	0.370	pci/g	UJ
TC-99	0.330	pci/g	UJ	0.340	pci/g	UJ	0.330	pci/g	UJ
TH-228	1.160	pci/g	J	2.360	pci/g	J	0.630	pci/g	J
TH-230	1.890	pci/g	J	3.050	pci/g	J	1.000	pci/g	J
TH-232	1.000	pci/g	J	2.340	pci/g	J	0.850	pci/g	J
TH-TOTAL	9.200	mg/kg	J	21.300	mg/kg	J	7.760	mg/kg	J
U-234	23.400	pci/g	J	3.910	pci/g	J	0.720	pci/g	J
U-235/236	1.280	pci/g	J	0.210	pci/g	J	0.040	pci/g	J
U-238	23.700	pci/g	J	4.190	pci/g	J	0.980	pci/g	J
U-TOTAL	69.800	mg/kg	J	10.900	mg/kg	J	5.620	mg/kg	J

0120

5174

TABLE E-6A
(Continued)

PHASE II - RADIOLOGICAL PARAMETERS

BORING NUMBER	1997			1997			1998		
SAMPLE NUMBER	116252			116257			112045		
	34 - 35.5			38 - 39			2 - 3.5		
SAMPLING DATE	05/07/93			05/07/93			04/28/93		
RADIOLOGICAL PARAMETERS	RESULTS	UNITS	VQ	RESULTS	UNITS	VQ	RESULTS	UNITS	VQ
CS-137	0.070	pci/g	UJ	0.080	pci/g	UJ	0.090	pci/g	UJ
GROSS ALPHA	9.630	pci/g	J	9.890	pci/g	J	40.000	pci/g	-
GROSS BETA	22.700	pci/g	J	14.500	pci/g	J	35.100	pci/g	-
NP-237	0.260	pci/g	N	0.180	pci/g	N	0.113	pci/g	N
PU-238	0.040	pci/g	J	0.040	pci/g	J	0.115	pci/g	J
PU-239/240	0.050	pci/g	J	0.040	pci/g	J	0.069	pci/g	J
RA-226	1.220	pci/g	-	0.780	pci/g	-	3.440	pci/g	-
RA-228	0.990	pci/g	-	0.340	pci/g	J	2.510	pci/g	-
RU-106	0.750	pci/g	UJ	0.840	pci/g	UJ	0.710	pci/g	UJ
SR-90	0.510	pci/g	UJ	0.290	pci/g	UJ	0.340	pci/g	UJ
TC-99	0.370	pci/g	UJ	0.380	pci/g	UJ	0.360	pci/g	UJ
TH-228	0.740	pci/g	-	0.400	pci/g	J	2.820	pci/g	R
TH-230	1.140	pci/g	-	1.080	pci/g	-	6.160	pci/g	R
TH-232	0.870	pci/g	-	0.360	pci/g	J	2.670	pci/g	R
TH-TOTAL	7.950	mg/kg	-	3.280	mg/kg	J	24.400	mg/kg	R
U-234	0.800	pci/g	-	1.290	pci/g	-	4.230	pci/g	-
U-235/236	0.040	pci/g	J	0.080	pci/g	J	0.190	pci/g	J
U-238	0.910	pci/g	-	1.440	pci/g	-	4.460	pci/g	-
U-TOTAL	2.620	mg/kg	J	5.860	mg/kg	-	14.300	mg/kg	-

TABLE E-6A
(Continued)

PHASE II - RADIOLOGICAL PARAMETERS

BORING NUMBER	1998			1998			1998		
SAMPLE NUMBER	112054			112057			112065		
	8 - 9.5			10 - 11.5			17 - 18.5		
SAMPLING DATE	04/28/93			04/28/93			04/28/93		
RADIOLOGICAL PARAMETERS	RESULTS	UNITS	VQ	RESULTS	UNITS	VQ	RESULTS	UNITS	VQ
CS-137	0.088	pci/g	J	0.105	pci/g	J	0.085	pci/g	UJ
GROSS ALPHA	19.110	pci/g	-	38.340	pci/g	-	7.810	pci/g	-
GROSS BETA	35.780	pci/g	-	33.670	pci/g	-	19.400	pci/g	-
NP-237	0.165	pci/g	N	0.490	pci/g	N	0.160	pci/g	N
PU-238	0.039	pci/g	UJ	0.133	pci/g	J	0.066	pci/g	J
PU-239/240	0.039	pci/g	UJ	0.100	pci/g	J	0.041	pci/g	UJ
RA-226	1.460	pci/g	-	2.070	pci/g	-	0.790	pci/g	-
RA-228	1.180	pci/g	-	1.590	pci/g	-	0.730	pci/g	-
RU-106	0.740	pci/g	UJ	0.820	pci/g	UJ	0.740	pci/g	UJ
SR-90	0.470	pci/g	UJ	0.480	pci/g	UJ	0.470	pci/g	UJ
TC-99	0.360	pci/g	UJ	0.360	pci/g	UJ	0.340	pci/g	UJ
TH-228	1.170	pci/g	-	1.300	pci/g	-	0.535	pci/g	J
TH-230	2.800	pci/g	-	4.170	pci/g	-	0.874	pci/g	J
TH-232	0.979	pci/g	-	1.350	pci/g	-	0.732	pci/g	J
TH-TOTAL	8.920	mg/kg	-	12.300	mg/kg	-	6.670	mg/kg	J
U-234	4.140	pci/g	-	8.600	pci/g	-	0.770	pci/g	-
U-235/236	0.210	pci/g	J	0.400	pci/g	J	0.039	pci/g	J
U-238	4.780	pci/g	-	9.220	pci/g	-	0.850	pci/g	-
U-TOTAL	14.900	mg/kg	-	31.700	mg/kg	-	4.390	mg/kg	-

0122

5174

TABLE E-6A
(Continued)

PHASE II - CHEMICAL PARAMETERS

BORING NUMBER	11006			11055			11054		
SAMPLE NUMBER	113492			116331			116340		
	22.5-24			16-18			16-17		
SAMPLING DATE	04/26/93			05/19/93			05/21/93		
CHEMICAL PARAMETERS	RESULTS	UNITS	L VQ	RESULTS	UNITS	L VQ	RESULTS	UNITS	L VQ
Inorganics									
Aluminum	9630.000	mg/kg	C J	NA			NA		
Antimony	1.300	mg/kg	C UJ	NA			NA		
Arsenic	6.700	mg/kg	C -	NA			NA		
Barium	132.000	mg/kg	C -	NA			NA		
Beryllium	0.530	mg/kg	C U	NA			NA		
Cadmium	1.300	mg/kg	C U	NA			NA		
Calcium	74100.000	mg/kg	C J	NA			NA		
Chromium	34.800	mg/kg	C J	NA			NA		
Cobalt	8.700	mg/kg	C -	NA			NA		
Copper	249.000	mg/kg	C J	NA			NA		
Cyanide	0.130	mg/kg	C UJ	NA			NA		
Iron	19600.000	mg/kg	C J	NA			NA		
Lead	96.600	mg/kg	C J	NA			NA		
Magnesium	24300.000	mg/kg	C J	NA			NA		
Manganese	576.000	mg/kg	C -	NA			NA		
Mercury	0.440	mg/kg	C -	NA			NA		
Molybdenum	8.700	mg/kg	C -	NA			NA		
Nickel	82.300	mg/kg	C J	NA			NA		
Potassium	2900.000	mg/kg	C -	NA			NA		
Selenium	0.530	mg/kg	C U	NA			NA		
Silicon	860.000	mg/kg	C J	NA			NA		
Silver	8.100	mg/kg	C -	NA			NA		
Sodium	486.000	mg/kg	C -	NA			NA		
Thallium	0.530	mg/kg	C U	NA			NA		
Vanadium	19.500	mg/kg	C -	NA			NA		
Zinc	383.000	mg/kg	C J	NA			NA		
Volatile Organics									
1,1,1-Trichloroethane	NA			8.000	ug/kg	C J	10.000	ug/kg	C U
1,1,2,2-Tetrachloroethane	NA			14.000	ug/kg	C UJ	10.000	ug/kg	C U
1,1,2-Trichloroethane	NA			14.000	ug/kg	C UJ	10.000	ug/kg	C U
1,1-Dichloroethane	NA			14.000	ug/kg	C UJ	10.000	ug/kg	C U
1,1-Dichloroethene	NA			14.000	ug/kg	C UJ	10.000	ug/kg	C U
1,2-Dichloroethane	NA			14.000	ug/kg	C UJ	10.000	ug/kg	C U
1,2-Dichloroethene	NA			14.000	ug/kg	C UJ	10.000	ug/kg	C U
1,2-Dichloropropane	NA			14.000	ug/kg	C UJ	10.000	ug/kg	C U
2-Butanone	NA			14.000	ug/kg	C UJ	10.000	ug/kg	C U
2-Hexanone	NA			14.000	ug/kg	C UJ	10.000	ug/kg	C U
4-Methyl-2-pentanone	NA			14.000	ug/kg	C UJ	10.000	ug/kg	C U
Acetone	NA			23.000	ug/kg	C J	10.000	ug/kg	C U
Benzene	NA			14.000	ug/kg	C UJ	10.000	ug/kg	C U

TABLE E-6A
(Continued)

PHASE II - CHEMICAL PARAMETERS

BORING NUMBER	11006					11055					11054				
SAMPLE NUMBER	113492					116331					116340				
	22.5-24					16-18					16-17				
SAMPLING DATE	04/26/93					05/19/93					05/21/93				
CHEMICAL PARAMETERS	RESULTS	UNITS	L	VQ		RESULTS	UNITS	L	VQ		RESULTS	UNITS	L	VQ	
Volatile Organics															
Bromodichloromethane	NA					14.000	ug/kg	C	UJ		10.000	ug/kg	C	U	
Bromoform	NA					14.000	ug/kg	C	UJ		10.000	ug/kg	C	U	
Bromomethane	NA					14.000	ug/kg	C	UJ		10.000	ug/kg	C	U	
Carbon Tetrachloride	NA					14.000	ug/kg	C	UJ		10.000	ug/kg	C	U	
Carbon disulfide	NA					14.000	ug/kg	C	UJ		10.000	ug/kg	C	U	
Chlorobenzene	NA					14.000	ug/kg	C	UJ		10.000	ug/kg	C	U	
Chloroethane	NA					14.000	ug/kg	C	UJ		10.000	ug/kg	C	U	
Chloroform	NA					14.000	ug/kg	C	UJ		10.000	ug/kg	C	U	
Chloromethane	NA					14.000	ug/kg	C	UJ		10.000	ug/kg	C	U	
Dibromochloromethane	NA					14.000	ug/kg	C	UJ		10.000	ug/kg	C	U	
Ethylbenzene	NA					14.000	ug/kg	C	UJ		10.000	ug/kg	C	U	
Methylene chloride	NA					14.000	ug/kg	C	UJ		10.000	ug/kg	C	U	
Styrene	NA					14.000	ug/kg	C	UJ		10.000	ug/kg	C	U	
Tetrachloroethene	NA					1.000	ug/kg	C	J		10.000	ug/kg	C	U	
Toluene	NA					3500.000	ug/kg	C	R		2.000	ug/kg	C	J	
Trichloroethene	NA					14.000	ug/kg	C	UJ		10.000	ug/kg	C	U	
Vinyl Acetate	NA					14.000	ug/kg	C	UJ		10.000	ug/kg	C	U	
Vinyl chloride	NA					14.000	ug/kg	C	UJ		10.000	ug/kg	C	U	
Xylenes, Total	NA					14.000	ug/kg	C	UJ		10.000	ug/kg	C	U	
cis-1,3-Dichloropropene	NA					14.000	ug/kg	C	UJ		10.000	ug/kg	C	U	
trans-1,3-Dichloropropene	NA					14.000	ug/kg	C	UJ		10.000	ug/kg	C	U	
Semivolatile Organics															
1,2,4-Trichlorobenzene	430.000	ug/kg	C	UJ		460.000	ug/kg	C	U		350.000	ug/kg	C	U	
1,2-Dichlorobenzene	430.000	ug/kg	C	UJ		460.000	ug/kg	C	U		350.000	ug/kg	C	U	
1,3-Dichlorobenzene	430.000	ug/kg	C	UJ		460.000	ug/kg	C	U		350.000	ug/kg	C	U	
1,4-Dichlorobenzene	430.000	ug/kg	C	UJ		460.000	ug/kg	C	U		350.000	ug/kg	C	U	
2,4,5-Trichlorophenol	1100.000	ug/kg	C	UJ		1100.000	ug/kg	C	U		840.000	ug/kg	C	U	
2,4,6-Trichlorophenol	430.000	ug/kg	C	UJ		460.000	ug/kg	C	U		350.000	ug/kg	C	U	
2,4-Dichlorophenol	430.000	ug/kg	C	UJ		460.000	ug/kg	C	U		350.000	ug/kg	C	U	
2,4-Dimethylphenol	430.000	ug/kg	C	UJ		460.000	ug/kg	C	U		350.000	ug/kg	C	U	
2,4-Dinitrophenol	1100.000	ug/kg	C	UJ		1100.000	ug/kg	C	UJ		840.000	ug/kg	C	UJ	
2,4-Dinitrotoluene	430.000	ug/kg	C	UJ		460.000	ug/kg	C	U		350.000	ug/kg	C	U	
2,6-Dinitrotoluene	430.000	ug/kg	C	UJ		460.000	ug/kg	C	U		350.000	ug/kg	C	U	
2-Benzyl-4-chlorophenol	430.000	ug/kg	C	UJ		NA					NA				
2-Chloronaphthalene	430.000	ug/kg	C	UJ		460.000	ug/kg	C	U		350.000	ug/kg	C	U	
2-Chlorophenol	430.000	ug/kg	C	UJ		460.000	ug/kg	C	U		350.000	ug/kg	C	U	
2-Methylnaphthalene	430.000	ug/kg	C	UJ		460.000	ug/kg	C	U		350.000	ug/kg	C	U	
2-Methylphenol	430.000	ug/kg	C	UJ		460.000	ug/kg	C	U		350.000	ug/kg	C	U	
2-Nitroaniline	1100.000	ug/kg	C	UJ		1100.000	ug/kg	C	U		840.000	ug/kg	C	U	
2-Nitrophenol	430.000	ug/kg	C	UJ		460.000	ug/kg	C	U		350.000	ug/kg	C	U	

0124

5174

TABLE E-6A
(Continued)

PHASE II - CHEMICAL PARAMETERS

BORING NUMBER	11006			11055			11054		
SAMPLE NUMBER	113492			116331			116340		
	22.5-24			16-18			16-17		
SAMPLING DATE	04/26/93			05/19/93			05/21/93		
CHEMICAL PARAMETERS	RESULTS	UNITS	L VQ	RESULTS	UNITS	L VQ	RESULTS	UNITS	L VQ
Semivolatile Organics									
3,3'-Dichlorobenzidine	430.000	ug/kg	C UJ	460.000	ug/kg	C U	350.000	ug/kg	C UJ
3-Nitroaniline	1100.000	ug/kg	C UJ	1100.000	ug/kg	C U	840.000	ug/kg	C R
4,6-Dinitro-2-methylphenol	1100.000	ug/kg	C UJ	1100.000	ug/kg	C U	840.000	ug/kg	C U
4-Bromophenyl phenyl ether	430.000	ug/kg	C UJ	460.000	ug/kg	C U	350.000	ug/kg	C U
4-Chloro-3-methylphenol	430.000	ug/kg	C UJ	460.000	ug/kg	C U	350.000	ug/kg	C U
4-Chlorophenylphenyl ether	430.000	ug/kg	C UJ	460.000	ug/kg	C U	350.000	ug/kg	C U
4-Methylphenol	10.000	ug/kg	C J	460.000	ug/kg	C U	350.000	ug/kg	C U
4-Nitroaniline	1100.000	ug/kg	C UJ	1100.000	ug/kg	C U	840.000	ug/kg	C UJ
4-Nitrophenol	1100.000	ug/kg	C UJ	1100.000	ug/kg	C U	840.000	ug/kg	C U
Acenaphthene	430.000	ug/kg	C UJ	460.000	ug/kg	C U	350.000	ug/kg	C U
Acenaphthylene	430.000	ug/kg	C UJ	460.000	ug/kg	C U	350.000	ug/kg	C U
Anthracene	3.000	ug/kg	C J	460.000	ug/kg	C U	350.000	ug/kg	C U
Benzo(a)anthracene	8.000	ug/kg	C J	460.000	ug/kg	C U	350.000	ug/kg	C U
Benzo(a)pyrene	7.000	ug/kg	C J	460.000	ug/kg	C U	350.000	ug/kg	C U
Benzo(b)fluoranthene	5.000	ug/kg	C J	460.000	ug/kg	C U	350.000	ug/kg	C U
Benzo(g,h,i)perylene	4.000	ug/kg	C J	460.000	ug/kg	C U	350.000	ug/kg	C U
Benzo(k)fluoranthene	6.000	ug/kg	C J	460.000	ug/kg	C U	350.000	ug/kg	C U
Benzoic acid	2100.000	ug/kg	C UJ	NA			NA		
Benzyl alcohol	430.000	ug/kg	C UJ	NA			NA		
Butyl benzyl phthalate	430.000	ug/kg	C UJ	460.000	ug/kg	C U	350.000	ug/kg	C U
Carbazole	1.000	ug/kg	C J	460.000	ug/kg	C U	350.000	ug/kg	C U
Chrysene	8.000	ug/kg	C J	460.000	ug/kg	C U	350.000	ug/kg	C U
Di-n-butyl phthalate	430.000	ug/kg	C UJ	59.000	ug/kg	C J	350.000	ug/kg	C U
Di-n-octyl phthalate	430.000	ug/kg	C UJ	460.000	ug/kg	C U	350.000	ug/kg	C U
Dibenzo(a,h)anthracene	2.000	ug/kg	C J	460.000	ug/kg	C U	350.000	ug/kg	C U
Dibenzofuran	430.000	ug/kg	C UJ	460.000	ug/kg	C U	350.000	ug/kg	C U
Diethyl phthalate	430.000	ug/kg	C UJ	460.000	ug/kg	C U	350.000	ug/kg	C U
Dimethyl phthalate	430.000	ug/kg	C UJ	460.000	ug/kg	C U	350.000	ug/kg	C U
Fluoranthene	16.000	ug/kg	C J	460.000	ug/kg	C U	350.000	ug/kg	C U
Fluorene	430.000	ug/kg	C UJ	460.000	ug/kg	C U	350.000	ug/kg	C U
Hexachlorobenzene	430.000	ug/kg	C UJ	460.000	ug/kg	C U	350.000	ug/kg	C U
Hexachlorobutadiene	430.000	ug/kg	C UJ	460.000	ug/kg	C U	350.000	ug/kg	C U
Hexachlorocyclopentadiene	430.000	ug/kg	C UJ	460.000	ug/kg	C UJ	350.000	ug/kg	C U
Hexachloroethane	430.000	ug/kg	C UJ	460.000	ug/kg	C U	350.000	ug/kg	C U
Indeno(1,2,3-cd)pyrene	4.000	ug/kg	C J	460.000	ug/kg	C U	350.000	ug/kg	C U
Isophorone	4.000	ug/kg	C J	460.000	ug/kg	C U	350.000	ug/kg	C U
N-Nitroso-di-n-propylamine	430.000	ug/kg	C UJ	460.000	ug/kg	C U	350.000	ug/kg	C U
N-Nitrosodimethylamine	430.000	ug/kg	C UJ	NA			NA		
N-Nitrosodiphenylamine	430.000	ug/kg	C UJ	460.000	ug/kg	C U	350.000	ug/kg	C U
Naphthalene	430.000	ug/kg	C UJ	460.000	ug/kg	C U	350.000	ug/kg	C U
Nitrobenzene	430.000	ug/kg	C UJ	460.000	ug/kg	C U	350.000	ug/kg	C U
Pentachlorophenol	1100.000	ug/kg	C UJ	1100.000	ug/kg	C U	840.000	ug/kg	C U

TABLE E-6A
(Continued)

PHASE II - CHEMICAL PARAMETERS

BORING NUMBER	11006			11055			11054		
SAMPLE NUMBER	113492			116331			116340		
	22.5-24			16-18			16-17		
SAMPLING DATE	04/26/93			05/19/93			05/21/93		
CHEMICAL PARAMETERS	RESULTS	UNITS	L VQ	RESULTS	UNITS	L VQ	RESULTS	UNITS	L VQ
Semivolatile Organics									
Phenanthrene	10.000	ug/kg	C J	460.000	ug/kg	C U	350.000	ug/kg	C U
Phenol	2.000	ug/kg	C J	460.000	ug/kg	C U	350.000	ug/kg	C U
Pyrene	14.000	ug/kg	C J	460.000	ug/kg	C U	350.000	ug/kg	C U
Tributyl phosphate	2.000	ug/kg	C J	NA			NA		
bis(2-Chloroethoxy)methane	430.000	ug/kg	C UJ	460.000	ug/kg	C U	350.000	ug/kg	C U
bis(2-Chloroethyl)ether	430.000	ug/kg	C UJ	460.000	ug/kg	C U	350.000	ug/kg	C U
bis(2-Chloroisopropyl) ether	430.000	ug/kg	C UJ	460.000	ug/kg	C U	350.000	ug/kg	C U
bis(2-Ethylhexyl) phthalate	2.000	ug/kg	C J	48.000	ug/kg	C J	54.000	ug/kg	C J
p-Chloroaniline	430.000	ug/kg	C UJ	460.000	ug/kg	C U	350.000	ug/kg	C UJ
Pesticide Organics/PCBs									
4,4'-DDD	4.300	ug/kg	C UJ	4.600	ug/kg	C U	3.400	ug/kg	C U
4,4'-DDE	4.300	ug/kg	C UJ	4.600	ug/kg	C U	3.400	ug/kg	C U
4,4'-DDT	4.300	ug/kg	C UJ	4.600	ug/kg	C U	3.400	ug/kg	C U
Aldrin	2.200	ug/kg	C UJ	2.400	ug/kg	C U	1.800	ug/kg	C U
Aroclor-1016	43.000	ug/kg	C UJ	46.000	ug/kg	C U	34.000	ug/kg	C U
Aroclor-1221	88.000	ug/kg	C UJ	94.000	ug/kg	C U	70.000	ug/kg	C U
Aroclor-1232	43.000	ug/kg	C UJ	46.000	ug/kg	C U	34.000	ug/kg	C U
Aroclor-1242	43.000	ug/kg	C UJ	46.000	ug/kg	C U	34.000	ug/kg	C U
Aroclor-1248	43.000	ug/kg	C UJ	46.000	ug/kg	C U	34.000	ug/kg	C U
Aroclor-1254	570.000	ug/kg	C J	46.000	ug/kg	C U	34.000	ug/kg	C U
Aroclor-1260	43.000	ug/kg	C UJ	46.000	ug/kg	C U	34.000	ug/kg	C U
Dieldrin	4.300	ug/kg	C UJ	4.600	ug/kg	C U	3.400	ug/kg	C U
Endosulfan II	4.300	ug/kg	C UJ	4.600	ug/kg	C U	3.400	ug/kg	C U
Endosulfan sulfate	4.300	ug/kg	C UJ	4.600	ug/kg	C U	3.400	ug/kg	C U
Endosulfan-I	2.200	ug/kg	C UJ	2.400	ug/kg	C U	1.800	ug/kg	C U
Endrin	4.300	ug/kg	C UJ	4.600	ug/kg	C U	3.400	ug/kg	C U
Endrin aldehyde	4.300	ug/kg	C UJ	4.600	ug/kg	C U	3.400	ug/kg	C U
Endrin ketone	4.300	ug/kg	C UJ	4.600	ug/kg	C U	3.400	ug/kg	C U
Heptachlor	2.200	ug/kg	C UJ	2.400	ug/kg	C U	1.800	ug/kg	C U
Heptachlor epoxide	2.200	ug/kg	C UJ	2.400	ug/kg	C U	1.800	ug/kg	C U
Methoxychlor	22.000	ug/kg	C UJ	24.000	ug/kg	C U	18.000	ug/kg	C U
Toxaphene	220.000	ug/kg	C UJ	240.000	ug/kg	C U	180.000	ug/kg	C U
alpha-BHC	2.200	ug/kg	C UJ	2.400	ug/kg	C U	1.800	ug/kg	C U
alpha-Chlordane	2.200	ug/kg	C UJ	2.400	ug/kg	C U	1.800	ug/kg	C U
beta-BHC	2.200	ug/kg	C UJ	2.400	ug/kg	C U	1.800	ug/kg	C U
delta-BHC	2.200	ug/kg	C UJ	2.400	ug/kg	C U	1.800	ug/kg	C U
gamma-BHC (Lindane)	2.200	ug/kg	C UJ	2.400	ug/kg	C U	1.800	ug/kg	C U
gamma-Chlordane	2.200	ug/kg	C UJ	2.400	ug/kg	C U	1.800	ug/kg	C U

0126

5174

TABLE E-6A
(Continued)

PHASE II - CHEMICAL PARAMETERS

BORING NUMBER	11056			11057			11052		
SAMPLE NUMBER	116335			116337			116427		
	17-18			17-18			19-21		
SAMPLING DATE	05/20/93			05/20/93			05/25/93		
CHEMICAL PARAMETERS	RESULTS	UNITS	L VQ	RESULTS	UNITS	L VQ	RESULTS	UNITS	L VQ
Inorganics									
Aluminum	NA			NA			13900.000	mg/kg	C -
Antimony	NA			NA			2.100	mg/kg	C J
Arsenic	NA			NA			35.500	mg/kg	C -
Barium	NA			NA			222.000	mg/kg	C -
Beryllium	NA			NA			1.600	mg/kg	C -
Cadmium	NA			NA			1.300	mg/kg	C U
Calcium	NA			NA			31400.000	mg/kg	C -
Chromium	NA			NA			22.000	mg/kg	C -
Cobalt	NA			NA			14.600	mg/kg	C -
Copper	NA			NA			92.300	mg/kg	C -
Cyanide	NA			NA			0.130	mg/kg	C U
Iron	NA			NA			20100.000	mg/kg	C -
Lead	NA			NA			193.000	mg/kg	C -
Magnesium	NA			NA			9120.000	mg/kg	C -
Manganese	NA			NA			432.000	mg/kg	C -
Mercury	NA			NA			0.460	mg/kg	C -
Molybdenum	NA			NA			7.400	mg/kg	C -
Nickel	NA			NA			54.400	mg/kg	C -
Potassium	NA			NA			2050.000	mg/kg	C -
Selenium	NA			NA			1.800	mg/kg	C -
Silicon	NA			NA			1090.000	mg/kg	C -
Silver	NA			NA			7.900	mg/kg	C -
Sodium	NA			NA			225.000	mg/kg	C -
Thallium	NA			NA			0.530	mg/kg	C U
Vanadium	NA			NA			41.300	mg/kg	C -
Zinc	NA			NA			324.000	mg/kg	C -
Volatile Organics									
1,1,1-Trichloroethane	12.000	ug/kg	C J	10.000	ug/kg	C U	14.000	ug/kg	C U
1,1,2,2-Tetrachloroethane	17.000	ug/kg	C R	10.000	ug/kg	C U	14.000	ug/kg	C U
1,1,2-Trichloroethane	17.000	ug/kg	C UJ	10.000	ug/kg	C U	14.000	ug/kg	C U
1,1-Dichloroethane	17.000	ug/kg	C U	10.000	ug/kg	C UJ	14.000	ug/kg	C U
1,1-Dichloroethene	17.000	ug/kg	C U	10.000	ug/kg	C U	14.000	ug/kg	C U
1,2-Dichloroethane	17.000	ug/kg	C U	10.000	ug/kg	C U	14.000	ug/kg	C U
1,2-Dichloroethene	17.000	ug/kg	C U	10.000	ug/kg	C U	14.000	ug/kg	C U
1,2-Dichloropropane	17.000	ug/kg	C UJ	10.000	ug/kg	C U	14.000	ug/kg	C U
2-Butanone	17.000	ug/kg	C U	10.000	ug/kg	C UJ	14.000	ug/kg	C U
2-Hexanone	17.000	ug/kg	C UJ	10.000	ug/kg	C U	14.000	ug/kg	C U
4-Methyl-2-pentanone	17.000	ug/kg	C UJ	10.000	ug/kg	C U	14.000	ug/kg	C U
Acetone	17.000	ug/kg	C U	10.000	ug/kg	C U	6.000	ug/kg	C J
Benzene	17.000	ug/kg	C UJ	10.000	ug/kg	C U	14.000	ug/kg	C U

TABLE E-6A
(Continued)

PHASE II - CHEMICAL PARAMETERS

BORING NUMBER	11056			11057			11052		
SAMPLE NUMBER	116335			116337			116427		
	17-18			17-18			19-21		
SAMPLING DATE	05/20/93			05/20/93			05/25/93		
CHEMICAL PARAMETERS	RESULTS	UNITS	L VQ	RESULTS	UNITS	L VQ	RESULTS	UNITS	L VQ
Volatile Organics									
Bromodichloromethane	17.000	ug/kg	C UJ	10.000	ug/kg	C U	14.000	ug/kg	C U
Bromoform	17.000	ug/kg	C UJ	10.000	ug/kg	C U	14.000	ug/kg	C U
Bromomethane	17.000	ug/kg	C U	10.000	ug/kg	C U	14.000	ug/kg	C U
Carbon Tetrachloride	17.000	ug/kg	C UJ	10.000	ug/kg	C U	14.000	ug/kg	C U
Carbon disulfide	17.000	ug/kg	C U	10.000	ug/kg	C U	14.000	ug/kg	C U
Chlorobenzene	17.000	ug/kg	C R	10.000	ug/kg	C U	14.000	ug/kg	C U
Chloroethane	17.000	ug/kg	C U	10.000	ug/kg	C UJ	14.000	ug/kg	C U
Chloroform	17.000	ug/kg	C U	10.000	ug/kg	C U	14.000	ug/kg	C U
Chloromethane	17.000	ug/kg	C U	10.000	ug/kg	C UJ	14.000	ug/kg	C UJ
Dibromochloromethane	17.000	ug/kg	C UJ	10.000	ug/kg	C U	14.000	ug/kg	C U
Ethylbenzene	17.000	ug/kg	C R	10.000	ug/kg	C U	14.000	ug/kg	C U
Methylene chloride	30.000	ug/kg	C U	10.000	ug/kg	C U	14.000	ug/kg	C U
Styrene	17.000	ug/kg	C R	10.000	ug/kg	C U	14.000	ug/kg	C U
Tetrachloroethene	17.000	ug/kg	C R	10.000	ug/kg	C U	14.000	ug/kg	C U
Toluene	23.000	ug/kg	C J	1.000	ug/kg	C J	14.000	ug/kg	C U
Trichloroethene	17.000	ug/kg	C UJ	10.000	ug/kg	C U	14.000	ug/kg	C U
Vinyl Acetate	17.000	ug/kg	C UJ	10.000	ug/kg	C U	14.000	ug/kg	C U
Vinyl chloride	17.000	ug/kg	C U	10.000	ug/kg	C U	14.000	ug/kg	C U
Xylenes, Total	17.000	ug/kg	C R	10.000	ug/kg	C U	14.000	ug/kg	C U
cis-1,3-Dichloropropene	17.000	ug/kg	C UJ	10.000	ug/kg	C U	14.000	ug/kg	C U
trans-1,3-Dichloropropene	17.000	ug/kg	C UJ	10.000	ug/kg	C U	14.000	ug/kg	C U
Semivolatile Organics									
1,2,4-Trichlorobenzene	570.000	ug/kg	C U	340.000	ug/kg	C U	440.000	ug/kg	C U
1,2-Dichlorobenzene	570.000	ug/kg	C U	340.000	ug/kg	C U	440.000	ug/kg	C U
1,3-Dichlorobenzene	570.000	ug/kg	C U	340.000	ug/kg	C U	440.000	ug/kg	C U
1,4-Dichlorobenzene	570.000	ug/kg	C U	340.000	ug/kg	C U	440.000	ug/kg	C U
2,4,5-Trichlorophenol	1400.000	ug/kg	C U	830.000	ug/kg	C U	1100.000	ug/kg	C U
2,4,6-Trichlorophenol	570.000	ug/kg	C U	340.000	ug/kg	C U	440.000	ug/kg	C U
2,4-Dichlorophenol	570.000	ug/kg	C U	340.000	ug/kg	C U	440.000	ug/kg	C U
2,4-Dimethylphenol	570.000	ug/kg	C U	340.000	ug/kg	C U	440.000	ug/kg	C U
2,4-Dinitrophenol	1400.000	ug/kg	C UJ	830.000	ug/kg	C UJ	1100.000	ug/kg	C UJ
2,4-Dinitrotoluene	570.000	ug/kg	C U	340.000	ug/kg	C U	440.000	ug/kg	C U
2,6-Dinitrotoluene	570.000	ug/kg	C U	340.000	ug/kg	C U	440.000	ug/kg	C U
2-Benzyl-4-chlorophenol	NA			NA			440.000	ug/kg	C U
2-Chloronaphthalene	570.000	ug/kg	C U	340.000	ug/kg	C U	440.000	ug/kg	C U
2-Chlorophenol	570.000	ug/kg	C U	340.000	ug/kg	C U	440.000	ug/kg	C U
2-Methylnaphthalene	570.000	ug/kg	C U	340.000	ug/kg	C U	440.000	ug/kg	C U
2-Methylphenol	570.000	ug/kg	C U	340.000	ug/kg	C U	440.000	ug/kg	C U
2-Nitroaniline	1400.000	ug/kg	C U	830.000	ug/kg	C U	1100.000	ug/kg	C U
2-Nitrophenol	570.000	ug/kg	C U	340.000	ug/kg	C U	440.000	ug/kg	C U

0128

- 5174

TABLE E-6A
(Continued)

PHASE II - CHEMICAL PARAMETERS

BORING NUMBER	11056			11057			11052		
SAMPLE NUMBER	116335			116337			116427		
	17-18			17-18			19-21		
SAMPLING DATE	05/20/93			05/20/93			05/25/93		
CHEMICAL PARAMETERS	RESULTS	UNITS	L VQ	RESULTS	UNITS	L VQ	RESULTS	UNITS	L VQ
Semivolatile Organics									
3,3'-Dichlorobenzidine	570.000	ug/kg	C UJ	340.000	ug/kg	C UJ	440.000	ug/kg	C U
3-Nitroaniline	1400.000	ug/kg	C R	830.000	ug/kg	C R	1100.000	ug/kg	C U
4,6-Dinitro-2-methylphenol	1400.000	ug/kg	C U	830.000	ug/kg	C U	1100.000	ug/kg	C U
4-Bromophenyl phenyl ether	570.000	ug/kg	C U	340.000	ug/kg	C U	440.000	ug/kg	C U
4-Chloro-3-methylphenol	570.000	ug/kg	C U	340.000	ug/kg	C U	440.000	ug/kg	C U
4-Chlorophenylphenyl ether	570.000	ug/kg	C U	340.000	ug/kg	C U	440.000	ug/kg	C U
4-Methylphenol	570.000	ug/kg	C U	340.000	ug/kg	C U	440.000	ug/kg	C U
4-Nitroaniline	1400.000	ug/kg	C UJ	830.000	ug/kg	C UJ	1100.000	ug/kg	C U
4-Nitrophenol	1400.000	ug/kg	C U	830.000	ug/kg	C U	1100.000	ug/kg	C U
Acenaphthene	570.000	ug/kg	C U	340.000	ug/kg	C U	440.000	ug/kg	C U
Acenaphthylene	570.000	ug/kg	C U	340.000	ug/kg	C U	440.000	ug/kg	C U
Anthracene	570.000	ug/kg	C U	340.000	ug/kg	C U	440.000	ug/kg	C U
Benzo(a)anthracene	570.000	ug/kg	C U	340.000	ug/kg	C U	440.000	ug/kg	C U
Benzo(a)pyrene	570.000	ug/kg	C U	340.000	ug/kg	C U	440.000	ug/kg	C U
Benzo(b)fluoranthene	570.000	ug/kg	C U	340.000	ug/kg	C U	440.000	ug/kg	C U
Benzo(g,h,i)perylene	570.000	ug/kg	C U	340.000	ug/kg	C U	440.000	ug/kg	C U
Benzo(k)fluoranthene	570.000	ug/kg	C U	340.000	ug/kg	C U	440.000	ug/kg	C U
Benzoic acid	NA			NA			2100.000	ug/kg	C UJ
Benzyl alcohol	NA			NA			440.000	ug/kg	C R
Butyl benzyl phthalate	570.000	ug/kg	C U	340.000	ug/kg	C U	440.000	ug/kg	C U
Carbazole	570.000	ug/kg	C U	340.000	ug/kg	C U	440.000	ug/kg	C U
Chrysene	570.000	ug/kg	C U	340.000	ug/kg	C U	440.000	ug/kg	C U
Di-n-butyl phthalate	570.000	ug/kg	C U	340.000	ug/kg	C U	440.000	ug/kg	C U
Di-n-octyl phthalate	570.000	ug/kg	C U	340.000	ug/kg	C U	440.000	ug/kg	C U
Dibenzo(a,h)anthracene	570.000	ug/kg	C U	340.000	ug/kg	C U	440.000	ug/kg	C U
Dibenzofuran	570.000	ug/kg	C U	340.000	ug/kg	C U	440.000	ug/kg	C U
Diethyl phthalate	570.000	ug/kg	C U	340.000	ug/kg	C U	440.000	ug/kg	C U
Dimethyl phthalate	570.000	ug/kg	C U	340.000	ug/kg	C U	440.000	ug/kg	C U
Fluoranthene	570.000	ug/kg	C U	340.000	ug/kg	C U	440.000	ug/kg	C U
Fluorene	570.000	ug/kg	C U	340.000	ug/kg	C U	440.000	ug/kg	C U
Hexachlorobenzene	570.000	ug/kg	C U	340.000	ug/kg	C U	440.000	ug/kg	C U
Hexachlorobutadiene	570.000	ug/kg	C U	340.000	ug/kg	C U	440.000	ug/kg	C U
Hexachlorocyclopentadiene	570.000	ug/kg	C U	340.000	ug/kg	C U	440.000	ug/kg	C U
Hexachloroethane	570.000	ug/kg	C U	340.000	ug/kg	C U	440.000	ug/kg	C U
Indeno(1,2,3-cd)pyrene	570.000	ug/kg	C U	340.000	ug/kg	C U	440.000	ug/kg	C U
Isophorone	570.000	ug/kg	C U	340.000	ug/kg	C U	440.000	ug/kg	C U
N-Nitroso-di-n-propylamine	570.000	ug/kg	C U	340.000	ug/kg	C U	440.000	ug/kg	C U
N-Nitrosodimethylamine	NA			NA			440.000	ug/kg	C U
N-Nitrosodiphenylamine	570.000	ug/kg	C U	340.000	ug/kg	C U	440.000	ug/kg	C U
Naphthalene	570.000	ug/kg	C U	340.000	ug/kg	C U	440.000	ug/kg	C U
Nitrobenzene	570.000	ug/kg	C U	340.000	ug/kg	C U	440.000	ug/kg	C U
Pentachlorophenol	1400.000	ug/kg	C U	830.000	ug/kg	C U	1100.000	ug/kg	C U

TABLE E-6A
(Continued)

PHASE II - CHEMICAL PARAMETERS

BORING NUMBER	11056			11057			11052		
SAMPLE NUMBER	116335			116337			116427		
	17-18			17-18			19-21		
SAMPLING DATE	05/20/93			05/20/93			05/25/93		
CHEMICAL PARAMETERS	RESULTS	UNITS	L VQ	RESULTS	UNITS	L VQ	RESULTS	UNITS	L VQ
Semivolatile Organics									
Phenanthrene	570.000	ug/kg	C U	340.000	ug/kg	C U	440.000	ug/kg	C U
Phenol	570.000	ug/kg	C U	340.000	ug/kg	C U	440.000	ug/kg	C U
Pyrene	570.000	ug/kg	C U	340.000	ug/kg	C U	440.000	ug/kg	C U
Tributyl phosphate	NA			NA			440.000	ug/kg	C U
bis(2-Chloroethoxy)methane	570.000	ug/kg	C U	340.000	ug/kg	C U	440.000	ug/kg	C U
bis(2-Chloroethyl)ether	570.000	ug/kg	C U	340.000	ug/kg	C U	440.000	ug/kg	C U
bis(2-Chloroisopropyl) ether	570.000	ug/kg	C U	340.000	ug/kg	C U	440.000	ug/kg	C U
bis(2-Ethylhexyl) phthalate	570.000	ug/kg	C U	340.000	ug/kg	C U	52.000	ug/kg	C J
p-Chloroaniline	570.000	ug/kg	C UJ	340.000	ug/kg	C UJ	440.000	ug/kg	C U
Pesticide Organics/PCBs									
4,4'-DDD	5.700	ug/kg	C U	3.500	ug/kg	C U	4.500	ug/kg	C U
4,4'-DDE	5.700	ug/kg	C U	3.500	ug/kg	C U	4.500	ug/kg	C U
4,4'-DDT	5.700	ug/kg	C U	3.500	ug/kg	C U	4.500	ug/kg	C U
Aldrin	3.000	ug/kg	C U	1.800	ug/kg	C U	2.300	ug/kg	C U
Aroclor-1016	57.000	ug/kg	C U	35.000	ug/kg	C U	45.000	ug/kg	C U
Aroclor-1221	120.000	ug/kg	C U	71.000	ug/kg	C U	92.000	ug/kg	C U
Aroclor-1232	57.000	ug/kg	C U	35.000	ug/kg	C U	45.000	ug/kg	C U
Aroclor-1242	57.000	ug/kg	C U	35.000	ug/kg	C U	45.000	ug/kg	C U
Aroclor-1248	57.000	ug/kg	C U	35.000	ug/kg	C U	45.000	ug/kg	C U
Aroclor-1254	57.000	ug/kg	C U	35.000	ug/kg	C U	45.000	ug/kg	C U
Aroclor-1260	57.000	ug/kg	C U	35.000	ug/kg	C U	45.000	ug/kg	C U
Dieldrin	5.700	ug/kg	C U	3.500	ug/kg	C U	4.500	ug/kg	C U
Endosulfan II	5.700	ug/kg	C U	3.500	ug/kg	C U	4.500	ug/kg	C U
Endosulfan sulfate	5.700	ug/kg	C U	3.500	ug/kg	C U	4.500	ug/kg	C U
Endosulfan-I	3.000	ug/kg	C U	1.800	ug/kg	C U	2.300	ug/kg	C U
Endrin	5.700	ug/kg	C U	3.500	ug/kg	C U	4.500	ug/kg	C U
Endrin aldehyde	5.700	ug/kg	C U	3.500	ug/kg	C U	4.500	ug/kg	C UJ
Endrin ketone	5.700	ug/kg	C U	3.500	ug/kg	C U	4.500	ug/kg	C U
Heptachlor	3.000	ug/kg	C U	1.800	ug/kg	C U	2.300	ug/kg	C U
Heptachlor epoxide	3.000	ug/kg	C U	1.800	ug/kg	C U	2.300	ug/kg	C U
Methoxychlor	30.000	ug/kg	C U	18.000	ug/kg	C U	23.000	ug/kg	C U
Toxaphene	300.000	ug/kg	C U	180.000	ug/kg	C U	230.000	ug/kg	C U
alpha-BHC	3.000	ug/kg	C U	1.800	ug/kg	C U	2.300	ug/kg	C U
alpha-Chlordane	3.000	ug/kg	C U	1.800	ug/kg	C U	2.300	ug/kg	C U
beta-BHC	3.000	ug/kg	C U	1.800	ug/kg	C U	2.300	ug/kg	C U
delta-BHC	3.000	ug/kg	C U	1.800	ug/kg	C U	2.300	ug/kg	C UJ
gamma-BHC (Lindane)	3.000	ug/kg	C U	1.800	ug/kg	C U	2.300	ug/kg	C U
gamma-Chlordane	3.000	ug/kg	C U	1.800	ug/kg	C U	2.300	ug/kg	C U

0130

- 5174

TABLE E-6A
(Continued)

PHASE II - CHEMICAL PARAMETERS

BORING NUMBER	11051			11056			11057		
SAMPLE NUMBER	116441			116336			116338		
	22-24			23-24			23-24		
SAMPLING DATE	05/27/93			05/20/93			05/20/93		
CHEMICAL PARAMETERS	RESULTS	UNITS	L VQ	RESULTS	UNITS	L VQ	RESULTS	UNITS	L VQ
Inorganics									
Aluminum	12200.000	mg/kg	C -	NA			NA		
Antimony	3.300	mg/kg	C UJ	NA			NA		
Arsenic	49.700	mg/kg	C -	NA			NA		
Barium	220.000	mg/kg	C -	NA			NA		
Beryllium	1.100	mg/kg	C -	NA			NA		
Cadmium	1.300	mg/kg	C U	NA			NA		
Calcium	64400.000	mg/kg	C -	NA			NA		
Chromium	32.100	mg/kg	C -	NA			NA		
Cobalt	18.200	mg/kg	C -	NA			NA		
Copper	258.000	mg/kg	C -	NA			NA		
Cyanide	0.160	mg/kg	C -	NA			NA		
Iron	22600.000	mg/kg	C -	NA			NA		
Lead	400.000	mg/kg	C -	NA			NA		
Magnesium	15200.000	mg/kg	C -	NA			NA		
Manganese	858.000	mg/kg	C -	NA			NA		
Mercury	0.510	mg/kg	C J	NA			NA		
Molybdenum	9.200	mg/kg	C -	NA			NA		
Nickel	65.100	mg/kg	C -	NA			NA		
Potassium	2060.000	mg/kg	C -	NA			NA		
Selenium	0.980	mg/kg	C J	NA			NA		
Silicon	1250.000	mg/kg	C J	NA			NA		
Silver	9.400	mg/kg	C -	NA			NA		
Sodium	663.000	mg/kg	C -	NA			NA		
Thallium	0.540	mg/kg	C U	NA			NA		
Vanadium	24.100	mg/kg	C -	NA			NA		
Zinc	372.000	mg/kg	C -	NA			NA		
Volatile Organics									
1,1,1-Trichloroethane	14.000	ug/kg	C U	12.000	ug/kg	C U	11.000	ug/kg	C U
1,1,2,2-Tetrachloroethane	14.000	ug/kg	C U	12.000	ug/kg	C U	11.000	ug/kg	C U
1,1,2-Trichloroethane	14.000	ug/kg	C U	12.000	ug/kg	C U	11.000	ug/kg	C U
1,1-Dichloroethane	14.000	ug/kg	C U	12.000	ug/kg	C U	11.000	ug/kg	C U
1,1-Dichloroethene	14.000	ug/kg	C U	12.000	ug/kg	C U	11.000	ug/kg	C U
1,2-Dichloroethane	14.000	ug/kg	C UJ	12.000	ug/kg	C U	11.000	ug/kg	C U
1,2-Dichloroethene	14.000	ug/kg	C U	12.000	ug/kg	C U	11.000	ug/kg	C U
1,2-Dichloropropane	14.000	ug/kg	C U	12.000	ug/kg	C U	11.000	ug/kg	C U
2-Butanone	14.000	ug/kg	C U	12.000	ug/kg	C U	11.000	ug/kg	C U
2-Hexanone	14.000	ug/kg	C U	12.000	ug/kg	C U	11.000	ug/kg	C U
4-Methyl-2-pentanone	14.000	ug/kg	C U	12.000	ug/kg	C U	11.000	ug/kg	C U
Acetone	14.000	ug/kg	C U	12.000	ug/kg	C U	11.000	ug/kg	C U
Benzene	14.000	ug/kg	C U	12.000	ug/kg	C U	11.000	ug/kg	C U

TABLE E-6A
(Continued)

PHASE II - CHEMICAL PARAMETERS

BORING NUMBER	11051			11056			11057		
SAMPLE NUMBER	116441			116336			116338		
	22-24			23-24			23-24		
SAMPLING DATE	05/27/93			05/20/93			05/20/93		
CHEMICAL PARAMETERS	RESULTS	UNITS	L VQ	RESULTS	UNITS	L VQ	RESULTS	UNITS	L VQ
Volatile Organics									
Bromodichloromethane	14.000	ug/kg	C U	12.000	ug/kg	C U	11.000	ug/kg	C U
Bromoform	14.000	ug/kg	C U	12.000	ug/kg	C U	11.000	ug/kg	C U
Bromomethane	14.000	ug/kg	C U	12.000	ug/kg	C U	11.000	ug/kg	C U
Carbon Tetrachloride	14.000	ug/kg	C U	12.000	ug/kg	C U	11.000	ug/kg	C U
Carbon disulfide	14.000	ug/kg	C U	12.000	ug/kg	C U	11.000	ug/kg	C U
Chlorobenzene	14.000	ug/kg	C U	12.000	ug/kg	C U	11.000	ug/kg	C U
Chloroethane	14.000	ug/kg	C U	12.000	ug/kg	C U	11.000	ug/kg	C U
Chloroform	14.000	ug/kg	C U	12.000	ug/kg	C U	11.000	ug/kg	C U
Chloromethane	14.000	ug/kg	C U	12.000	ug/kg	C U	11.000	ug/kg	C U
Dibromochloromethane	14.000	ug/kg	C U	12.000	ug/kg	C U	11.000	ug/kg	C U
Ethylbenzene	14.000	ug/kg	C U	12.000	ug/kg	C U	11.000	ug/kg	C U
Methylene chloride	14.000	ug/kg	C U	12.000	ug/kg	C U	21.000	ug/kg	C U
Styrene	14.000	ug/kg	C U	12.000	ug/kg	C U	11.000	ug/kg	C U
Tetrachloroethene	14.000	ug/kg	C U	12.000	ug/kg	C U	11.000	ug/kg	C U
Toluene	14.000	ug/kg	C U	12.000	ug/kg	C U	11.000	ug/kg	C U
Trichloroethene	14.000	ug/kg	C U	12.000	ug/kg	C U	11.000	ug/kg	C U
Vinyl Acetate	14.000	ug/kg	C U	12.000	ug/kg	C U	11.000	ug/kg	C U
Vinyl chloride	14.000	ug/kg	C U	12.000	ug/kg	C U	11.000	ug/kg	C U
Xylenes, Total	14.000	ug/kg	C U	12.000	ug/kg	C U	11.000	ug/kg	C U
cis-1,3-Dichloropropene	14.000	ug/kg	C U	12.000	ug/kg	C U	11.000	ug/kg	C U
trans-1,3-Dichloropropene	14.000	ug/kg	C U	12.000	ug/kg	C U	11.000	ug/kg	C U
Semivolatile Organics									
1,2,4-Trichlorobenzene	450.000	ug/kg	C U	390.000	ug/kg	C U	350.000	ug/kg	C U
1,2-Dichlorobenzene	450.000	ug/kg	C U	390.000	ug/kg	C U	350.000	ug/kg	C U
1,3-Dichlorobenzene	450.000	ug/kg	C U	390.000	ug/kg	C U	350.000	ug/kg	C U
1,4-Dichlorobenzene	450.000	ug/kg	C U	390.000	ug/kg	C U	350.000	ug/kg	C U
2,4,5-Trichlorophenol	1100.000	ug/kg	C U	950.000	ug/kg	C U	850.000	ug/kg	C U
2,4,6-Trichlorophenol	450.000	ug/kg	C U	390.000	ug/kg	C U	350.000	ug/kg	C U
2,4-Dichlorophenol	450.000	ug/kg	C U	390.000	ug/kg	C U	350.000	ug/kg	C U
2,4-Dimethylphenol	450.000	ug/kg	C U	390.000	ug/kg	C U	350.000	ug/kg	C U
2,4-Dinitrophenol	2200.000	ug/kg	C UJ	950.000	ug/kg	C UJ	850.000	ug/kg	C UJ
2,4-Dinitrotoluene	450.000	ug/kg	C U	390.000	ug/kg	C U	350.000	ug/kg	C U
2,6-Dinitrotoluene	450.000	ug/kg	C U	390.000	ug/kg	C U	350.000	ug/kg	C U
2-Benzyl-4-chlorophenol	450.000	ug/kg	C UJ	NA			NA		
2-Chloronaphthalene	450.000	ug/kg	C U	390.000	ug/kg	C U	350.000	ug/kg	C U
2-Chlorophenol	450.000	ug/kg	C U	390.000	ug/kg	C U	350.000	ug/kg	C U
2-Methylnaphthalene	450.000	ug/kg	C U	390.000	ug/kg	C U	350.000	ug/kg	C U
2-Methylphenol	450.000	ug/kg	C U	390.000	ug/kg	C U	350.000	ug/kg	C U
2-Nitroaniline	1100.000	ug/kg	C U	950.000	ug/kg	C U	850.000	ug/kg	C U
2-Nitrophenol	450.000	ug/kg	C U	390.000	ug/kg	C U	350.000	ug/kg	C U

0132

5174

TABLE E-6A
(Continued)

PHASE II - CHEMICAL PARAMETERS

BORING NUMBER	11051			11056			11057		
SAMPLE NUMBER	116441			116336			116338		
	22-24			23-24			23-24		
SAMPLING DATE	05/27/93			05/20/93			05/20/93		
CHEMICAL PARAMETERS	RESULTS	UNITS	L VQ	RESULTS	UNITS	L VQ	RESULTS	UNITS	L VQ
Semivolatile Organics									
3,3'-Dichlorobenzidine	450.000	ug/kg	C U	390.000	ug/kg	C UJ	350.000	ug/kg	C UJ
3-Nitroaniline	1100.000	ug/kg	C U	950.000	ug/kg	C R	850.000	ug/kg	C R
4,6-Dinitro-2-methylphenol	1100.000	ug/kg	C U	950.000	ug/kg	C U	850.000	ug/kg	C U
4-Bromophenyl phenyl ether	450.000	ug/kg	C U	390.000	ug/kg	C U	350.000	ug/kg	C U
4-Chloro-3-methylphenol	450.000	ug/kg	C U	390.000	ug/kg	C U	350.000	ug/kg	C U
4-Chlorophenylphenyl ether	450.000	ug/kg	C U	390.000	ug/kg	C U	350.000	ug/kg	C U
4-Methylphenol	54.000	ug/kg	C J	390.000	ug/kg	C U	350.000	ug/kg	C U
4-Nitroaniline	1100.000	ug/kg	C U	950.000	ug/kg	C UJ	850.000	ug/kg	C UJ
4-Nitrophenol	1100.000	ug/kg	C U	950.000	ug/kg	C U	850.000	ug/kg	C U
Acenaphthene	450.000	ug/kg	C U	390.000	ug/kg	C U	350.000	ug/kg	C U
Acenaphthylene	450.000	ug/kg	C U	390.000	ug/kg	C U	350.000	ug/kg	C U
Anthracene	450.000	ug/kg	C U	390.000	ug/kg	C U	350.000	ug/kg	C U
Benzo(a)anthracene	100.000	ug/kg	C J	390.000	ug/kg	C U	350.000	ug/kg	C U
Benzo(a)pyrene	88.000	ug/kg	C J	390.000	ug/kg	C U	350.000	ug/kg	C U
Benzo(b)fluoranthene	81.000	ug/kg	C J	390.000	ug/kg	C U	350.000	ug/kg	C U
Benzo(g,h,i)perylene	57.000	ug/kg	C J	390.000	ug/kg	C U	350.000	ug/kg	C U
Benzo(k)fluoranthene	84.000	ug/kg	C J	390.000	ug/kg	C U	350.000	ug/kg	C U
Benzoic acid	2200.000	ug/kg	C U	NA			NA		
Benzyl alcohol	450.000	ug/kg	C R	NA			NA		
Butyl benzyl phthalate	450.000	ug/kg	C U	390.000	ug/kg	C U	350.000	ug/kg	C U
Carbazole	450.000	ug/kg	C U	390.000	ug/kg	C U	350.000	ug/kg	C U
Chrysene	110.000	ug/kg	C J	390.000	ug/kg	C U	350.000	ug/kg	C U
Di-n-butyl phthalate	55.000	ug/kg	C J	43.000	ug/kg	C J	350.000	ug/kg	C U
Di-n-octyl phthalate	450.000	ug/kg	C UJ	390.000	ug/kg	C U	350.000	ug/kg	C U
Dibenzo(a,h)anthracene	450.000	ug/kg	C UJ	390.000	ug/kg	C U	350.000	ug/kg	C U
Dibenzofuran	450.000	ug/kg	C U	390.000	ug/kg	C U	350.000	ug/kg	C U
Diethyl phthalate	450.000	ug/kg	C U	390.000	ug/kg	C U	350.000	ug/kg	C U
Dimethyl phthalate	450.000	ug/kg	C U	390.000	ug/kg	C U	350.000	ug/kg	C U
Fluoranthene	260.000	ug/kg	C J	390.000	ug/kg	C U	350.000	ug/kg	C U
Fluorene	450.000	ug/kg	C U	390.000	ug/kg	C U	350.000	ug/kg	C U
Hexachlorobenzene	450.000	ug/kg	C U	390.000	ug/kg	C U	350.000	ug/kg	C U
Hexachlorobutadiene	450.000	ug/kg	C U	390.000	ug/kg	C U	350.000	ug/kg	C U
Hexachlorocyclopentadiene	450.000	ug/kg	C U	390.000	ug/kg	C U	350.000	ug/kg	C U
Hexachloroethane	450.000	ug/kg	C U	390.000	ug/kg	C U	350.000	ug/kg	C U
Indeno(1,2,3-cd)pyrene	46.000	ug/kg	C J	390.000	ug/kg	C U	350.000	ug/kg	C U
Isophorone	450.000	ug/kg	C U	390.000	ug/kg	C U	350.000	ug/kg	C U
N-Nitroso-di-n-propylamine	450.000	ug/kg	C U	390.000	ug/kg	C U	350.000	ug/kg	C U
N-Nitrosodimethylamine	450.000	ug/kg	C U	NA			NA		
N-Nitrosodiphenylamine	450.000	ug/kg	C U	390.000	ug/kg	C U	350.000	ug/kg	C U
Naphthalene	450.000	ug/kg	C U	390.000	ug/kg	C U	350.000	ug/kg	C U
Nitrobenzene	450.000	ug/kg	C U	390.000	ug/kg	C U	350.000	ug/kg	C U
Pentachlorophenol	1100.000	ug/kg	C U	950.000	ug/kg	C U	850.000	ug/kg	C U

TABLE E-6A
(Continued)

PHASE II - CHEMICAL PARAMETERS

BORING NUMBER	11051			11056			11057		
SAMPLE NUMBER	116441			116336			116338		
	22-24			23-24			23-24		
SAMPLING DATE	05/27/93			05/20/93			05/20/93		
CHEMICAL PARAMETERS	RESULTS	UNITS	L VQ	RESULTS	UNITS	L VQ	RESULTS	UNITS	L VQ
Semivolatile Organics									
Phenanthrene	210.000	ug/kg	C J	390.000	ug/kg	C U	350.000	ug/kg	C U
Phenol	450.000	ug/kg	C U	390.000	ug/kg	C U	350.000	ug/kg	C U
Pyrene	220.000	ug/kg	C J	390.000	ug/kg	C U	350.000	ug/kg	C U
Tributyl phosphate	200.000	ug/kg	C J	NA			NA		
bis(2-Chloroethoxy)methane	450.000	ug/kg	C U	390.000	ug/kg	C U	350.000	ug/kg	C U
bis(2-Chloroethyl)ether	450.000	ug/kg	C U	390.000	ug/kg	C U	350.000	ug/kg	C U
bis(2-Chloroisopropyl) ether	450.000	ug/kg	C U	390.000	ug/kg	C U	350.000	ug/kg	C U
bis(2-Ethylhexyl) phthalate	160.000	ug/kg	C J	57.000	ug/kg	C J	350.000	ug/kg	C U
p-Chloroaniline	450.000	ug/kg	C U	390.000	ug/kg	C UJ	350.000	ug/kg	C UJ
Pesticide Organics/PCBs									
4,4'-DDD	4.500	ug/kg	C UJ	3.900	ug/kg	C U	3.500	ug/kg	C U
4,4'-DDE	4.500	ug/kg	C UJ	3.900	ug/kg	C U	3.500	ug/kg	C U
4,4'-DDT	4.500	ug/kg	C UJ	3.900	ug/kg	C U	3.500	ug/kg	C U
Aldrin	2.300	ug/kg	C UJ	2.000	ug/kg	C U	1.800	ug/kg	C U
Aroclor-1016	45.000	ug/kg	C UJ	39.000	ug/kg	C U	35.000	ug/kg	C U
Aroclor-1221	91.000	ug/kg	C UJ	80.000	ug/kg	C U	71.000	ug/kg	C U
Aroclor-1232	45.000	ug/kg	C UJ	39.000	ug/kg	C U	35.000	ug/kg	C U
Aroclor-1242	45.000	ug/kg	C UJ	39.000	ug/kg	C U	35.000	ug/kg	C U
Aroclor-1248	45.000	ug/kg	C UJ	39.000	ug/kg	C U	35.000	ug/kg	C U
Aroclor-1254	180.000	ug/kg	C J	39.000	ug/kg	C U	35.000	ug/kg	C U
Aroclor-1260	45.000	ug/kg	C UJ	39.000	ug/kg	C U	35.000	ug/kg	C U
Dieldrin	4.500	ug/kg	C UJ	3.900	ug/kg	C U	3.500	ug/kg	C U
Endosulfan II	4.500	ug/kg	C UJ	3.900	ug/kg	C U	3.500	ug/kg	C U
Endosulfan sulfate	4.500	ug/kg	C UJ	3.900	ug/kg	C U	3.500	ug/kg	C U
Endosulfan-I	2.300	ug/kg	C UJ	2.000	ug/kg	C U	1.800	ug/kg	C U
Endrin	4.500	ug/kg	C UJ	3.900	ug/kg	C U	3.500	ug/kg	C U
Endrin aldehyde	4.500	ug/kg	C UJ	3.900	ug/kg	C U	3.500	ug/kg	C U
Endrin ketone	4.500	ug/kg	C UJ	3.900	ug/kg	C U	3.500	ug/kg	C U
Heptachlor	2.300	ug/kg	C UJ	2.000	ug/kg	C U	1.800	ug/kg	C U
Heptachlor epoxide	2.300	ug/kg	C UJ	2.000	ug/kg	C U	1.800	ug/kg	C U
Methoxychlor	23.000	ug/kg	C UJ	20.000	ug/kg	C U	18.000	ug/kg	C U
Toxaphene	230.000	ug/kg	C UJ	200.000	ug/kg	C U	180.000	ug/kg	C U
alpha-BHC	2.300	ug/kg	C UJ	2.000	ug/kg	C U	1.800	ug/kg	C U
alpha-Chlordane	2.300	ug/kg	C UJ	2.000	ug/kg	C U	1.800	ug/kg	C U
beta-BHC	2.300	ug/kg	C UJ	2.000	ug/kg	C U	1.800	ug/kg	C U
delta-BHC	2.300	ug/kg	C UJ	2.000	ug/kg	C U	1.800	ug/kg	C U
gamma-BHC (Lindane)	2.300	ug/kg	C UJ	2.000	ug/kg	C U	1.800	ug/kg	C U
gamma-Chlordane	2.300	ug/kg	C UJ	2.000	ug/kg	C U	1.800	ug/kg	C U

TABLE E-6A
(Continued)

PHASE II - CHEMICAL PARAMETERS

BORING NUMBER	11054			11055			1994		
SAMPLE NUMBER	116341			116332			116264		
	23-24			23.5-25			2-3.5		
SAMPLING DATE	05/21/93			05/19/93			05/12/93		
CHEMICAL PARAMETERS	RESULTS	UNITS	L VQ	RESULTS	UNITS	L VQ	RESULTS	UNITS	L VQ
Inorganics									
Aluminum	NA			NA			9010.000	mg/kg	C -
Antimony	NA			NA			1.300	mg/kg	C UJ
Arsenic	NA			NA			12.100	mg/kg	C -
Barium	NA			NA			228.000	mg/kg	C -
Beryllium	NA			NA			1.400	mg/kg	C -
Cadmium	NA			NA			1.300	mg/kg	C U
Calcium	NA			NA			5840.000	mg/kg	C -
Chromium	NA			NA			11.200	mg/kg	C -
Cobalt	NA			NA			5.600	mg/kg	C -
Copper	NA			NA			31.500	mg/kg	C -
Cyanide	NA			NA			0.840	mg/kg	C -
Iron	NA			NA			3430.000	mg/kg	C -
Lead	NA			NA			14.400	mg/kg	C -
Magnesium	NA			NA			715.000	mg/kg	C -
Manganese	NA			NA			69.800	mg/kg	C -
Mercury	NA			NA			0.170	mg/kg	C -
Molybdenum	NA			NA			6.900	mg/kg	C -
Nickel	NA			NA			14.800	mg/kg	C -
Potassium	NA			NA			1230.000	mg/kg	C -
Selenium	NA			NA			11.100	mg/kg	C -
Silicon	NA			NA			496.000	mg/kg	C -
Silver	NA			NA			2.700	mg/kg	C U
Sodium	NA			NA			174.000	mg/kg	C -
Thallium	NA			NA			0.530	mg/kg	C U
Vanadium	NA			NA			36.700	mg/kg	C -
Zinc	NA			NA			20.900	mg/kg	C -
Volatile Organics									
1,1,1-Trichloroethane	11.000	ug/kg	C U	10.000	ug/kg	C U	18.000	ug/kg	C J
1,1,2,2-Tetrachloroethane	11.000	ug/kg	C U	10.000	ug/kg	C U	14.000	ug/kg	C UJ
1,1,2-Trichloroethane	11.000	ug/kg	C U	10.000	ug/kg	C U	14.000	ug/kg	C UJ
1,1-Dichloroethane	11.000	ug/kg	C U	10.000	ug/kg	C U	14.000	ug/kg	C U
1,1-Dichloroethene	11.000	ug/kg	C U	10.000	ug/kg	C U	14.000	ug/kg	C U
1,2-Dichloroethane	11.000	ug/kg	C U	10.000	ug/kg	C U	14.000	ug/kg	C U
1,2-Dichloroethene	11.000	ug/kg	C U	10.000	ug/kg	C U	14.000	ug/kg	C U
1,2-Dichloropropane	11.000	ug/kg	C U	10.000	ug/kg	C U	14.000	ug/kg	C UJ
2-Butanone	11.000	ug/kg	C U	10.000	ug/kg	C U	14.000	ug/kg	C U
2-Hexanone	11.000	ug/kg	C U	10.000	ug/kg	C U	14.000	ug/kg	C UJ
4-Methyl-2-pentanone	11.000	ug/kg	C U	10.000	ug/kg	C U	14.000	ug/kg	C UJ
Acetone	11.000	ug/kg	C U	11.000	ug/kg	C -	12.000	ug/kg	C J
Benzene	11.000	ug/kg	C U	10.000	ug/kg	C U	14.000	ug/kg	C UJ

TABLE E-6A
(Continued)

PHASE II - CHEMICAL PARAMETERS

BORING NUMBER	11054			11055			1994		
SAMPLE NUMBER	116341			116332			116264		
	23-24			23.5-25			2-3.5		
SAMPLING DATE	05/21/93			05/19/93			05/12/93		
CHEMICAL PARAMETERS	RESULTS	UNITS	L VQ	RESULTS	UNITS	L VQ	RESULTS	UNITS	L VQ
Volatile Organics									
Bromodichloromethane	11.000	ug/kg	C U	10.000	ug/kg	C U	14.000	ug/kg	C UJ
Bromoform	11.000	ug/kg	C U	10.000	ug/kg	C U	14.000	ug/kg	C UJ
Bromomethane	11.000	ug/kg	C U	10.000	ug/kg	C UJ	14.000	ug/kg	C U
Carbon Tetrachloride	11.000	ug/kg	C U	10.000	ug/kg	C U	14.000	ug/kg	C UJ
Carbon disulfide	11.000	ug/kg	C U	10.000	ug/kg	C U	14.000	ug/kg	C U
Chlorobenzene	11.000	ug/kg	C U	10.000	ug/kg	C U	14.000	ug/kg	C UJ
Chloroethane	11.000	ug/kg	C U	10.000	ug/kg	C U	14.000	ug/kg	C U
Chloroform	11.000	ug/kg	C U	10.000	ug/kg	C U	14.000	ug/kg	C U
Chloromethane	11.000	ug/kg	C U	10.000	ug/kg	C U	14.000	ug/kg	C U
Dibromochloromethane	11.000	ug/kg	C U	10.000	ug/kg	C U	14.000	ug/kg	C UJ
Ethylbenzene	11.000	ug/kg	C U	10.000	ug/kg	C U	14.000	ug/kg	C UJ
Methylene chloride	11.000	ug/kg	C U	17.000	ug/kg	C U	54.000	ug/kg	C J
Styrene	11.000	ug/kg	C U	10.000	ug/kg	C U	14.000	ug/kg	C UJ
Tetrachloroethene	11.000	ug/kg	C U	10.000	ug/kg	C U	14.000	ug/kg	C UJ
Toluene	1.000	ug/kg	C J	37.000	ug/kg	C -	4.000	ug/kg	C J
Trichloroethene	11.000	ug/kg	C U	10.000	ug/kg	C U	14.000	ug/kg	C UJ
Vinyl Acetate	11.000	ug/kg	C U	10.000	ug/kg	C U	14.000	ug/kg	C UJ
Vinyl chloride	11.000	ug/kg	C U	10.000	ug/kg	C U	14.000	ug/kg	C U
Xylenes, Total	11.000	ug/kg	C U	10.000	ug/kg	C U	14.000	ug/kg	C UJ
cis-1,3-Dichloropropene	11.000	ug/kg	C U	10.000	ug/kg	C U	14.000	ug/kg	C UJ
trans-1,3-Dichloropropene	11.000	ug/kg	C U	10.000	ug/kg	C U	14.000	ug/kg	C UJ
Semivolatile Organics									
1,2,4-Trichlorobenzene	370.000	ug/kg	C U	340.000	ug/kg	C U	460.000	ug/kg	C U
1,2-Dichlorobenzene	370.000	ug/kg	C U	340.000	ug/kg	C U	460.000	ug/kg	C U
1,3-Dichlorobenzene	370.000	ug/kg	C U	340.000	ug/kg	C U	460.000	ug/kg	C U
1,4-Dichlorobenzene	370.000	ug/kg	C U	340.000	ug/kg	C U	460.000	ug/kg	C U
2,4,5-Trichlorophenol	900.000	ug/kg	C U	830.000	ug/kg	C U	1100.000	ug/kg	C U
2,4,6-Trichlorophenol	370.000	ug/kg	C U	340.000	ug/kg	C U	460.000	ug/kg	C U
2,4-Dichlorophenol	370.000	ug/kg	C U	340.000	ug/kg	C U	460.000	ug/kg	C U
2,4-Dimethylphenol	370.000	ug/kg	C U	340.000	ug/kg	C U	460.000	ug/kg	C U
2,4-Dinitrophenol	900.000	ug/kg	C UJ	830.000	ug/kg	C UJ	1100.000	ug/kg	C UJ
2,4-Dinitrotoluene	370.000	ug/kg	C U	340.000	ug/kg	C U	460.000	ug/kg	C U
2,6-Dinitrotoluene	370.000	ug/kg	C U	340.000	ug/kg	C U	460.000	ug/kg	C U
2-Chloronaphthalene	370.000	ug/kg	C U	340.000	ug/kg	C U	460.000	ug/kg	C U
2-Chlorophenol	370.000	ug/kg	C U	340.000	ug/kg	C U	460.000	ug/kg	C U
2-Methylnaphthalene	370.000	ug/kg	C U	340.000	ug/kg	C U	460.000	ug/kg	C U
2-Methylphenol	370.000	ug/kg	C U	340.000	ug/kg	C U	460.000	ug/kg	C U
2-Nitroaniline	900.000	ug/kg	C U	830.000	ug/kg	C U	1100.000	ug/kg	C U
2-Nitrophenol	370.000	ug/kg	C U	340.000	ug/kg	C U	460.000	ug/kg	C U
3,3'-Dichlorobenzidine	370.000	ug/kg	C UJ	340.000	ug/kg	C U	460.000	ug/kg	C U

0136

5174

TABLE E-6A
(Continued)

PHASE II - CHEMICAL PARAMETERS

BORING NUMBER	11054			11055			1994		
SAMPLE NUMBER	116341			116332			116264		
	23-24			23.5-25			2-3.5		
SAMPLING DATE	05/21/93			05/19/93			05/12/93		
CHEMICAL PARAMETERS	RESULTS	UNITS	L VQ	RESULTS	UNITS	L VQ	RESULTS	UNITS	L VQ
Semivolatile Organics									
3-Nitroaniline	900.000	ug/kg	C R	830.000	ug/kg	C U	1100.000	ug/kg	C U
4,6-Dinitro-2-methylphenol	900.000	ug/kg	C U	830.000	ug/kg	C U	1100.000	ug/kg	C U
4-Bromophenyl phenyl ether	370.000	ug/kg	C U	340.000	ug/kg	C U	460.000	ug/kg	C U
4-Chloro-3-methylphenol	370.000	ug/kg	C U	340.000	ug/kg	C U	460.000	ug/kg	C U
4-Chlorophenylphenyl ether	370.000	ug/kg	C U	340.000	ug/kg	C U	460.000	ug/kg	C U
4-Methylphenol	370.000	ug/kg	C U	340.000	ug/kg	C U	460.000	ug/kg	C U
4-Nitroaniline	900.000	ug/kg	C UJ	830.000	ug/kg	C U	1100.000	ug/kg	C U
4-Nitrophenol	900.000	ug/kg	C U	830.000	ug/kg	C U	1100.000	ug/kg	C U
Acenaphthene	370.000	ug/kg	C U	340.000	ug/kg	C U	460.000	ug/kg	C U
Acenaphthylene	370.000	ug/kg	C U	340.000	ug/kg	C U	460.000	ug/kg	C U
Anthracene	370.000	ug/kg	C U	340.000	ug/kg	C U	49.000	ug/kg	C J
Benzo(a)anthracene	370.000	ug/kg	C U	340.000	ug/kg	C U	130.000	ug/kg	C J
Benzo(a)pyrene	370.000	ug/kg	C U	340.000	ug/kg	C U	98.000	ug/kg	C J
Benzo(b)fluoranthene	370.000	ug/kg	C U	340.000	ug/kg	C U	140.000	ug/kg	C J
Benzo(g,h,i)perylene	370.000	ug/kg	C U	340.000	ug/kg	C U	59.000	ug/kg	C J
Benzo(k)fluoranthene	370.000	ug/kg	C U	340.000	ug/kg	C U	190.000	ug/kg	C J
Butyl benzyl phthalate	370.000	ug/kg	C U	340.000	ug/kg	C U	460.000	ug/kg	C U
Carbazole	370.000	ug/kg	C U	340.000	ug/kg	C U	460.000	ug/kg	C U
Chrysene	370.000	ug/kg	C U	340.000	ug/kg	C U	150.000	ug/kg	C J
Di-n-butyl phthalate	370.000	ug/kg	C U	340.000	ug/kg	C U	460.000	ug/kg	C U
Di-n-octyl phthalate	370.000	ug/kg	C U	340.000	ug/kg	C U	460.000	ug/kg	C U
Dibenzo(a,h)anthracene	370.000	ug/kg	C U	340.000	ug/kg	C U	460.000	ug/kg	C U
Dibenzofuran	370.000	ug/kg	C U	340.000	ug/kg	C U	460.000	ug/kg	C U
Diethyl phthalate	370.000	ug/kg	C U	340.000	ug/kg	C U	460.000	ug/kg	C U
Dimethyl phthalate	370.000	ug/kg	C U	340.000	ug/kg	C U	460.000	ug/kg	C U
Fluoranthene	370.000	ug/kg	C U	340.000	ug/kg	C U	340.000	ug/kg	C J
Fluorene	370.000	ug/kg	C U	340.000	ug/kg	C U	460.000	ug/kg	C U
Hexachlorobenzene	370.000	ug/kg	C U	340.000	ug/kg	C U	460.000	ug/kg	C U
Hexachlorobutadiene	370.000	ug/kg	C U	340.000	ug/kg	C U	460.000	ug/kg	C U
Hexachlorocyclopentadiene	370.000	ug/kg	C U	340.000	ug/kg	C UJ	460.000	ug/kg	C UJ
Hexachloroethane	370.000	ug/kg	C U	340.000	ug/kg	C U	460.000	ug/kg	C U
Indeno(1,2,3-cd)pyrene	370.000	ug/kg	C U	340.000	ug/kg	C U	63.000	ug/kg	C J
Isophorone	370.000	ug/kg	C U	340.000	ug/kg	C U	460.000	ug/kg	C U
N-Nitroso-di-n-propylamine	370.000	ug/kg	C U	340.000	ug/kg	C U	460.000	ug/kg	C U
N-Nitrosodiphenylamine	370.000	ug/kg	C U	340.000	ug/kg	C U	460.000	ug/kg	C U
Naphthalene	370.000	ug/kg	C U	340.000	ug/kg	C U	460.000	ug/kg	C U
Nitrobenzene	370.000	ug/kg	C U	340.000	ug/kg	C U	460.000	ug/kg	C U
Pentachlorophenol	900.000	ug/kg	C U	830.000	ug/kg	C U	1100.000	ug/kg	C U
Phenanthrene	370.000	ug/kg	C U	340.000	ug/kg	C U	280.000	ug/kg	C J
Phenol	370.000	ug/kg	C U	340.000	ug/kg	C U	460.000	ug/kg	C U
Pyrene	370.000	ug/kg	C U	340.000	ug/kg	C U	260.000	ug/kg	C J
bis(2-Chloroethoxy)methane	370.000	ug/kg	C U	340.000	ug/kg	C U	460.000	ug/kg	C U

TABLE E-6A
(Continued)

PHASE II - CHEMICAL PARAMETERS

BORING NUMBER	11054			11055			1994		
SAMPLE NUMBER	116341			116332			116264		
	23-24			23.5-25			2-3.5		
SAMPLING DATE	05/21/93			05/19/93			05/12/93		
CHEMICAL PARAMETERS	RESULTS	UNITS	L VQ	RESULTS	UNITS	L VQ	RESULTS	UNITS	L VQ
Semivolatile Organics									
bis(2-Chloroethyl)ether	370.000	ug/kg	C U	340.000	ug/kg	C U	460.000	ug/kg	C U
bis(2-Chloroisopropyl) ether	370.000	ug/kg	C U	340.000	ug/kg	C U	460.000	ug/kg	C U
bis(2-Ethylhexyl) phthalate	46.000	ug/kg	C J	36.000	ug/kg	C J	500.000	ug/kg	C -
p-Chloroaniline	370.000	ug/kg	C UJ	340.000	ug/kg	C U	460.000	ug/kg	C U
Pesticide Organics/PCBs									
4,4'-DDD	3.600	ug/kg	C U	3.500	ug/kg	C U	4.500	ug/kg	C UJ
4,4'-DDE	3.600	ug/kg	C U	3.500	ug/kg	C U	4.500	ug/kg	C UJ
4,4'-DDT	3.600	ug/kg	C U	3.500	ug/kg	C U	4.500	ug/kg	C UJ
Aldrin	1.900	ug/kg	C U	1.800	ug/kg	C U	2.300	ug/kg	C UJ
Aroclor-1016	36.000	ug/kg	C U	35.000	ug/kg	C U	45.000	ug/kg	C U
Aroclor-1221	74.000	ug/kg	C U	71.000	ug/kg	C U	91.000	ug/kg	C U
Aroclor-1232	36.000	ug/kg	C U	35.000	ug/kg	C U	45.000	ug/kg	C U
Aroclor-1242	36.000	ug/kg	C U	35.000	ug/kg	C U	45.000	ug/kg	C U
Aroclor-1248	36.000	ug/kg	C U	35.000	ug/kg	C U	45.000	ug/kg	C U
Aroclor-1254	36.000	ug/kg	C U	35.000	ug/kg	C U	45.000	ug/kg	C U
Aroclor-1260	36.000	ug/kg	C U	35.000	ug/kg	C U	45.000	ug/kg	C U
Dieldrin	3.600	ug/kg	C U	3.500	ug/kg	C U	4.500	ug/kg	C UJ
Endosulfan II	3.600	ug/kg	C U	3.500	ug/kg	C U	4.500	ug/kg	C UJ
Endosulfan sulfate	3.600	ug/kg	C U	3.500	ug/kg	C U	4.500	ug/kg	C UJ
Endosulfan-I	1.900	ug/kg	C U	1.800	ug/kg	C U	2.300	ug/kg	C UJ
Endrin	3.600	ug/kg	C U	3.500	ug/kg	C U	4.500	ug/kg	C UJ
Endrin aldehyde	3.600	ug/kg	C U	3.500	ug/kg	C U	4.500	ug/kg	C UJ
Endrin ketone	3.600	ug/kg	C U	3.500	ug/kg	C U	4.500	ug/kg	C UJ
Heptachlor	1.900	ug/kg	C U	1.800	ug/kg	C U	2.300	ug/kg	C UJ
Heptachlor epoxide	1.900	ug/kg	C U	1.800	ug/kg	C U	2.300	ug/kg	C UJ
Methoxychlor	19.000	ug/kg	C U	18.000	ug/kg	C U	23.000	ug/kg	C UJ
Toxaphene	190.000	ug/kg	C U	180.000	ug/kg	C U	230.000	ug/kg	C U
alpha-BHC	1.900	ug/kg	C U	1.800	ug/kg	C U	2.300	ug/kg	C UJ
alpha-Chlordane	1.900	ug/kg	C U	1.800	ug/kg	C U	2.300	ug/kg	C UJ
beta-BHC	1.900	ug/kg	C U	1.800	ug/kg	C U	2.300	ug/kg	C UJ
delta-BHC	1.900	ug/kg	C U	1.800	ug/kg	C U	2.300	ug/kg	C UJ
gamma-BHC (Lindane)	1.900	ug/kg	C U	1.800	ug/kg	C U	2.300	ug/kg	C UJ
gamma-Chlordane	1.900	ug/kg	C U	1.800	ug/kg	C U	2.300	ug/kg	C UJ

0138

5174

TABLE E-6A
(Continued)

PHASE II - CHEMICAL PARAMETERS

BORING NUMBER	1994			1994			1994		
SAMPLE NUMBER	116283			116301			116312		
	14-15.5			26-27.5			36-37.5		
SAMPLING DATE	05/12/93			05/13/93			05/13/93		
CHEMICAL PARAMETERS	RESULTS	UNITS	L VQ	RESULTS	UNITS	L VQ	RESULTS	UNITS	L VQ
Inorganics									
Aluminum	7970.000	mg/kg	C -	11100.000	mg/kg	C -	3780.000	mg/kg	D -
Antimony	5.500	mg/kg	C J	1.200	mg/kg	C UJ	1.100	mg/kg	D UJ
Arsenic	25.100	mg/kg	C -	6.800	mg/kg	C -	3.000	mg/kg	D -
Barium	612.000	mg/kg	C -	77.500	mg/kg	C -	25.400	mg/kg	D J
Beryllium	1.800	mg/kg	C -	0.480	mg/kg	C U	0.420	mg/kg	D U
Cadmium	1.500	mg/kg	C U	1.200	mg/kg	C U	1.100	mg/kg	D U
Calcium	8150.000	mg/kg	C -	10200.000	mg/kg	C -	109000.000	mg/kg	D -
Chromium	10.400	mg/kg	C -	12.400	mg/kg	C -	3.600	mg/kg	D J
Cobalt	7.300	mg/kg	C -	7.500	mg/kg	C -	3.000	mg/kg	D J
Copper	35.700	mg/kg	C -	13.400	mg/kg	C -	7.000	mg/kg	D -
Cyanide	0.830	mg/kg	C -	0.130	mg/kg	C -	0.110	mg/kg	D U
Iron	4460.000	mg/kg	C -	16100.000	mg/kg	C -	8240.000	mg/kg	D -
Lead	14.400	mg/kg	C -	11.600	mg/kg	C -	3.300	mg/kg	D -
Magnesium	889.000	mg/kg	C -	4810.000	mg/kg	C -	55900.000	mg/kg	D -
Manganese	290.000	mg/kg	C -	597.000	mg/kg	C -	334.000	mg/kg	D J
Mercury	0.180	mg/kg	C -	0.110	mg/kg	C U	0.090	mg/kg	D U
Molybdenum	2.900	mg/kg	C U	5.000	mg/kg	C -	2.900	mg/kg	D J
Nickel	16.900	mg/kg	C -	13.800	mg/kg	C -	9.900	mg/kg	D -
Potassium	1030.000	mg/kg	C -	1540.000	mg/kg	C -	649.000	mg/kg	D -
Selenium	5.100	mg/kg	C -	0.430	mg/kg	C U	0.420	mg/kg	D U
Silicon	666.000	mg/kg	C -	1040.000	mg/kg	C -	474.000	mg/kg	D -
Silver	2.900	mg/kg	C U	4.700	mg/kg	C -	2.200	mg/kg	D J
Sodium	334.000	mg/kg	C -	82.200	mg/kg	C -	183.000	mg/kg	D -
Thallium	0.590	mg/kg	C U	0.430	mg/kg	C U	0.420	mg/kg	D U
Vanadium	32.100	mg/kg	C -	25.300	mg/kg	C -	12.400	mg/kg	D J
Zinc	17.700	mg/kg	C -	50.200	mg/kg	C -	26.100	mg/kg	D J
Volatile Organics									
1,1,1-Trichloroethane	35.000	ug/kg	C J	5.000	ug/kg	C J	11.000	ug/kg	D U
1,1,2,2-Tetrachloroethane	15.000	ug/kg	C UJ	12.000	ug/kg	C UJ	11.000	ug/kg	D U
1,1,2-Trichloroethane	15.000	ug/kg	C UJ	12.000	ug/kg	C U	11.000	ug/kg	D U
1,1-Dichloroethane	15.000	ug/kg	C UJ	12.000	ug/kg	C UJ	11.000	ug/kg	D U
1,1-Dichloroethene	15.000	ug/kg	C UJ	12.000	ug/kg	C U	11.000	ug/kg	D U
1,2-Dichloroethane	15.000	ug/kg	C UJ	12.000	ug/kg	C UJ	11.000	ug/kg	D U
1,2-Dichloroethene	15.000	ug/kg	C UJ	12.000	ug/kg	C U	11.000	ug/kg	D U
1,2-Dichloropropane	15.000	ug/kg	C UJ	12.000	ug/kg	C UJ	11.000	ug/kg	D U
2-Butanone	15.000	ug/kg	C UJ	12.000	ug/kg	C U	11.000	ug/kg	D U
2-Hexanone	15.000	ug/kg	C UJ	12.000	ug/kg	C UJ	11.000	ug/kg	D U
4-Methyl-2-pentanone	3.000	ug/kg	C J	12.000	ug/kg	C UJ	11.000	ug/kg	D U
Acetone	29.000	ug/kg	C J	3.000	ug/kg	C J	12.000	ug/kg	D -
Benzene	15.000	ug/kg	C UJ	12.000	ug/kg	C U	11.000	ug/kg	D U

TABLE E-6A
(Continued)

PHASE II - CHEMICAL PARAMETERS

BORING NUMBER	1994			1994			1994		
SAMPLE NUMBER	116283			116301			116312		
	14-15.5			26-27.5			36-37.5		
SAMPLING DATE	05/12/93			05/13/93			05/13/93		
CHEMICAL PARAMETERS	RESULTS	UNITS	L VQ	RESULTS	UNITS	L VQ	RESULTS	UNITS	L VQ
Volatile Organics									
Bromodichloromethane	15.000	ug/kg	C UJ	12.000	ug/kg	C U	11.000	ug/kg	D U
Bromoform	15.000	ug/kg	C UJ	12.000	ug/kg	C U	11.000	ug/kg	D U
Bromomethane	15.000	ug/kg	C UJ	12.000	ug/kg	C U	11.000	ug/kg	D U
Carbon Tetrachloride	15.000	ug/kg	C UJ	12.000	ug/kg	C U	11.000	ug/kg	D U
Carbon disulfide	15.000	ug/kg	C UJ	12.000	ug/kg	C U	11.000	ug/kg	D U
Chlorobenzene	15.000	ug/kg	C UJ	12.000	ug/kg	C UJ	11.000	ug/kg	D U
Chloroethane	15.000	ug/kg	C UJ	12.000	ug/kg	C U	11.000	ug/kg	D U
Chloroform	15.000	ug/kg	C UJ	12.000	ug/kg	C U	11.000	ug/kg	D U
Chloromethane	52.000	ug/kg	C J	12.000	ug/kg	C U	11.000	ug/kg	D U
Dibromochloromethane	15.000	ug/kg	C UJ	12.000	ug/kg	C U	11.000	ug/kg	D U
Ethylbenzene	15.000	ug/kg	C UJ	12.000	ug/kg	C UJ	11.000	ug/kg	D U
Methylene chloride	110.000	ug/kg	C J	66.000	ug/kg	C -	53.000	ug/kg	D -
Styrene	15.000	ug/kg	C UJ	12.000	ug/kg	C UJ	11.000	ug/kg	D U
Tetrachloroethene	15.000	ug/kg	C UJ	12.000	ug/kg	C UJ	11.000	ug/kg	D U
Toluene	22.000	ug/kg	C J	97.000	ug/kg	C J	4.000	ug/kg	D J
Trichloroethene	15.000	ug/kg	C UJ	12.000	ug/kg	C U	11.000	ug/kg	D U
Vinyl Acetate	15.000	ug/kg	C UJ	12.000	ug/kg	C U	11.000	ug/kg	D U
Vinyl chloride	15.000	ug/kg	C UJ	12.000	ug/kg	C U	11.000	ug/kg	D U
Xylenes, Total	15.000	ug/kg	C UJ	12.000	ug/kg	C UJ	11.000	ug/kg	D U
cis-1,3-Dichloropropene	15.000	ug/kg	C UJ	12.000	ug/kg	C U	11.000	ug/kg	D U
trans-1,3-Dichloropropene	15.000	ug/kg	C UJ	12.000	ug/kg	C U	11.000	ug/kg	D U
Semivolatile Organics									
1,2,4-Trichlorobenzene	500.000	ug/kg	C U	410.000	ug/kg	C U	350.000	ug/kg	D U
1,2-Dichlorobenzene	500.000	ug/kg	C U	410.000	ug/kg	C U	350.000	ug/kg	D U
1,3-Dichlorobenzene	500.000	ug/kg	C U	410.000	ug/kg	C U	350.000	ug/kg	D U
1,4-Dichlorobenzene	500.000	ug/kg	C U	410.000	ug/kg	C U	350.000	ug/kg	D U
2,4,5-Trichlorophenol	1200.000	ug/kg	C U	1000.000	ug/kg	C U	860.000	ug/kg	D U
2,4,6-Trichlorophenol	500.000	ug/kg	C U	410.000	ug/kg	C U	350.000	ug/kg	D U
2,4-Dichlorophenol	500.000	ug/kg	C U	410.000	ug/kg	C U	350.000	ug/kg	D U
2,4-Dimethylphenol	500.000	ug/kg	C U	410.000	ug/kg	C U	350.000	ug/kg	D U
2,4-Dinitrophenol	1200.000	ug/kg	C UJ	1000.000	ug/kg	C UJ	860.000	ug/kg	D UJ
2,4-Dinitrotoluene	500.000	ug/kg	C U	410.000	ug/kg	C U	350.000	ug/kg	D U
2,6-Dinitrotoluene	500.000	ug/kg	C U	410.000	ug/kg	C U	350.000	ug/kg	D U
2-Chloronaphthalene	500.000	ug/kg	C U	410.000	ug/kg	C U	350.000	ug/kg	D U
2-Chlorophenol	500.000	ug/kg	C U	410.000	ug/kg	C U	350.000	ug/kg	D U
2-Methylnaphthalene	500.000	ug/kg	C U	410.000	ug/kg	C U	350.000	ug/kg	D U
2-Methylphenol	500.000	ug/kg	C U	410.000	ug/kg	C U	350.000	ug/kg	D U
2-Nitroaniline	1200.000	ug/kg	C U	1000.000	ug/kg	C U	860.000	ug/kg	D U
2-Nitrophenol	500.000	ug/kg	C U	410.000	ug/kg	C U	350.000	ug/kg	D U
3,3'-Dichlorobenzidine	500.000	ug/kg	C U	410.000	ug/kg	C U	350.000	ug/kg	D U

0140

5174

TABLE E-6A
(Continued)

PHASE II - CHEMICAL PARAMETERS

BORING NUMBER	1994			1994			1994		
SAMPLE NUMBER	116283			116301			116312		
	14-15.5			26-27.5			36-37.5		
SAMPLING DATE	05/12/93			05/13/93			05/13/93		
CHEMICAL PARAMETERS	RESULTS	UNITS	L VQ	RESULTS	UNITS	L VQ	RESULTS	UNITS	L VQ
Semivolatile Organics									
3-Nitroaniline	1200.000	ug/kg	C U	1000.000	ug/kg	C U	860.000	ug/kg	D U
4,6-Dinitro-2-methylphenol	1200.000	ug/kg	C U	1000.000	ug/kg	C U	860.000	ug/kg	D U
4-Bromophenyl phenyl ether	500.000	ug/kg	C U	410.000	ug/kg	C U	350.000	ug/kg	D U
4-Chloro-3-methylphenol	500.000	ug/kg	C U	410.000	ug/kg	C U	350.000	ug/kg	D U
4-Chlorophenylphenyl ether	500.000	ug/kg	C U	410.000	ug/kg	C U	350.000	ug/kg	D U
4-Methylphenol	500.000	ug/kg	C U	410.000	ug/kg	C U	350.000	ug/kg	D U
4-Nitroaniline	1200.000	ug/kg	C U	1000.000	ug/kg	C U	860.000	ug/kg	D U
4-Nitrophenol	1200.000	ug/kg	C U	1000.000	ug/kg	C U	860.000	ug/kg	D U
Acenaphthene	500.000	ug/kg	C U	410.000	ug/kg	C U	350.000	ug/kg	D U
Acenaphthylene	500.000	ug/kg	C U	410.000	ug/kg	C U	350.000	ug/kg	D U
Anthracene	500.000	ug/kg	C U	410.000	ug/kg	C U	350.000	ug/kg	D U
Benzo(a)anthracene	500.000	ug/kg	C U	410.000	ug/kg	C U	350.000	ug/kg	D U
Benzo(a)pyrene	500.000	ug/kg	C U	410.000	ug/kg	C U	350.000	ug/kg	D U
Benzo(b)fluoranthene	500.000	ug/kg	C U	410.000	ug/kg	C U	350.000	ug/kg	D U
Benzo(g,h,i)perylene	500.000	ug/kg	C U	410.000	ug/kg	C U	350.000	ug/kg	D U
Benzo(k)fluoranthene	500.000	ug/kg	C U	410.000	ug/kg	C U	350.000	ug/kg	D U
Butyl benzyl phthalate	500.000	ug/kg	C U	41.000	ug/kg	C U	350.000	ug/kg	D U
Carbazole	500.000	ug/kg	C U	410.000	ug/kg	C U	350.000	ug/kg	D U
Chrysene	500.000	ug/kg	C U	410.000	ug/kg	C U	350.000	ug/kg	D U
Di-n-butyl phthalate	500.000	ug/kg	C U	410.000	ug/kg	C U	350.000	ug/kg	D U
Di-n-octyl phthalate	500.000	ug/kg	C U	410.000	ug/kg	C U	350.000	ug/kg	D U
Dibenzo(a,h)anthracene	500.000	ug/kg	C U	410.000	ug/kg	C U	350.000	ug/kg	D U
Dibenzofuran	500.000	ug/kg	C U	410.000	ug/kg	C U	350.000	ug/kg	D U
Diethyl phthalate	500.000	ug/kg	C U	410.000	ug/kg	C U	350.000	ug/kg	D U
Dimethyl phthalate	500.000	ug/kg	C U	410.000	ug/kg	C U	350.000	ug/kg	D U
Fluoranthene	500.000	ug/kg	C U	410.000	ug/kg	C U	350.000	ug/kg	D U
Fluorene	500.000	ug/kg	C U	410.000	ug/kg	C U	350.000	ug/kg	D U
Hexachlorobenzene	500.000	ug/kg	C U	410.000	ug/kg	C U	350.000	ug/kg	D U
Hexachlorobutadiene	500.000	ug/kg	C U	410.000	ug/kg	C U	350.000	ug/kg	D U
Hexachlorocyclopentadiene	500.000	ug/kg	C UJ	410.000	ug/kg	C UJ	350.000	ug/kg	D UJ
Hexachloroethane	500.000	ug/kg	C U	410.000	ug/kg	C U	350.000	ug/kg	D U
Indeno(1,2,3-cd)pyrene	500.000	ug/kg	C U	410.000	ug/kg	C U	350.000	ug/kg	D U
Isophorone	500.000	ug/kg	C U	410.000	ug/kg	C U	350.000	ug/kg	D U
N-Nitroso-di-n-propylamine	500.000	ug/kg	C U	410.000	ug/kg	C U	350.000	ug/kg	D U
N-Nitrosodiphenylamine	500.000	ug/kg	C U	410.000	ug/kg	C U	350.000	ug/kg	D U
Naphthalene	500.000	ug/kg	C U	410.000	ug/kg	C U	350.000	ug/kg	D U
Nitrobenzene	500.000	ug/kg	C U	410.000	ug/kg	C U	350.000	ug/kg	D U
Pentachlorophenol	1200.000	ug/kg	C U	1000.000	ug/kg	C U	860.000	ug/kg	D U
Phenanthrene	500.000	ug/kg	C U	410.000	ug/kg	C U	350.000	ug/kg	D U
Phenol	500.000	ug/kg	C U	410.000	ug/kg	C U	350.000	ug/kg	D U
Pyrene	500.000	ug/kg	C U	410.000	ug/kg	C U	350.000	ug/kg	D U
bis(2-Chloroethoxy)methane	500.000	ug/kg	C U	410.000	ug/kg	C U	350.000	ug/kg	D U

TABLE E-6A
(Continued)

PHASE II - CHEMICAL PARAMETERS

BORING NUMBER	1994					1994					1994				
SAMPLE NUMBER	116283					116301					116312				
	14-15.5					26-27.5					36-37.5				
SAMPLING DATE	05/12/93					05/13/93					05/13/93				
CHEMICAL PARAMETERS	RESULTS	UNITS	L	VQ		RESULTS	UNITS	L	VQ		RESULTS	UNITS	L	VQ	
Semivolatile Organics															
bis(2-Chloroethyl)ether	500.000	ug/kg	C	U		410.000	ug/kg	C	U		350.000	ug/kg	D	U	
bis(2-Chloroisopropyl) ether	500.000	ug/kg	C	U		410.000	ug/kg	C	U		350.000	ug/kg	D	U	
bis(2-Ethylhexyl) phthalate	860.000	ug/kg	C	-		990.000	ug/kg	C	-		48.000	ug/kg	D	J	
p-Chloroaniline	500.000	ug/kg	C	U		410.000	ug/kg	C	U		350.000	ug/kg	D	U	
Pesticide Organics/PCBs															
4,4'-DDD	4.900	ug/kg	C	UJ		4.100	ug/kg	C	U		3.500	ug/kg	D	U	
4,4'-DDE	4.900	ug/kg	C	UJ		4.100	ug/kg	C	U		3.500	ug/kg	D	U	
4,4'-DDT	4.900	ug/kg	C	UJ		4.100	ug/kg	C	U		3.500	ug/kg	D	U	
Aldrin	2.500	ug/kg	C	UJ		2.100	ug/kg	C	U		1.800	ug/kg	D	U	
Aroclor-1016	49.000	ug/kg	C	U		41.000	ug/kg	C	U		35.000	ug/kg	D	U	
Aroclor-1221	99.000	ug/kg	C	U		83.000	ug/kg	C	U		72.000	ug/kg	D	U	
Aroclor-1232	49.000	ug/kg	C	U		41.000	ug/kg	C	U		35.000	ug/kg	D	U	
Aroclor-1242	49.000	ug/kg	C	U		41.000	ug/kg	C	U		35.000	ug/kg	D	U	
Aroclor-1248	49.000	ug/kg	C	U		41.000	ug/kg	C	U		35.000	ug/kg	D	U	
Aroclor-1254	49.000	ug/kg	C	U		41.000	ug/kg	C	U		35.000	ug/kg	D	U	
Aroclor-1260	49.000	ug/kg	C	U		41.000	ug/kg	C	U		35.000	ug/kg	D	U	
Dieldrin	4.900	ug/kg	C	UJ		4.100	ug/kg	C	U		3.500	ug/kg	D	U	
Endosulfan II	4.900	ug/kg	C	UJ		4.100	ug/kg	C	U		3.500	ug/kg	D	U	
Endosulfan sulfate	4.900	ug/kg	C	UJ		4.100	ug/kg	C	U		3.500	ug/kg	D	U	
Endosulfan-I	2.500	ug/kg	C	UJ		2.100	ug/kg	C	U		1.800	ug/kg	D	U	
Endrin	4.900	ug/kg	C	UJ		4.100	ug/kg	C	U		3.500	ug/kg	D	U	
Endrin aldehyde	4.900	ug/kg	C	UJ		4.100	ug/kg	C	U		3.500	ug/kg	D	U	
Endrin ketone	4.900	ug/kg	C	UJ		4.100	ug/kg	C	U		3.500	ug/kg	D	U	
Heptachlor	2.500	ug/kg	C	UJ		2.100	ug/kg	C	U		1.800	ug/kg	D	U	
Heptachlor epoxide	2.500	ug/kg	C	UJ		2.100	ug/kg	C	U		1.800	ug/kg	D	U	
Methoxychlor	25.000	ug/kg	C	UJ		21.000	ug/kg	C	U		18.000	ug/kg	D	U	
Toxaphene	250.000	ug/kg	C	U		210.000	ug/kg	C	U		180.000	ug/kg	D	U	
alpha-BHC	2.500	ug/kg	C	UJ		2.100	ug/kg	C	U		1.800	ug/kg	D	U	
alpha-Chlordane	2.500	ug/kg	C	UJ		2.100	ug/kg	C	U		1.800	ug/kg	D	U	
beta-BHC	2.500	ug/kg	C	UJ		2.100	ug/kg	C	U		1.800	ug/kg	D	U	
delta-BHC	2.500	ug/kg	C	UJ		2.100	ug/kg	C	U		1.800	ug/kg	D	U	
gamma-BHC (Lindane)	2.500	ug/kg	C	UJ		2.100	ug/kg	C	U		1.800	ug/kg	D	U	
gamma-Chlordane	2.500	ug/kg	C	UJ		2.100	ug/kg	C	U		1.800	ug/kg	D	U	

0142

5174

TABLE E-6A
(Continued)

PHASE II - CHEMICAL PARAMETERS

BORING NUMBER	1995			1995			1995		
SAMPLE NUMBER	116080			116090			116392		
	2-3.5			8-9			8-9.5		
SAMPLING DATE	05/01/93			05/01/93			06/07/93		
CHEMICAL PARAMETERS	RESULTS	UNITS	L VQ	RESULTS	UNITS	L VQ	RESULTS	UNITS	L VQ
Inorganics									
Aluminum	8470.000	mg/kg	C -	7030.000	mg/kg	C -	NA		
Antimony	0.330	mg/kg	C R	1.000	mg/kg	C R	NA		
Arsenic	9.700	mg/kg	C J	81.800	mg/kg	C J	NA		
Barium	95.100	mg/kg	C -	357.000	mg/kg	C -	NA		
Beryllium	1.600	mg/kg	C -	8.700	mg/kg	C -	NA		
Cadmium	0.470	mg/kg	C -	0.480	mg/kg	C U	NA		
Calcium	97100.000	mg/kg	C -	4260.000	mg/kg	C -	NA		
Chromium	12.100	mg/kg	C -	7.900	mg/kg	C -	NA		
Cobalt	6.100	mg/kg	C -	10.600	mg/kg	C -	NA		
Copper	16.800	mg/kg	C -	41.200	mg/kg	C -	NA		
Cyanide	0.120	mg/kg	C U	0.250	mg/kg	C -	NA		
Iron	16100.000	mg/kg	C -	6180.000	mg/kg	C -	NA		
Lead	14.000	mg/kg	C J	11.500	mg/kg	C J	NA		
Magnesium	16000.000	mg/kg	C J	512.000	mg/kg	C J	NA		
Manganese	358.000	mg/kg	C -	23.100	mg/kg	C -	NA		
Mercury	0.110	mg/kg	C U	0.120	mg/kg	C U	NA		
Molybdenum	0.720	mg/kg	C -	8.000	mg/kg	C -	NA		
Nickel	14.800	mg/kg	C -	18.600	mg/kg	C -	NA		
Potassium	872.000	mg/kg	C J	1080.000	mg/kg	C J	NA		
Selenium	0.230	mg/kg	C UJ	4.100	mg/kg	C J	NA		
Silicon	778.000	mg/kg	C -	919.000	mg/kg	C -	NA		
Silver	0.470	mg/kg	C U	0.480	mg/kg	C U	NA		
Sodium	149.000	mg/kg	C J	497.000	mg/kg	C J	NA		
Thallium	0.230	mg/kg	C U	2.100	mg/kg	C -	NA		
Vanadium	26.500	mg/kg	C J	53.200	mg/kg	C J	NA		
Zinc	45.600	mg/kg	C -	18.700	mg/kg	C -	NA		
Volatile Organics									
1,1,1-Trichloroethane	32.000	ug/kg	C J	1600.000	ug/kg	C UJ	920.000	ug/kg	C J
1,1,2,2-Tetrachloroethane	11.000	ug/kg	C R	1600.000	ug/kg	C UJ	13.000	ug/kg	C R
1,1,2-Trichloroethane	11.000	ug/kg	C UJ	1600.000	ug/kg	C UJ	13.000	ug/kg	C R
1,1-Dichloroethane	11.000	ug/kg	C UJ	1600.000	ug/kg	C UJ	13.000	ug/kg	C U
1,1-Dichloroethene	11.000	ug/kg	C UJ	1600.000	ug/kg	C UJ	13.000	ug/kg	C U
1,2-Dichloroethane	11.000	ug/kg	C UJ	1600.000	ug/kg	C UJ	13.000	ug/kg	C U
1,2-Dichloroethene	11.000	ug/kg	C UJ	1600.000	ug/kg	C UJ	13.000	ug/kg	C U
1,2-Dichloropropane	11.000	ug/kg	C UJ	1600.000	ug/kg	C UJ	13.000	ug/kg	C R
2-Butanone	11.000	ug/kg	C UJ	1600.000	ug/kg	C UJ	13.000	ug/kg	C U
2-Hexanone	11.000	ug/kg	C R	1600.000	ug/kg	C UJ	13.000	ug/kg	C R
4-Methyl-2-pentanone	11.000	ug/kg	C R	1600.000	ug/kg	C UJ	13.000	ug/kg	C R
Acetone	11.000	ug/kg	C UJ	1600.000	ug/kg	C UJ	10.000	ug/kg	C J
Benzene	11.000	ug/kg	C UJ	1600.000	ug/kg	C UJ	13.000	ug/kg	C R

TABLE E-6A
(Continued)

PHASE II - CHEMICAL PARAMETERS

BORING NUMBER	1995			1995			1995		
SAMPLE NUMBER	116080			116090			116392		
	2-3.5			8-9			8-9.5		
SAMPLING DATE	05/01/93			05/01/93			06/07/93		
CHEMICAL PARAMETERS	RESULTS	UNITS	L VQ	RESULTS	UNITS	L VQ	RESULTS	UNITS	L VQ
Volatile Organics									
Bromodichloromethane	11.000	ug/kg	C UJ	1600.000	ug/kg	C UJ	13.000	ug/kg	C R
Bromoform	11.000	ug/kg	C UJ	1600.000	ug/kg	C UJ	13.000	ug/kg	C R
Bromomethane	11.000	ug/kg	C UJ	1600.000	ug/kg	C UJ	13.000	ug/kg	C U
Carbon Tetrachloride	11.000	ug/kg	C UJ	1600.000	ug/kg	C UJ	13.000	ug/kg	C R
Carbon disulfide	11.000	ug/kg	C UJ	1600.000	ug/kg	C UJ	13.000	ug/kg	C U
Chlorobenzene	11.000	ug/kg	C R	1600.000	ug/kg	C UJ	13.000	ug/kg	C R
Chloroethane	11.000	ug/kg	C UJ	1600.000	ug/kg	C UJ	13.000	ug/kg	C U
Chloroform	11.000	ug/kg	C UJ	1600.000	ug/kg	C UJ	13.000	ug/kg	C U
Chloromethane	11.000	ug/kg	C UJ	1600.000	ug/kg	C UJ	13.000	ug/kg	C UJ
Dibromochloromethane	11.000	ug/kg	C UJ	1600.000	ug/kg	C UJ	13.000	ug/kg	C R
Ethylbenzene	11.000	ug/kg	C R	1600.000	ug/kg	C UJ	13.000	ug/kg	C R
Methylene chloride	13.000	ug/kg	C UJ	180.000	ug/kg	C J	67.000	ug/kg	C J
Styrene	11.000	ug/kg	C R	1600.000	ug/kg	C UJ	13.000	ug/kg	C R
Tetrachloroethene	11.000	ug/kg	C R	1600.000	ug/kg	C UJ	13.000	ug/kg	C R
Toluene	14.000	ug/kg	C J	1800.000	ug/kg	C J	25.000	ug/kg	C J
Trichloroethene	11.000	ug/kg	C UJ	1600.000	ug/kg	C UJ	2.000	ug/kg	C J
Vinyl Acetate	11.000	ug/kg	C UJ	NA			13.000	ug/kg	C R
Vinyl chloride	11.000	ug/kg	C UJ	1600.000	ug/kg	C UJ	13.000	ug/kg	C U
Xylenes, Total	11.000	ug/kg	C R	1600.000	ug/kg	C UJ	13.000	ug/kg	C R
cis-1,3-Dichloropropene	11.000	ug/kg	C UJ	1600.000	ug/kg	C UJ	13.000	ug/kg	C R
trans-1,3-Dichloropropene	11.000	ug/kg	C UJ	1600.000	ug/kg	C UJ	13.000	ug/kg	C R
Semivolatile Organics									
1,2,4-Trichlorobenzene	370.000	ug/kg	C U	420.000	ug/kg	C U	NA		
1,2-Dichlorobenzene	370.000	ug/kg	C U	420.000	ug/kg	C U	NA		
1,3-Dichlorobenzene	370.000	ug/kg	C U	420.000	ug/kg	C U	NA		
1,4-Dichlorobenzene	370.000	ug/kg	C U	420.000	ug/kg	C U	NA		
2,4,5-Trichlorophenol	890.000	ug/kg	C U	1000.000	ug/kg	C U	NA		
2,4,6-Trichlorophenol	370.000	ug/kg	C U	420.000	ug/kg	C U	NA		
2,4-Dichlorophenol	370.000	ug/kg	C U	420.000	ug/kg	C U	NA		
2,4-Dimethylphenol	370.000	ug/kg	C U	420.000	ug/kg	C U	NA		
2,4-Dinitrophenol	890.000	ug/kg	C U	1000.000	ug/kg	C U	NA		
2,4-Dinitrotoluene	370.000	ug/kg	C U	420.000	ug/kg	C U	NA		
2,6-Dinitrotoluene	370.000	ug/kg	C U	420.000	ug/kg	C U	NA		
2-Chloronaphthalene	370.000	ug/kg	C U	420.000	ug/kg	C U	NA		
2-Chlorophenol	370.000	ug/kg	C U	420.000	ug/kg	C U	NA		
2-Methylnaphthalene	370.000	ug/kg	C U	420.000	ug/kg	C U	NA		
2-Methylphenol	370.000	ug/kg	C U	420.000	ug/kg	C U	NA		
2-Nitroaniline	890.000	ug/kg	C U	1000.000	ug/kg	C U	NA		
2-Nitrophenol	370.000	ug/kg	C U	420.000	ug/kg	C U	NA		
3,3'-Dichlorobenzidine	370.000	ug/kg	C U	420.000	ug/kg	C U	NA		

0144

5174

TABLE E-6A
(Continued)

PHASE II - CHEMICAL PARAMETERS

BORING NUMBER	1995	1995	1995
SAMPLE NUMBER	116080	116090	116392
	2-3.5	8-9	8-9.5
SAMPLING DATE	05/01/93	05/01/93	06/07/93

CHEMICAL PARAMETERS	RESULTS	UNITS	L	VQ	RESULTS	UNITS	L	VQ	RESULTS	UNITS	L	VQ
Semivolatile Organics												
3-Nitroaniline	890.000	ug/kg	C	U	1000.000	ug/kg	C	UJ	NA			
4,6-Dinitro-2-methylphenol	890.000	ug/kg	C	U	1000.000	ug/kg	C	U	NA			
4-Bromophenyl phenyl ether	370.000	ug/kg	C	U	420.000	ug/kg	C	U	NA			
4-Chloro-3-methylphenol	370.000	ug/kg	C	U	420.000	ug/kg	C	U	NA			
4-Chlorophenylphenyl ether	370.000	ug/kg	C	U	420.000	ug/kg	C	U	NA			
4-Methylphenol	370.000	ug/kg	C	U	420.000	ug/kg	C	U	NA			
4-Nitroaniline	890.000	ug/kg	C	U	1000.000	ug/kg	C	U	NA			
4-Nitrophenol	890.000	ug/kg	C	U	1000.000	ug/kg	C	U	NA			
Acenaphthene	370.000	ug/kg	C	U	420.000	ug/kg	C	U	NA			
Acenaphthylene	370.000	ug/kg	C	U	420.000	ug/kg	C	U	NA			
Anthracene	370.000	ug/kg	C	U	420.000	ug/kg	C	U	NA			
Benzo(a)anthracene	39.000	ug/kg	C	J	420.000	ug/kg	C	U	NA			
Benzo(a)pyrene	370.000	ug/kg	C	U	420.000	ug/kg	C	U	NA			
Benzo(b)fluoranthene	370.000	ug/kg	C	U	420.000	ug/kg	C	U	NA			
Benzo(g,h,i)perylene	370.000	ug/kg	C	U	420.000	ug/kg	C	U	NA			
Benzo(k)fluoranthene	43.000	ug/kg	C	J	420.000	ug/kg	C	U	NA			
Benzoic acid	1800.000	ug/kg	C	U	2100.000	ug/kg	C	U	NA			
Benzyl alcohol	370.000	ug/kg	C	U	430.000	ug/kg	C	U	NA			
Butyl benzyl phthalate	370.000	ug/kg	C	U	420.000	ug/kg	C	U	NA			
Carbazole	370.000	ug/kg	C	U	420.000	ug/kg	C	U	NA			
Chrysene	48.000	ug/kg	C	J	420.000	ug/kg	C	U	NA			
Di-n-butyl phthalate	370.000	ug/kg	C	U	420.000	ug/kg	C	U	NA			
Di-n-octyl phthalate	370.000	ug/kg	C	U	420.000	ug/kg	C	UJ	NA			
Dibenzo(a,h)anthracene	370.000	ug/kg	C	U	420.000	ug/kg	C	U	NA			
Dibenzofuran	370.000	ug/kg	C	U	420.000	ug/kg	C	U	NA			
Diethyl phthalate	370.000	ug/kg	C	U	420.000	ug/kg	C	U	NA			
Dimethyl phthalate	370.000	ug/kg	C	U	420.000	ug/kg	C	U	NA			
Fluoranthene	99.000	ug/kg	C	J	420.000	ug/kg	C	U	NA			
Fluorene	370.000	ug/kg	C	U	420.000	ug/kg	C	U	NA			
Hexachlorobenzene	370.000	ug/kg	C	U	420.000	ug/kg	C	U	NA			
Hexachlorobutadiene	370.000	ug/kg	C	U	420.000	ug/kg	C	U	NA			
Hexachlorocyclopentadiene	370.000	ug/kg	C	U	420.000	ug/kg	C	UJ	NA			
Hexachloroethane	370.000	ug/kg	C	U	420.000	ug/kg	C	U	NA			
Indeno(1,2,3-cd)pyrene	370.000	ug/kg	C	U	420.000	ug/kg	C	U	NA			
Isophorone	370.000	ug/kg	C	U	420.000	ug/kg	C	U	NA			
N-Nitroso-di-n-propylamine	370.000	ug/kg	C	U	420.000	ug/kg	C	U	NA			
N-Nitrosodiphenylamine	370.000	ug/kg	C	U	420.000	ug/kg	C	U	NA			
Naphthalene	370.000	ug/kg	C	U	420.000	ug/kg	C	U	NA			
Nitrobenzene	370.000	ug/kg	C	U	420.000	ug/kg	C	U	NA			
Pentachlorophenol	890.000	ug/kg	C	U	1000.000	ug/kg	C	U	NA			
Phenanthrene	56.000	ug/kg	C	J	420.000	ug/kg	C	U	NA			
Phenol	370.000	ug/kg	C	U	420.000	ug/kg	C	U	NA			

TABLE E-6A
(Continued)

PHASE II - CHEMICAL PARAMETERS

BORING NUMBER	1995			1995			1995		
SAMPLE NUMBER	116080			116090			116392		
	2-3.5			8-9			8-9.5		
SAMPLING DATE	05/01/93			05/01/93			06/07/93		
CHEMICAL PARAMETERS	RESULTS	UNITS	L VQ	RESULTS	UNITS	L VQ	RESULTS	UNITS	L VQ
Semivolatile Organics									
Pyrene	96.000	ug/kg	C J	420.000	ug/kg	C U	NA		
bis(2-Chloroethoxy)methane	370.000	ug/kg	C U	420.000	ug/kg	C U	NA		
bis(2-Chloroethyl)ether	370.000	ug/kg	C U	420.000	ug/kg	C U	NA		
bis(2-Chloroisopropyl) ether	370.000	ug/kg	C U	420.000	ug/kg	C UJ	NA		
bis(2-Ethylhexyl) phthalate	2600.000	ug/kg	C -	1600.000	ug/kg	C -	NA		
p-Chloroaniline	370.000	ug/kg	C U	420.000	ug/kg	C UJ	NA		
Pesticide Organics/PCBs									
4,4'-DDD	3.700	ug/kg	C UJ	4.200	ug/kg	C U	NA		
4,4'-DDE	3.700	ug/kg	C UJ	4.200	ug/kg	C U	NA		
4,4'-DDT	3.700	ug/kg	C UJ	4.200	ug/kg	C U	NA		
Aldrin	1.900	ug/kg	C UJ	2.200	ug/kg	C U	NA		
Aroclor-1016	37.000	ug/kg	C UJ	42.000	ug/kg	C U	NA		
Aroclor-1221	75.000	ug/kg	C UJ	86.000	ug/kg	C U	NA		
Aroclor-1232	37.000	ug/kg	C UJ	42.000	ug/kg	C U	NA		
Aroclor-1242	37.000	ug/kg	C UJ	42.000	ug/kg	C U	NA		
Aroclor-1248	37.000	ug/kg	C UJ	42.000	ug/kg	C U	NA		
Aroclor-1254	120.000	ug/kg	C J	42.000	ug/kg	C U	NA		
Aroclor-1260	37.000	ug/kg	C UJ	42.000	ug/kg	C U	NA		
Dieldrin	3.700	ug/kg	C UJ	4.200	ug/kg	C U	NA		
Endosulfan II	3.700	ug/kg	C UJ	4.200	ug/kg	C U	NA		
Endosulfan sulfate	3.700	ug/kg	C UJ	4.200	ug/kg	C U	NA		
Endosulfan-I	1.900	ug/kg	C UJ	2.200	ug/kg	C U	NA		
Endrin	3.700	ug/kg	C UJ	4.200	ug/kg	C U	NA		
Endrin aldehyde	3.700	ug/kg	C UJ	4.200	ug/kg	C U	NA		
Endrin ketone	3.700	ug/kg	C UJ	4.200	ug/kg	C U	NA		
Heptachlor	1.900	ug/kg	C UJ	2.200	ug/kg	C U	NA		
Heptachlor epoxide	1.900	ug/kg	C UJ	2.200	ug/kg	C U	NA		
Methoxychlor	19.000	ug/kg	C UJ	22.000	ug/kg	C U	NA		
Toxaphene	190.000	ug/kg	C UJ	220.000	ug/kg	C U	NA		
alpha-BHC	1.900	ug/kg	C UJ	2.200	ug/kg	C U	NA		
alpha-Chlordane	3.300	ug/kg	C J	2.200	ug/kg	C U	NA		
beta-BHC	1.900	ug/kg	C UJ	2.200	ug/kg	C U	NA		
delta-BHC	1.900	ug/kg	C UJ	2.200	ug/kg	C U	NA		
gamma-BHC (Lindane)	1.900	ug/kg	C UJ	2.200	ug/kg	C U	NA		
gamma-Chlordane	1.900	ug/kg	C UJ	2.200	ug/kg	C U	NA		

0146

5174

TABLE E-6A
(Continued)

PHASE II - CHEMICAL PARAMETERS

BORING NUMBER	1995			1996			1996		
SAMPLE NUMBER	116172			112077			112084		
	30-31.5			8-9.5			14-15		
SAMPLING DATE	05/02/93			04/29/93			04/29/93		
CHEMICAL PARAMETERS	RESULTS	UNITS	L VQ	RESULTS	UNITS	L VQ	RESULTS	UNITS	L VQ
Inorganics									
Aluminum	12200.000	mg/kg	C -	4980.000	mg/kg	C -	7130.000	mg/kg	C -
Antimony	0.250	mg/kg	C R	0.820	mg/kg	C UJ	0.940	mg/kg	C UJ
Arsenic	6.000	mg/kg	C J	14.500	mg/kg	C J	26.000	mg/kg	C J
Barium	90.900	mg/kg	C -	639.000	mg/kg	C J	727.000	mg/kg	C J
Beryllium	1.400	mg/kg	C -	3.300	mg/kg	C -	4.200	mg/kg	C -
Cadmium	1.100	mg/kg	C -	0.710	mg/kg	C -	0.680	mg/kg	C -
Calcium	9030.000	mg/kg	C -	3320.000	mg/kg	C J	16900.000	mg/kg	C J
Chromium	16.600	mg/kg	C -	7.300	mg/kg	C -	9.500	mg/kg	C -
Cobalt	10.400	mg/kg	C -	8.900	mg/kg	C -	11.300	mg/kg	C -
Copper	22.600	mg/kg	C -	39.600	mg/kg	C -	34.300	mg/kg	C -
Cyanide	0.120	mg/kg	C U	0.490	mg/kg	C J	0.710	mg/kg	C J
Iron	24800.000	mg/kg	C -	7840.000	mg/kg	C J	12100.000	mg/kg	C J
Lead	25.900	mg/kg	C J	9.100	mg/kg	C J	11.100	mg/kg	C J
Magnesium	3360.000	mg/kg	C J	597.000	mg/kg	C -	3020.000	mg/kg	C -
Manganese	1200.000	mg/kg	C -	89.200	mg/kg	C J	201.000	mg/kg	C J
Mercury	0.120	mg/kg	C U	0.130	mg/kg	C U	0.130	mg/kg	C U
Molybdenum	1.400	mg/kg	C -	4.700	mg/kg	C U	3.900	mg/kg	C U
Nickel	25.200	mg/kg	C -	15.900	mg/kg	C -	20.000	mg/kg	C -
Potassium	1310.000	mg/kg	C J	1070.000	mg/kg	C J	1220.000	mg/kg	C J
Selenium	0.240	mg/kg	C UJ	2.300	mg/kg	C J	1.900	mg/kg	C J
Silicon	1080.000	mg/kg	C -	617.000	mg/kg	C J	919.000	mg/kg	C J
Silver	0.490	mg/kg	C -	0.500	mg/kg	C U	0.540	mg/kg	C U
Sodium	166.000	mg/kg	C J	297.000	mg/kg	C -	382.000	mg/kg	C -
Thallium	0.240	mg/kg	C U	0.570	mg/kg	C -	0.730	mg/kg	C -
Vanadium	26.200	mg/kg	C J	27.400	mg/kg	C J	29.600	mg/kg	C J
Zinc	66.900	mg/kg	C -	12.900	mg/kg	C UJ	20.700	mg/kg	C J
Volatile Organics									
1,1,1-Trichloroethane	1.000	ug/kg	C J	67.000	ug/kg	C U	64.000	ug/kg	C UJ
1,1,2,2-Tetrachloroethane	12.000	ug/kg	C U	67.000	ug/kg	C U	64.000	ug/kg	C UJ
1,1,2-Trichloroethane	12.000	ug/kg	C U	67.000	ug/kg	C U	64.000	ug/kg	C UJ
1,1-Dichloroethane	12.000	ug/kg	C U	67.000	ug/kg	C U	64.000	ug/kg	C UJ
1,1-Dichloroethene	12.000	ug/kg	C U	67.000	ug/kg	C U	64.000	ug/kg	C UJ
1,2-Dichloroethane	12.000	ug/kg	C U	67.000	ug/kg	C U	64.000	ug/kg	C UJ
1,2-Dichloroethene	12.000	ug/kg	C U	67.000	ug/kg	C U	64.000	ug/kg	C UJ
1,2-Dichloropropane	12.000	ug/kg	C U	67.000	ug/kg	C U	64.000	ug/kg	C UJ
2-Butanone	12.000	ug/kg	C U	67.000	ug/kg	C U	64.000	ug/kg	C UJ
2-Hexanone	12.000	ug/kg	C U	67.000	ug/kg	C U	64.000	ug/kg	C UJ
4-Methyl-2-pentanone	12.000	ug/kg	C U	67.000	ug/kg	C U	64.000	ug/kg	C UJ
Acetone	15.000	ug/kg	C U	67.000	ug/kg	C U	64.000	ug/kg	C UJ
Benzene	12.000	ug/kg	C U	67.000	ug/kg	C U	64.000	ug/kg	C UJ

TABLE E-6A
(Continued)

PHASE II - CHEMICAL PARAMETERS

BORING NUMBER	1995			1996			1996		
SAMPLE NUMBER	116172			112077			112084		
	30-31.5			8-9.5			14-15		
SAMPLING DATE	05/02/93			04/29/93			04/29/93		
CHEMICAL PARAMETERS	RESULTS	UNITS	L VQ	RESULTS	UNITS	L VQ	RESULTS	UNITS	L VQ
Volatile Organics									
Bromodichloromethane	12.000	ug/kg	C U	67.000	ug/kg	C U	64.000	ug/kg	C UJ
Bromoform	12.000	ug/kg	C U	67.000	ug/kg	C U	64.000	ug/kg	C UJ
Bromomethane	12.000	ug/kg	C U	67.000	ug/kg	C U	64.000	ug/kg	C UJ
Carbon Tetrachloride	12.000	ug/kg	C U	67.000	ug/kg	C U	64.000	ug/kg	C UJ
Carbon disulfide	12.000	ug/kg	C U	67.000	ug/kg	C U	64.000	ug/kg	C UJ
Chlorobenzene	12.000	ug/kg	C U	67.000	ug/kg	C U	64.000	ug/kg	C UJ
Chloroethane	12.000	ug/kg	C UJ	67.000	ug/kg	C UJ	64.000	ug/kg	C UJ
Chloroform	12.000	ug/kg	C U	67.000	ug/kg	C U	64.000	ug/kg	C UJ
Chloromethane	12.000	ug/kg	C UJ	67.000	ug/kg	C U	64.000	ug/kg	C UJ
Dibromochloromethane	12.000	ug/kg	C U	67.000	ug/kg	C U	64.000	ug/kg	C UJ
Ethylbenzene	12.000	ug/kg	C U	67.000	ug/kg	C U	64.000	ug/kg	C UJ
Methylene chloride	12.000	ug/kg	C U	67.000	ug/kg	C U	64.000	ug/kg	C UJ
Styrene	12.000	ug/kg	C U	67.000	ug/kg	C U	64.000	ug/kg	C UJ
Tetrachloroethene	12.000	ug/kg	C U	67.000	ug/kg	C U	64.000	ug/kg	C UJ
Toluene	12.000	ug/kg	C U	180.000	ug/kg	C -	1000.000	ug/kg	C J
Trichloroethene	12.000	ug/kg	C U	67.000	ug/kg	C U	64.000	ug/kg	C UJ
Vinyl chloride	12.000	ug/kg	C UJ	67.000	ug/kg	C U	64.000	ug/kg	C UJ
Xylenes, Total	12.000	ug/kg	C U	67.000	ug/kg	C U	64.000	ug/kg	C UJ
cis-1,3-Dichloropropene	12.000	ug/kg	C U	67.000	ug/kg	C U	64.000	ug/kg	C UJ
trans-1,3-Dichloropropene	12.000	ug/kg	C U	67.000	ug/kg	C U	64.000	ug/kg	C UJ
Semivolatile Organics									
1,2,4-Trichlorobenzene	410.000	ug/kg	C U	430.000	ug/kg	C UJ	500.000	ug/kg	C UJ
1,2-Dichlorobenzene	410.000	ug/kg	C U	430.000	ug/kg	C U	500.000	ug/kg	C U
1,3-Dichlorobenzene	410.000	ug/kg	C U	430.000	ug/kg	C U	500.000	ug/kg	C U
1,4-Dichlorobenzene	410.000	ug/kg	C U	430.000	ug/kg	C U	500.000	ug/kg	C U
2,4,5-Trichlorophenol	1000.000	ug/kg	C U	1000.000	ug/kg	C U	1200.000	ug/kg	C U
2,4,6-Trichlorophenol	410.000	ug/kg	C U	430.000	ug/kg	C U	500.000	ug/kg	C U
2,4-Dichlorophenol	410.000	ug/kg	C U	430.000	ug/kg	C U	500.000	ug/kg	C U
2,4-Dimethylphenol	410.000	ug/kg	C U	430.000	ug/kg	C U	500.000	ug/kg	C U
2,4-Dinitrophenol	1000.000	ug/kg	C U	1000.000	ug/kg	C UJ	1200.000	ug/kg	C UJ
2,4-Dinitrotoluene	410.000	ug/kg	C U	430.000	ug/kg	C U	500.000	ug/kg	C U
2,6-Dinitrotoluene	410.000	ug/kg	C U	430.000	ug/kg	C U	500.000	ug/kg	C U
2-Chloronaphthalene	410.000	ug/kg	C U	430.000	ug/kg	C U	500.000	ug/kg	C U
2-Chlorophenol	410.000	ug/kg	C U	430.000	ug/kg	C U	500.000	ug/kg	C U
2-Methylnaphthalene	410.000	ug/kg	C U	74.000	ug/kg	C J	500.000	ug/kg	C U
2-Methylphenol	410.000	ug/kg	C U	430.000	ug/kg	C UJ	500.000	ug/kg	C UJ
2-Nitroaniline	1000.000	ug/kg	C U	1000.000	ug/kg	C U	1200.000	ug/kg	C U
2-Nitrophenol	410.000	ug/kg	C U	430.000	ug/kg	C U	500.000	ug/kg	C U
3,3'-Dichlorobenzidine	410.000	ug/kg	C U	430.000	ug/kg	C U	500.000	ug/kg	C U
3-Nitroaniline	1000.000	ug/kg	C UJ	1000.000	ug/kg	C UJ	1200.000	ug/kg	C UJ

0148

5174

TABLE E-6A
(Continued)

PHASE II - CHEMICAL PARAMETERS

BORING NUMBER	1995			1996			1996		
SAMPLE NUMBER	116172			112077			112084		
	30-31.5			8-9.5			14-15		
SAMPLING DATE	05/02/93			04/29/93			04/29/93		
CHEMICAL PARAMETERS	RESULTS	UNITS	L VQ	RESULTS	UNITS	L VQ	RESULTS	UNITS	L VQ
Semivolatile Organics									
4,6-Dinitro-2-methylphenol	1000.000	ug/kg	C U	1000.000	ug/kg	C U	1200.000	ug/kg	C U
4-Bromophenyl phenyl ether	410.000	ug/kg	C U	430.000	ug/kg	C U	500.000	ug/kg	C U
4-Chloro-3-methylphenol	410.000	ug/kg	C U	430.000	ug/kg	C U	500.000	ug/kg	C U
4-Chlorophenylphenyl ether	410.000	ug/kg	C U	430.000	ug/kg	C U	500.000	ug/kg	C U
4-Methylphenol	410.000	ug/kg	C U	430.000	ug/kg	C UJ	500.000	ug/kg	C UJ
4-Nitroaniline	1000.000	ug/kg	C U	1000.000	ug/kg	C R	1200.000	ug/kg	C R
4-Nitrophenol	1000.000	ug/kg	C U	1000.000	ug/kg	C U	1200.000	ug/kg	C U
Acenaphthene	410.000	ug/kg	C U	430.000	ug/kg	C U	500.000	ug/kg	C U
Acenaphthylene	410.000	ug/kg	C U	430.000	ug/kg	C U	500.000	ug/kg	C U
Anthracene	410.000	ug/kg	C U	430.000	ug/kg	C U	500.000	ug/kg	C U
Benzo(a)anthracene	410.000	ug/kg	C U	430.000	ug/kg	C U	500.000	ug/kg	C U
Benzo(a)pyrene	410.000	ug/kg	C U	430.000	ug/kg	C U	500.000	ug/kg	C U
Benzo(b)fluoranthene	410.000	ug/kg	C U	430.000	ug/kg	C U	500.000	ug/kg	C U
Benzo(g,h,i)perylene	410.000	ug/kg	C U	430.000	ug/kg	C U	500.000	ug/kg	C U
Benzo(k)fluoranthene	410.000	ug/kg	C U	430.000	ug/kg	C UJ	500.000	ug/kg	C UJ
Benzoic acid	2000.000	ug/kg	C U	2100.000	ug/kg	C U	2400.000	ug/kg	C U
Benzyl alcohol	410.000	ug/kg	C U	430.000	ug/kg	C U	500.000	ug/kg	C U
Butyl benzyl phthalate	410.000	ug/kg	C U	430.000	ug/kg	C U	500.000	ug/kg	C U
Carbazole	410.000	ug/kg	C U	430.000	ug/kg	C U	500.000	ug/kg	C U
Chrysene	410.000	ug/kg	C U	430.000	ug/kg	C U	500.000	ug/kg	C U
Di-n-butyl phthalate	410.000	ug/kg	C U	110.000	ug/kg	C J	500.000	ug/kg	C U
Di-n-octyl phthalate	410.000	ug/kg	C UJ	430.000	ug/kg	C U	500.000	ug/kg	C U
Dibenzo(a,h)anthracene	410.000	ug/kg	C U	430.000	ug/kg	C U	500.000	ug/kg	C U
Dibenzofuran	410.000	ug/kg	C U	430.000	ug/kg	C U	500.000	ug/kg	C U
Diethyl phthalate	180.000	ug/kg	C J	430.000	ug/kg	C UJ	500.000	ug/kg	C UJ
Dimethyl phthalate	410.000	ug/kg	C U	430.000	ug/kg	C U	500.000	ug/kg	C U
Fluoranthene	410.000	ug/kg	C U	430.000	ug/kg	C U	500.000	ug/kg	C U
Fluorene	410.000	ug/kg	C U	430.000	ug/kg	C U	500.000	ug/kg	C U
Hexachlorobenzene	410.000	ug/kg	C U	430.000	ug/kg	C U	500.000	ug/kg	C U
Hexachlorobutadiene	410.000	ug/kg	C U	430.000	ug/kg	C R	500.000	ug/kg	C R
Hexachlorocyclopentadiene	410.000	ug/kg	C UJ	430.000	ug/kg	C U	500.000	ug/kg	C U
Hexachloroethane	410.000	ug/kg	C U	430.000	ug/kg	C U	500.000	ug/kg	C U
Indeno(1,2,3-cd)pyrene	410.000	ug/kg	C U	430.000	ug/kg	C U	500.000	ug/kg	C U
Isophorone	410.000	ug/kg	C U	430.000	ug/kg	C U	500.000	ug/kg	C U
N-Nitroso-di-n-propylamine	410.000	ug/kg	C U	430.000	ug/kg	C U	500.000	ug/kg	C U
N-Nitrosodiphenylamine	410.000	ug/kg	C U	430.000	ug/kg	C U	500.000	ug/kg	C U
Naphthalene	410.000	ug/kg	C U	81.000	ug/kg	C J	500.000	ug/kg	C U
Nitrobenzene	410.000	ug/kg	C U	430.000	ug/kg	C U	500.000	ug/kg	C U
Pentachlorophenol	1000.000	ug/kg	C U	1000.000	ug/kg	C U	1200.000	ug/kg	C U
Phenanthrene	410.000	ug/kg	C U	60.000	ug/kg	C J	500.000	ug/kg	C U
Phenol	410.000	ug/kg	C U	430.000	ug/kg	C U	500.000	ug/kg	C U
Pyrene	410.000	ug/kg	C U	430.000	ug/kg	C U	500.000	ug/kg	C U

TABLE E-6A
(Continued)

PHASE II - CHEMICAL PARAMETERS

BORING NUMBER	1995			1996			1996		
SAMPLE NUMBER	116172			112077			112084		
	30-31.5			8-9.5			14-15		
SAMPLING DATE	05/02/93			04/29/93			04/29/93		
CHEMICAL PARAMETERS	RESULTS	UNITS	L VQ	RESULTS	UNITS	L VQ	RESULTS	UNITS	L VQ
Semivolatile Organics									
bis(2-Chloroethoxy)methane	410.000	ug/kg	C U	430.000	ug/kg	C U	500.000	ug/kg	C U
bis(2-Chloroethyl)ether	410.000	ug/kg	C U	430.000	ug/kg	C U	500.000	ug/kg	C U
bis(2-Chloroisopropyl) ether	410.000	ug/kg	C UJ	430.000	ug/kg	C UJ	500.000	ug/kg	C UJ
bis(2-Ethylhexyl) phthalate	58.000	ug/kg	C J	260.000	ug/kg	C J	2800.000	ug/kg	C -
p-Chloroaniline	410.000	ug/kg	C UJ	430.000	ug/kg	C U	500.000	ug/kg	C U
Pesticide Organics/PCBs									
4,4'-DDD	4.100	ug/kg	C U	4.300	ug/kg	C UJ	5.000	ug/kg	C U
4,4'-DDE	4.100	ug/kg	C U	4.300	ug/kg	C UJ	5.000	ug/kg	C U
4,4'-DDT	4.100	ug/kg	C U	4.300	ug/kg	C UJ	5.000	ug/kg	C U
Aldrin	2.100	ug/kg	C U	2.200	ug/kg	C UJ	2.600	ug/kg	C U
Aroclor-1016	41.000	ug/kg	C UJ	43.000	ug/kg	C U	50.000	ug/kg	C U
Aroclor-1221	83.000	ug/kg	C UJ	86.000	ug/kg	C U	100.000	ug/kg	C U
Aroclor-1232	41.000	ug/kg	C UJ	43.000	ug/kg	C U	50.000	ug/kg	C U
Aroclor-1242	41.000	ug/kg	C UJ	43.000	ug/kg	C U	50.000	ug/kg	C U
Aroclor-1248	41.000	ug/kg	C UJ	43.000	ug/kg	C U	50.000	ug/kg	C U
Aroclor-1254	41.000	ug/kg	C UJ	43.000	ug/kg	C U	50.000	ug/kg	C U
Aroclor-1260	41.000	ug/kg	C UJ	43.000	ug/kg	C U	50.000	ug/kg	C U
Dieldrin	4.100	ug/kg	C U	4.300	ug/kg	C UJ	5.000	ug/kg	C U
Endosulfan II	4.100	ug/kg	C U	4.300	ug/kg	C UJ	5.000	ug/kg	C U
Endosulfan sulfate	4.100	ug/kg	C U	4.300	ug/kg	C UJ	5.000	ug/kg	C U
Endosulfan-I	2.100	ug/kg	C U	2.200	ug/kg	C UJ	2.600	ug/kg	C U
Endrin	4.100	ug/kg	C U	4.300	ug/kg	C UJ	5.000	ug/kg	C U
Endrin aldehyde	4.100	ug/kg	C UJ	4.300	ug/kg	C U	5.000	ug/kg	C U
Endrin ketone	4.100	ug/kg	C U	4.300	ug/kg	C U	5.000	ug/kg	C U
Heptachlor	2.100	ug/kg	C U	2.200	ug/kg	C UJ	2.600	ug/kg	C U
Heptachlor epoxide	2.100	ug/kg	C U	2.200	ug/kg	C UJ	2.600	ug/kg	C U
Methoxychlor	21.000	ug/kg	C U	22.000	ug/kg	C UJ	26.000	ug/kg	C UJ
Toxaphene	210.000	ug/kg	C UJ	220.000	ug/kg	C U	260.000	ug/kg	C U
alpha-BHC	2.100	ug/kg	C U	2.200	ug/kg	C UJ	2.600	ug/kg	C U
alpha-Chlordane	2.100	ug/kg	C U	2.200	ug/kg	C U	2.600	ug/kg	C U
beta-BHC	2.100	ug/kg	C U	2.200	ug/kg	C UJ	2.600	ug/kg	C U
delta-BHC	2.100	ug/kg	C U	2.200	ug/kg	C UJ	2.600	ug/kg	C U
gamma-BHC (Lindane)	2.100	ug/kg	C U	2.200	ug/kg	C UJ	2.600	ug/kg	C U
gamma-Chlordane	2.100	ug/kg	C U	2.200	ug/kg	C U	2.600	ug/kg	C U

0150

5174

TABLE E-6A
(Continued)

PHASE II - CHEMICAL PARAMETERS

BORING NUMBER	1996	1996	1997
SAMPLE NUMBER	112087	116070	116177
	16-16.5	20-21.5	0-1.5
SAMPLING DATE	04/29/93	04/29/93	05/05/93

CHEMICAL PARAMETERS	RESULTS	UNITS	L	VQ	RESULTS	UNITS	L	VQ	RESULTS	UNITS	L	VQ
Inorganics												
Aluminum	NA				2260.000	mg/kg	C	-	12300.000	mg/kg	C	-
Antimony	NA				0.210	mg/kg	C	R	0.860	mg/kg	C	UJ
Arsenic	NA				4.800	mg/kg	C	J	4.700	mg/kg	C	-
Barium	NA				8.000	mg/kg	C	-	79.000	mg/kg	C	J
Beryllium	NA				0.930	mg/kg	C	-	0.890	mg/kg	C	-
Cadmium	NA				0.410	mg/kg	C	U	0.670	mg/kg	C	-
Calcium	NA				121000.000	mg/kg	C	-	6620.000	mg/kg	C	J
Chromium	NA				4.600	mg/kg	C	-	17.000	mg/kg	C	-
Cobalt	NA				4.200	mg/kg	C	-	7.100	mg/kg	C	-
Copper	NA				9.300	mg/kg	C	U	21.400	mg/kg	C	J
Cyanide	NA				0.110	mg/kg	C	U	0.120	mg/kg	C	U
Iron	NA				6640.000	mg/kg	C	-	20400.000	mg/kg	C	J
Lead	NA				5.400	mg/kg	C	J	16.500	mg/kg	C	J
Magnesium	NA				22300.000	mg/kg	C	J	4170.000	mg/kg	C	J
Manganese	NA				324.000	mg/kg	C	-	175.000	mg/kg	C	J
Mercury	NA				0.100	mg/kg	C	U	0.120	mg/kg	C	U
Molybdenum	NA				1.400	mg/kg	C	-	1.100	mg/kg	C	U
Nickel	NA				8.200	mg/kg	C	-	18.500	mg/kg	C	-
Potassium	NA				474.000	mg/kg	C	J	934.000	mg/kg	C	J
Selenium	NA				0.200	mg/kg	C	UJ	0.240	mg/kg	C	U
Silicon	NA				525.000	mg/kg	C	-	1030.000	mg/kg	C	-
Silver	NA				0.410	mg/kg	C	U	0.490	mg/kg	C	U
Sodium	NA				187.000	mg/kg	C	J	73.400	mg/kg	C	-
Thallium	NA				0.200	mg/kg	C	U	0.240	mg/kg	C	U
Vanadium	NA				11.300	mg/kg	C	J	26.900	mg/kg	C	J
Zinc	NA				23.600	mg/kg	C	-	63.700	mg/kg	C	J
Volatile Organics												
1,1,1-Trichloroethane	NA				13.000	ug/kg	C	UJ	12.000	ug/kg	C	U
1,1,2,2-Tetrachloroethane	NA				13.000	ug/kg	C	UJ	12.000	ug/kg	C	U
1,1,2-Trichloroethane	NA				13.000	ug/kg	C	UJ	12.000	ug/kg	C	U
1,1-Dichloroethane	NA				13.000	ug/kg	C	UJ	12.000	ug/kg	C	U
1,1-Dichloroethene	NA				13.000	ug/kg	C	UJ	12.000	ug/kg	C	U
1,2-Dichloroethane	NA				13.000	ug/kg	C	UJ	12.000	ug/kg	C	U
1,2-Dichloroethene	NA				13.000	ug/kg	C	UJ	12.000	ug/kg	C	U
1,2-Dichloropropane	NA				13.000	ug/kg	C	UJ	12.000	ug/kg	C	U
2-Butanone	NA				13.000	ug/kg	C	UJ	12.000	ug/kg	C	U
2-Hexanone	NA				13.000	ug/kg	C	UJ	12.000	ug/kg	C	U
4-Methyl-2-pentanone	NA				6.000	ug/kg	C	J	12.000	ug/kg	C	U
Acetone	NA				13.000	ug/kg	C	UJ	12.000	ug/kg	C	UJ
Benzene	NA				13.000	ug/kg	C	UJ	12.000	ug/kg	C	U

TABLE E-6A
(Continued)

PHASE II - CHEMICAL PARAMETERS

BORING NUMBER	1996				1996				1997			
SAMPLE NUMBER	112087				116070				116177			
	16-16.5				20-21.5				0-1.5			
SAMPLING DATE	04/29/93				04/29/93				05/05/93			
CHEMICAL PARAMETERS	RESULTS	UNITS	L	VQ	RESULTS	UNITS	L	VQ	RESULTS	UNITS	L	VQ
Volatile Organics												
Bromodichloromethane	NA				13.000	ug/kg	C	UJ	12.000	ug/kg	C	U
Bromoform	NA				13.000	ug/kg	C	UJ	12.000	ug/kg	C	U
Bromomethane	NA				13.000	ug/kg	C	UJ	12.000	ug/kg	C	U
Carbon Tetrachloride	NA				13.000	ug/kg	C	UJ	12.000	ug/kg	C	U
Carbon disulfide	NA				13.000	ug/kg	C	UJ	12.000	ug/kg	C	U
Chlorobenzene	NA				13.000	ug/kg	C	UJ	12.000	ug/kg	C	U
Chloroethane	NA				13.000	ug/kg	C	UJ	12.000	ug/kg	C	U
Chloroform	NA				13.000	ug/kg	C	UJ	12.000	ug/kg	C	U
Chloromethane	NA				13.000	ug/kg	C	UJ	12.000	ug/kg	C	UJ
Dibromochloromethane	NA				13.000	ug/kg	C	UJ	12.000	ug/kg	C	U
Ethylbenzene	NA				13.000	ug/kg	C	UJ	12.000	ug/kg	C	U
Methylene chloride	NA				13.000	ug/kg	C	UJ	13.000	ug/kg	C	U
Styrene	NA				13.000	ug/kg	C	UJ	12.000	ug/kg	C	U
Tetrachloroethene	NA				13.000	ug/kg	C	UJ	12.000	ug/kg	C	U
Toluene	NA				78.000	ug/kg	C	J	14.000	ug/kg	C	-
Trichloroethene	NA				13.000	ug/kg	C	UJ	12.000	ug/kg	C	U
Vinyl Acetate	NA				NA				12.000	ug/kg	C	U
Vinyl chloride	NA				13.000	ug/kg	C	UJ	12.000	ug/kg	C	U
Xylenes, Total	NA				13.000	ug/kg	C	UJ	12.000	ug/kg	C	U
cis-1,3-Dichloropropene	NA				13.000	ug/kg	C	UJ	12.000	ug/kg	C	U
trans-1,3-Dichloropropene	NA				13.000	ug/kg	C	UJ	12.000	ug/kg	C	UJ
Semivolatile Organics												
1,2,4-Trichlorobenzene	450.000	ug/kg	D	UJ	420.000	ug/kg	C	UJ	400.000	ug/kg	C	U
1,2-Dichlorobenzene	450.000	ug/kg	D	U	420.000	ug/kg	C	UJ	400.000	ug/kg	C	U
1,3-Dichlorobenzene	450.000	ug/kg	D	U	420.000	ug/kg	C	UJ	400.000	ug/kg	C	U
1,4-Dichlorobenzene	450.000	ug/kg	D	U	420.000	ug/kg	C	UJ	400.000	ug/kg	C	U
2,4,5-Trichlorophenol	1100.000	ug/kg	D	U	1000.000	ug/kg	C	UJ	970.000	ug/kg	C	U
2,4,6-Trichlorophenol	450.000	ug/kg	D	U	420.000	ug/kg	C	UJ	400.000	ug/kg	C	U
2,4-Dichlorophenol	450.000	ug/kg	D	U	420.000	ug/kg	C	UJ	400.000	ug/kg	C	U
2,4-Dimethylphenol	450.000	ug/kg	D	U	420.000	ug/kg	C	UJ	400.000	ug/kg	C	U
2,4-Dinitrophenol	1100.000	ug/kg	D	UJ	1000.000	ug/kg	C	UJ	970.000	ug/kg	C	UJ
2,4-Dinitrotoluene	450.000	ug/kg	D	U	420.000	ug/kg	C	UJ	400.000	ug/kg	C	U
2,6-Dinitrotoluene	450.000	ug/kg	D	U	420.000	ug/kg	C	UJ	400.000	ug/kg	C	U
2-Chloronaphthalene	450.000	ug/kg	D	U	420.000	ug/kg	C	UJ	400.000	ug/kg	C	U
2-Chlorophenol	450.000	ug/kg	D	U	420.000	ug/kg	C	UJ	400.000	ug/kg	C	U
2-Methylnaphthalene	450.000	ug/kg	D	U	420.000	ug/kg	C	UJ	400.000	ug/kg	C	U
2-Methylphenol	450.000	ug/kg	D	UJ	420.000	ug/kg	C	UJ	400.000	ug/kg	C	U
2-Nitroaniline	1100.000	ug/kg	D	U	1000.000	ug/kg	C	UJ	970.000	ug/kg	C	U
2-Nitrophenol	450.000	ug/kg	D	U	420.000	ug/kg	C	UJ	400.000	ug/kg	C	U
3,3'-Dichlorobenzidine	450.000	ug/kg	D	UJ	420.000	ug/kg	C	UJ	400.000	ug/kg	C	UJ

0152

5174

TABLE E-6A
(Continued)

PHASE II - CHEMICAL PARAMETERS

BORING NUMBER	1996			1996			1997		
SAMPLE NUMBER	112087			116070			116177		
	16-16.5			20-21.5			0-1.5		
SAMPLING DATE	04/29/93			04/29/93			05/05/93		
CHEMICAL PARAMETERS	RESULTS	UNITS	L VQ	RESULTS	UNITS	L VQ	RESULTS	UNITS	L VQ
Semivolatile Organics									
3-Nitroaniline	1100.000	ug/kg	D UJ	1000.000	ug/kg	C UJ	970.000	ug/kg	C UJ
4,6-Dinitro-2-methylphenol	1100.000	ug/kg	D U	1000.000	ug/kg	C UJ	970.000	ug/kg	C U
4-Bromophenyl phenyl ether	450.000	ug/kg	D U	420.000	ug/kg	C UJ	400.000	ug/kg	C U
4-Chloro-3-methylphenol	450.000	ug/kg	D U	420.000	ug/kg	C UJ	400.000	ug/kg	C U
4-Chlorophenylphenyl ether	450.000	ug/kg	D U	420.000	ug/kg	C UJ	400.000	ug/kg	C U
4-Methylphenol	450.000	ug/kg	D UJ	420.000	ug/kg	C UJ	400.000	ug/kg	C U
4-Nitroaniline	1100.000	ug/kg	D R	1000.000	ug/kg	C UJ	970.000	ug/kg	C UJ
4-Nitrophenol	1100.000	ug/kg	D U	1000.000	ug/kg	C UJ	970.000	ug/kg	C U
Acenaphthene	450.000	ug/kg	D U	420.000	ug/kg	C UJ	400.000	ug/kg	C U
Acenaphthylene	450.000	ug/kg	D U	420.000	ug/kg	C UJ	400.000	ug/kg	C U
Anthracene	450.000	ug/kg	D U	420.000	ug/kg	C UJ	400.000	ug/kg	C U
Benzo(a)anthracene	450.000	ug/kg	D U	420.000	ug/kg	C UJ	400.000	ug/kg	C U
Benzo(a)pyrene	450.000	ug/kg	D U	420.000	ug/kg	C UJ	400.000	ug/kg	C U
Benzo(b)fluoranthene	450.000	ug/kg	D U	420.000	ug/kg	C UJ	400.000	ug/kg	C U
Benzo(g,h,i)perylene	450.000	ug/kg	D U	420.000	ug/kg	C UJ	400.000	ug/kg	C U
Benzo(k)fluoranthene	450.000	ug/kg	D UJ	420.000	ug/kg	C UJ	400.000	ug/kg	C U
Benzoic acid	2200.000	ug/kg	D U	2000.000	ug/kg	C UJ	NA		
Benzyl alcohol	450.000	ug/kg	D U	420.000	ug/kg	C UJ	NA		
Butyl benzyl phthalate	450.000	ug/kg	D U	420.000	ug/kg	C UJ	400.000	ug/kg	C U
Carbazole	450.000	ug/kg	D U	420.000	ug/kg	C UJ	400.000	ug/kg	C U
Chrysene	450.000	ug/kg	D U	420.000	ug/kg	C UJ	400.000	ug/kg	C U
Di-n-butyl phthalate	450.000	ug/kg	D U	420.000	ug/kg	C UJ	400.000	ug/kg	C U
Di-n-octyl phthalate	450.000	ug/kg	D U	420.000	ug/kg	C UJ	400.000	ug/kg	C U
Dibenzo(a,h)anthracene	450.000	ug/kg	D U	420.000	ug/kg	C UJ	400.000	ug/kg	C U
Dibenzofuran	450.000	ug/kg	D U	420.000	ug/kg	C UJ	400.000	ug/kg	C U
Diethyl phthalate	450.000	ug/kg	D UJ	420.000	ug/kg	C UJ	400.000	ug/kg	C U
Dimethyl phthalate	450.000	ug/kg	D U	420.000	ug/kg	C UJ	400.000	ug/kg	C U
Fluoranthene	450.000	ug/kg	D U	420.000	ug/kg	C UJ	400.000	ug/kg	C U
Fluorene	450.000	ug/kg	D U	420.000	ug/kg	C UJ	400.000	ug/kg	C U
Hexachlorobenzene	450.000	ug/kg	D U	420.000	ug/kg	C UJ	400.000	ug/kg	C U
Hexachlorobutadiene	450.000	ug/kg	D R	420.000	ug/kg	C UJ	400.000	ug/kg	C U
Hexachlorocyclopentadiene	450.000	ug/kg	D U	420.000	ug/kg	C UJ	400.000	ug/kg	C U
Hexachloroethane	450.000	ug/kg	D U	420.000	ug/kg	C UJ	400.000	ug/kg	C U
Indeno(1,2,3-cd)pyrene	450.000	ug/kg	D U	420.000	ug/kg	C UJ	400.000	ug/kg	C U
Isophorone	450.000	ug/kg	D U	420.000	ug/kg	C UJ	400.000	ug/kg	C U
N-Nitroso-di-n-propylamine	450.000	ug/kg	D U	420.000	ug/kg	C UJ	400.000	ug/kg	C U
N-Nitrosodiphenylamine	450.000	ug/kg	D U	420.000	ug/kg	C UJ	400.000	ug/kg	C U
Naphthalene	450.000	ug/kg	D U	420.000	ug/kg	C UJ	400.000	ug/kg	C U
Nitrobenzene	450.000	ug/kg	D U	420.000	ug/kg	C UJ	400.000	ug/kg	C U
Pentachlorophenol	1100.000	ug/kg	D U	1000.000	ug/kg	C UJ	970.000	ug/kg	C U
Phenanthrene	450.000	ug/kg	D U	420.000	ug/kg	C UJ	400.000	ug/kg	C U
Phenol	450.000	ug/kg	D U	420.000	ug/kg	C UJ	400.000	ug/kg	C U

TABLE E-6A
(Continued)

PHASE II - CHEMICAL PARAMETERS

BORING NUMBER	1996			1996			1997		
SAMPLE NUMBER	112087			116070			116177		
	16-16.5			20-21.5			0-1.5		
SAMPLING DATE	04/29/93			04/29/93			05/05/93		
CHEMICAL PARAMETERS	RESULTS	UNITS	L VQ	RESULTS	UNITS	L VQ	RESULTS	UNITS	L VQ
Semivolatile Organics									
Pyrene	450.000	ug/kg	D U	420.000	ug/kg	C UJ	400.000	ug/kg	C U
bis(2-Chloroethoxy)methane	450.000	ug/kg	D U	420.000	ug/kg	C UJ	400.000	ug/kg	C U
bis(2-Chloroethyl)ether	450.000	ug/kg	D U	420.000	ug/kg	C UJ	400.000	ug/kg	C U
bis(2-Chloroisopropyl) ether	450.000	ug/kg	D UJ	420.000	ug/kg	C UJ	400.000	ug/kg	C U
bis(2-Ethylhexyl) phthalate	450.000	ug/kg	D U	130.000	ug/kg	C J	400.000	ug/kg	C U
p-Chloroaniline	450.000	ug/kg	D UJ	420.000	ug/kg	C UJ	400.000	ug/kg	C U
Pesticide Organics/PCBs									
4,4'-DDD	4.400	ug/kg	D U	4.200	ug/kg	C U	4.000	ug/kg	C UJ
4,4'-DDE	4.400	ug/kg	D U	4.200	ug/kg	C U	4.000	ug/kg	C UJ
4,4'-DDT	4.400	ug/kg	D U	4.200	ug/kg	C U	4.000	ug/kg	C UJ
Aldrin	2.300	ug/kg	D U	2.100	ug/kg	C U	2.100	ug/kg	C UJ
Aroclor-1016	44.000	ug/kg	D UJ	42.000	ug/kg	C UJ	40.000	ug/kg	C UJ
Aroclor-1221	90.000	ug/kg	D UJ	85.000	ug/kg	C UJ	81.000	ug/kg	C UJ
Aroclor-1232	44.000	ug/kg	D UJ	42.000	ug/kg	C UJ	40.000	ug/kg	C UJ
Aroclor-1242	44.000	ug/kg	D UJ	42.000	ug/kg	C UJ	40.000	ug/kg	C UJ
Aroclor-1248	44.000	ug/kg	D UJ	42.000	ug/kg	C UJ	40.000	ug/kg	C UJ
Aroclor-1254	44.000	ug/kg	D UJ	42.000	ug/kg	C UJ	40.000	ug/kg	C UJ
Aroclor-1260	44.000	ug/kg	D UJ	42.000	ug/kg	C UJ	40.000	ug/kg	C UJ
Dieldrin	4.400	ug/kg	D U	4.200	ug/kg	C U	4.000	ug/kg	C UJ
Endosulfan II	4.400	ug/kg	D U	4.200	ug/kg	C U	4.000	ug/kg	C UJ
Endosulfan sulfate	4.400	ug/kg	D U	4.200	ug/kg	C U	4.000	ug/kg	C UJ
Endosulfan-I	2.300	ug/kg	D U	2.100	ug/kg	C U	2.100	ug/kg	C UJ
Endrin	4.400	ug/kg	D U	4.200	ug/kg	C U	4.000	ug/kg	C UJ
Endrin aldehyde	4.400	ug/kg	D U	4.200	ug/kg	C U	4.000	ug/kg	C UJ
Endrin ketone	4.400	ug/kg	D U	4.200	ug/kg	C U	4.000	ug/kg	C UJ
Heptachlor	2.300	ug/kg	D U	2.100	ug/kg	C U	2.100	ug/kg	C UJ
Heptachlor epoxide	2.300	ug/kg	D U	2.100	ug/kg	C U	2.100	ug/kg	C UJ
Methoxychlor	23.000	ug/kg	D UJ	21.000	ug/kg	C U	21.000	ug/kg	C UJ
Toxaphene	230.000	ug/kg	D UJ	210.000	ug/kg	C UJ	210.000	ug/kg	C UJ
alpha-BHC	2.300	ug/kg	D U	2.100	ug/kg	C U	2.100	ug/kg	C UJ
alpha-Chlordane	2.300	ug/kg	D U	2.100	ug/kg	C U	2.100	ug/kg	C UJ
beta-BHC	2.300	ug/kg	D U	2.100	ug/kg	C U	2.100	ug/kg	C UJ
delta-BHC	2.300	ug/kg	D U	2.100	ug/kg	C U	2.100	ug/kg	C UJ
gamma-BHC (Lindane)	2.300	ug/kg	D U	2.100	ug/kg	C U	2.100	ug/kg	C UJ
gamma-Chlordane	2.300	ug/kg	D U	2.100	ug/kg	C U	2.100	ug/kg	C UJ

TABLE E-6A
(Continued)

PHASE II - CHEMICAL PARAMETERS

BORING NUMBER	1997			1997			1997		
SAMPLE NUMBER	116192			116243			116252		
	10-11.5			28.5-30			34-35.5		
SAMPLING DATE	05/05/93			05/06/93			05/07/93		
CHEMICAL PARAMETERS	RESULTS	UNITS	L VQ	RESULTS	UNITS	L VQ	RESULTS	UNITS	L VQ
Inorganics									
Aluminum	8360.000	mg/kg	C -	6160.000	mg/kg	C -	9620.000	mg/kg	C -
Antimony	1.000	mg/kg	C UJ	0.240	mg/kg	C UJ	0.410	mg/kg	C UJ
Arsenic	65.700	mg/kg	C -	4.200	mg/kg	C -	5.600	mg/kg	C -
Barium	1080.000	mg/kg	C J	56.200	mg/kg	C J	64.000	mg/kg	C J
Beryllium	5.400	mg/kg	C -	0.310	mg/kg	C -	0.840	mg/kg	C -
Cadmium	0.520	mg/kg	C U	0.510	mg/kg	C -	1.200	mg/kg	C -
Calcium	5870.000	mg/kg	C J	4700.000	mg/kg	C J	95900.000	mg/kg	C J
Chromium	10.400	mg/kg	C -	8.000	mg/kg	C -	11.400	mg/kg	C -
Cobalt	10.300	mg/kg	C -	9.300	mg/kg	C -	6.400	mg/kg	C -
Copper	38.600	mg/kg	C J	11.300	mg/kg	C J	14.700	mg/kg	C J
Cyanide	0.350	mg/kg	C -	0.120	mg/kg	C U	0.250	mg/kg	C J
Iron	8090.000	mg/kg	C J	11900.000	mg/kg	C J	17600.000	mg/kg	C J
Lead	11.100	mg/kg	C J	13.800	mg/kg	C J	8.900	mg/kg	C J
Magnesium	937.000	mg/kg	C J	2820.000	mg/kg	C J	26800.000	mg/kg	C J
Manganese	57.300	mg/kg	C J	538.000	mg/kg	C J	994.000	mg/kg	C J
Mercury	1.300	mg/kg	C -	0.120	mg/kg	C U	0.090	mg/kg	C UJ
Molybdenum	3.500	mg/kg	C U	1.400	mg/kg	C U	1.400	mg/kg	C U
Nickel	17.800	mg/kg	C -	9.400	mg/kg	C -	16.800	mg/kg	C -
Potassium	1500.000	mg/kg	C J	678.000	mg/kg	C J	1340.000	mg/kg	C J
Selenium	2.900	mg/kg	C -	0.240	mg/kg	C U	0.230	mg/kg	C UJ
Silicon	568.000	mg/kg	C -	982.000	mg/kg	C -	1000.000	mg/kg	C -
Silver	0.520	mg/kg	C U	0.480	mg/kg	C U	0.460	mg/kg	C U
Sodium	496.000	mg/kg	C -	91.300	mg/kg	C -	233.000	mg/kg	C -
Thallium	0.880	mg/kg	C -	0.240	mg/kg	C U	0.230	mg/kg	C U
Vanadium	31.700	mg/kg	C J	14.800	mg/kg	C J	24.700	mg/kg	C J
Zinc	11.900	mg/kg	C UJ	30.400	mg/kg	C J	45.400	mg/kg	C J
Volatile Organics									
1,1,1-Trichloroethane	83.000	ug/kg	C U	12.000	ug/kg	C U	12.000	ug/kg	C U
1,1,2,2-Tetrachloroethane	83.000	ug/kg	C U	12.000	ug/kg	C U	12.000	ug/kg	C U
1,1,2-Trichloroethane	83.000	ug/kg	C U	12.000	ug/kg	C U	12.000	ug/kg	C U
1,1-Dichloroethane	83.000	ug/kg	C U	12.000	ug/kg	C U	12.000	ug/kg	C U
1,1-Dichloroethene	83.000	ug/kg	C U	12.000	ug/kg	C U	12.000	ug/kg	C U
1,2-Dichloroethane	83.000	ug/kg	C U	12.000	ug/kg	C U	12.000	ug/kg	C U
1,2-Dichloroethene	83.000	ug/kg	C U	12.000	ug/kg	C U	12.000	ug/kg	C U
1,2-Dichloropropane	83.000	ug/kg	C U	12.000	ug/kg	C U	12.000	ug/kg	C U
2-Butanone	83.000	ug/kg	C U	12.000	ug/kg	C U	3.000	ug/kg	C J
2-Hexanone	83.000	ug/kg	C U	12.000	ug/kg	C U	12.000	ug/kg	C U
4-Methyl-2-pentanone	83.000	ug/kg	C U	12.000	ug/kg	C U	12.000	ug/kg	C U
Acetone	83.000	ug/kg	C UJ	11.000	ug/kg	C J	16.000	ug/kg	C -
Benzene	83.000	ug/kg	C U	12.000	ug/kg	C U	12.000	ug/kg	C U

TABLE E-6A
(Continued)

PHASE II - CHEMICAL PARAMETERS

BORING NUMBER	1997			1997			1997		
SAMPLE NUMBER	116192			116243			116252		
	10-11.5			28.5-30			34-35.5		
SAMPLING DATE	05/05/93			05/06/93			05/07/93		
CHEMICAL PARAMETERS	RESULTS	UNITS	L VQ	RESULTS	UNITS	L VQ	RESULTS	UNITS	L VQ
Volatile Organics									
Bromodichloromethane	83.000	ug/kg	C U	12.000	ug/kg	C U	12.000	ug/kg	C U
Bromoform	83.000	ug/kg	C U	12.000	ug/kg	C U	12.000	ug/kg	C U
Bromomethane	83.000	ug/kg	C U	12.000	ug/kg	C U	12.000	ug/kg	C U
Carbon Tetrachloride	83.000	ug/kg	C U	12.000	ug/kg	C U	12.000	ug/kg	C U
Carbon disulfide	83.000	ug/kg	C U	12.000	ug/kg	C U	12.000	ug/kg	C U
Chlorobenzene	14.000	ug/kg	C J	12.000	ug/kg	C U	12.000	ug/kg	C U
Chloroethane	83.000	ug/kg	C U	12.000	ug/kg	C U	12.000	ug/kg	C U
Chloroform	83.000	ug/kg	C U	12.000	ug/kg	C U	12.000	ug/kg	C U
Chloromethane	83.000	ug/kg	C UJ	12.000	ug/kg	C UJ	12.000	ug/kg	C U
Dibromochloromethane	83.000	ug/kg	C U	12.000	ug/kg	C U	12.000	ug/kg	C U
Ethylbenzene	83.000	ug/kg	C U	12.000	ug/kg	C U	12.000	ug/kg	C U
Methylene chloride	83.000	ug/kg	C U	12.000	ug/kg	C U	12.000	ug/kg	C U
Styrene	83.000	ug/kg	C U	12.000	ug/kg	C U	12.000	ug/kg	C U
Tetrachloroethene	83.000	ug/kg	C U	12.000	ug/kg	C U	12.000	ug/kg	C U
Toluene	370.000	ug/kg	C U	12.000	ug/kg	C U	12.000	ug/kg	C U
Trichloroethene	83.000	ug/kg	C U	12.000	ug/kg	C U	12.000	ug/kg	C U
Vinyl Acetate	83.000	ug/kg	C U	12.000	ug/kg	C U	12.000	ug/kg	C U
Vinyl chloride	83.000	ug/kg	C U	12.000	ug/kg	C U	12.000	ug/kg	C U
Xylenes, Total	83.000	ug/kg	C U	12.000	ug/kg	C U	12.000	ug/kg	C U
cis-1,3-Dichloropropene	83.000	ug/kg	C U	12.000	ug/kg	C U	12.000	ug/kg	C U
trans-1,3-Dichloropropene	83.000	ug/kg	C UJ	12.000	ug/kg	C UJ	12.000	ug/kg	C U
Semivolatile Organics									
1,2,4-Trichlorobenzene	440.000	ug/kg	C U	400.000	ug/kg	C U	380.000	ug/kg	C U
1,2-Dichlorobenzene	440.000	ug/kg	C U	400.000	ug/kg	C U	380.000	ug/kg	C U
1,3-Dichlorobenzene	440.000	ug/kg	C U	400.000	ug/kg	C U	380.000	ug/kg	C U
1,4-Dichlorobenzene	440.000	ug/kg	C U	400.000	ug/kg	C U	380.000	ug/kg	C U
2,4,5-Trichlorophenol	1100.000	ug/kg	C U	960.000	ug/kg	C U	920.000	ug/kg	C U
2,4,6-Trichlorophenol	440.000	ug/kg	C U	400.000	ug/kg	C U	380.000	ug/kg	C U
2,4-Dichlorophenol	440.000	ug/kg	C U	400.000	ug/kg	C U	380.000	ug/kg	C U
2,4-Dimethylphenol	440.000	ug/kg	C U	400.000	ug/kg	C U	380.000	ug/kg	C U
2,4-Dinitrophenol	1100.000	ug/kg	C UJ	960.000	ug/kg	C UJ	920.000	ug/kg	C UJ
2,4-Dinitrotoluene	440.000	ug/kg	C U	400.000	ug/kg	C U	380.000	ug/kg	C U
2,6-Dinitrotoluene	440.000	ug/kg	C U	400.000	ug/kg	C U	380.000	ug/kg	C U
2-Chloronaphthalene	440.000	ug/kg	C U	400.000	ug/kg	C U	380.000	ug/kg	C U
2-Chlorophenol	440.000	ug/kg	C U	400.000	ug/kg	C U	380.000	ug/kg	C U
2-Methylnaphthalene	440.000	ug/kg	C U	400.000	ug/kg	C U	380.000	ug/kg	C U
2-Methylphenol	440.000	ug/kg	C U	400.000	ug/kg	C U	380.000	ug/kg	C U
2-Nitroaniline	1100.000	ug/kg	C U	960.000	ug/kg	C U	920.000	ug/kg	C U
2-Nitrophenol	440.000	ug/kg	C U	400.000	ug/kg	C U	380.000	ug/kg	C U
3,3'-Dichlorobenzidine	440.000	ug/kg	C UJ	400.000	ug/kg	C UJ	380.000	ug/kg	C U

0156

5174

TABLE E-6A
(Continued)

PHASE II - CHEMICAL PARAMETERS

BORING NUMBER	1997			1997			1997		
SAMPLE NUMBER	116192			116243			116252		
	10-11.5			28.5-30			34-35.5		
SAMPLING DATE	05/05/93			05/06/93			05/07/93		
CHEMICAL PARAMETERS	RESULTS	UNITS	L VQ	RESULTS	UNITS	L VQ	RESULTS	UNITS	L VQ
Semivolatile Organics									
3-Nitroaniline	1100.000	ug/kg	C UJ	960.000	ug/kg	C UJ	920.000	ug/kg	C U
4,6-Dinitro-2-methylphenol	1100.000	ug/kg	C U	960.000	ug/kg	C U	920.000	ug/kg	C U
4-Bromophenyl phenyl ether	440.000	ug/kg	C U	400.000	ug/kg	C U	380.000	ug/kg	C U
4-Chloro-3-methylphenol	440.000	ug/kg	C U	400.000	ug/kg	C U	380.000	ug/kg	C U
4-Chlorophenylphenyl ether	440.000	ug/kg	C U	400.000	ug/kg	C U	380.000	ug/kg	C U
4-Methylphenol	440.000	ug/kg	C U	400.000	ug/kg	C U	380.000	ug/kg	C U
4-Nitroaniline	1100.000	ug/kg	C UJ	960.000	ug/kg	C UJ	920.000	ug/kg	C UJ
4-Nitrophenol	1100.000	ug/kg	C U	960.000	ug/kg	C U	920.000	ug/kg	C U
Acenaphthene	440.000	ug/kg	C U	400.000	ug/kg	C U	380.000	ug/kg	C U
Acenaphthylene	440.000	ug/kg	C U	400.000	ug/kg	C U	380.000	ug/kg	C U
Anthracene	440.000	ug/kg	C U	400.000	ug/kg	C U	380.000	ug/kg	C U
Benzo(a)anthracene	440.000	ug/kg	C U	400.000	ug/kg	C U	380.000	ug/kg	C U
Benzo(a)pyrene	440.000	ug/kg	C U	400.000	ug/kg	C U	380.000	ug/kg	C U
Benzo(b)fluoranthene	440.000	ug/kg	C U	400.000	ug/kg	C U	380.000	ug/kg	C U
Benzo(g,h,i)perylene	440.000	ug/kg	C U	400.000	ug/kg	C U	380.000	ug/kg	C U
Benzo(k)fluoranthene	440.000	ug/kg	C U	400.000	ug/kg	C U	380.000	ug/kg	C U
Butyl benzyl phthalate	440.000	ug/kg	C U	400.000	ug/kg	C U	380.000	ug/kg	C U
Carbazole	440.000	ug/kg	C U	400.000	ug/kg	C U	380.000	ug/kg	C U
Chrysene	440.000	ug/kg	C U	400.000	ug/kg	C U	380.000	ug/kg	C U
Di-n-butyl phthalate	440.000	ug/kg	C U	400.000	ug/kg	C U	380.000	ug/kg	C U
Di-n-octyl phthalate	440.000	ug/kg	C U	400.000	ug/kg	C U	380.000	ug/kg	C U
Dibenzo(a,h)anthracene	440.000	ug/kg	C U	400.000	ug/kg	C U	380.000	ug/kg	C U
Dibenzofuran	440.000	ug/kg	C U	400.000	ug/kg	C U	380.000	ug/kg	C U
Diethyl phthalate	52.000	ug/kg	C J	400.000	ug/kg	C U	380.000	ug/kg	C U
Dimethyl phthalate	440.000	ug/kg	C U	400.000	ug/kg	C U	380.000	ug/kg	C U
Fluoranthene	440.000	ug/kg	C U	400.000	ug/kg	C U	380.000	ug/kg	C U
Fluorene	440.000	ug/kg	C U	400.000	ug/kg	C U	380.000	ug/kg	C U
Hexachlorobenzene	440.000	ug/kg	C U	400.000	ug/kg	C U	380.000	ug/kg	C U
Hexachlorobutadiene	440.000	ug/kg	C U	400.000	ug/kg	C U	380.000	ug/kg	C U
Hexachlorocyclopentadiene	440.000	ug/kg	C U	400.000	ug/kg	C U	380.000	ug/kg	C U
Hexachloroethane	440.000	ug/kg	C U	400.000	ug/kg	C U	380.000	ug/kg	C U
Indeno(1,2,3-cd)pyrene	440.000	ug/kg	C U	400.000	ug/kg	C U	380.000	ug/kg	C U
Isophorone	440.000	ug/kg	C U	400.000	ug/kg	C U	380.000	ug/kg	C U
N-Nitroso-di-n-propylamine	440.000	ug/kg	C U	400.000	ug/kg	C U	380.000	ug/kg	C UJ
N-Nitrosodiphenylamine	440.000	ug/kg	C U	400.000	ug/kg	C U	380.000	ug/kg	C U
Naphthalene	440.000	ug/kg	C U	400.000	ug/kg	C U	380.000	ug/kg	C U
Nitrobenzene	440.000	ug/kg	C U	400.000	ug/kg	C U	380.000	ug/kg	C U
Pentachlorophenol	1100.000	ug/kg	C U	960.000	ug/kg	C U	920.000	ug/kg	C U
Phenanthrene	440.000	ug/kg	C U	400.000	ug/kg	C U	380.000	ug/kg	C U
Phenol	440.000	ug/kg	C U	400.000	ug/kg	C U	380.000	ug/kg	C U
Pyrene	440.000	ug/kg	C U	400.000	ug/kg	C U	380.000	ug/kg	C U
bis(2-Chloroethoxy)methane	440.000	ug/kg	C U	400.000	ug/kg	C U	380.000	ug/kg	C U

TABLE E-6A
(Continued)

PHASE II - CHEMICAL PARAMETERS

BORING NUMBER	1997			1997			1997		
SAMPLE NUMBER	116192			116243			116252		
	10-11.5			28.5-30			34-35.5		
SAMPLING DATE	05/05/93			05/06/93			05/07/93		
CHEMICAL PARAMETERS	RESULTS	UNITS	L VQ	RESULTS	UNITS	L VQ	RESULTS	UNITS	L VQ
Semivolatile Organics									
bis(2-Chloroethyl)ether	440.000	ug/kg	C U	400.000	ug/kg	C U	380.000	ug/kg	C U
bis(2-Chloroisopropyl) ether	440.000	ug/kg	C U	400.000	ug/kg	C U	380.000	ug/kg	C U
bis(2-Ethylhexyl) phthalate	440.000	ug/kg	C U	400.000	ug/kg	C U	380.000	ug/kg	C U
p-Chloroaniline	440.000	ug/kg	C U	400.000	ug/kg	C U	380.000	ug/kg	C U
Pesticide Organics/PCBs									
4,4'-DDD	4.400	ug/kg	C UJ	4.000	ug/kg	C UJ	3.800	ug/kg	C UJ
4,4'-DDE	4.400	ug/kg	C UJ	4.000	ug/kg	C UJ	3.800	ug/kg	C UJ
4,4'-DDT	4.400	ug/kg	C UJ	4.000	ug/kg	C UJ	3.800	ug/kg	C UJ
Aldrin	2.300	ug/kg	C UJ	2.000	ug/kg	C UJ	2.000	ug/kg	C UJ
Aroclor-1016	44.000	ug/kg	C UJ	40.000	ug/kg	C UJ	38.000	ug/kg	C UJ
Aroclor-1221	89.000	ug/kg	C UJ	80.000	ug/kg	C UJ	78.000	ug/kg	C UJ
Aroclor-1232	44.000	ug/kg	C UJ	40.000	ug/kg	C UJ	38.000	ug/kg	C UJ
Aroclor-1242	44.000	ug/kg	C UJ	40.000	ug/kg	C UJ	38.000	ug/kg	C UJ
Aroclor-1248	44.000	ug/kg	C UJ	40.000	ug/kg	C UJ	38.000	ug/kg	C UJ
Aroclor-1254	44.000	ug/kg	C UJ	40.000	ug/kg	C UJ	38.000	ug/kg	C UJ
Aroclor-1260	44.000	ug/kg	C UJ	40.000	ug/kg	C UJ	38.000	ug/kg	C UJ
Dieldrin	4.400	ug/kg	C UJ	4.000	ug/kg	C UJ	3.800	ug/kg	C UJ
Endosulfan II	4.400	ug/kg	C UJ	4.000	ug/kg	C UJ	3.800	ug/kg	C UJ
Endosulfan sulfate	4.400	ug/kg	C UJ	4.000	ug/kg	C UJ	3.800	ug/kg	C UJ
Endosulfan-I	2.300	ug/kg	C UJ	2.000	ug/kg	C UJ	2.000	ug/kg	C UJ
Endrin	4.400	ug/kg	C UJ	4.000	ug/kg	C UJ	3.800	ug/kg	C UJ
Endrin aldehyde	4.400	ug/kg	C UJ	4.000	ug/kg	C UJ	3.800	ug/kg	C UJ
Endrin ketone	4.400	ug/kg	C UJ	4.000	ug/kg	C UJ	3.800	ug/kg	C UJ
Heptachlor	2.300	ug/kg	C UJ	2.000	ug/kg	C UJ	2.000	ug/kg	C UJ
Heptachlor epoxide	2.300	ug/kg	C UJ	2.000	ug/kg	C UJ	2.000	ug/kg	C UJ
Methoxychlor	23.000	ug/kg	C UJ	20.000	ug/kg	C UJ	20.000	ug/kg	C UJ
Toxaphene	230.000	ug/kg	C UJ	200.000	ug/kg	C UJ	200.000	ug/kg	C UJ
alpha-BHC	2.300	ug/kg	C UJ	2.000	ug/kg	C UJ	2.000	ug/kg	C UJ
alpha-Chlordane	2.300	ug/kg	C UJ	2.000	ug/kg	C UJ	2.000	ug/kg	C UJ
beta-BHC	2.300	ug/kg	C UJ	2.000	ug/kg	C UJ	2.000	ug/kg	C UJ
delta-BHC	2.300	ug/kg	C UJ	2.000	ug/kg	C UJ	2.000	ug/kg	C UJ
gamma-BHC (Lindane)	2.300	ug/kg	C UJ	2.000	ug/kg	C UJ	2.000	ug/kg	C UJ
gamma-Chlordane	2.300	ug/kg	C UJ	2.000	ug/kg	C UJ	2.000	ug/kg	C UJ

0158

5174

TABLE E-6A
(Continued)

PHASE II - CHEMICAL PARAMETERS

BORING NUMBER	1997			1998			1998		
SAMPLE NUMBER	116257			112045			112054		
	38-39			2-3.5			8-9.5		
SAMPLING DATE	05/07/93			04/28/93			04/28/93		
CHEMICAL PARAMETERS	RESULTS	UNITS	L VQ	RESULTS	UNITS	L VQ	RESULTS	UNITS	L VQ
Inorganics									
Aluminum	3530.000	mg/kg	D -	6440.000	mg/kg	C -	11400.000	mg/kg	C -
Antimony	0.330	mg/kg	D UJ	0.910	mg/kg	C R	0.250	mg/kg	C R
Arsenic	5.100	mg/kg	D -	65.400	mg/kg	C J	10.900	mg/kg	C J
Barium	21.600	mg/kg	D J	621.000	mg/kg	C -	77.000	mg/kg	C -
Beryllium	0.400	mg/kg	D -	6.900	mg/kg	C -	1.700	mg/kg	C -
Cadmium	0.440	mg/kg	D U	0.760	mg/kg	C U	0.960	mg/kg	C -
Calcium	99800.000	mg/kg	D J	3170.000	mg/kg	C -	2990.000	mg/kg	C -
Chromium	8.200	mg/kg	D -	12.500	mg/kg	C -	16.600	mg/kg	C -
Cobalt	3.300	mg/kg	D -	10.000	mg/kg	C -	12.100	mg/kg	C -
Copper	11.300	mg/kg	D J	35.800	mg/kg	C -	23.000	mg/kg	C -
Cyanide	0.440	mg/kg	D R	0.550	mg/kg	C -	0.130	mg/kg	C U
Iron	10100.000	mg/kg	D J	11900.000	mg/kg	C -	29800.000	mg/kg	C -
Lead	5.400	mg/kg	D J	17.700	mg/kg	C J	13.700	mg/kg	C J
Magnesium	48100.000	mg/kg	D J	626.000	mg/kg	C J	2810.000	mg/kg	C J
Manganese	374.000	mg/kg	D J	79.400	mg/kg	C -	351.000	mg/kg	C -
Mercury	0.100	mg/kg	D UJ	0.190	mg/kg	C U	0.120	mg/kg	C U
Molybdenum	2.300	mg/kg	D U	5.700	mg/kg	C -	2.800	mg/kg	C -
Nickel	10.600	mg/kg	D -	16.900	mg/kg	C -	23.500	mg/kg	C -
Potassium	509.000	mg/kg	D J	694.000	mg/kg	C J	906.000	mg/kg	C J
Selenium	0.220	mg/kg	D UJ	5.400	mg/kg	C J	0.250	mg/kg	C UJ
Silicon	637.000	mg/kg	D J	892.000	mg/kg	C -	904.000	mg/kg	C -
Silver	0.440	mg/kg	D U	0.760	mg/kg	C -	0.500	mg/kg	C -
Sodium	175.000	mg/kg	D -	222.000	mg/kg	C J	76.300	mg/kg	C J
Thallium	0.220	mg/kg	D U	3.600	mg/kg	C -	0.250	mg/kg	C -
Vanadium	14.000	mg/kg	D J	49.100	mg/kg	C J	28.800	mg/kg	C J
Zinc	28.100	mg/kg	D J	19.600	mg/kg	C -	59.000	mg/kg	C -
Volatile Organics									
1,1,1-Trichloroethane	11.000	ug/kg	D U	16.000	ug/kg	C J	3.000	ug/kg	C J
1,1,2,2-Tetrachloroethane	11.000	ug/kg	D U	77.000	ug/kg	C UJ	12.000	ug/kg	C U
1,1,2-Trichloroethane	11.000	ug/kg	D U	77.000	ug/kg	C UJ	12.000	ug/kg	C U
1,1-Dichloroethane	11.000	ug/kg	D U	77.000	ug/kg	C UJ	12.000	ug/kg	C U
1,1-Dichloroethene	11.000	ug/kg	D U	77.000	ug/kg	C UJ	12.000	ug/kg	C U
1,2-Dichloroethane	11.000	ug/kg	D U	77.000	ug/kg	C UJ	12.000	ug/kg	C U
1,2-Dichloroethene	11.000	ug/kg	D U	77.000	ug/kg	C UJ	12.000	ug/kg	C U
1,2-Dichloropropane	11.000	ug/kg	D U	77.000	ug/kg	C UJ	12.000	ug/kg	C U
2-Butanone	11.000	ug/kg	D U	77.000	ug/kg	C UJ	12.000	ug/kg	C U
2-Hexanone	11.000	ug/kg	D U	77.000	ug/kg	C UJ	12.000	ug/kg	C U
4-Methyl-2-pentanone	11.000	ug/kg	D U	77.000	ug/kg	C UJ	12.000	ug/kg	C U
Acetone	11.000	ug/kg	D U	77.000	ug/kg	C UJ	12.000	ug/kg	C U
Benzene	11.000	ug/kg	D U	77.000	ug/kg	C UJ	12.000	ug/kg	C U

TABLE E-6A
(Continued)

PHASE II - CHEMICAL PARAMETERS

BORING NUMBER	1997			1998			1998		
SAMPLE NUMBER	116257			112045			112054		
	38-39			2-3.5			8-9.5		
SAMPLING DATE	05/07/93			04/28/93			04/28/93		
CHEMICAL PARAMETERS	RESULTS	UNITS	L VQ	RESULTS	UNITS	L VQ	RESULTS	UNITS	L VQ
Volatile Organics									
Bromodichloromethane	11.000	ug/kg	D U	77.000	ug/kg	C UJ	12.000	ug/kg	C U
Bromoform	11.000	ug/kg	D U	77.000	ug/kg	C UJ	12.000	ug/kg	C U
Bromomethane	11.000	ug/kg	D U	77.000	ug/kg	C UJ	12.000	ug/kg	C U
Carbon Tetrachloride	11.000	ug/kg	D U	77.000	ug/kg	C UJ	12.000	ug/kg	C U
Carbon disulfide	11.000	ug/kg	D U	77.000	ug/kg	C UJ	12.000	ug/kg	C U
Chlorobenzene	11.000	ug/kg	D U	77.000	ug/kg	C UJ	12.000	ug/kg	C U
Chloroethane	11.000	ug/kg	D U	77.000	ug/kg	C UJ	12.000	ug/kg	C U
Chloroform	11.000	ug/kg	D U	77.000	ug/kg	C UJ	12.000	ug/kg	C U
Chloromethane	11.000	ug/kg	D U	77.000	ug/kg	C UJ	12.000	ug/kg	C U
Dibromochloromethane	11.000	ug/kg	D U	77.000	ug/kg	C UJ	12.000	ug/kg	C U
Ethylbenzene	11.000	ug/kg	D U	77.000	ug/kg	C UJ	12.000	ug/kg	C U
Methylene chloride	11.000	ug/kg	D U	77.000	ug/kg	C UJ	12.000	ug/kg	C U
Styrene	11.000	ug/kg	D U	77.000	ug/kg	C UJ	12.000	ug/kg	C U
Tetrachloroethene	11.000	ug/kg	D U	77.000	ug/kg	C UJ	12.000	ug/kg	C U
Toluene	16.000	ug/kg	D -	150.000	ug/kg	C J	12.000	ug/kg	C U
Trichloroethene	11.000	ug/kg	D U	77.000	ug/kg	C UJ	12.000	ug/kg	C U
Vinyl Acetate	11.000	ug/kg	D U	NA			12.000	ug/kg	C U
Vinyl chloride	11.000	ug/kg	D U	77.000	ug/kg	C UJ	12.000	ug/kg	C U
Xylenes, Total	11.000	ug/kg	D U	77.000	ug/kg	C UJ	12.000	ug/kg	C U
cis-1,3-Dichloropropene	11.000	ug/kg	D U	77.000	ug/kg	C UJ	12.000	ug/kg	C U
trans-1,3-Dichloropropene	11.000	ug/kg	D U	77.000	ug/kg	C UJ	12.000	ug/kg	C UJ
Semivolatile Organics									
1,2,4-Trichlorobenzene	340.000	ug/kg	D U	500.000	ug/kg	C UJ	390.000	ug/kg	C UJ
1,2-Dichlorobenzene	340.000	ug/kg	D U	500.000	ug/kg	C UJ	390.000	ug/kg	C UJ
1,3-Dichlorobenzene	340.000	ug/kg	D U	500.000	ug/kg	C UJ	390.000	ug/kg	C UJ
1,4-Dichlorobenzene	340.000	ug/kg	D U	500.000	ug/kg	C UJ	390.000	ug/kg	C UJ
2,4,5-Trichlorophenol	840.000	ug/kg	D U	1200.000	ug/kg	C UJ	960.000	ug/kg	C UJ
2,4,6-Trichlorophenol	340.000	ug/kg	D U	500.000	ug/kg	C UJ	390.000	ug/kg	C UJ
2,4-Dichlorophenol	340.000	ug/kg	D U	500.000	ug/kg	C UJ	390.000	ug/kg	C UJ
2,4-Dimethylphenol	340.000	ug/kg	D U	500.000	ug/kg	C UJ	390.000	ug/kg	C UJ
2,4-Dinitrophenol	840.000	ug/kg	D UJ	1200.000	ug/kg	C UJ	960.000	ug/kg	C UJ
2,4-Dinitrotoluene	340.000	ug/kg	D U	500.000	ug/kg	C UJ	390.000	ug/kg	C UJ
2,6-Dinitrotoluene	340.000	ug/kg	D U	500.000	ug/kg	C UJ	390.000	ug/kg	C UJ
2-Chloronaphthalene	340.000	ug/kg	D U	500.000	ug/kg	C UJ	390.000	ug/kg	C UJ
2-Chlorophenol	340.000	ug/kg	D U	500.000	ug/kg	C UJ	390.000	ug/kg	C UJ
2-Methylnaphthalene	340.000	ug/kg	D U	500.000	ug/kg	C UJ	390.000	ug/kg	C UJ
2-Methylphenol	340.000	ug/kg	D U	500.000	ug/kg	C UJ	390.000	ug/kg	C UJ
2-Nitroaniline	840.000	ug/kg	D U	1200.000	ug/kg	C UJ	960.000	ug/kg	C UJ
2-Nitrophenol	340.000	ug/kg	D U	500.000	ug/kg	C UJ	390.000	ug/kg	C UJ
3,3'-Dichlorobenzidine	340.000	ug/kg	D U	500.000	ug/kg	C UJ	390.000	ug/kg	C UJ

TABLE E-6A
(Continued)

PHASE II - CHEMICAL PARAMETERS

BORING NUMBER	1997			1998			1998		
SAMPLE NUMBER	116257			112045			112054		
	38-39			2-3.5			8-9.5		
SAMPLING DATE	05/07/93			04/28/93			04/28/93		
CHEMICAL PARAMETERS	RESULTS	UNITS	L VQ	RESULTS	UNITS	L VQ	RESULTS	UNITS	L VQ
Semivolatile Organics									
3-Nitroaniline	840.000	ug/kg	D U	1200.000	ug/kg	C UJ	960.000	ug/kg	C UJ
4,6-Dinitro-2-methylphenol	840.000	ug/kg	D U	1200.000	ug/kg	C UJ	960.000	ug/kg	C UJ
4-Bromophenyl phenyl ether	340.000	ug/kg	D U	500.000	ug/kg	C UJ	390.000	ug/kg	C UJ
4-Chloro-3-methylphenol	340.000	ug/kg	D U	500.000	ug/kg	C UJ	390.000	ug/kg	C UJ
4-Chlorophenylphenyl ether	340.000	ug/kg	D U	500.000	ug/kg	C UJ	390.000	ug/kg	C UJ
4-Methylphenol	340.000	ug/kg	D U	500.000	ug/kg	C UJ	390.000	ug/kg	C UJ
4-Nitroaniline	840.000	ug/kg	D UJ	1200.000	ug/kg	C UJ	960.000	ug/kg	C UJ
4-Nitrophenol	840.000	ug/kg	D U	1200.000	ug/kg	C UJ	960.000	ug/kg	C UJ
Acenaphthene	340.000	ug/kg	D U	500.000	ug/kg	C UJ	390.000	ug/kg	C UJ
Acenaphthylene	340.000	ug/kg	D U	500.000	ug/kg	C UJ	390.000	ug/kg	C UJ
Anthracene	340.000	ug/kg	D U	500.000	ug/kg	C UJ	390.000	ug/kg	C UJ
Benzo(a)anthracene	340.000	ug/kg	D U	500.000	ug/kg	C UJ	390.000	ug/kg	C UJ
Benzo(a)pyrene	340.000	ug/kg	D U	500.000	ug/kg	C UJ	390.000	ug/kg	C UJ
Benzo(b)fluoranthene	340.000	ug/kg	D U	500.000	ug/kg	C UJ	390.000	ug/kg	C UJ
Benzo(g,h,i)perylene	340.000	ug/kg	D U	500.000	ug/kg	C UJ	390.000	ug/kg	C UJ
Benzo(k)fluoranthene	340.000	ug/kg	D U	500.000	ug/kg	C UJ	390.000	ug/kg	C UJ
Benzoic acid	NA			2400.000	ug/kg	C UJ	1900.000	ug/kg	C UJ
Benzyl alcohol	NA			500.000	ug/kg	C UJ	390.000	ug/kg	C UJ
Butyl benzyl phthalate	340.000	ug/kg	D U	500.000	ug/kg	C UJ	390.000	ug/kg	C UJ
Carbazole	340.000	ug/kg	D U	500.000	ug/kg	C UJ	390.000	ug/kg	C UJ
Chrysene	340.000	ug/kg	D U	500.000	ug/kg	C UJ	390.000	ug/kg	C UJ
Di-n-butyl phthalate	340.000	ug/kg	D U	500.000	ug/kg	C UJ	390.000	ug/kg	C UJ
Di-n-octyl phthalate	340.000	ug/kg	D U	500.000	ug/kg	C UJ	390.000	ug/kg	C UJ
Dibenzo(a,h)anthracene	340.000	ug/kg	D U	500.000	ug/kg	C UJ	390.000	ug/kg	C UJ
Dibenzofuran	340.000	ug/kg	D U	500.000	ug/kg	C UJ	390.000	ug/kg	C UJ
Diethyl phthalate	340.000	ug/kg	D U	500.000	ug/kg	C UJ	390.000	ug/kg	C UJ
Dimethyl phthalate	340.000	ug/kg	D U	500.000	ug/kg	C UJ	390.000	ug/kg	C UJ
Fluoranthene	340.000	ug/kg	D U	500.000	ug/kg	C UJ	390.000	ug/kg	C UJ
Fluorene	340.000	ug/kg	D U	500.000	ug/kg	C UJ	390.000	ug/kg	C UJ
Hexachlorobenzene	340.000	ug/kg	D U	500.000	ug/kg	C UJ	390.000	ug/kg	C UJ
Hexachlorobutadiene	340.000	ug/kg	D U	500.000	ug/kg	C UJ	390.000	ug/kg	C UJ
Hexachlorocyclopentadiene	340.000	ug/kg	D U	500.000	ug/kg	C UJ	390.000	ug/kg	C UJ
Hexachloroethane	340.000	ug/kg	D U	500.000	ug/kg	C UJ	390.000	ug/kg	C UJ
Indeno(1,2,3-cd)pyrene	340.000	ug/kg	D U	500.000	ug/kg	C UJ	390.000	ug/kg	C UJ
Isophorone	340.000	ug/kg	D U	500.000	ug/kg	C UJ	390.000	ug/kg	C UJ
N-Nitroso-di-n-propylamine	340.000	ug/kg	D UJ	500.000	ug/kg	C UJ	390.000	ug/kg	C UJ
N-Nitrosodiphenylamine	340.000	ug/kg	D U	500.000	ug/kg	C UJ	390.000	ug/kg	C UJ
Naphthalene	340.000	ug/kg	D U	500.000	ug/kg	C UJ	390.000	ug/kg	C UJ
Nitrobenzene	340.000	ug/kg	D U	500.000	ug/kg	C UJ	390.000	ug/kg	C UJ
Pentachlorophenol	840.000	ug/kg	D U	1200.000	ug/kg	C UJ	960.000	ug/kg	C UJ
Phenanthrene	340.000	ug/kg	D U	500.000	ug/kg	C UJ	390.000	ug/kg	C UJ
Phenol	340.000	ug/kg	D U	500.000	ug/kg	C UJ	390.000	ug/kg	C UJ

TABLE E-6A
(Continued)

PHASE II - CHEMICAL PARAMETERS

BORING NUMBER	1997			1998			1998		
SAMPLE NUMBER	116257			112045			112054		
	38-39			2-3.5			8-9.5		
SAMPLING DATE	05/07/93			04/28/93			04/28/93		
CHEMICAL PARAMETERS	RESULTS	UNITS	L VQ	RESULTS	UNITS	L VQ	RESULTS	UNITS	L VQ
Semivolatile Organics									
Pyrene	340.000	ug/kg	D U	500.000	ug/kg	C UJ	390.000	ug/kg	C UJ
bis(2-Chloroethoxy)methane	340.000	ug/kg	D U	500.000	ug/kg	C UJ	390.000	ug/kg	C UJ
bis(2-Chloroethyl)ether	340.000	ug/kg	D U	500.000	ug/kg	C UJ	390.000	ug/kg	C UJ
bis(2-Chloroisopropyl) ether	340.000	ug/kg	D U	500.000	ug/kg	C UJ	390.000	ug/kg	C UJ
bis(2-Ethylhexyl) phthalate	340.000	ug/kg	D U	150.000	ug/kg	C J	87.000	ug/kg	C J
p-Chloroaniline	340.000	ug/kg	D U	500.000	ug/kg	C UJ	390.000	ug/kg	C UJ
Pesticide Organics/PCBs									
4,4'-DDD	3.500	ug/kg	D U	5.100	ug/kg	C U	3.900	ug/kg	C U
4,4'-DDE	3.500	ug/kg	D UJ	5.100	ug/kg	C U	3.900	ug/kg	C U
4,4'-DDT	3.500	ug/kg	D U	5.100	ug/kg	C U	3.900	ug/kg	C U
Aldrin	1.800	ug/kg	D U	2.600	ug/kg	C U	2.000	ug/kg	C U
Aroclor-1016	35.000	ug/kg	D UJ	51.000	ug/kg	C U	39.000	ug/kg	C UJ
Aroclor-1221	70.000	ug/kg	D UJ	100.000	ug/kg	C U	80.000	ug/kg	C UJ
Aroclor-1232	35.000	ug/kg	D UJ	51.000	ug/kg	C U	39.000	ug/kg	C UJ
Aroclor-1242	35.000	ug/kg	D UJ	51.000	ug/kg	C U	39.000	ug/kg	C UJ
Aroclor-1248	35.000	ug/kg	D UJ	51.000	ug/kg	C U	39.000	ug/kg	C UJ
Aroclor-1254	35.000	ug/kg	D UJ	51.000	ug/kg	C U	39.000	ug/kg	C UJ
Aroclor-1260	35.000	ug/kg	D UJ	51.000	ug/kg	C U	39.000	ug/kg	C UJ
Dieldrin	3.500	ug/kg	D U	5.100	ug/kg	C U	3.900	ug/kg	C U
Endosulfan II	3.500	ug/kg	D U	5.100	ug/kg	C U	3.900	ug/kg	C U
Endosulfan sulfate	3.500	ug/kg	D U	5.100	ug/kg	C U	3.900	ug/kg	C U
Endosulfan-I	1.800	ug/kg	D U	2.600	ug/kg	C U	2.000	ug/kg	C U
Endrin	3.500	ug/kg	D U	5.100	ug/kg	C U	3.900	ug/kg	C U
Endrin aldehyde	3.500	ug/kg	D U	5.100	ug/kg	C U	3.900	ug/kg	C U
Endrin ketone	3.500	ug/kg	D U	5.100	ug/kg	C U	3.900	ug/kg	C U
Heptachlor	1.800	ug/kg	D U	2.600	ug/kg	C U	2.000	ug/kg	C U
Heptachlor epoxide	1.800	ug/kg	D U	2.600	ug/kg	C U	2.000	ug/kg	C U
Methoxychlor	18.000	ug/kg	D U	26.000	ug/kg	C U	20.000	ug/kg	C U
Toxaphene	180.000	ug/kg	D UJ	260.000	ug/kg	C U	200.000	ug/kg	C UJ
alpha-BHC	1.800	ug/kg	D U	2.600	ug/kg	C U	2.000	ug/kg	C U
alpha-Chlordane	1.800	ug/kg	D U	2.600	ug/kg	C U	2.000	ug/kg	C U
beta-BHC	1.800	ug/kg	D U	2.600	ug/kg	C U	2.000	ug/kg	C U
delta-BHC	1.800	ug/kg	D UJ	2.600	ug/kg	C U	2.000	ug/kg	C U
gamma-BHC (Lindane)	1.800	ug/kg	D U	2.600	ug/kg	C U	2.000	ug/kg	C U
gamma-Chlordane	1.800	ug/kg	D U	2.600	ug/kg	C U	2.000	ug/kg	C U

0162

5174

TABLE E-6A
(Continued)

PHASE II - CHEMICAL PARAMETERS

BORING NUMBER	1998				1998		
SAMPLE NUMBER	112057				112065		
	10-11.5				17-18.5		
SAMPLING DATE	04/28/93				04/28/93		
CHEMICAL PARAMETERS	RESULTS	UNITS	L	VQ	RESULTS	UNITS	L VQ
Inorganics							
Aluminum	3020.000	mg/kg	D	-	7340.000	mg/kg	C -
Antimony	0.240	mg/kg	D	R	0.220	mg/kg	C R
Arsenic	5.000	mg/kg	D	J	3.700	mg/kg	C J
Barium	38.300	mg/kg	D	-	50:900	mg/kg	C -
Beryllium	1.500	mg/kg	D	-	1.300	mg/kg	C -
Cadmium	0.500	mg/kg	D	-	1.200	mg/kg	C -
Calcium	219000.000	mg/kg	D	J	95400.000	mg/kg	C -
Chromium	6.400	mg/kg	D	-	11.000	mg/kg	C -
Cobalt	3.400	mg/kg	D	-	8.200	mg/kg	C -
Copper	8.600	mg/kg	D	-	16.400	mg/kg	C -
Cyanide	0.120	mg/kg	D	U	0.110	mg/kg	C U
Iron	8750.000	mg/kg	D	-	17000.000	mg/kg	C -
Lead	7.000	mg/kg	D	J	18.300	mg/kg	C J
Magnesium	51400.000	mg/kg	D	-	27500.000	mg/kg	C J
Manganese	379.000	mg/kg	D	-	436.000	mg/kg	C -
Mercury	0.110	mg/kg	D	U	0.100	mg/kg	C U
Molybdenum	1.600	mg/kg	D	-	1.400	mg/kg	C -
Nickel	8.100	mg/kg	D	-	18.900	mg/kg	C -
Potassium	678.000	mg/kg	D	J	1440.000	mg/kg	C J
Selenium	0.240	mg/kg	D	UJ	0.220	mg/kg	C UJ
Silicon	526.000	mg/kg	D	-	577.000	mg/kg	C -
Silver	0.490	mg/kg	D	U	0.430	mg/kg	C U
Sodium	203.000	mg/kg	D	J	190.000	mg/kg	C J
Thallium	0.240	mg/kg	D	U	0.220	mg/kg	C U
Vanadium	15.600	mg/kg	D	J	17.700	mg/kg	C J
Zinc	26.200	mg/kg	D	-	39.400	mg/kg	C -
Volatile Organics							
1,1,1-Trichloroethane	13.000	ug/kg	D	UJ	11.000	ug/kg	C U
1,1,2,2-Tetrachloroethane	13.000	ug/kg	D	UJ	11.000	ug/kg	C U
1,1,2-Trichloroethane	13.000	ug/kg	D	UJ	11.000	ug/kg	C U
1,1-Dichloroethane	13.000	ug/kg	D	UJ	11.000	ug/kg	C U
1,1-Dichloroethene	13.000	ug/kg	D	UJ	11.000	ug/kg	C U
1,2-Dichloroethane	13.000	ug/kg	D	UJ	11.000	ug/kg	C U
1,2-Dichloroethene	13.000	ug/kg	D	UJ	11.000	ug/kg	C U
1,2-Dichloropropane	13.000	ug/kg	D	UJ	11.000	ug/kg	C U
2-Butanone	13.000	ug/kg	D	UJ	11.000	ug/kg	C U
2-Hexanone	13.000	ug/kg	D	UJ	11.000	ug/kg	C U
4-Methyl-2-pentanone	13.000	ug/kg	D	UJ	11.000	ug/kg	C U
Acetone	15.000	ug/kg	D	UJ	11.000	ug/kg	C U
Benzene	13.000	ug/kg	D	UJ	11.000	ug/kg	C U

TABLE E-6A
(Continued)

PHASE II - CHEMICAL PARAMETERS

BORING NUMBER	1998				1998		
SAMPLE NUMBER	112057				112065		
	10-11.5				17-18.5		
SAMPLING DATE	04/28/93				04/28/93		
CHEMICAL PARAMETERS	RESULTS	UNITS	L	VQ	RESULTS	UNITS	L VQ
Volatile Organics							
Bromodichloromethane	13.000	ug/kg	D	UJ	11.000	ug/kg	C U
Bromoform	13.000	ug/kg	D	UJ	11.000	ug/kg	C U
Bromomethane	13.000	ug/kg	D	U	11.000	ug/kg	C U
Carbon Tetrachloride	13.000	ug/kg	D	UJ	11.000	ug/kg	C U
Carbon disulfide	13.000	ug/kg	D	UJ	11.000	ug/kg	C U
Chlorobenzene	13.000	ug/kg	D	UJ	11.000	ug/kg	C U
Chloroethane	13.000	ug/kg	D	UJ	11.000	ug/kg	C U
Chloroform	13.000	ug/kg	D	UJ	11.000	ug/kg	C U
Chloromethane	13.000	ug/kg	D	UJ	11.000	ug/kg	C U
Dibromochloromethane	13.000	ug/kg	D	UJ	11.000	ug/kg	C U
Ethylbenzene	13.000	ug/kg	D	UJ	11.000	ug/kg	C U
Methylene chloride	13.000	ug/kg	D	UJ	11.000	ug/kg	C U
Styrene	13.000	ug/kg	D	UJ	11.000	ug/kg	C U
Tetrachloroethene	13.000	ug/kg	D	UJ	11.000	ug/kg	C U
Toluene	13.000	ug/kg	D	UJ	59.000	ug/kg	C -
Trichloroethene	13.000	ug/kg	D	UJ	11.000	ug/kg	C U
Vinyl Acetate	NA				11.000	ug/kg	C U
Vinyl chloride	13.000	ug/kg	D	UJ	11.000	ug/kg	C U
Xylenes, Total	13.000	ug/kg	D	UJ	11.000	ug/kg	C U
cis-1,3-Dichloropropene	13.000	ug/kg	D	UJ	11.000	ug/kg	C U
trans-1,3-Dichloropropene	13.000	ug/kg	D	UJ	11.000	ug/kg	C UJ
Semivolatile Organics							
1,2,4-Trichlorobenzene	420.000	ug/kg	D	UJ	360.000	ug/kg	C UJ
1,2-Dichlorobenzene	420.000	ug/kg	D	UJ	360.000	ug/kg	C UJ
1,3-Dichlorobenzene	420.000	ug/kg	D	UJ	360.000	ug/kg	C UJ
1,4-Dichlorobenzene	420.000	ug/kg	D	UJ	360.000	ug/kg	C UJ
2,4,5-Trichlorophenol	1000.000	ug/kg	D	UJ	870.000	ug/kg	C UJ
2,4,6-Trichlorophenol	420.000	ug/kg	D	UJ	360.000	ug/kg	C UJ
2,4-Dichlorophenol	420.000	ug/kg	D	UJ	360.000	ug/kg	C UJ
2,4-Dimethylphenol	420.000	ug/kg	D	UJ	360.000	ug/kg	C UJ
2,4-Dinitrophenol	1000.000	ug/kg	D	UJ	870.000	ug/kg	C UJ
2,4-Dinitrotoluene	420.000	ug/kg	D	UJ	360.000	ug/kg	C UJ
2,6-Dinitrotoluene	420.000	ug/kg	D	UJ	360.000	ug/kg	C UJ
2-Chloronaphthalene	420.000	ug/kg	D	UJ	360.000	ug/kg	C UJ
2-Chlorophenol	420.000	ug/kg	D	UJ	360.000	ug/kg	C UJ
2-Methylnaphthalene	420.000	ug/kg	D	UJ	360.000	ug/kg	C UJ
2-Methylphenol	420.000	ug/kg	D	UJ	360.000	ug/kg	C UJ
2-Nitroaniline	1000.000	ug/kg	D	UJ	870.000	ug/kg	C UJ
2-Nitrophenol	420.000	ug/kg	D	UJ	360.000	ug/kg	C UJ
3,3'-Dichlorobenzidine	420.000	ug/kg	D	UJ	360.000	ug/kg	C UJ

0164

5174

TABLE E-6A
(Continued)

PHASE II - CHEMICAL PARAMETERS

BORING NUMBER	1998				1998			
SAMPLE NUMBER	112057				112065			
	10-11.5				17-18.5			
SAMPLING DATE	04/28/93				04/28/93			
CHEMICAL PARAMETERS	RESULTS	UNITS	L	VQ	RESULTS	UNITS	L	VQ
Semivolatile Organics								
3-Nitroaniline	1000.000	ug/kg	D	UJ	870.000	ug/kg	C	UJ
4,6-Dinitro-2-methylphenol	1000.000	ug/kg	D	UJ	870.000	ug/kg	C	UJ
4-Bromophenyl phenyl ether	420.000	ug/kg	D	UJ	360.000	ug/kg	C	UJ
4-Chloro-3-methylphenol	420.000	ug/kg	D	UJ	360.000	ug/kg	C	UJ
4-Chlorophenylphenyl ether	420.000	ug/kg	D	UJ	360.000	ug/kg	C	UJ
4-Methylphenol	420.000	ug/kg	D	UJ	360.000	ug/kg	C	UJ
4-Nitroaniline	1000.000	ug/kg	D	UJ	870.000	ug/kg	C	UJ
4-Nitrophenol	1000.000	ug/kg	D	UJ	870.000	ug/kg	C	UJ
Acenaphthene	420.000	ug/kg	D	UJ	360.000	ug/kg	C	UJ
Acenaphthylene	420.000	ug/kg	D	UJ	360.000	ug/kg	C	UJ
Anthracene	420.000	ug/kg	D	UJ	360.000	ug/kg	C	UJ
Benzo(a)anthracene	420.000	ug/kg	D	UJ	360.000	ug/kg	C	UJ
Benzo(a)pyrene	420.000	ug/kg	D	UJ	360.000	ug/kg	C	UJ
Benzo(b)fluoranthene	420.000	ug/kg	D	UJ	360.000	ug/kg	C	UJ
Benzo(g,h,i)perylene	420.000	ug/kg	D	UJ	360.000	ug/kg	C	UJ
Benzo(k)fluoranthene	420.000	ug/kg	D	UJ	360.000	ug/kg	C	UJ
Benzoic acid	2100.000	ug/kg	D	UJ	1700.000	ug/kg	C	UJ
Benzyl alcohol	420.000	ug/kg	D	UJ	360.000	ug/kg	C	UJ
Butyl benzyl phthalate	420.000	ug/kg	D	UJ	360.000	ug/kg	C	UJ
Carbazole	420.000	ug/kg	D	UJ	360.000	ug/kg	C	UJ
Chrysene	420.000	ug/kg	D	UJ	360.000	ug/kg	C	UJ
Di-n-butyl phthalate	420.000	ug/kg	D	UJ	360.000	ug/kg	C	UJ
Di-n-octyl phthalate	420.000	ug/kg	D	UJ	360.000	ug/kg	C	UJ
Dibenzo(a,h)anthracene	420.000	ug/kg	D	UJ	360.000	ug/kg	C	UJ
Dibenzofuran	420.000	ug/kg	D	UJ	360.000	ug/kg	C	UJ
Diethyl phthalate	420.000	ug/kg	D	UJ	360.000	ug/kg	C	UJ
Dimethyl phthalate	420.000	ug/kg	D	UJ	360.000	ug/kg	C	UJ
Fluoranthene	420.000	ug/kg	D	UJ	360.000	ug/kg	C	UJ
Fluorene	420.000	ug/kg	D	UJ	360.000	ug/kg	C	UJ
Hexachlorobenzene	420.000	ug/kg	D	UJ	360.000	ug/kg	C	UJ
Hexachlorobutadiene	420.000	ug/kg	D	UJ	360.000	ug/kg	C	UJ
Hexachlorocyclopentadiene	420.000	ug/kg	D	UJ	360.000	ug/kg	C	UJ
Hexachloroethane	420.000	ug/kg	D	UJ	360.000	ug/kg	C	UJ
Indeno(1,2,3-cd)pyrene	420.000	ug/kg	D	UJ	360.000	ug/kg	C	UJ
Isophorone	420.000	ug/kg	D	UJ	360.000	ug/kg	C	UJ
N-Nitroso-di-n-propylamine	420.000	ug/kg	D	UJ	360.000	ug/kg	C	UJ
N-Nitrosodiphenylamine	420.000	ug/kg	D	UJ	360.000	ug/kg	C	UJ
Naphthalene	420.000	ug/kg	D	UJ	360.000	ug/kg	C	UJ
Nitrobenzene	420.000	ug/kg	D	UJ	360.000	ug/kg	C	UJ
Pentachlorophenol	1000.000	ug/kg	D	UJ	870.000	ug/kg	C	UJ
Phenanthrene	420.000	ug/kg	D	UJ	360.000	ug/kg	C	UJ
Phenol	420.000	ug/kg	D	UJ	360.000	ug/kg	C	UJ

TABLE E-6A
(Continued)

PHASE II - CHEMICAL PARAMETERS

BORING NUMBER	1998				1998			
SAMPLE NUMBER	112057				112065			
	10-11.5				17-18.5			
SAMPLING DATE	04/28/93				04/28/93			
CHEMICAL PARAMETERS	RESULTS	UNITS	L	VQ	RESULTS	UNITS	L	VQ
Semivolatile Organics								
Pyrene	420.000	ug/kg	D	UJ	360.000	ug/kg	C	UJ
bis(2-Chloroethoxy)methane	420.000	ug/kg	D	UJ	360.000	ug/kg	C	UJ
bis(2-Chloroethyl)ether	420.000	ug/kg	D	UJ	360.000	ug/kg	C	UJ
bis(2-Chloroisopropyl) ether	420.000	ug/kg	D	UJ	360.000	ug/kg	C	UJ
bis(2-Ethylhexyl) phthalate	130.000	ug/kg	D	J	840.000	ug/kg	C	J
p-Chloroaniline	420.000	ug/kg	D	UJ	360.000	ug/kg	C	UJ
Pesticide Organics/PCBs								
4,4'-DDD	4.200	ug/kg	D	R	3.600	ug/kg	C	U
4,4'-DDE	4.200	ug/kg	D	R	3.600	ug/kg	C	U
4,4'-DDT	4.200	ug/kg	D	R	3.600	ug/kg	C	U
Aldrin	2.200	ug/kg	D	R	1.900	ug/kg	C	U
Aroclor-1016	42.000	ug/kg	D	U	36.000	ug/kg	C	UJ
Aroclor-1221	86.000	ug/kg	D	U	73.000	ug/kg	C	UJ
Aroclor-1232	42.000	ug/kg	D	U	36.000	ug/kg	C	UJ
Aroclor-1242	42.000	ug/kg	D	U	36.000	ug/kg	C	UJ
Aroclor-1248	42.000	ug/kg	D	U	36.000	ug/kg	C	UJ
Aroclor-1254	42.000	ug/kg	D	U	36.000	ug/kg	C	UJ
Aroclor-1260	42.000	ug/kg	D	U	36.000	ug/kg	C	UJ
Dieldrin	4.200	ug/kg	D	R	3.600	ug/kg	C	U
Endosulfan II	4.200	ug/kg	D	R	3.600	ug/kg	C	U
Endosulfan sulfate	4.200	ug/kg	D	R	3.600	ug/kg	C	U
Endosulfan-I	2.200	ug/kg	D	R	1.900	ug/kg	C	U
Endrin	4.200	ug/kg	D	R	3.600	ug/kg	C	U
Endrin aldehyde	4.200	ug/kg	D	R	3.600	ug/kg	C	U
Endrin ketone	4.200	ug/kg	D	R	3.600	ug/kg	C	U
Heptachlor	2.200	ug/kg	D	R	1.900	ug/kg	C	U
Heptachlor epoxide	2.200	ug/kg	D	R	1.900	ug/kg	C	U
Methoxychlor	22.000	ug/kg	D	R	19.000	ug/kg	C	U
Toxaphene	220.000	ug/kg	D	U	190.000	ug/kg	C	UJ
alpha-BHC	2.200	ug/kg	D	R	1.900	ug/kg	C	U
alpha-Chlordane	2.200	ug/kg	D	R	1.900	ug/kg	C	U
beta-BHC	2.200	ug/kg	D	R	1.900	ug/kg	C	U
delta-BHC	2.200	ug/kg	D	R	1.900	ug/kg	C	U
gamma-BHC (Lindane)	2.200	ug/kg	D	R	1.900	ug/kg	C	U
gamma-Chlordane	2.200	ug/kg	D	R	1.900	ug/kg	C	U

0166

5174

5174

TABLE E-6B
INACTIVE FLYASH PILE
TENTATIVELY IDENTIFIED COMPOUNDS
SUBSURFACE SOIL

Sample Number	Sample Location	Parameter	Result	Units
112045	1998	hexane (DOT)	19	ug/kg
112045	1998	cyclopentane, methyl-	10	ug/kg
112077	1996	hexane (DOT)	39	ug/kg
112084	1996	hexane (DOT)	18	ug/kg
112087	1996	limonene	1200	ug/kg
112087	1996	benzene, 1-methyl-(1-methyle	1300	ug/kg
112087	1996	3-carene	12000	ug/kg
112087	1996	bicyclo[3.1.1]heptane, 6,6-D	1600	ug/kg
113492	11006	tetradecanoid acid	130	ug/kg
113492	11006	decane, 3-cyclohexyl-, 3-cycl	17	ug/kg
113492	11006	dotriacontane	26	ug/kg
113492	11006	tetradecanoid acid	18	ug/kg
113492	11006	oxirane, tetradecyl-	15	ug/kg
113492	11006	tetratetracontane	90	ug/kg
113492	11006	cyclohexanol, 5-methyl-2-(1-	18	ug/kg
113492	11006	tetratetracontane	89	ug/kg
113492	11006	tritetracontane	25	ug/kg
113492	11006	octadecanoic acid	61	ug/kg
113492	11006	dotriacontane	37	ug/kg
113492	11006	tetradecanoid acid	340	ug/kg
113492	11006	cycloproanemethanol, .alpha	21	ug/kg
113492	11006	tritetracontane	26	ug/kg
113492	11006	5-octen-4-one, 7-methyl-	39	ug/kg
113492	11006	heptacosane	74	ug/kg
113492	11006	2h-3,9a-methano-1-benzoxepin	23	ug/kg
113492	11006	tetratetracontane	70	ug/kg
113492	11006	dotriacontane	18	ug/kg
113492	11006	heptacosane	95	ug/kg
113492	11006	dotriacontane	34	ug/kg
116070	1996	bicyclo[3.1.1]heptane, 6,6-D	350	ug/kg
116070	1996	limonene	250	ug/kg
116070	1996	3-carene	5600	ug/kg
116080	1995	pentane, 2-methyl	37	ug/kg
116080	1995	hexane (DOT)	420	ug/kg
116080	1995	1-pentene, 2-methyl-	130	ug/kg
116080	1995	pentane, 3-methyl-	94	ug/kg
116090	1995	hexane (DOT)	66	ug/kg
116177	1977	heptadecane, 2,6-dimethyl-	250	ug/kg
116177	1977	pentadecane	120	ug/kg
116177	1977	tetracontane,3,5,24-trimeth	100	ug/kg
116177	1977	cyclopropane, 1,1,2,2-tetram	100	ug/kg
116177	1977	heptadecane, 2,6-dimethyl-	170	ug/kg
116177	1977	heptadecane, 2,6-dimethyl-	170	ug/kg
116177	1977	1-heptanol, 6-methyl-	85	ug/kg
116177	1977	pentadecane	190	ug/kg
116177	1977	hexane, 2-bromo	89	ug/kg
116192	1977	2-cyclohexen-1-one, 3,5-dime	160	ug/kg
116192	1977	hexanedioic acid	560	ug/kg
116243	1997	heptadecane, 2,6-dimethyl-	150	ug/kg
116243	1997	hexane, 2-bromo	200	ug/kg
116243	1997	1-heptanol, 2,4-dimethyl-,	100	ug/kg
116252	1997	octacosane	110	ug/kg
116252	1997	1-heptanol, 6-methyl-	81	ug/kg
116252	1997	cyclopropane, 1,1,2,2-tetram	100	ug/kg
116252	1997	pentadecane	150	ug/kg

TABLE E-6B
INACTIVE FLYASH PILE
TENTATIVELY IDENTIFIED COMPOUNDS
SUBSURFACE SOIL

Sample Number	Sample Location	Parameter	Result	Units
116252	1997	heptadecane, 2,6-dimethyl-	120	ug/kg
116252	1997	octacosane	92	ug/kg
116252	1997	pentadecane	92	ug/kg
116257	1997	ethanone, 1-(3-ethyloxiranyl	73	ug/kg
116264	1994	methane, chlorodifluoro-	1200	ug/kg
116283	1994	methane, chlorodifluoro-	230	ug/kg
116264	1994	methane, chlorodifluoro-	170	ug/kg
116301	1994	cyclopentane, methyl-	10	ug/kg
116301	1994	hexane (DOT)	10	ug/kg
116301	1994	cyclotetrasiloxane, octameth	30	ug/kg
116312	1994	methane, chlorodifluoro-	75	ug/kg
116264	1994	hexanioc acid, 2-ethyl-	110	ug/kg
116264	1994	dodecanoic acid	220	ug/kg
116264	1994	1,2-benzenedicarboxylic acid	1100	ug/kg
116264	1994	hexadecanoic acid	410	ug/kg
116264	1994	pentadecane	190	ug/kg
116264	1994	pentadecane	120	ug/kg
116283	1994	3-penten-2-one, 4-methyl-	240	ug/kg
116283	1994	hexanioc acid, 2-ethyl-	120	ug/kg
116283	1994	glycene, n-methyl-n-(1-oxodo	160	ug/kg
116283	1994	1,2-benzenedicarboxylic acid	940	ug/kg
116283	1994	hexadecanoic acid	400	ug/kg
116283	1994	1-hexadecyne	480	ug/kg
116283	1994	pentadecane	230	ug/kg
116283	1994	pentadecane	310	ug/kg
116283	1994	pentadecane	180	ug/kg
116301	1994	ethanethioic acid, s-methyl	860	ug/kg
116301	1994	2-cyclohexen-1-one, 3,5-dime	290	ug/kg
116301	1994	glycene, n-methyl-n-(1-oxodo	150	ug/kg
116301	1994	1,2-benzenedicarboxylic acid	500	ug/kg
116301	1994	hexadecanoic acid	970	ug/kg
116301	1994	(z)6-pentadecen-1-ol	320	ug/kg
116301	1994	pentadecane	210	ug/kg
116301	1994	pentadecane	300	ug/kg
116301	1994	pentadecane	360	ug/kg
116312	1994	glycene, n-methyl-n-(1-oxodo	140	ug/kg
116312	1994	1,2-benzenedicarboxylic acid	140	ug/kg
116312	1994	hexadecanoic acid	290	ug/kg
116312	1994	pentadecane	130	ug/kg
116331	11055	cyclopropane, 1,1,2,2-tetram	500	ug/kg
116331	11055	hexanoic acid	130	ug/kg
116331	11055	heptadecane, 2,6-dimethyl-	98	ug/kg
116331	11055	1,2-benzenedicarboxylic acid	580	ug/kg
116331	11055	hexadecanoic acid	160	ug/kg
116331	11055	pentadecane	230	ug/kg
116331	11055	heptadecane, 2,6-dimethyl-	290	ug/kg
116331	11055	pentadecane	250	ug/kg
116331	11055	heptadecane, 2,6-dimethyl-	290	ug/kg
116331	11055	pentadecane	150	ug/kg
116332	11055	tetradecane	76	ug/kg
116332	11055	pentadecane	100	ug/kg
116332	11055	pentadecane	97	ug/kg
116332	11055	dodecane, 2,7,10-trimethyl-	100	ug/kg
116332	11055	pentadecane	110	ug/kg
116332	11055	pentadecane	76	ug/kg
116332	11055	1,2-benzenedicarboxylic acid	160	ug/kg
116332	11055	pentadecane	120	ug/kg

5174

TABLE E-6B
INACTIVE FLYASH PILE
TENTATIVELY IDENTIFIED COMPOUNDS
SUBSURFACE SOIL

Sample Number	Sample Location	Parameter	Result	Units
116332	11055	pentadecane	120	ug/kg
116332	11055	pentadecane	120	ug/kg
116332	11055	pentadecane	100	ug/kg
116332	11055	pentadecane	160	ug/kg
116332	11055	heptadecane, 2,6-dimethyl-	150	ug/kg
116332	11055	pentadecane	120	ug/kg
116335	11056	cyclotetrasiloxane, octameth	510	ug/kg
116335	11056	propanoic acid, 2-methyl-,	170	ug/kg
116335	11056	cyclotrisiloxane, hexamethyl	530	ug/kg
116336	11056	cyclotetrasiloxane, octameth	27	ug/kg
116336	11056	propanoic acid, 2-methyl-,	120	ug/kg
116336	11056	octacosane	140	ug/kg
116336	11056	heptadecane	180	ug/kg
116336	11056	pentacosane	210	ug/kg
116336	11056	pentacosane	250	ug/kg
116337	11057	azulene	6	ug/kg
116337	11057	propanoic acid, 2-methyl-,	83	ug/kg
116337	11057	pentadecane	83	ug/kg
116337	11057	heptadecane, 2,6-dimethyl-	110	ug/kg
116337	11057	pentadecane	82	ug/kg
116337	11057	pentadecane	85	ug/kg
116337	11057	pentadecane	77	ug/kg
116337	11057	pentadecane	110	ug/kg
116337	11057	pentadecane	92	ug/kg
116338	11057	2-cyclohexen-1-one, 3,5-dime	200	ug/kg
116338	11057	heptadecane, 2,6-dimethyl-	97	ug/kg
116338	11057	pentadecane	75	ug/kg
116338	11057	dodecane, 2,6,10-trimethyl-	78	ug/kg
116338	11057	pentadecane	100	ug/kg
116338	11057	pentadecane	96	ug/kg
116338	11057	pentadecane	93	ug/kg
116338	11057	pentadecane	120	ug/kg
116338	11057	pentadecane	93	ug/kg
116338	11057	pentadecane	120	ug/kg
116340	11054	propanoic acid, 2-methyl-,	95	ug/kg
116340	11054	pentadecane	100	ug/kg
116340	11054	heptadecane, 2,6-dimethyl-	120	ug/kg
116340	11054	pentadecane	86	ug/kg
116340	11054	heptadecane, 2,6-dimethyl-	79	ug/kg
116340	11054	pentadecane	90	ug/kg
116340	11054	pentadecane	88	ug/kg
116340	11054	pentadecane	85	ug/kg
116340	11054	pentadecane	110	ug/kg
116340	11054	pentadecane	100	ug/kg
116340	11054	pentadecane	130	ug/kg
116341	11054	pentadecane	130	ug/kg
116341	11054	heptadecane, 2,6-dimethyl-	150	ug/kg
116341	11054	pentadecane	120	ug/kg
116341	11054	dodecane, 2,6,10-trimethyl-	93	ug/kg
116341	11054	pentadecane	110	ug/kg
116341	11054	pentadecane	120	ug/kg
116341	11054	pentadecane	110	ug/kg
116341	11054	pentadecane	150	ug/kg

5174

TABLE E-6B
INACTIVE FLYASH PILE
TENTATIVELY IDENTIFIED COMPOUNDS
SUBSURFACE SOIL

Sample Number	Sample Location	Parameter	Result	Units
116341	11054	heptadecanr, 2,6,10,14-tetra	150	ug/kg
116427	11052	1,2-benzenedicarboxylic acid	140	ug/kg
116427	11052	octadecane, 1-chloro-	99	ug/kg
116427	11052	dotriacontane	150	ug/kg
116427	11052	dotriacontane	130	ug/kg
116427	11052	tritetracontane	130	ug/kg
116427	11052	dotriacontane	130	ug/kg
116427	11052	dotriacontane	120	ug/kg
116392	11040	cyclopentane, methyl-	170	ug/kg
116392	11040	pentane, 2-methyl-	64	ug/kg
116392	11040	hexane (DOT)	120	ug/kg
116392	11040	pentane, 3-methyl-	130	ug/kg
116392	11040	cyclotetrasiloxane, octameth	110	ug/kg
116392	11040	cyclotrisiloxane, hexamethyl	320	ug/kg
116441	11051	1,4-cyclohexadiene, 1-methyl	25	ug/kg
116441	11051	hexadecane	280	ug/kg
116441	11051	octacosane	270	ug/kg
116441	11051	1,2-benzenedicarboxylic acid	360	ug/kg
116441	11051	tetratetracontane	270	ug/kg
116441	11051	octadecanoic acid	300	ug/kg
116441	11051	heptacosane	380	ug/kg
116441	11051	tetratetracontane	710	ug/kg
116441	11051	heptacosane	960	ug/kg
116441	11051	heptacosane	940	ug/kg
116441	11051	tetratetracontane	930	ug/kg
116441	11051	tritetracontane	1000	ug/kg
116441	11051	tritetracontane	400	ug/kg
116441	11051	doctriacontane	670	ug/kg
116441	11051	doctriacontane	450	ug/kg

0170

TABLE E-7A

INACTIVE FLYASH PILE
RADIOLOGICAL DATA CIS SUBSURFACE SOIL RESULTS
OPERABLE UNIT 2 REMEDIAL INVESTIGATION
FERNALD ENVIRONMENTAL MANAGEMENT PROJECT

Radionuclide[a]	Validation Qualifier[b]	Activity Concentration (pCi/g, dry)	Uncertainty (pCi/g, dry)
BOREHOLE 24-10			
Cesium-137		NOT ANALYZED	
Neptunium-237		NOT ANALYZED	
Lead-210		5.00	1.00
Plutonium-238		NOT ANALYZED	
Plutonium-239/240		NOT ANALYZED	
Radium-226		4.10	0.70
Radium-228		2.00	0.70
Ruthenium-106		NOT ANALYZED	
Strontium-90		NOT ANALYZED	
Technetium-99		NOT ANALYZED	
Thorium-228		2.30	0.80
Thorium-230		11.00	2.00
Thorium-232		2.60	0.80
Uranium-234		48.00	1.00
Uranium-235		2.20	0.20
Uranium-238		50.00	1.00
BOREHOLE 24-11			
Cesium-137		NOT ANALYZED	
Neptunium-237		NOT ANALYZED	
Lead-210		3.00	1.00
Plutonium-238		NOT ANALYZED	
Plutonium-239/240		NOT ANALYZED	
Radium-226		1.50	0.50
Radium-228		1.70	0.70
Ruthenium-106		NOT ANALYZED	
Strontium-90		NOT ANALYZED	
Technetium-99		NOT ANALYZED	
Thorium-228		0.20	0.10
Thorium-230		0.20	0.10
Thorium-232		0.10	0.10
Uranium-234		3.70	0.30
Uranium-235		0.20	0.10
Uranium-238		6.60	0.40

[a]RA-226 and RA-228, when reported, were measured by gamma spectrometry and reported on a dry weight basis.
[b]Qualifiers are from the laboratory. No validation qualifers were available.

TABLE E-7B

INACTIVE FLYASH PILE
CIS SUBSURFACE SOIL RESULTS
NON-RADIOLOGICAL DATA
OPERABLE UNIT 2 REMEDIAL INVESTIGATION
FERNALD ENVIRONMENTAL MANAGEMENT PROJECT

Analyte	Sample No. PS-24-097 Boring 10 Result	Validation Qualifier	Sample No. PS-24-130 Boring 11 Result	Validation Qualifier
INORGANICS (mg/kg)				
Aluminum	6960	J	7560	
Antimony	0.3	UJ	0.4	UJ
Arsenic	31	J	11	J
Barium	205		271	
Beryllium	1.4		1.4	
Cadmium	3.8		2.4	
Calcium	54200		12100	J
Chromium	16		12	
Cobalt	11	J	9.2	B
Copper	23		22	
Cyanide	0.6	UJ	0.7	U
Iron	14800		7280	J
Lead	56		14	J
Magnesium	8520		3310	
Manganese	780	J	238	J
Mercury	0.3		0.2	J
Nickel	12		13	
Potassium	1080		676	
Selenium	0.4	U	2.4	J
Silver	1.6	UJ	1.8	UJ
Sodium	168		189	B
Thallium	0.3	J	0.3	J
Vanadium	26	J	29	
Zinc	46	J	36	
PCBs/PESTICIDES (µg/kg)				
2,6-Dinitrotoluene	-	-	850	U
4,4-ddd	-	U	21	U
4,4-dde	10	-	21	U
4,4-ddt	-	-	21	U
Aldrin	5.0	U	10	U

TABLE E-7B
(Continued)

Analyte	Sample No. PS-24-097 Boring 10 Result	Validation Qualifier	Sample No. PS-24-130 Boring 11 Result	Validation Qualifier
PCBs PESTICIDES (µg/kg) (Continued)				
Alpha-bhc	5.0	U	10	U
Aroclor 1016	50	U	100	U
Aroclor 1221	50	U	100	U
Aroclor 1232	50	U	100	U
Aroclor 1242	50	U	100	U
Aroclor 1248	50	U	100	U
Aroclor 1254	290		210	U
Aroclor 1260	100	U	210	U
Beta-bhc	5.0	U	10	U
Chlordane	50	U	100	U
Delta-bhc	5.0	U	10	U
Dieldrin	10	U	21	U
Endosulfan I	5.0	U	10	U
Endosulfan II	10	U	21	U
Endosulfan sulfate	10	U	21	U
Endrin	10	UJ	21	U
Endrin ketone	10	U	21	U
Heptachlor	5.0	U	10	U
Heptachlor epoxide	5.0	U	10	U
Methoxychlor	50	U	100	U
Toxaphene	100	U	210	U

NOTE: Volatile and Semivolatile organic compounds were not sampled for the Inactive Flyash Pile.

0173

TABLE E-8

INACTIVE FLYASH PILE
SUBSURFACE MEDIA ENVIRONMENTAL SURVEY
OPERABLE UNIT 2 REMEDIAL INVESTIGATION
FERNALD ENVIRONMENTAL MANAGEMENT PROJECT

Analyte	FEO604WP	FEO605WP	FEO607WP	FEO608WP	FEO609WP
Asbestos	ND	ND	ND	ND	ND
RADIONUCLIDES (pCi/g)					
Bismuth-214	1.4±0.1	1.9±0.2	2.4±0.2	2.1±0.1	1.6±0.1
Cesium-137	I	I	I	I	I
Radium-226	1.2±0.1G	1.7±0.1G	2.4±0.2G	1.8±0.1G	1.5±0.1G
Thorium-228	1.2±0.1G	2.2±0.2G	2.4±0.2G	2.2±0.1G	2.2±0.1G
Thorium-232	0.94±0.12G	2.2±0.3G	2.4±0.4G	2.1±0.1G	2.2±0.1G
Uranium-235	N	N	N	N	N
Uranium-238	I	N	N	N	I
Total Uranium (mg/kg)	17.0	12.0	9.4	8.4	10.0
TCLP METALS (mg/L)					
Silver	<0.1	<0.1	<0.1	<0.1	<0.1
Arsenic	<0.5	<0.5	<0.5	<0.5	<0.5
Barium	0.61	0.73	0.37	1.22	1.15
Cadmium	<0.02	<0.02	<0.02	<0.02	<0.02
Chromium	<0.03	<0.03	<0.03	<0.03	<0.03
Mercury	<0.001	<0.001	<0.001	<0.001	<0.001
Lead	<0.3	<0.3	<0.3	<0.3	<0.3
Selenium	<0.5	<0.5	<0.5	<0.5	<0.5
VOLATILE ORGANIC COMPOUNDS (µg/kg)					
1,1,1-Tricloroethane	<5	<5	<5	100	84
1,1,2,2-Tetrachloroethane	<5	<5	<5	<5	<5
1,1,2-Trichloroethane	<5	<5	<5	<5	<5
1,1-Dichloroethane	<5	<5	<5	<5	<5
1,2-Dichloroethane	<5	<5	<5	<5	<5
1,2-Dichloropropane	<5	<5	<5	<5	<5
2-Butanone	<10	<10	<10	<10	<10
2-Chloroethylvinyl Ether	<10	<10	<10	<10	<10
2-Hexanone	<10	<10	<10	<10	<10
4-Methyl-2-pentanone	<10	<10	<10	<10	<10
Acetone	24 B	<10	50 B	<10	<10
Benzene	<5	<5	<5	<5	<5
Bromodichloromethane	<5	<5	<5	<5	<5
Bromoform	<5	<5	<5	<5	<5

See notes at end of table

TABLE E-8
(Continued)

Analyte	FEO604WP	FEO605WP	FEO607WP	FEO608WP	FEO609WP
VOLATILE ORGANIC COMPOUNDS (µg/kg) (continued)					
Bromomethane	<10	<10	<10	<10	<10
Carbon disulfide	<5	<5	<5	<5	<5
Carbon tetrachloride	<5	<5	<5	<5	<5
Chlorobenzene	<5	<5	<5	<5	<5
Chloroethane	<10	<10	<10	<10	<10
Chloroform	<5	<5	<5	<5	<5
Chloromethane	<10	<10	<10	<10	<5
Cis-1,3-dichloropropene	<5	<5	<5	<5	<5
Dibromeochloromethane	<5	<5	<5	<5	<5
Ethyl benzene	<5	<5	<5	<5	<5
Methylene chloride	110	52	21 B	28 B	27
Styrene	<5	<5	<5	<5	<5
Tetrachloroethene	<5	<5	<5	<5	<5
Toluene	<5	60	<5	<5	34
Total xylenes	<5	<5	<5	<5	<5
Trans-1,2-dichloroethene	<5	<5	<5	<5	<5
Trans-1,3-dichloropropene	<5	<5	<5	<5	<5
Trichlorothene	<5	<5	<5	<5	<5
Vinyl acetate	<10	<10	<10	<10	<10
Vinyl chloride	<10	<10	<10	<10	<10
PCBs (mg/kg)					
Aroclor-1242	NA	NA	NA	NA	NA
Aroclor-1248	NA	NA	NA	NA	NA
Aroclor-1254	NA	NA	NA	NA	NA
Aroclor-1260	NA	NA	NA	NA	NA

ND = None Detected
NA = Not Analyzed
N = Nuclide not identified by GAMANAL analysis as being present in the sample; no value reported
I = Nuclide identified by GAMANAL analysis of sample spectrum, but values did not exceed room background at the 95% confidence level; no value reported
B = Analyte was found in the blank as well as the sample
G = Gamma Spectroscopy Analysis

TABLE E-9

INACTIVE FLYASH PILE
RI/FS SEDIMENT RESULTS
OPERABLE UNIT 2 REMEDIAL INVESTIGATION
FERNALD ENVIRONMENTAL MANAGEMENT PROJECT

PHASE I - RADIOLOGICAL PARAMETERS

BORING NUMBER	ASIT-008			ASIT-009			W-11		
SAMPLE NUMBER	009048			009049			009037		
SAMPLING DATE	06/27/88			06/27/88			06/18/88		
RADIOLOGICAL PARAMETERS	RESULTS	UNITS	VQ	RESULTS	UNITS	VQ	RESULTS	UNITS	VQ
GROSS ALPHA	14.000	pci/g	NV	6.000	pci/g	NV	3.000	pci/g	NV
GROSS BETA	24.000	pci/g	NV	13.000	pci/g	NV	10.000	pci/g	NV
RA-226	0.885	pci/g	J	0.687	pci/g	J	0.500	pci/g	J
RA-228	0.901	pci/g	J	0.690	pci/g	J	0.500	pci/g	UJ
U-TOTAL	13.900	mg/kg	J	5.380	mg/kg	J	2.000	mg/kg	J

5174

TABLE E-9
(Continued)

PHASE I - RADIOLOGICAL PARAMETERS

BORING NUMBER	W-11			W-11		
SAMPLE NUMBER	009103			009155		
SAMPLING DATE	08/27/88			04/17/89		
RADIOLOGICAL PARAMETERS	RESULTS	UNITS	VQ	RESULTS	UNITS	VQ
GROSS ALPHA	NA			34.000	pci/g	NV
GROSS BETA	NA			7.000	pci/g	NV
RA-226	0.400	pci/g	J	0.600	pci/g	J
RA-228	0.500	pci/g	UJ	0.500	pci/g	UJ
U-TOTAL	1.000	mg/kg	J	1.000	mg/kg	UJ

0177

TABLE E-9
(Continued)

PHASE I - CHEMICAL PARAMETERS

BORING NUMBER	W-11
SAMPLE NUMBER	009145
SAMPLING DATE	01/12/89

CHEMICAL PARAMETERS	RESULTS	UNITS	L	VQ
Inorganics				
Aluminum	2080.000	mg/kg	C	-
Antimony	0.100	mg/kg	C	R
Arsenic	2.700	mg/kg	C	J
Barium	21.000	mg/kg	C	-
Beryllium	0.500	mg/kg	C	-
Cadmium	4.500	mg/kg	C	-
Calcium	110000.000	mg/kg	C	-
Chromium	17.400	mg/kg	C	-
Cobalt	4.700	mg/kg	C	-
Copper	11.700	mg/kg	C	-
Cyanide	2.400	mg/kg	C	U
Iron	5940.000	mg/kg	C	-
Lead	4.600	mg/kg	C	R
Magnesium	26600.000	mg/kg	C	-
Manganese	362.000	mg/kg	C	-
Mercury	0.100	mg/kg	C	U
Molybdenum	4.600	mg/kg	C	U
Nickel	16.400	mg/kg	C	-
Potassium	366.000	mg/kg	C	-
Selenium	0.500	mg/kg	C	UJ
Silver	0.100	mg/kg	C	U
Sodium	188.000	mg/kg	C	J
Thallium	0.200	mg/kg	C	U
Vanadium	13.700	mg/kg	C	-
Zinc	13.400	mg/kg	C	J
Volatile Organics				
1,1,1-Trichloroethane	6.000	ug/kg	C	U
1,1,2,2-Tetrachloroethane	6.000	ug/kg	C	U
1,1,2-Trichloroethane	6.000	ug/kg	C	U
1,1-Dichloroethane	6.000	ug/kg	C	U
1,1-Dichloroethene	6.000	ug/kg	C	U
1,2-Dichloroethane	6.000	ug/kg	C	U
1,2-Dichloroethene	6.000	ug/kg	C	U
1,2-Dichloropropane	6.000	ug/kg	C	U
2-Butanone	12.000	ug/kg	C	U
2-Hexanone	12.000	ug/kg	C	U
4-Methyl-2-pentanone	12.000	ug/kg	C	U
Acetone	8.000	ug/kg	C	U
Benzene	6.000	ug/kg	C	U
Bromodichloromethane	6.000	ug/kg	C	U

TABLE E-9
(Continued)

PHASE I - CHEMICAL PARAMETERS

BORING NUMBER	W-11
SAMPLE NUMBER	009145
SAMPLING DATE	01/12/89

CHEMICAL PARAMETERS	RESULTS	UNITS	L	VQ
Volatile Organics				
Bromoform	6.000	ug/kg	C	U
Bromomethane	12.000	ug/kg	C	U
Carbon Tetrachloride	6.000	ug/kg	C	U
Carbon disulfide	6.000	ug/kg	C	U
Chlorobenzene	6.000	ug/kg	C	U
Chloroethane	12.000	ug/kg	C	U
Chloroform	6.000	ug/kg	C	U
Chloromethane	12.000	ug/kg	C	U
Dibromochloromethane	6.000	ug/kg	C	U
Ethylbenzene	6.000	ug/kg	C	U
Methylene chloride	15.000	ug/kg	C	U
Styrene	6.000	ug/kg	C	U
Tetrachloroethene	6.000	ug/kg	C	U
Toluene	6.000	ug/kg	C	U
Trichloroethene	6.000	ug/kg	C	U
Vinyl Acetate	12.000	ug/kg	C	U
Vinyl chloride	12.000	ug/kg	C	U
Xylenes, Total	6.000	ug/kg	C	U
cis-1,3-Dichloropropene	6.000	ug/kg	C	U
trans-1,3-Dichloropropene	6.000	ug/kg	C	U
Semivolatile Organics				
1,2,4-Trichlorobenzene	400.000	ug/kg	D	U
1,2-Dichlorobenzene	400.000	ug/kg	D	U
1,3-Dichlorobenzene	400.000	ug/kg	D	U
1,4-Dichlorobenzene	400.000	ug/kg	D	U
2,4,5-Trichlorophenol	2000.000	ug/kg	D	U
2,4,6-Trichlorophenol	400.000	ug/kg	D	U
2,4-Dichlorophenol	400.000	ug/kg	D	U
2,4-Dimethylphenol	400.000	ug/kg	D	U
2,4-Dinitrophenol	2000.000	ug/kg	D	UJ
2,4-Dinitrotoluene	400.000	ug/kg	D	U
2,6-Dinitrotoluene	400.000	ug/kg	D	U
2-Chloronaphthalene	400.000	ug/kg	D	U
2-Chlorophenol	400.000	ug/kg	D	U
2-Methylnaphthalene	400.000	ug/kg	D	U
2-Methylphenol	400.000	ug/kg	D	U
2-Nitroaniline	2000.000	ug/kg	D	U
2-Nitrophenol	400.000	ug/kg	D	U
3,3'-Dichlorobenzidine	800.000	ug/kg	D	U
3-Nitroaniline	2000.000	ug/kg	D	U

TABLE E-9
(Continued)

PHASE I - CHEMICAL PARAMETERS

BORING NUMBER	W-11
SAMPLE NUMBER	009145
SAMPLING DATE	01/12/89

CHEMICAL PARAMETERS	RESULTS	UNITS	L	VQ
Semivolatile Organics				
4,6-Dinitro-2-methylphenol	2000.000	ug/kg	D	UJ
4-Bromophenyl phenyl ether	400.000	ug/kg	D	U
4-Chloro-3-methylphenol	400.000	ug/kg	D	U
4-Chlorophenylphenyl ether	400.000	ug/kg	D	U
4-Methylphenol	400.000	ug/kg	D	U
4-Nitroaniline	2000.000	ug/kg	D	U
4-Nitrophenol	2000.000	ug/kg	D	UJ
Acenaphthene	400.000	ug/kg	D	U
Acenaphthylene	400.000	ug/kg	D	U
Anthracene	400.000	ug/kg	D	U
Benzo(a)anthracene	400.000	ug/kg	D	U
Benzo(a)pyrene	400.000	ug/kg	D	U
Benzo(b)fluoranthene	400.000	ug/kg	D	U
Benzo(g,h,i)perylene	400.000	ug/kg	D	U
Benzo(k)fluoranthene	400.000	ug/kg	D	U
Benzoic acid	2000.000	ug/kg	D	U
Benzyl alcohol	400.000	ug/kg	D	U
Butyl benzyl phthalate	400.000	ug/kg	D	U
Chrysene	400.000	ug/kg	D	U
Di-n-butyl phthalate	55.000	ug/kg	D	U
Di-n-octyl phthalate	400.000	ug/kg	D	U
Dibenzo(a,h)anthracene	400.000	ug/kg	D	U
Dibenzofuran	400.000	ug/kg	D	U
Diethyl phthalate	400.000	ug/kg	D	U
Dimethyl phthalate	400.000	ug/kg	D	U
Fluoranthene	400.000	ug/kg	D	U
Fluorene	400.000	ug/kg	D	U
Hexachlorobenzene	400.000	ug/kg	D	U
Hexachlorobutadiene	400.000	ug/kg	D	U
Hexachlorocyclopentadiene	400.000	ug/kg	D	UJ
Hexachloroethane	400.000	ug/kg	D	U
Indeno(1,2,3-cd)pyrene	400.000	ug/kg	D	U
Isophorone	400.000	ug/kg	D	U
N-Nitroso-di-n-propylamine	400.000	ug/kg	D	U
N-Nitrosodiphenylamine	400.000	ug/kg	D	U
Naphthalene	400.000	ug/kg	D	U
Nitrobenzene	400.000	ug/kg	D	U
Pentachlorophenol	2000.000	ug/kg	D	U
Phenanthrene	400.000	ug/kg	D	U
Phenol	400.000	ug/kg	D	U
Pyrene	400.000	ug/kg	D	U
bis(2-Chloroethoxy)methane	400.000	ug/kg	D	U

0180

5174

TABLE E-9
(Continued)

PHASE I - CHEMICAL PARAMETERS

BORING NUMBER	W-11		
SAMPLE NUMBER	009145		
SAMPLING DATE	01/12/89		
CHEMICAL PARAMETERS	RESULTS	UNITS	L VQ
Semivolatile Organics			
bis(2-Chloroethyl)ether	400.000	ug/kg	D U
bis(2-Chloroisopropyl) ether	400.000	ug/kg	D UJ
bis(2-Ethylhexyl) phthalate	500.000	ug/kg	D U
p-Chloroaniline	400.000	ug/kg	D UJ
Pesticide Organics/PCBs			
4,4'-DDD	20.000	ug/kg	C U
4,4'-DDE	20.000	ug/kg	C U
4,4'-DDT	20.000	ug/kg	C U
Aldrin	9.900	ug/kg	C U
Aroclor-1016	99.000	ug/kg	C U
Aroclor-1221	99.000	ug/kg	C U
Aroclor-1232	99.000	ug/kg	C U
Aroclor-1242	99.000	ug/kg	C U
Aroclor-1248	99.000	ug/kg	C U
Aroclor-1254	200.000	ug/kg	C U
Aroclor-1260	200.000	ug/kg	C U
Dieldrin	20.000	ug/kg	C U
Endosulfan II	20.000	ug/kg	C U
Endosulfan sulfate	20.000	ug/kg	C U
Endosulfan-I	9.900	ug/kg	C U
Endrin	20.000	ug/kg	C U
Endrin ketone	20.000	ug/kg	C U
Heptachlor	9.900	ug/kg	C U
Heptachlor epoxide	9.900	ug/kg	C U
Methoxychlor	99.000	ug/kg	C U
Toxaphene	200.000	ug/kg	C U
alpha-BHC	9.900	ug/kg	C U
alpha-Chlordane	99.000	ug/kg	C U
beta-BHC	170.000	ug/kg	C UJ
delta-BHC	9.900	ug/kg	C U
gamma-BHC (Lindane)	9.900	ug/kg	C U
gamma-Chlordane	99.000	ug/kg	C U

TABLE E-9
(Continued)

PHASE II - RADIOLOGICAL PARAMETERS

BORING NUMBER	IFP-SD-02			IFP-SD-02			IFP-SD-03		
SAMPLE NUMBER	111812			112021			116219		
	0 - 0.5			0 - 0.5					
SAMPLING DATE	04/17/93			04/30/93			05/01/93		
RADIOLOGICAL PARAMETERS	RESULTS	UNITS	VQ	RESULTS	UNITS	VQ	RESULTS	UNITS	VQ
CS-137	0.100	pci/g	UJ	0.078	pci/g	UJ	0.076	pci/g	UJ
GROSS ALPHA	15.600	pci/g	-	15.200	pci/g	J	16.640	pci/g	-
GROSS BETA	17.600	pci/g	-	16.300	pci/g	J	21.440	pci/g	-
NP-237	0.050	pci/g	U	0.019	pci/g	N	0.171	pci/g	N
PU-238	0.130	pci/g	U	0.019	pci/g	J	0.043	pci/g	J
PU-239/240	0.030	pci/g	J	0.027	pci/g	UJ	0.050	pci/g	UJ
RA-226	0.750	pci/g	-	0.650	pci/g	J	0.996	pci/g	-
RA-228	0.510	pci/g	-	0.670	pci/g	-	0.510	pci/g	-
RU-106	0.700	pci/g	UJ	0.670	pci/g	UJ	0.590	pci/g	UJ
SR-90	0.480	pci/g	J	0.430	pci/g	UJ	0.430	pci/g	UJ
TC-99	0.420	pci/g	UJ	0.382	pci/g	UJ	0.360	pci/g	UJ
TH-228	0.490	pci/g	J	0.420	pci/g	J	0.517	pci/g	J
TH-230	1.280	pci/g	J	0.750	pci/g	-	0.879	pci/g	J
TH-232	0.550	pci/g	J	0.390	pci/g	J	0.650	pci/g	J
TH-TOTAL	5.040	ug/g	-	3.570	ug/g	-	5.920	ug/g	J
U-234	1.500	pci/g	-	0.770	pci/g	J	0.640	pci/g	-
U-235/236	0.120	pci/g	J	0.054	pci/g	J	0.029	pci/g	J
U-238	1.680	pci/g	-	0.720	pci/g	J	0.900	pci/g	-
U-TOTAL	12.000	mg/kg	J	12.300	mg/kg	J	4.090	mg/kg	-

TABLE E-9
(Continued)

PHASE II - RADIOLOGICAL PARAMETERS

BORING NUMBER	IFP-SD-04		
SAMPLE NUMBER	112017		
	0 - 0.5		
SAMPLING DATE	04/29/93		
RADIOLOGICAL PARAMETERS	**RESULTS**	**UNITS**	**VQ**
CS-137	0.083	pci/g	UJ
GROSS ALPHA	14.000	pci/g	J
GROSS BETA	16.800	pci/g	J
NP-237	0.110	pci/g	N
PU-238	0.050	pci/g	J
PU-239/240	0.057	pci/g	J
RA-226	0.700	pci/g	J
RA-228	0.590	pci/g	-
RU-106	0.670	pci/g	UJ
SR-90	0.385	pci/g	UJ
TC-99	0.380	pci/g	UJ
TH-228	0.410	pci/g	J
TH-230	0.860	pci/g	-
TH-232	0.580	pci/g	J
TH-TOTAL	5.280	ug/g	-
U-234	0.800	pci/g	J
U-235/236	0.027	pci/g	J
U-238	0.740	pci/g	J
U-TOTAL	9.900	mg/kg	J

TABLE E-9
(Continued)

PHASE II - CHEMICAL PARAMETERS

BORING NUMBER	IFP-SD-02			IFP-SD-03			IFP-SD-03		
SAMPLE NUMBER	111812			116219			111813		
	0-0.5						0-0.5		
SAMPLING DATE	04/17/93			05/01/93			04/17/93		
CHEMICAL PARAMETERS	RESULTS	UNITS	L VQ	RESULTS	UNITS	L VQ	RESULTS	UNITS	L VQ
Inorganics									
Aluminum	4020.000	mg/kg	C -	4090.000	mg/kg	C -	2220.000	mg/kg	C -
Antimony	1.200	mg/kg	C UJ	0.260	mg/kg	C R	1.300	mg/kg	C UJ
Arsenic	5.400	mg/kg	C -	3.400	mg/kg	C J	7.300	mg/kg	C -
Barium	27.300	mg/kg	C -	40.100	mg/kg	C -	50.200	mg/kg	C -
Beryllium	0.470	mg/kg	C U	1.200	mg/kg	C -	0.520	mg/kg	C U
Cadmium	1.200	mg/kg	C U	0.730	mg/kg	C -	1.300	mg/kg	C U
Calcium	111000.000	mg/kg	C -	93700.000	mg/kg	C -	191000.000	mg/kg	C -
Chromium	6.500	mg/kg	C -	6.600	mg/kg	C -	4.600	mg/kg	C -
Cobalt	4.800	mg/kg	C -	5.400	mg/kg	C -	3.700	mg/kg	C -
Copper	9.500	mg/kg	C -	9.000	mg/kg	C U	5.000	mg/kg	C -
Cyanide	0.120	mg/kg	C U	0.130	mg/kg	C U	0.130	mg/kg	C U
Iron	10300.000	mg/kg	C -	8960.000	mg/kg	C -	9670.000	mg/kg	C -
Lead	6.700	mg/kg	C -	7.100	mg/kg	C J	9.200	mg/kg	C -
Magnesium	29600.000	mg/kg	C -	21300.000	mg/kg	C J	29800.000	mg/kg	C -
Manganese	386.000	mg/kg	C -	514.000	mg/kg	C -	781.000	mg/kg	C -
Mercury	0.090	mg/kg	C U	0.130	mg/kg	C U	0.090	mg/kg	C U
Molybdenum	4.700	mg/kg	C U	0.780	mg/kg	C U	5.200	mg/kg	C U
Nickel	11.700	mg/kg	C -	8.500	mg/kg	C -	5.200	mg/kg	C U
Potassium	650.000	mg/kg	C -	622.000	mg/kg	C J	395.000	mg/kg	C -
Selenium	0.470	mg/kg	C U	0.260	mg/kg	C UJ	0.470	mg/kg	C U
Silicon	767.000	mg/kg	C -	824.000	mg/kg	C -	867.000	mg/kg	C -
Silver	2.400	mg/kg	C U	0.520	mg/kg	C U	2.600	mg/kg	C U
Sodium	150.000	mg/kg	C -	172.000	mg/kg	C J	157.000	mg/kg	C -
Thallium	0.520	mg/kg	C J	0.260	mg/kg	C U	0.470	mg/kg	C U
Vanadium	13.200	mg/kg	C -	14.100	mg/kg	C J	10.900	mg/kg	C -
Zinc	41.700	mg/kg	C -	28.800	mg/kg	C -	23.200	mg/kg	C -
Volatile Organics									
1,1,1-Trichloroethane	12.000	ug/kg	C U	13.000	ug/kg	C U	13.000	ug/kg	C U
1,1,2,2-Tetrachloroethane	12.000	ug/kg	C U	13.000	ug/kg	C U	13.000	ug/kg	C U
1,1,2-Trichloroethane	12.000	ug/kg	C U	13.000	ug/kg	C U	13.000	ug/kg	C U
1,1-Dichloroethane	12.000	ug/kg	C U	13.000	ug/kg	C U	13.000	ug/kg	C U
1,1-Dichloroethene	12.000	ug/kg	C U	13.000	ug/kg	C U	13.000	ug/kg	C U
1,2-Dichloroethane	12.000	ug/kg	C U	13.000	ug/kg	C U	13.000	ug/kg	C U
1,2-Dichloroethene	12.000	ug/kg	C U	13.000	ug/kg	C U	13.000	ug/kg	C U
1,2-Dichloropropane	12.000	ug/kg	C U	13.000	ug/kg	C U	13.000	ug/kg	C U
2-Butanone	12.000	ug/kg	C U	13.000	ug/kg	C U	13.000	ug/kg	C U
2-Hexanone	12.000	ug/kg	C UJ	13.000	ug/kg	C U	13.000	ug/kg	C UJ
4-Methyl-2-pentanone	12.000	ug/kg	C U	13.000	ug/kg	C U	13.000	ug/kg	C U
Acetone	12.000	ug/kg	C UJ	14.000	ug/kg	C U	13.000	ug/kg	C UJ
Benzene	12.000	ug/kg	C U	13.000	ug/kg	C U	13.000	ug/kg	C U

TABLE E-9
(Continued)

PHASE II - CHEMICAL PARAMETERS

BORING NUMBER	IFP-SD-02			IFP-SD-03			IFP-SD-03		
SAMPLE NUMBER	111812			116219			111813		
	0-0.5						0-0.5		
SAMPLING DATE	04/17/93			05/01/93			04/17/93		
CHEMICAL PARAMETERS	RESULTS	UNITS	L VQ	RESULTS	UNITS	L VQ	RESULTS	UNITS	L VQ
Volatile Organics									
Bromodichloromethane	12.000	ug/kg	C U	13.000	ug/kg	C U	13.000	ug/kg	C U
Bromoform	12.000	ug/kg	C U	13.000	ug/kg	C U	13.000	ug/kg	C U
Bromomethane	12.000	ug/kg	C UJ	13.000	ug/kg	C U	13.000	ug/kg	C UJ
Carbon Tetrachloride	12.000	ug/kg	C U	13.000	ug/kg	C U	13.000	ug/kg	C U
Carbon disulfide	12.000	ug/kg	C U	13.000	ug/kg	C U	13.000	ug/kg	C U
Chlorobenzene	12.000	ug/kg	C U	13.000	ug/kg	C U	13.000	ug/kg	C U
Chloroethane	12.000	ug/kg	C U	13.000	ug/kg	C U	13.000	ug/kg	C U
Chloroform	12.000	ug/kg	C U	13.000	ug/kg	C U	13.000	ug/kg	C U
Chloromethane	12.000	ug/kg	C U	13.000	ug/kg	C U	13.000	ug/kg	C U
Dibromochloromethane	12.000	ug/kg	C U	13.000	ug/kg	C U	13.000	ug/kg	C U
Ethylbenzene	12.000	ug/kg	C U	13.000	ug/kg	C U	13.000	ug/kg	C U
Methylene chloride	15.000	ug/kg	C U	13.000	ug/kg	C U	19.000	ug/kg	C U
Styrene	12.000	ug/kg	C U	13.000	ug/kg	C U	13.000	ug/kg	C U
Tetrachloroethene	12.000	ug/kg	C U	13.000	ug/kg	C U	13.000	ug/kg	C U
Toluene	12.000	ug/kg	C U	35.000	ug/kg	C -	13.000	ug/kg	C U
Trichloroethene	12.000	ug/kg	C U	13.000	ug/kg	C U	13.000	ug/kg	C U
Vinyl Acetate	12.000	ug/kg	C UJ	13.000	ug/kg	C U	13.000	ug/kg	C UJ
Vinyl chloride	12.000	ug/kg	C U	13.000	ug/kg	C U	13.000	ug/kg	C U
Xylenes, Total	12.000	ug/kg	C U	13.000	ug/kg	C U	13.000	ug/kg	C U
cis-1,3-Dichloropropene	12.000	ug/kg	C U	13.000	ug/kg	C U	13.000	ug/kg	C U
trans-1,3-Dichloropropene	12.000	ug/kg	C U	13.000	ug/kg	C U	13.000	ug/kg	C U
Semivolatile Organics									
1,2,4-Trichlorobenzene	400.000	ug/kg	C U	410.000	ug/kg	C U	440.000	ug/kg	C U
1,2-Dichlorobenzene	400.000	ug/kg	C U	410.000	ug/kg	C U	440.000	ug/kg	C U
1,3-Dichlorobenzene	400.000	ug/kg	C U	410.000	ug/kg	C U	440.000	ug/kg	C U
1,4-Dichlorobenzene	400.000	ug/kg	C U	410.000	ug/kg	C U	440.000	ug/kg	C U
2,4,5-Trichlorophenol	1900.000	ug/kg	C U	1000.000	ug/kg	C U	2100.000	ug/kg	C U
2,4,6-Trichlorophenol	400.000	ug/kg	C U	410.000	ug/kg	C U	440.000	ug/kg	C U
2,4-Dichlorophenol	400.000	ug/kg	C U	410.000	ug/kg	C U	440.000	ug/kg	C U
2,4-Dimethylphenol	400.000	ug/kg	C U	410.000	ug/kg	C U	440.000	ug/kg	C U
2,4-Dinitrophenol	1900.000	ug/kg	C R	1000.000	ug/kg	C U	2100.000	ug/kg	C R
2,4-Dinitrotoluene	400.000	ug/kg	C U	410.000	ug/kg	C U	440.000	ug/kg	C U
2,6-Dinitrotoluene	400.000	ug/kg	C U	410.000	ug/kg	C U	440.000	ug/kg	C U
2-Chloronaphthalene	400.000	ug/kg	C U	410.000	ug/kg	C U	440.000	ug/kg	C U
2-Chlorophenol	400.000	ug/kg	C U	410.000	ug/kg	C U	440.000	ug/kg	C U
2-Methylnaphthalene	400.000	ug/kg	C U	410.000	ug/kg	C U	440.000	ug/kg	C U
2-Methylphenol	400.000	ug/kg	C U	410:000	ug/kg	C U	440.000	ug/kg	C U
2-Nitroaniline	1900.000	ug/kg	C U	1000.000	ug/kg	C U	2100.000	ug/kg	C U
2-Nitrophenol	400.000	ug/kg	C U	410.000	ug/kg	C U	440.000	ug/kg	C U
3,3'-Dichlorobenzidine	400.000	ug/kg	C U	410.000	ug/kg	C U	440.000	ug/kg	C U

TABLE E-9
(Continued)

PHASE II - CHEMICAL PARAMETERS

BORING NUMBER	IFP-SD-02			IFP-SD-03			IFP-SD-03		
SAMPLE NUMBER	111812			116219			111813		
	0-0.5						0-0.5		
SAMPLING DATE	04/17/93			05/01/93			04/17/93		
CHEMICAL PARAMETERS	RESULTS	UNITS	L VQ	RESULTS	UNITS	L VQ	RESULTS	UNITS	L VQ
Semivolatile Organics									
3-Nitroaniline	1900.000	ug/kg	C U	1000.000	ug/kg	C U	2100.000	ug/kg	C U
4,6-Dinitro-2-methylphenol	1900.000	ug/kg	C R	1000.000	ug/kg	C U	2100.000	ug/kg	C R
4-Bromophenyl phenyl ether	400.000	ug/kg	C U	410.000	ug/kg	C U	440.000	ug/kg	C U
4-Chloro-3-methylphenol	400.000	ug/kg	C U	410.000	ug/kg	C U	440.000	ug/kg	C U
4-Chlorophenylphenyl ether	400.000	ug/kg	C U	410.000	ug/kg	C U	440.000	ug/kg	C U
4-Methylphenol	400.000	ug/kg	C U	310.000	ug/kg	C J	440.000	ug/kg	C U
4-Nitroaniline	1900.000	ug/kg	C U	1000.000	ug/kg	C U	2100.000	ug/kg	C U
4-Nitrophenol	1900.000	ug/kg	C UJ	1000.000	ug/kg	C U	2100.000	ug/kg	C R
Acenaphthene	400.000	ug/kg	C U	410.000	ug/kg	C U	440.000	ug/kg	C U
Acenaphthylene	400.000	ug/kg	C U	410.000	ug/kg	C U	440.000	ug/kg	C U
Anthracene	400.000	ug/kg	C U	410.000	ug/kg	C U	440.000	ug/kg	C U
Benzo(a)anthracene	400.000	ug/kg	C U	410.000	ug/kg	C U	440.000	ug/kg	C U
Benzo(a)pyrene	9.000	ug/kg	C J	410.000	ug/kg	C U	440.000	ug/kg	C U
Benzo(b)fluoranthene	400.000	ug/kg	C U	410.000	ug/kg	C U	440.000	ug/kg	C U
Benzo(g,h,i)perylene	400.000	ug/kg	C U	410.000	ug/kg	C U	130.000	ug/kg	C J
Benzo(k)fluoranthene	400.000	ug/kg	C U	410.000	ug/kg	C U	440.000	ug/kg	C U
Benzoic acid	28.000	ug/kg	C R	45.000	ug/kg	C J	57.000	ug/kg	C R
Benzyl alcohol	400.000	ug/kg	C UJ	410.000	ug/kg	C U	440.000	ug/kg	C U
Butyl benzyl phthalate	400.000	ug/kg	C U	410.000	ug/kg	C U	440.000	ug/kg	C U
Carbazole	7.000	ug/kg	C J	410.000	ug/kg	C U	440.000	ug/kg	C U
Chrysene	400.000	ug/kg	C U	410.000	ug/kg	C U	440.000	ug/kg	C U
Di-n-butyl phthalate	400.000	ug/kg	C U	410.000	ug/kg	C U	440.000	ug/kg	C U
Di-n-octyl phthalate	2.000	ug/kg	C J	410.000	ug/kg	C U	440.000	ug/kg	C UJ
Dibenzo(a,h)anthracene	400.000	ug/kg	C U	410.000	ug/kg	C U	440.000	ug/kg	C UJ
Dibenzofuran	400.000	ug/kg	C U	410.000	ug/kg	C U	440.000	ug/kg	C U
Diethyl phthalate	14.000	ug/kg	C U	410.000	ug/kg	C U	440.000	ug/kg	C U
Dimethyl phthalate	400.000	ug/kg	C U	410.000	ug/kg	C U	440.000	ug/kg	C U
Fluoranthene	400.000	ug/kg	C U	410.000	ug/kg	C U	66.000	ug/kg	C J
Fluorene	400.000	ug/kg	C U	410.000	ug/kg	C U	440.000	ug/kg	C U
Hexachlorobenzene	400.000	ug/kg	C U	410.000	ug/kg	C U	440.000	ug/kg	C U
Hexachlorobutadiene	400.000	ug/kg	C U	410.000	ug/kg	C U	440.000	ug/kg	C U
Hexachlorocyclopentadiene	400.000	ug/kg	C UJ	410.000	ug/kg	C U	440.000	ug/kg	C UJ
Hexachloroethane	400.000	ug/kg	C U	410.000	ug/kg	C U	440.000	ug/kg	C U
Indeno(1,2,3-cd)pyrene	400.000	ug/kg	C U	410.000	ug/kg	C U	440.000	ug/kg	C U
Isophorone	400.000	ug/kg	C U	410.000	ug/kg	C U	440.000	ug/kg	C U
N-Nitroso-di-n-propylamine	400.000	ug/kg	C U	410.000	ug/kg	C U	440.000	ug/kg	C U
N-Nitrosodiphenylamine	400.000	ug/kg	C U	410.000	ug/kg	C U	440.000	ug/kg	C U
Naphthalene	400.000	ug/kg	C U	410.000	ug/kg	C U	440.000	ug/kg	C U
Nitrobenzene	400.000	ug/kg	C U	410.000	ug/kg	C U	440.000	ug/kg	C U
Pentachlorophenol	1900.000	ug/kg	C U	1000.000	ug/kg	C U	2100.000	ug/kg	C UJ
Phenanthrene	400.000	ug/kg	C U	410.000	ug/kg	C U	440.000	ug/kg	C U
Phenol	24.000	ug/kg	C J	410.000	ug/kg	C U	440.000	ug/kg	C U

0186
5174

TABLE E-9
(Continued)

PHASE II - CHEMICAL PARAMETERS

BORING NUMBER	IFP-SD-02			IFP-SD-03			IFP-SD-03		
SAMPLE NUMBER	111812			116219			111813		
	0-0.5						0-0.5		
SAMPLING DATE	04/17/93			05/01/93			04/17/93		
CHEMICAL PARAMETERS	RESULTS	UNITS	L VQ	RESULTS	UNITS	L VQ	RESULTS	UNITS	L VQ
Semivolatile Organics									
Pyrene	400.000	ug/kg	C U	410.000	ug/kg	C U	47.000	ug/kg	C J
bis(2-Chloroethoxy)methane	400.000	ug/kg	C U	410.000	ug/kg	C U	440.000	ug/kg	C U
bis(2-Chloroethyl)ether	400.000	ug/kg	C U	410.000	ug/kg	C U	440.000	ug/kg	C U
bis(2-Chloroisopropyl) ether	400.000	ug/kg	C U	410.000	ug/kg	C U	440.000	ug/kg	C UJ
bis(2-Ethylhexyl) phthalate	59.000	ug/kg	C J	2200.000	ug/kg	C -	51.000	ug/kg	C J
p-Chloroaniline	400.000	ug/kg	C U	410.000	ug/kg	C U	440.000	ug/kg	C U
Pesticide Organics/PCBs									
4,4'-DDD	4.000	ug/kg	C U	4.300	ug/kg	C U	4.400	ug/kg	C U
4,4'-DDE	4.000	ug/kg	C U	4.300	ug/kg	C U	4.400	ug/kg	C U
4,4'-DDT	4.000	ug/kg	C U	4.300	ug/kg	C U	4.400	ug/kg	C U
Aldrin	2.000	ug/kg	C U	2.200	ug/kg	C U	2.300	ug/kg	C U
Aroclor-1016	40.000	ug/kg	C U	43.000	ug/kg	C UJ	44.000	ug/kg	C U
Aroclor-1221	80.000	ug/kg	C U	87.000	ug/kg	C UJ	90.000	ug/kg	C U
Aroclor-1232	40.000	ug/kg	C U	43.000	ug/kg	C UJ	44.000	ug/kg	C U
Aroclor-1242	40.000	ug/kg	C U	43.000	ug/kg	C UJ	44.000	ug/kg	C U
Aroclor-1248	40.000	ug/kg	C U	43.000	ug/kg	C UJ	44.000	ug/kg	C U
Aroclor-1254	40.000	ug/kg	C U	43.000	ug/kg	C UJ	44.000	ug/kg	C U
Aroclor-1260	40.000	ug/kg	C U	43.000	ug/kg	C UJ	44.000	ug/kg	C U
Dieldrin	4.000	ug/kg	C U	4.300	ug/kg	C U	4.400	ug/kg	C U
Endosulfan II	4.000	ug/kg	C U	4.300	ug/kg	C U	4.400	ug/kg	C U
Endosulfan sulfate	4.000	ug/kg	C U	4.300	ug/kg	C U	4.400	ug/kg	C U
Endosulfan-I	2.000	ug/kg	C U	2.200	ug/kg	C U	2.300	ug/kg	C U
Endrin	4.000	ug/kg	C U	4.300	ug/kg	C U	4.400	ug/kg	C U
Endrin aldehyde	4.000	ug/kg	C U	4.300	ug/kg	C U	4.400	ug/kg	C U
Endrin ketone	4.000	ug/kg	C U	4.300	ug/kg	C U	4.400	ug/kg	C U
Heptachlor	2.000	ug/kg	C U	2.200	ug/kg	C U	2.300	ug/kg	C U
Heptachlor epoxide	2.000	ug/kg	C U	2.200	ug/kg	C U	2.300	ug/kg	C U
Methoxychlor	20.000	ug/kg	C U	22.000	ug/kg	C U	23.000	ug/kg	C U
Toxaphene	200.000	ug/kg	C U	220.000	ug/kg	C UJ	230.000	ug/kg	C U
alpha-BHC	2.000	ug/kg	C U	2.200	ug/kg	C U	2.300	ug/kg	C U
alpha-Chlordane	2.000	ug/kg	C U	2.200	ug/kg	C U	2.300	ug/kg	C U
beta-BHC	2.000	ug/kg	C U	2.200	ug/kg	C U	2.300	ug/kg	C U
delta-BHC	2.000	ug/kg	C U	2.200	ug/kg	C U	2.300	ug/kg	C U
gamma-BHC (Lindane)	2.000	ug/kg	C U	2.200	ug/kg	C U	2.300	ug/kg	C U
gamma-Chlordane	2.000	ug/kg	C U	2.200	ug/kg	C U	2.300	ug/kg	C U

TABLE E-9
(Continued)

PHASE II - CHEMICAL PARAMETERS

BORING NUMBER	IFP-SD-04			IFP-SD-04			IFP-SD-02		
SAMPLE NUMBER	111815			112017			112021		
	0-0.5			0-0.5			0-0.5		
SAMPLING DATE	04/17/93			04/29/93			04/30/93		
CHEMICAL PARAMETERS	RESULTS	UNITS	L VQ	RESULTS	UNITS	L VQ	RESULTS	UNITS	L VQ
Inorganics									
Aluminum	5120.000	mg/kg	C -	1580.000	mg/kg	C -	3130.000	mg/kg	D -
Antimony	1.000	mg/kg	C UJ	0.450	mg/kg	C UJ	0.360	mg/kg	D UJ
Arsenic	3.600	mg/kg	C -	2.400	mg/kg	C J	1.700	mg/kg	D J
Barium	40.800	mg/kg	C -	17.100	mg/kg	C J	16.500	mg/kg	D J
Beryllium	0.410	mg/kg	C U	0.240	mg/kg	C U	0.240	mg/kg	D U
Cadmium	1.000	mg/kg	C U	0.480	mg/kg	C U	0.670	mg/kg	D -
Calcium	75200.000	mg/kg	C -	56000.000	mg/kg	C J	105000.000	mg/kg	D J
Chromium	6.200	mg/kg	C -	3.700	mg/kg	C -	4.900	mg/kg	D -
Cobalt	4.200	mg/kg	C -	1.800	mg/kg	C -	3.100	mg/kg	D -
Copper	8.800	mg/kg	C -	5.500	mg/kg	C U	9.300	mg/kg	D -
Cyanide	0.140	mg/kg	C U	0.120	mg/kg	C UJ	0.160	mg/kg	D J
Iron	9970.000	mg/kg	C -	4260.000	mg/kg	C J	8110.000	mg/kg	D J
Lead	22.400	mg/kg	C -	5.000	mg/kg	C J	4.100	mg/kg	D J
Magnesium	17700.000	mg/kg	C -	13500.000	mg/kg	C -	22500.000	mg/kg	D -
Manganese	429.000	mg/kg	C -	253.000	mg/kg	C J	327.000	mg/kg	D J
Mercury	0.100	mg/kg	C U	0.120	mg/kg	C U	0.110	mg/kg	D U
Molybdenum	4.100	mg/kg	C U	0.910	mg/kg	C U	2.200	mg/kg	D U
Nickel	9.200	mg/kg	C -	4.400	mg/kg	C -	6.600	mg/kg	D -
Potassium	687.000	mg/kg	C -	253.000	mg/kg	C J	812.000	mg/kg	D J
Selenium	0.380	mg/kg	C U	0.240	mg/kg	C UJ	0.230	mg/kg	D UJ
Silicon	496.000	mg/kg	C -	642.000	mg/kg	C J	805.000	mg/kg	D J
Silver	2.100	mg/kg	C U	0.480	mg/kg	C U	0.480	mg/kg	D U
Sodium	130.000	mg/kg	C -	120.000	mg/kg	C -	175.000	mg/kg	D -
Thallium	0.380	mg/kg	C U	0.240	mg/kg	C U	0.230	mg/kg	D U
Vanadium	14.100	mg/kg	C -	8.000	mg/kg	C UJ	12.500	mg/kg	D J
Zinc	32.100	mg/kg	C -	12.700	mg/kg	C UJ	29.000	mg/kg	D J
Volatile Organics									
1,1,1-Trichloroethane	14.000	ug/kg	C U	14.000	ug/kg	C U	13.000	ug/kg	D U
1,1,2,2-Tetrachloroethane	14.000	ug/kg	C U	14.000	ug/kg	C U	13.000	ug/kg	D U
1,1,2-Trichloroethane	14.000	ug/kg	C U	14.000	ug/kg	C U	13.000	ug/kg	D U
1,1-Dichloroethane	14.000	ug/kg	C U	14.000	ug/kg	C U	13.000	ug/kg	D U
1,1-Dichloroethene	14.000	ug/kg	C U	14.000	ug/kg	C U	13.000	ug/kg	D U
1,2-Dichloroethane	14.000	ug/kg	C U	14.000	ug/kg	C U	13.000	ug/kg	D U
1,2-Dichloroethene	14.000	ug/kg	C U	14.000	ug/kg	C U	13.000	ug/kg	D U
1,2-Dichloropropane	14.000	ug/kg	C U	14.000	ug/kg	C U	13.000	ug/kg	D U
2-Butanone	14.000	ug/kg	C U	14.000	ug/kg	C U	13.000	ug/kg	D U
2-Hexanone	14.000	ug/kg	C UJ	14.000	ug/kg	C U	13.000	ug/kg	D U
4-Methyl-2-pentanone	14.000	ug/kg	C U	14.000	ug/kg	C U	13.000	ug/kg	D U
Acetone	12.000	ug/kg	C J	22.000	ug/kg	C -	13.000	ug/kg	D U
Benzene	14.000	ug/kg	C U	14.000	ug/kg	C U	13.000	ug/kg	D U

0188

TABLE E-9
(Continued)

PHASE II - CHEMICAL PARAMETERS

BORING NUMBER	IFP-SD-04			IFP-SD-04			IFP-SD-02		
SAMPLE NUMBER	111815			112017			112021		
	0-0.5			0-0.5			0-0.5		
SAMPLING DATE	04/17/93			04/29/93			04/30/93		
CHEMICAL PARAMETERS	RESULTS	UNITS	L VQ	RESULTS	UNITS	L VQ	RESULTS	UNITS	L VQ
Volatile Organics									
Bromodichloromethane	14.000	ug/kg	C U	14.000	ug/kg	C U	13.000	ug/kg	D U
Bromoform	14.000	ug/kg	C U	14.000	ug/kg	C U	13.000	ug/kg	D U
Bromomethane	14.000	ug/kg	C UJ	14.000	ug/kg	C UJ	13.000	ug/kg	D UJ
Carbon Tetrachloride	14.000	ug/kg	C U	14.000	ug/kg	C U	13.000	ug/kg	D U
Carbon disulfide	14.000	ug/kg	C U	14.000	ug/kg	C U	13.000	ug/kg	D U
Chlorobenzene	14.000	ug/kg	C U	14.000	ug/kg	C U	13.000	ug/kg	D U
Chloroethane	14.000	ug/kg	C U	14.000	ug/kg	C UJ	13.000	ug/kg	D UJ
Chloroform	14.000	ug/kg	C U	14.000	ug/kg	C U	13.000	ug/kg	D U
Chloromethane	14.000	ug/kg	C U	14.000	ug/kg	C U	13.000	ug/kg	D U
Dibromochloromethane	14.000	ug/kg	C U	14.000	ug/kg	C U	13.000	ug/kg	D U
Ethylbenzene	14.000	ug/kg	C U	14.000	ug/kg	C U	13.000	ug/kg	D U
Methylene chloride	22.000	ug/kg	C U	14.000	ug/kg	C U	13.000	ug/kg	D U
Styrene	14.000	ug/kg	C U	14.000	ug/kg	C U	13.000	ug/kg	D U
Tetrachloroethene	14.000	ug/kg	C U	14.000	ug/kg	C U	13.000	ug/kg	D U
Toluene	14.000	ug/kg	C U	14.000	ug/kg	C U	13.000	ug/kg	D U
Trichloroethene	14.000	ug/kg	C U	14.000	ug/kg	C U	13.000	ug/kg	D U
Vinyl Acetate	14.000	ug/kg	C UJ	NA			NA		
Vinyl chloride	14.000	ug/kg	C U	14.000	ug/kg	C U	13.000	ug/kg	D U
Xylenes, Total	14.000	ug/kg	C U	14.000	ug/kg	C U	13.000	ug/kg	D U
cis-1,3-Dichloropropene	14.000	ug/kg	C U	14.000	ug/kg	C U	13.000	ug/kg	D U
trans-1,3-Dichloropropene	14.000	ug/kg	C U	14.000	ug/kg	C U	13.000	ug/kg	D U
Semivolatile Organics									
1,2,4-Trichlorobenzene	460.000	ug/kg	C U	410.000	ug/kg	C UJ	400.000	ug/kg	D UJ
1,2-Dichlorobenzene	460.000	ug/kg	C U	410.000	ug/kg	C U	400.000	ug/kg	D U
1,3-Dichlorobenzene	460.000	ug/kg	C U	410.000	ug/kg	C U	400.000	ug/kg	D U
1,4-Dichlorobenzene	460.000	ug/kg	C U	410.000	ug/kg	C U	400.000	ug/kg	D U
2,4,5-Trichlorophenol	2200.000	ug/kg	C U	990.000	ug/kg	C U	960.000	ug/kg	D U
2,4,6-Trichlorophenol	460.000	ug/kg	C U	410.000	ug/kg	C U	400.000	ug/kg	D U
2,4-Dichlorophenol	460.000	ug/kg	C U	410.000	ug/kg	C U	400.000	ug/kg	D U
2,4-Dimethylphenol	460.000	ug/kg	C U	410.000	ug/kg	C U	400.000	ug/kg	D U
2,4-Dinitrophenol	2200.000	ug/kg	C R	990.000	ug/kg	C UJ	960.000	ug/kg	D UJ
2,4-Dinitrotoluene	460.000	ug/kg	C U	410.000	ug/kg	C U	400.000	ug/kg	D U
2,6-Dinitrotoluene	460.000	ug/kg	C U	410.000	ug/kg	C U	400.000	ug/kg	D U
2-Chloronaphthalene	460.000	ug/kg	C U	410.000	ug/kg	C U	400.000	ug/kg	D U
2-Chlorophenol	460.000	ug/kg	C U	410.000	ug/kg	C U	400.000	ug/kg	D U
2-Methylnaphthalene	460.000	ug/kg	C U	410.000	ug/kg	C U	400.000	ug/kg	D U
2-Methylphenol	460.000	ug/kg	C U	410.000	ug/kg	C UJ	400.000	ug/kg	D UJ
2-Nitroaniline	2200.000	ug/kg	C U	990.000	ug/kg	C U	960.000	ug/kg	D U
2-Nitrophenol	460.000	ug/kg	C U	410.000	ug/kg	C U	400.000	ug/kg	D U
3,3'-Dichlorobenzidine	460.000	ug/kg	C U	410.000	ug/kg	C U	400.000	ug/kg	D U

0189

TABLE E-9
(Continued)

PHASE II - CHEMICAL PARAMETERS

BORING NUMBER	IFP-SD-04			IFP-SD-04			IFP-SD-02		
SAMPLE NUMBER	111815			112017			112021		
	0-0.5			0-0.5			0-0.5		
SAMPLING DATE	04/17/93			04/29/93			04/30/93		
CHEMICAL PARAMETERS	RESULTS	UNITS	L VQ	RESULTS	UNITS	L VQ	RESULTS	UNITS	L VQ
Semivolatile Organics									
3-Nitroaniline	2200.000	ug/kg	C U	990.000	ug/kg	C UJ	960.000	ug/kg	D UJ
4,6-Dinitro-2-methylphenol	2200.000	ug/kg	C R	990.000	ug/kg	C U	960.000	ug/kg	D U
4-Bromophenyl phenyl ether	460.000	ug/kg	C U	410.000	ug/kg	C U	400.000	ug/kg	D U
4-Chloro-3-methylphenol	460.000	ug/kg	C U	410.000	ug/kg	C U	400.000	ug/kg	D U
4-Chlorophenylphenyl ether	460.000	ug/kg	C U	410.000	ug/kg	C U	400.000	ug/kg	D U
4-Methylphenol	190.000	ug/kg	C J	410.000	ug/kg	C UJ	400.000	ug/kg	D UJ
4-Nitroaniline	2200.000	ug/kg	C U	990.000	ug/kg	C R	960.000	ug/kg	D R
4-Nitrophenol	2200.000	ug/kg	C UJ	990.000	ug/kg	C U	960.000	ug/kg	D U
Acenaphthene	460.000	ug/kg	C U	410.000	ug/kg	C U	400.000	ug/kg	D U
Acenaphthylene	460.000	ug/kg	C U	410.000	ug/kg	C U	400.000	ug/kg	D U
Anthracene	67.000	ug/kg	C J	410.000	ug/kg	C U	400.000	ug/kg	D U
Benzo(a)anthracene	48.000	ug/kg	C J	410.000	ug/kg	C U	400.000	ug/kg	D U
Benzo(a)pyrene	60.000	ug/kg	C J	410.000	ug/kg	C U	400.000	ug/kg	D U
Benzo(b)fluoranthene	39.000	ug/kg	C J	410.000	ug/kg	C U	400.000	ug/kg	D U
Benzo(g,h,i)perylene	38.000	ug/kg	C J	410.000	ug/kg	C U	400.000	ug/kg	D U
Benzo(k)fluoranthene	53.000	ug/kg	C J	410.000	ug/kg	C UJ	400.000	ug/kg	D UJ
Benzoic acid	150.000	ug/kg	C R	2000.000	ug/kg	C U	1900.000	ug/kg	D U
Benzyl alcohol	460.000	ug/kg	C UJ	410.000	ug/kg	C U	400.000	ug/kg	D U
Butyl benzyl phthalate	460.000	ug/kg	C U	410.000	ug/kg	C U	400.000	ug/kg	D U
Carbazole	7.000	ug/kg	C J	410.000	ug/kg	C U	400.000	ug/kg	D U
Chrysene	61.000	ug/kg	C J	410.000	ug/kg	C U	400.000	ug/kg	D U
Di-n-butyl phthalate	460.000	ug/kg	C U	410.000	ug/kg	C U	400.000	ug/kg	D U
Di-n-octyl phthalate	7.000	ug/kg	C J	410.000	ug/kg	C U	400.000	ug/kg	D U
Dibenzo(a,h)anthracene	460.000	ug/kg	C U	410.000	ug/kg	C U	400.000	ug/kg	D U
Dibenzofuran	460.000	ug/kg	C U	410.000	ug/kg	C U	400.000	ug/kg	D U
Diethyl phthalate	14.000	ug/kg	C J	410.000	ug/kg	C UJ	400.000	ug/kg	D UJ
Dimethyl phthalate	460.000	ug/kg	C U	410.000	ug/kg	C U	400.000	ug/kg	D U
Fluoranthene	120.000	ug/kg	C J	410.000	ug/kg	C U	400.000	ug/kg	D U
Fluorene	7.000	ug/kg	C J	410.000	ug/kg	C U	400.000	ug/kg	D U
Hexachlorobenzene	460.000	ug/kg	C U	410.000	ug/kg	C U	400.000	ug/kg	D U
Hexachlorobutadiene	460.000	ug/kg	C U	410.000	ug/kg	C R	400.000	ug/kg	D R
Hexachlorocyclopentadiene	460.000	ug/kg	C UJ	410.000	ug/kg	C U	400.000	ug/kg	D U
Hexachloroethane	460.000	ug/kg	C U	410.000	ug/kg	C U	400.000	ug/kg	D U
Indeno(1,2,3-cd)pyrene	35.000	ug/kg	C J	410.000	ug/kg	C U	400.000	ug/kg	D U
Isophorone	460.000	ug/kg	C U	410.000	ug/kg	C U	400.000	ug/kg	D U
N-Nitroso-di-n-propylamine	460.000	ug/kg	C U	410.000	ug/kg	C U	400.000	ug/kg	D U
N-Nitrosodiphenylamine	460.000	ug/kg	C U	410.000	ug/kg	C U	400.000	ug/kg	D U
Naphthalene	460.000	ug/kg	C U	410.000	ug/kg	C U	400.000	ug/kg	D U
Nitrobenzene	460.000	ug/kg	C U	410.000	ug/kg	C U	400.000	ug/kg	D U
Pentachlorophenol	2200.000	ug/kg	C U	990.000	ug/kg	C U	960.000	ug/kg	D U
Phenanthrene	67.000	ug/kg	C J	410.000	ug/kg	C U	400.000	ug/kg	D U
Phenol	42.000	ug/kg	C J	410.000	ug/kg	C U	400.000	ug/kg	D U

0190

5174

TABLE E-9
(Continued)

PHASE II - CHEMICAL PARAMETERS

BORING NUMBER	IFP-SD-04			IFP-SD-04			IFP-SD-02		
SAMPLE NUMBER	111815			112017			112021		
	0-0.5			0-0.5			0-0.5		
SAMPLING DATE	04/17/93			04/29/93			04/30/93		
CHEMICAL PARAMETERS	RESULTS	UNITS	L VQ	RESULTS	UNITS	L VQ	RESULTS	UNITS	L VQ
Semivolatile Organics									
Pyrene	100.000	ug/kg	C J	410.000	ug/kg	C U	400.000	ug/kg	D U
bis(2-Chloroethoxy)methane	460.000	ug/kg	C U	410.000	ug/kg	C U	400.000	ug/kg	D U
bis(2-Chloroethyl)ether	460.000	ug/kg	C U	410.000	ug/kg	C U	400.000	ug/kg	D U
bis(2-Chloroisopropyl) ether	460.000	ug/kg	C U	410.000	ug/kg	C UJ	400.000	ug/kg	D UJ
bis(2-Ethylhexyl) phthalate	70.000	ug/kg	C J	700.000	ug/kg	C -	1200.000	ug/kg	D -
p-Chloroaniline	460.000	ug/kg	C U	410.000	ug/kg	C U	400.000	ug/kg	D U
Pesticide Organics/PCBs									
4,4'-DDD	4.600	ug/kg	C U	4.100	ug/kg	C U	3.900	ug/kg	D U
4,4'-DDE	4.600	ug/kg	C U	4.100	ug/kg	C U	3.900	ug/kg	D U
4,4'-DDT	4.600	ug/kg	C U	4.100	ug/kg	C U	3.900	ug/kg	D U
Aldrin	2.400	ug/kg	C U	2.100	ug/kg	C U	2.000	ug/kg	D U
Aroclor-1016	46.000	ug/kg	C U	41.000	ug/kg	C UJ	39.000	ug/kg	D UJ
Aroclor-1221	93.000	ug/kg	C U	84.000	ug/kg	C UJ	80.000	ug/kg	D UJ
Aroclor-1232	46.000	ug/kg	C U	41.000	ug/kg	C UJ	39.000	ug/kg	D UJ
Aroclor-1242	46.000	ug/kg	C U	41.000	ug/kg	C UJ	39.000	ug/kg	D UJ
Aroclor-1248	46.000	ug/kg	C U	41.000	ug/kg	C UJ	39.000	ug/kg	D UJ
Aroclor-1254	46.000	ug/kg	C U	41.000	ug/kg	C UJ	39.000	ug/kg	D UJ
Aroclor-1260	46.000	ug/kg	C U	41.000	ug/kg	C UJ	39.000	ug/kg	D UJ
Dieldrin	4.600	ug/kg	C U	4.100	ug/kg	C U	3.900	ug/kg	D U
Endosulfan II	4.600	ug/kg	C U	4.100	ug/kg	C U	3.900	ug/kg	D U
Endosulfan sulfate	4.600	ug/kg	C U	4.100	ug/kg	C U	3.900	ug/kg	D U
Endosulfan-I	2.400	ug/kg	C U	2.100	ug/kg	C U	2.000	ug/kg	D U
Endrin	4.600	ug/kg	C U	4.100	ug/kg	C U	3.900	ug/kg	D U
Endrin aldehyde	4.600	ug/kg	C U	4.100	ug/kg	C U	3.900	ug/kg	D U
Endrin ketone	4.600	ug/kg	C U	4.100	ug/kg	C U	3.900	ug/kg	D U
Heptachlor	2.400	ug/kg	C U	2.100	ug/kg	C U	2.000	ug/kg	D U
Heptachlor epoxide	2.400	ug/kg	C U	2.100	ug/kg	C U	2.000	ug/kg	D U
Methoxychlor	24.000	ug/kg	C U	21.000	ug/kg	C UJ	20.000	ug/kg	D UJ
Toxaphene	240.000	ug/kg	C U	210.000	ug/kg	C UJ	200.000	ug/kg	D UJ
alpha-BHC	2.400	ug/kg	C U	2.100	ug/kg	C U	2.000	ug/kg	D U
alpha-Chlordane	2.400	ug/kg	C U	2.100	ug/kg	C U	2.000	ug/kg	D U
beta-BHC	2.400	ug/kg	C U	2.100	ug/kg	C U	2.000	ug/kg	D U
delta-BHC	2.400	ug/kg	C U	2.100	ug/kg	C U	2.000	ug/kg	D U
gamma-BHC (Lindane)	2.400	ug/kg	C U	2.100	ug/kg	C U	2.000	ug/kg	D U
gamma-Chlordane	2.400	ug/kg	C U	2.100	ug/kg	C U	2.000	ug/kg	D U

TABLE E-10

INACTIVE FLYASH PILE
CIS ON-SITE LABORATORY SEDIMENT RESULTS
OPERABLE UNIT 2 REMEDIAL INVESTIGATION
FERNALD ENVIRONMENTAL MANAGEMENT PROJECT

SAMPLE ID: FMP-SD-53-001
EAST COORDINATE (FEET): 1378833.00
NORTH COORDINATE (FEET): 478016.00

Radionuclide[a]	Qualifier[b]	Begin - End Depth (feet)	Activity Concentration (pCi/g, dry)	Uncertainty (pCi/g, dry)
Cesium-137		0.00 - 0.50	0.50	0.20
Radium-226		0.00 - 0.50	1.40	0.50
Ruthenium-106	<	0.00 - 0.50	10.70	NA[c]
Thorium-232		0.00 - 0.50	1.10	0.60
Uranium-238		0.00 - 0.50	8.90	3.40

SAMPLE ID: FMP-SD-53-002
EAST COORDINATE (FEET): 1378831.00
NORTH COORDINATE (FEET): 478014.00

Radionuclide	Qualifier	Begin - End Depth (feet)	Activity Concentration (pCi/g, dry)	Uncertainty (pCi/g, dry)
Cesium-137	<	0.00 - 0.50	1.40	NA
Radium-226		0.00 - 0.50	0.80	0.30
Ruthenium-106	<	0.00 - 0.50	8.60	NA
Thorium-232	<	0.00 - 0.50	0.50	NA
Uranium-238		0.00 - 0.50	4.00	3.10

[a]RA-226 when reported, were measured by gamma spectrometry and reported on a dry weight basis.

[b]Qualifiers are from the laboratory. No validation qualifiers were available. < = less than.

[c]Not Applicable

0192

TABLE E-11

INACTIVE FLYASH PILE
RI/FS SURFACE WATER RESULTS
OPERABLE UNIT 2 REMEDIAL INVESTIGATION
FERNALD ENVIRONMENTAL MANAGEMENT PROJECT

PHASE I - RADIOLOGICAL PARAMETERS

BORING NUMBER		ASIT-009				ASIT-009				W-11			
SAMPLE NUMBER		001174				001175				001107			
SAMPLING DATE		03/30/89				03/30/89				01/12/89			
RADIOLOGICAL PARAMETERS	FLTD	RESULTS	UNITS	VQ	FLTD	RESULTS	UNITS	VQ	FLTD	RESULTS	UNITS	VQ
CS-137		NA				NA			FILT	20.000	pci/L	R
CS-137		NA				NA			UNFI	20.000	pci/L	R
GROSS ALPHA	FILT	23.000	pci/L	NV		NA				NA		
GROSS ALPHA		NA			UNFI	19.000	pci/L	NV		NA		
GROSS BETA	FILT	14.000	pci/L	NV		NA				NA		
GROSS BETA		NA			UNFI	20.000	pci/L	NV		NA		
NP-237		NA				NA			FILT	1.000	pci/L	U
NP-237		NA				NA			UNFI	1.000	pci/L	U
PU-238		NA				NA			FILT	1.000	pci/L	U
PU-238		NA				NA			UNFI	1.000	pci/L	U
PU-239/240		NA				NA			FILT	1.000	pci/L	U
PU-239/240		NA				NA			UNFI	1.000	pci/L	U
RA-226	FILT	1.000	pci/L	U		NA			FILT	1.000	pci/L	R
RA-226		NA			UNFI	1.000	pci/L	U	UNFI	1.000	pci/L	R
RA-228	FILT	3.000	pci/L	UJ		NA			FILT	3.000	pci/L	UJ
RA-228		NA			UNFI	3.000	pci/L	UJ	UNFI	3.000	pci/L	UJ
RU-106		NA				NA			FILT	150.000	pci/L	R
RU-106		NA				NA			UNFI	150.000	pci/L	R
SR-90		NA				NA			FILT	5.000	pci/L	U
SR-90		NA				NA			UNFI	5.000	pci/L	U
TC-99		NA				NA			FILT	30.000	pci/L	U
TC-99		NA				NA			UNFI	30.000	pci/L	U
TH-228		NA				NA			FILT	1.000	pci/L	U
TH-228		NA				NA			UNFI	1.000	pci/L	U
TH-230		NA				NA			FILT	1.000	pci/L	U
TH-230		NA				NA			UNFI	1.000	pci/L	U
TH-232		NA				NA			FILT	1.000	pci/L	U
TH-232		NA				NA			UNFI	1.000	pci/L	U
U-234		NA				NA			FILT	3.200	pci/L	-
U-234		NA				NA			UNFI	5.000	pci/L	-
U-235/236		NA				NA			FILT	1.000	pci/L	U
U-235/236		NA				NA			UNFI	1.000	pci/L	U
U-238		NA				NA			FILT	6.200	pci/L	-
U-238		NA				NA			UNFI	6.800	pci/L	-
U-TOTAL	FILT	32.000	ug/L	-		NA			FILT	17.000	ug/L	R
U-TOTAL		NA			UNFI	40.000	ug/L	-	UNFI	19.000	ug/L	R

5174

TABLE E-11
(Continued)

PHASE I - RADIOLOGICAL PARAMETERS

BORING NUMBER		W-11				W-11				W-11			
SAMPLE NUMBER		001208				001209				001247			
SAMPLING DATE		05/14/89				05/14/89				07/15/90			
RADIOLOGICAL PARAMETERS	FLTD	RESULTS	UNITS	VQ	FLTD	RESULTS	UNITS	VQ	FLTD	RESULTS	UNITS	VQ
CS-137	FILT	20.000	pci/L	R		NA				NA		
CS-137		NA			UNFI	20.000	pci/L	R		NA		
NP-237	FILT	1.000	pci/L	U		NA				NA		
NP-237		NA			UNFI	1.000	pci/L	U		NA		
NP-237		NA				NA			UNKN	1.000	pci/L	U
PU-238	FILT	1.000	pci/L	U		NA				NA		
PU-238		NA			UNFI	1.000	pci/L	U		NA		
PU-238		NA				NA			UNKN	1.000	pci/L	U
PU-239/240	FILT	1.000	pci/L	U		NA				NA		
PU-239/240		NA			UNFI	1.000	pci/L	U		NA		
PU-239/240		NA				NA			UNKN	1.000	pci/L	U
RA-226	FILT	1.000	pci/L	U		NA				NA		
RA-226		NA			UNFI	1.000	pci/L	U		NA		
RA-226		NA				NA			UNKN	1.000	pci/L	U
RA-228	FILT	3.000	pci/L	UJ		NA				NA		
RA-228		NA			UNFI	3.000	pci/L	UJ		NA		
RA-228		NA				NA			UNKN	3.000	pci/L	U
RU-106	FILT	150.000	pci/L	R		NA				NA		
RU-106		NA			UNFI	150.000	pci/L	R		NA		
SR-90	FILT	5.000	pci/L	U		NA				NA		
SR-90		NA			UNFI	5.000	pci/L	U		NA		
SR-90		NA				NA			UNKN	5.000	pci/L	U
TC-99	FILT	30.000	pci/L	UJ		NA				NA		
TC-99		NA			UNFI	30.000	pci/L	UJ		NA		
TC-99		NA				NA			UNKN	30.000	pci/L	UJ
TH-228	FILT	1.000	pci/L	UJ		NA				NA		
TH-228		NA			UNFI	1.000	pci/L	UJ		NA		
TH-228		NA				NA			UNKN	1.000	pci/L	U
TH-230	FILT	1.000	pci/L	UJ		NA				NA		
TH-230		NA			UNFI	1.000	pci/L	UJ		NA		
TH-230		NA				NA			UNKN	6.740	pci/L	J
TH-232	FILT	1.000	pci/L	UJ		NA				NA		
TH-232		NA			UNFI	1.000	pci/L	UJ		NA		
TH-232		NA				NA			UNKN	1.000	pci/L	UJ
TH-TOTAL	FILT	5.000	ug/L	UJ		NA				NA		
TH-TOTAL		NA			UNFI	6.000	ug/L	UJ		NA		
TH-TOTAL		NA				NA			UNKN	3.580	ug/L	J
U-234	FILT	2.200	pci/L	-		NA				NA		
U-234		NA			UNFI	2.500	pci/L	-		NA		
U-234		NA				NA			UNKN	4.260	pci/L	-
U-235/236	FILT	1.000	pci/L	U		NA				NA		
U-235/236		NA			UNFI	1.000	pci/L	U		NA		

TABLE E-11
(Continued)

PHASE I - RADIOLOGICAL PARAMETERS

BORING NUMBER		W-11				W-11				W-11			
SAMPLE NUMBER		001208				001209				001247			
SAMPLING DATE		05/14/89				05/14/89				07/15/90			
RADIOLOGICAL PARAMETERS	FLTD	RESULTS	UNITS	VQ	FLTD	RESULTS	UNITS	VQ	FLTD	RESULTS	UNITS	VQ
U-235/236		NA				NA			UNKN	1.000	pci/L	U
U-238	FILT	2.800	pci/L	-		NA				NA		
U-238		NA			UNFI	2.600	pci/L	-		NA		
U-238		NA				NA			UNKN	3.660	pci/L	-
U-TOTAL	FILT	9.000	ug/L	-		NA				NA		
U-TOTAL		NA			UNFI	9.000	ug/L	-		NA		

0195

5174

TABLE E-11
(Continued)

PHASE I - RADIOLOGICAL PARAMETERS

BORING NUMBER		W-11		
SAMPLE NUMBER		001248		
SAMPLING DATE		07/15/90		
RADIOLOGICAL PARAMETERS	FLTD	RESULTS	UNITS	VQ
NP-237	UNKN	1.000	pci/L	U
PU-238	UNKN	1.000	pci/L	U
PU-239/240	UNKN	1.000	pci/L	U
RA-226	UNKN	1.000	pci/L	U
RA-228	UNKN	3.000	pci/L	U
SR-90	UNKN	24.000	pci/L	-
TC-99	UNKN	30.000	pci/L	UJ
TH-228	UNKN	1.000	pci/L	U
TH-230	UNKN	2.810	pci/L	J
TH-232	UNKN	1.000	pci/L	UJ
TH-TOTAL	UNKN	3.300	ug/L	U
U-234	UNKN	3.680	pci/L	-
U-235/236	UNKN	1.000	pci/L	U
U-238	UNKN	3.500	pci/L	-

TABLE E-11
(Continued)

PHASE I - CHEMICAL PARAMETERS

BORING NUMBER		ASIT-009				W-11				W-11			
SAMPLE NUMBER		001175				001107				001209			
SAMPLING DATE		03/30/89				01/12/89				05/14/89			
CHEMICAL PARAMETERS	FLTD	RESULTS	UNITS	L	VQ	FLTD	RESULTS	UNITS	L VQ	FLTD	RESULTS	UNITS	L VQ
Inorganics													
Aluminum		NA					NA			UNKN	0.076	mg/L	C J
Arsenic	UNKN	0.002	mg/L	C	UJ		NA			UNKN	0.002	mg/L	C U
Barium	UNKN	0.027	mg/L	C	J		NA			UNKN	0.031	mg/L	C J
Cadmium	UNKN	0.002	mg/L	C	J		NA			UNKN	0.002	mg/L	C UJ
Calcium	UNKN	38.300	mg/L	C	J		NA			UNKN	71.800	mg/L	C J
Chromium	UNKN	0.002	mg/L	C	UJ		NA			UNKN	0.010	mg/L	C UJ
Copper	UNKN	0.008	mg/L	C	UJ		NA			UNKN	0.010	mg/L	C UJ
Iron	UNKN	0.284	mg/L	C	J		NA			UNKN	0.041	mg/L	C J
Lead	UNKN	0.008	mg/L	C	J		NA			UNKN	0.009	mg/L	C -
Magnesium	UNKN	10.100	mg/L	C	J		NA			UNKN	20.900	mg/L	C J
Manganese	UNKN	0.046	mg/L	C	J		NA			UNKN	0.012	mg/L	C J
Mercury	UNKN	0.001	mg/L	C	J		NA			UNKN	0.000	mg/L	C -
Molybdenum	UNKN	0.003	mg/L	C	UJ		NA			UNKN	0.010	mg/L	C UJ
Nickel	UNKN	0.008	mg/L	C	J		NA			UNKN	0.020	mg/L	C UJ
Potassium	UNKN	2.330	mg/L	C	-		NA			UNKN	1.680	mg/L	C J
Selenium	UNKN	0.002	mg/L	C	UJ		NA			UNKN	0.002	mg/L	C U
Silicon		NA					NA			UNKN	2.250	mg/L	C J
Silver	UNKN	0.001	mg/L	C	UJ		NA			UNKN	0.010	mg/L	C UJ
Sodium	UNKN	1.990	mg/L	C	-		NA			UNKN	9.690	mg/L	C J
Vanadium		NA					NA			UNKN	0.010	mg/L	C UJ
Semivolatile Organics													
Methyl parathion		NA				UNFI	0.250	ug/L	C UJ		NA		
Parathion		NA				UNFI	0.250	ug/L	C UJ		NA		
Pesticide Organics/PCBs													
Azinphosmethyl		NA				UNFI	2.500	ug/L	C UJ		NA		
Demeton		NA				UNFI	0.250	ug/L	C UJ		NA		
Diazinon		NA				UNFI	0.250	ug/L	C UJ		NA		
Disulfoton		NA				UNFI	0.250	ug/L	C UJ		NA		
Ethion		NA				UNFI	0.250	ug/L	C UJ		NA		
Malathion		NA				UNFI	0.250	ug/L	C UJ		NA		
General Chemistry													
Ammonia	UNFI	0.163	mg/L	C	J	UNFI	0.452	mg/L	C -	UNFI	0.100	mg/L	C UJ
Chloride	UNFI	3.500	mg/L	C	J	UNFI	16.500	mg/L	C J	UNFI	19.990	mg/L	C J
Fluoride	UNFI	0.300	mg/L	C	J	UNFI	0.215	mg/L	C -	UNFI	0.180	mg/L	C J
Nitrate	UNFI	0.140	mg/L	C	J	UNFI	4.600	mg/L	C J	UNFI	2.310	mg/L	C J
Phenols	UNFI	0.010	mg/L	C	UJ	UNFI	0.010	mg/L	C U	UNFI	0.010	mg/L	C UJ

TABLE E-11
(Continued)

PHASE I - CHEMICAL PARAMETERS

BORING NUMBER		ASIT-009				W-11				W-11			
SAMPLE NUMBER		001175				001107				001209			
SAMPLING DATE		03/30/89				01/12/89				05/14/89			
CHEMICAL PARAMETERS	FLTD	RESULTS	UNITS	L	VQ	FLTD	RESULTS	UNITS	L	VQ	FLTD	RESULTS	UNITS	L	VQ
General Chemistry															
Phosphorus	UNFI	0.842	mg/L	C	J	UNFI	0.541	mg/L	C	J	UNFI	0.020	mg/L	C	UJ
Sulfate		NA				UNFI	37.000	mg/L	C	J	UNFI	57.360	mg/L	C	J
Sulfate	UNKN	171.000	mg/L	C	J		NA					NA			
Total Kjeldahl Nitrogen	UNFI	1.090	mg/L	C	J	UNFI	1.810	mg/L	C	J	UNFI	0.347	mg/L	C	J
Total Organic Carbon		NA					NA				UNFI	1.000	mg/L	C	UJ
Total Organic Halides	UNFI	0.016	mg/L	C	J		NA				UNFI	0.010	mg/L	C	J
Total Organic Nitrogen	UNFI	0.927	mg/L	C	J	UNFI	1.360	mg/L	C	J	UNFI	0.347	mg/L	C	J

TABLE E-11
(Continued)

PHASE I - CHEMICAL PARAMETERS

BORING NUMBER	W-11
SAMPLE NUMBER	001247
SAMPLING DATE	07/15/90

CHEMICAL PARAMETERS	FLTD	RESULTS	UNITS	L	VQ
Inorganics					
Aluminum	UNKN	0.060	mg/L	C	U
Arsenic	UNKN	0.002	mg/L	C	UJ
Barium	UNKN	0.047	mg/L	C	-
Cadmium	UNKN	0.003	mg/L	C	-
Calcium	UNKN	86.900	mg/L	C	-
Chromium	UNKN	0.026	mg/L	C	-
Copper	UNKN	0.010	mg/L	C	U
Iron	UNKN	0.024	mg/L	C	-
Lead	UNKN	0.006	mg/L	C	-
Magnesium	UNKN	20.600	mg/L	C	-
Manganese	UNKN	0.009	mg/L	C	-
Mercury	UNKN	0.000	mg/L	C	U
Molybdenum	UNKN	0.010	mg/L	C	U
Nickel	UNKN	0.025	mg/L	C	-
Potassium	UNKN	3.030	mg/L	C	-
Selenium	UNKN	0.002	mg/L	C	U
Silicon	UNKN	4.610	mg/L	C	-
Silver	UNKN	0.013	mg/L	C	-
Sodium	UNKN	9.750	mg/L	C	-
Vanadium	UNKN	0.013	mg/L	C	-
General Chemistry					
Ammonia	UNFI	0.100	mg/L	C	U
Chloride	UNFI	9.210	mg/L	C	-
Fluoride	UNFI	0.220	mg/L	C	-
Nitrate	UNFI	12.100	mg/L	C	J
Phenols	UNFI	0.020	mg/L	C	-
Phosphorus	UNFI	0.170	mg/L	C	J
Sulfate	UNFI	44.800	mg/L	C	-
Sulfide	UNFI	0.500	mg/L	C	U
Total Organic Carbon	UNFI	5.590	mg/L	C	-
Total Organic Halides	UNFI	0.010	mg/L	C	U
Total Organic Nitrogen	UNFI	0.580	mg/L	C	-

0199

5174

TABLE E-11
(Continued)

PHASE II - RADIOLOGICAL PARAMETERS

BORING NUMBER		IFP-SW-02				IFP-SW-02				IFP-SW-03			
SAMPLE NUMBER		111828				112022				111819			
SAMPLING DATE		04/26/93				04/30/93				04/21/93			
RADIOLOGICAL PARAMETERS	FLTD	RESULTS	UNITS	VQ	FLTD	RESULTS	UNITS	VQ	FLTD	RESULTS	UNITS	VQ
CS-137	UNFI	19.300	pci/L	UJ	UNFI	15.700	pci/L	UJ	UNFI	17.900	pci/L	UJ
GROSS ALPHA	UNFI	72.900	pci/L	J	UNFI	426.000	pci/L	J	UNFI	5.850	pci/L	UJ
GROSS BETA	UNFI	51.300	pci/L	J	UNFI	172.000	pci/L	J	UNFI	8.560	pci/L	-
NP-237	UNFI	0.052	pci/L	R	UNFI	0.790	pci/L	N	UNFI	0.435	pci/L	N
PU-238	UNFI	0.190	pci/L	UJ	UNFI	2.910	pci/L	-	UNFI	0.077	pci/L	UJ
PU-239/240	UNFI	0.052	pci/L	UJ	UNFI	0.200	pci/L	J	UNFI	0.057	pci/L	UJ
RA-226	UNFI	0.148	pci/L	J	UNFI	0.150	pci/L	UJ	UNFI	0.181	pci/L	UJ
RA-228	UNFI	1.780	pci/L	UJ	UNFI	1.770	pci/L	UJ	UNFI	1.070	pci/L	UJ
RU-106	UNFI	151.000	pci/L	UJ	UNFI	64.600	pci/L	UJ	UNFI	126.000	pci/L	UJ
SR-90	UNFI	0.768	pci/L	UJ	UNFI	0.810	pci/L	UJ	UNFI	0.807	pci/L	UJ
TC-99	UNFI	9.200	pci/L	UJ	UNFI	9.200	pci/L	UJ	UNFI	10.700	pci/L	UJ
TH-228	UNFI	0.435	pci/L	UJ	UNFI	0.150	pci/L	UJ	UNFI	0.237	pci/L	UJ
TH-230	UNFI	0.653	pci/L	J	UNFI	0.340	pci/L	J	UNFI	0.200	pci/L	UJ
TH-232	UNFI	0.364	pci/L	UJ	UNFI	0.058	pci/L	UJ	UNFI	0.112	pci/L	UJ
TH-TOTAL	UNFI	3.350	ug/L	UJ	UNFI	0.530	ug/L	UJ	UNFI	1.380	ug/L	UJ
U-234	UNFI	61.000	pci/L	-	UNFI	265.000	pci/L	-	UNFI	2.320	pci/L	-
U-235/236	UNFI	2.900	pci/L	-	UNFI	14.000	pci/L	-	UNFI	0.123	pci/L	UJ
U-238	UNFI	59.700	pci/L	-	UNFI	257.000	pci/L	-	UNFI	1.740	pci/L	-
U-TOTAL	UNFI	165.000	ug/L	-	UNFI	820.000	ug/L	-	UNFI	5.250	ug/L	-

TABLE E-11
(Continued)

PHASE II - RADIOLOGICAL PARAMETERS

BORING NUMBER		IFP-SW-03				IFP-SW-04				IFP-SW-04			
SAMPLE NUMBER		112027				111820				112015			
SAMPLING DATE		05/01/93				04/21/93				04/29/93			
RADIOLOGICAL PARAMETERS	FLTD	RESULTS	UNITS	VQ	FLTD	RESULTS	UNITS	VQ	FLTD	RESULTS	UNITS	VQ
CS-137	UNFI	14.800	pci/L	UJ	UNFI	15.000	pci/L	UJ	UNFI	11.200	pci/L	UJ
GROSS ALPHA	UNFI	5.830	pci/L	UJ	UNFI	8.940	pci/L	UJ	UNFI	6.400	pci/L	UJ
GROSS BETA	UNFI	4.280	pci/L	UJ	UNFI	3.480	pci/L	UJ	UNFI	4.300	pci/L	UJ
NP-237	UNFI	0.370	pci/L	U	UNFI	0.056	pci/L	R	UNFI	0.404	pci/L	UJ
PU-238	UNFI	0.170	pci/L	J	UNFI	0.120	pci/L	UJ	UNFI	0.157	pci/L	UJ
PU-239/240	UNFI	0.250	pci/L	J	UNFI	0.056	pci/L	UJ	UNFI	0.266	pci/L	J
RA-226	UNFI	0.102	pci/L	UJ	UNFI	0.088	pci/L	UJ	UNFI	0.187	pci/L	UJ
RA-228	UNFI	1.190	pci/L	UJ	UNFI	2.320	pci/L	UJ	UNFI	1.800	pci/L	UJ
RU-106	UNFI	151.000	pci/L	UJ	UNFI	154.000	pci/L	UJ	UNFI	142.000	pci/L	UJ
SR-90	UNFI	0.892	pci/L	UJ	UNFI	0.820	pci/L	UJ	UNFI	0.861	pci/L	UJ
TC-99	UNFI	8.900	pci/L	UJ	UNFI	8.600	pci/L	UJ	UNFI	8.600	pci/L	UJ
TH-228	UNFI	0.027	pci/L	J	UNFI	0.280	pci/L	UJ	UNFI	0.255	pci/L	UJ
TH-230	UNFI	0.320	pci/L	J	UNFI	0.260	pci/L	-	UNFI	0.433	pci/L	J
TH-232	UNFI	0.013	pci/L	UJ	UNFI	0.190	pci/L	UJ	UNFI	0.167	pci/L	UJ
TH-TOTAL	UNFI	0.015	ug/L	UJ	UNFI	1.730	ug/L	UJ	UNFI	1.540	ug/L	UJ
U-234	UNFI	1.760	pci/L	-	UNFI	2.350	pci/L	J	UNFI	1.420	pci/L	-
U-235/236	UNFI	0.150	pci/L	UJ	UNFI	0.160	pci/L	J	UNFI	0.124	pci/L	UJ
U-238	UNFI	2.130	pci/L	-	UNFI	2.260	pci/L	J	UNFI	1.840	pci/L	-
U-TOTAL	UNFI	5.030	ug/L	-	UNFI	5.870	ug/L	-	UNFI	4.570	ug/L	-

5174

TABLE E-11
(Continued)

PHASE II - CHEMICAL PARAMETERS

BORING NUMBER		IFP-SW-03				IFP-SW-04				IFP-SW-02			
SAMPLE NUMBER		111819				111820				111828			
SAMPLING DATE		04/21/93				04/21/93				04/26/93			
CHEMICAL PARAMETERS	FLTD	RESULTS	UNITS	L	VQ	FLTD	RESULTS	UNITS	L	VQ	FLTD	RESULTS	UNITS	L	VQ
Inorganics															
Aluminum	FILT	0.185	mg/L	C	U		NA				FILT	0.131	mg/L	C	-
Aluminum		NA				UNFI	0.164	mg/L	C	U		NA			
Antimony	FILT	0.005	mg/L	C	U		NA				FILT	0.005	mg/L	C	UJ
Antimony		NA				UNFI	0.005	mg/L	C	U		NA			
Arsenic	FILT	0.002	mg/L	C	U		NA				FILT	0.002	mg/L	C	U
Arsenic		NA				UNFI	0.002	mg/L	C	UJ		NA			
Barium	FILT	0.038	mg/L	C	-		NA				FILT	0.041	mg/L	C	-
Barium		NA				UNFI	0.037	mg/L	C	-		NA			
Beryllium	FILT	0.002	mg/L	C	U		NA				FILT	0.002	mg/L	C	U
Beryllium		NA				UNFI	0.002	mg/L	C	U		NA			
Cadmium	FILT	0.005	mg/L	C	U		NA				FILT	0.005	mg/L	C	U
Cadmium		NA				UNFI	0.005	mg/L	C	U		NA			
Calcium	FILT	90.000	mg/L	C	J		NA				FILT	82.600	mg/L	C	J
Calcium		NA				UNFI	89.900	mg/L	C	J		NA			
Chromium	FILT	0.010	mg/L	C	U		NA				FILT	0.010	mg/L	C	U
Chromium		NA				UNFI	0.010	mg/L	C	U		NA			
Cobalt	FILT	0.010	mg/L	C	U		NA				FILT	0.010	mg/L	C	U
Cobalt		NA				UNFI	0.010	mg/L	C	U		NA			
Copper	FILT	0.010	mg/L	C	U		NA				FILT	0.010	mg/L	C	U
Copper		NA				UNFI	0.010	mg/L	C	U		NA			
Cyanide	UNFI	0.002	mg/L	C	UJ	UNFI	0.004	mg/L	C	-	UNFI	0.002	mg/L	C	U
Iron	FILT	0.020	mg/L	C	U		NA				FILT	0.073	mg/L	C	-
Iron		NA				UNFI	0.020	mg/L	C	U		NA			
Lead	FILT	0.002	mg/L	C	U		NA				FILT	0.002	mg/L	C	U
Lead		NA				UNFI	0.002	mg/L	C	UJ		NA			
Magnesium	FILT	23.400	mg/L	C	J		NA				FILT	24.800	mg/L	C	J
Magnesium		NA				UNFI	23.800	mg/L	C	J		NA			
Manganese	FILT	0.029	mg/L	C	-		NA				FILT	0.023	mg/L	C	-
Manganese		NA				UNFI	0.027	mg/L	C	-		NA			
Mercury	FILT	0.000	mg/L	C	U		NA				FILT	0.000	mg/L	C	U
Mercury		NA				UNFI	0.000	mg/L	C	U		NA			
Molybdenum	FILT	0.020	mg/L	C	U		NA				FILT	0.020	mg/L	C	U
Molybdenum		NA				UNFI	0.020	mg/L	C	U		NA			
Nickel	FILT	0.020	mg/L	C	U		NA				FILT	0.020	mg/L	C	U
Nickel		NA				UNFI	0.020	mg/L	C	U		NA			
Potassium	FILT	1.930	mg/L	C	-		NA				FILT	1.830	mg/L	C	-
Potassium		NA				UNFI	1.930	mg/L	C	-		NA			
Selenium	FILT	0.002	mg/L	C	UJ		NA				FILT	0.002	mg/L	C	U
Selenium		NA				UNFI	0.002	mg/L	C	UJ		NA			
Silicon	FILT	1.310	mg/L	C	-		NA				FILT	5.760	mg/L	C	-
Silicon		NA				UNFI	1.300	mg/L	C	-		NA			
Silver	FILT	0.010	mg/L	C	U		NA				FILT	0.010	mg/L	C	U

TABLE E-11
(Continued)

PHASE II - CHEMICAL PARAMETERS

BORING NUMBER		IFP-SW-03					IFP-SW-04					IFP-SW-02				
SAMPLE NUMBER		111819					111820					111828				
SAMPLING DATE		04/21/93					04/21/93					04/26/93				
CHEMICAL PARAMETERS	FLTD	RESULTS	UNITS	L	VQ		FLTD	RESULTS	UNITS	L	VQ	FLTD	RESULTS	UNITS	L	VQ
Inorganics																
Silver		NA					UNFI	0.010	mg/L	C	U		NA			
Sodium	FILT	12.500	mg/L	C	J		NA					FILT	2.720	mg/L	C	J
Sodium		NA					UNFI	12.800	mg/L	C	J		NA			
Thallium	FILT	0.002	mg/L	C	UJ		NA					FILT	0.002	mg/L	C	UJ
Thallium		NA					UNFI	0.002	mg/L	C	UJ		NA			
Vanadium	FILT	0.010	mg/L	C	U		NA					FILT	0.010	mg/L	C	U
Vanadium		NA					UNFI	0.010	mg/L	C	U		NA			
Zinc	FILT	0.005	mg/L	C	U		NA					FILT	0.005	mg/L	C	U
Zinc		NA					UNFI	0.015	mg/L	C	-		NA			
Volatile Organics																
1,1,1-Trichloroethane	UNFI	10.000	ug/L	C	U		UNFI	10.000	ug/L	C	U	UNFI	10.000	ug/L	C	U
1,1,2,2-Tetrachloroethane	UNFI	10.000	ug/L	C	U		UNFI	10.000	ug/L	C	U	UNFI	10.000	ug/L	C	U
1,1,2-Trichloroethane	UNFI	10.000	ug/L	C	U		UNFI	10.000	ug/L	C	U	UNFI	10.000	ug/L	C	U
1,1-Dichloroethane	UNFI	10.000	ug/L	C	U		UNFI	10.000	ug/L	C	U	UNFI	10.000	ug/L	C	U
1,1-Dichloroethene	UNFI	10.000	ug/L	C	U		UNFI	10.000	ug/L	C	U	UNFI	10.000	ug/L	C	U
1,2-Dichloroethane	UNFI	10.000	ug/L	C	U		UNFI	10.000	ug/L	C	U	UNFI	10.000	ug/L	C	U
1,2-Dichloroethene	UNFI	10.000	ug/L	C	U		UNFI	10.000	ug/L	C	U	UNFI	10.000	ug/L	C	U
1,2-Dichloropropane	UNFI	10.000	ug/L	C	U		UNFI	10.000	ug/L	C	U	UNFI	10.000	ug/L	C	U
2-Butanone	UNFI	10.000	ug/L	C	U		UNFI	10.000	ug/L	C	U	UNFI	10.000	ug/L	C	U
2-Hexanone	UNFI	10.000	ug/L	C	UJ		UNFI	10.000	ug/L	C	UJ	UNFI	10.000	ug/L	C	UJ
4-Methyl-2-pentanone	UNFI	10.000	ug/L	C	UJ		UNFI	10.000	ug/L	C	UJ	UNFI	10.000	ug/L	C	U
Acetone	UNFI	26.000	ug/L	C	U		UNFI	10.000	ug/L	C	U	UNFI	10.000	ug/L	C	U
Benzene	UNFI	10.000	ug/L	C	U		UNFI	10.000	ug/L	C	U	UNFI	10.000	ug/L	C	U
Bromodichloromethane	UNFI	10.000	ug/L	C	U		UNFI	10.000	ug/L	C	U	UNFI	10.000	ug/L	C	U
Bromoform	UNFI	10.000	ug/L	C	U		UNFI	10.000	ug/L	C	U	UNFI	10.000	ug/L	C	U
Bromomethane	UNFI	10.000	ug/L	C	U		UNFI	10.000	ug/L	C	U	UNFI	10.000	ug/L	C	U
Carbon Tetrachloride	UNFI	10.000	ug/L	C	U		UNFI	10.000	ug/L	C	U	UNFI	10.000	ug/L	C	U
Carbon disulfide	UNFI	10.000	ug/L	C	U		UNFI	10.000	ug/L	C	U	UNFI	10.000	ug/L	C	U
Chlorobenzene	UNFI	10.000	ug/L	C	U		UNFI	10.000	ug/L	C	U	UNFI	10.000	ug/L	C	U
Chloroethane	UNFI	10.000	ug/L	C	U		UNFI	10.000	ug/L	C	U	UNFI	10.000	ug/L	C	U
Chloroform	UNFI	10.000	ug/L	C	U		UNFI	10.000	ug/L	C	U	UNFI	10.000	ug/L	C	U
Chloromethane	UNFI	10.000	ug/L	C	U		UNFI	10.000	ug/L	C	U	UNFI	10.000	ug/L	C	UJ
Dibromochloromethane	UNFI	10.000	ug/L	C	U		UNFI	10.000	ug/L	C	U	UNFI	10.000	ug/L	C	U
Ethylbenzene	UNFI	10.000	ug/L	C	U		UNFI	10.000	ug/L	C	U	UNFI	10.000	ug/L	C	U
Methylene chloride	UNFI	10.000	ug/L	C	UJ		UNFI	10.000	ug/L	C	UJ	UNFI	10.000	ug/L	C	UJ
Styrene	UNFI	10.000	ug/L	C	U		UNFI	10.000	ug/L	C	U	UNFI	10.000	ug/L	C	U
Tetrachloroethene	UNFI	10.000	ug/L	C	U		UNFI	10.000	ug/L	C	U	UNFI	10.000	ug/L	C	U
Toluene	UNFI	10.000	ug/L	C	U		UNFI	10.000	ug/L	C	U	UNFI	2.000	ug/L	C	J
Trichloroethene	UNFI	10.000	ug/L	C	U		UNFI	10.000	ug/L	C	U	UNFI	10.000	ug/L	C	U
Vinyl Acetate	UNFI	10.000	ug/L	C	U		UNFI	10.000	ug/L	C	U	UNFI	10.000	ug/L	C	U

TABLE E-11
(Continued)

PHASE II - CHEMICAL PARAMETERS

BORING NUMBER		IFP-SW-03				IFP-SW-04				IFP-SW-02			
SAMPLE NUMBER		111819				111820				111828			
SAMPLING DATE		04/21/93				04/21/93				04/26/93			
CHEMICAL PARAMETERS	FLTD	RESULTS	UNITS	L	VQ	FLTD	RESULTS	UNITS	L VQ	FLTD	RESULTS	UNITS	L VQ
Volatile Organics													
Vinyl chloride	UNFI	10.000	ug/L	C	U	UNFI	10.000	ug/L	C U	UNFI	10.000	ug/L	C UJ
Xylenes, Total	UNFI	10.000	ug/L	C	U	UNFI	10.000	ug/L	C U	UNFI	10.000	ug/L	C U
cis-1,3-Dichloropropene	UNFI	10.000	ug/L	C	U	UNFI	10.000	ug/L	C U	UNFI	10.000	ug/L	C U
trans-1,3-Dichloropropene	UNFI	10.000	ug/L	C	U	UNFI	10.000	ug/L	C U	UNFI	10.000	ug/L	C U
Semivolatile Organics													
1,2,4-Trichlorobenzene	UNFI	10.000	ug/L	C	UJ	UNFI	10.000	ug/L	C U	UNFI	10.000	ug/L	C U
1,2-Dichlorobenzene	UNFI	10.000	ug/L	C	UJ	UNFI	10.000	ug/L	C U	UNFI	10.000	ug/L	C U
1,3-Dichlorobenzene	UNFI	10.000	ug/L	C	UJ	UNFI	10.000	ug/L	C U	UNFI	10.000	ug/L	C U
1,4-Dichlorobenzene	UNFI	10.000	ug/L	C	UJ	UNFI	10.000	ug/L	C U	UNFI	10.000	ug/L	C U
2,4,5-Trichlorophenol	UNFI	25.000	ug/L	C	UJ	UNFI	25.000	ug/L	C U	UNFI	25.000	ug/L	C U
2,4,6-Trichlorophenol	UNFI	10.000	ug/L	C	UJ	UNFI	10.000	ug/L	C U	UNFI	10.000	ug/L	C U
2,4-Dichlorophenol	UNFI	10.000	ug/L	C	UJ	UNFI	10.000	ug/L	C U	UNFI	10.000	ug/L	C U
2,4-Dimethylphenol	UNFI	10.000	ug/L	C	UJ	UNFI	10.000	ug/L	C U	UNFI	10.000	ug/L	C U
2,4-Dinitrophenol	UNFI	25.000	ug/L	C	R	UNFI	25.000	ug/L	C R	UNFI	50.000	ug/L	C R
2,4-Dinitrotoluene	UNFI	10.000	ug/L	C	UJ	UNFI	10.000	ug/L	C UJ	UNFI	10.000	ug/L	C UJ
2,6-Dinitrotoluene	UNFI	10.000	ug/L	C	UJ	UNFI	10.000	ug/L	C U	UNFI	10.000	ug/L	C U
2-Benzyl-4-chlorophenol	UNFI	10.000	ug/L	C	UJ	UNFI	10.000	ug/L	C U	UNFI	10.000	ug/L	C U
2-Chloronaphthalene	UNFI	10.000	ug/L	C	UJ	UNFI	10.000	ug/L	C U	UNFI	10.000	ug/L	C U
2-Chlorophenol	UNFI	10.000	ug/L	C	UJ	UNFI	10.000	ug/L	C U	UNFI	10.000	ug/L	C U
2-Methylnaphthalene	UNFI	10.000	ug/L	C	UJ	UNFI	10.000	ug/L	C U	UNFI	10.000	ug/L	C U
2-Methylphenol	UNFI	10.000	ug/L	C	UJ	UNFI	10.000	ug/L	C U	UNFI	10.000	ug/L	C U
2-Nitroaniline	UNFI	25.000	ug/L	C	UJ	UNFI	25.000	ug/L	C U	UNFI	25.000	ug/L	C U
2-Nitrophenol	UNFI	10.000	ug/L	C	UJ	UNFI	10.000	ug/L	C U	UNFI	10.000	ug/L	C U
3,3'-Dichlorobenzidine	UNFI	10.000	ug/L	C	UJ	UNFI	10.000	ug/L	C U	UNFI	10.000	ug/L	C U
3-Nitroaniline	UNFI	25.000	ug/L	C	UJ	UNFI	25.000	ug/L	C U	UNFI	25.000	ug/L	C U
4,6-Dinitro-2-methylphenol	UNFI	25.000	ug/L	C	R	UNFI	25.000	ug/L	C R	UNFI	25.000	ug/L	C R
4-Bromophenyl phenyl ether	UNFI	10.000	ug/L	C	UJ	UNFI	10.000	ug/L	C U	UNFI	10.000	ug/L	C U
4-Chloro-3-methylphenol	UNFI	10.000	ug/L	C	UJ	UNFI	10.000	ug/L	C U	UNFI	10.000	ug/L	C U
4-Chlorophenylphenyl ether	UNFI	10.000	ug/L	C	UJ	UNFI	10.000	ug/L	C U	UNFI	10.000	ug/L	C U
4-Methylphenol	UNFI	10.000	ug/L	C	UJ	UNFI	10.000	ug/L	C U	UNFI	10.000	ug/L	C U
4-Nitroaniline	UNFI	25.000	ug/L	C	UJ	UNFI	25.000	ug/L	C U	UNFI	25.000	ug/L	C U
4-Nitrophenol	UNFI	25.000	ug/L	C	UJ	UNFI	25.000	ug/L	C UJ	UNFI	25.000	ug/L	C UJ
Acenaphthene	UNFI	10.000	ug/L	C	UJ	UNFI	10.000	ug/L	C U	UNFI	10.000	ug/L	C U
Acenaphthylene	UNFI	10.000	ug/L	C	UJ	UNFI	10.000	ug/L	C U	UNFI	10.000	ug/L	C U
Anthracene	UNFI	10.000	ug/L	C	UJ	UNFI	10.000	ug/L	C U	UNFI	10.000	ug/L	C U
Benzo(a)anthracene	UNFI	10.000	ug/L	C	UJ	UNFI	10.000	ug/L	C U	UNFI	10.000	ug/L	C U
Benzo(a)pyrene	UNFI	10.000	ug/L	C	UJ	UNFI	10.000	ug/L	C U	UNFI	10.000	ug/L	C U
Benzo(b)fluoranthene	UNFI	10.000	ug/L	C	UJ	UNFI	10.000	ug/L	C U	UNFI	10.000	ug/L	C U
Benzo(g,h,i)perylene	UNFI	10.000	ug/L	C	UJ	UNFI	10.000	ug/L	C U	UNFI	10.000	ug/L	C U
Benzo(k)fluoranthene	UNFI	10.000	ug/L	C	UJ	UNFI	10.000	ug/L	C U	UNFI	10.000	ug/L	C U

TABLE E-11
(Continued)

PHASE II - CHEMICAL PARAMETERS

BORING NUMBER		IFP-SW-03				IFP-SW-04				IFP-SW-02			
SAMPLE NUMBER		111819				111820				111828			
SAMPLING DATE		04/21/93				04/21/93				04/26/93			
CHEMICAL PARAMETERS	FLTD	RESULTS	UNITS	L	VQ	FLTD	RESULTS	UNITS	L	VQ	FLTD	RESULTS	UNITS	L	VQ
Semivolatile Organics															
Benzoic acid	UNFI	50.000	ug/L	C	R	UNFI	50.000	ug/L	C	R	UNFI	50.000	ug/L	C	R
Benzyl alcohol	UNFI	10.000	ug/L	C	UJ	UNFI	10.000	ug/L	C	UJ	UNFI	10.000	ug/L	C	UJ
Butyl benzyl phthalate	UNFI	10.000	ug/L	C	UJ	UNFI	10.000	ug/L	C	U	UNFI	10.000	ug/L	C	U
Carbazole	UNFI	10.000	ug/L	C	UJ	UNFI	10.000	ug/L	C	U	UNFI	10.000	ug/L	C	U
Chrysene	UNFI	10.000	ug/L	C	UJ	UNFI	10.000	ug/L	C	U	UNFI	10.000	ug/L	C	U
Di-n-butyl phthalate	UNFI	10.000	ug/L	C	UJ	UNFI	10.000	ug/L	C	U	UNFI	10.000	ug/L	C	U
Di-n-octyl phthalate	UNFI	10.000	ug/L	C	UJ	UNFI	10.000	ug/L	C	U	UNFI	10.000	ug/L	C	UJ
Dibenzo(a,h)anthracene	UNFI	10.000	ug/L	C	UJ	UNFI	10.000	ug/L	C	U	UNFI	10.000	ug/L	C	U
Dibenzofuran	UNFI	10.000	ug/L	C	UJ	UNFI	10.000	ug/L	C	U	UNFI	10.000	ug/L	C	U
Diethyl phthalate	UNFI	10.000	ug/L	C	UJ	UNFI	10.000	ug/L	C	U	UNFI	10.000	ug/L	C	U
Dimethyl phthalate	UNFI	10.000	ug/L	C	UJ	UNFI	10.000	ug/L	C	U	UNFI	10.000	ug/L	C	U
Fluoranthene	UNFI	10.000	ug/L	C	UJ	UNFI	10.000	ug/L	C	U	UNFI	10.000	ug/L	C	U
Fluorene	UNFI	10.000	ug/L	C	UJ	UNFI	10.000	ug/L	C	U	UNFI	10.000	ug/L	C	U
Hexachlorobenzene	UNFI	10.000	ug/L	C	UJ	UNFI	10.000	ug/L	C	U	UNFI	10.000	ug/L	C	U
Hexachlorobutadiene	UNFI	10.000	ug/L	C	UJ	UNFI	10.000	ug/L	C	U	UNFI	10.000	ug/L	C	U
Hexachlorocyclopentadiene	UNFI	10.000	ug/L	C	UJ	UNFI	10.000	ug/L	C	UJ	UNFI	10.000	ug/L	C	UJ
Hexachloroethane	UNFI	10.000	ug/L	C	UJ	UNFI	10.000	ug/L	C	U	UNFI	10.000	ug/L	C	U
Indeno(1,2,3-cd)pyrene	UNFI	10.000	ug/L	C	UJ	UNFI	10.000	ug/L	C	U	UNFI	10.000	ug/L	C	U
Isophorone	UNFI	10.000	ug/L	C	UJ	UNFI	10.000	ug/L	C	U	UNFI	10.000	ug/L	C	U
N-Nitroso-di-n-propylamine	UNFI	10.000	ug/L	C	UJ	UNFI	10.000	ug/L	C	U	UNFI	10.000	ug/L	C	U
N-Nitrosodimethylamine	UNFI	10.000	ug/L	C	UJ	UNFI	10.000	ug/L	C	U	UNFI	10.000	ug/L	C	U
N-Nitrosodiphenylamine	UNFI	10.000	ug/L	C	UJ	UNFI	10.000	ug/L	C	U	UNFI	10.000	ug/L	C	U
Naphthalene	UNFI	10.000	ug/L	C	UJ	UNFI	10.000	ug/L	C	U	UNFI	10.000	ug/L	C	U
Nitrobenzene	UNFI	10.000	ug/L	C	UJ	UNFI	10.000	ug/L	C	U	UNFI	10.000	ug/L	C	U
Pentachlorophenol	UNFI	25.000	ug/L	C	UJ	UNFI	25.000	ug/L	C	U	UNFI	25.000	ug/L	C	U
Phenanthrene	UNFI	10.000	ug/L	C	UJ	UNFI	10.000	ug/L	C	U	UNFI	10.000	ug/L	C	U
Phenol	UNFI	10.000	ug/L	C	UJ	UNFI	10.000	ug/L	C	U	UNFI	10.000	ug/L	C	U
Pyrene	UNFI	10.000	ug/L	C	UJ	UNFI	10.000	ug/L	C	U	UNFI	10.000	ug/L	C	U
Tributyl phosphate	UNFI	10.000	ug/L	C	UJ	UNFI	10.000	ug/L	C	U	UNFI	10.000	ug/L	C	U
bis(2-Chloroethoxy)methane	UNFI	10.000	ug/L	C	UJ	UNFI	10.000	ug/L	C	U	UNFI	10.000	ug/L	C	U
bis(2-Chloroethyl)ether	UNFI	10.000	ug/L	C	UJ	UNFI	10.000	ug/L	C	U	UNFI	10.000	ug/L	C	U
bis(2-Chloroisopropyl) ether	UNFI	10.000	ug/L	C	UJ	UNFI	10.000	ug/L	C	U	UNFI	10.000	ug/L	C	U
bis(2-Ethylhexyl) phthalate	UNFI	10.000	ug/L	C	UJ	UNFI	10.000	ug/L	C	U	UNFI	1.000	ug/L	C	J
p-Chloroaniline	UNFI	10.000	ug/L	C	UJ	UNFI	10.000	ug/L	C	U	UNFI	10.000	ug/L	C	U
Pesticide Organics/PCBs															
4,4'-DDD	UNFI	0.100	ug/L	C	U	UNFI	0.100	ug/L	C	U	UNFI	0.100	ug/L	C	U
4,4'-DDE	UNFI	0.100	ug/L	C	U	UNFI	0.100	ug/L	C	U	UNFI	0.100	ug/L	C	U
4,4'-DDT	UNFI	0.100	ug/L	C	UJ	UNFI	0.100	ug/L	C	UJ	UNFI	0.100	ug/L	C	U
Aldrin	UNFI	0.050	ug/L	C	U	UNFI	0.050	ug/L	C	U	UNFI	0.050	ug/L	C	U
Aroclor-1016	UNFI	1.000	ug/L	C	U	UNFI	1.000	ug/L	C	U	UNFI	1.000	ug/L	C	UJ

51174

TABLE E-11
(Continued)

PHASE II - CHEMICAL PARAMETERS

BORING NUMBER		IFP-SW-03				IFP-SW-04				IFP-SW-02			
SAMPLE NUMBER		111819				111820				111828			
SAMPLING DATE		04/21/93				04/21/93				04/26/93			
CHEMICAL PARAMETERS	FLTD	RESULTS	UNITS	L	VQ	FLTD	RESULTS	UNITS	L	VQ	FLTD	RESULTS	UNITS	L	VQ
Pesticide Organics/PCBs															
Aroclor-1221	UNFI	2.000	ug/L	C	U	UNFI	2.000	ug/L	C	U	UNFI	2.000	ug/L	C	UJ
Aroclor-1232	UNFI	1.000	ug/L	C	U	UNFI	1.000	ug/L	C	U	UNFI	1.000	ug/L	C	UJ
Aroclor-1242	UNFI	1.000	ug/L	C	U	UNFI	1.000	ug/L	C	U	UNFI	1.000	ug/L	C	UJ
Aroclor-1248	UNFI	1.000	ug/L	C	U	UNFI	1.000	ug/L	C	U	UNFI	1.000	ug/L	C	UJ
Aroclor-1254	UNFI	1.000	ug/L	C	U	UNFI	1.000	ug/L	C	U	UNFI	1.000	ug/L	C	UJ
Aroclor-1260	UNFI	1.000	ug/L	C	U	UNFI	1.000	ug/L	C	U	UNFI	1.000	ug/L	C	UJ
Dieldrin	UNFI	0.100	ug/L	C	U	UNFI	0.100	ug/L	C	U	UNFI	0.100	ug/L	C	U
Endosulfan II	UNFI	0.100	ug/L	C	U	UNFI	0.100	ug/L	C	U	UNFI	0.100	ug/L	C	U
Endosulfan sulfate	UNFI	0.100	ug/L	C	U	UNFI	0.100	ug/L	C	U	UNFI	0.100	ug/L	C	U
Endosulfan-I	UNFI	0.050	ug/L	C	U	UNFI	0.050	ug/L	C	U	UNFI	0.050	ug/L	C	U
Endrin	UNFI	0.100	ug/L	C	U	UNFI	0.100	ug/L	C	U	UNFI	0.100	ug/L	C	U
Endrin aldehyde	UNFI	0.100	ug/L	C	U	UNFI	0.100	ug/L	C	U	UNFI	0.100	ug/L	C	U
Endrin ketone	UNFI	0.100	ug/L	C	U	UNFI	0.100	ug/L	C	U	UNFI	0.100	ug/L	C	U
Heptachlor	UNFI	0.050	ug/L	C	U	UNFI	0.050	ug/L	C	U	UNFI	0.050	ug/L	C	U
Heptachlor epoxide	UNFI	0.050	ug/L	C	U	UNFI	0.050	ug/L	C	U	UNFI	0.050	ug/L	C	U
Methoxychlor	UNFI	0.500	ug/L	C	U	UNFI	0.500	ug/L	C	U	UNFI	0.500	ug/L	C	U
Toxaphene	UNFI	5.000	ug/L	C	U	UNFI	5.000	ug/L	C	U	UNFI	5.000	ug/L	C	UJ
alpha-BHC	UNFI	0.050	ug/L	C	UJ	UNFI	0.050	ug/L	C	UJ	UNFI	0.050	ug/L	C	UJ
alpha-Chlordane	UNFI	0.050	ug/L	C	U	UNFI	0.050	ug/L	C	U	UNFI	0.050	ug/L	C	U
beta-BHC	UNFI	0.050	ug/L	C	U	UNFI	0.050	ug/L	C	U	UNFI	0.050	ug/L	C	UJ
delta-BHC	UNFI	0.050	ug/L	C	UJ	UNFI	0.050	ug/L	C	UJ	UNFI	0.050	ug/L	C	UJ
gamma-BHC (Lindane)	UNFI	0.050	ug/L	C	UJ	UNFI	0.050	ug/L	C	UJ	UNFI	0.050	ug/L	C	UJ
gamma-Chlordane	UNFI	0.050	ug/L	C	U	UNFI	0.050	ug/L	C	U	UNFI	0.050	ug/L	C	U
General Chemistry															
Alkalinity	UNFI	255.000	mg/L	B	-	UNFI	227.000	mg/L	B	J	UNFI	208.000	mg/L	B	-
Ammonia	UNFI	0.100	mg/L	B	U	UNFI	0.100	mg/L	B	U	UNFI	0.130	mg/L	B	-
Chloride	UNFI	25.720	mg/L	B	-	UNFI	25.400	mg/L	B	-	UNFI	2.330	mg/L	C	-
Fluoride	UNFI	0.200	mg/L	B	-	UNFI	0.190	mg/L	B	-	UNFI	0.230	mg/L	B	-
Nitrate	UNFI	1.750	mg/L	B	R	UNFI	1.640	mg/L	B	J	UNFI	0.140	mg/L	B	J
Phenols	UNFI	0.010	mg/L	B	U	UNFI	0.010	mg/L	B	U	UNFI	0.010	mg/L	B	U
Phosphorus		NA				UNFI	0.060	mg/L	B	-		NA			
Sulfate	UNFI	62.900	mg/L	B	-	UNFI	73.200	mg/L	B	-	UNFI	67.000	mg/L	B	-
Sulfide	UNFI	0.570	mg/L	B	-	UNFI	0.500	mg/L	B	U	UNFI	0.050	mg/L	B	U
Total Kjeldahl Nitrogen	UNFI	0.210	mg/L	B	-	UNFI	0.280	mg/L	B	-	UNFI	0.900	mg/L	B	-
Total Organic Carbon	UNFI	2.500	mg/L	B	-	UNFI	3.000	mg/L	B	-	UNFI	5.770	mg/L	B	-
Total Organic Halides	UNFI	10.000	mg/L	B	U	UNFI	0.010	mg/L	B	U	UNFI	0.011	mg/L	B	-
Total Organic Nitrogen	UNFI	0.210	mg/L	B	-	UNFI	0.280	mg/L	B	-	UNFI	0.770	mg/L	B	-
Total Phosphorous	UNFI	0.030	mg/L	B	-		NA				UNFI	0.190	mg/L	B	-

TABLE E-11
(Continued)

PHASE II - CHEMICAL PARAMETERS

BORING NUMBER		IFP-SW-04				IFP-SW-02				IFP-SW-03			
SAMPLE NUMBER		112015				112022				112027			
SAMPLING DATE		04/29/93				04/30/93				05/01/93			
CHEMICAL PARAMETERS	FLTD	RESULTS	UNITS	L	VQ	FLTD	RESULTS	UNITS	L	VQ	FLTD	RESULTS	UNITS	L	VQ
Inorganics															
Aluminum	FILT	0.048	mg/L	C	-	FILT	0.083	mg/L	D	-	FILT	0.051	mg/L	C	-
Antimony	FILT	0.001	mg/L	C	UJ	FILT	0.002	mg/L	D	UJ	FILT	0.002	mg/L	C	UJ
Arsenic	FILT	0.001	mg/L	C	U	FILT	0.001	mg/L	D	-	FILT	0.001	mg/L	C	U
Barium	FILT	0.042	mg/L	C	J	FILT	0.066	mg/L	D	J	FILT	0.042	mg/L	C	J
Beryllium	FILT	0.002	mg/L	C	U	FILT	0.002	mg/L	D	U	FILT	0.002	mg/L	C	U
Cadmium	FILT	0.002	mg/L	C	U	FILT	0.002	mg/L	D	U	FILT	0.002	mg/L	C	U
Calcium	FILT	85.500	mg/L	C	-	FILT	132.000	mg/L	D	-	FILT	88.000	mg/L	C	-
Chromium	FILT	0.004	mg/L	C	U	FILT	0.004	mg/L	D	U	FILT	0.004	mg/L	C	U
Cobalt	FILT	0.003	mg/L	C	U	FILT	0.003	mg/L	D	U	FILT	0.003	mg/L	C	U
Copper	FILT	0.002	mg/L	C	U	FILT	0.002	mg/L	D	U	FILT	0.002	mg/L	C	U
Cyanide	UNFI	0.001	mg/L	C	-	UNFI	0.001	mg/L	D	R	UNFI	0.001	mg/L	C	R
Iron	FILT	0.012	mg/L	C	U	FILT	0.004	mg/L	D	U	FILT	0.024	mg/L	C	U
Lead	FILT	0.001	mg/L	C	U	FILT	0.001	mg/L	D	U	FILT	0.001	mg/L	C	U
Magnesium	FILT	22.700	mg/L	C	-	FILT	45.700	mg/L	D	-	FILT	23.200	mg/L	C	-
Manganese	FILT	0.017	mg/L	C	-	FILT	0.013	mg/L	D	-	FILT	0.017	mg/L	C	-
Mercury	FILT	0.000	mg/L	C	U	FILT	0.000	mg/L	D	U	FILT	0.000	mg/L	C	U
Molybdenum	FILT	0.003	mg/L	C	U	FILT	0.003	mg/L	D	U	FILT	0.003	mg/L	C	U
Nickel	FILT	0.003	mg/L	C	U	FILT	0.003	mg/L	D	U	FILT	0.003	mg/L	C	U
Potassium	FILT	1.800	mg/L	C	-	FILT	1.740	mg/L	D	-	FILT	1.780	mg/L	C	-
Selenium	FILT	0.001	mg/L	C	U	FILT	0.004	mg/L	D	-	FILT	0.001	mg/L	C	U
Silicon	FILT	1.660	mg/L	C	-	FILT	7.040	mg/L	D	-	FILT	1.080	mg/L	C	-
Silver	FILT	0.002	mg/L	C	U	FILT	0.002	mg/L	D	U	FILT	0.002	mg/L	C	U
Sodium	FILT	11.800	mg/L	C	-	FILT	6.010	mg/L	D	-	FILT	12.200	mg/L	C	-
Thallium	FILT	0.001	mg/L	C	U	FILT	0.001	mg/L	D	U	FILT	0.001	mg/L	C	U
Vanadium	FILT	0.007	mg/L	C	U	FILT	0.010	mg/L	D	U	FILT	0.007	mg/L	C	U
Zinc	FILT	0.005	mg/L	C	U	FILT	0.004	mg/L	D	U	FILT	0.005	mg/L	C	U
Volatile Organics															
1,1,1-Trichloroethane	UNFI	10.000	ug/L	C	U	UNFI	10.000	ug/L	D	U	UNFI	10.000	ug/L	C	U
1,1,2,2-Tetrachloroethane	UNFI	10.000	ug/L	C	U	UNFI	10.000	ug/L	D	U	UNFI	10.000	ug/L	C	U
1,1,2-Trichloroethane	UNFI	10.000	ug/L	C	U	UNFI	10.000	ug/L	D	U	UNFI	10.000	ug/L	C	U
1,1-Dichloroethane	UNFI	10.000	ug/L	C	U	UNFI	10.000	ug/L	D	U	UNFI	10.000	ug/L	C	U
1,1-Dichloroethene	UNFI	10.000	ug/L	C	U	UNFI	10.000	ug/L	D	U	UNFI	10.000	ug/L	C	U
1,2-Dichloroethane	UNFI	10.000	ug/L	C	U	UNFI	10.000	ug/L	D	U	UNFI	10.000	ug/L	C	U
1,2-Dichloroethene	UNFI	10.000	ug/L	C	U	UNFI	10.000	ug/L	D	U	UNFI	10.000	ug/L	C	U
1,2-Dichloropropane	UNFI	10.000	ug/L	C	U	UNFI	10.000	ug/L	D	U	UNFI	10.000	ug/L	C	U
2-Butanone	UNFI	10.000	ug/L	C	U	UNFI	10.000	ug/L	D	U	UNFI	10.000	ug/L	C	U
2-Hexanone	UNFI	10.000	ug/L	C	UJ	UNFI	10.000	ug/L	D	UJ	UNFI	10.000	ug/L	C	UJ
4-Methyl-2-pentanone	UNFI	10.000	ug/L	C	U	UNFI	10.000	ug/L	D	U	UNFI	10.000	ug/L	C	U
Acetone	UNFI	10.000	ug/L	C	U	UNFI	10.000	ug/L	D	U	UNFI	10.000	ug/L	C	U
Benzene	UNFI	10.000	ug/L	C	U	UNFI	10.000	ug/L	D	U	UNFI	10.000	ug/L	C	U

TABLE E-11
(Continued)

PHASE II - CHEMICAL PARAMETERS

BORING NUMBER		IFP-SW-04				IFP-SW-02				IFP-SW-03			
SAMPLE NUMBER		112015				112022				112027			
SAMPLING DATE		04/29/93				04/30/93				05/01/93			
CHEMICAL PARAMETERS	FLTD	RESULTS	UNITS	L	VQ	FLTD	RESULTS	UNITS	L	VQ	FLTD	RESULTS	UNITS	L	VQ
Volatile Organics															
Bromodichloromethane	UNFI	10.000	ug/L	C	U	UNFI	10.000	ug/L	D	U	UNFI	10.000	ug/L	C	U
Bromoform	UNFI	10.000	ug/L	C	U	UNFI	10.000	ug/L	D	U	UNFI	10.000	ug/L	C	U
Bromomethane	UNFI	10.000	ug/L	C	U	UNFI	10.000	ug/L	D	U	UNFI	10.000	ug/L	C	U
Carbon Tetrachloride	UNFI	10.000	ug/L	C	U	UNFI	10.000	ug/L	D	U	UNFI	10.000	ug/L	C	U
Carbon disulfide	UNFI	10.000	ug/L	C	U	UNFI	10.000	ug/L	D	UJ	UNFI	10.000	ug/L	C	UJ
Chlorobenzene	UNFI	10.000	ug/L	C	U	UNFI	10.000	ug/L	D	U	UNFI	10.000	ug/L	C	U
Chloroethane	UNFI	10.000	ug/L	C	U	UNFI	10.000	ug/L	D	UJ	UNFI	10.000	ug/L	C	UJ
Chloroform	UNFI	10.000	ug/L	C	U	UNFI	10.000	ug/L	D	U	UNFI	10.000	ug/L	C	U
Chloromethane	UNFI	10.000	ug/L	C	UJ	UNFI	10.000	ug/L	D	UJ	UNFI	10.000	ug/L	C	UJ
Dibromochloromethane	UNFI	10.000	ug/L	C	U	UNFI	10.000	ug/L	D	U	UNFI	10.000	ug/L	C	U
Ethylbenzene	UNFI	10.000	ug/L	C	U	UNFI	10.000	ug/L	D	U	UNFI	10.000	ug/L	C	U
Methylene chloride	UNFI	10.000	ug/L	C	U	UNFI	11.000	ug/L	D	UJ	UNFI	10.000	ug/L	C	UJ
Styrene	UNFI	10.000	ug/L	C	U	UNFI	10.000	ug/L	D	U	UNFI	10.000	ug/L	C	U
Tetrachloroethene	UNFI	10.000	ug/L	C	U	UNFI	10.000	ug/L	D	U	UNFI	10.000	ug/L	C	U
Toluene	UNFI	10.000	ug/L	C	U	UNFI	10.000	ug/L	D	U	UNFI	10.000	ug/L	C	U
Trichloroethene	UNFI	10.000	ug/L	C	U	UNFI	10.000	ug/L	D	U	UNFI	10.000	ug/L	C	U
Vinyl Acetate	UNFI	10.000	ug/L	C	U	UNFI	10.000	ug/L	D	U	UNFI	10.000	ug/L	C	U
Vinyl chloride	UNFI	10.000	ug/L	C	UJ	UNFI	10.000	ug/L	D	U	UNFI	10.000	ug/L	C	U
Xylenes, Total	UNFI	10.000	ug/L	C	U	UNFI	10.000	ug/L	D	U	UNFI	10.000	ug/L	C	U
cis-1,3-Dichloropropene	UNFI	10.000	ug/L	C	U	UNFI	10.000	ug/L	D	U	UNFI	10.000	ug/L	C	U
trans-1,3-Dichloropropene	UNFI	10.000	ug/L	C	U	UNFI	10.000	ug/L	D	U	UNFI	10.000	ug/L	C	U
Semivolatile Organics															
1,2,4-Trichlorobenzene	UNFI	10.000	ug/L	C	U	UNFI	10.000	ug/L	D	U	UNFI	10.000	ug/L	C	U
1,2-Dichlorobenzene	UNFI	10.000	ug/L	C	U	UNFI	10.000	ug/L	D	U	UNFI	10.000	ug/L	C	U
1,3-Dichlorobenzene	UNFI	10.000	ug/L	C	U	UNFI	10.000	ug/L	D	U	UNFI	10.000	ug/L	C	U
1,4-Dichlorobenzene	UNFI	10.000	ug/L	C	U	UNFI	10.000	ug/L	D	U	UNFI	10.000	ug/L	C	U
2,4,5-Trichlorophenol	UNFI	25.000	ug/L	C	UJ	UNFI	25.000	ug/L	D	U	UNFI	25.000	ug/L	C	U
2,4,6-Trichlorophenol	UNFI	10.000	ug/L	C	UJ	UNFI	10.000	ug/L	D	U	UNFI	10.000	ug/L	C	U
2,4-Dichlorophenol	UNFI	10.000	ug/L	C	U	UNFI	10.000	ug/L	D	U	UNFI	10.000	ug/L	C	U
2,4-Dimethylphenol	UNFI	10.000	ug/L	C	U	UNFI	10.000	ug/L	D	U	UNFI	10.000	ug/L	C	U
2,4-Dinitrophenol	UNFI	50.000	ug/L	C	UJ	UNFI	25.000	ug/L	D	R	UNFI	25.000	ug/L	C	R
2,4-Dinitrotoluene	UNFI	10.000	ug/L	C	U	UNFI	10.000	ug/L	D	U	UNFI	10.000	ug/L	C	U
2,6-Dinitrotoluene	UNFI	10.000	ug/L	C	UJ	UNFI	10.000	ug/L	D	U	UNFI	10.000	ug/L	C	U
2-Chloronaphthalene	UNFI	10.000	ug/L	C	UJ	UNFI	10.000	ug/L	D	U	UNFI	10.000	ug/L	C	U
2-Chlorophenol	UNFI	10.000	ug/L	C	U	UNFI	10.000	ug/L	D	U	UNFI	10.000	ug/L	C	U
2-Methylnaphthalene	UNFI	10.000	ug/L	C	U	UNFI	10.000	ug/L	D	U	UNFI	10.000	ug/L	C	U
2-Methylphenol	UNFI	10.000	ug/L	C	U	UNFI	10.000	ug/L	D	U	UNFI	10.000	ug/L	C	U
2-Nitroaniline	UNFI	25.000	ug/L	C	UJ	UNFI	25.000	ug/L	D	U	UNFI	25.000	ug/L	C	U
2-Nitrophenol	UNFI	10.000	ug/L	C	U	UNFI	10.000	ug/L	D	U	UNFI	10.000	ug/L	C	U
3,3'-Dichlorobenzidine	UNFI	10.000	ug/L	C	U	UNFI	10.000	ug/L	D	U	UNFI	10.000	ug/L	C	U

TABLE E-11
(Continued)

PHASE II - CHEMICAL PARAMETERS

BORING NUMBER		IFP-SW-04				IFP-SW-02				IFP-SW-03			
SAMPLE NUMBER		112015				112022				112027			
SAMPLING DATE		04/29/93				04/30/93				05/01/93			
CHEMICAL PARAMETERS	FLTD	RESULTS	UNITS	L	VQ	FLTD	RESULTS	UNITS	L	VQ	FLTD	RESULTS	UNITS	L	VQ
Semivolatile Organics															
3-Nitroaniline	UNFI	25.000	ug/L	C	UJ	UNFI	25.000	ug/L	D	U	UNFI	25.000	ug/L	C	U
4,6-Dinitro-2-methylphenol	UNFI	25.000	ug/L	C	U	UNFI	25.000	ug/L	D	R	UNFI	25.000	ug/L	C	R
4-Bromophenyl phenyl ether	UNFI	10.000	ug/L	C	U	UNFI	10.000	ug/L	D	U	UNFI	10.000	ug/L	C	U
4-Chloro-3-methylphenol	UNFI	10.000	ug/L	C	U	UNFI	10.000	ug/L	D	U	UNFI	10.000	ug/L	C	U
4-Chlorophenylphenyl ether	UNFI	10.000	ug/L	C	U	UNFI	10.000	ug/L	D	U	UNFI	10.000	ug/L	C	U
4-Methylphenol	UNFI	10.000	ug/L	C	U	UNFI	10.000	ug/L	D	U	UNFI	10.000	ug/L	C	U
4-Nitroaniline	UNFI	25.000	ug/L	C	U	UNFI	25.000	ug/L	D	U	UNFI	25.000	ug/L	C	U
4-Nitrophenol	UNFI	25.000	ug/L	C	UJ	UNFI	25.000	ug/L	D	R	UNFI	25.000	ug/L	C	R
Acenaphthene	UNFI	10.000	ug/L	C	UJ	UNFI	10.000	ug/L	D	U	UNFI	10.000	ug/L	C	U
Acenaphthylene	UNFI	10.000	ug/L	C	UJ	UNFI	10.000	ug/L	D	U	UNFI	10.000	ug/L	C	U
Anthracene	UNFI	10.000	ug/L	C	U	UNFI	10.000	ug/L	D	U	UNFI	10.000	ug/L	C	U
Benzo(a)anthracene	UNFI	10.000	ug/L	C	U	UNFI	10.000	ug/L	D	U	UNFI	10.000	ug/L	C	U
Benzo(a)pyrene	UNFI	10.000	ug/L	C	U	UNFI	10.000	ug/L	D	U	UNFI	10.000	ug/L	C	U
Benzo(b)fluoranthene	UNFI	10.000	ug/L	C	U	UNFI	10.000	ug/L	D	U	UNFI	10.000	ug/L	C	U
Benzo(g,h,i)perylene	UNFI	10.000	ug/L	C	U	UNFI	10.000	ug/L	D	U	UNFI	10.000	ug/L	C	U
Benzo(k)fluoranthene	UNFI	10.000	ug/L	C	U	UNFI	10.000	ug/L	D	U	UNFI	10.000	ug/L	C	U
Benzoic acid	UNFI	50.000	ug/L	C	UJ	UNFI	50.000	ug/L	D	R	UNFI	50.000	ug/L	C	R
Benzyl alcohol	UNFI	10.000	ug/L	C	U	UNFI	10.000	ug/L	D	UJ	UNFI	10.000	ug/L	C	UJ
Butyl benzyl phthalate	UNFI	10.000	ug/L	C	U	UNFI	10.000	ug/L	D	UJ	UNFI	10.000	ug/L	C	UJ
Carbazole	UNFI	10.000	ug/L	C	U	UNFI	10.000	ug/L	D	U	UNFI	10.000	ug/L	C	U
Chrysene	UNFI	10.000	ug/L	C	U	UNFI	10.000	ug/L	D	U	UNFI	10.000	ug/L	C	U
Di-n-butyl phthalate	UNFI	10.000	ug/L	C	U	UNFI	10.000	ug/L	D	U	UNFI	10.000	ug/L	C	U
Di-n-octyl phthalate	UNFI	10.000	ug/L	C	UJ	UNFI	10.000	ug/L	D	R	UNFI	10.000	ug/L	C	R
Dibenzo(a,h)anthracene	UNFI	10.000	ug/L	C	U	UNFI	10.000	ug/L	D	UJ	UNFI	10.000	ug/L	C	UJ
Dibenzofuran	UNFI	10.000	ug/L	C	U	UNFI	10.000	ug/L	D	U	UNFI	10.000	ug/L	C	U
Diethyl phthalate	UNFI	10.000	ug/L	C	U	UNFI	10.000	ug/L	D	U	UNFI	10.000	ug/L	C	U
Dimethyl phthalate	UNFI	10.000	ug/L	C	UJ	UNFI	10.000	ug/L	D	U	UNFI	10.000	ug/L	C	U
Fluoranthene	UNFI	10.000	ug/L	C	U	UNFI	10.000	ug/L	D	U	UNFI	10.000	ug/L	C	U
Fluorene	UNFI	10.000	ug/L	C	U	UNFI	10.000	ug/L	D	U	UNFI	10.000	ug/L	C	U
Hexachlorobenzene	UNFI	10.000	ug/L	C	U	UNFI	10.000	ug/L	D	UJ	UNFI	10.000	ug/L	C	UJ
Hexachlorobutadiene	UNFI	10.000	ug/L	C	U	UNFI	10.000	ug/L	D	U	UNFI	10.000	ug/L	C	U
Hexachlorocyclopentadiene	UNFI	10.000	ug/L	C	UJ	UNFI	10.000	ug/L	D	UJ	UNFI	10.000	ug/L	C	UJ
Hexachloroethane	UNFI	10.000	ug/L	C	U	UNFI	10.000	ug/L	D	U	UNFI	10.000	ug/L	C	U
Indeno(1,2,3-cd)pyrene	UNFI	10.000	ug/L	C	U	UNFI	10.000	ug/L	D	UJ	UNFI	10.000	ug/L	C	UJ
Isophorone	UNFI	10.000	ug/L	C	U	UNFI	10.000	ug/L	D	U	UNFI	10.000	ug/L	C	U
N-Nitroso-di-n-propylamine	UNFI	10.000	ug/L	C	U	UNFI	10.000	ug/L	D	U	UNFI	10.000	ug/L	C	U
N-Nitrosodiphenylamine	UNFI	10.000	ug/L	C	U	UNFI	10.000	ug/L	D	U	UNFI	10.000	ug/L	C	U
Naphthalene	UNFI	10.000	ug/L	C	U	UNFI	10.000	ug/L	D	U	UNFI	10.000	ug/L	C	U
Nitrobenzene	UNFI	10.000	ug/L	C	U	UNFI	10.000	ug/L	D	U	UNFI	10.000	ug/L	C	U
Pentachlorophenol	UNFI	25.000	ug/L	C	U	UNFI	25.000	ug/L	D	UJ	UNFI	25.000	ug/L	C	UJ
Phenanthrene	UNFI	10.000	ug/L	C	U	UNFI	10.000	ug/L	D	U	UNFI	10.000	ug/L	C	U
Phenol	UNFI	10.000	ug/L	C	U	UNFI	10.000	ug/L	D	U	UNFI	10.000	ug/L	C	U

5174

TABLE E-11
(Continued)

PHASE II - CHEMICAL PARAMETERS

BORING NUMBER		IFP-SW-04				IFP-SW-02				IFP-SW-03			
SAMPLE NUMBER		112015				112022				112027			
SAMPLING DATE		04/29/93				04/30/93				05/01/93			
CHEMICAL PARAMETERS	FLTD	RESULTS	UNITS	L	VQ	FLTD	RESULTS	UNITS	L VQ	FLTD	RESULTS	UNITS	L VQ
Semivolatile Organics													
Pyrene	UNFI	10.000	ug/L	C	U	UNFI	10.000	ug/L	D U	UNFI	10.000	ug/L	C U
bis(2-Chloroethoxy)methane	UNFI	10.000	ug/L	C	U	UNFI	10.000	ug/L	D U	UNFI	10.000	ug/L	C U
bis(2-Chloroethyl)ether	UNFI	10.000	ug/L	C	U	UNFI	10.000	ug/L	D U	UNFI	10.000	ug/L	C U
bis(2-Chloroisopropyl) ether	UNFI	10.000	ug/L	C	UJ	UNFI	10.000	ug/L	D U	UNFI	10.000	ug/L	C U
bis(2-Ethylhexyl) phthalate	UNFI	10.000	ug/L	C	U	UNFI	10.000	ug/L	D UJ	UNFI	10.000	ug/L	C UJ
p-Chloroaniline	UNFI	10.000	ug/L	C	U	UNFI	10.000	ug/L	D U	UNFI	10.000	ug/L	C U
Pesticide Organics/PCBs													
4,4'-DDD	UNFI	0.100	ug/L	C	U	UNFI	0.100	ug/L	D U	UNFI	0.100	ug/L	C U
4,4'-DDE	UNFI	0.100	ug/L	C	U	UNFI	0.100	ug/L	D U	UNFI	0.100	ug/L	C U
4,4'-DDT	UNFI	0.100	ug/L	C	U	UNFI	0.100	ug/L	D U	UNFI	0.100	ug/L	C U
Aldrin	UNFI	0.050	ug/L	C	U	UNFI	0.050	ug/L	D U	UNFI	0.050	ug/L	C U
Aroclor-1016	UNFI	1.000	ug/L	C	U	UNFI	1.000	ug/L	D U	UNFI	1.000	ug/L	C U
Aroclor-1221	UNFI	2.000	ug/L	C	U	UNFI	2.000	ug/L	D U	UNFI	2.000	ug/L	C U
Aroclor-1232	UNFI	1.000	ug/L	C	U	UNFI	1.000	ug/L	D U	UNFI	1.000	ug/L	C U
Aroclor-1242	UNFI	1.000	ug/L	C	U	UNFI	1.000	ug/L	D U	UNFI	1.000	ug/L	C U
Aroclor-1248	UNFI	1.000	ug/L	C	U	UNFI	1.000	ug/L	D U	UNFI	1.000	ug/L	C U
Aroclor-1254	UNFI	1.000	ug/L	C	U	UNFI	1.000	ug/L	D U	UNFI	1.000	ug/L	C U
Aroclor-1260	UNFI	1.000	ug/L	C	U	UNFI	1.000	ug/L	D U	UNFI	1.000	ug/L	C U
Dieldrin	UNFI	0.100	ug/L	C	U	UNFI	0.100	ug/L	D U	UNFI	0.100	ug/L	C U
Endosulfan II	UNFI	0.100	ug/L	C	U	UNFI	0.100	ug/L	D U	UNFI	0.100	ug/L	C U
Endosulfan sulfate	UNFI	0.100	ug/L	C	U	UNFI	0.100	ug/L	D U	UNFI	0.100	ug/L	C U
Endosulfan-I	UNFI	0.050	ug/L	C	U	UNFI	0.050	ug/L	D U	UNFI	0.050	ug/L	C U
Endrin	UNFI	0.100	ug/L	C	U	UNFI	0.100	ug/L	D U	UNFI	0.100	ug/L	C U
Endrin aldehyde	UNFI	0.100	ug/L	C	U	UNFI	0.100	ug/L	D U	UNFI	0.100	ug/L	C U
Endrin ketone	UNFI	0.100	ug/L	C	U	UNFI	0.100	ug/L	D U	UNFI	0.100	ug/L	C U
Heptachlor	UNFI	0.050	ug/L	C	U	UNFI	0.050	ug/L	D U	UNFI	0.050	ug/L	C U
Heptachlor epoxide	UNFI	0.050	ug/L	C	U	UNFI	0.050	ug/L	D U	UNFI	0.050	ug/L	C U
Methoxychlor	UNFI	0.500	ug/L	C	U	UNFI	0.500	ug/L	D U	UNFI	0.500	ug/L	C U
Toxaphene	UNFI	5.000	ug/L	C	U	UNFI	5.000	ug/L	D U	UNFI	5.000	ug/L	C U
alpha-BHC	UNFI	0.050	ug/L	C	UJ	UNFI	0.050	ug/L	D UJ	UNFI	0.050	ug/L	C UJ
alpha-Chlordane	UNFI	0.050	ug/L	C	U	UNFI	0.050	ug/L	D U	UNFI	0.050	ug/L	C U
beta-BHC	UNFI	0.050	ug/L	C	U	UNFI	0.050	ug/L	D U	UNFI	0.050	ug/L	C U
delta-BHC	UNFI	0.050	ug/L	C	UJ	UNFI	0.050	ug/L	D UJ	UNFI	0.050	ug/L	C UJ
gamma-BHC (Lindane)	UNFI	0.050	ug/L	C	UJ	UNFI	0.050	ug/L	D UJ	UNFI	0.050	ug/L	C UJ
gamma-Chlordane	UNFI	0.050	ug/L	C	U	UNFI	0.050	ug/L	D U	UNFI	0.050	ug/L	C U
General Chemistry													
Alkalinity	UNFI	245.000	mg/L	B	-	UNFI	395.000	mg/L	B -	UNFI	195.000	mg/L	B -
Ammonia		NA				UNFI	0.100	mg/L	B U	UNFI	0.100	mg/L	B U

TABLE E-11
(Continued)

PHASE II - CHEMICAL PARAMETERS

BORING NUMBER		IFP-SW-04				IFP-SW-02				IFP-SW-03			
SAMPLE NUMBER		112015				112022				112027			
SAMPLING DATE		04/29/93				04/30/93				05/01/93			
CHEMICAL PARAMETERS	FLTD	RESULTS	UNITS	L	VQ	FLTD	RESULTS	UNITS	L	VQ	FLTD	RESULTS	UNITS	L	VQ
General Chemistry															
Chloride	UNFI	23.600	mg/L	B	-	UNFI	4.630	mg/L	B	-	UNFI	23.650	mg/L	B	-
Fluoride	UNFI	0.210	mg/L	B	-	UNFI	0.390	mg/L	B	-	UNFI	0.210	mg/L	B	-
Nitrate	UNFI	1.570	mg/L	B	J	UNFI	0.100	mg/L	B	R	UNFI	1.490	mg/L	B	R
Phenols	UNFI	0.010	mg/L	B	U	UNFI	0.010	mg/L	B	U	UNFI	0.010	mg/L	B	U
Phosphorus	UNFI	0.050	mg/L	B	-		NA					NA			
Sulfate	UNFI	66.700	mg/L	B	-	UNFI	133.900	mg/L	B	-	UNFI	77.400	mg/L	B	-
Sulfide	UNFI	0.500	mg/L	B	U	UNFI	0.500	mg/L	B	U	UNFI	0.500	mg/L	B	U
Total Kjeldahl Nitrogen	UNFI	0.430	mg/L	B	-	UNFI	0.180	mg/L	B	-	UNFI	0.320	mg/L	B	-
Total Organic Carbon	UNFI	2.290	mg/L	B	-	UNFI	2.140	mg/L	B	-	UNFI	1.980	mg/L	B	-
Total Organic Halides	UNFI	10.000	mg/L	B	U	UNFI	0.010	mg/L	B	U	UNFI	0.010	mg/L	B	U
Total Organic Nitrogen	UNFI	0.430	mg/L	B	-	UNFI	0.180	mg/L	B	-	UNFI	0.320	mg/L	B	U
Total Phosphorous		NA				UNFI	0.180	mg/L	B	-	UNFI	0.200	mg/L	B	-

0211

- 5174

TABLE E-12A

INACTIVE FLYASH PILE
RI/FS GROUNDWATER RESULTS
OPERABLE UNIT 2 REMEDIAL INVESTIGATION
FERNALD ENVIRONMENTAL MANAGEMENT PROJECT

PHASE I - RADIOLOGICAL PARAMETERS

BORING NUMBER		1016				1016				1016			
SAMPLE NUMBER		003062				003906				066819			
SAMPLING DATE		03/28/88				02/26/89				12/13/89			
RADIOLOGICAL PARAMETERS	FLTD	RESULTS	UNITS	VQ	FLTD	RESULTS	UNITS	VQ	FLTD	RESULTS	UNITS	VQ
CS-137	*U	20.000	pci/L	R	*U	20.000	pci/L	R		NA		
NP-237	*U	1.000	pci/L	R	*U	1.000	pci/L	U		NA		
PU-238	*U	1.000	pci/L	UJ	*U	1.000	pci/L	U		NA		
PU-239/240	*U	1.000	pci/L	UJ	*U	1.000	pci/L	U		NA		
RA-226	*U	1.000	pci/L	R	*U	1.000	pci/L	UJ		NA		
RA-228	*U	3.000	pci/L	UJ	*U	3.000	pci/L	UJ		NA		
RU-106	*U	150.000	pci/L	R	*U	150.000	pci/L	R		NA		
SR-90	*U	5.000	pci/L	R	*U	5.000	pci/L	U		NA		
TC-99	*U	30.000	pci/L	UJ	*U	30.000	pci/L	UJ		NA		
TC-99		NA				NA			UNKN	30.000	pci/L	U
TH-228	*U	1.000	pci/L	UJ	*U	1.000	pci/L	U		NA		
TH-228		NA				NA			UNKN	1.000	pci/L	U
TH-230	*U	1.000	pci/L	UJ	*U	1.000	pci/L	U		NA		
TH-230		NA				NA			UNKN	1.180	pci/L	J
TH-232	*U	1.000	pci/L	UJ	*U	1.000	pci/L	U		NA		
TH-TOTAL		NA			*U	3.000	ug/L	U		NA		
U-234	*U	1.000	pci/L	UJ	*U	2.500	pci/L	-		NA		
U-234		NA				NA			UNKN	1.000	pci/L	U
U-235		NA				NA			UNKN	1.000	pci/L	U
U-235/236	*U	1.000	pci/L	UJ	*U	1.000	pci/L	U		NA		
U-238	*U	1.000	pci/L	UJ	*U	2.600	pci/L	-		NA		
U-238		NA				NA			UNKN	1.000	pci/L	U
U-TOTAL	*U	1.000	ug/L	R	*U	9.000	ug/L	J		NA		
U-TOTAL		NA				NA			UNKN	2.030	ug/L	-

0212

5174

TABLE E-12A
(Continued)

PHASE I - RADIOLOGICAL PARAMETERS

BORING NUMBER		1047				1047				1047			
SAMPLE NUMBER		003102				003369				003648			
SAMPLING DATE		04/20/88				07/24/88				10/23/88			
RADIOLOGICAL PARAMETERS	FLTD	RESULTS	UNITS	VQ	FLTD	RESULTS	UNITS	VQ	FLTD	RESULTS	UNITS	VQ
CS-137	*U	20.000	pci/L	R	*U	20.000	pci/L	R		NA		
CS-137		NA				NA			UNKN	20.000	pci/L	R
NP-237	*U	1.000	pci/L	R	*U	1.000	pci/L	UJ		NA		
NP-237		NA				NA			UNKN	1.000	pci/L	UJ
PU-238	*U	1.000	pci/L	UJ	*U	1.000	pci/L	UJ		NA		
PU-238		NA				NA			UNKN	1.000	pci/L	UJ
PU-239/240	*U	1.000	pci/L	UJ	*U	1.000	pci/L	UJ		NA		
PU-239/240		NA				NA			UNKN	1.000	pci/L	UJ
RA-226	*U	1.000	pci/L	UJ	*U	1.000	pci/L	U		NA		
RA-226		NA				NA			UNKN	1.000	pci/L	U
RA-228	*U	3.000	pci/L	UJ	*U	3.000	pci/L	U		NA		
RA-228		NA				NA			UNKN	3.000	pci/L	U
RU-106	*U	150.000	pci/L	R	*U	150.000	pci/L	R		NA		
RU-106		NA				NA			UNKN	150.000	pci/L	R
SR-90	*U	5.000	pci/L	U	*U	5.000	pci/L	U		NA		
SR-90		NA				NA			UNKN	5.000	pci/L	U
TC-99	*U	30.000	pci/L	U	*U	30.000	pci/L	U		NA		
TC-99		NA				NA			UNKN	43.700	pci/L	D
TH-228	*U	1.000	pci/L	UJ	*U	1.000	pci/L	UJ		NA		
TH-228		NA				NA			UNKN	1.100	pci/L	-
TH-230	*U	1.000	pci/L	UJ	*U	1.000	pci/L	UJ		NA		
TH-230		NA				NA			UNKN	1.000	pci/L	J
TH-232	*U	1.000	pci/L	UJ	*U	1.000	pci/L	UJ		NA		
TH-232		NA				NA			UNKN	1.100	pci/L	J
TH-TOTAL		NA			*U	5.000	ug/L	J		NA		
TH-TOTAL		NA				NA			UNKN	10.000	ug/L	-
U-234	*U	3.700	pci/L	J	*U	7.400	pci/L	J		NA		
U-234		NA				NA			UNKN	7.300	pci/L	J
U-235/236	*U	1.000	pci/L	UJ	*U	1.000	pci/L	UJ		NA		
U-235/236		NA				NA			UNKN	1.000	pci/L	UJ
U-238	*U	2.500	pci/L	J	*U	3.200	pci/L	J		NA		
U-238		NA				NA			UNKN	3.600	pci/L	J
U-TOTAL	*U	6.000	ug/L	R	*U	9.000	ug/L	-		NA		

TABLE E-12A
(Continued)

PHASE I - RADIOLOGICAL PARAMETERS

BORING NUMBER		1047				1047				2016			
SAMPLE NUMBER		003855				066830				003063			
SAMPLING DATE		01/22/89				12/12/89				03/28/88			
RADIOLOGICAL PARAMETERS	FLTD	RESULTS	UNITS	VQ	FLTD	RESULTS	UNITS	VQ	FLTD	RESULTS	UNITS	VQ
CS-137	*U	20.000	pci/L	R		NA			*U	20.000	pci/L	R
NP-237	*U	1.000	pci/L	U		NA			*U	1.000	pci/L	R
PU-238	*U	1.000	pci/L	UJ		NA			*U	1.000	pci/L	UJ
PU-239/240	*U	1.000	pci/L	UJ		NA			*U	1.000	pci/L	UJ
RA-226	*U	1.000	pci/L	U		NA			*U	1.000	pci/L	R
RA-228	*U	3.400	pci/L	UJ		NA			*U	3.000	pci/L	UJ
RU-106	*U	150.000	pci/L	R		NA			*U	150.000	pci/L	R
SR-90	*U	5.000	pci/L	U		NA			*U	5.000	pci/L	R
TC-99	*U	30.000	pci/L	U		NA			*U	30.000	pci/L	UJ
TC-99		NA			UNKN	30.000	pci/L	U		NA		
TH-228	*U	1.000	pci/L	U		NA			*U	1.000	pci/L	UJ
TH-228		NA			UNKN	1.000	pci/L	U		NA		
TH-230	*U	1.000	pci/L	U		NA			*U	1.000	pci/L	UJ
TH-230		NA			UNKN	1.000	pci/L	U		NA		
TH-232	*U	1.000	pci/L	U		NA			*U	1.000	pci/L	UJ
TH-TOTAL	*U	3.000	ug/L	U		NA				NA		
U-234	*U	3.700	pci/L	-		NA			*U	7.700	pci/L	J
U-234		NA			UNKN	3.990	pci/L	-		NA		
U-235		NA			UNKN	1.000	pci/L	U		NA		
U-235/236	*U	1.000	pci/L	U		NA			*U	1.000	pci/L	UJ
U-238	*U	2.100	pci/L	-		NA			*U	6.200	pci/L	J
U-238		NA			UNKN	2.810	pci/L	-		NA		
U-TOTAL	*U	6.000	ug/L	-		NA			*U	21.000	ug/L	R
U-TOTAL		NA			UNKN	10.300	ug/L	-		NA		

0214

0 5174

TABLE E-12A
(Continued)

PHASE I - RADIOLOGICAL PARAMETERS

BORING NUMBER		2016				2016				2016			
SAMPLE NUMBER		003434				003685				003883			
SAMPLING DATE		08/03/88				11/04/88				02/07/89			
RADIOLOGICAL PARAMETERS	FLTD	RESULTS	UNITS	VQ	FLTD	RESULTS	UNITS	VQ	FLTD	RESULTS	UNITS	VQ
CS-137	*U	20.000	pci/L	R	*U	20.000	pci/L	R	*U	20.000	pci/L	R
NP-237	*U	1.000	pci/L	U	*U	1.000	pci/L	U	*U	1.000	pci/L	U
PU-238	*U	1.000	pci/L	UJ	*U	1.000	pci/L	UJ	*U	1.000	pci/L	U
PU-239/240	*U	1.000	pci/L	UJ	*U	1.000	pci/L	UJ	*U	1.000	pci/L	U
RA-226	*U	1.000	pci/L	U	*U	1.000	pci/L	U	*U	1.000	pci/L	U
RA-228	*U	3.000	pci/L	UJ	*U	3.000	pci/L	U	*U	3.200	pci/L	UJ
RU-106	*U	150.000	pci/L	R	*U	150.000	pci/L	R	*U	150.000	pci/L	R
SR-90	*U	5.000	pci/L	U	*U	5.000	pci/L	U	*U	5.000	pci/L	U
TC-99	*U	30.000	pci/L	U	*U	30.000	pci/L	U	*U	30.000	pci/L	U
TH-228	*U	1.000	pci/L	UJ	*U	1.000	pci/L	U	*U	1.000	pci/L	U
TH-230	*U	1.000	pci/L	UJ	*U	1.000	pci/L	U	*U	1.000	pci/L	U
TH-232	*U	1.000	pci/L	UJ	*U	1.000	pci/L	U	*U	1.000	pci/L	U
TH-TOTAL	*U	2.000	ug/L	UJ	*U	2.000	ug/L	U	*U	3.000	ug/L	U
U-234	*U	5.300	pci/L	J	*U	4.600	pci/L	-	*U	6.600	pci/L	-
U-235/236	*U	1.000	pci/L	UJ	*U	1.000	pci/L	U	*U	1.000	pci/L	U
U-238	*U	6.400	pci/L	J	*U	5.600	pci/L	J	*U	8.000	pci/L	-
U-TOTAL	*U	18.000	ug/L	-	*U	17.000	ug/L	-	*U	22.000	ug/L	J

TABLE E-12A
(Continued)

PHASE I - RADIOLOGICAL PARAMETERS

BORING NUMBER		2016				2016				2047			
SAMPLE NUMBER		004152				004213				003998			
SAMPLING DATE		07/26/89				03/04/90				01/22/89			
RADIOLOGICAL PARAMETERS	FLTD	RESULTS	UNITS	VQ	FLTD	RESULTS	UNITS	VQ	FLTD	RESULTS	UNITS	VQ
CS-137		NA			*U	20.000	pci/L	R	*U	20.000	pci/L	R
CS-137	UNKN	20.000	pci/L	UJ		NA				NA		
NP-237		NA			*U	1.000	pci/L	U	*U	1.000	pci/L	U
NP-237	UNKN	1.000	pci/L	U		NA				NA		
PU-238		NA			*U	1.000	pci/L	U	*U	1.000	pci/L	UJ
PU-238	UNKN	1.000	pci/L	U		NA				NA		
PU-239/240		NA			*U	1.000	pci/L	U	*U	1.000	pci/L	UJ
PU-239/240	UNKN	1.000	pci/L	U		NA				NA		
RA-226		NA			*U	1.000	pci/L	NV	*U	1.000	pci/L	U
RA-226	UNKN	1.000	pci/L	UJ		NA				NA		
RA-228		NA			*U	3.000	pci/L	U	*U	3.200	pci/L	UJ
RA-228	UNKN	3.000	pci/L	U		NA				NA		
RU-106		NA			*U	150.000	pci/L	R	*U	150.000	pci/L	R
RU-106	UNKN	150.000	pci/L	UJ		NA				NA		
SR-90		NA			*U	5.000	pci/L	U	*U	5.000	pci/L	U
SR-90	UNKN	5.000	pci/L	U		NA				NA		
TC-99		NA			*U	30.000	pci/L	U	*U	30.000	pci/L	U
TC-99	UNKN	30.000	pci/L	U		NA				NA		
TH-228		NA			*U	1.000	pci/L	U	*U	1.000	pci/L	U
TH-228	UNKN	1.000	pci/L	UJ		NA				NA		
TH-230		NA			*U	1.000	pci/L	U	*U	1.000	pci/L	U
TH-230	UNKN	1.000	pci/L	UJ		NA				NA		
TH-232		NA			*U	1.000	pci/L	U	*U	1.000	pci/L	U
TH-232	UNKN	1.000	pci/L	UJ		NA				NA		
TH-TOTAL		NA			*U	1.940	ug/L	U	*U	4.000	ug/L	U
TH-TOTAL	UNKN	2.000	ug/L	UJ		NA				NA		
U-234		NA			*U	4.280	pci/L	-	*U	5.100	pci/L	-
U-234	UNKN	5.100	pci/L	-		NA				NA		
U-235/236		NA			*U	1.000	pci/L	U	*U	1.000	pci/L	U
U-235/236	UNKN	1.000	pci/L	U		NA				NA		
U-238		NA			*U	5.030	pci/L	-	*U	4.500	pci/L	-
U-238	UNKN	5.800	pci/L	-		NA				NA		
U-TOTAL		NA			*U	29.400	ug/L	J	*U	15.000	ug/L	-
U-TOTAL	UNKN	17.000	ug/L	-		NA				NA		

TABLE E-12A
(Continued)

PHASE I - RADIOLOGICAL PARAMETERS

BORING NUMBER		2047				2047				2047			
SAMPLE NUMBER		004093				004160				004220			
SAMPLING DATE		05/02/89				07/28/89				04/03/90			
RADIOLOGICAL PARAMETERS	FLTD	RESULTS	UNITS	VQ	FLTD	RESULTS	UNITS	VQ	FLTD	RESULTS	UNITS	VQ
CS-137	*U	20.000	pci/L	R	*U	20.000	pci/L	UJ		NA		
CS-137		NA				NA			UNKN	20.000	pci/L	R
NP-237	*U	1.000	pci/L	UJ	*U	1.000	pci/L	U		NA		
NP-237		NA				NA			UNKN	1.000	pci/L	U
PU-238	*U	1.000	pci/L	U	*U	1.000	pci/L	U		NA		
PU-238		NA				NA			UNKN	1.000	pci/L	U
PU-239/240	*U	1.000	pci/L	U	*U	1.000	pci/L	U		NA		
PU-239/240		NA				NA			UNKN	1.000	pci/L	U
RA-226	*U	1.000	pci/L	U	*U	1.000	pci/L	UJ		NA		
RA-226		NA				NA			UNKN	1.000	pci/L	UJ
RA-228	*U	3.000	pci/L	UJ	*U	3.000	pci/L	U		NA		
RA-228		NA				NA			UNKN	3.000	pci/L	UJ
RU-106	*U	150.000	pci/L	R	*U	150.000	pci/L	UJ		NA		
RU-106		NA				NA			UNKN	150.000	pci/L	R
SR-90	*U	5.000	pci/L	U	*U	5.000	pci/L	U		NA		
SR-90		NA				NA			UNKN	5.000	pci/L	R
TC-99	*U	30.000	pci/L	U	*U	30.000	pci/L	U		NA		
TC-99		NA				NA			UNKN	30.000	pci/L	R
TH-228	*U	1.000	pci/L	U	*U	1.000	pci/L	UJ		NA		
TH-228		NA				NA			UNKN	1.000	pci/L	R
TH-230	*U	1.000	pci/L	U	*U	1.000	pci/L	UJ		NA		
TH-230		NA				NA			UNKN	1.090	pci/L	R
TH-232	*U	1.000	pci/L	U	*U	1.000	pci/L	UJ		NA		
TH-232		NA				NA			UNKN	1.000	pci/L	R
TH-TOTAL	*U	5.000	ug/L	U	*U	4.000	ug/L	UJ		NA		
TH-TOTAL		NA				NA			UNKN	1.900	ug/L	R
U-234	*U	3.200	pci/L	-	*U	3.700	pci/L	-		NA		
U-234		NA				NA			UNKN	4.720	pci/L	J
U-235/236	*U	1.000	pci/L	U	*U	1.000	pci/L	U		NA		
U-235/236		NA				NA			UNKN	1.000	pci/L	UJ
U-238	*U	3.400	pci/L	-	*U	3.800	pci/L	-		NA		
U-238		NA				NA			UNKN	4.660	pci/L	J
U-TOTAL	*U	10.000	ug/L	-	*U	9.000	ug/L	-		NA		
U-TOTAL		NA				NA			UNKN	13.800	ug/L	-

TABLE E-12A
(Continued)

PHASE I - RADIOLOGICAL PARAMETERS

BORING NUMBER		2402					3016		
SAMPLE NUMBER		038304					003082		
SAMPLING DATE		01/28/92					04/08/88		
RADIOLOGICAL PARAMETERS	FLTD	RESULTS	UNITS	VQ	FLTD	RESULTS	UNITS	VQ
CS-137		NA			*U	20.000	pci/L	R
CS-137	UNKN	20.000	pci/L	U		NA		
GROSS ALPHA	U	9.610	pci/L	NV		NA		
GROSS BETA	UNKN	8.560	pci/L	NV		NA		
NP-237		NA			*U	1.000	pci/L	UJ
PU-238		NA			*U	1.000	pci/L	UJ
PU-238	UNKN	1.000	pci/L	U		NA		
PU-239/240		NA			*U	1.000	pci/L	UJ
PU-239/240	UNKN	1.000	pci/L	U		NA		
RA-226		NA			*U	1.000	pci/L	R
RA-228		NA			*U	3.000	pci/L	U
RA-228	UNKN	3.000	pci/L	U		NA		
RU-106		NA			*U	150.000	pci/L	R
RU-106	UNKN	150.000	pci/L	U		NA		
SR-90		NA			*U	5.000	pci/L	U
SR-90	U	5.000	pci/L	U		NA		
TC-99		NA			*U	30.000	pci/L	U
TC-99	UNKN	30.000	pci/L	UJ		NA		
TH-228		NA			*U	1.400	pci/L	J
TH-228	U	1.000	pci/L	U		NA		
TH-230		NA			*U	1.000	pci/L	UJ
TH-230	UNKN	1.000	pci/L	U		NA		
TH-232		NA			*U	1.000	pci/L	UJ
TH-232	UNKN	1.000	pci/L	U		NA		
TH-TOTAL	UNKN	1.200	ug/L	U		NA		
U-234		NA			*U	5.300	pci/L	J
U-234	U	7.730	pci/L	-		NA		
U-235/236		NA			*U	1.000	pci/L	UJ
U-235/236	UNKN	1.000	pci/L	U		NA		
U-238		NA			*U	4.400	pci/L	J
U-238	UNKN	9.970	pci/L	-		NA		
U-TOTAL		NA			*U	11.000	ug/L	J
U-TOTAL	UNKN	27.300	ug/L	-		NA		

0218

5174

TABLE E-12A
(Continued)

PHASE I - RADIOLOGICAL PARAMETERS

BORING NUMBER		3016				3016				3016			
SAMPLE NUMBER		003435				003686				003882			
SAMPLING DATE		08/03/88				11/04/88				02/07/89			
RADIOLOGICAL PARAMETERS	FLTD	RESULTS	UNITS	VQ	FLTD	RESULTS	UNITS	VQ	FLTD	RESULTS	UNITS	VQ
CS-137	*U	20.000	pci/L	R	*U	20.000	pci/L	R	*U	20.000	pci/L	R
NP-237	*U	1.000	pci/L	U	*U	1.000	pci/L	U	*U	1.000	pci/L	U
PU-238	*U	1.000	pci/L	UJ	*U	1.000	pci/L	UJ	*U	1.000	pci/L	U
PU-239/240	*U	1.000	pci/L	UJ	*U	1.000	pci/L	UJ	*U	1.000	pci/L	U
RA-226	*U	1.000	pci/L	U	*U	1.000	pci/L	U	*U	1.000	pci/L	U
RA-228	*U	3.000	pci/L	UJ	*U	3.000	pci/L	U	*U	3.100	pci/L	UJ
RU-106	*U	150.000	pci/L	R	*U	150.000	pci/L	R	*U	150.000	pci/L	R
SR-90	*U	5.000	pci/L	U	*U	5.000	pci/L	U	*U	5.000	pci/L	U
TC-99	*U	30.000	pci/L	U	*U	30.000	pci/L	U	*U	30.000	pci/L	U
TH-228	*U	1.000	pci/L	UJ	*U	1.000	pci/L	U	*U	1.000	pci/L	U
TH-230	*U	1.000	pci/L	UJ	*U	1.000	pci/L	U	*U	1.000	pci/L	U
TH-232	*U	1.000	pci/L	UJ	*U	1.000	pci/L	U	*U	1.000	pci/L	U
TH-TOTAL	*U	3.000	ug/L	UJ	*U	2.000	ug/L	U	*U	3.000	ug/L	U
U-234	*U	3.300	pci/L	J	*U	3.300	pci/L	-	*U	3.300	pci/L	-
U-235/236	*U	1.000	pci/L	UJ	*U	1.000	pci/L	U	*U	1.000	pci/L	U
U-238	*U	3.500	pci/L	J	*U	3.200	pci/L	J	*U	2.900	pci/L	-
U-TOTAL	*U	9.000	ug/L	-	*U	8.000	ug/L	-	*U	7.000	ug/L	J

TABLE E-12A
(Continued)

PHASE I - RADIOLOGICAL PARAMETERS

BORING NUMBER		3016		
SAMPLE NUMBER		004241		
SAMPLING DATE		03/04/90		
RADIOLOGICAL PARAMETERS	FLTD	RESULTS	UNITS	VQ
CS-137	*U	20.000	pci/L	R
NP-237	*U	1.000	pci/L	U
PU-238	*U	1.000	pci/L	U
PU-239/240	*U	1.000	pci/L	U
RA-226	*U	1.000	pci/L	NV
RA-228	*U	3.000	pci/L	U
RU-106	*U	150.000	pci/L	R
SR-90	*U	5.000	pci/L	U
TC-99	*U	30.000	pci/L	U
TH-228	*U	1.000	pci/L	U
TH-230	*U	1.000	pci/L	U
TH-232	*U	1.000	pci/L	U
TH-TOTAL	*U	1.430	ug/L	U
U-234	*U	3.050	pci/L	-
U-235/236	*U	1.000	pci/L	U
U-238	*U	2.800	pci/L	-
U-TOTAL	*U	13.400	ug/L	J

0220

5174

TABLE E-12A
(Continued)

PHASE I - RADIOLOGICAL PARAMETERS

BORING NUMBER		4016				4016		
SAMPLE NUMBER		004090				066867		
SAMPLING DATE		05/01/89				12/12/89		
RADIOLOGICAL PARAMETERS	FLTD	RESULTS	UNITS	VQ	FLTD	RESULTS	UNITS	VQ
CS-137	*U	20.000	pci/L	R		NA		
NP-237	*U	1.000	pci/L	U		NA		
PU-238	*U	1.000	pci/L	U		NA		
PU-239/240	*U	1.000	pci/L	U		NA		
RA-226	*U	1.000	pci/L	U		NA		
RA-228	*U	3.000	pci/L	UJ		NA		
RU-106	*U	150.000	pci/L	R		NA		
SR-90	*U	5.000	pci/L	U		NA		
TC-99	*U	30.000	pci/L	U		NA		
TC-99		NA			UNKN	30.000	pci/L	U
TH-228	*U	1.000	pci/L	U		NA		
TH-228		NA			UNKN	1.000	pci/L	U
TH-230	*U	1.000	pci/L	U		NA		
TH-230		NA			UNKN	1.430	pci/L	J
TH-232	*U	1.000	pci/L	U		NA		
TH-TOTAL	*U	2.000	ug/L	U		NA		
U-234	*U	1.000	pci/L	U		NA		
U-234		NA			UNKN	1.000	pci/L	U
U-235		NA			UNKN	1.000	pci/L	U
U-235/236	*U	1.000	pci/L	U		NA		
U-238	*U	1.000	pci/L	U		NA		
U-238		NA			UNKN	1.000	pci/L	U
U-TOTAL	*U	1.000	ug/L	U		NA		
U-TOTAL		NA			UNKN	1.000	ug/L	U

TABLE E-12A
(Continued)

PHASE I - CHEMICAL PARAMETERS

BORING NUMBER		1016					1016					1016				
SAMPLE NUMBER		003062					003906					004060				
SAMPLING DATE		03/28/88					02/26/89					03/29/89				
CHEMICAL PARAMETERS	FLTD	RESULTS	UNITS	L	VQ		FLTD	RESULTS	UNITS	L	VQ	FLTD	RESULTS	UNITS	L	VQ
Inorganics																
Aluminum	FILT	0.040	mg/L	C	U			NA					NA			
Antimony	FILT	0.030	mg/L	C	U			NA					NA			
Arsenic		NA					FILT	0.003	mg/L	C	U		NA			
Arsenic	U	0.030	mg/L	C	U			NA					NA			
Arsenic	UNKN	0.002	mg/L	C	U			NA					NA			
Barium		NA					FILT	0.059	mg/L	C	-		NA			
Barium	UNKN	0.063	mg/L	C	-			NA					NA			
Beryllium	FILT	0.001	mg/L	C	U			NA					NA			
Cadmium		NA					FILT	0.005	mg/L	C	U		NA			
Cadmium	UNKN	0.005	mg/L	C	U			NA					NA			
Calcium		NA					FILT	180.000	mg/L	C	-		NA			
Calcium	UNKN	19.200	mg/L	C	-			NA					NA			
Chromium		NA					FILT	0.030	mg/L	C	-		NA			
Chromium	U	0.010	mg/L	C	U			NA					NA			
Chromium	UNKN	0.010	mg/L	C	U			NA					NA			
Cobalt	FILT	0.020	mg/L	C	U			NA					NA			
Copper		NA					FILT	0.010	mg/L	C	U		NA			
Copper	UNKN	0.010	mg/L	C	UJ			NA					NA			
Cyanide	UNKN	0.010	mg/L	C	U			NA					NA			
Iron		NA					FILT	0.090	mg/L	C	-		NA			
Iron	UNKN	2.500	mg/L	C	-			NA					NA			
Lead		NA					FILT	0.002	mg/L	C	U		NA			
Lead	UNKN	0.002	mg/L	C	U			NA					NA			
Magnesium		NA					FILT	31.000	mg/L	C	-		NA			
Magnesium	U	29.100	mg/L	C	-			NA					NA			
Magnesium	UNKN	37.900	mg/L	C	-			NA					NA			
Manganese		NA					FILT	0.005	mg/L	C	U		NA			
Manganese	UNKN	0.005	mg/L	C	-			NA					NA			
Mercury		NA					FILT	0.000	mg/L	C	J		NA			
Mercury	UNKN	0.001	mg/L	C	UJ			NA					NA			
Molybdenum	FILT	0.010	mg/L	C	U		FILT	0.010	mg/L	C	U		NA			
Nickel		NA					FILT	0.030	mg/L	C	U		NA			
Nickel	UNKN	0.020	mg/L	C	U			NA					NA			
Potassium		NA					FILT	1.500	mg/L	C	-		NA			
Potassium	UNKN	1.110	mg/L	C	U			NA					NA			
Selenium		NA					FILT	0.005	mg/L	C	-		NA			
Selenium	UNKN	0.004	mg/L	C	-			NA					NA			
Silver		NA					FILT	0.010	mg/L	C	U		NA			
Silver	U	0.005	mg/L	C	U			NA					NA			
Silver	UNKN	0.005	mg/L	C	U			NA					NA			
Sodium		NA					FILT	5.400	mg/L	C	-		NA			
Sodium	UNKN	4.100	mg/L	C	-			NA					NA			

0222

5174

TABLE E-12A
(Continued)

PHASE I - CHEMICAL PARAMETERS

BORING NUMBER		1016				1016				1016			
SAMPLE NUMBER		003062				003906				004060			
SAMPLING DATE		03/28/88				02/26/89				03/29/89			
CHEMICAL PARAMETERS	FLTD	RESULTS	UNITS	L	VQ	FLTD	RESULTS	UNITS	L VQ	FLTD	RESULTS	UNITS	L VQ
Inorganics													
Thallium	FILT	0.003	mg/L	C	U		NA				NA		
Vanadium	FILT	0.010	mg/L	C	U		NA				NA		
Zinc	FILT	0.027	mg/L	C	-		NA				NA		
Volatile Organics													
1,1,1-Trichloroethane	UNFI	2.000	ug/L	C	J		NA				NA		
1,1,2,2-Tetrachloroethane	UNFI	5.000	ug/L	C	U		NA				NA		
1,1,2-Trichloroethane	UNKN	5.000	ug/L	C	U		NA				NA		
1,1-Dichloroethane	UNFI	5.000	ug/L	C	U		NA				NA		
1,1-Dichloroethene	UNFI	5.000	ug/L	C	U		NA				NA		
1,2-Dichloroethane	UNFI	5.000	ug/L	C	U		NA				NA		
1,2-Dichloroethene	UNFI	5.000	ug/L	C	U		NA				NA		
1,2-Dichloropropane	UNFI	5.000	ug/L	C	U		NA				NA		
2-Butanone	UNFI	10.000	ug/L	C	U		NA				NA		
2-Hexanone	UNFI	10.000	ug/L	C	U		NA				NA		
4-Methyl-2-pentanone	UNFI	10.000	ug/L	C	U		NA				NA		
Acetone	UNFI	10.000	ug/L	C	U		NA				NA		
Benzene	UNFI	5.000	ug/L	C	U		NA				NA		
Bromodichloromethane	UNFI	5.000	ug/L	C	U		NA				NA		
Bromoform	UNFI	5.000	ug/L	C	U		NA				NA		
Bromomethane	UNFI	10.000	ug/L	C	U		NA				NA		
Carbon Tetrachloride	UNFI	5.000	ug/L	C	U		NA				NA		
Carbon disulfide	UNFI	5.000	ug/L	C	U		NA				NA		
Chlorobenzene	UNFI	5.000	ug/L	C	U		NA				NA		
Chloroethane	UNFI	10.000	ug/L	C	U		NA				NA		
Chloroform	UNFI	5.000	ug/L	C	U		NA				NA		
Chloromethane	UNFI	10.000	ug/L	C	U		NA				NA		
Dibromochloromethane	UNFI	5.000	ug/L	C	U		NA				NA		
Ethylbenzene	UNFI	5.000	ug/L	C	U		NA				NA		
Methylene chloride	UNFI	5.000	ug/L	C	U		NA				NA		
Styrene	UNFI	5.000	ug/L	C	U		NA				NA		
Tetrachloroethene	UNFI	5.000	ug/L	C	U		NA				NA		
Toluene	UNFI	5.000	ug/L	C	U		NA				NA		
Trichloroethene	UNFI	5.000	ug/L	C	U		NA				NA		
Vinyl Acetate	UNFI	10.000	ug/L	C	U		NA				NA		
Vinyl chloride	UNFI	10.000	ug/L	C	U		NA				NA		
Xylenes, Total	UNKN	5.000	ug/L	C	U		NA				NA		
cis-1,3-Dichloropropene	UNFI	5.000	ug/L	C	U		NA				NA		
trans-1,3-Dichloropropene	UNFI	5.000	ug/L	C	U		NA				NA		
Semivolatile Organics													
1,2,4-Trichlorobenzene	UNFI	10.000	ug/L	C	U		NA				NA		

TABLE E-12A
(Continued)

PHASE I - CHEMICAL PARAMETERS

BORING NUMBER		1016					1016					1016				
SAMPLE NUMBER		003062					003906					004060				
SAMPLING DATE		03/28/88					02/26/89					03/29/89				
CHEMICAL PARAMETERS	FLTD	RESULTS	UNITS	L	VQ		FLTD	RESULTS	UNITS	L	VQ	FLTD	RESULTS	UNITS	L	VQ
Semivolatile Organics																
1,2-Dichlorobenzene	UNKN	10.000	ug/L	C	U			NA					NA			
1,3-Dichlorobenzene	UNFI	10.000	ug/L	C	U			NA					NA			
1,4-Dichlorobenzene	UNFI	10.000	ug/L	C	U			NA					NA			
2,4,5-Trichlorophenol	UNFI	50.000	ug/L	C	U			NA					NA			
2,4,6-Trichlorophenol	UNFI	10.000	ug/L	C	U			NA					NA			
2,4-Dichlorophenol	UNFI	10.000	ug/L	C	U			NA					NA			
2,4-Dimethylphenol	UNFI	10.000	ug/L	C	U			NA					NA			
2,4-Dinitrophenol	UNFI	50.000	ug/L	C	U			NA					NA			
2,4-Dinitrotoluene	UNFI	10.000	ug/L	C	U			NA					NA			
2,6-Dinitrotoluene	UNFI	10.000	ug/L	C	U			NA					NA			
2-Chloronaphthalene	UNKN	10.000	ug/L	C	U			NA					NA			
2-Chlorophenol	UNFI	10.000	ug/L	C	U			NA					NA			
2-Methylnaphthalene	UNFI	10.000	ug/L	C	U			NA					NA			
2-Methylphenol	UNFI	10.000	ug/L	C	U			NA					NA			
2-Nitroaniline	UNKN	50.000	ug/L	C	U			NA					NA			
2-Nitrophenol	UNFI	10.000	ug/L	C	U			NA					NA			
3,3'-Dichlorobenzidine	UNFI	20.000	ug/L	C	U			NA					NA			
3-Nitroaniline	UNFI	50.000	ug/L	C	U			NA					NA			
4,6-Dinitro-2-methylphenol	UNFI	50.000	ug/L	C	U			NA					NA			
4-Bromophenyl phenyl ether	UNKN	10.000	ug/L	C	U			NA					NA			
4-Chloro-3-methylphenol	UNFI	10.000	ug/L	C	U			NA					NA			
4-Chlorophenylphenyl ether	UNKN	10.000	ug/L	C	U			NA					NA			
4-Methylphenol	UNKN	10.000	ug/L	C	U			NA					NA			
4-Nitroaniline	UNFI	50.000	ug/L	C	U			NA					NA			
4-Nitrophenol	UNFI	50.000	ug/L	C	U			NA					NA			
Acenaphthene	UNFI	10.000	ug/L	C	U			NA					NA			
Acenaphthylene	UNFI	10.000	ug/L	C	U			NA					NA			
Anthracene	UNFI	10.000	ug/L	C	U			NA					NA			
Benzo(a)anthracene	UNFI	10.000	ug/L	C	U			NA					NA			
Benzo(a)pyrene	UNFI	10.000	ug/L	C	U			NA					NA			
Benzo(b)fluoranthene	UNKN	10.000	ug/L	C	U			NA					NA			
Benzo(g,h,i)perylene	UNFI	10.000	ug/L	C	U			NA					NA			
Benzo(k)fluoranthene	UNFI	10.000	ug/L	C	U			NA					NA			
Benzoic acid	UNFI	50.000	ug/L	C	U			NA					NA			
Benzyl alcohol	UNKN	10.000	ug/L	C	U			NA					NA			
Butyl benzyl phthalate	UNFI	10.000	ug/L	C	U			NA					NA			
Chrysene	UNKN	10.000	ug/L	C	U			NA					NA			
Di-n-butyl phthalate	UNFI	10.000	ug/L	C	U			NA					NA			
Di-n-octyl phthalate	UNFI	10.000	ug/L	C	U			NA					NA			
Dibenzo(a,h)anthracene	UNFI	10.000	ug/L	C	U			NA					NA			
Dibenzofuran	UNKN	10.000	ug/L	C	U			NA					NA			
Diethyl phthalate	UNFI	10.000	ug/L	C	U			NA					NA			

0224

5174

TABLE E-12A
(Continued)

PHASE I - CHEMICAL PARAMETERS

BORING NUMBER		1016					1016					1016				
SAMPLE NUMBER		003062					003906					004060				
SAMPLING DATE		03/28/88					02/26/89					03/29/89				
CHEMICAL PARAMETERS	FLTD	RESULTS	UNITS	L	VQ		FLTD	RESULTS	UNITS	L	VQ	FLTD	RESULTS	UNITS	L	VQ
Semivolatile Organics																
Dimethyl phthalate	UNFI	10.000	ug/L	C	U			NA					NA			
Fluoranthene	UNFI	10.000	ug/L	C	U			NA					NA			
Fluorene	UNFI	10.000	ug/L	C	U			NA					NA			
Hexachlorobenzene	UNFI	10.000	ug/L	C	U			NA					NA			
Hexachlorobutadiene	UNFI	10.000	ug/L	C	U			NA					NA			
Hexachlorocyclopentadiene	UNFI	10.000	ug/L	C	U			NA					NA			
Hexachloroethane	UNKN	10.000	ug/L	C	U			NA					NA			
Indeno(1,2,3-cd)pyrene	UNFI	10.000	ug/L	C	U			NA					NA			
Isophorone	UNFI	10.000	ug/L	C	U			NA					NA			
Methyl parathion		NA						NA				UNFI	0.200	ug/L	C	U
N-Nitroso-di-n-propylamine	UNFI	10.000	ug/L	C	U			NA					NA			
N-Nitrosodiphenylamine	UNFI	10.000	ug/L	C	U			NA					NA			
Naphthalene	UNFI	10.000	ug/L	C	U			NA					NA			
Nitrobenzene	UNFI	10.000	ug/L	C	U			NA					NA			
Parathion		NA						NA				UNFI	0.200	ug/L	C	U
Pentachlorophenol	UNKN	50.000	ug/L	C	U			NA					NA			
Phenanthrene	UNFI	10.000	ug/L	C	U			NA					NA			
Phenol	UNFI	10.000	ug/L	C	U			NA					NA			
Pyrene	UNFI	10.000	ug/L	C	U			NA					NA			
bis(2-Chloroethoxy)methane	UNFI	10.000	ug/L	C	U			NA					NA			
bis(2-Chloroethyl)ether	UNKN	10.000	ug/L	C	U			NA					NA			
bis(2-Chloroisopropyl) ether	UNFI	10.000	ug/L	C	U			NA					NA			
bis(2-Ethylhexyl) phthalate	UNFI	10.000	ug/L	C	U			NA					NA			
p-Chloroaniline	UNFI	10.000	ug/L	C	U			NA					NA			
Pesticide Organics/PCBs																
4,4'-DDD	UNFI	0.100	ug/L	C	U			NA					NA			
4,4'-DDE	UNFI	0.100	ug/L	C	U			NA					NA			
4,4'-DDT	UNFI	0.100	ug/L	C	U			NA					NA			
Aldrin	UNFI	0.050	ug/L	C	U			NA					NA			
Aroclor-1016	UNFI	0.500	ug/L	C	U			NA					NA			
Aroclor-1221	UNFI	0.500	ug/L	C	U			NA					NA			
Aroclor-1232	UNFI	0.500	ug/L	C	U			NA					NA			
Aroclor-1242	UNKN	0.500	ug/L	C	U			NA					NA			
Aroclor-1248	UNFI	0.500	ug/L	C	U			NA					NA			
Aroclor-1254	UNFI	1.000	ug/L	C	U			NA					NA			
Aroclor-1260	UNFI	1.000	ug/L	C	U			NA					NA			
Azinphosmethyl		NA						NA				UNFI	0.500	ug/L	C	U
Demeton		NA						NA				UNFI	0.400	ug/L	C	U
Diazinon		NA						NA				UNFI	0.200	ug/L	C	U
Dieldrin	UNFI	0.100	ug/L	C	U			NA					NA			

TABLE E-12A
(Continued)

PHASE I - CHEMICAL PARAMETERS

BORING NUMBER		1016				1016				1016			
SAMPLE NUMBER		003062				003906				004060			
SAMPLING DATE		03/28/88				02/26/89				03/29/89			
CHEMICAL PARAMETERS	FLTD	RESULTS	UNITS	L	VQ	FLTD	RESULTS	UNITS	L	VQ	FLTD	RESULTS	UNITS	L	VQ
Pesticide Organics/PCBs															
Disulfoton		NA					NA				UNFI	0.200	ug/L	C	U
Endosulfan II	UNFI	0.100	ug/L	C	U		NA					NA			
Endosulfan sulfate	UNFI	0.100	ug/L	C	U		NA					NA			
Endosulfan-I	UNFI	0.050	ug/L	C	U		NA					NA			
Endrin	UNKN	0.100	ug/L	C	U		NA					NA			
Endrin ketone	UNFI	0.100	ug/L	C	U		NA					NA			
Ethion		NA					NA				UNFI	0.200	ug/L	C	U
Heptachlor	UNFI	0.050	ug/L	C	U		NA					NA			
Heptachlor epoxide	UNFI	0.050	ug/L	C	U		NA					NA			
Malathion		NA					NA				UNFI	0.200	ug/L	C	U
Methoxychlor	UNFI	0.500	ug/L	C	U		NA					NA			
Toxaphene	UNFI	1.000	ug/L	C	U		NA					NA			
alpha-BHC	UNFI	0.050	ug/L	C	U		NA					NA			
alpha-Chlordane	UNFI	0.500	ug/L	C	U		NA					NA			
beta-BHC	UNFI	0.050	ug/L	C	U		NA					NA			
delta-BHC	UNKN	0.050	ug/L	C	U		NA					NA			
gamma-BHC (Lindane)	UNFI	0.050	ug/L	C	U		NA					NA			
gamma-Chlordane	UNFI	0.500	ug/L	C	U		NA					NA			
General Chemistry															
Ammonia	UNFI	0.100	mg/L	C	U	UNFI	0.300	mg/L	C	U		NA			
Chloride	UNFI	6.800	mg/L	C	-	UNFI	5.700	mg/L	C	U		NA			
Fluoride		NA				UNFI	0.100	mg/L	C	-		NA			
Fluoride	UNKN	0.900	mg/L	C	-		NA					NA			
Hexavalent Chromium	UNFI	0.020	mg/L	C	U		NA					NA			
Nitrate	UNFI	5.000	mg/L	C	U	UNFI	1.800	mg/L	C	-		NA			
Phenols	UNFI	0.010	mg/L	C	U	UNFI	0.005	mg/L	C	-		NA			
Phosphate	UNFI	0.300	mg/L	C	-		NA					NA			
Phosphorus		NA				UNFI	0.040	mg/L	C	-		NA			
Specific conductivity	UNFI	1040.000	umhos	C	-		NA					NA			
Sulfate		NA				UNFI	26.000	mg/L	C	-		NA			
Sulfate	UNKN	28.000	mg/L	C	-		NA					NA			
Total Kjeldahl Nitrogen		NA				UNFI	1.200	mg/L	C	-		NA			
Total Organic Halides		NA				UNFI	0.070	mg/L	C	-		NA			
Total Organic Nitrogen	UNFI	0.200	mg/L	C	U	UNFI	0.900	mg/L	C	-		NA			
pH	UNFI	6.800	stand	C	-		NA					NA			

TABLE E-12A
(Continued)

PHASE I - CHEMICAL PARAMETERS

BORING NUMBER		1047					1047					1711				
SAMPLE NUMBER		003102					003855					047005				
SAMPLING DATE		04/20/88					01/22/89					06/11/92				
CHEMICAL PARAMETERS	FLTD	RESULTS	UNITS	L	VQ		FLTD	RESULTS	UNITS	L	VQ	FLTD	RESULTS	UNITS	L	VQ
Inorganics																
Aluminum		NA						NA				FILT	0.052	mg/L	D	-
Antimony		NA						NA				FILT	0.030	mg/L	D	UJ
Arsenic	FILT	0.200	mg/L	C	U		FILT	0.002	mg/L	C	U	FILT	0.050	mg/L	D	UJ
Barium	FILT	0.048	mg/L	C	-		FILT	0.054	mg/L	C	-	FILT	0.154	mg/L	D	-
Beryllium		NA						NA				FILT	0.002	mg/L	D	U
Cadmium	FILT	0.005	mg/L	C	U		FILT	0.009	mg/L	C	-	FILT	0.005	mg/L	D	UJ
Calcium	FILT	103.000	mg/L	C	-		FILT	111.000	mg/L	C	-	FILT	233.000	mg/L	D	-
Chromium	FILT	0.020	mg/L	C	U		FILT	0.024	mg/L	C	-	FILT	0.010	mg/L	D	U
Cobalt		NA						NA				FILT	0.027	mg/L	D	-
Copper	FILT	0.010	mg/L	C	U		FILT	0.011	mg/L	C	-	FILT	0.010	mg/L	D	U
Iron	FILT	0.066	mg/L	C	-		FILT	0.125	mg/L	C	U	FILT	11.300	mg/L	D	-
Lead	FILT	0.050	mg/L	C	UJ		FILT	0.002	mg/L	C	UJ	FILT	0.040	mg/L	D	UJ
Magnesium	FILT	50.800	mg/L	C	-		FILT	53.800	mg/L	C	-	FILT	49.400	mg/L	D	-
Manganese	FILT	0.035	mg/L	C	-		FILT	0.019	mg/L	C	-	FILT	3.760	mg/L	D	-
Mercury	FILT	0.000	mg/L	C	U		FILT	0.000	mg/L	C	U	FILT	0.000	mg/L	D	U
Molybdenum	FILT	0.020	mg/L	C	U		FILT	0.020	mg/L	C	U	FILT	0.088	mg/L	D	-
Nickel	FILT	0.020	mg/L	C	U		FILT	0.025	mg/L	C	-	FILT	2.430	mg/L	D	-
Potassium	FILT	2.730	mg/L	C	J		FILT	2.340	mg/L	C	-	FILT	34.000	mg/L	D	-
Selenium	FILT	0.200	mg/L	C	U		FILT	0.002	mg/L	C	U	FILT	0.080	mg/L	D	UJ
Silicon		NA						NA				FILT	19.200	mg/L	D	-
Silver	FILT	0.012	mg/L	C	J		FILT	0.001	mg/L	C	U	FILT	0.010	mg/L	D	UJ
Sodium	FILT	22.300	mg/L	C	-		FILT	29.200	mg/L	D	-	FILT	59.500	mg/L	D	-
Thallium		NA						NA				FILT	0.422	mg/L	D	J
Vanadium		NA						NA				FILT	0.010	mg/L	D	U
Zinc		NA						NA				FILT	0.012	mg/L	D	-
General Chemistry																
Ammonia		NA					UNFI	0.100	mg/L	C	U		NA			
Chloride		NA					UNFI	1.500	mg/L	C	U		NA			
Fluoride		NA					UNFI	0.800	mg/L	C	-		NA			
Nitrate		NA					UNFI	0.050	mg/L	C	R		NA			
Phenols		NA					UNFI	0.010	mg/L	C	U		NA			
Phosphorus		NA					UNFI	0.400	mg/L	C	-		NA			
Sulfate		NA					UNFI	180.000	mg/L	C	-		NA			
Total Kjeldahl Nitrogen		NA					UNFI	0.200	mg/L	C	-		NA			
Total Organic Halides		NA					UNFI	0.010	mg/L	C	U		NA			
Total Organic Nitrogen		NA					UNFI	0.200	mg/L	C	-		NA			

TABLE E-12A
(Continued)

PHASE I - CHEMICAL PARAMETERS

BORING NUMBER		1711						2016				
SAMPLE NUMBER		047009						003063				
SAMPLING DATE		06/19/92						03/28/88				
CHEMICAL PARAMETERS	FLTD	RESULTS	UNITS	L	VQ		FLTD	RESULTS	UNITS	L	VQ	
Inorganics												
Aluminum		NA					FILT	0.040	mg/L	C	U	
Aluminum	UNKN	0.030	mg/L	C	U			NA				
Antimony		NA					FILT	0.030	mg/L	C	U	
Antimony	UNKN	0.030	mg/L	C	UJ			NA				
Arsenic	UNKN	0.050	mg/L	C	UJ		UNKN	0.002	mg/L	C	U	
Barium	UNKN	0.133	mg/L	C	-		UNKN	0.045	mg/L	C	-	
Beryllium		NA					FILT	0.001	mg/L	C	U	
Beryllium	UNKN	0.002	mg/L	C	U			NA				
Cadmium	UNKN	0.005	mg/L	C	U		UNKN	0.005	mg/L	C	U	
Calcium	UNKN	213.000	mg/L	C	-		UNKN	92.700	mg/L	C	-	
Chromium	UNKN	0.010	mg/L	C	U		UNKN	0.010	mg/L	C	U	
Cobalt		NA					FILT	0.020	mg/L	C	U	
Cobalt	UNKN	0.073	mg/L	C	-			NA				
Copper	UNKN	0.010	mg/L	C	U		UNKN	0.010	mg/L	C	U	
Cyanide		NA					UNKN	0.010	mg/L	C	U	
Iron	UNKN	25.500	mg/L	C	-		UNKN	0.156	mg/L	C	-	
Lead	UNKN	0.040	mg/L	C	UJ		UNKN	0.030	mg/L	C	U	
Magnesium	UNKN	44.300	mg/L	C	-		UNKN	21.200	mg/L	C	-	
Manganese	UNKN	3.850	mg/L	C	-		UNKN	0.024	mg/L	C	-	
Mercury	UNKN	0.000	mg/L	C	U		UNKN	0.000	mg/L	C	U	
Molybdenum		NA					FILT	0.010	mg/L	C	U	
Molybdenum	UNKN	0.147	mg/L	C	-			NA				
Nickel	UNKN	1.020	mg/L	C	-		UNKN	0.020	mg/L	C	U	
Potassium	UNKN	23.100	mg/L	C	-		UNKN	2.000	mg/L	C	-	
Selenium	UNKN	0.080	mg/L	C	UJ		UNKN	0.002	mg/L	C	U	
Silicon	UNKN	20.100	mg/L	C	-			NA				
Silver	UNKN	0.010	mg/L	C	UJ		UNKN	0.005	mg/L	C	U	
Sodium	UNKN	39.100	mg/L	C	-		UNKN	13.800	mg/L	C	-	
Thallium		NA					FILT	0.004	mg/L	C	U	
Thallium	UNKN	0.435	mg/L	C	J			NA				
Vanadium		NA					FILT	0.010	mg/L	C	U	
Vanadium	UNKN	0.010	mg/L	C	U			NA				
Zinc		NA					FILT	0.034	mg/L	C	-	
Zinc	UNKN	0.014	mg/L	C	-			NA				
Volatile Organics												
1,1,1-Trichloroethane		NA					UNFI	5.000	ug/L	C	U	
1,1,2,2-Tetrachloroethane		NA					UNFI	5.000	ug/L	C	U	
1,1,2-Trichloroethane		NA					UNFI	5.000	ug/L	C	U	
1,1-Dichloroethane		NA					UNFI	5.000	ug/L	C	U	
1,1-Dichloroethene		NA					UNFI	5.000	ug/L	C	U	

TABLE E-12A
(Continued)

PHASE I - CHEMICAL PARAMETERS

BORING NUMBER		1711				2016			
SAMPLE NUMBER		047009				003063			
SAMPLING DATE		06/19/92				03/28/88			
CHEMICAL PARAMETERS	FLTD	RESULTS	UNITS	L	VQ	FLTD	RESULTS	UNITS	L	VQ
Volatile Organics										
1,2-Dichloroethane		NA				UNFI	5.000	ug/L	C	U
1,2-Dichloroethene		NA				UNFI	5.000	ug/L	C	U
1,2-Dichloropropane		NA				UNFI	5.000	ug/L	C	U
2-Butanone		NA				UNKN	10.000	ug/L	C	U
2-Hexanone		NA				UNFI	10.000	ug/L	C	U
4-Methyl-2-pentanone		NA				UNFI	10.000	ug/L	C	U
Acetone		NA				UNFI	10.000	ug/L	C	U
Benzene		NA				UNFI	5.000	ug/L	C	U
Bromodichloromethane		NA				UNFI	5.000	ug/L	C	U
Bromoform		NA				UNFI	5.000	ug/L	C	U
Bromomethane		NA				UNKN	10.000	ug/L	C	U
Carbon Tetrachloride		NA				UNFI	5.000	ug/L	C	U
Carbon disulfide		NA				UNFI	5.000	ug/L	C	U
Chlorobenzene		NA				UNKN	5.000	ug/L	C	U
Chloroethane		NA				UNFI	10.000	ug/L	C	U
Chloroform		NA				UNFI	5.000	ug/L	C	U
Chloromethane		NA				UNFI	10.000	ug/L	C	U
Dibromochloromethane		NA				UNFI	5.000	ug/L	C	U
Ethylbenzene		NA				UNFI	5.000	ug/L	C	U
Methylene chloride		NA				UNFI	5.000	ug/L	C	U
Styrene		NA				UNFI	5.000	ug/L	C	U
Tetrachloroethene		NA				UNFI	5.000	ug/L	C	U
Toluene		NA				UNFI	5.000	ug/L	C	U
Trichloroethene		NA				UNFI	5.000	ug/L	C	U
Vinyl Acetate		NA				UNFI	10.000	ug/L	C	U
Vinyl chloride		NA				UNKN	10.000	ug/L	C	U
Xylenes, Total		NA				UNFI	5.000	ug/L	C	U
cis-1,3-Dichloropropene		NA				UNFI	5.000	ug/L	C	U
trans-1,3-Dichloropropene		NA				UNFI	5.000	ug/L	C	U
Semivolatile Organics										
1,2,4-Trichlorobenzene		NA				UNFI	10.000	ug/L	C	U
1,2-Dichlorobenzene		NA				UNKN	10.000	ug/L	C	U
1,3-Dichlorobenzene		NA				UNFI	10.000	ug/L	C	U
1,4-Dichlorobenzene		NA				UNFI	10.000	ug/L	C	U
2,4,5-Trichlorophenol		NA				UNKN	50.000	ug/L	C	U
2,4,6-Trichlorophenol		NA				UNFI	10.000	ug/L	C	U
2,4-Dichlorophenol		NA				UNFI	10.000	ug/L	C	U
2,4-Dimethylphenol		NA				UNFI	10.000	ug/L	C	U
2,4-Dinitrophenol		NA				UNFI	50.000	ug/L	C	U
2,4-Dinitrotoluene		NA				UNFI	10.000	ug/L	C	U

TABLE E-12A
(Continued)

PHASE I - CHEMICAL PARAMETERS

BORING NUMBER		1711				2016			
SAMPLE NUMBER		047009				003063			
SAMPLING DATE		06/19/92				03/28/88			
CHEMICAL PARAMETERS	FLTD	RESULTS	UNITS	L	VQ	FLTD	RESULTS	UNITS	L	VQ
Semivolatile Organics										
2,6-Dinitrotoluene		NA				UNFI	10.000	ug/L	C	U
2-Chloro-N-(2,6-diethylphenyl)-N-(methoxy		NA					NA			
2-Chloronaphthalene		NA				UNKN	10.000	ug/L	C	U
2-Chlorophenol		NA				UNFI	10.000	ug/L	C	U
2-Methylnaphthalene		NA				UNFI	10.000	ug/L	C	U
2-Methylphenol		NA				UNFI	10.000	ug/L	C	U
2-Nitroaniline		NA				UNKN	50.000	ug/L	C	U
2-Nitrophenol		NA				UNFI	10.000	ug/L	C	U
3,3'-Dichlorobenzidine		NA				UNFI	20.000	ug/L	C	U
3-Nitroaniline		NA				UNFI	50.000	ug/L	C	U
4,6-Dinitro-2-methylphenol		NA				UNFI	50.000	ug/L	C	U
4-Bromophenyl phenyl ether		NA				UNFI	10.000	ug/L	C	U
4-Chloro-3-methylphenol		NA				UNFI	10.000	ug/L	C	U
4-Chlorophenylphenyl ether		NA				UNKN	10.000	ug/L	C	U
4-Methylphenol		NA				UNFI	10.000	ug/L	C	U
4-Nitroaniline		NA				UNFI	50.000	ug/L	C	U
4-Nitrophenol		NA				UNFI	50.000	ug/L	C	U
6-Chloro-N,N'-diethyl-1,3,5-triazine-2,4-		NA					NA			
Acenaphthene		NA				UNFI	10.000	ug/L	C	U
Acenaphthylene		NA				UNFI	10.000	ug/L	C	U
Anthracene		NA				UNFI	10.000	ug/L	C	U
Benzo(a)anthracene		NA				UNFI	10.000	ug/L	C	U
Benzo(a)pyrene		NA				UNFI	10.000	ug/L	C	U
Benzo(b)fluoranthene		NA				UNFI	10.000	ug/L	C	U
Benzo(g,h,i)perylene		NA				UNKN	10.000	ug/L	C	U
Benzo(k)fluoranthene		NA				UNFI	10.000	ug/L	C	U
Benzoic acid		NA				UNFI	50.000	ug/L	C	U
Benzyl alcohol		NA				UNFI	10.000	ug/L	C	U
Butyl benzyl phthalate		NA				UNFI	10.000	ug/L	C	U
Chrysene		NA				UNFI	10.000	ug/L	C	U
Di-n-butyl phthalate		NA				UNFI	10.000	ug/L	C	U
Di-n-octyl phthalate		NA				UNFI	10.000	ug/L	C	U
Dibenzo(a,h)anthracene		NA				UNKN	10.000	ug/L	C	U
Dibenzofuran		NA				UNFI	10.000	ug/L	C	U
Diethyl phthalate		NA				UNFI	10.000	ug/L	C	U
Dimethyl phthalate		NA				UNFI	10.000	ug/L	C	U
Fluoranthene		NA				UNKN	10.000	ug/L	C	U
Fluorene		NA				UNFI	10.000	ug/L	C	U
Hexachlorobenzene		NA				UNFI	10.000	ug/L	C	U
Hexachlorobutadiene		NA				UNFI	10.000	ug/L	C	U
Hexachlorocyclopentadiene		NA				UNFI	10.000	ug/L	C	U
Hexachloroethane		NA				UNFI	10.000	ug/L	C	U

1230
5174

TABLE E-12A
(Continued)

PHASE I - CHEMICAL PARAMETERS

BORING NUMBER		1711				2016			
SAMPLE NUMBER		047009				003063			
SAMPLING DATE		06/19/92				03/28/88			
CHEMICAL PARAMETERS	FLTD	RESULTS	UNITS	L	VQ	FLTD	RESULTS	UNITS	L VQ
Semivolatile Organics									
Indeno(1,2,3-cd)pyrene		NA				UNFI	10.000	ug/L	C U
Isophorone		NA				UNFI	10.000	ug/L	C U
N-Nitroso-di-n-propylamine		NA				UNFI	10.000	ug/L	C U
N-Nitrosodiphenylamine		NA				UNFI	10.000	ug/L	C U
Naphthalene		NA				UNFI	10.000	ug/L	C U
Nitrobenzene		NA				UNFI	10.000	ug/L	C U
Pentachlorophenol		NA				UNFI	50.000	ug/L	C U
Phenanthrene		NA				UNFI	10.000	ug/L	C U
Phenol		NA				UNFI	10.000	ug/L	C U
Pyrene		NA				UNFI	10.000	ug/L	C U
bis(2-Chloroethoxy)methane		NA				UNFI	10.000	ug/L	C U
bis(2-Chloroethyl)ether		NA				UNFI	10.000	ug/L	C U
bis(2-Chloroisopropyl) ether		NA				UNFI	10.000	ug/L	C U
bis(2-Ethylhexyl) phthalate		NA				UNFI	4.000	ug/L	C J
p-Chloroaniline		NA				UNFI	10.000	ug/L	C U
Herbicide Organics									
2,4,5-TP (Silvex)		NA					NA		
2,4-D		NA					NA		
Atrazine		NA					NA		
Cyanazine		NA					NA		
Linuron		NA					NA		
Metribuzin		NA					NA		
Pesticide Organics/PCBs									
4,4'-DDD		NA				UNFI	0.100	ug/L	C U
4,4'-DDE		NA				UNFI	0.100	ug/L	C U
4,4'-DDT		NA				UNKN	0.100	ug/L	C U
Aldrin		NA				UNFI	0.050	ug/L	C U
Aroclor-1016		NA				UNFI	0.500	ug/L	C U
Aroclor-1221		NA				UNFI	0.500	ug/L	C U
Aroclor-1232		NA				UNKN	0.500	ug/L	C U
Aroclor-1242		NA				UNFI	0.500	ug/L	C U
Aroclor-1248		NA				UNFI	0.500	ug/L	C U
Aroclor-1254		NA				UNFI	1.000	ug/L	C U
Aroclor-1260		NA				UNFI	1.000	ug/L	C U
Dieldrin		NA				UNFI	0.100	ug/L	C U
Endosulfan II		NA				UNFI	0.100	ug/L	C U
Endosulfan sulfate		NA				UNFI	0.100	ug/L	C U
Endosulfan-I		NA				UNFI	0.050	ug/L	C U

TABLE E-12A
(Continued)

PHASE I - CHEMICAL PARAMETERS

BORING NUMBER		1711						2016			
SAMPLE NUMBER		047009						003063			
SAMPLING DATE		06/19/92						03/28/88			
CHEMICAL PARAMETERS	FLTD	RESULTS	UNITS	L	VQ		FLTD	RESULTS	UNITS	L	VQ
Pesticide Organics/PCBs											
Endrin		NA						NA			
Endrin		NA					UNKN	0.100	ug/L	C	U
Endrin ketone		NA					UNFI	0.100	ug/L	C	U
Fonofos		NA						NA			
Heptachlor		NA					UNFI	0.050	ug/L	C	U
Heptachlor epoxide		NA					UNKN	0.050	ug/L	C	U
Methoxychlor		NA						NA			
Methoxychlor		NA					UNKN	0.500	ug/L	C	U
Metolachlor		NA						NA			
Phosphorodithioic acid, O,O-diethyl-S-(((		NA						NA			
Toxaphene		NA					UNFI	1.000	ug/L	C	U
alpha-BHC		NA					UNFI	0.050	ug/L	C	U
alpha-Chlordane		NA					UNFI	0.500	ug/L	C	U
beta-BHC		NA					UNKN	0.050	ug/L	C	U
delta-BHC		NA					UNFI	0.050	ug/L	C	U
gamma-BHC (Lindane)		NA					UNFI	0.050	ug/L	C	U
gamma-Chlordane		NA					UNKN	0.500	ug/L	C	U
Dioxin Furan											
Carbofuran		NA						NA			
General Chemistry											
Ammonia		NA					UNFI	0.100	mg/L	C	U
Chemical Oxygen Demand		NA						NA			
Chloride		NA					UNFI	23.000	mg/L	C	-
Fluoride		NA					UNFI	0.500	mg/L	C	U
Hexavalent Chromium		NA					UNFI	0.020	mg/L	C	U
Nitrate		NA					UNFI	5.000	mg/L	C	U
Phenols		NA					UNFI	0.010	mg/L	C	U
Phosphate		NA					UNFI	0.280	mg/L	C	-
Phosphorus		NA						NA			
Specific conductivity		NA					UNFI	650.000	umhos	C	-
Sulfate		NA					UNFI	59.000	mg/L	C	-
Total Dissolved Solids		NA						NA			
Total Organic Carbon		NA						NA			
Total Organic Halides		NA						NA			
Total Organic Nitrogen		NA					UNFI	0.300	mg/L	C	U
pH		NA					UNFI	7.580	stand	C	-

5174

TABLE E-12A
(Continued)

PHASE 1 - CHEMICAL PARAMETERS

BORING NUMBER		2016				2016				2016			
SAMPLE NUMBER		003434				003551				003685			
SAMPLING DATE		08/03/88				02/07/89				11/04/88			
CHEMICAL PARAMETERS	FLTD	RESULTS	UNITS	L	VQ	FLTD	RESULTS	UNITS	L VQ	FLTD	RESULTS	UNITS	L VQ
Inorganics													
Arsenic	*F	0.010	mg/L	C	U		NA				NA		
Arsenic		NA					NA			FILT	0.002	mg/L	C U
Barium	*F	0.200	mg/L	C	U		NA				NA		
Barium		NA					NA			FILT	0.030	mg/L	C -
Cadmium	*F	0.005	mg/L	C	U		NA				NA		
Cadmium		NA					NA			FILT	0.002	mg/L	C U
Calcium	*F	92.000	mg/L	C	J		NA				NA		
Calcium		NA					NA			FILT	82.700	mg/L	C -
Chromium	*F	0.010	mg/L	C	U		NA				NA		
Chromium		NA					NA			FILT	0.020	mg/L	C U
Copper	*F	0.030	mg/L	C	U		NA				NA		
Copper		NA					NA			FILT	0.015	mg/L	C -
Iron	*F	0.100	mg/L	C	U		NA				NA		
Iron		NA					NA			FILT	0.020	mg/L	C -
Lead	*F	0.005	mg/L	C	U		NA				NA		
Lead		NA					NA			FILT	0.004	mg/L	C UJ
Magnesium	*F	24.000	mg/L	C	J		NA				NA		
Magnesium		NA					NA			FILT	20.500	mg/L	C -
Manganese	*F	0.020	mg/L	C	U		NA				NA		
Manganese		NA					NA			FILT	0.002	mg/L	C -
Mercury	*F	0.000	mg/L	C	U		NA				NA		
Mercury		NA					NA			FILT	0.000	mg/L	C U
Molybdenum	*F	0.050	mg/L	C	U		NA				NA		
Molybdenum		NA					NA			FILT	0.020	mg/L	C U
Nickel	*F	0.040	mg/L	C	U		NA				NA		
Nickel		NA					NA			FILT	0.020	mg/L	C U
Potassium	*F	5.000	mg/L	C	UJ		NA				NA		
Potassium		NA					NA			FILT	2.620	mg/L	C J
Selenium	*F	0.005	mg/L	C	U		NA				NA		
Selenium		NA					NA			FILT	0.002	mg/L	C UJ
Silver	*F	0.010	mg/L	C	U		NA				NA		
Silver		NA					NA			FILT	0.010	mg/L	C U
Sodium	*F	12.000	mg/L	C	J		NA				NA		
Sodium		NA					NA			FILT	12.200	mg/L	C -
Semivolatile Organics													
Methyl parathion		NA				UNFI	0.250	ug/L	C U		NA		
Parathion		NA				UNFI	0.250	ug/L	C U		NA		
Pesticide Organics/PCBs													
Azinphosmethyl		NA				UNFI	2.500	ug/L	C U		NA		

TABLE E-12A
(Continued)

PHASE I - CHEMICAL PARAMETERS

BORING NUMBER		2016				2016				2016			
SAMPLE NUMBER		003434				003551				003685			
SAMPLING DATE		08/03/88				02/07/89				11/04/88			
CHEMICAL PARAMETERS	FLTD	RESULTS	UNITS	L	VQ	FLTD	RESULTS	UNITS	L	VQ	FLTD	RESULTS	UNITS	L	VQ
Pesticide Organics/PCBs															
Demeton		NA				UNFI	0.250	ug/L	C	U		NA			
Diazinon		NA				UNFI	0.250	ug/L	C	U		NA			
Disulfoton		NA				UNFI	0.250	ug/L	C	U		NA			
Ethion		NA				UNFI	0.250	ug/L	C	U		NA			
Malathion		NA				UNFI	0.250	ug/L	C	U		NA			
General Chemistry															
Ammonia	UNFI	0.100	mg/L	C	UJ		NA				UNFI	0.100	mg/L	C	U
Chloride	UNFI	23.000	mg/L	C	J		NA				UNFI	21.500	mg/L	C	-
Fluoride	UNFI	0.770	mg/L	C	J		NA				UNFI	0.160	mg/L	C	J
Nitrate	UNFI	5.300	mg/L	C	J		NA				UNFI	2.440	mg/L	C	J
Phenols	UNFI	0.050	mg/L	C	U		NA				UNFI	0.010	mg/L	C	U
Phosphorus	UNFI	0.030	mg/L	C	J		NA				UNFI	0.034	mg/L	C	-
Sulfate	UNFI	56.000	mg/L	C	J		NA				UNFI	146.000	mg/L	C	-
Total Kjeldahl Nitrogen		NA					NA				UNFI	0.600	mg/L	C	J
Total Organic Halides		NA					NA				UNFI	0.050	mg/L	C	U
Total Organic Nitrogen	UNFI	0.100	mg/L	C	UJ		NA				UNFI	0.600	mg/L	C	-

0234

- 5174

TABLE E-12A
(Continued)

PHASE I - CHEMICAL PARAMETERS

BORING NUMBER	2016					2016					2016				
SAMPLE NUMBER	003883					004152					004213				
SAMPLING DATE	02/07/89					07/26/89					03/04/90				
CHEMICAL PARAMETERS	FLTD	RESULTS	UNITS	L	VQ	FLTD	RESULTS	UNITS	L	VQ	FLTD	RESULTS	UNITS	L	VQ
Inorganics															
Aluminum		NA					NA				FILT	0.279	mg/L	C	-
Aluminum		NA				UNKN	0.374	mg/L	C	-		NA			
Arsenic	FILT	0.002	mg/L	C	U		NA				FILT	0.002	mg/L	C	U
Arsenic		NA				UNKN	0.002	mg/L	C	UJ		NA			
Barium	FILT	0.046	mg/L	C	-		NA				FILT	0.044	mg/L	C	-
Barium		NA				UNKN	0.041	mg/L	C	-		NA			
Cadmium	FILT	0.005	mg/L	C	-		NA				FILT	0.003	mg/L	C	-
Cadmium		NA				UNKN	0.003	mg/L	C	-		NA			
Calcium	FILT	96.300	mg/L	C	-		NA				FILT	88.200	mg/L	C	-
Calcium		NA				UNKN	86.600	mg/L	C	-		NA			
Chromium	FILT	0.026	mg/L	C	-		NA				FILT	0.127	mg/L	C	-
Chromium		NA				UNKN	0.031	mg/L	C	-		NA			
Copper	FILT	0.011	mg/L	C	-		NA				FILT	0.023	mg/L	C	-
Copper		NA				UNKN	0.011	mg/L	C	-		NA			
Iron	FILT	0.085	mg/L	C	-		NA				FILT	0.143	mg/L	C	-
Iron		NA				UNKN	0.192	mg/L	C	-		NA			
Lead	FILT	0.002	mg/L	C	-		NA				FILT	0.002	mg/L	C	-
Lead		NA				UNKN	0.003	mg/L	C	-		NA			
Magnesium	FILT	25.900	mg/L	C	-		NA				FILT	23.400	mg/L	C	-
Magnesium		NA				UNKN	22.000	mg/L	C	-		NA			
Manganese	FILT	0.006	mg/L	C	-		NA				FILT	0.014	mg/L	C	-
Manganese		NA				UNKN	0.012	mg/L	C	-		NA			
Mercury	FILT	0.001	mg/L	C	J		NA				FILT	0.002	mg/L	C	U
Mercury		NA				UNKN	0.000	mg/L	C	-		NA			
Molybdenum	FILT	0.020	mg/L	C	U		NA				FILT	0.100	mg/L	C	U
Molybdenum		NA				UNKN	0.010	mg/L	C	U		NA			
Nickel	FILT	0.020	mg/L	C	U		NA				FILT	0.020	mg/L	C	U
Nickel		NA				UNKN	0.020	mg/L	C	U		NA			
Potassium	FILT	2.490	mg/L	C	-		NA				FILT	2.360	mg/L	C	-
Potassium		NA				UNKN	2.280	mg/L	C	-		NA			
Selenium	FILT	0.002	mg/L	C	U		NA				FILT	0.002	mg/L	C	UJ
Selenium		NA				UNKN	0.002	mg/L	C	U		NA			
Silicon		NA					NA				FILT	3.140	mg/L	C	J
Silicon		NA				UNKN	3.550	mg/L	C	-		NA			
Silver	FILT	0.001	mg/L	C	U		NA				FILT	0.010	mg/L	C	U
Silver		NA				UNKN	0.010	mg/L	C	U		NA			
Sodium	FILT	10.800	mg/L	C	-		NA				FILT	11.700	mg/L	C	-
Sodium		NA				UNKN	11.200	mg/L	C	-		NA			
Vanadium		NA					NA				FILT	0.015	mg/L	C	-
Vanadium		NA				UNKN	0.013	mg/L	C	-		NA			
General Chemistry															
Ammonia	UNFI	0.100	mg/L	C	U	UNFI	0.100	mg/L	C	U	UNFI	0.100	mg/L	C	U

TABLE E-12A
(Continued)

PHASE I - CHEMICAL PARAMETERS

BORING NUMBER		2016				2016				2016			
SAMPLE NUMBER		003883				004152				004213			
SAMPLING DATE		02/07/89				07/26/89				03/04/90			
CHEMICAL PARAMETERS	FLTD	RESULTS	UNITS	L	VQ	FLTD	RESULTS	UNITS	L	VQ	FLTD	RESULTS	UNITS	L	VQ
General Chemistry															
Chloride	UNFI	16.500	mg/L	C	-	UNFI	21.200	mg/L	C	-	UNFI	12.000	mg/L	C	-
Fluoride	UNFI	0.210	mg/L	C	J	UNFI	0.220	mg/L	C	-	UNFI	0.200	mg/L	C	-
Nitrate	UNFI	2.240	mg/L	C	J	UNFI	2.650	mg/L	C	J	UNFI	2.520	mg/L	C	J
Phenols	UNFI	0.010	mg/L	C	R	UNFI	0.010	mg/L	C	U	UNFI	0.010	mg/L	C	U
Phosphorus	UNFI	0.080	mg/L	C	-	UNFI	0.211	mg/L	C	-	UNFI	0.060	mg/L	C	-
Sulfate	UNFI	51.200	mg/L	C	J	UNFI	51.700	mg/L	C	-	UNFI	58.500	mg/L	C	J
Sulfide		NA				UNFI	0.500	mg/L	C	UJ	UNFI	0.500	mg/L	C	R
Total Kjeldahl Nitrogen	UNFI	0.181	mg/L	C	J	UNFI	0.459	mg/L	C	U	UNFI	0.100	mg/L	C	U
Total Organic Carbon		NA				UNFI	3.710	mg/L	C	-	UNFI	1.650	mg/L	C	-
Total Organic Halides	UNFI	0.050	mg/L	C	U	UNFI	0.010	mg/L	C	UJ	UNFI	0.010	mg/L	C	U
Total Organic Nitrogen	UNFI	0.181	mg/L	C	J	UNFI	0.623	mg/L	C	-	UNFI	0.100	mg/L	C	U

0236

5174

TABLE E-12A
(Continued)

PHASE I - CHEMICAL PARAMETERS

BORING NUMBER		2047				2047				2047			
SAMPLE NUMBER		003998				004093				004160			
SAMPLING DATE		01/22/89				05/02/89				07/28/89			
CHEMICAL PARAMETERS	FLTD	RESULTS	UNITS	L	VQ	FLTD	RESULTS	UNITS	L	VQ	FLTD	RESULTS	UNITS	L	VQ
Inorganics															
Aluminum		NA				FILT	0.115	mg/L	C	-	FILT	0.113	mg/L	C	-
Arsenic	FILT	0.002	mg/L	C	U	FILT	0.002	mg/L	C	U	FILT	0.002	mg/L	C	UJ
Barium	FILT	0.042	mg/L	C	-	FILT	0.047	mg/L	C	-	FILT	0.048	mg/L	C	-
Cadmium	FILT	0.004	mg/L	C	-	FILT	0.004	mg/L	C	-	FILT	0.005	mg/L	C	-
Calcium	FILT	86.000	mg/L	C	-	FILT	89.600	mg/L	C	-	FILT	99.000	mg/L	C	-
Chromium	FILT	0.022	mg/L	C	-	FILT	0.014	mg/L	C	-	FILT	0.033	mg/L	C	-
Copper	FILT	0.013	mg/L	C	-	FILT	0.010	mg/L	C	-	FILT	0.010	mg/L	C	U
Iron	FILT	0.061	mg/L	C	-	FILT	0.053	mg/L	C	-	FILT	0.031	mg/L	C	-
Lead	FILT	0.002	mg/L	C	UJ	FILT	0.002	mg/L	C	UJ	FILT	0.005	mg/L	C	-
Magnesium	FILT	24.500	mg/L	C	-	FILT	27.000	mg/L	C	-	FILT	28.500	mg/L	C	-
Manganese	FILT	0.015	mg/L	C	-	FILT	0.012	mg/L	C	-	FILT	0.010	mg/L	C	-
Mercury	FILT	0.000	mg/L	C	U	FILT	0.200	mg/L	C	UJ	FILT	0.000	mg/L	C	U
Molybdenum	FILT	0.020	mg/L	C	U	FILT	0.010	mg/L	C	U	FILT	0.010	mg/L	C	U
Nickel	FILT	0.020	mg/L	C	U	FILT	0.020	mg/L	C	U	FILT	0.020	mg/L	C	U
Potassium	FILT	2.530	mg/L	C	-	FILT	2.200	mg/L	C	-	FILT	2.050	mg/L	C	-
Selenium	FILT	0.002	mg/L	C	U	FILT	0.002	mg/L	C	UJ	FILT	0.002	mg/L	C	U
Silicon		NA				FILT	3.790	mg/L	C	-	FILT	4.010	mg/L	C	-
Silver	FILT	0.001	mg/L	C	U	FILT	0.001	mg/L	C	U	FILT	0.010	mg/L	C	U
Sodium	FILT	10.500	mg/L	C	-	FILT	10.310	mg/L	C	-	FILT	11.100	mg/L	C	-
Vanadium		NA				FILT	0.012	mg/L	C	-	FILT	0.014	mg/L	C	-
General Chemistry															
Ammonia	UNFI	0.100	mg/L	C	U	UNFI	0.100	mg/L	C	U	UNFI	0.100	mg/L	C	U
Chloride	UNFI	30.000	mg/L	C	-	UNFI	25.500	mg/L	C	-	UNFI	23.500	mg/L	C	-
Fluoride	UNFI	0.200	mg/L	C	-	UNFI	0.165	mg/L	C	-	UNFI	0.210	mg/L	C	-
Nitrate	UNFI	1.600	mg/L	C	J	UNFI	2.320	mg/L	C	J	UNFI	2.090	mg/L	C	J
Phenols	UNFI	0.010	mg/L	C	U	UNFI	0.055	mg/L	C	-	UNFI	0.010	mg/L	C	U
Phosphorus	UNFI	0.100	mg/L	C	-	UNFI	0.758	mg/L	C	-	UNFI	0.199	mg/L	C	-
Sulfate	UNFI	68.000	mg/L	C	-	UNFI	64.300	mg/L	C	J	UNFI	56.900	mg/L	C	-
Sulfide		NA				UNFI	28.100	mg/L	C	J	UNFI	0.500	mg/L	C	UJ
Total Kjeldahl Nitrogen	UNFI	0.100	mg/L	C	U	UNFI	0.411	mg/L	C	-	UNFI	0.160	mg/L	C	-
Total Organic Carbon		NA				UNFI	1.000	mg/L	C	UJ	UNFI	1.810	mg/L	C	-
Total Organic Halides	UNFI	0.010	mg/L	C	U	UNFI	0.033	mg/L	C	-	UNFI	0.010	mg/L	C	U
Total Organic Nitrogen	UNFI	0.100	mg/L	C	U	UNFI	0.411	mg/L	C	-	UNFI	0.160	mg/L	C	-

TABLE E-12A
(Continued)

PHASE I - CHEMICAL PARAMETERS

BORING NUMBER		2047				2402				2402			
SAMPLE NUMBER		004220				038304				038339			
SAMPLING DATE		04/03/90				01/28/92				04/07/92			
CHEMICAL PARAMETERS	FLTD	RESULTS	UNITS	L	VQ	FLTD	RESULTS	UNITS	L VQ	FLTD	RESULTS	UNITS	L VQ
Inorganics													
Aluminum	FILT	0.132	mg/L	C	-		NA				NA		
Aluminum		NA				UNKN	0.093	mg/L	D R	UNKN	0.027	mg/L	D U
Arsenic	FILT	0.002	mg/L	C	UJ		NA				NA		
Arsenic		NA				UNKN	0.002	mg/L	D U	UNKN	0.001	mg/L	D U
Barium	FILT	0.041	mg/L	C	-		NA				NA		
Barium		NA				UNKN	0.039	mg/L	D R	UNKN	0.041	mg/L	D -
Cadmium	FILT	0.005	mg/L	C	-		NA				NA		
Cadmium		NA				UNKN	0.002	mg/L	D R	UNKN	0.004	mg/L	D UJ
Calcium	FILT	87.000	mg/L	C	-		NA				NA		
Calcium		NA				UNKN	79.000	mg/L	D R	UNKN	75.100	mg/L	D -
Chromium	FILT	0.027	mg/L	C	-		NA				NA		
Chromium		NA				UNKN	0.023	mg/L	D R	UNKN	0.008	mg/L	D U
Copper	FILT	0.010	mg/L	C	U		NA				NA		
Copper		NA				UNKN	0.010	mg/L	D R	UNKN	0.004	mg/L	D U
Iron	FILT	1.600	mg/L	C	-		NA				NA		
Iron		NA				UNKN	0.054	mg/L	D R	UNKN	0.008	mg/L	D U
Lead	FILT	0.006	mg/L	C	U		NA				NA		
Lead		NA				UNKN	0.002	mg/L	D U	UNKN	0.001	mg/L	D U
Magnesium	FILT	26.000	mg/L	C	-		NA				NA		
Magnesium		NA				UNKN	20.800	mg/L	D R	UNKN	18.800	mg/L	D -
Manganese	FILT	0.011	mg/L	C	-		NA				NA		
Manganese		NA				UNKN	0.033	mg/L	D R	UNKN	0.007	mg/L	D U
Mercury	FILT	0.000	mg/L	C	U		NA				NA		
Mercury		NA				UNKN	0.000	mg/L	D U	UNKN	0.000	mg/L	D U
Molybdenum	FILT	0.010	mg/L	C	UJ		NA				NA		
Molybdenum		NA				UNKN	0.010	mg/L	D R	UNKN	0.003	mg/L	D UJ
Nickel	FILT	0.020	mg/L	C	U		NA				NA		
Nickel		NA				UNKN	0.020	mg/L	D R	UNKN	0.019	mg/L	D U
Potassium	FILT	2.540	mg/L	C	J		NA				NA		
Potassium		NA				UNKN	2.920	mg/L	D -	UNKN	2.680	mg/L	D -
Selenium	FILT	0.002	mg/L	C	U		NA				NA		
Selenium		NA				UNKN	0.003	mg/L	D U	UNKN	0.001	mg/L	D J
Silicon	FILT	3.800	mg/L	C	-		NA				NA		
Silicon		NA				UNKN	1.310	mg/L	D R	UNKN	2.530	mg/L	D J
Silver	FILT	0.010	mg/L	C	-		NA				NA		
Silver		NA				UNKN	0.019	mg/L	D R	UNKN	0.004	mg/L	D U
Sodium	FILT	17.100	mg/L	C	-		NA				NA		
Sodium		NA				UNKN	10.900	mg/L	D R	UNKN	12.900	mg/L	D -
Vanadium	FILT	0.016	mg/L	C	-		NA				NA		
Vanadium		NA				UNKN	0.010	mg/L	D R	UNKN	0.006	mg/L	D U
General Chemistry													
Ammonia		NA					NA			U	0.050	mg/L	C UJ

TABLE E-12A
(Continued)

PHASE I - CHEMICAL PARAMETERS

BORING NUMBER		2047				2402				2402			
SAMPLE NUMBER		004220				038304				038339			
SAMPLING DATE		04/03/90				01/28/92				04/07/92			
CHEMICAL PARAMETERS	FLTD	RESULTS	UNITS	L	VQ	FLTD	RESULTS	UNITS	L	VQ	FLTD	RESULTS	UNITS	L	VQ
General Chemistry															
Ammonia	UNFI	0.100	mg/L	C	U		NA					NA			
Ammonia		NA				UNKN	0.100	mg/L	C	U		NA			
Chloride	UNFI	11.300	mg/L	C	-		NA				UNFI	22.000	mg/L	C	J
Chloride		NA				UNKN	18.600	mg/L	C	-		NA			
Fluoride	UNFI	0.220	mg/L	C	-	UNFI	0.245	mg/L	C	-	UNFI	0.200	mg/L	C	J
Nitrate	UNFI	2.590	mg/L	C	R	UNFI	1.180	mg/L	C	-	UNFI	2.500	mg/L	C	J
Phenols	UNFI	0.021	mg/L	C	-	UNFI	0.010	mg/L	C	U	UNFI	0.010	mg/L	C	U
Phosphorus	UNFI	0.090	mg/L	C	-	UNFI	0.240	mg/L	C	-	UNFI	0.120	mg/L	C	J
Sulfate	UNFI	72.200	mg/L	C	-		NA				UNFI	63.000	mg/L	C	-
Sulfate		NA				UNKN	75.400	mg/L	C	J		NA			
Sulfide	UNFI	0.500	mg/L	C	U	UNFI	0.500	mg/L	C	U	UNFI	0.500	mg/L	C	U
Total Organic Carbon	UNFI	0.459	mg/L	C	U	UNFI	2.260	mg/L	C	-	UNFI	3.000	mg/L	C	-
Total Organic Halides	UNFI	0.010	mg/L	C	R	UNFI	0.016	mg/L	C	U	UNFI	0.010	mg/L	C	-
Total Organic Nitrogen	UNFI	0.100	mg/L	C	U	UNFI	0.290	mg/L	C	J	UNFI	1.000	mg/L	C	UJ

TABLE E-12A
(Continued)

PHASE I - CHEMICAL PARAMETERS

BORING NUMBER		3016					3016					3016				
SAMPLE NUMBER		003082					003435					003686				
SAMPLING DATE		04/08/88					08/03/88					11/04/88				
CHEMICAL PARAMETERS	FLTD	RESULTS	UNITS	L	VQ		FLTD	RESULTS	UNITS	L	VQ	FLTD	RESULTS	UNITS	L	VQ
Inorganics																
Arsenic		NA					*F	0.010	mg/L	C	U		NA			
Arsenic	FILT	0.200	mg/L	C	UJ		NA					FILT	0.002	mg/L	C	U
Barium		NA					*F	0.200	mg/L	C	U		NA			
Barium	FILT	0.049	mg/L	C	R		NA					FILT	0.040	mg/L	C	-
Cadmium		NA					*F	0.005	mg/L	C	U		NA			
Cadmium	FILT	0.002	mg/L	C	U		NA					FILT	0.002	mg/L	C	U
Calcium		NA					*F	86.000	mg/L	C	J		NA			
Calcium	FILT	80.900	mg/L	C	-		NA					FILT	82.900	mg/L	C	-
Chromium		NA					*F	0.010	mg/L	C	U		NA			
Chromium	FILT	0.020	mg/L	C	U		NA					FILT	0.020	mg/L	C	U
Copper		NA					*F	0.030	mg/L	C	U		NA			
Copper	FILT	0.010	mg/L	C	U		NA					FILT	0.010	mg/L	C	U
Iron		NA					*F	0.100	mg/L	C	U		NA			
Iron	FILT	0.025	mg/L	C	U		NA					FILT	0.100	mg/L	C	-
Lead		NA					*F	0.005	mg/L	C	U		NA			
Lead	FILT	0.050	mg/L	C	-		NA					FILT	0.003	mg/L	C	UJ
Magnesium		NA					*F	20.000	mg/L	C	J		NA			
Magnesium	FILT	20.440	mg/L	C	-		NA					FILT	21.400	mg/L	C	-
Manganese		NA					*F	0.020	mg/L	C	U		NA			
Manganese	FILT	0.019	mg/L	C	-		NA					FILT	0.050	mg/L	C	-
Mercury		NA					*F	0.000	mg/L	C	R		NA			
Mercury	FILT	0.000	mg/L	C	U		NA					FILT	0.000	mg/L	C	U
Molybdenum		NA					*F	0.050	mg/L	C	U		NA			
Molybdenum	FILT	0.020	mg/L	C	U		NA					FILT	0.020	mg/L	C	U
Nickel		NA					*F	0.040	mg/L	C	U		NA			
Nickel	FILT	0.020	mg/L	C	U		NA					FILT	0.020	mg/L	C	U
Potassium		NA					*F	5.000	mg/L	C	UJ		NA			
Potassium	FILT	2.880	mg/L	C	-		NA					FILT	2.530	mg/L	C	J
Selenium		NA					*F	0.005	mg/L	C	U		NA			
Selenium	FILT	0.200	mg/L	C	UJ		NA					FILT	0.002	mg/L	C	J
Silver		NA					*F	0.010	mg/L	C	U		NA			
Silver	FILT	0.010	mg/L	C	U		NA					FILT	0.010	mg/L	C	U
Sodium		NA					*F	12.000	mg/L	C	J		NA			
Sodium	FILT	13.070	mg/L	C	-		NA					FILT	11.300	mg/L	C	-
General Chemistry																
Ammonia	UNFI	0.100	mg/L	C	U		UNFI	0.100	mg/L	C	UJ	UNFI	0.100	mg/L	C	U
Chloride	UNFI	20.400	mg/L	C	-		UNFI	24.000	mg/L	C	J	UNFI	25.600	mg/L	C	-
Fluoride	UNFI	0.270	mg/L	C	-		UNFI	0.740	mg/L	C	J	UNFI	0.150	mg/L	C	J
Nitrate	UNFI	0.090	mg/L	C	J		UNFI	4.900	mg/L	C	J	UNFI	3.050	mg/L	C	J
Phenols	UNFI	0.010	mg/L	C	U		UNFI	0.050	mg/L	C	U	UNFI	0.010	mg/L	C	U

0240

R 5174

TABLE E-12A
(Continued)

PHASE I - CHEMICAL PARAMETERS .

BORING NUMBER		3016				3016				3016			
SAMPLE NUMBER		003082				003435				003686			
SAMPLING DATE		04/08/88				08/03/88				11/04/88			
CHEMICAL PARAMETERS	FLTD	RESULTS	UNITS	L	VQ	FLTD	RESULTS	UNITS	L	VQ	FLTD	RESULTS	UNITS	L	VQ
General Chemistry															
Phosphorus	UNFI	0.050	mg/L	C	U	UNFI	0.030	mg/L	C	J	UNFI	0.020	mg/L	C	U
Sulfate	UNFI	56.000	mg/L	C	-	UNFI	56.000	mg/L	C	J	UNFI	174.000	mg/L	C	-
Total Kjeldahl Nitrogen		NA					NA				UNFI	0.140	mg/L	C	J
Total Organic Halides		NA					NA				UNFI	0.050	mg/L	C	U
Total Organic Nitrogen	UNFI	0.210	mg/L	C	-	UNFI	0.100	mg/L	C	UJ	UNFI	0.140	mg/L	C	-

TABLE E-12A
(Continued)

PHASE I - CHEMICAL PARAMETERS

BORING NUMBER		3016					3016					3402			
SAMPLE NUMBER		003882					004241					038346			
SAMPLING DATE		02/07/89					03/04/90					04/09/92			
CHEMICAL PARAMETERS	FLTD	RESULTS	UNITS	L	VQ	FLTD	RESULTS	UNITS	L	VQ	FLTD	RESULTS	UNITS	L	VQ
Inorganics															
Aluminum		NA				FILT	0.081	mg/L	C	-		NA			
Aluminum		NA					NA				UNKN	0.027	mg/L	D	J
Arsenic	FILT	0.002	mg/L	C	U	FILT	0.002	mg/L	C	U		NA			
Arsenic		NA					NA				UNKN	0.001	mg/L	D	U
Barium	FILT	0.041	mg/L	C	-	FILT	0.037	mg/L	C	-		NA			
Barium		NA					NA				UNKN	0.054	mg/L	D	-
Cadmium	FILT	0.004	mg/L	C	-	FILT	0.002	mg/L	C	U		NA			
Cadmium		NA					NA				UNKN	0.006	mg/L	D	UJ
Calcium	FILT	84.500	mg/L	C	-	FILT	80.100	mg/L	C	-		NA			
Calcium		NA					NA				UNKN	79.600	mg/L	D	-
Chromium	FILT	0.023	mg/L	C	-	FILT	0.023	mg/L	C	-		NA			
Chromium		NA					NA				UNKN	0.004	mg/L	D	U
Copper	FILT	0.012	mg/L	C	-	FILT	0.010	mg/L	C	U		NA			
Copper		NA					NA				UNKN	0.008	mg/L	D	U
Iron	FILT	0.044	mg/L	C	-	FILT	0.125	mg/L	C	-		NA			
Iron		NA					NA				UNKN	0.011	mg/L	D	U
Lead	FILT	0.006	mg/L	C	-	FILT	0.002	mg/L	C	U		NA			
Lead		NA					NA				UNKN	0.001	mg/L	D	R
Magnesium	FILT	22.100	mg/L	C	-	FILT	20.700	mg/L	C	-		NA			
Magnesium		NA					NA				UNKN	20.200	mg/L	D	-
Manganese	FILT	0.007	mg/L	C	-	FILT	0.019	mg/L	C	-		NA			
Manganese		NA					NA				UNKN	0.061	mg/L	D	-
Mercury	FILT	0.000	mg/L	C	UJ	FILT	0.002	mg/L	C	U		NA			
Mercury		NA					NA				UNKN	0.000	mg/L	D	U
Molybdenum	FILT	0.020	mg/L	C	U	FILT	0.100	mg/L	C	U		NA			
Molybdenum		NA					NA				UNKN	0.004	mg/L	D	J
Nickel	FILT	0.020	mg/L	C	U	FILT	0.020	mg/L	C	U		NA			
Nickel		NA					NA				UNKN	0.044	mg/L	D	U
Potassium	FILT	2.190	mg/L	C	-	FILT	2.170	mg/L	C	-		NA			
Potassium		NA					NA				UNKN	2.560	mg/L	D	-
Selenium	FILT	0.002	mg/L	C	U	FILT	0.002	mg/L	C	UJ		NA			
Selenium		NA					NA				UNKN	0.001	mg/L	D	U
Silicon		NA				FILT	3.040	mg/L	C	J		NA			
Silicon		NA					NA				UNKN	3.360	mg/L	D	J
Silver	FILT	0.001	mg/L	C	U	FILT	0.010	mg/L	C	U		NA			
Silver		NA					NA				UNKN	0.004	mg/L	D	U
Sodium	FILT	10.500	mg/L	C	-	FILT	11.600	mg/L	C	-		NA			
Sodium		NA					NA				UNKN	12.500	mg/L	D	-
Vanadium		NA				FILT	0.014	mg/L	C	-		NA			
Vanadium		NA					NA				UNKN	0.007	mg/L	D	U
General Chemistry															
Ammonia	UNFI	0.100	mg/L	C	U	UNFI	0.100	mg/L	C	U	UNFI	0.070	mg/L	C	J

TABLE E-12A
(Continued)

PHASE I - CHEMICAL PARAMETERS

BORING NUMBER		3016				3016				3402			
SAMPLE NUMBER		003882				004241				038346			
SAMPLING DATE		02/07/89				03/04/90				04/09/92			
CHEMICAL PARAMETERS	FLTD	RESULTS	UNITS	L	VQ	FLTD	RESULTS	UNITS	L	VQ	FLTD	RESULTS	UNITS	L	VQ
General Chemistry															
Chloride	UNFI	24.500	mg/L	C	-	UNFI	8.800	mg/L	C	-	UNFI	23.000	mg/L	C	J
Fluoride	UNFI	0.180	mg/L	C	J	UNFI	0.180	mg/L	C	-	UNFI	0.100	mg/L	C	J
Nitrate	UNFI	2.620	mg/L	C	J	UNFI	2.790	mg/L	C	J	UNFI	2.700	mg/L	C	J
Phenols		NA					NA				U	0.010	mg/L	C	R
Phenols	UNFI	0.010	mg/L	C	R	UNFI	0.010	mg/L	C	U		NA			
Phosphorus	UNFI	0.070	mg/L	C	-	UNFI	0.040	mg/L	C	-	UNFI	0.130	mg/L	C	J
Sulfate	UNFI	59.800	mg/L	C	J	UNFI	51.200	mg/L	C	J	UNFI	66.000	mg/L	C	-
Sulfide		NA					NA				U	0.500	mg/L	C	U
Sulfide		NA				UNFI	0.500	mg/L	C	R		NA			
Total Kjeldahl Nitrogen	UNFI	0.202	mg/L	C	J	UNFI	0.100	mg/L	C	U		NA			
Total Organic Carbon		NA				UNFI	1.360	mg/L	C	-		NA			
Total Organic Carbon		NA					NA				UNKN	4.000	mg/L	C	-
Total Organic Halides		NA					NA				U	0.010	mg/L	C	U
Total Organic Halides	UNFI	0.050	mg/L	C	U	UNFI	0.010	mg/L	C	U		NA			
Total Organic Nitrogen	UNFI	0.202	mg/L	C	J	UNFI	0.100	mg/L	C	U	UNFI	1.000	mg/L	C	J

TABLE E-12A
(Continued)

PHASE I - CHEMICAL PARAMETERS

BORING NUMBER		3402					4016				
SAMPLE NUMBER		038384					004090				
SAMPLING DATE		06/10/92					05/01/89				
CHEMICAL PARAMETERS	FLTD	RESULTS	UNITS	L	VQ	FLTD	RESULTS	UNITS	L	VQ
Inorganics										
Aluminum	UNKN	0.022	mg/L	D	U		NA			
Arsenic		NA				FILT	0.002	mg/L	C	U
Arsenic	UNKN	0.001	mg/L	D	U		NA			
Barium		NA				FILT	0.038	mg/L	C	-
Barium	UNKN	0.040	mg/L	D	-		NA			
Cadmium		NA				FILT	0.004	mg/L	C	-
Cadmium	UNKN	0.006	mg/L	D	U		NA			
Calcium		NA				FILT	102.000	mg/L	C	-
Calcium	UNKN	83.400	mg/L	D	-		NA			
Chromium		NA				FILT	0.015	mg/L	C	U
Chromium	UNKN	0.004	mg/L	D	U		NA			
Copper		NA				FILT	0.010	mg/L	C	U
Copper	UNKN	0.008	mg/L	D	UJ		NA			
Iron		NA				FILT	1.240	mg/L	C	-
Iron	UNKN	0.011	mg/L	D	U		NA			
Lead		NA				FILT	0.004	mg/L	C	R
Lead	UNKN	0.002	mg/L	D	-		NA			
Magnesium		NA				FILT	26.100	mg/L	C	-
Magnesium	UNKN	20.600	mg/L	D	-		NA			
Manganese		NA				FILT	0.858	mg/L	C	-
Manganese	UNKN	0.034	mg/L	D	-		NA			
Mercury		NA				FILT	0.000	mg/L	C	U
Mercury	UNKN	0.000	mg/L	D	U		NA			
Molybdenum		NA				FILT	0.010	mg/L	C	U
Molybdenum	UNKN	0.011	mg/L	D	U		NA			
Nickel		NA				FILT	0.020	mg/L	C	U
Nickel	UNKN	0.044	mg/L	D	U		NA			
Potassium		NA				FILT	1.200	mg/L	C	-
Potassium	UNKN	2.760	mg/L	D	-		NA			
Selenium		NA				FILT	0.002	mg/L	C	R
Selenium	UNKN	0.001	mg/L	D	U		NA			
Silicon	UNKN	3.350	mg/L	D	J		NA			
Silver		NA				FILT	0.001	mg/L	C	U
Silver	UNKN	0.004	mg/L	D	U		NA			
Sodium		NA				FILT	5.760	mg/L	C	-
Sodium	UNKN	12.400	mg/L	D	-		NA			
Vanadium	UNKN	0.007	mg/L	D	U		NA			
General Chemistry										
Ammonia	UNFI	0.050	mg/L	C	U	UNFI	0.100	mg/L	C	U
Chloride	UNFI	21.000	mg/L	C	J	UNFI	13.000	mg/L	C	-

0244

5174

TABLE E-12A
(Continued)

PHASE I - CHEMICAL PARAMETERS

BORING NUMBER		3402				4016			
SAMPLE NUMBER		038384				004090			
SAMPLING DATE		06/10/92				05/01/89			
CHEMICAL PARAMETERS	FLTD	RESULTS	UNITS	L	VQ	FLTD *	RESULTS	UNITS	L	VQ
General Chemistry										
Fluoride	UNFI	0.100	mg/L	C	J	UNFI	0.180	mg/L	C	-
Nitrate	UNFI	0.100	mg/L	C	-	UNFI	0.100	mg/L	C	R
Phenols	UNFI	0.010	mg/L	C	U	UNFI	0.010	mg/L	C	U
Phosphorus	UNFI	0.020	mg/L	C	-	UNFI	0.067	mg/L	C	-
Sulfate	UNFI	48.000	mg/L	C	J	UNFI	110.000	mg/L	C	J
Sulfide	UNFI	0.500	mg/L	C	U		NA			
Total Kjeldahl Nitrogen		NA				UNFI	0.172	mg/L	C	-
Total Organic Carbon	UNFI	1.000	mg/L	C	U		NA			
Total Organic Halides	UNFI	0.020	mg/L	C	UJ	UNFI	0.010	mg/L	C	U
Total Organic Nitrogen	UNFI	1.000	mg/L	C	UJ	UNFI	0.172	mg/L	C	J

0245

TABLE E-12A
(Continued)

PHASE II - RADIOLOGICAL PARAMETERS

BORING NUMBER		1047				2016				2047			
SAMPLE NUMBER		110892				111996				110894			
SAMPLING DATE		04/27/93				04/30/93				04/27/93			
RADIOLOGICAL PARAMETERS	FLTD	RESULTS	UNITS	VQ	FLTD	RESULTS	UNITS	VQ	FLTD	RESULTS	UNITS	VQ
CS-137		NA				NA			FILT	14.000	pci/L	UJ
CS-137	UNFI	15.000	pci/L	UJ	UNFI	13.400	pci/L	UJ		NA		
GROSS ALPHA		NA				NA			FILT	7.100	pci/L	UJ
GROSS ALPHA	UNFI	12.000	pci/L	UJ	UNFI	6.990	pci/L	J		NA		
GROSS BETA		NA				NA			FILT	5.400	pci/L	J
GROSS BETA	UNFI	11.000	pci/L	UJ	UNFI	9.340	pci/L	J		NA		
NP-237		NA				NA			FILT	0.220	pci/L	U
NP-237	UNFI	0.130	pci/L	U	UNFI	0.710	pci/L	N		NA		
PU-238		NA				NA			FILT	0.044	pci/L	UJ
PU-238	UNFI	0.097	pci/L	UJ	UNFI	0.160	pci/L	J		NA		
PU-239/240		NA				NA			FILT	0.091	pci/L	UJ
PU-239/240	UNFI	0.097	pci/L	UJ	UNFI	0.056	pci/L	U		NA		
RA-226		NA				NA			FILT	0.236	pci/L	J
RA-226	UNFI	0.674	pci/L	UJ	UNFI	0.130	pci/L	UJ		NA		
RA-228		NA				NA			FILT	5.650	pci/L	UJ
RA-228	UNFI	5.930	pci/L	J	UNFI	1.310	pci/L	UJ		NA		
RU-106		NA				NA			FILT	124.000	pci/L	UJ
RU-106	UNFI	122.000	pci/L	UJ	UNFI	120.000	pci/L	UJ		NA		
SR-90		NA				NA			FILT	0.989	pci/L	U
SR-90	UNFI	0.754	pci/L	UJ	UNFI	0.100	pci/L	UJ		NA		
TC-99		NA				NA			FILT	9.700	pci/L	UJ
TC-99	UNFI	10.500	pci/L	UJ	UNFI	9.000	pci/L	UJ		NA		
TH-228		NA				NA			FILT	0.101	pci/L	UJ
TH-228	UNFI	0.132	pci/L	UJ	UNFI	0.013	pci/L	UJ		NA		
TH-230		NA				NA			FILT	0.408	pci/L	J
TH-230	UNFI	0.227	pci/L	J	UNFI	0.800	pci/L	J		NA		
TH-232		NA				NA			FILT	0.083	pci/L	UJ
TH-232	UNFI	0.122	pci/L	UJ	UNFI	0.140	pci/L	J		NA		
TH-TOTAL		NA				NA			FILT	0.764	ug/L	UJ
TH-TOTAL	UNFI	1.120	ug/L	UJ	UNFI	1.270	ug/L	J		NA		
U-234		NA				NA			FILT	3.740	pci/L	-
U-234	UNFI	2.330	pci/L	-	UNFI	6.020	pci/L	-		NA		
U-235/236		NA				NA			FILT	0.150	pci/L	J
U-235/236	UNFI	0.124	pci/L	UJ	UNFI	0.460	pci/L	J		NA		
U-238		NA				NA			FILT	3.380	pci/L	-
U-238	UNFI	1.620	pci/L	-	UNFI	6.500	pci/L	-		NA		
U-TOTAL		NA				NA			FILT	9.510	ug/L	-
U-TOTAL	UNFI	5.360	ug/L	-	UNFI	17.100	ug/L	-		NA		

0246

5174

TABLE E-12A
(Continued)

PHASE II - RADIOLOGICAL PARAMETERS

BORING NUMBER		2402				2402				2955			
SAMPLE NUMBER		116225				116226				113801			
SAMPLING DATE		05/05/93				05/05/93				06/22/93			
RADIOLOGICAL PARAMETERS	FLTD	RESULTS	UNITS	VQ	FLTD	RESULTS	UNITS	VQ	FLTD	RESULTS	UNITS	VQ
CS-137		NA			FILT	13.800	pci/L	UJ	FILT	15.300	pci/L	UJ
CS-137	UNFI	10.500	pci/L	UJ		NA			UNFI	11.700	pci/L	UJ
GROSS ALPHA		NA				NA			FILT	6.140	pci/L	UJ
GROSS ALPHA	UNFI	9.520	pci/L	J		NA			UNFI	6.970	pci/L	J
GROSS BETA		NA				NA			FILT	5.120	pci/L	J
GROSS BETA	UNFI	7.930	pci/L	J		NA			UNFI	5.050	pci/L	J
NP-237		NA			FILT	0.300	pci/L	N	FILT	0.216	pci/L	U
NP-237	UNFI	0.280	pci/L	N		NA			UNFI	0.121	pci/L	U
PU-238		NA			FILT	0.070	pci/L	UJ	FILT	0.046	pci/L	UJ
PU-238	UNFI	0.140	pci/L	UJ		NA			UNFI	0.106	pci/L	UJ
PU-239/240		NA			FILT	0.070	pci/L	UJ	FILT	0.117	pci/L	UJ
PU-239/240	UNFI	0.060	pci/L	J		NA			UNFI	0.087	pci/L	UJ
RA-226		NA			FILT	0.120	pci/L	UJ	FILT	0.141	pci/L	J
RA-226	UNFI	0.200	pci/L	J		NA			UNFI	0.275	pci/L	J
RA-228		NA			FILT	1.080	pci/L	UJ	FILT	1.300	pci/L	UJ
RA-228	UNFI	1.800	pci/L	UJ		NA			UNFI	1.390	pci/L	UJ
RU-106		NA			FILT	137.000	pci/L	UJ	FILT	148.000	pci/L	UJ
RU-106	UNFI	136.000	pci/L	UJ		NA			UNFI	109.000	pci/L	UJ
SR-90		NA			FILT	2.680	pci/L	U	FILT	0.803	pci/L	UJ
SR-90	UNFI	0.810	pci/L	UJ		NA			UNFI	0.794	pci/L	UJ
TC-99		NA			FILT	11.300	pci/L	UJ	FILT	10.300	pci/L	UJ
TC-99	UNFI	10.800	pci/L	UJ		NA			UNFI	10.600	pci/L	UJ
TH-228		NA			FILT	0.210	pci/L	-	FILT	0.249	pci/L	UJ
TH-228	UNFI	0.170	pci/L	UJ		NA			UNFI	0.186	pci/L	UJ
TH-230		NA			FILT	0.180	pci/L	-	FILT	0.086	pci/L	U
TH-230	UNFI	0.320	pci/L	J		NA			UNFI	0.277	pci/L	J
TH-232		NA			FILT	0.190	pci/L	UJ	FILT	0.226	pci/L	UJ
TH-232	UNFI	0.150	pci/L	UJ		NA			UNFI	0.100	pci/L	UJ
TH-TOTAL		NA			FILT	1.750	ug/L	UJ	FILT	2.080	ug/L	UJ
TH-TOTAL	UNFI	1.350	ug/L	UJ		NA			UNFI	0.920	ug/L	UJ
U-234		NA			FILT	4.540	pci/L	-	FILT	2.570	pci/L	-
U-234	UNFI	2.170	pci/L	-		NA			UNFI	2.990	pci/L	-
U-235/236		NA			FILT	0.160	pci/L	-	FILT	0.103	pci/L	J
U-235/236	UNFI	0.150	pci/L	J		NA			UNFI	0.698	pci/L	J
U-238		NA			FILT	5.890	pci/L	-	FILT	2.750	pci/L	-
U-238	UNFI	3.180	pci/L	-		NA			UNFI	3.010	pci/L	-
U-TOTAL		NA			FILT	15.200	ug/L	-	FILT	8.110	ug/L	-
U-TOTAL	UNFI	5.620	ug/L	-		NA			UNFI	8.190	ug/L	-

TABLE E-12A
(Continued)

PHASE II - CHEMICAL PARAMETERS

BORING NUMBER		1047					2016					2047				
SAMPLE NUMBER		110892					111996					110894				
SAMPLING DATE		04/27/93					04/30/93					04/27/93				
CHEMICAL PARAMETERS	FLTD	RESULTS	UNITS	L	VQ		FLTD	RESULTS	UNITS	L	VQ	FLTD	RESULTS	UNITS	L	VQ
Inorganics																
Aluminum	FILT	0.083	mg/L	C	U		NA					FILT	0.070	mg/L	C	U
Aluminum	NA						UNFI	0.366	mg/L	C	-	NA				
Antimony	FILT	0.001	mg/L	C	U		NA					FILT	0.001	mg/L	C	U
Antimony	NA						UNFI	0.001	mg/L	C	UJ	NA				
Arsenic	FILT	0.001	mg/L	C	U		NA					FILT	0.001	mg/L	C	U
Arsenic	NA						UNFI	0.001	mg/L	C	U	NA				
Barium	FILT	0.046	mg/L	C	-		NA					FILT	0.051	mg/L	C	-
Barium	NA						UNFI	0.048	mg/L	C	J	NA				
Beryllium	FILT	0.003	mg/L	C	U		NA					FILT	0.003	mg/L	C	U
Beryllium	NA						UNFI	0.002	mg/L	C	U	NA				
Cadmium	FILT	0.002	mg/L	C	U		NA					FILT	0.002	mg/L	C	U
Cadmium	NA						UNFI	0.002	mg/L	C	U	NA				
Calcium	FILT	112.000	mg/L	C	-		NA					FILT	94.600	mg/L	C	-
Calcium	NA						UNFI	90.400	mg/L	C	-	NA				
Chromium	FILT	0.004	mg/L	C	U		NA					FILT	0.004	mg/L	C	U
Chromium	NA						UNFI	0.004	mg/L	C	U	NA				
Cobalt	FILT	0.003	mg/L	C	U		NA					FILT	0.003	mg/L	C	U
Cobalt	NA						UNFI	0.003	mg/L	C	U	NA				
Copper	FILT	0.009	mg/L	C	U		NA					FILT	0.006	mg/L	C	U
Copper	NA						UNFI	0.007	mg/L	C	U	NA				
Cyanide	UNFI	0.001	mg/L	C	U		UNFI	0.001	mg/L	C	U	UNFI	0.001	mg/L	C	U
Iron	FILT	0.031	mg/L	C	U		NA					FILT	0.023	mg/L	C	U
Iron	NA						UNFI	0.865	mg/L	C	-	NA				
Lead	FILT	0.001	mg/L	C	U		NA					FILT	0.001	mg/L	C	U
Lead	NA						UNFI	0.001	mg/L	C	-	NA				
Magnesium	FILT	50.600	mg/L	C	-		NA					FILT	27.400	mg/L	C	-
Magnesium	NA						UNFI	23.600	mg/L	C	-	NA				
Manganese	FILT	0.002	mg/L	C	U		NA					FILT	0.002	mg/L	C	U
Manganese	NA						UNFI	0.026	mg/L	C	-	NA				
Mercury	FILT	0.000	mg/L	C	U		NA					FILT	0.000	mg/L	C	U
Mercury	NA						UNFI	0.000	mg/L	C	U	NA				
Molybdenum	FILT	0.005	mg/L	C	-		NA					FILT	0.003	mg/L	C	U
Molybdenum	NA						UNFI	0.003	mg/L	C	U	NA				
Nickel	FILT	0.003	mg/L	C	U		NA					FILT	0.003	mg/L	C	U
Nickel	NA						UNFI	0.003	mg/L	C	U	NA				
Potassium	FILT	1.500	mg/L	C	-		NA					FILT	2.770	mg/L	C	-
Potassium	NA						UNFI	2.610	mg/L	C	-	NA				
Selenium	FILT	0.001	mg/L	C	UJ		NA					FILT	0.001	mg/L	C	U
Selenium	NA						UNFI	0.001	mg/L	C	U	NA				
Silicon	FILT	6.220	mg/L	C	-		NA					FILT	4.100	mg/L	C	-
Silicon	NA						UNFI	3.450	mg/L	C	-	NA				
Silver	FILT	0.002	mg/L	C	U		NA					FILT	0.002	mg/L	C	U

TABLE E-12A
(Continued)

PHASE II - CHEMICAL PARAMETERS

BORING NUMBER		1047				2016				2047			
SAMPLE NUMBER		110892				111996				110894			
SAMPLING DATE		04/27/93				04/30/93				04/27/93			
CHEMICAL PARAMETERS	FLTD	RESULTS	UNITS	L	VQ	FLTD	RESULTS	UNITS	L	VQ	FLTD	RESULTS	UNITS	L	VQ
Inorganics															
Silver		NA				UNFI	0.002	mg/L	C	U		NA			
Sodium	FILT	40.900	mg/L	C	-		NA				FILT	11.000	mg/L	C	-
Sodium		NA				UNFI	12.100	mg/L	C	-		NA			
Thallium	FILT	0.001	mg/L	C	U		NA				FILT	0.001	mg/L	C	U
Thallium		NA				UNFI	0.001	mg/L	C	U		NA			
Vanadium	FILT	0.010	mg/L	C	U		NA				FILT	0.011	mg/L	C	U
Vanadium		NA				UNFI	0.007	mg/L	C	U		NA			
Zinc	FILT	0.007	mg/L	C	-		NA				FILT	0.004	mg/L	C	-
Zinc		NA				UNFI	0.014	mg/L	C	U		NA			
Volatile Organics															
1,1,1-Trichloroethane	UNFI	10.000	ug/L	C	U	UNFI	10.000	ug/L	C	U	UNFI	10.000	ug/L	C	U
1,1,2,2-Tetrachloroethane	UNFI	10.000	ug/L	C	U	UNFI	10.000	ug/L	C	U	UNFI	10.000	ug/L	C	U
1,1,2-Trichloroethane	UNFI	10.000	ug/L	C	U	UNFI	10.000	ug/L	C	U	UNFI	10.000	ug/L	C	U
1,1-Dichloroethane	UNFI	10.000	ug/L	C	U	UNFI	10.000	ug/L	C	U	UNFI	10.000	ug/L	C	U
1,1-Dichloroethene	UNFI	10.000	ug/L	C	U	UNFI	10.000	ug/L	C	U	UNFI	10.000	ug/L	C	U
1,2-Dichloroethane	UNFI	10.000	ug/L	C	U	UNFI	10.000	ug/L	C	U	UNFI	10.000	ug/L	C	U
1,2-Dichloroethene	UNFI	10.000	ug/L	C	U	UNFI	10.000	ug/L	C	U	UNFI	10.000	ug/L	C	U
1,2-Dichloropropane	UNFI	10.000	ug/L	C	U	UNFI	10.000	ug/L	C	U	UNFI	10.000	ug/L	C	U
2-Butanone	UNFI	10.000	ug/L	C	U	UNFI	10.000	ug/L	C	U	UNFI	10.000	ug/L	C	U
2-Hexanone	UNFI	10.000	ug/L	C	UJ	UNFI	10.000	ug/L	C	UJ	UNFI	10.000	ug/L	C	UJ
4-Methyl-2-pentanone	UNFI	10.000	ug/L	C	U	UNFI	10.000	ug/L	C	U	UNFI	10.000	ug/L	C	U
Acetone	UNFI	10.000	ug/L	C	U	UNFI	10.000	ug/L	C	U	UNFI	1.000	ug/L	C	U
Benzene	UNFI	10.000	ug/L	C	U	UNFI	10.000	ug/L	C	U	UNFI	10.000	ug/L	C	U
Bromodichloromethane	UNFI	10.000	ug/L	C	U	UNFI	10.000	ug/L	C	U	UNFI	10.000	ug/L	C	U
Bromoform	UNFI	10.000	ug/L	C	U	UNFI	10.000	ug/L	C	U	UNFI	10.000	ug/L	C	U
Bromomethane	UNFI	10.000	ug/L	C	U	UNFI	10.000	ug/L	C	U	UNFI	10.000	ug/L	C	U
Carbon Tetrachloride	UNFI	10.000	ug/L	C	U	UNFI	10.000	ug/L	C	U	UNFI	10.000	ug/L	C	U
Carbon disulfide	UNFI	10.000	ug/L	C	U	UNFI	10.000	ug/L	C	UJ	UNFI	10.000	ug/L	C	U
Chlorobenzene	UNFI	10.000	ug/L	C	U	UNFI	10.000	ug/L	C	U	UNFI	10.000	ug/L	C	U
Chloroethane	UNFI	10.000	ug/L	C	U	UNFI	10.000	ug/L	C	UJ	UNFI	10.000	ug/L	C	U
Chloroform	UNFI	10.000	ug/L	C	U	UNFI	10.000	ug/L	C	U	UNFI	10.000	ug/L	C	U
Chloromethane	UNFI	10.000	ug/L	C	UJ	UNFI	10.000	ug/L	C	UJ	UNFI	10.000	ug/L	C	UJ
Dibromochloromethane	UNFI	10.000	ug/L	C	U	UNFI	10.000	ug/L	C	U	UNFI	10.000	ug/L	C	U
Ethylbenzene	UNFI	10.000	ug/L	C	U	UNFI	10.000	ug/L	C	U	UNFI	10.000	ug/L	C	U
Methylene chloride	UNFI	10.000	ug/L	C	UJ	UNFI	12.000	ug/L	C	UJ	UNFI	10.000	ug/L	C	UJ
Styrene	UNFI	10.000	ug/L	C	U	UNFI	10.000	ug/L	C	U	UNFI	10.000	ug/L	C	U
Tetrachloroethene	UNFI	10.000	ug/L	C	U	UNFI	10.000	ug/L	C	U	UNFI	10.000	ug/L	C	U
Toluene	UNFI	10.000	ug/L	C	U	UNFI	10.000	ug/L	C	U	UNFI	10.000	ug/L	C	U
Trichloroethene	UNFI	10.000	ug/L	C	U	UNFI	10.000	ug/L	C	U	UNFI	10.000	ug/L	C	U
Vinyl Acetate	UNFI	10.000	ug/L	C	U	UNFI	10.000	ug/L	C	U	UNFI	10.000	ug/L	C	U

TABLE E-12A
(Continued)

PHASE II - CHEMICAL PARAMETERS

BORING NUMBER		1047				2016				2047			
SAMPLE NUMBER		110892				111996				110894			
SAMPLING DATE		04/27/93				04/30/93				04/27/93			
CHEMICAL PARAMETERS	FLTD	RESULTS	UNITS	L	VQ	FLTD	RESULTS	UNITS	L	VQ	FLTD	RESULTS	UNITS	L	VQ
Volatile Organics															
Vinyl chloride	UNFI	10.000	ug/L	C	UJ	UNFI	10.000	ug/L	C	U	UNFI	10.000	ug/L	C	UJ
Xylenes, Total	UNFI	10.000	ug/L	C	U	UNFI	10.000	ug/L	C	U	UNFI	10.000	ug/L	C	U
cis-1,3-Dichloropropene	UNFI	10.000	ug/L	C	U	UNFI	10.000	ug/L	C	U	UNFI	10.000	ug/L	C	U
trans-1,3-Dichloropropene	UNFI	10.000	ug/L	C	U	UNFI	10.000	ug/L	C	U	UNFI	10.000	ug/L	C	U
Semivolatile Organics															
1,2,4-Trichlorobenzene	UNFI	10.000	ug/L	C	U	UNFI	10.000	ug/L	C	U	UNFI	10.000	ug/L	C	U
1,2-Dichlorobenzene	UNFI	10.000	ug/L	C	U	UNFI	10.000	ug/L	C	U	UNFI	10.000	ug/L	C	U
1,3-Dichlorobenzene	UNFI	10.000	ug/L	C	U	UNFI	10.000	ug/L	C	U	UNFI	10.000	ug/L	C	U
1,4-Dichlorobenzene	UNFI	10.000	ug/L	C	U	UNFI	10.000	ug/L	C	U	UNFI	10.000	ug/L	C	U
2,4,5-Trichlorophenol	UNFI	25.000	ug/L	C	U	UNFI	25.000	ug/L	C	U	UNFI	25.000	ug/L	C	U
2,4,6-Trichlorophenol	UNFI	10.000	ug/L	C	U	UNFI	10.000	ug/L	C	U	UNFI	10.000	ug/L	C	U
2,4-Dichlorophenol	UNFI	10.000	ug/L	C	U	UNFI	10.000	ug/L	C	U	UNFI	10.000	ug/L	C	U
2,4-Dimethylphenol	UNFI	10.000	ug/L	C	U	UNFI	10.000	ug/L	C	U	UNFI	10.000	ug/L	C	U
2,4-Dinitrophenol	UNFI	25.000	ug/L	C	U	UNFI	25.000	ug/L	C	R	UNFI	25.000	ug/L	C	U
2,4-Dinitrotoluene	UNFI	10.000	ug/L	C	U	UNFI	10.000	ug/L	C	U	UNFI	10.000	ug/L	C	U
2,6-Dinitrotoluene	UNFI	10.000	ug/L	C	U	UNFI	10.000	ug/L	C	U	UNFI	10.000	ug/L	C	U
2-Chloronaphthalene	UNFI	10.000	ug/L	C	U	UNFI	10.000	ug/L	C	U	UNFI	10.000	ug/L	C	U
2-Chlorophenol	UNFI	10.000	ug/L	C	U	UNFI	10.000	ug/L	C	U	UNFI	10.000	ug/L	C	U
2-Methylnaphthalene	UNFI	10.000	ug/L	C	U	UNFI	10.000	ug/L	C	U	UNFI	10.000	ug/L	C	U
2-Methylphenol	UNFI	10.000	ug/L	C	U	UNFI	10.000	ug/L	C	U	UNFI	10.000	ug/L	C	U
2-Nitroaniline	UNFI	25.000	ug/L	C	U	UNFI	25.000	ug/L	C	U	UNFI	25.000	ug/L	C	U
2-Nitrophenol	UNFI	10.000	ug/L	C	U	UNFI	10.000	ug/L	C	U	UNFI	10.000	ug/L	C	U
3,3'-Dichlorobenzidine	UNFI	10.000	ug/L	C	UJ	UNFI	10.000	ug/L	C	U	UNFI	10.000	ug/L	C	UJ
3-Nitroaniline	UNFI	25.000	ug/L	C	UJ	UNFI	25.000	ug/L	C	U	UNFI	25.000	ug/L	C	UJ
4,6-Dinitro-2-methylphenol	UNFI	25.000	ug/L	C	U	UNFI	25.000	ug/L	C	R	UNFI	25.000	ug/L	C	U
4-Bromophenyl phenyl ether	UNFI	10.000	ug/L	C	U	UNFI	10.000	ug/L	C	U	UNFI	10.000	ug/L	C	U
4-Chloro-3-methylphenol	UNFI	10.000	ug/L	C	U	UNFI	10.000	ug/L	C	U	UNFI	10.000	ug/L	C	U
4-Chlorophenylphenyl ether	UNFI	10.000	ug/L	C	U	UNFI	10.000	ug/L	C	U	UNFI	10.000	ug/L	C	U
4-Methylphenol	UNFI	10.000	ug/L	C	U	UNFI	10.000	ug/L	C	U	UNFI	10.000	ug/L	C	U
4-Nitroaniline	UNFI	25.000	ug/L	C	R	UNFI	25.000	ug/L	C	U	UNFI	25.000	ug/L	C	R
4-Nitrophenol	UNFI	25.000	ug/L	C	R	UNFI	25.000	ug/L	C	R	UNFI	25.000	ug/L	C	R
Acenaphthene	UNFI	10.000	ug/L	C	U	UNFI	10.000	ug/L	C	U	UNFI	10.000	ug/L	C	U
Acenaphthylene	UNFI	10.000	ug/L	C	U	UNFI	10.000	ug/L	C	U	UNFI	10.000	ug/L	C	U
Anthracene	UNFI	10.000	ug/L	C	U	UNFI	10.000	ug/L	C	U	UNFI	10.000	ug/L	C	U
Benzo(a)anthracene	UNFI	10.000	ug/L	C	U	UNFI	10.000	ug/L	C	U	UNFI	10.000	ug/L	C	U
Benzo(a)pyrene	UNFI	10.000	ug/L	C	U	UNFI	10.000	ug/L	C	U	UNFI	10.000	ug/L	C	U
Benzo(b)fluoranthene	UNFI	10.000	ug/L	C	U	UNFI	10.000	ug/L	C	U	UNFI	10.000	ug/L	C	U
Benzo(g,h,i)perylene	UNFI	10.000	ug/L	C	U	UNFI	10.000	ug/L	C	U	UNFI	10.000	ug/L	C	U
Benzo(k)fluoranthene	UNFI	10.000	ug/L	C	UJ	UNFI	10.000	ug/L	C	U	UNFI	10.000	ug/L	C	UJ
Benzoic acid	UNFI	50.000	ug/L	C	U	UNFI	50.000	ug/L	C	R	UNFI	50.000	ug/L	C	U

TABLE E-12A
(Continued)

PHASE II - CHEMICAL PARAMETERS

BORING NUMBER	1047				2016				2047			
SAMPLE NUMBER	110892				111996				110894			
SAMPLING DATE	04/27/93				04/30/93				04/27/93			
CHEMICAL PARAMETERS	FLTD	RESULTS	UNITS	L VQ	FLTD	RESULTS	UNITS	L VQ	FLTD	RESULTS	UNITS	L VQ
Semivolatile Organics												
Benzyl alcohol	UNFI	10.000	ug/L	C U	UNFI	10.000	ug/L	C UJ	UNFI	10.000	ug/L	C U
Butyl benzyl phthalate	UNFI	10.000	ug/L	C U	UNFI	10.000	ug/L	C UJ	UNFI	10.000	ug/L	C U
Carbazole	UNFI	10.000	ug/L	C U	UNFI	10.000	ug/L	C U	UNFI	10.000	ug/L	C U
Chrysene	UNFI	10.000	ug/L	C U	UNFI	10.000	ug/L	C U	UNFI	10.000	ug/L	C U
Di-n-butyl phthalate	UNFI	10.000	ug/L	C UJ	UNFI	10.000	ug/L	C U	UNFI	10.000	ug/L	C UJ
Di-n-octyl phthalate	UNFI	10.000	ug/L	C UJ	UNFI	10.000	ug/L	C R	UNFI	10.000	ug/L	C UJ
Dibenzo(a,h)anthracene	UNFI	10.000	ug/L	C U	UNFI	10.000	ug/L	C UJ	UNFI	10.000	ug/L	C U
Dibenzofuran	UNFI	10.000	ug/L	C U	UNFI	10.000	ug/L	C U	UNFI	10.000	ug/L	C U
Diethyl phthalate	UNFI	10.000	ug/L	C UJ	UNFI	10.000	ug/L	C U	UNFI	10.000	ug/L	C UJ
Dimethyl phthalate	UNFI	10.000	ug/L	C U	UNFI	10.000	ug/L	C U	UNFI	10.000	ug/L	C U
Fluoranthene	UNFI	10.000	ug/L	C U	UNFI	10.000	ug/L	C U	UNFI	10.000	ug/L	C U
Fluorene	UNFI	10.000	ug/L	C U	UNFI	10.000	ug/L	C U	UNFI	10.000	ug/L	C U
Hexachlorobenzene	UNFI	10.000	ug/L	C U	UNFI	10.000	ug/L	C UJ	UNFI	10.000	ug/L	C U
Hexachlorobutadiene	UNFI	10.000	ug/L	C UJ	UNFI	10.000	ug/L	C U	UNFI	10.000	ug/L	C UJ
Hexachlorocyclopentadiene	UNFI	10.000	ug/L	C U	UNFI	10.000	ug/L	C UJ	UNFI	10.000	ug/L	C U
Hexachloroethane	UNFI	10.000	ug/L	C U	UNFI	10.000	ug/L	C U	UNFI	10.000	ug/L	C U
Indeno(1,2,3-cd)pyrene	UNFI	10.000	ug/L	C U	UNFI	10.000	ug/L	C UJ	UNFI	10.000	ug/L	C U
Isophorone	UNFI	10.000	ug/L	C U	UNFI	10.000	ug/L	C U	UNFI	10.000	ug/L	C U
N-Nitroso-di-n-propylamine	UNFI	10.000	ug/L	C U	UNFI	10.000	ug/L	C U	UNFI	10.000	ug/L	C U
N-Nitrosodiphenylamine	UNFI	10.000	ug/L	C U	UNFI	10.000	ug/L	C U	UNFI	10.000	ug/L	C U
Naphthalene	UNFI	10.000	ug/L	C U	UNFI	10.000	ug/L	C U	UNFI	10.000	ug/L	C U
Nitrobenzene	UNFI	10.000	ug/L	C U	UNFI	10.000	ug/L	C U	UNFI	10.000	ug/L	C U
Pentachlorophenol	UNFI	25.000	ug/L	C U	UNFI	25.000	ug/L	C UJ	UNFI	25.000	ug/L	C U
Phenanthrene	UNFI	10.000	ug/L	C U	UNFI	10.000	ug/L	C U	UNFI	10.000	ug/L	C U
Phenol	UNFI	10.000	ug/L	C U	UNFI	10.000	ug/L	C U	UNFI	10.000	ug/L	C U
Pyrene	UNFI	10.000	ug/L	C U	UNFI	10.000	ug/L	C U	UNFI	10.000	ug/L	C U
bis(2-Chloroethoxy)methane	UNFI	10.000	ug/L	C U	UNFI	10.000	ug/L	C U	UNFI	10.000	ug/L	C U
bis(2-Chloroethyl)ether	UNFI	10.000	ug/L	C U	UNFI	10.000	ug/L	C U	UNFI	10.000	ug/L	C U
bis(2-Chloroisopropyl) ether	UNFI	10.000	ug/L	C UJ	UNFI	10.000	ug/L	C U	UNFI	10.000	ug/L	C UJ
bis(2-Ethylhexyl) phthalate	UNFI	10.000	ug/L	C U	UNFI	10.000	ug/L	C UJ	UNFI	10.000	ug/L	C U
p-Chloroaniline	UNFI	10.000	ug/L	C R	UNFI	10.000	ug/L	C U	UNFI	10.000	ug/L	C R
Pesticide Organics/PCBs												
4,4'-DDD	UNFI	0.100	ug/L	C U	UNFI	0.100	ug/L	C U	UNFI	0.100	ug/L	C U
4,4'-DDE	UNFI	0.100	ug/L	C U	UNFI	0.100	ug/L	C U	UNFI	0.100	ug/L	C U
4,4'-DDT	UNFI	0.100	ug/L	C U	UNFI	0.100	ug/L	C U	UNFI	0.100	ug/L	C U
Aldrin	UNFI	0.050	ug/L	C U	UNFI	0.050	ug/L	C U	UNFI	0.050	ug/L	C U
Aroclor-1016	UNFI	1.000	ug/L	C U	UNFI	1.000	ug/L	C U	UNFI	1.000	ug/L	C U
Aroclor-1221	UNFI	2.000	ug/L	C U	UNFI	2.000	ug/L	C U	UNFI	2.000	ug/L	C U
Aroclor-1232	UNFI	1.000	ug/L	C U	UNFI	1.000	ug/L	C U	UNFI	1.000	ug/L	C U
Aroclor-1242	UNFI	1.000	ug/L	C U	UNFI	1.000	ug/L	C U	UNFI	1.000	ug/L	C U

TABLE E-12A
(Continued)

PHASE II - CHEMICAL PARAMETERS

BORING NUMBER		1047				2016				2047			
SAMPLE NUMBER		110892				111996				110894			
SAMPLING DATE		04/27/93				04/30/93				04/27/93			
CHEMICAL PARAMETERS	FLTD	RESULTS	UNITS	L	VQ	FLTD	RESULTS	UNITS	L	VQ	FLTD	RESULTS	UNITS	L	VQ
Pesticide Organics/PCBs															
Aroclor-1248	UNFI	1.000	ug/L	C	U	UNFI	1.000	ug/L	C	U	UNFI	1.000	ug/L	C	U
Aroclor-1254	UNFI	1.000	ug/L	C	U	UNFI	1.000	ug/L	C	U	UNFI	1.000	ug/L	C	U
Aroclor-1260	UNFI	1.000	ug/L	C	U	UNFI	1.000	ug/L	C	U	UNFI	1.000	ug/L	C	U
Dieldrin	UNFI	0.100	ug/L	C	U	UNFI	0.100	ug/L	C	U	UNFI	0.100	ug/L	C	U
Endosulfan II	UNFI	0.100	ug/L	C	U	UNFI	0.100	ug/L	C	U	UNFI	0.100	ug/L	C	U
Endosulfan sulfate	UNFI	0.100	ug/L	C	U	UNFI	0.100	ug/L	C	U	UNFI	0.100	ug/L	C	U
Endosulfan-I	UNFI	0.050	ug/L	C	U	UNFI	0.050	ug/L	C	U	UNFI	0.050	ug/L	C	U
Endrin	UNFI	0.100	ug/L	C	U	UNFI	0.100	ug/L	C	U	UNFI	0.100	ug/L	C	U
Endrin aldehyde	UNFI	0.100	ug/L	C	U	UNFI	0.100	ug/L	C	U	UNFI	0.100	ug/L	C	U
Endrin ketone	UNFI	0.100	ug/L	C	U	UNFI	0.100	ug/L	C	U	UNFI	0.100	ug/L	C	U
Heptachlor	UNFI	0.050	ug/L	C	U	UNFI	0.050	ug/L	C	U	UNFI	0.050	ug/L	C	U
Heptachlor epoxide	UNFI	0.050	ug/L	C	U	UNFI	0.050	ug/L	C	U	UNFI	0.050	ug/L	C	U
Methoxychlor	UNFI	0.500	ug/L	C	U	UNFI	0.500	ug/L	C	U	UNFI	0.500	ug/L	C	U
Toxaphene	UNFI	5.000	ug/L	C	U	UNFI	5.000	ug/L	C	U	UNFI	5.000	ug/L	C	U
alpha-BHC	UNFI	0.050	ug/L	C	U	UNFI	0.050	ug/L	C	UJ	UNFI	0.050	ug/L	C	U
alpha-Chlordane	UNFI	0.050	ug/L	C	U	UNFI	0.050	ug/L	C	U	UNFI	0.050	ug/L	C	U
beta-BHC	UNFI	0.050	ug/L	C	U	UNFI	0.050	ug/L	C	U	UNFI	0.050	ug/L	C	U
delta-BHC	UNFI	0.050	ug/L	C	U	UNFI	0.050	ug/L	C	UJ	UNFI	0.050	ug/L	C	U
gamma-BHC (Lindane)	UNFI	0.050	ug/L	C	U	UNFI	0.050	ug/L	C	UJ	UNFI	0.050	ug/L	C	U
gamma-Chlordane	UNFI	0.050	ug/L	C	U	UNFI	0.050	ug/L	C	U	UNFI	0.050	ug/L	C	U
General Chemistry															
Alkalinity	UNFI	360.000	mg/kg	B	-	UNFI	245.000	mg/L	B	-		NA			
Alkalinity as CaCO3		NA					NA				UNFI	224.000	mg/L	B	-
Ammonia	UNFI	0.100	mg/kg	B	U	UNFI	0.100	mg/L	B	U	UNFI	0.100	mg/L	B	U
Chloride	UNFI	3.850	mg/kg	B	-	UNFI	28.350	mg/L	B	-	UNFI	24.480	mg/L	B	-
Fluoride	UNFI	0.470	mg/kg	B	-	UNFI	0.200	mg/L	B	-	UNFI	0.200	mg/L	B	-
Nitrate	UNFI	0.100	mg/kg	B	R	UNFI	2.320	mg/L	B	R	UNFI	1.720	mg/L	B	J
Phenols	UNFI	0.010	mg/kg	B	U	UNFI	0.010	mg/L	B	U	UNFI	0.010	mg/L	B	U
Phosphorus	UNFI	0.640	mg/kg	B	-		NA				UNFI	0.020	mg/L	B	U
Sulfate	UNFI	166.900	mg/kg	B	-	UNFI	84.100	mg/L	B	-	UNFI	80.800	mg/L	B	-
Sulfide	UNFI	0.500	mg/kg	B	U	UNFI	0.500	mg/L	B	U	UNFI	0.500	mg/L	B	U
Total Kjeldahl Nitrogen	UNFI	0.410	mg/kg	B	-	UNFI	0.120	mg/L	B	-	UNFI	0.100	mg/L	B	U
Total Organic Carbon	UNFI	1.190	mg/kg	B	-	UNFI	1.120	mg/L	B	-	UNFI	1.000	mg/L	B	U
Total Organic Halides	UNFI	10.000	mg/kg	B	U	UNFI	0.010	mg/L	B	U	UNFI	0.010	mg/L	B	U
Total Organic Nitrogen	UNFI	0.410	mg/kg	B	-	UNFI	0.120	mg/L	B	-	UNFI	0.100	mg/L	B	U
Total Phosphorous		NA				UNFI	0.060	mg/L	B	-		NA			

TABLE E-12A
(Continued)

PHASE II - CHEMICAL PARAMETERS

BORING NUMBER	2402						2402						2955					
SAMPLE NUMBER	116225						116226						113801					
SAMPLING DATE	05/05/93						05/05/93						06/22/93					
CHEMICAL PARAMETERS	FLTD	RESULTS	UNITS	L	VQ		FLTD	RESULTS	UNITS	L	VQ		FLTD	RESULTS	UNITS	L	VQ	
Inorganics																		
Aluminum		NA					FILT	0.068	mg/L	C	U		FILT	0.122	mg/L	C	U	
Aluminum	UNFI	0.676	mg/L	C	-			NA					UNFI	0.173	mg/L	C	U	
Antimony		NA					FILT	0.004	mg/L	C	UJ		FILT	0.005	mg/L	C	U	
Antimony	UNFI	0.003	mg/L	C	UJ			NA					UNFI	0.005	mg/L	C	U	
Arsenic		NA					FILT	0.001	mg/L	C	U		FILT	0.002	mg/L	C	U	
Arsenic	UNFI	0.002	mg/L	C	-			NA					UNFI	0.002	mg/L	C	U	
Barium		NA					FILT	0.049	mg/L	C	-		FILT	0.046	mg/L	C	-	
Barium	UNFI	0.047	mg/L	C	-			NA					UNFI	0.046	mg/L	C	-	
Beryllium		NA					FILT	0.001	mg/L	C	U		FILT	0.002	mg/L	C	U	
Beryllium	UNFI	0.001	mg/L	C	U			NA					UNFI	0.002	mg/L	C	U	
Cadmium		NA					FILT	0.002	mg/L	C	U		FILT	0.005	mg/L	C	U	
Cadmium	UNFI	0.002	mg/L	C	U			NA					UNFI	0.005	mg/L	C	U	
Calcium		NA					FILT	83.700	mg/L	C	-		FILT	97.800	mg/L	C	-	
Calcium	UNFI	89.500	mg/L	C	-			NA					UNFI	98.400	mg/L	C	-	
Chromium		NA					FILT	0.004	mg/L	C	U		FILT	0.010	mg/L	C	U	
Chromium	UNFI	0.005	mg/L	C	-			NA					UNFI	0.010	mg/L	C	U	
Cobalt		NA					FILT	0.003	mg/L	C	U		FILT	0.010	mg/L	C	U	
Cobalt	UNFI	0.003	mg/L	C	U			NA					UNFI	0.010	mg/L	C	U	
Copper		NA					FILT	0.002	mg/L	C	U		FILT	0.010	mg/L	C	U	
Copper	UNFI	0.011	mg/L	C	U			NA					UNFI	0.010	mg/L	C	U	
Cyanide		NA					FILT	0.001	mg/L	C	R			NA				
Cyanide	UNFI	0.001	mg/L	C	U			NA					UNFI	0.002	mg/L	C	U	
Iron		NA					FILT	0.098	mg/L	C	U		FILT	0.020	mg/L	C	U	
Iron	UNFI	2.670	mg/L	C	-			NA					UNFI	0.206	mg/L	C	-	
Lead		NA					FILT	0.001	mg/L	C	U		FILT	0.002	mg/L	C	U	
Lead	UNFI	0.004	mg/L	C	-			NA					UNFI	0.002	mg/L	C	U	
Magnesium		NA					FILT	23.500	mg/L	C	-		FILT	25.500	mg/L	C	-	
Magnesium	UNFI	26.900	mg/L	C	-			NA					UNFI	25.700	mg/L	C	-	
Manganese		NA					FILT	0.005	mg/L	C	U		FILT	0.010	mg/L	C	U	
Manganese	UNFI	0.068	mg/L	C	-			NA					UNFI	0.010	mg/L	C	U	
Mercury		NA					FILT	0.000	mg/L	C	U		FILT	0.000	mg/L	C	U	
Mercury	UNFI	0.000	mg/L	C	U			NA					UNFI	0.000	mg/L	C	U	
Molybdenum		NA					FILT	0.003	mg/L	C	U		FILT	0.010	mg/L	C	U	
Molybdenum	UNFI	0.005	mg/L	C	U			NA					UNFI	0.010	mg/L	C	U	
Nickel		NA					FILT	0.003	mg/L	C	U		FILT	0.020	mg/L	C	U	
Nickel	UNFI	0.007	mg/L	C	-			NA					UNFI	0.020	mg/L	C	U	
Potassium		NA					FILT	2.750	mg/L	C	-		FILT	2.390	mg/L	C	-	
Potassium	UNFI	2.520	mg/L	C	-			NA					UNFI	2.260	mg/L	C	-	
Selenium		NA					FILT	0.001	mg/L	C	U		FILT	0.002	mg/L	C	UJ	
Selenium	UNFI	0.001	mg/L	C	U			NA					UNFI	0.002	mg/L	C	U	
Silicon		NA					FILT	3.300	mg/L	C	-		FILT	4.220	mg/L	C	-	
Silicon	UNFI	3.770	mg/L	C	-			NA					UNFI	4.300	mg/L	C	-	

TABLE E-12A
(Continued)

PHASE II - CHEMICAL PARAMETERS

BORING NUMBER		2402				2402				2955			
SAMPLE NUMBER		116225				116226				113801			
SAMPLING DATE		05/05/93				05/05/93				06/22/93			
CHEMICAL PARAMETERS	FLTD	RESULTS	UNITS	L	VQ	FLTD	RESULTS	UNITS	L	VQ	FLTD	RESULTS	UNITS	L	VQ
Inorganics															
Silver		NA				FILT	0.002	mg/L	C	U	FILT	0.010	mg/L	C	U
Silver	UNFI	0.002	mg/L	C	U		NA				UNFI	0.010	mg/L	C	U
Sodium		NA				FILT	11.400	mg/L	C	-	FILT	12.900	mg/L	C	-
Sodium	UNFI	8.970	mg/L	C	-		NA				UNFI	12.700	mg/L	C	-
Thallium		NA				FILT	0.001	mg/L	C	U	FILT	0.002	mg/L	C	U
Thallium	UNFI	0.001	mg/L	C	U		NA				UNFI	0.010	mg/L	C	U
Vanadium		NA				FILT	0.005	mg/L	C	U	FILT	0.010	mg/L	C	U
Vanadium	UNFI	0.010	mg/L	C	U		NA				UNFI	0.010	mg/L	C	U
Zinc		NA				FILT	0.005	mg/L	C	U	FILT	0.005	mg/L	C	U
Zinc	UNFI	0.041	mg/L	C	-		NA				UNFI	0.007	mg/L	C	-
Volatile Organics															
1,1,1-Trichloroethane	UNFI	10.000	ug/L	C	U		NA				UNFI	1.000	ug/L	C	J
1,1,2,2-Tetrachloroethane	UNFI	10.000	ug/L	C	U		NA				UNFI	10.000	ug/L	C	U
1,1,2-Trichloroethane	UNFI	10.000	ug/L	C	U		NA				UNFI	10.000	ug/L	C	U
1,1-Dichloroethane	UNFI	10.000	ug/L	C	UJ		NA				UNFI	10.000	ug/L	C	U
1,1-Dichloroethene	UNFI	10.000	ug/L	C	U		NA				UNFI	10.000	ug/L	C	U
1,2-Dichloroethane	UNFI	10.000	ug/L	C	U		NA				UNFI	10.000	ug/L	C	U
1,2-Dichloroethene	UNFI	10.000	ug/L	C	U		NA				UNFI	10.000	ug/L	C	U
1,2-Dichloropropane	UNFI	10.000	ug/L	C	U		NA				UNFI	10.000	ug/L	C	U
2-Butanone	UNFI	10.000	ug/L	C	UJ		NA				UNFI	10.000	ug/L	C	U
2-Hexanone	UNFI	10.000	ug/L	C	U		NA				UNFI	10.000	ug/L	C	U
4-Methyl-2-pentanone	UNFI	10.000	ug/L	C	U		NA				UNFI	10.000	ug/L	C	U
Acetone	UNFI	3.000	ug/L	C	R		NA				UNFI	10.000	ug/L	C	U
Benzene	UNFI	10.000	ug/L	C	U		NA				UNFI	10.000	ug/L	C	U
Bromodichloromethane	UNFI	10.000	ug/L	C	U		NA				UNFI	10.000	ug/L	C	U
Bromoform	UNFI	10.000	ug/L	C	U		NA				UNFI	10.000	ug/L	C	U
Bromomethane	UNFI	10.000	ug/L	C	U		NA				UNFI	10.000	ug/L	C	U
Carbon Tetrachloride	UNFI	10.000	ug/L	C	U		NA				UNFI	10.000	ug/L	C	U
Carbon disulfide	UNFI	26.000	ug/L	C	J		NA				UNFI	10.000	ug/L	C	U
Chlorobenzene	UNFI	10.000	ug/L	C	U		NA				UNFI	10.000	ug/L	C	U
Chloroethane	UNFI	10.000	ug/L	C	UJ		NA				UNFI	10.000	ug/L	C	U
Chloroform	UNFI	10.000	ug/L	C	U		NA				UNFI	10.000	ug/L	C	U
Chloromethane	UNFI	10.000	ug/L	C	R		NA				UNFI	10.000	ug/L	C	U
Dibromochloromethane	UNFI	10.000	ug/L	C	U		NA				UNFI	10.000	ug/L	C	U
Ethylbenzene	UNFI	10.000	ug/L	C	U		NA				UNFI	10.000	ug/L	C	U
Methylene chloride	UNFI	10.000	ug/L	C	UJ		NA				UNFI	16.000	ug/L	C	U
Styrene	UNFI	10.000	ug/L	C	U		NA				UNFI	10.000	ug/L	C	U
Tetrachloroethene	UNFI	10.000	ug/L	C	U		NA				UNFI	10.000	ug/L	C	U
Toluene	UNFI	10.000	ug/L	C	U		NA				UNFI	10.000	ug/L	C	U
Trichloroethene	UNFI	10.000	ug/L	C	U		NA				UNFI	10.000	ug/L	C	U

TABLE E-12A
(Continued)

PHASE II - CHEMICAL PARAMETERS

BORING NUMBER	2402				2402				2955			
SAMPLE NUMBER	116225				116226				113801			
SAMPLING DATE	05/05/93				05/05/93				06/22/93			
CHEMICAL PARAMETERS	FLTD	RESULTS	UNITS	L VQ	FLTD	RESULTS	UNITS	L VQ	FLTD	RESULTS	UNITS	L VQ
Volatile Organics												
Vinyl Acetate	UNFI	10.000	ug/L	C UJ		NA				NA		
Vinyl chloride	UNFI	10.000	ug/L	C UJ		NA			UNFI	10.000	ug/L	C U
Xylenes, Total	UNFI	10.000	ug/L	C U		NA			UNFI	10.000	ug/L	C U
cis-1,3-Dichloropropene	UNFI	10.000	ug/L	C U		NA			UNFI	10.000	ug/L	C U
trans-1,3-Dichloropropene	UNFI	10.000	ug/L	C U		NA			UNFI	10.000	ug/L	C U
Semivolatile Organics												
1,2,4-Trichlorobenzene	UNFI	10.000	ug/L	C U		NA			UNFI	10.000	ug/L	C U
1,2-Dichlorobenzene	UNFI	10.000	ug/L	C U		NA			UNFI	10.000	ug/L	C U
1,3-Dichlorobenzene	UNFI	10.000	ug/L	C U		NA			UNFI	10.000	ug/L	C U
1,4-Dichlorobenzene	UNFI	10.000	ug/L	C U		NA			UNFI	10.000	ug/L	C U
2,4,5-Trichlorophenol	UNFI	25.000	ug/L	C U		NA			UNFI	25.000	ug/L	C U
2,4,6-Trichlorophenol	UNFI	10.000	ug/L	C U		NA			UNFI	10.000	ug/L	C U
2,4-Dichlorophenol	UNFI	10.000	ug/L	C U		NA			UNFI	10.000	ug/L	C U
2,4-Dimethylphenol	UNFI	10.000	ug/L	C U		NA			UNFI	10.000	ug/L	C U
2,4-Dinitrophenol	UNFI	25.000	ug/L	C R		NA			UNFI	50.000	ug/L	C U
2,4-Dinitrotoluene	UNFI	10.000	ug/L	C U		NA			UNFI	10.000	ug/L	C U
2,6-Dinitrotoluene	UNFI	10.000	ug/L	C U		NA			UNFI	10.000	ug/L	C U
2-Benzyl-4-chlorophenol		NA				NA			UNFI	10.000	ug/L	C U
2-Chloronaphthalene	UNFI	10.000	ug/L	C U		NA			UNFI	10.000	ug/L	C U
2-Chlorophenol	UNFI	10.000	ug/L	C U		NA			UNFI	10.000	ug/L	C U
2-Methylnaphthalene	UNFI	10.000	ug/L	C U		NA			UNFI	10.000	ug/L	C U
2-Methylphenol	UNFI	10.000	ug/L	C U		NA			UNFI	10.000	ug/L	C U
2-Nitroaniline	UNFI	25.000	ug/L	C U		NA			UNFI	25.000	ug/L	C U
2-Nitrophenol	UNFI	10.000	ug/L	C U		NA			UNFI	10.000	ug/L	C U
3,3'-Dichlorobenzidine	UNFI	10.000	ug/L	C U		NA			UNFI	10.000	ug/L	C U
3-Nitroaniline	UNFI	25.000	ug/L	C U		NA			UNFI	25.000	ug/L	C U
4,6-Dinitro-2-methylphenol	UNFI	25.000	ug/L	C UJ		NA			UNFI	25.000	ug/L	C U
4-Bromophenyl phenyl ether	UNFI	10.000	ug/L	C U		NA			UNFI	10.000	ug/L	C U
4-Chloro-3-methylphenol	UNFI	10.000	ug/L	C U		NA			UNFI	10.000	ug/L	C U
4-Chlorophenylphenyl ether	UNFI	10.000	ug/L	C U		NA			UNFI	10.000	ug/L	C U
4-Methylphenol	UNFI	10.000	ug/L	C U		NA			UNFI	10.000	ug/L	C U
4-Nitroaniline	UNFI	25.000	ug/L	C U		NA			UNFI	25.000	ug/L	C U
4-Nitrophenol	UNFI	25.000	ug/L	C UJ		NA			UNFI	25.000	ug/L	C U
Acenaphthene	UNFI	10.000	ug/L	C U		NA			UNFI	10.000	ug/L	C U
Acenaphthylene	UNFI	10.000	ug/L	C U		NA			UNFI	10.000	ug/L	C U
Anthracene	UNFI	10.000	ug/L	C U		NA			UNFI	10.000	ug/L	C U
Benzo(a)anthracene	UNFI	10.000	ug/L	C U		NA			UNFI	10.000	ug/L	C U
Benzo(a)pyrene	UNFI	10.000	ug/L	C U		NA			UNFI	10.000	ug/L	C U
Benzo(b)fluoranthene	UNFI	10.000	ug/L	C U		NA			UNFI	10.000	ug/L	C U
Benzo(g,h,i)perylene	UNFI	10.000	ug/L	C U		NA			UNFI	10.000	ug/L	C U

TABLE E-12A
(Continued)

PHASE II - CHEMICAL PARAMETERS

BORING NUMBER		2402					2402					2955				
SAMPLE NUMBER		116225					116226					113801				
SAMPLING DATE		05/05/93					05/05/93					06/22/93				
CHEMICAL PARAMETERS	FLTD	RESULTS	UNITS	L	VQ		FLTD	RESULTS	UNITS	L	VQ	FLTD	RESULTS	UNITS	L	VQ
Semivolatile Organics																
Benzo(k)fluoranthene	UNFI	10.000	ug/L	C	U			NA				UNFI	10.000	ug/L	C	U
Benzoic acid	UNFI	50.000	ug/L	C	R			NA				UNFI	50.000	ug/L	C	U
Benzyl alcohol	UNFI	10.000	ug/L	C	UJ			NA				UNFI	10.000	ug/L	C	U
Butyl benzyl phthalate	UNFI	10.000	ug/L	C	U			NA				UNFI	1.000	ug/L	C	J
Carbazole	UNFI	10.000	ug/L	C	U			NA				UNFI	10.000	ug/L	C	U
Chrysene	UNFI	10.000	ug/L	C	U			NA				UNFI	10.000	ug/L	C	U
Di-n-butyl phthalate	UNFI	10.000	ug/L	C	U			NA				UNFI	10.000	ug/L	C	U
Di-n-octyl phthalate	UNFI	10.000	ug/L	C	R			NA				UNFI	10.000	ug/L	C	U
Dibenzo(a,h)anthracene	UNFI	10.000	ug/L	C	UJ			NA				UNFI	10.000	ug/L	C	U
Dibenzofuran	UNFI	10.000	ug/L	C	U			NA				UNFI	10.000	ug/L	C	U
Diethyl phthalate	UNFI	10.000	ug/L	C	U			NA				UNFI	10.000	ug/L	C	U
Dimethyl phthalate	UNFI	10.000	ug/L	C	U			NA				UNFI	10.000	ug/L	C	U
Fluoranthene	UNFI	10.000	ug/L	C	U			NA				UNFI	10.000	ug/L	C	U
Fluorene	UNFI	10.000	ug/L	C	U			NA				UNFI	10.000	ug/L	C	U
Hexachlorobenzene	UNFI	10.000	ug/L	C	U			NA				UNFI	10.000	ug/L	C	U
Hexachlorobutadiene	UNFI	10.000	ug/L	C	U			NA				UNFI	10.000	ug/L	C	U
Hexachlorocyclopentadiene	UNFI	10.000	ug/L	C	U			NA				UNFI	10.000	ug/L	C	U
Hexachloroethane	UNFI	10.000	ug/L	C	U			NA				UNFI	10.000	ug/L	C	U
Indeno(1,2,3-cd)pyrene	UNFI	10.000	ug/L	C	U			NA				UNFI	10.000	ug/L	C	UJ
Isophorone	UNFI	10.000	ug/L	C	U			NA				UNFI	10.000	ug/L	C	U
N-Nitroso-di-n-propylamine	UNFI	10.000	ug/L	C	U			NA				UNFI	10.000	ug/L	C	U
N-Nitrosodimethylamine		NA						NA				UNFI	10.000	ug/L	C	U
N-Nitrosodiphenylamine	UNFI	10.000	ug/L	C	U			NA				UNFI	10.000	ug/L	C	U
Naphthalene	UNFI	10.000	ug/L	C	U			NA				UNFI	10.000	ug/L	C	U
Nitrobenzene	UNFI	10.000	ug/L	C	U			NA				UNFI	10.000	ug/L	C	U
Pentachlorophenol	UNFI	25.000	ug/L	C	U			NA				UNFI	25.000	ug/L	C	UJ
Phenanthrene	UNFI	10.000	ug/L	C	U			NA				UNFI	10.000	ug/L	C	U
Phenol	UNFI	10.000	ug/L	C	U			NA				UNFI	10.000	ug/L	C	U
Pyrene	UNFI	10.000	ug/L	C	U			NA				UNFI	10.000	ug/L	C	U
Tributyl phosphate		NA						NA				UNFI	10.000	ug/L	C	U
bis(2-Chloroethoxy)methane	UNFI	10.000	ug/L	C	U			NA				UNFI	10.000	ug/L	C	U
bis(2-Chloroethyl)ether	UNFI	10.000	ug/L	C	U			NA				UNFI	10.000	ug/L	C	U
bis(2-Chloroisopropyl) ether	UNFI	10.000	ug/L	C	U			NA				UNFI	10.000	ug/L	C	U
bis(2-Ethylhexyl) phthalate	UNFI	10.000	ug/L	C	UJ			NA				UNFI	10.000	ug/L	C	U
p-Chloroaniline	UNFI	10.000	ug/L	C	U			NA				UNFI	10.000	ug/L	C	U
Pesticide Organics/PCBs																
4,4'-DDD	UNFI	0.100	ug/L	C	U			NA				UNFI	0.100	ug/L	C	U
4,4'-DDE	UNFI	0.100	ug/L	C	U			NA				UNFI	0.100	ug/L	C	U
4,4'-DDT	UNFI	0.100	ug/L	C	UJ			NA				UNFI	0.100	ug/L	C	U
Aldrin	UNFI	0.050	ug/L	C	U			NA				UNFI	0.050	ug/L	C	U

5174

TABLE E-12A
(Continued)

PHASE II - CHEMICAL PARAMETERS

BORING NUMBER		2402				2402				2955			
SAMPLE NUMBER		116225				116226				113801			
SAMPLING DATE		05/05/93				05/05/93				06/22/93			
CHEMICAL PARAMETERS	FLTD	RESULTS	UNITS	L	VQ	FLTD	RESULTS	UNITS	L VQ	FLTD	RESULTS	UNITS	L VQ
Pesticide Organics/PCBs													
Aroclor-1016	UNFI	1.000	ug/L	C	U		NA			UNFI	1.000	ug/L	C U
Aroclor-1221	UNFI	2.000	ug/L	C	U		NA			UNFI	2.000	ug/L	C U
Aroclor-1232	UNFI	1.000	ug/L	C	U		NA			UNFI	1.000	ug/L	C U
Aroclor-1242	UNFI	1.000	ug/L	C	U		NA			UNFI	1.000	ug/L	C U
Aroclor-1248	UNFI	1.000	ug/L	C	U		NA			UNFI	1.000	ug/L	C U
Aroclor-1254	UNFI	1.000	ug/L	C	U		NA			UNFI	1.000	ug/L	C U
Aroclor-1260	UNFI	1.000	ug/L	C	U		NA			UNFI	1.000	ug/L	C U
Dieldrin	UNFI	0.100	ug/L	C	U		NA			UNFI	0.100	ug/L	C U
Endosulfan II	UNFI	0.100	ug/L	C	U		NA			UNFI	0.100	ug/L	C U
Endosulfan sulfate	UNFI	0.100	ug/L	C	U		NA			UNFI	0.100	ug/L	C U
Endosulfan-I	UNFI	0.050	ug/L	C	U		NA			UNFI	0.050	ug/L	C U
Endrin	UNFI	0.100	ug/L	C	U		NA			UNFI	0.100	ug/L	C U
Endrin aldehyde	UNFI	0.100	ug/L	C	U		NA			UNFI	0.100	ug/L	C UJ
Endrin ketone	UNFI	0.100	ug/L	C	U		NA			UNFI	0.100	ug/L	C U
Heptachlor	UNFI	0.050	ug/L	C	U		NA			UNFI	0.050	ug/L	C U
Heptachlor epoxide	UNFI	0.050	ug/L	C	U		NA			UNFI	0.050	ug/L	C U
Methoxychlor	UNFI	0.500	ug/L	C	U		NA			UNFI	0.500	ug/L	C U
Toxaphene	UNFI	5.000	ug/L	C	U		NA			UNFI	5.000	ug/L	C U
alpha-BHC	UNFI	0.050	ug/L	C	UJ		NA			UNFI	0.050	ug/L	C U
alpha-Chlordane	UNFI	0.050	ug/L	C	U		NA			UNFI	0.050	ug/L	C U
beta-BHC	UNFI	0.050	ug/L	C	U		NA			UNFI	0.050	ug/L	C U
delta-BHC	UNFI	0.050	ug/L	C	UJ		NA			UNFI	0.050	ug/L	C U
gamma-BHC (Lindane)	UNFI	0.050	ug/L	C	UJ		NA			UNFI	0.050	ug/L	C U
gamma-Chlordane	UNFI	0.050	ug/L	C	U		NA			UNFI	0.050	ug/L	C U
General Chemistry													
Alkalinity	UNFI	209.900	mg/L	B	-		NA			UNFI	258.000	mg/L	B -
Ammonia	UNFI	0.100	mg/L	B	U		NA			UNFI	0.100	mg/L	B U
Chloride	UNFI	20.280	mg/L	B	-		NA			UNFI	29.100	mg/L	B -
Fluoride	UNFI	0.280	mg/L	B	-		NA			UNFI	0.220	mg/L	B -
Nitrate	UNFI	2.460	mg/L	B	J		NA			UNFI	2.290	mg/L	B J
Phenols	UNFI	0.010	mg/L	B	U		NA			UNFI	0.010	mg/L	B U
Sulfate	UNFI	68.500	mg/L	B	-		NA			UNFI	72.700	mg/L	B -
Sulfide	UNFI	0.500	mg/L	B	U		NA			UNFI	0.500	mg/L	B U
Total Kjeldahl Nitrogen	UNFI	3.010	mg/L	B	-		NA			UNFI	0.120	mg/L	B -
Total Organic Carbon	UNFI	1.000	mg/L	B	U		NA			UNFI	1.000	mg/L	B U
Total Organic Halides	UNFI	0.011	mg/L	B	J		NA			UNFI	0.010	mg/L	B R
Total Organic Nitrogen	UNFI	2.900	mg/L	B	-		NA			UNFI	0.120	mg/L	B -
Total Phosphorous	UNFI	0.140	mg/L	B	-		NA			UNFI	0.020	mg/L	B U

0257

TABLE E-12B
INACTIVE FLYASH PILE
TENTATIVELY IDENTIFIED COMPOUNDS
WATER

5174

Sample Number	Sample Location	Media	Parameter	Result	Units
110346	RINSATE	SW	1,2-benzenedicarboxylic acid	3	ug/L
110422	TRIP BLANK	TB	1,2-benzenedicarboxylic acid	3	ug/L
111820	SW-04	SW	2-hexenal, (E)-	7	ug/L
110892	1047	GW	benzene, 1,1-sulfonylbis[4-	5	ug/L
110892	1047	GW	acetic acid, (triphenylphosp	15	ug/L
113801	2955	GW	silanol, trimethyl-	5	ug/L
113801	2955	GW	ethene, 1,1'-oxybis-	4	ug/L

TB - trip blank
SW - surface water
GW - groundwater

TABLE E-13

INACTIVE FLYASH PILE
RI/FS TCLP SAMPLES
OPERABLE UNIT 2 REMEDIAL INVESTIGATION
FERNALD ENVIRONMENTAL MANAGEMENT PROJECT

PHASE I - CHEMICAL PARAMETERS

BORING NUMBER	1708				1708				1708			
SAMPLE NUMBER	067115				067118				067099 12-13.5			
SAMPLING DATE	06/17/91				06/17/91				06/16/91			
CHEMICAL PARAMETERS	RESULTS	UNITS	L	VQ	RESULTS	UNITS	L	VQ	RESULTS	UNITS	L	VQ
Inorganics												
Arsenic	0.099	mg/L	C	-	0.050	mg/L	C	UJ	0.075	mg/L	C	J
Barium	1.279	mg/L	C	J	0.156	mg/L	C	JB	1.907	mg/L	C	-
Cadmium	0.007	mg/L	C	J	0.014	mg/L	C	JB	0.012	mg/L	C	J
Chromium	0.088	mg/L	C	-	0.084	mg/L	C	JB	0.069	mg/L	C	-
Cyanide	NA				0.123	mg/kg	C	-	NA			
Lead	0.083	mg/L	C	-	0.098	mg/L	C	JB	0.099	mg/L	C	-
Mercury	0.000	mg/L	C	U	0.000	mg/L	C	U	0.000	mg/L	C	U
Selenium	0.187	mg/L	C	-	0.112	mg/L	C	JB	0.182	mg/L	C	-
Silver	0.075	mg/L	C	-	0.073	mg/L	C	JB	0.053	mg/L	C	-
Volatile Organics												
1,1-Dichloroethene	5.000	ug/L	C	U	NA				NA			
1,2-Dichloroethane	5.000	ug/L	C	U	NA				NA			
2-Butanone	2.000	ug/L	C	J	NA				NA			
Benzene	5.000	ug/L	C	U	NA				NA			
Carbon Tetrachloride	5.000	ug/L	C	U	NA				NA			
Chlorobenzene	5.000	ug/L	C	U	NA				NA			
Chloroform	5.000	ug/L	C	U	NA				NA			
Pyridine	20.000	ug/L	C	R	NA				20.000	ug/L	C	U
Tetrachloroethene	5.000	ug/L	C	U	NA				NA			
Trichloroethene	5.000	ug/L	C	U	NA				NA			
Vinyl chloride	10.000	ug/L	C	U	NA				NA			
Semivolatile Organics												
1,4-Dichlorobenzene	20.000	ug/L	C	R	NA				20.000	ug/L	C	U
2,4,5-Trichlorophenol	100.000	ug/L	C	R	NA				100.000	ug/L	C	U
2,4,6-Trichlorophenol	20.000	ug/L	C	R	NA				20.000	ug/L	C	U
2,4-Dinitrotoluene	20.000	ug/L	C	R	NA				20.000	ug/L	C	U
2-Methylphenol	20.000	ug/L	C	R	NA				20.000	ug/L	C	U
3-Methylphenol	20.000	ug/L	C	R	NA				20.000	ug/L	C	U
4-Methylphenol	20.000	ug/L	C	R	NA				20.000	ug/L	C	U
Hexachlorobenzene	20.000	ug/L	C	R	NA				20.000	ug/L	C	U
Hexachlorobutadiene	20.000	ug/L	C	R	NA				20.000	ug/L	C	U
Hexachloroethane	20.000	ug/L	C	R	NA				20.000	ug/L	C	U
Nitrobenzene	20.000	ug/L	C	R	NA				20.000	ug/L	C	U
Pentachlorophenol	100.000	ug/L	C	R	NA				100.000	ug/L	C	U
Herbicide Organics												
2,4,5-TP (Silvex)	1.800	ug/L	C	U	NA				2.100	ug/L	C	U

TABLE E-13
(Continued)

PHASE I - CHEMICAL PARAMETERS

BORING NUMBER	1708				1708				1708			
SAMPLE NUMBER	067115				067118				067099			
									12-13.5			
SAMPLING DATE	06/17/91				06/17/91				06/16/91			
CHEMICAL PARAMETERS	RESULTS	UNITS	L	VQ	RESULTS	UNITS	L	VQ	RESULTS	UNITS	L	VQ
Herbicide Organics												
2,4-D	10.000	ug/L	C	U	NA				11.000	ug/L	C	U
Pesticide Organics/PCBs												
Endrin	0.100	ug/L	C	U	NA				0.100	ug/L	C	U
Heptachlor	0.050	ug/L	C	U	NA				0.050	ug/L	C	U
Heptachlor epoxide	0.050	ug/L	C	U	NA				0.050	ug/L	C	U
Methoxychlor	0.500	ug/L	C	U	NA				0.500	ug/L	C	U
Toxaphene	1.000	ug/L	C	U	NA				1.000	ug/L	C	U
alpha-Chlordane	0.500	ug/L	C	U	NA				0.500	ug/L	C	U
gamma-BHC (Lindane)	0.050	ug/L	C	U	NA				0.050	ug/L	C	U
gamma-Chlordane	0.500	ug/L	C	U	NA				0.500	ug/L	C	U
General Chemistry												
Sulfide	NA				12.000	mg/kg	C	U	NA			
pH	NA				7.270	stand	C	-	NA			

TABLE E-13
(Continued)

PHASE I - CHEMICAL PARAMETERS

BORING NUMBER	1709				1710				1710			
SAMPLE NUMBER	067065				067051				067038			
	9-10.5								16.5-18			
SAMPLING DATE	06/06/91				06/01/91				06/01/91			
CHEMICAL PARAMETERS	RESULTS	UNITS	L	VQ	RESULTS	UNITS	L	VQ	RESULTS	UNITS	L	VQ
Inorganics												
Arsenic	0.081	mg/L	C	-	0.144	mg/L	C	JB	0.104	mg/L	C	JB
Barium	1.609	mg/L	C	-	1.444	mg/L	C	JB	1.858	mg/L	C	JB
Cadmium	0.002	mg/L	C	U	0.004	mg/L	C	JB	0.002	mg/L	C	JB
Chromium	0.010	mg/L	C	U	0.020	mg/L	C	U	0.010	mg/L	C	U
Lead	0.040	mg/L	C	U	0.080	mg/L	C	U	0.040	mg/L	C	U
Mercury	0.000	mg/L	C	U	0.000	mg/L	C	U	0.000	mg/L	C	U
Selenium	0.090	mg/L	C	-	0.160	mg/L	C	U	0.132	mg/L	C	JB
Silver	0.010	mg/L	C	U	0.038	mg/L	C	JB	0.010	mg/L	C	U
Volatile Organics												
1,1-Dichloroethene	5.000	ug/L	C	U	5.000	ug/L	C	U	5.000	ug/L	C	U
1,2-Dichloroethane	5.000	ug/L	C	U	5.000	ug/L	C	U	5.000	ug/L	C	U
2-Butanone	10.000	ug/L	C	U	4.000	ug/L	C	J	10.000	ug/L	C	U
Benzene	5.000	ug/L	C	U	5.000	ug/L	C	U	5.000	ug/L	C	U
Carbon Tetrachloride	5.000	ug/L	C	U	5.000	ug/L	C	U	5.000	ug/L	C	U
Chlorobenzene	5.000	ug/L	C	U	5.000	ug/L	C	U	5.000	ug/L	C	U
Chloroform	5.000	ug/L	C	U	5.000	ug/L	C	U	5.000	ug/L	C	U
Pyridine	20.000	ug/L	C	U	20.000	ug/L	C	U	20.000	ug/L	C	U
Tetrachloroethene	5.000	ug/L	C	U	5.000	ug/L	C	U	5.000	ug/L	C	U
Trichloroethene	5.000	ug/L	C	U	5.000	ug/L	C	U	5.000	ug/L	C	U
Vinyl chloride	10.000	ug/L	C	U	10.000	ug/L	C	U	10.000	ug/L	C	U
Semivolatile Organics												
1,4-Dichlorobenzene	20.000	ug/L	C	U	20.000	ug/L	C	U	20.000	ug/L	C	U
2,4,5-Trichlorophenol	100.000	ug/L	C	U	100.000	ug/L	C	U	100.000	ug/L	C	U
2,4,6-Trichlorophenol	20.000	ug/L	C	U	20.000	ug/L	C	U	20.000	ug/L	C	U
2,4-Dinitrotoluene	20.000	ug/L	C	U	20.000	ug/L	C	U	20.000	ug/L	C	U
2-Methylphenol	20.000	ug/L	C	U	20.000	ug/L	C	U	20.000	ug/L	C	U
3-Methylphenol	20.000	ug/L	C	U	20.000	ug/L	C	U	20.000	ug/L	C	U
4-Methylphenol	20.000	ug/L	C	U	20.000	ug/L	C	U	20.000	ug/L	C	U
Hexachlorobenzene	20.000	ug/L	C	U	20.000	ug/L	C	U	20.000	ug/L	C	U
Hexachlorobutadiene	20.000	ug/L	C	U	20.000	ug/L	C	U	20.000	ug/L	C	U
Hexachloroethane	20.000	ug/L	C	U	20.000	ug/L	C	U	20.000	ug/L	C	U
Nitrobenzene	20.000	ug/L	C	U	20.000	ug/L	C	U	20.000	ug/L	C	U
Pentachlorophenol	8.000	ug/L	C	J	100.000	ug/L	C	U	100.000	ug/L	C	U
Herbicide Organics												
2,4,5-TP (Silvex)	1.800	ug/L	C	U	1.800	ug/L	C	U	1.800	ug/L	C	U
2,4-D	12.000	ug/L	C	U	12.000	ug/L	C	U	12.000	ug/L	C	U

0261

5174

TABLE E-13
(Continued)

PHASE I - CHEMICAL PARAMETERS

BORING NUMBER	1709				1710				1710			
SAMPLE NUMBER	067065				067051				067038			
	9-10.5								16.5-18			
SAMPLING DATE	06/06/91				06/01/91				06/01/91			
CHEMICAL PARAMETERS	RESULTS	UNITS	L	VQ	RESULTS	UNITS	L	VQ	RESULTS	UNITS	L	VQ
Pesticide Organics/PCBs												
Endrin	0.100	ug/L	C	U	0.100	ug/L	C	U	0.100	ug/L	C	U
Heptachlor	0.050	ug/L	C	U	0.050	ug/L	C	U	0.050	ug/L	C	U
Heptachlor epoxide	0.050	ug/L	C	U	0.050	ug/L	C	U	0.050	ug/L	C	U
Methoxychlor	0.500	ug/L	C	U	0.500	ug/L	C	U	0.500	ug/L	C	U
Toxaphene	1.000	ug/L	C	U	1.000	ug/L	C	U	1.000	ug/L	C	U
alpha-Chlordane	0.500	ug/L	C	U	0.500	ug/L	C	U	0.500	ug/L	C	U
gamma-BHC (Lindane)	0.050	ug/L	C	U	0.050	ug/L	C	U	0.050	ug/L	C	U
gamma-Chlordane	0.500	ug/L	C	U	0.500	ug/L	C	U	0.500	ug/L	C	U

TABLE E-13
(Continued)

PHASE I - CHEMICAL PARAMETERS

BORING NUMBER	1710				1711				1711			
SAMPLE NUMBER	067039				067021				067016			
	16.5-18								10.5-12			
SAMPLING DATE	06/01/91				05/29/91				05/29/91			
CHEMICAL PARAMETERS	RESULTS	UNITS	L	VQ	RESULTS	UNITS	L	VQ	RESULTS	UNITS	L	VQ
Inorganics												
Arsenic	0.050	mg/L	C	U	0.448	mg/L	C	JB	0.050	mg/L	C	U
Barium	0.334	mg/L	C	-	0.286	mg/L	C	JB	0.592	mg/L	C	JB
Cadmium	0.002	mg/L	C	U	0.002	mg/L	C	U	0.002	mg/L	C	U
Chromium	0.010	mg/L	C	U	0.010	mg/L	C	U	0.010	mg/L	C	U
Lead	0.040	mg/L	C	U	0.049	mg/L	C	JB	0.041	mg/L	C	JB
Mercury	0.000	mg/L	C	U	0.001	mg/L	C	-	0.000	mg/L	C	U
Selenium	0.080	mg/L	C	U	0.105	mg/L	C	JB	0.080	mg/L	C	-
Silver	0.010	mg/L	C	U	0.010	mg/L	C	U	0.010	mg/L	C	U
Volatile Organics												
1,1-Dichloroethene	NA				5.000	ug/L	C	U	5.000	ug/L	C	U
1,2-Dichloroethane	NA				5.000	ug/L	C	U	5.000	ug/L	C	U
2-Butanone	NA				10.000	ug/L	C	U	10.000	ug/L	C	U
Benzene	NA				5.000	ug/L	C	U	5.000	ug/L	C	U
Carbon Tetrachloride	NA				5.000	ug/L	C	U	5.000	ug/L	C	U
Chlorobenzene	NA				5.000	ug/L	C	U	5.000	ug/L	C	U
Chloroform	NA				5.000	ug/L	C	U	5.000	ug/L	C	U
Pyridine	NA				20.000	ug/L	C	U	20.000	ug/L	C	U
Tetrachloroethene	NA				5.000	ug/L	C	U	5.000	ug/L	C	U
Trichloroethene	NA				5.000	ug/L	C	U	5.000	ug/L	C	U
Vinyl chloride	NA				10.000	ug/L	C	U	10.000	ug/L	C	U
Semivolatile Organics												
1,4-Dichlorobenzene	NA				20.000	ug/L	C	U	20.000	ug/L	C	U
2,4,5-Trichlorophenol	NA				100.000	ug/L	C	U	100.000	ug/L	C	U
2,4,6-Trichlorophenol	NA				20.000	ug/L	C	U	20.000	ug/L	C	U
2,4-Dinitrotoluene	NA				20.000	ug/L	C	U	20.000	ug/L	C	U
2-Methylphenol	NA				20.000	ug/L	C	U	20.000	ug/L	C	U
3-Methylphenol	NA				20.000	ug/L	C	U	20.000	ug/L	C	U
4-Methylphenol	NA				20.000	ug/L	C	U	20.000	ug/L	C	U
Hexachlorobenzene	NA				20.000	ug/L	C	U	20.000	ug/L	C	U
Hexachlorobutadiene	NA				20.000	ug/L	C	U	20.000	ug/L	C	U
Hexachloroethane	NA				20.000	ug/L	C	U	20.000	ug/L	C	U
Nitrobenzene	NA				20.000	ug/L	C	U	20.000	ug/L	C	U
Pentachlorophenol	NA				100.000	ug/L	C	U	100.000	ug/L	C	U
Herbicide Organics												
2,4,5-TP (Silvex)	1.800	ug/L	C	U	1.800	ug/L	C	U	1.800	ug/L	C	U
2,4-D	12.000	ug/L	C	U	12.000	ug/L	C	U	12.000	ug/L	C	U

0263

FEMP-OU02-4 DRAFT
February 18, 1994
5174

TABLE E-13
(Continued)

PHASE I - CHEMICAL PARAMETERS

BORING NUMBER	1710				1711				1711			
SAMPLE NUMBER	067039 16.5-18				067021				067016 10.5-12			
SAMPLING DATE	06/01/91				05/29/91				05/29/91			
CHEMICAL PARAMETERS	RESULTS	UNITS	L	VQ	RESULTS	UNITS	L	VQ	RESULTS	UNITS	L	VQ
Pesticide Organics/PCBs												
Endrin	0.100	ug/L	C	U	0.100	ug/L	C	U	0.100	ug/L	C	U
Heptachlor	0.050	ug/L	C	U	0.050	ug/L	C	U	0.050	ug/L	C	U
Heptachlor epoxide	0.050	ug/L	C	U	0.050	ug/L	C	U	0.050	ug/L	C	U
Methoxychlor	0.500	ug/L	C	U	0.500	ug/L	C	U	0.500	ug/L	C	U
Toxaphene	1.000	ug/L	C	U	1.000	ug/L	C	U	1.000	ug/L	C	U
alpha-Chlordane	0.500	ug/L	C	U	0.500	ug/L	C	U	0.500	ug/L	C	U
gamma-BHC (Lindane)	0.050	ug/L	C	U	0.050	ug/L	C	U	0.050	ug/L	C	U
gamma-Chlordane	0.500	ug/L	C	U	0.500	ug/L	C	U	0.500	ug/L	C	U

TABLE E-13
(Continued)

PHASE I - CHEMICAL PARAMETERS

BORING NUMBER	1711				1791				1791			
SAMPLE NUMBER	067017				067124				067125			
	10.5-12											
SAMPLING DATE	05/29/91				06/25/91				06/25/91			
CHEMICAL PARAMETERS	RESULTS	UNITS	L	VQ	RESULTS	UNITS	L	VQ	RESULTS	UNITS	L	VQ
Inorganics												
Arsenic	0.050	mg/L	C	U	0.250	mg/L	C	U	NA			
Barium	0.328	mg/L	C	-	2.152	mg/L	C	-	NA			
Cadmium	0.002	mg/L	C	U	0.017	mg/L	C	J	NA			
Chromium	0.010	mg/L	C	U	0.081	mg/L	C	-	NA			
Cyanide	NA				NA				0.395	mg/kg	C	-
Lead	0.040	mg/L	C	U	0.100	mg/L	C	-	NA			
Mercury	0.000	mg/L	C	U	0.000	mg/L	C	U	NA			
Selenium	0.080	mg/L	C	U	0.236	mg/L	C	-	NA			
Silver	0.010	mg/L	C	U	0.073	mg/L	C	J	NA			
Volatile Organics												
1,1,1-Trichloroethane	NA				NA				5.000	ug/L	C	U
1,1,2,2-Tetrachloroethane	NA				NA				5.000	ug/L	C	U
1,1,2-Trichloroethane	NA				NA				5.000	ug/L	C	U
1,1-Dichloroethane	NA				NA				5.000	ug/L	C	U
1,1-Dichloroethene	NA				5.000	ug/L	C	U	5.000	ug/L	C	U
1,2-Dichloroethane	NA				5.000	ug/L	C	U	5.000	ug/L	C	U
1,2-Dichloroethene	NA				NA				5.000	ug/L	C	U
1,2-Dichloropropane	NA				NA				5.000	ug/L	C	U
2-Butanone	NA				10.000	ug/L	C	U	10.000	ug/L	C	U
2-Hexanone	NA				NA				10.000	ug/L	C	U
4-Methyl-2-pentanone	NA				NA				10.000	ug/L	C	U
Acetone	NA				NA				9.000	ug/L	C	-
Benzene	NA				5.000	ug/L	C	U	5.000	ug/L	C	U
Bromodichloromethane	NA				NA				5.000	ug/L	C	U
Bromoform	NA				NA				5.000	ug/L	C	U
Bromomethane	NA				NA				10.000	ug/L	C	U
Carbon Tetrachloride	NA				5.000	ug/L	C	U	5.000	ug/L	C	U
Carbon disulfide	NA				NA				5.000	ug/L	C	U
Chlorobenzene	NA				5.000	ug/L	C	U	5.000	ug/L	C	U
Chloroethane	NA				NA				10.000	ug/L	C	U
Chloroform	NA				5.000	ug/L	C	U	5.000	ug/L	C	U
Chloromethane	NA				NA				10.000	ug/L	C	U
Dibromochloromethane	NA				NA				5.000	ug/L	C	U
Ethylbenzene	NA				NA				5.000	ug/L	C	U
Methylene chloride	NA				NA				10.000	ug/L	C	-
Pyridine	NA				20.000	ug/L	C	R	NA			
Styrene	NA				NA				5.000	ug/L	C	U
Tetrachloroethene	NA				5.000	ug/L	C	U	5.000	ug/L	C	U
Toluene	NA				NA				5.000	ug/L	C	U
Trichloroethene	NA				5.000	ug/L	C	U	5.000	ug/L	C	U

TABLE E-13
(Continued)

PHASE I - CHEMICAL PARAMETERS

BORING NUMBER	1711				1791				1791			
SAMPLE NUMBER	067017				067124				067125			
	10.5-12											
SAMPLING DATE	05/29/91				06/25/91				06/25/91			
CHEMICAL PARAMETERS	RESULTS	UNITS	L	VQ	RESULTS	UNITS	L	VQ	RESULTS	UNITS	L	VQ
Volatile Organics												
Vinyl Acetate	NA				NA				10.000	ug/L	C	U
Vinyl chloride	NA				10.000	ug/L	C	U	10.000	ug/L	C	U
Xylenes, Total	NA				NA				5.000	ug/L	C	U
cis-1,3-Dichloropropene	NA				NA				5.000	ug/L	C	U
trans-1,3-Dichloropropene	NA				NA				5.000	ug/L	C	U
Semivolatile Organics												
1,4-Dichlorobenzene	NA				20.000	ug/L	C	R	NA			
2,4,5-Trichlorophenol	NA				100.000	ug/L	C	R	NA			
2,4,6-Trichlorophenol	NA				20.000	ug/L	C	R	NA			
2,4-Dinitrotoluene	NA				20.000	ug/L	C	R	NA			
2-Methylphenol	NA				20.000	ug/L	C	R	NA			
3-Methylphenol	NA				20.000	ug/L	C	R	NA			
4-Methylphenol	NA				20.000	ug/L	C	R	NA			
Hexachlorobenzene	NA				20.000	ug/L	C	R	NA			
Hexachlorobutadiene	NA				20.000	ug/L	C	R	NA			
Hexachloroethane	NA				20.000	ug/L	C	R	NA			
Nitrobenzene	NA				20.000	ug/L	C	R	NA			
Pentachlorophenol	NA				100.000	ug/L	C	R	NA			
Herbicide Organics												
2,4,5-TP (Silvex)	3.600	ug/L	C	U	1.800	ug/L	C	U	NA			
2,4-D	24.000	ug/L	C	U	10.000	ug/L	C	U	NA			
Pesticide Organics/PCBs												
Endrin	0.100	ug/L	C	U	0.100	ug/L	C	U	NA			
Heptachlor	0.050	ug/L	C	U	0.050	ug/L	C	U	NA			
Heptachlor epoxide	0.050	ug/L	C	U	0.050	ug/L	C	U	NA			
Methoxychlor	0.500	ug/L	C	U	0.500	ug/L	C	U	NA			
Toxaphene	1.000	ug/L	C	U	1.000	ug/L	C	U	NA			
alpha-Chlordane	0.500	ug/L	C	U	0.500	ug/L	C	U	NA			
gamma-BHC (Lindane)	0.050	ug/L	C	U	0.050	ug/L	C	U	NA			
gamma-Chlordane	0.500	ug/L	C	U	0.500	ug/L	C	U	NA			
General Chemistry												
Sulfide	NA				NA				13.950	mg/kg	C	U
pH	NA				NA				7.390	stand	C	-

0266

TABLE E-13
(Continued)

PHASE II - CHEMICAL PARAMETERS

BORING NUMBER	1994				1995				1996			
SAMPLE NUMBER	116295				116114				112081			
	22-23.5				24-25.5				12-13			
SAMPLING DATE	05/13/93				05/01/93				04/29/93			
CHEMICAL PARAMETERS	RESULTS	UNITS	L	VQ	RESULTS	UNITS	L	VQ	RESULTS	UNITS	L	VQ
Inorganics												
Arsenic	0.050	mg/L	C	UJ	0.470	mg/L	C	R	0.452	mg/L	C	R
Barium	0.850	mg/L	C	-	0.913	mg/L	C	U	1.480	mg/L	C	-
Cadmium	0.005	mg/L	C	U	0.002	mg/L	C	U	0.002	mg/L	C	U
Chromium	0.010	mg/L	C	U	0.003	mg/L	C	U	0.003	mg/L	C	U
Copper	0.010	mg/L	C	U	0.002	mg/L	C	-	0.003	mg/L	C	-
Iron	0.109	mg/L	C	U	0.114	mg/L	C	-	0.008	mg/L	C	-
Lead	0.040	mg/L	C	UJ	0.015	mg/L	C	UJ	0.015	mg/L	C	UJ
Manganese	0.102	mg/L	C	-	0.095	mg/L	C	J	0.105	mg/L	C	J
Mercury	0.000	mg/L	C	U	0.000	mg/L	C	UJ	0.000	mg/L	C	UJ
Selenium	0.080	mg/L	C	UJ	0.110	mg/L	C	R	0.112	mg/L	C	R
Silver	0.010	mg/L	C	R	0.002	mg/L	C	UJ	0.002	mg/L	C	UJ
Zinc	0.076	mg/L	C	U	0.162	mg/L	C	R	0.144	mg/L	C	R
Volatile Organics												
1,1-Dichloroethene	5.000	ug/L	C	U	5.000	ug/L	C	U	5.000	ug/L	C	U
1,2-Dichloroethane	5.000	ug/L	C	U	5.000	ug/L	C	U	5.000	ug/L	C	U
2-Butanone	10.000	ug/L	C	U	10.000	ug/L	C	UJ	10.000	ug/L	C	UJ
Benzene	5.000	ug/L	C	U	5.000	ug/L	C	U	5.000	ug/L	C	U
Carbon Tetrachloride	5.000	ug/L	C	U	5.000	ug/L	C	U	5.000	ug/L	C	U
Chlorobenzene	5.000	ug/L	C	U	5.000	ug/L	C	U	5.000	ug/L	C	U
Chloroform	5.000	ug/L	C	U	5.000	ug/L	C	U	5.000	ug/L	C	U
Pyridine	200.000	ug/L	C	U	250.000	ug/L	C	U	250.000	ug/L	C	U
Tetrachloroethene	5.000	ug/L	C	U	5.000	ug/L	C	U	5.000	ug/L	C	U
Trichloroethene	5.000	ug/L	C	U	5.000	ug/L	C	U	5.000	ug/L	C	U
Vinyl chloride	10.000	ug/L	C	U	10.000	ug/L	C	U	10.000	ug/L	C	U
Semivolatile Organics												
1,4-Dichlorobenzene	20.000	ug/L	C	U	50.000	ug/L	C	U	50.000	ug/L	C	U
2,4,5-Trichlorophenol	100.000	ug/L	C	U	50.000	ug/L	C	U	50.000	ug/L	C	U
2,4,6-Trichlorophenol	20.000	ug/L	C	U	50.000	ug/L	C	U	50.000	ug/L	C	U
2,4-Dinitrotoluene	20.000	ug/L	C	U	50.000	ug/L	C	U	50.000	ug/L	C	U
Hexachlorobenzene	20.000	ug/L	C	U	50.000	ug/L	C	U	50.000	ug/L	C	U
Hexachlorobutadiene	20.000	ug/L	C	U	50.000	ug/L	C	U	50.000	ug/L	C	U
Hexachloroethane	20.000	ug/L	C	U	50.000	ug/L	C	U	50.000	ug/L	C	U
Nitrobenzene	20.000	ug/L	C	U	50.000	ug/L	C	U	50.000	ug/L	C	U
Pentachlorophenol	100.000	ug/L	C	U	250.000	ug/L	C	U	250.000	ug/L	C	U
Total Methylphenol	20.000	ug/L	C	U	50.000	ug/L	C	U	50.000	ug/L	C	U
Herbicide Organics												
2,4,5-TP (Silvex)	1.800	ug/L	C	U	17.000	ug/L	C	U	17.000	ug/L	C	U

FER\CRU2RI\JLG\TABE-13\February 4, 1994 8:54am

TABLE E-13
(Continued)

PHASE II - CHEMICAL PARAMETERS

BORING NUMBER	1994				1995				1996			
SAMPLE NUMBER	116295				116114				112081			
	22-23.5				24-25.5				12-13			
SAMPLING DATE	05/13/93				05/01/93				04/29/93			
CHEMICAL PARAMETERS	RESULTS	UNITS	L	VQ	RESULTS	UNITS	L	VQ	RESULTS	UNITS	L	VQ
Herbicide Organics												
2,4-D	10.000	ug/L	C	U	120.000	ug/L	C	U	120.000	ug/L	C	U
Pesticide Organics/PCBs												
Chlordane	NA				1.400	ug/L	C	U	1.400	ug/L	C	U
Endrin	0.100	ug/L	C	U	0.600	ug/L	C	U	0.600	ug/L	C	U
Heptachlor	0.050	ug/L	C	U	0.300	ug/L	C	U	0.300	ug/L	C	U
Heptachlor epoxide	0.050	ug/L	C	U	8.300	ug/L	C	U	8.300	ug/L	C	U
Methoxychlor	0.500	ug/L	C	U	18.000	ug/L	C	U	18.000	ug/L	C	U
Toxaphene	1.000	ug/L	C	U	24.000	ug/L	C	U	24.000	ug/L	C	U
alpha-Chlordane	0.500	ug/L	C	U	NA				NA			
gamma-BHC (Lindane)	0.050	ug/L	C	U	0.400	ug/L	C	U	0.400	ug/L	C	U
gamma-Chlordane	0.500	ug/L	C	U	NA				NA			

TABLE E-13
(Continued)

PHASE II - CHEMICAL PARAMETERS

BORING NUMBER	1997				1998				1998			
SAMPLE NUMBER	116216				116075				116074			
	26-27.5				0-1.5				2-3.5			
SAMPLING DATE	05/05/93				04/28/93				04/28/93			
CHEMICAL PARAMETERS	RESULTS	UNITS	L	VQ	RESULTS	UNITS	L	VQ	RESULTS	UNITS	L	VQ
Inorganics												
Arsenic	0.063	mg/L	C	U	NA				0.050	mg/L	C	UJ
Barium	1.580	mg/L	C	-	NA				1.070	mg/L	C	-
Cadmium	0.002	mg/L	C	U	NA				0.005	mg/L	C	U
Chromium	0.003	mg/L	C	U	NA				0.010	mg/L	C	U
Copper	0.002	mg/L	C	U	NA				0.010	mg/L	C	U
Iron	0.016	mg/L	C	U	NA				1.210	mg/L	C	-
Lead	0.015	mg/L	C	U	NA				0.040	mg/L	C	UJ
Manganese	0.097	mg/L	C	J	NA				0.432	mg/L	C	-
Mercury	0.000	mg/L	C	UJ	NA				0.000	mg/L	C	U
Selenium	0.094	mg/L	C	-	NA				0.080	mg/L	C	UJ
Silver	0.002	mg/L	C	UJ	NA				0.010	mg/L	C	U
Zinc	0.128	mg/L	C	R	NA				0.207	mg/L	C	U
Volatile Organics												
1,1-Dichloroethene	5.000	ug/L	C	U	5.000	ug/L	C	U	NA			
1,2-Dichloroethane	5.000	ug/L	C	U	5.000	ug/L	C	U	NA			
2-Butanone	10.000	ug/L	C	R	10.000	ug/L	C	U	NA			
Benzene	5.000	ug/L	C	U	5.000	ug/L	C	U	NA			
Carbon Tetrachloride	5.000	ug/L	C	U	5.000	ug/L	C	U	NA			
Chlorobenzene	5.000	ug/L	C	U	5.000	ug/L	C	U	NA			
Chloroform	5.000	ug/L	C	U	5.000	ug/L	C	U	NA			
Pyridine	250.000	ug/L	C	U	NA				200.000	ug/L	C	U
Tetrachloroethene	5.000	ug/L	C	U	5.000	ug/L	C	U	NA			
Trichloroethene	5.000	ug/L	C	U	5.000	ug/L	C	U	NA			
Vinyl chloride	10.000	ug/L	C	U	10.000	ug/L	C	U	NA			
Semivolatile Organics												
1,4-Dichlorobenzene	50.000	ug/L	C	U	NA				20.000	ug/L	C	U
2,4,5-Trichlorophenol	50.000	ug/L	C	U	NA				100.000	ug/L	C	U
2,4,6-Trichlorophenol	50.000	ug/L	C	U	NA				20.000	ug/L	C	U
2,4-Dinitrotoluene	50.000	ug/L	C	U	NA				20.000	ug/L	C	U
Hexachlorobenzene	50.000	ug/L	C	U	NA				20.000	ug/L	C	U
Hexachlorobutadiene	50.000	ug/L	C	U	NA				20.000	ug/L	C	U
Hexachloroethane	50.000	ug/L	C	U	NA				20.000	ug/L	C	U
Nitrobenzene	50.000	ug/L	C	U	NA				20.000	ug/L	C	U
Pentachlorophenol	250.000	ug/L	C	U	NA				100.000	ug/L	C	U
Total Methylphenol	50.000	ug/L	C	U	NA				20.000	ug/L	C	U
Herbicide Organics												
2,4,5-TP (Silvex)	17000.000	ug/L	C	U	NA				1.800	ug/L	C	U

0260
5174

TABLE E-13
(Continued)

PHASE II - CHEMICAL PARAMETERS

BORING NUMBER	1997	1998	1998
SAMPLE NUMBER	116216	116075	116074
	26-27.5	0-1.5	2-3.5
SAMPLING DATE	05/05/93	04/28/93	04/28/93

CHEMICAL PARAMETERS	RESULTS	UNITS	L	VQ	RESULTS	UNITS	L	VQ	RESULTS	UNITS	L	VQ
Herbicide Organics												
2,4-D	120000.000	ug/L	C	U	NA				10.000	ug/L	C	U
Pesticide Organics/PCBs												
Chlordane	1.400	ug/L	C	U	NA				NA			
Endrin	0.600	ug/L	C	U	NA				0.100	ug/L	C	U
Heptachlor	0.300	ug/L	C	U	NA				0.050	ug/L	C	U
Heptachlor epoxide	8.300	ug/L	C	U	NA				0.050	ug/L	C	U
Methoxychlor	18.000	ug/L	C	U	NA				0.500	ug/L	C	U
Toxaphene	24.000	ug/L	C	U	NA				1.000	ug/L	C	U
alpha-Chlordane	NA				NA				0.500	ug/L	C	U
gamma-BHC (Lindane)	0.400	ug/L	C	U	NA				0.050	ug/L	C	U
gamma-Chlordane	NA				NA				0.500	ug/L	C	U

TABLE E-14

INACTIVE FLYASH PILE
RI/FS QUALITY CONTROL SAMPLES
OPERABLE UNIT 2 REMEDIAL INVESTIGATION
FERNALD ENVIRONMENTAL MANAGEMENT PROJECT

PHASE I - RADIOLOGICAL PARAMETERS

QC TYPE	Rinsate			Rinsate		
SAMPLE NUMBER	007352			007308		
ASSOCIATED SAMPLES	007233			007301		
SAMPLING DATE	10/17/87			10/17/87		
RADIOLOGICAL PARAMETERS	RESULTS	UNITS	VQ	RESULTS	UNITS	VQ
RA-226	1.000	pci/L	U	1.000	pci/L	U
RA-228	3.000	pci/L	U	3.000	pci/L	U
SR-90	5.000	pci/L	UJ	5.000	pci/L	UJ
TC-99	30.000	pci/L	U	30.000	pci/L	U
U-234	1.000	pci/L	UJ	1.000	pci/L	UJ
U-235/236	1.000	pci/L	UJ	1.000	pci/L	UJ
U-238	1.000	pci/L	UJ	1.000	pci/L	UJ

0271

- 5174

TABLE E-14
(Continued)

PHASE I - CHEMICAL PARAMETERS

QC TYPE	Rinsate	Rinsate	Field Blank
SAMPLE NUMBER	007352	007308	067113
ASSOCIATED SAMPLES	007233	007301	007096, 067102, 067112
SAMPLING DATE	10/17/87	10/17/87	06/17/91

CHEMICAL PARAMETERS	RESULTS	UNITS	L	VQ	RESULTS	UNITS	L	VQ	RESULTS	UNITS	L	VQ
Inorganics												
Arsenic	0.200	mg/L	3	U	0.200	mg/L	3	U	NA			
Barium	0.012	mg/L	3	U	0.016	mg/L	3	U	NA			
Cadmium	0.003	mg/L	3	J	0.004	mg/L	3	J	NA			
Chromium	0.020	mg/L	3	U	0.020	mg/L	3	U	NA			
Copper	0.120	mg/L	3	U	0.190	mg/L	3	-	NA			
Iron	0.005	mg/L	3	U	0.050	mg/L	3	U	NA			
Lead	0.050	mg/L	3	U	0.060	mg/L	3	-	NA			
Manganese	0.035	mg/L	3	U	1.830	mg/L	3	-	NA			
Mercury	0.000	mg/L	3	UJ	0.000	mg/L	3	UJ	NA			
Molybdenum	0.020	mg/L	3	U	0.020	mg/L	3	U	NA			
Nickel	0.020	mg/L	3	U	0.020	mg/L	3	U	NA			
Selenium	0.200	mg/L	3	U	0.200	mg/L	3	U	NA			
Silver	0.010	mg/L	3	U	0.010	mg/L	3	U	NA			
Sodium	2.750	mg/L	3	U	5.080	mg/L	3	U	NA			
Volatile Organics												
1,1-Dichloroethene	NA				NA				0.005	mg/L	3	U
1,2-Dichloroethane	NA				NA				0.005	mg/L	3	U
2-Butanone	NA				NA				0.010	mg/L	3	U
Benzene	NA				NA				0.005	mg/L	3	U
Carbon Tetrachloride	NA				NA				0.005	mg/L	3	U
Chlorobenzene	NA				NA				0.005	mg/L	3	U
Chloroform	NA				NA				0.006	mg/L	3	-
Tetrachloroethene	NA				NA				0.005	mg/L	3	U
Trichloroethene	NA				NA				0.005	mg/L	3	U
Vinyl chloride	NA				NA				0.010	mg/L	3	U
General Chemistry												
Chloride	1.000	mg/L	3	J	0.500	mg/L	3	UJ	NA			
Fluoride	0.100	mg/L	3	U	0.100	mg/L	3	U	NA			
Hexavalent Chromium	0.010	mg/L	3	UJ	0.010	mg/L	3	UJ	NA			
Nitrate	0.100	mg/L	3	U	0.100	mg/L	3	U	NA			
Phenols	0.010	mg/L	3	J	0.010	mg/L	3	J	NA			
Sulfate	2.100	mg/L	3	-	2.700	mg/L	3	-	NA			

TABLE E-14
(Continued)

PHASE I - CHEMICAL PARAMETERS

QC TYPE	Field Blank	Field Blank	Trip Blank
SAMPLE NUMBER	067068	067069	067054
ASSOCIATED SAMPLES	067064, 067065	067064, 067065	067047
SAMPLING DATE	06/06/91	06/06/91	06/01/91

CHEMICAL PARAMETERS	RESULTS	UNITS	L	VQ	RESULTS	UNITS	L	VQ	RESULTS	UNITS	L	VQ
Volatile Organics												
1,1,1-Trichloroethane	0.005	mg/kg	4	U	0.005	mg/kg	4	U	0.005	mg/kg	4	U
1,1,2,2-Tetrachloroethane	0.005	mg/kg	4	U	0.005	mg/kg	4	U	0.005	mg/kg	4	U
1,1,2-Trichloroethane	0.005	mg/kg	4	U	0.005	mg/kg	4	U	0.005	mg/kg	4	U
1,1-Dichloroethane	0.005	mg/kg	4	U	0.005	mg/kg	4	U	0.005	mg/kg	4	U
1,1-Dichloroethene	0.005	mg/kg	4	U	0.005	mg/kg	4	U	0.005	mg/kg	4	U
1,2-Dichloroethane	0.005	mg/kg	4	UJ	0.005	mg/kg	4	UJ	0.005	mg/kg	4	U
1,2-Dichloroethene	0.005	mg/kg	4	U	0.005	mg/kg	4	U	0.005	mg/kg	4	U
1,2-Dichloropropane	0.005	mg/kg	4	U	0.005	mg/kg	4	U	0.005	mg/kg	4	U
2-Butanone	0.010	mg/kg	4	UJ	0.010	mg/kg	4	UJ	0.010	mg/kg	4	R
2-Hexanone	0.010	mg/kg	4	U	0.010	mg/kg	4	U	0.010	mg/kg	4	U
4-Methyl-2-pentanone	0.010	mg/kg	4	U	0.010	mg/kg	4	U	0.010	mg/kg	4	U
Acetone	0.006	mg/kg	4	J	0.005	mg/kg	4	J	0.010	mg/kg	4	R
Benzene	0.005	mg/kg	4	U	0.005	mg/kg	4	U	0.005	mg/kg	4	UJ
Bromodichloromethane	0.002	mg/kg	4	J	0.002	mg/kg	4	J	0.005	mg/kg	4	U
Bromoform	0.005	mg/kg	4	U	0.005	mg/kg	4	U	0.005	mg/kg	4	U
Bromomethane	0.010	mg/kg	4	U	0.010	mg/kg	4	U	0.010	mg/kg	4	UJ
Carbon Tetrachloride	0.005	mg/kg	4	U	0.005	mg/kg	4	U	0.005	mg/kg	4	U
Carbon disulfide	0.005	mg/kg	4	U	0.005	mg/kg	4	U	0.005	mg/kg	4	UJ
Chlorobenzene	0.005	mg/kg	4	U	0.005	mg/kg	4	U	0.005	mg/kg	4	UJ
Chloroethane	0.010	mg/kg	4	U	0.010	mg/kg	4	U	0.010	mg/kg	4	U
Chloroform	0.008	mg/kg	4	-	0.008	mg/kg	4	-	0.005	mg/kg	4	-
Chloromethane	0.010	mg/kg	4	UJ	0.010	mg/kg	4	UJ	0.010	mg/kg	4	UJ
Dibromochloromethane	0.005	mg/kg	4	U	0.005	mg/kg	4	U	0.005	mg/kg	4	U
Ethylbenzene	0.005	mg/kg	4	U	0.005	mg/kg	4	U	0.005	mg/kg	4	UJ
Methylene chloride	0.001	mg/kg	4	J	0.001	mg/kg	4	J	0.001	mg/kg	4	J
Styrene	0.005	mg/kg	4	U	0.005	mg/kg	4	U	0.005	mg/kg	4	UJ
Tetrachloroethene	0.005	mg/kg	4	U	0.005	mg/kg	4	U	0.005	mg/kg	4	U
Toluene	0.005	mg/kg	4	U	0.005	mg/kg	4	U	0.005	mg/kg	4	UJ
Trichloroethene	0.005	mg/kg	4	U	0.005	mg/kg	4	U	0.002	mg/kg	4	J
Vinyl Acetate	0.010	mg/kg	4	U	0.010	mg/kg	4	U	0.010	mg/kg	4	U
Vinyl chloride	0.010	mg/kg	4	U	0.010	mg/kg	4	U	0.010	mg/kg	4	U
Xylenes, Total	0.005	mg/kg	4	U	0.005	mg/kg	4	U	0.005	mg/kg	4	UJ
cis-1,3-Dichloropropene	0.005	mg/kg	4	U	0.005	mg/kg	4	U	0.005	mg/kg	4	U
trans-1,3-Dichloropropene	0.005	mg/kg	4	U	0.005	mg/kg	4	U	0.005	mg/kg	4	U

TABLE E-14
(Continued)

PHASE I - CHEMICAL PARAMETERS

QC TYPE	Field Blank	Field Blank	Field Blank
SAMPLE NUMBER	067055	067023	067024
ASSOCIATED SAMPLES	067055	067020	067020
SAMPLING DATE	06/01/91	05/29/91	05/29/91

CHEMICAL PARAMETERS	RESULTS	UNITS	L	VQ	RESULTS	UNITS	L	VQ	RESULTS	UNITS	L	VQ
Volatile Organics												
1,1,1-Trichloroethane	0.005	mg/kg	4	U	NA				NA			
1,1,2,2-Tetrachloroethane	0.005	mg/kg	4	U	NA				NA			
1,1,2-Trichloroethane	0.005	mg/kg	4	U	NA				NA			
1,1-Dichloroethane	0.005	mg/kg	4	U	NA				NA			
1,1-Dichloroethene	0.005	mg/kg	4	U	0.005	mg/L	3	U	0.005	mg/L	3	U
1,2-Dichloroethane	0.005	mg/kg	4	U	0.005	mg/L	3	U	0.005	mg/L	3	U
1,2-Dichloroethene	0.005	mg/kg	4	U	NA				NA			
1,2-Dichloropropane	0.005	mg/kg	4	U	NA				NA			
2-Butanone	0.010	mg/kg	4	R	0.010	mg/L	3	U	0.010	mg/L	3	U
2-Hexanone	0.010	mg/kg	4	U	NA				NA			
4-Methyl-2-pentanone	0.010	mg/kg	4	U	NA				NA			
Acetone	0.010	mg/kg	4	R	NA				NA			
Benzene	0.005	mg/kg	4	UJ	0.005	mg/L	3	U	0.005	mg/L	3	U
Bromodichloromethane	0.005	mg/kg	4	U	NA				NA			
Bromoform	0.005	mg/kg	4	U	NA				NA			
Bromomethane	0.010	mg/kg	4	UJ	NA				NA			
Carbon Tetrachloride	0.005	mg/kg	4	U	0.005	mg/L	3	U	0.005	mg/L	3	U
Carbon disulfide	0.005	mg/kg	4	UJ	NA				NA			
Chlorobenzene	0.005	mg/kg	4	UJ	0.005	mg/L	3	U	0.005	mg/L	3	U
Chloroethane	0.010	mg/kg	4	U	NA				NA			
Chloroform	0.005	mg/kg	4	-	0.020	mg/L	3	-	0.019	mg/L	3	-
Chloromethane	0.010	mg/kg	4	UJ	NA				NA			
Dibromochloromethane	0.005	mg/kg	4	U	NA				NA			
Ethylbenzene	0.005	mg/kg	4	UJ	NA				NA			
Methylene chloride	0.003	mg/kg	4	J	NA				NA			
Styrene	0.005	mg/kg	4	UJ	NA				NA			
Tetrachloroethene	0.005	mg/kg	4	U	0.005	mg/L	3	U	0.005	mg/L	3	U
Toluene	0.005	mg/kg	4	UJ	NA				NA			
Trichloroethene	0.005	mg/kg	4	U	0.005	mg/L	3	U	0.005	mg/L	3	U
Vinyl Acetate	0.010	mg/kg	4	U	NA				NA			
Vinyl chloride	0.010	mg/kg	4	U	0.010	mg/L	3	U	0.010	mg/L	3	U
Xylenes, Total	0.005	mg/kg	4	UJ	NA				NA			
cis-1,3-Dichloropropene	0.005	mg/kg	4	U	NA				NA			
trans-1,3-Dichloropropene	0.005	mg/kg	4	U	NA				NA			

TABLE E-14
(Continued)

PHASE I - CHEMICAL PARAMETERS

QC TYPE	Field Blank				Trip/Field Blank				Rinsate			
SAMPLE NUMBER	067127				067621				067622			
ASSOCIATED SAMPLES	067122				067604, 067609				007604, 067609			
SAMPLING DATE	06/25/91				02/22/92				02/22/92			
CHEMICAL PARAMETERS	RESULTS	UNITS	L	VQ	RESULTS	UNITS	L	VQ	RESULTS	UNITS	L	VQ
Volatile Organics												
1,1,1-Trichloroethane	0.005	mg/L	3	U	0.005	mg/L	4	UJ	0.005	mg/L	4	UJ
1,1,2,2-Tetrachloroethane	0.005	mg/L	3	U	0.005	mg/L	4	U	0.005	mg/L	4	U
1,1,2-Trichloroethane	0.005	mg/L	3	U	0.005	mg/L	4	U	0.005	mg/L	4	U
1,1-Dichloroethane	0.005	mg/L	3	U	0.005	mg/L	4	U	0.005	mg/L	4	U
1,1-Dichloroethene	0.005	mg/L	3	U	0.005	mg/L	4	U	0.005	mg/L	4	U
1,2-Dichloroethane	0.005	mg/L	3	U	0.005	mg/L	4	U	0.005	mg/L	4	U
1,2-Dichloroethene	0.005	mg/L	3	U	0.005	mg/L	4	U	0.005	mg/L	4	U
1,2-Dichloropropane	0.005	mg/L	3	U	0.005	mg/L	4	U	0.005	mg/L	4	U
2-Butanone	0.010	mg/L	3	U	0.010	mg/L	4	UJ	0.010	mg/L	4	UJ
2-Hexanone	0.010	mg/L	3	U	0.010	mg/L	4	UJ	0.010	mg/L	4	UJ
4-Methyl-2-pentanone	0.010	mg/L	3	U	0.010	mg/L	4	U	0.010	mg/L	4	U
Acetone	0.009	mg/L	3	-	0.004	mg/L	4	J	0.003	mg/L	4	J
Benzene	0.005	mg/L	3	U	0.005	mg/L	4	U	0.005	mg/L	4	U
Bromodichloromethane	0.005	mg/L	3	U	0.001	mg/L	4	J	0.005	mg/L	4	U
Bromoform	0.005	mg/L	3	U	0.005	mg/L	4	UJ	0.005	mg/L	4	UJ
Bromomethane	0.010	mg/L	3	U	0.010	mg/L	4	UJ	0.010	mg/L	4	UJ
Carbon Tetrachloride	0.005	mg/L	3	U	0.005	mg/L	4	U	0.005	mg/L	4	U
Carbon disulfide	0.005	mg/L	3	U	0.005	mg/L	4	U	0.005	mg/L	4	U
Chlorobenzene	0.005	mg/L	3	U	0.005	mg/L	4	U	0.005	mg/L	4	U
Chloroethane	0.010	mg/L	3	U	0.010	mg/L	4	U	0.010	mg/L	4	U
Chloroform	0.005	mg/L	3	U	0.004	mg/L	4	-	0.002	mg/L	4	J
Chloromethane	0.010	mg/L	3	U	0.010	mg/L	4	U	0.010	mg/L	4	U
Dibromochloromethane	0.005	mg/L	3	U	0.005	mg/L	4	U	0.005	mg/L	4	U
Ethylbenzene	0.005	mg/L	3	U	0.005	mg/L	4	U	0.005	mg/L	4	U
Methylene chloride	0.010	mg/L	3	-	0.002	mg/L	4	J	0.002	mg/L	4	J
Styrene	0.005	mg/L	3	U	0.005	mg/L	4	U	0.005	mg/L	4	U
Tetrachloroethene	0.005	mg/L	3	U	0.005	mg/L	4	U	0.005	mg/L	4	U
Toluene	0.005	mg/L	3	U	0.005	mg/L	4	U	0.002	mg/L	4	J
Trichloroethene	0.005	mg/L	3	U	0.005	mg/L	4	U	0.005	mg/L	4	U
Vinyl Acetate	0.010	mg/L	3	U	0.010	mg/L	4	U	0.010	mg/L	4	U
Vinyl chloride	0.010	mg/L	3	U	0.010	mg/L	4	U	0.010	mg/L	4	U
Xylenes, Total	0.005	mg/L	3	U	0.005	mg/L	4	U	0.005	mg/L	4	U
cis-1,3-Dichloropropene	0.005	mg/L	3	U	0.005	mg/L	4	UJ	0.005	mg/L	4	UJ
trans-1,3-Dichloropropene	0.005	mg/L	3	U	0.005	mg/L	4	UJ	0.005	mg/L	4	UJ
Semivolatile Organics												
1,2,4-Trichlorobenzene	NA				NA				0.010	mg/L	4	U
1,2-Dichlorobenzene	NA				NA				0.010	mg/L	4	U
1,3-Dichlorobenzene	NA				NA				0.010	mg/L	4	U
1,4-Dichlorobenzene	NA				NA				0.010	mg/L	4	U
2,4,5-Trichlorophenol	NA				NA				0.050	mg/L	4	U

0275

5174

TABLE E-14
(Continued)

PHASE I - CHEMICAL PARAMETERS

QC TYPE	Field Blank	Trip/Field Blank	Rinsate
SAMPLE NUMBER	067127	067621	067622
ASSOCIATED SAMPLES	067122	067604, 067609	067604, 067609
SAMPLING DATE	06/25/91	02/22/92	02/22/92

CHEMICAL PARAMETERS	RESULTS	UNITS	L	VQ	RESULTS	UNITS	L	VQ	RESULTS	UNITS	L	VQ
Semivolatile Organics												
2,4,6-Trichlorophenol	NA				NA				0.010	mg/L	4	U
2,4-Dichlorophenol	NA				NA				0.010	mg/L	4	U
2,4-Dimethylphenol	NA				NA				0.010	mg/L	4	U
2,4-Dinitrophenol	NA				NA				0.050	mg/L	4	U
2,4-Dinitrotoluene	NA				NA				0.010	mg/L	4	U
2,6-Dinitrotoluene	NA				NA				0.010	mg/L	4	U
2-Chloronaphthalene	NA				NA				0.010	mg/L	4	U
2-Chlorophenol	NA				NA				0.010	mg/L	4	U
2-Methylnaphthalene	NA				NA				0.010	mg/L	4	U
2-Methylphenol	NA				NA				0.010	mg/L	4	U
2-Nitroaniline	NA				NA				0.050	mg/L	4	U
2-Nitrophenol	NA				NA				0.010	mg/L	4	UJ
3,3'-Dichlorobenzidine	NA				NA				0.020	mg/L	4	U
3-Nitroaniline	NA				NA				0.050	mg/L	4	U
4,6-Dinitro-2-methylphenol	NA				NA				0.050	mg/L	4	U
4-Bromophenyl phenyl ether	NA				NA				0.010	mg/L	4	U
4-Chloro-3-methylphenol	NA				NA				0.010	mg/L	4	U
4-Chlorophenylphenyl ether	NA				NA				0.010	mg/L	4	U
4-Methylphenol	NA				NA				0.010	mg/L	4	U
4-Nitroaniline	NA				NA				0.050	mg/L	4	U
4-Nitrophenol	NA				NA				0.050	mg/L	4	UJ
Acenaphthene	NA				NA				0.010	mg/L	4	U
Acenaphthylene	NA				NA				0.010	mg/L	4	U
Anthracene	NA				NA				0.010	mg/L	4	U
Benzo(a)anthracene	NA				NA				0.010	mg/L	4	U
Benzo(a)pyrene	NA				NA				0.010	mg/L	4	U
Benzo(b)fluoranthene	NA				NA				0.010	mg/L	4	U
Benzo(g,h,i)perylene	NA				NA				0.010	mg/L	4	U
Benzo(k)fluoranthene	NA				NA				0.010	mg/L	4	U
Benzoic acid	NA				NA				0.050	mg/L	4	U
Benzyl alcohol	NA				NA				0.010	mg/L	4	U
Butyl benzyl phthalate	NA				NA				0.010	mg/L	4	U
Chrysene	NA				NA				0.010	mg/L	4	U
Di-n-butyl phthalate	NA				NA				0.010	mg/L	4	U
Di-n-octyl phthalate	NA				NA				0.010	mg/L	4	U
Dibenzo(a,h)anthracene	NA				NA				0.010	mg/L	4	U
Dibenzofuran	NA				NA				0.010	mg/L	4	U
Diethyl phthalate	NA				NA				0.010	mg/L	4	U
Dimethyl phthalate	NA				NA				0.010	mg/L	4	U
Fluoranthene	NA				NA				0.010	mg/L	4	U
Fluorene	NA				NA				0.010	mg/L	4	U
Hexachlorobenzene	NA				NA				0.010	mg/L	4	U

TABLE E-14
(Continued)

PHASE I - CHEMICAL PARAMETERS

QC TYPE	Field Blank				Trip/Field Blank				Rinsate			
SAMPLE NUMBER	067127				067621				067622			
ASSOCIATED SAMPLES	067122				067604, 007609				067604, 067609			
SAMPLING DATE	06/25/91				02/22/92				02/22/92			
CHEMICAL PARAMETERS	RESULTS	UNITS	L	VQ	RESULTS	UNITS	L	VQ	RESULTS	UNITS	L	VQ
Semivolatile Organics												
Hexachlorobutadiene	NA				NA				0.010	mg/L	4	U
Hexachlorocyclopentadiene	NA				NA				0.010	mg/L	4	U
Hexachloroethane	NA				NA				0.010	mg/L	4	U
Indeno(1,2,3-cd)pyrene	NA				NA				0.010	mg/L	4	U
Isophorone	NA				NA				0.010	mg/L	4	U
N-Nitroso-di-n-propylamine	NA				NA				0.010	mg/L	4	U
N-Nitrosodiphenylamine	NA				NA				0.010	mg/L	4	U
Naphthalene	NA				NA				0.010	mg/L	4	U
Nitrobenzene	NA				NA				0.010	mg/L	4	U
Pentachlorophenol	NA				NA				0.050	mg/L	4	U
Phenanthrene	NA				NA				0.010	mg/L	4	U
Phenol	NA				NA				0.010	mg/L	4	U
Pyrene	NA				NA				0.010	mg/L	4	U
bis(2-Chloroethoxy)methane	NA				NA				0.010	mg/L	4	U
bis(2-Chloroethyl)ether	NA				NA				0.010	mg/L	4	U
bis(2-Chloroisopropyl) ether	NA				NA				0.010	mg/L	4	U
bis(2-Ethylhexyl) phthalate	NA				NA				0.010	mg/L	4	U
p-Chloroaniline	NA				NA				0.010	mg/L	4	U
General Chemistry												
Total Organic Carbon	NA				NA				1.000	mg/L	3	U

0277

5174

PHASE I - CHEMICAL PARAMETERS

QC TYPE	Trip/Field Blank
SAMPLE NUMBER	067637
ASSOCIATED SAMPLES	067627, 067632
SAMPLING DATE	02/23/92

CHEMICAL PARAMETERS	RESULTS	UNITS	L	VQ
Volatile Organics				
1,1,1-Trichloroethane	0.005	mg/L	4	UJ
1,1,2,2-Tetrachloroethane	0.005	mg/L	4	U
1,1,2-Trichloroethane	0.005	mg/L	4	U
1,1-Dichloroethane	0.005	mg/L	4	U
1,1-Dichloroethene	0.005	mg/L	4	U
1,2-Dichloroethane	0.005	mg/L	4	U
1,2-Dichloroethene	0.005	mg/L	4	U
1,2-Dichloropropane	0.005	mg/L	4	U
2-Butanone	0.010	mg/L	4	UJ
2-Hexanone	0.010	mg/L	4	UJ
4-Methyl-2-pentanone	0.010	mg/L	4	U
Acetone	0.002	mg/L	4	J
Benzene	0.005	mg/L	4	U
Bromodichloromethane	0.001	mg/L	4	J
Bromoform	0.005	mg/L	4	UJ
Bromomethane	0.010	mg/L	4	UJ
Carbon Tetrachloride	0.005	mg/L	4	U
Carbon disulfide	0.005	mg/L	4	U
Chlorobenzene	0.005	mg/L	4	U
Chloroethane	0.010	mg/L	4	U
Chloroform	0.005	mg/L	4	-
Chloromethane	0.010	mg/L	4	U
Dibromochloromethane	0.005	mg/L	4	U
Ethylbenzene	0.005	mg/L	4	U
Methylene chloride	0.005	mg/L	4	UJ
Styrene	0.005	mg/L	4	U
Tetrachloroethene	0.005	mg/L	4	U
Toluene	0.005	mg/L	4	U
Trichloroethene	0.005	mg/L	4	U
Vinyl Acetate	0.010	mg/L	4	U
Vinyl chloride	0.010	mg/L	4	U
Xylenes, Total	0.005	mg/L	4	U
cis-1,3-Dichloropropene	0.005	mg/L	4	UJ
trans-1,3-Dichloropropene	0.005	mg/L	4	UJ

0278

TABLE E-14
(Continued)

PHASE II - RADIOLOGICAL PARAMETERS

QC TYPE	FIELD BLANK			RINSATE		
SAMPLE NUMBER	111809			111808		
ASSOCIATED SAMPLES	111813, 111815, 111812			111812, 111813, 111815		
SAMPLING DATE	04/17/93			04/17/93		
RADIOLOGICAL PARAMETERS	RESULTS	UNITS	VQ	RESULTS	UNITS	VQ
CS-137	19.000	pci/L	UJ	13.000	pci/L	UJ
GROSS ALPHA	0.563	pci/L	UJ	0.747	pci/L	UJ
GROSS BETA	0.952	pci/L	UJ	0.974	pci/L	UJ
NP-237	NA			0.132	pci/L	U
PU-238	0.127	pci/L	UJ	0.178	pci/L	J
PU-239/240	0.127	pci/L	UJ	0.037	pci/L	UJ
RA-226	0.072	pci/L	UJ	0.115	pci/L	UJ
RA-228	1.440	pci/L	UJ	1.050	pci/L	UJ
RU-106	116.000	pci/L	UJ	112.000	pci/L	UJ
SR-90	0.740	pci/L	UJ	0.706	pci/L	UJ
TC-99	11.170	pci/L	UJ	10.800	pci/L	UJ
TH-228	0.180	pci/L	UJ	0.866	pci/g	R
TH-230	0.165	pci/L	UJ	0.698	pci/g	R
TH-232	0.046	pci/L	UJ	0.614	pci/g	R
TH-TOTAL	0.428	ug/L	UJ	5.650	µg/g	R
U-234	0.066	pci/L	UJ	0.054	pci/L	UJ
U-235/236	0.082	pci/L	UJ	0.082	pci/L	UJ
U-238	0.075	pci/L	UJ	0.055	pci/L	UJ
U-TOTAL	5.000	ug/L	UJ	5.000	ug/L	U

0279

5174

TABLE E-14
(Continued)

PHASE II - CHEMICAL PARAMETERS

QC TYPE	FIELD BLANK				FIELD BLANK				RINSATE			
SAMPLE NUMBER	111807				111809				111808			
ASSOCIATED SAMPLES	111794, 111795, 111806, 111796				111812, 111813, 111815				111812, 111813, 111815			
SAMPLING DATE	04/16/93				04/17/93				04/17/93			
CHEMICAL PARAMETERS	RESULTS	UNITS	L	VQ	RESULTS	UNITS	L	VQ	RESULTS	UNITS	L	VQ
Inorganics												
Aluminum	NA				0.058	mg/L	C	U	0.058	mg/L	C	U
Antimony	NA				0.001	mg/L	C	U	0.001	mg/L	C	U
Arsenic	NA				0.002	mg/L	C	U	0.002	mg/L	C	U
Barium	NA				0.002	mg/L	C	U	0.002	mg/L	C	U
Beryllium	NA				0.002	mg/L	C	U	0.002	mg/L	C	U
Cadmium	NA				0.005	mg/L	C	U	0.005	mg/L	C	U
Calcium	NA				0.020	mg/L	C	U	0.037	mg/L	C	-
Chromium	NA				0.010	mg/L	C	U	0.010	mg/L	C	U
Cobalt	NA				0.010	mg/L	C	U	0.010	mg/L	C	U
Copper	NA				0.010	mg/L	C	U	0.010	mg/L	C	U
Cyanide	NA				0.002	mg/L	C	U	0.002	mg/L	C	U
Iron	NA				0.020	mg/L	C	U	0.020	mg/L	C	U
Lead	NA				0.002	mg/L	C	U	0.002	mg/L	C	U
Magnesium	NA				0.050	mg/L	C	U	0.050	mg/L	C	U
Manganese	NA				0.010	mg/L	C	U	0.010	mg/L	C	U
Mercury	NA				0.000	mg/L	C	U	0.000	mg/L	C	U
Molybdenum	NA				0.020	mg/L	C	U	0.020	mg/L	C	U
Nickel	NA				0.020	mg/L	C	U	0.020	mg/L	C	U
Potassium	NA.				0.100	mg/L	C	U	0.100	mg/L	C	U
Selenium	NA				0.010	mg/L	C	U	0.002	mg/L	C	UJ
Silicon	NA				0.100	mg/L	C	U	0.100	mg/L	C	U
Silver	NA				0.010	mg/L	C	U	0.010	mg/L	C	U
Sodium	NA				0.100	mg/L	C	U	0.100	mg/L	C	U
Thallium	NA				0.002	mg/L	C	U	0.002	mg/L	C	U
Vanadium	NA				0.010	mg/L	C	U	0.010	mg/L	C	U
Zinc	NA				0.005	mg/L	C	U	0.006	mg/L	C	-
Volatile Organics												
1,1,1-Trichloroethane	0.010	mg/L	C	U	0.010	mg/L	C	U	0.010	mg/L	C	U
1,1,2,2-Tetrachloroethane	0.010	mg/L	C	U	0.010	mg/L	C	U	0.010	mg/L	C	U
1,1,2-Trichloroethane	0.010	mg/L	C	U	0.010	mg/L	C	U	0.010	mg/L	C	U
1,1-Dichloroethane	0.010	mg/L	C	U	0.010	mg/L	C	U	0.010	mg/L	C	U
1,1-Dichloroethene	0.010	mg/L	C	U	0.010	mg/L	C	U	0.010	mg/L	C	U
1,2-Dichloroethane	0.010	mg/L	C	U	0.010	mg/L	C	U	0.010	mg/L	C	U
1,2-Dichloroethene	0.010	mg/L	C	U	0.010	mg/L	C	U	0.010	mg/L	C	U
1,2-Dichloropropane	0.010	mg/L	C	U	0.010	mg/L	C	U	0.010	mg/L	C	U
2-Butanone	0.010	mg/L	C	U	0.010	mg/L	C	U	0.010	mg/L	C	U
2-Hexanone	0.010	mg/L	C	UJ	0.010	mg/L	C	U	0.010	mg/L	C	U
4-Methyl-2-pentanone	0.010	mg/L	C	U	0.010	mg/L	C	U	0.010	mg/L	C	U
Acetone	0.010	mg/L	C	U	0.010	mg/L	C	U	0.010	mg/L	C	U
Benzene	0.010	mg/L	C	U	0.010	mg/L	C	U	0.010	mg/L	C	U

TABLE E-14
(Continued)

PHASE II - CHEMICAL PARAMETERS

QC TYPE	FIELD BLANK				FIELD BLANK				RINSATE			
SAMPLE NUMBER	111807				111809				111808			
ASSOCIATED SAMPLES	111794, 111795, 111796, 111806				111812, 111813, 111815				111812, 111813, 111815			
SAMPLING DATE	04/16/93				04/17/93				04/17/93			
CHEMICAL PARAMETERS	RESULTS	UNITS	L	VQ	RESULTS	UNITS	L	VQ	RESULTS	UNITS	L	VQ
Volatile Organics												
Bromodichloromethane	0.010	mg/L	C	U	0.010	mg/L	C	U	0.010	mg/L	C	U
Bromoform	0.010	mg/L	C	U	0.010	mg/L	C	U	0.010	mg/L	C	U
Bromomethane	0.010	mg/L	C	U	0.010	mg/L	C	U	0.010	mg/L	C	U
Carbon Tetrachloride	0.010	mg/L	C	U	0.010	mg/L	C	U	0.010	mg/L	C	U
Carbon disulfide	0.010	mg/L	C	U	0.010	mg/L	C	U	0.010	mg/L	C	U
Chlorobenzene	0.010	mg/L	C	U	0.010	mg/L	C	U	0.010	mg/L	C	U
Chloroethane	0.010	mg/L	C	U	0.010	mg/L	C	U	0.010	mg/L	C	U
Chloroform	0.002	mg/L	C	J	0.003	mg/L	C	J	0.003	mg/L	C	J
Chloromethane	0.010	mg/L	C	U	0.010	mg/L	C	U	0.002	mg/L	C	J
Dibromochloromethane	0.010	mg/L	C	U	0.010	mg/L	C	U	0.010	mg/L	C	U
Ethylbenzene	0.010	mg/L	C	U	0.010	mg/L	C	U	0.010	mg/L	C	U
Methylene chloride	0.010	mg/L	C	UJ	0.034	mg/L	C	UJ	0.035	mg/L	C	UJ
Styrene	0.010	mg/L	C	U	0.010	mg/L	C	U	0.010	mg/L	C	U
Tetrachloroethene	0.010	mg/L	C	U	0.010	mg/L	C	U	0.010	mg/L	C	U
Toluene	0.010	mg/L	C	U	0.010	mg/L	C	U	0.001	mg/L	C	J
Trichloroethene	0.010	mg/L	C	U	0.010	mg/L	C	U	0.010	mg/L	C	U
Vinyl Acetate	0.010	mg/L	C	U	0.010	mg/L	C	U	0.010	mg/L	C	U
Vinyl chloride	0.010	mg/L	C	U	0.010	mg/L	C	U	0.010	mg/L	C	U
Xylenes, Total	0.010	mg/L	C	U	0.010	mg/L	C	U	0.010	mg/L	C	U
cis-1,3-Dichloropropene	0.010	mg/L	C	U	0.010	mg/L	C	U	0.010	mg/L	C	U
trans-1,3-Dichloropropene	0.010	mg/L	C	U	0.010	mg/L	C	U	0.010	mg/L	C	U
Semivolatile Organics												
1,2,4-Trichlorobenzene	NA				0.010	mg/L	C	UJ	0.010	mg/L	C	UJ
1,2-Dichlorobenzene	NA				0.010	mg/L	C	U	0.010	mg/L	C	U
1,3-Dichlorobenzene	NA				0.010	mg/L	C	U	0.010	mg/L	C	U
1,4-Dichlorobenzene	NA				0.010	mg/L	C	U	0.010	mg/L	C	U
2,4,5-Trichlorophenol	NA				0.025	mg/L	C	U	0.025	mg/L	C	U
2,4,6-Trichlorophenol	NA				0.010	mg/L	C	U	0.010	mg/L	C	U
2,4-Dichlorophenol	NA				0.010	mg/L	C	U	0.010	mg/L	C	U
2,4-Dimethylphenol	NA				0.010	mg/L	C	U	0.010	mg/L	C	U
2,4-Dinitrophenol	NA				0.025	mg/L	C	U	0.025	mg/L	C	U
2,4-Dinitrotoluene	NA				0.010	mg/L	C	U	0.010	mg/L	C	U
2,6-Dinitrotoluene	NA				0.010	mg/L	C	U	0.010	mg/L	C	U
2-Chloronaphthalene	NA				0.010	mg/L	C	U	0.010	mg/L	C	U
2-Chlorophenol	NA				0.010	mg/L	C	U	0.010	mg/L	C	U
2-Methylnaphthalene	NA				0.010	mg/L	C	U	0.010	mg/L	C	U
2-Methylphenol	NA				0.010	mg/L	C	U	0.010	mg/L	C	U
2-Nitroaniline	NA				0.025	mg/L	C	UJ	0.025	mg/L	C	UJ
2-Nitrophenol	NA				0.010	mg/L	C	U	0.010	mg/L	C	U
3,3'-Dichlorobenzidine	NA				0.010	mg/L	C	UJ	0.010	mg/L	C	UJ

TABLE E-14
(Continued)

PHASE II - CHEMICAL PARAMETERS

QC TYPE	FIELD BLANK					FIELD BLANK					RINSATE				
SAMPLE NUMBER	111807					111809					111808				
ASSOCIATED SAMPLES	111794, 111795, 111796, 111806					111812, 111813, 111815					111812, 111813, 111815				
SAMPLING DATE	04/16/93					04/17/93					04/17/93				
CHEMICAL PARAMETERS	RESULTS	UNITS	L	VQ		RESULTS	UNITS	L	VQ		RESULTS	UNITS	L	VQ	
Semivolatile Organics															
3-Nitroaniline	NA					0.025	mg/L	C	U		0.025	mg/L	C	UJ	
4,6-Dinitro-2-methylphenol	NA					0.025	mg/L	C	U		0.025	mg/L	C	U	
4-Bromophenyl phenyl ether	NA					0.010	mg/L	C	U		0.010	mg/L	C	U	
4-Chloro-3-methylphenol	NA					0.010	mg/L	C	U		0.010	mg/L	C	U	
4-Chlorophenylphenyl ether	NA					0.010	mg/L	C	U		0.010	mg/L	C	U	
4-Methylphenol	NA					0.010	mg/L	C	UJ		0.010	mg/L	C	UJ	
4-Nitroaniline	NA					0.025	mg/L	C	UJ		0.025	mg/L	C	UJ	
4-Nitrophenol	NA					0.025	mg/L	C	UJ		0.025	mg/L	C	UJ	
Acenaphthene	NA					0.010	mg/L	C	U		0.010	mg/L	C	U	
Acenaphthylene	NA					0.010	mg/L	C	U		0.010	mg/L	C	U	
Anthracene	NA					0.010	mg/L	C	U		0.010	mg/L	C	U	
Benzo(a)anthracene	NA					0.010	mg/L	C	U		0.010	mg/L	C	U	
Benzo(a)pyrene	NA					0.010	mg/L	C	U		0.010	mg/L	C	U	
Benzo(b)fluoranthene	NA					0.010	mg/L	C	U		0.010	mg/L	C	U	
Benzo(g,h,i)perylene	NA					0.010	mg/L	C	U		0.010	mg/L	C	U	
Benzo(k)fluoranthene	NA					0.010	mg/L	C	UJ		0.010	mg/L	C	UJ	
Benzoic acid	NA					0.050	mg/L	C	U		0.050	mg/L	C	U	
Benzyl alcohol	NA					0.010	mg/L	C	U		0.010	mg/L	C	U	
Butyl benzyl phthalate	NA					0.010	mg/L	C	U		0.010	mg/L	C	U	
Carbazole	NA					0.010	mg/L	C	U		0.010	mg/L	C	U	
Chrysene	NA					0.010	mg/L	C	U		0.010	mg/L	C	U	
Di-n-butyl phthalate	NA					0.010	mg/L	C	U		0.010	mg/L	C	U	
Di-n-octyl phthalate	NA					0.010	mg/L	C	U		0.010	mg/L	C	U	
Dibenzo(a,h)anthracene	NA					0.010	mg/L	C	U		0.010	mg/L	C	U	
Dibenzofuran	NA					0.010	mg/L	C	U		0.010	mg/L	C	U	
Diethyl phthalate	NA					0.010	mg/L	C	U		0.010	mg/L	C	U	
Dimethyl phthalate	NA					0.010	mg/L	C	U		0.010	mg/L	C	U	
Fluoranthene	NA					0.010	mg/L	C	U		0.010	mg/L	C	U	
Fluorene	NA					0.010	mg/L	C	U		0.010	mg/L	C	U	
Hexachlorobenzene	NA					0.010	mg/L	C	U		0.010	mg/L	C	U	
Hexachlorobutadiene	NA					0.010	mg/L	C	R		0.010	mg/L	C	R	
Hexachlorocyclopentadiene	NA					0.010	mg/L	C	U		0.010	mg/L	C	U	
Hexachloroethane	NA					0.010	mg/L	C	U		0.010	mg/L	C	U	
Indeno(1,2,3-cd)pyrene	NA					0.010	mg/L	C	U		0.010	mg/L	C	U	
Isophorone	NA					0.010	mg/L	C	U		0.010	mg/L	C	U	
N-Nitroso-di-n-propylamine	NA					0.010	mg/L	C	U		0.010	mg/L	C	U	
N-Nitrosodiphenylamine	NA					0.010	mg/L	C	U		0.010	mg/L	C	U	
Naphthalene	NA					0.010	mg/L	C	U		0.010	mg/L	C	U	
Nitrobenzene	NA					0.010	mg/L	C	U		0.010	mg/L	C	U	
Pentachlorophenol	NA					0.025	mg/L	C	U		0.025	mg/L	C	U	
Phenanthrene	NA					0.010	mg/L	C	U		0.010	mg/L	C	U	
Phenol	NA					0.010	mg/L	C	U		0.010	mg/L	C	U	

TABLE E-14
(Continued)

PHASE II - CHEMICAL PARAMETERS

QC TYPE	FIELD BLANK				FIELD BLANK				RINSATE			
SAMPLE NUMBER	111807				111809				111808			
ASSOCIATED SAMPLES	111794, 111795, 111796, 111806				111812, 111813, 111815				111812, 111813, 111815			
SAMPLING DATE	04/16/93				04/17/93				04/17/93			
CHEMICAL PARAMETERS	RESULTS	UNITS	L	VQ	RESULTS	UNITS	L	VQ	RESULTS	UNITS	L	VQ
Semivolatile Organics												
Pyrene	NA				0.010	mg/L	C	U	0.010	mg/L	C	U
bis(2-Chloroethoxy)methane	NA				0.010	mg/L	C	U	0.010	mg/L	C	U
bis(2-Chloroethyl)ether	NA				0.010	mg/L	C	U	0.010	mg/L	C	U
bis(2-Chloroisopropyl) ether	NA				0.010	mg/L	C	UJ	0.010	mg/L	C	UJ
bis(2-Ethylhexyl) phthalate	NA				0.010	mg/L	C	U	0.010	mg/L	C	U
p-Chloroaniline	NA				0.010	mg/L	C	UJ	0.010	mg/L	C	UJ
Pesticide Organics/PCBs												
4,4'-DDD	NA				0.000	mg/L	C	UJ	0.000	mg/L	C	UJ
4,4'-DDE	NA				0.000	mg/L	C	U	0.000	mg/L	C	U
4,4'-DDT	NA				0.000	mg/L	C	U	0.000	mg/L	C	U
Aldrin	NA				0.000	mg/L	C	U	0.000	mg/L	C	U
Aroclor-1016	NA				0.001	mg/L	C	U	0.001	mg/L	C	U
Aroclor-1221	NA				0.002	mg/L	C	U	0.002	mg/L	C	U
Aroclor-1232	NA				0.001	mg/L	C	U	0.001	mg/L	C	U
Aroclor-1242	NA				0.001	mg/L	C	U	0.001	mg/L	C	U
Aroclor-1248	NA				0.001	mg/L	C	U	0.001	mg/L	C	U
Aroclor-1254	NA				0.001	mg/L	C	U	0.001	mg/L	C	U
Aroclor-1260	NA				0.001	mg/L	C	U	0.001	mg/L	C	U
Dieldrin	NA				0.000	mg/L	C	U	0.000	mg/L	C	U
Endosulfan II	NA				0.000	mg/L	C	U	0.000	mg/L	C	U
Endosulfan sulfate	NA				0.000	mg/L	C	U	0.000	mg/L	C	U
Endosulfan-I	NA				0.000	mg/L	C	U	0.000	mg/L	C	U
Endrin	NA				0.000	mg/L	C	U	0.000	mg/L	C	U
Endrin aldehyde	NA				0.000	mg/L	C	U	0.000	mg/L	C	U
Endrin ketone	NA				0.000	mg/L	C	U	0.000	mg/L	C	U
Heptachlor	NA				0.000	mg/L	C	U	0.000	mg/L	C	U
Heptachlor epoxide	NA				0.000	mg/L	C	U	0.000	mg/L	C	U
Methoxychlor	NA				0.001	mg/L	C	U	0.001	mg/L	C	U
Toxaphene	NA				0.005	mg/L	C	U	0.005	mg/L	C	U
alpha-BHC	NA				0.000	mg/L	C	U	0.000	mg/L	C	U
alpha-Chlordane	NA				0.000	mg/L	C	U	0.000	mg/L	C	U
beta-BHC	NA				0.000	mg/L	C	U	0.000	mg/L	C	U
delta-BHC	NA				0.000	mg/L	C	U	0.000	mg/L	C	U
gamma-BHC (Lindane)	NA				0.000	mg/L	C	U	0.000	mg/L	C	U
gamma-Chlordane	NA				0.000	mg/L	C	U	0.000	mg/L	C	U
General Chemistry												
Alkalinity	NA				1.000	mg/L	B	U	NA			
Ammonia	NA				0.100	mg/L	B	U	NA			

TABLE E-14
(Continued)

PHASE II - CHEMICAL PARAMETERS

QC TYPE	FIELD BLANK	FIELD BLANK	RINSATE
SAMPLE NUMBER	111807	111809	111808
ASSOCIATED SAMPLES	111794, 111795, 111796, 111806	111812, 111813, 111815	111812, 111813, 111815
SAMPLING DATE	04/16/93	04/17/93	04/17/93

CHEMICAL PARAMETERS	RESULTS	UNITS	L	VQ	RESULTS	UNITS	L	VQ	RESULTS	UNITS	L	VQ
General Chemistry												
Chloride	NA				0.500	mg/L	B	U	NA			
Fluoride	NA				0.050	mg/L	B	U	NA			
Nitrate	NA				0.100	mg/L	B	R	NA			
Phenols	NA				0.010	mg/L	B	U	NA			
Phosphorus	NA				0.020	mg/L	B	U	NA			
Sulfate	NA				2.000	mg/L	B	U	NA			
Sulfide	NA				0.500	mg/L	B	U	NA			
Total Kjeldahl Nitrogen	NA				0.100	mg/L	B	U	NA			
Total Organic Carbon	NA				1.000	mg/L	B	U	NA			
Total Organic Halides	NA				0.010	mg/L	B	U	NA			
Total Organic Nitrogen	NA				0.100	mg/L	B	U	NA			

TABLE E-14
(Continued)

PHASE II - CHEMICAL PARAMETERS

QC TYPE	TRIP BLANK				TRIP BLANK				TRIP BLANK			
SAMPLE NUMBER	110891				111491				111797			
ASSOCIATED SAMPLES	110892				111489				111790, 111791			
SAMPLING DATE	04/27/93				04/17/93				04/16/93			
CHEMICAL PARAMETERS	RESULTS	UNITS	L	VQ	RESULTS	UNITS	L	VQ	RESULTS	UNITS	L	VQ
Volatile Organics												
1,1,1-Trichloroethane	0.010	mg/L	C	U	0.010	mg/L	C	U	0.010	mg/L	C	U
1,1,2,2-Tetrachloroethane	0.010	mg/L	C	U	0.010	mg/L	C	U	0.010	mg/L	C	U
1,1,2-Trichloroethane	0.010	mg/L	C	U	0.010	mg/L	C	U	0.010	mg/L	C	U
1,1-Dichloroethane	0.010	mg/L	C	U	0.010	mg/L	C	U	0.010	mg/L	C	U
1,1-Dichloroethene	0.010	mg/L	C	U	0.010	mg/L	C	U	0.010	mg/L	C	U
1,2-Dichloroethane	0.010	mg/L	C	U	0.010	mg/L	C	U	0.010	mg/L	C	U
1,2-Dichloroethene	0.010	mg/L	C	U	0.010	mg/L	C	U	0.010	mg/L	C	U
1,2-Dichloropropane	0.010	mg/L	C	U	0.010	mg/L	C	U	0.010	mg/L	C	U
2-Butanone	0.010	mg/L	C	U	0.010	mg/L	C	U	0.004	mg/L	C	J
2-Hexanone	0.010	mg/L	C	UJ	0.010	mg/L	C	U	0.003	mg/L	C	J
4-Methyl-2-pentanone	0.010	mg/L	C	U	0.010	mg/L	C	U	0.002	mg/L	C	J
Acetone	0.005	mg/L	C	U	0.034	mg/L	C	U	0.018	mg/L	C	-
Benzene	0.010	mg/L	C	U	0.010	mg/L	C	U	0.010	mg/L	C	U
Bromodichloromethane	0.010	mg/L	C	U	0.010	mg/L	C	U	0.010	mg/L	C	U
Bromoform	0.010	mg/L	C	U	0.010	mg/L	C	U	0.010	mg/L	C	U
Bromomethane	0.010	mg/L	C	U	0.010	mg/L	C	U	0.010	mg/L	C	U
Carbon Tetrachloride	0.010	mg/L	C	U	0.010	mg/L	C	U	0.010	mg/L	C	U
Carbon disulfide	0.010	mg/L	C	U	0.010	mg/L	C	U	0.010	mg/L	C	U
Chlorobenzene	0.010	mg/L	C	U	0.010	mg/L	C	U	0.010	mg/L	C	U
Chloroethane	0.010	mg/L	C	U	0.005	mg/L	C	J	0.005	mg/L	C	J
Chloroform	0.010	mg/L	C	U	0.010	mg/L	C	U	0.010	mg/L	C	U
Chloromethane	0.010	mg/L	C	UJ	0.010	mg/L	C	U	0.010	mg/L	C	U
Dibromochloromethane	0.010	mg/L	C	U	0.010	mg/L	C	U	0.010	mg/L	C	U
Ethylbenzene	0.010	mg/L	C	U	0.010	mg/L	C	U	0.010	mg/L	C	U
Methylene chloride	0.010	mg/L	C	UJ	0.036	mg/L	C	UJ	0.010	mg/L	C	UJ
Styrene	0.010	mg/L	C	U	0.010	mg/L	C	U	0.010	mg/L	C	U
Tetrachloroethene	0.010	mg/L	C	U	0.010	mg/L	C	U	0.010	mg/L	C	U
Toluene	0.010	mg/L	C	U	0.010	mg/L	C	U	0.010	mg/L	C	U
Trichloroethene	0.010	mg/L	C	U	0.010	mg/L	C	U	0.010	mg/L	C	U
Vinyl Acetate	0.010	mg/L	C	U	0.010	mg/L	C	U	0.010	mg/L	C	U
Vinyl chloride	0.010	mg/L	C	UJ	0.010	mg/L	C	U	0.010	mg/L	C	U
Xylenes, Total	0.010	mg/L	C	U	0.010	mg/L	C	U	0.010	mg/L	C	U
cis-1,3-Dichloropropene	0.010	mg/L	C	U	0.010	mg/L	C	U	0.010	mg/L	C	U
trans-1,3-Dichloropropene	0.010	mg/L	C	U	0.010	mg/L	C	U	0.010	mg/L	C	U

0285

5174

TABLE E-14
(Continued)

PHASE II - CHEMICAL PARAMETERS

QC TYPE	TRIP BLANK	TRIP BLANK	TRIP BLANK
SAMPLE NUMBER	111798	111814	111821
ASSOCIATED SAMPLES	111792, 111793	111812, 111813, 111815, 111809	111820
SAMPLING DATE	04/16/93	04/17/93	04/21/93

CHEMICAL PARAMETERS	RESULTS	UNITS	L	VQ	RESULTS	UNITS	L	VQ	RESULTS	UNITS	L	VQ
Volatile Organics												
1,1,1-Trichloroethane	0.010	mg/L	C	U	0.010	mg/L	C	U	0.010	mg/L	C	U
1,1,2,2-Tetrachloroethane	0.010	mg/L	C	U	0.010	mg/L	C	U	0.010	mg/L	C	U
1,1,2-Trichloroethane	0.010	mg/L	C	U	0.010	mg/L	C	U	0.010	mg/L	C	U
1,1-Dichloroethane	0.010	mg/L	C	U	0.010	mg/L	C	U	0.010	mg/L	C	U
1,1-Dichloroethene	0.010	mg/L	C	U	0.010	mg/L	C	U	0.010	mg/L	C	U
1,2-Dichloroethane	0.010	mg/L	C	U	0.010	mg/L	C	U	0.010	mg/L	C	U
1,2-Dichloroethene	0.010	mg/L	C	U	0.010	mg/L	C	U	0.010	mg/L	C	U
1,2-Dichloropropane	0.010	mg/L	C	U	0.010	mg/L	C	U	0.010	mg/L	C	U
2-Butanone	0.010	mg/L	C	U	0.010	mg/L	C	U	0.010	mg/L	C	U
2-Hexanone	0.010	mg/L	C	UJ	0.010	mg/L	C	U	0.010	mg/L	C	UJ
4-Methyl-2-pentanone	0.010	mg/L	C	U	0.010	mg/L	C	U	0.010	mg/L	C	UJ
Acetone	0.010	mg/L	C	U	0.036	mg/L	C	U	0.010	mg/L	C	U
Benzene	0.010	mg/L	C	U	0.010	mg/L	C	U	0.010	mg/L	C	U
Bromodichloromethane	0.010	mg/L	C	U	0.010	mg/L	C	U	0.010	mg/L	C	U
Bromoform	0.010	mg/L	C	U	0.010	mg/L	C	U	0.010	mg/L	C	U
Bromomethane	0.010	mg/L	C	U	0.010	mg/L	C	U	0.010	mg/L	C	U
Carbon Tetrachloride	0.010	mg/L	C	U	0.010	mg/L	C	U	0.010	mg/L	C	U
Carbon disulfide	0.010	mg/L	C	U	0.002	mg/L	C	J	0.010	mg/L	C	U
Chlorobenzene	0.010	mg/L	C	U	0.010	mg/L	C	U	0.010	mg/L	C	U
Chloroethane	0.002	mg/L	C	J	0.004	mg/L	C	J	0.010	mg/L	C	U
Chloroform	0.010	mg/L	C	U	0.010	mg/L	C	U	0.010	mg/L	C	U
Chloromethane	0.010	mg/L	C	U	0.010	mg/L	C	U	0.010	mg/L	C	U
Dibromochloromethane	0.010	mg/L	C	U	0.010	mg/L	C	U	0.010	mg/L	C	U
Ethylbenzene	0.010	mg/L	C	U	0.010	mg/L	C	U	0.010	mg/L	C	U
Methylene chloride	0.010	mg/L	C	UJ	0.030	mg/L	C	UJ	0.010	mg/L	C	UJ
Styrene	0.010	mg/L	C	U	0.010	mg/L	C	U	0.010	mg/L	C	U
Tetrachloroethene	0.010	mg/L	C	U	0.010	mg/L	C	U	0.010	mg/L	C	U
Toluene	0.010	mg/L	C	U	0.010	mg/L	C	U	0.010	mg/L	C	U
Trichloroethene	0.010	mg/L	C	U	0.010	mg/L	C	U	0.010	mg/L	C	U
Vinyl Acetate	0.010	mg/L	C	U	0.010	mg/L	C	U	0.010	mg/L	C	U
Vinyl chloride	0.010	mg/L	C	U	0.010	mg/L	C	U	0.010	mg/L	C	U
Xylenes, Total	0.010	mg/L	C	U	0.010	mg/L	C	U	0.010	mg/L	C	U
cis-1,3-Dichloropropene	0.010	mg/L	C	U	0.010	mg/L	C	U	0.010	mg/L	C	U
trans-1,3-Dichloropropene	0.010	mg/L	C	U	0.010	mg/L	C	U	0.010	mg/L	C	U

TABLE E-14
(Continued)

PHASE II - CHEMICAL PARAMETERS

QC TYPE	TRIP BLANK					TRIP BLANK					TRIP BLANK				
SAMPLE NUMBER	111825					111827					112010				
ASSOCIATED SAMPLES	111819					111828					111996				
SAMPLING DATE	04/21/93					04/26/93					04/29/93				
CHEMICAL PARAMETERS	RESULTS	UNITS	L	VQ		RESULTS	UNITS	L	VQ		RESULTS	UNITS	L	VQ	
Volatile Organics															
1,1,1-Trichloroethane	0.010	mg/L	C	U		0.010	mg/L	C	U		0.010	mg/L	C	U	
1,1,2,2-Tetrachloroethane	0.010	mg/L	C	U		0.010	mg/L	C	U		0.010	mg/L	C	U	
1,1,2-Trichloroethane	0.010	mg/L	C	U		0.010	mg/L	C	U		0.010	mg/L	C	U	
1,1-Dichloroethane	0.010	mg/L	C	U		0.010	mg/L	C	U		0.010	mg/L	C	U	
1,1-Dichloroethene	0.010	mg/L	C	U		0.010	mg/L	C	U		0.010	mg/L	C	U	
1,2-Dichloroethane	0.010	mg/L	C	U		0.010	mg/L	C	U		0.010	mg/L	C	U	
1,2-Dichloroethene	0.010	mg/L	C	U		0.010	mg/L	C	U		0.010	mg/L	C	U	
1,2-Dichloropropane	0.010	mg/L	C	U		0.010	mg/L	C	U		0.010	mg/L	C	U	
2-Butanone	0.010	mg/L	C	U		0.010	mg/L	C	U		0.010	mg/L	C	U	
2-Hexanone	0.010	mg/L	C	UJ		0.010	mg/L	C	UJ		0.010	mg/L	C	UJ	
4-Methyl-2-pentanone	0.010	mg/L	C	UJ		0.010	mg/L	C	U		0.010	mg/L	C	U	
Acetone	0.042	mg/L	C	-		0.010	mg/L	C	U		0.010	mg/L	C	U	
Benzene	0.010	mg/L	C	U		0.010	mg/L	C	U		0.010	mg/L	C	U	
Bromodichloromethane	0.010	mg/L	C	U		0.010	mg/L	C	U		0.010	mg/L	C	U	
Bromoform	0.010	mg/L	C	U		0.010	mg/L	C	U		0.010	mg/L	C	U	
Bromomethane	0.010	mg/L	C	U		0.010	mg/L	C	U		0.010	mg/L	C	U	
Carbon Tetrachloride	0.010	mg/L	C	U		0.010	mg/L	C	U		0.010	mg/L	C	U	
Carbon disulfide	0.010	mg/L	C	U		0.010	mg/L	C	U		0.010	mg/L	C	UJ	
Chlorobenzene	0.010	mg/L	C	U		0.010	mg/L	C	U		0.010	mg/L	C	U	
Chloroethane	0.003	mg/L	C	J		0.010	mg/L	C	U		0.010	mg/L	C	UJ	
Chloroform	0.010	mg/L	C	U		0.010	mg/L	C	U		0.010	mg/L	C	U	
Chloromethane	0.010	mg/L	C	U		0.010	mg/L	C	UJ		0.010	mg/L	C	UJ	
Dibromochloromethane	0.010	mg/L	C	U		0.010	mg/L	C	U		0.010	mg/L	C	U	
Ethylbenzene	0.010	mg/L	C	U		0.010	mg/L	C	U		0.010	mg/L	C	U	
Methylene chloride	0.010	mg/L	C	UJ		0.010	mg/L	C	UJ		0.011	mg/L	C	UJ	
Styrene	0.010	mg/L	C	U		0.010	mg/L	C	U		0.010	mg/L	C	U	
Tetrachloroethene	0.010	mg/L	C	U		0.010	mg/L	C	U		0.010	mg/L	C	U	
Toluene	0.010	mg/L	C	U		0.010	mg/L	C	U		0.010	mg/L	C	U	
Trichloroethene	0.010	mg/L	C	U		0.010	mg/L	C	U		0.010	mg/L	C	U	
Vinyl Acetate	0.010	mg/L	C	U		0.010	mg/L	C	U		0.010	mg/L	C	U	
Vinyl chloride	0.010	mg/L	C	U		0.010	mg/L	C	UJ		0.010	mg/L	C	U	
Xylenes, Total	0.010	mg/L	C	U		0.010	mg/L	C	U		0.010	mg/L	C	U	
cis-1,3-Dichloropropene	0.010	mg/L	C	U		0.010	mg/L	C	U		0.010	mg/L	C	U	
trans-1,3-Dichloropropene	0.010	mg/L	C	U		0.010	mg/L	C	U		0.010	mg/L	C	U	

TABLE E-14
(Continued)

PHASE II - CHEMICAL PARAMETERS

QC TYPE	TRIP BLANK				TRIP BLANK				TRIP BLANK			
SAMPLE NUMBER	112016				112018				112020			
ASSOCIATED SAMPLES	112017				112015				112021			
SAMPLING DATE	04/29/93				04/29/93				04/30/93			
CHEMICAL PARAMETERS	RESULTS	UNITS	L	VQ	RESULTS	UNITS	L	VQ	RESULTS	UNITS	L	VQ
Volatile Organics												
1,1,1-Trichloroethane	0.010	mg/L	C	U	0.010	mg/L	C	U	0.010	mg/L	C	U
1,1,2,2-Tetrachloroethane	0.010	mg/L	C	U	0.010	mg/L	C	U	0.010	mg/L	C	UJ
1,1,2-Trichloroethane	0.010	mg/L	C	U	0.010	mg/L	C	U	0.010	mg/L	C	U
1,1-Dichloroethane	0.010	mg/L	C	U	0.010	mg/L	C	U	0.010	mg/L	C	U
1,1-Dichloroethene	0.010	mg/L	C	U	0.010	mg/L	C	U	0.010	mg/L	C	U
1,2-Dichloroethane	0.010	mg/L	C	U	0.010	mg/L	C	U	0.010	mg/L	C	U
1,2-Dichloroethene	0.010	mg/L	C	U	0.010	mg/L	C	U	0.010	mg/L	C	U
1,2-Dichloropropane	0.010	mg/L	C	U	0.010	mg/L	C	U	0.010	mg/L	C	U
2-Butanone	0.010	mg/L	C	UJ	0.010	mg/L	C	U	0.010	mg/L	C	UJ
2-Hexanone	0.010	mg/L	C	U	0.010	mg/L	C	UJ	0.010	mg/L	C	UJ
4-Methyl-2-pentanone	0.010	mg/L	C	U	0.010	mg/L	C	U	0.010	mg/L	C	UJ
Acetone	0.010	mg/L	C	U	0.010	mg/L	C	U	0.010	mg/L	C	R
Benzene	0.010	mg/L	C	U	0.010	mg/L	C	U	0.010	mg/L	C	U
Bromodichloromethane	0.010	mg/L	C	U	0.010	mg/L	C	U	0.010	mg/L	C	U
Bromoform	0.010	mg/L	C	U	0.010	mg/L	C	U	0.010	mg/L	C	U
Bromomethane	0.010	mg/L	C	U	0.010	mg/L	C	U	0.010	mg/L	C	U
Carbon Tetrachloride	0.010	mg/L	C	U	0.010	mg/L	C	U	0.010	mg/L	C	U
Carbon disulfide	0.010	mg/L	C	U	0.010	mg/L	C	U	0.010	mg/L	C	U
Chlorobenzene	0.010	mg/L	C	U	0.010	mg/L	C	U	0.010	mg/L	C	U
Chloroethane	0.010	mg/L	C	U	0.010	mg/L	C	U	0.010	mg/L	C	U
Chloroform	0.010	mg/L	C	U	0.010	mg/L	C	U	0.010	mg/L	C	U
Chloromethane	0.010	mg/L	C	U	0.010	mg/L	C	UJ	0.010	mg/L	C	U
Dibromochloromethane	0.010	mg/L	C	U	0.010	mg/L	C	U	0.010	mg/L	C	U
Ethylbenzene	0.010	mg/L	C	U	0.010	mg/L	C	U	0.010	mg/L	C	U
Methylene chloride	0.005	mg/L	C	J	0.010	mg/L	C	U	0.010	mg/L	C	U
Styrene	0.010	mg/L	C	U	0.010	mg/L	C	U	0.010	mg/L	C	U
Tetrachloroethene	0.010	mg/L	C	U	0.010	mg/L	C	U	0.010	mg/L	C	U
Toluene	0.010	mg/L	C	U	0.010	mg/L	C	U	0.010	mg/L	C	U
Trichloroethene	0.010	mg/L	C	U	0.010	mg/L	C	U	0.010	mg/L	C	U
Vinyl Acetate	NA				0.010	mg/L	C	U	NA			
Vinyl chloride	0.010	mg/L	C	U	0.010	mg/L	C	UJ	0.010	mg/L	C	U
Xylenes, Total	0.010	mg/L	C	U	0.010	mg/L	C	U	0.010	mg/L	C	U
cis-1,3-Dichloropropene	0.010	mg/L	C	U	0.010	mg/L	C	U	0.010	mg/L	C	U
trans-1,3-Dichloropropene	0.010	mg/L	C	U	0.010	mg/L	C	U	0.010	mg/L	C	U

TABLE E-14
(Continued)

PHASE II - CHEMICAL PARAMETERS

QC TYPE	TRIP BLANK					TRIP BLANK					TRIP BLANK				
SAMPLE NUMBER	112023					112025					112028				
ASSOCIATED SAMPLES	112022					116219					112027				
SAMPLING DATE	04/30/93					05/01/93					05/01/93				
CHEMICAL PARAMETERS	RESULTS	UNITS	L	VQ		RESULTS	UNITS	L	VQ		RESULTS	UNITS	L	VQ	
Volatile Organics															
1,1,1-Trichloroethane	0.010	mg/L	C	U		0.010	mg/L	C	U		0.010	mg/L	C	U	
1,1,2,2-Tetrachloroethane	0.010	mg/L	C	U		0.010	mg/L	C	U		0.010	mg/L	C	U	
1,1,2-Trichloroethane	0.010	mg/L	C	U		0.010	mg/L	C	U		0.010	mg/L	C	U	
1,1-Dichloroethane	0.010	mg/L	C	U		0.010	mg/L	C	U		0.010	mg/L	C	U	
1,1-Dichloroethene	0.010	mg/L	C	U		0.010	mg/L	C	U		0.010	mg/L	C	U	
1,2-Dichloroethane	0.010	mg/L	C	U		0.010	mg/L	C	U		0.010	mg/L	C	U	
1,2-Dichloroethene	0.010	mg/L	C	U		0.010	mg/L	C	U		0.010	mg/L	C	U	
1,2-Dichloropropane	0.010	mg/L	C	U		0.010	mg/L	C	U		0.010	mg/L	C	U	
2-Butanone	0.010	mg/L	C	U		0.010	mg/L	C	U		0.010	mg/L	C	U	
2-Hexanone	0.010	mg/L	C	UJ		0.010	mg/L	C	U		0.010	mg/L	C	UJ	
4-Methyl-2-pentanone	0.010	mg/L	C	U		0.010	mg/L	C	U		0.010	mg/L	C	U	
Acetone	0.010	mg/L	C	U		0.006	mg/L	C	J		0.010	mg/L	C	U	
Benzene	0.010	mg/L	C	U		0.010	mg/L	C	U		0.010	mg/L	C	U	
Bromodichloromethane	0.010	mg/L	C	U		0.010	mg/L	C	U		0.010	mg/L	C	U	
Bromoform	0.010	mg/L	C	U		0.010	mg/L	C	U		0.010	mg/L	C	U	
Bromomethane	0.010	mg/L	C	U		0.010	mg/L	C	U		0.010	mg/L	C	U	
Carbon Tetrachloride	0.010	mg/L	C	U		0.010	mg/L	C	U		0.010	mg/L	C	U	
Carbon disulfide	0.010	mg/L	C	UJ		0.010	mg/L	C	UJ		0.010	mg/L	C	UJ	
Chlorobenzene	0.010	mg/L	C	U		0.010	mg/L	C	U		0.010	mg/L	C	U	
Chloroethane	0.010	mg/L	C	UJ		0.010	mg/L	C	UJ		0.010	mg/L	C	UJ	
Chloroform	0.010	mg/L	C	U		0.010	mg/L	C	U		0.010	mg/L	C	U	
Chloromethane	0.010	mg/L	C	UJ		0.010	mg/L	C	UJ		0.010	mg/L	C	UJ	
Dibromochloromethane	0.010	mg/L	C	U		0.010	mg/L	C	U		0.010	mg/L	C	U	
Ethylbenzene	0.010	mg/L	C	U		0.010	mg/L	C	U		0.010	mg/L	C	U	
Methylene chloride	0.010	mg/L	C	UJ		0.010	mg/L	C	UJ		0.010	mg/L	C	UJ	
Styrene	0.010	mg/L	C	U		0.010	mg/L	C	U		0.010	mg/L	C	U	
Tetrachloroethene	0.010	mg/L	C	U		0.010	mg/L	C	U		0.010	mg/L	C	U	
Toluene	0.010	mg/L	C	U		0.010	mg/L	C	U		0.010	mg/L	C	U	
Trichloroethene	0.010	mg/L	C	U		0.010	mg/L	C	U		0.010	mg/L	C	U	
Vinyl Acetate	0.010	mg/L	C	U		0.010	mg/L	C	U		0.010	mg/L	C	U	
Vinyl chloride	0.010	mg/L	C	U		0.010	mg/L	C	U		0.010	mg/L	C	U	
Xylenes, Total	0.010	mg/L	C	U		0.010	mg/L	C	U		0.010	mg/L	C	U	
cis-1,3-Dichloropropene	0.010	mg/L	C	U		0.010	mg/L	C	U		0.010	mg/L	C	U	
trans-1,3-Dichloropropene	0.010	mg/L	C	U		0.010	mg/L	C	U		0.010	mg/L	C	U	

0289

5174

TABLE E-14
(Continued)

PHASE II - CHEMICAL PARAMETERS

QC TYPE	TRIP BLANK	TRIP BLANK	TRIP BLANK
SAMPLE NUMBER	112068	112069	113303
ASSOCIATED SAMPLES	112045, 112054, 112057 112065, 116074, 116075	112073, 112077, 112082 112084, 112081, 112087	116225, 116226
SAMPLING DATE	04/28/93	04/29/93	05/05/93

CHEMICAL PARAMETERS	RESULTS	UNITS	L	VQ	RESULTS	UNITS	L	VQ	RESULTS	UNITS	L	VQ
Volatile Organics												
1,1,1-Trichloroethane	0.010	mg/L	C	UJ	0.010	mg/L	C	UJ	0.010	mg/L	C	U
1,1,2,2-Tetrachloroethane	0.010	mg/L	C	UJ	0.010	mg/L	C	UJ	0.010	mg/L	C	U
1,1,2-Trichloroethane	0.010	mg/L	C	UJ	0.010	mg/L	C	UJ	0.010	mg/L	C	U
1,1-Dichloroethane	0.010	mg/L	C	UJ	0.010	mg/L	C	UJ	0.010	mg/L	C	U
1,1-Dichloroethene	0.010	mg/L	C	UJ	0.010	mg/L	C	UJ	0.010	mg/L	C	U
1,2-Dichloroethane	0.010	mg/L	C	UJ	0.010	mg/L	C	UJ	0.010	mg/L	C	U
1,2-Dichloroethene	0.010	mg/L	C	UJ	0.010	mg/L	C	UJ	0.010	mg/L	C	U
1,2-Dichloropropane	0.010	mg/L	C	UJ	0.010	mg/L	C	UJ	0.010	mg/L	C	U
2-Butanone	0.010	mg/L	C	UJ	0.010	mg/L	C	UJ	0.010	mg/L	C	U
2-Hexanone	0.010	mg/L	C	UJ	0.010	mg/L	C	UJ	0.010	mg/L	C	U
4-Methyl-2-pentanone	0.010	mg/L	C	UJ	0.010	mg/L	C	UJ	0.010	mg/L	C	U
Acetone	0.014	mg/L	C	J	0.010	mg/L	C	UJ	0.010	mg/L	C	U
Benzene	0.010	mg/L	C	UJ	0.010	mg/L	C	UJ	0.010	mg/L	C	U
Bromodichloromethane	0.010	mg/L	C	UJ	0.010	mg/L	C	UJ	0.010	mg/L	C	U
Bromoform	0.010	mg/L	C	UJ	0.010	mg/L	C	UJ	0.010	mg/L	C	U
Bromomethane	0.010	mg/L	C	UJ	0.010	mg/L	C	UJ	0.010	mg/L	C	U
Carbon Tetrachloride	0.010	mg/L	C	UJ	0.010	mg/L	C	UJ	0.010	mg/L	C	U
Carbon disulfide	0.010	mg/L	C	UJ	0.010	mg/L	C	UJ	0.010	mg/L	C	U
Chlorobenzene	0.010	mg/L	C	UJ	0.010	mg/L	C	UJ	0.010	mg/L	C	U
Chloroethane	0.010	mg/L	C	UJ	0.010	mg/L	C	UJ	0.010	mg/L	C	U
Chloroform	0.010	mg/L	C	UJ	0.010	mg/L	C	UJ	0.010	mg/L	C	U
Chloromethane	0.010	mg/L	C	UJ	0.010	mg/L	C	UJ	0.010	mg/L	C	U
Dibromochloromethane	0.010	mg/L	C	UJ	0.010	mg/L	C	UJ	0.010	mg/L	C	U
Ethylbenzene	0.010	mg/L	C	UJ	0.010	mg/L	C	UJ	0.010	mg/L	C	U
Methylene chloride	0.010	mg/L	C	UJ	0.010	mg/L	C	UJ	0.010	mg/L	C	U
Styrene	0.010	mg/L	C	UJ	0.010	mg/L	C	UJ	0.010	mg/L	C	U
Tetrachloroethene	0.010	mg/L	C	UJ	0.010	mg/L	C	UJ	0.010	mg/L	C	U
Toluene	0.010	mg/L	C	UJ	0.010	mg/L	C	UJ	0.010	mg/L	C	U
Trichloroethene	0.010	mg/L	C	UJ	0.010	mg/L	C	UJ	0.010	mg/L	C	U
Vinyl Acetate	NA				NA				0.010	mg/L	C	U
Vinyl chloride	0.010	mg/L	C	UJ	0.010	mg/L	C	UJ	0.010	mg/L	C	U
Xylenes, Total	0.010	mg/L	C	UJ	0.010	mg/L	C	UJ	0.010	mg/L	C	U
cis-1,3-Dichloropropene	0.010	mg/L	C	UJ	0.010	mg/L	C	UJ	0.010	mg/L	C	U
trans-1,3-Dichloropropene	0.010	mg/L	C	UJ	0.010	mg/L	C	UJ	0.010	mg/L	C	U

TABLE E-14
(Continued)

PHASE II - CHEMICAL PARAMETERS

QC TYPE	TRIP BLANK					TRIP BLANK					TRIP BLANK				
SAMPLE NUMBER	113802					116076					116176				
ASSOCIATED SAMPLES	113801, 113798					116080, 116090, 116172, 116114					116177, 116192				
SAMPLING DATE	06/22/93					05/01/93					05/05/93				
CHEMICAL PARAMETERS	RESULTS	UNITS	L	VQ		RESULTS	UNITS	L	VQ		RESULTS	UNITS	L	VQ	
Volatile Organics															
1,1,1-Trichloroethane	0.010	mg/L	C	U		0.010	mg/L	C	U		0.010	mg/L	C	U	
1,1,2,2-Tetrachloroethane	0.010	mg/L	C	U		0.010	mg/L	C	U		0.010	mg/L	C	U	
1,1,2-Trichloroethane	0.010	mg/L	C	U		0.010	mg/L	C	U		0.010	mg/L	C	U	
1,1-Dichloroethane	0.010	mg/L	C	U		0.010	mg/L	C	U		0.010	mg/L	C	U	
1,1-Dichloroethene	0.010	mg/L	C	U		0.010	mg/L	C	U		0.010	mg/L	C	U	
1,2-Dichloroethane	0.010	mg/L	C	U		0.010	mg/L	C	U		0.010	mg/L	C	U	
1,2-Dichloroethene	0.010	mg/L	C	U		0.010	mg/L	C	U		0.010	mg/L	C	U	
1,2-Dichloropropane	0.010	mg/L	C	U		0.010	mg/L	C	U		0.010	mg/L	C	U	
2-Butanone	0.010	mg/L	C	U		0.010	mg/L	C	U		0.010	mg/L	C	U	
2-Hexanone	0.010	mg/L	C	U		0.010	mg/L	C	U		0.010	mg/L	C	U	
4-Methyl-2-pentanone	0.010	mg/L	C	U		0.010	mg/L	C	U		0.010	mg/L	C	U	
Acetone	0.010	mg/L	C	U		0.004	mg/L	C	J		0.010	mg/L	C	U	
Benzene	0.010	mg/L	C	U		0.010	mg/L	C	U		0.010	mg/L	C	U	
Bromodichloromethane	0.010	mg/L	C	U		0.010	mg/L	C	U		0.010	mg/L	C	U	
Bromoform	0.010	mg/L	C	U		0.010	mg/L	C	U		0.010	mg/L	C	U	
Bromomethane	0.010	mg/L	C	U		0.010	mg/L	C	U		0.010	mg/L	C	U	
Carbon Tetrachloride	0.010	mg/L	C	U		0.010	mg/L	C	U		0.010	mg/L	C	U	
Carbon disulfide	0.010	mg/L	C	U		0.010	mg/L	C	UJ		0.010	mg/L	C	UJ	
Chlorobenzene	0.010	mg/L	C	U		0.010	mg/L	C	U		0.010	mg/L	C	U	
Chloroethane	0.010	mg/L	C	U		0.010	mg/L	C	UJ		0.010	mg/L	C	UJ	
Chloroform	0.010	mg/L	C	U		0.010	mg/L	C	U		0.010	mg/L	C	U	
Chloromethane	0.010	mg/L	C	U		0.010	mg/L	C	UJ		0.010	mg/L	C	UJ	
Dibromochloromethane	0.010	mg/L	C	U		0.010	mg/L	C	U		0.010	mg/L	C	U	
Ethylbenzene	0.010	mg/L	C	U		0.010	mg/L	C	U		0.010	mg/L	C	U	
Methylene chloride	0.019	mg/L	C	U		0.010	mg/L	C	UJ		0.010	mg/L	C	UJ	
Styrene	0.010	mg/L	C	U		0.010	mg/L	C	U		0.010	mg/L	C	U	
Tetrachloroethene	0.010	mg/L	C	U		0.010	mg/L	C	U		0.010	mg/L	C	U	
Toluene	0.010	mg/L	C	U		0.010	mg/L	C	U		0.010	mg/L	C	U	
Trichloroethene	0.010	mg/L	C	U		0.010	mg/L	C	U		0.010	mg/L	C	U	
Vinyl Acetate	NA					0.010	mg/L	C	U		0.010	mg/L	C	U	
Vinyl chloride	0.010	mg/L	C	U		0.010	mg/L	C	U		0.010	mg/L	C	U	
Xylenes, Total	0.010	mg/L	C	U		0.010	mg/L	C	U		0.010	mg/L	C	U	
cis-1,3-Dichloropropene	0.010	mg/L	C	U		0.010	mg/L	C	U		0.010	mg/L	C	U	
trans-1,3-Dichloropropene	0.010	mg/L	C	U		0.010	mg/L	C	U		0.010	mg/L	C	U	

TABLE E-14
(Continued)

PHASE II - CHEMICAL PARAMETERS

QC TYPE	TRIP BLANK	TRIP BLANK	TRIP BLANK
SAMPLE NUMBER	116240	116251	116260
ASSOCIATED SAMPLES	116216, 116243	116252, 116257, 116256	116264
SAMPLING DATE	05/06/93	05/07/93	05/12/93

CHEMICAL PARAMETERS	RESULTS	UNITS	L	VQ	RESULTS	UNITS	L	VQ	RESULTS	UNITS	L	VQ
Volatile Organics												
1,1,1-Trichloroethane	0.010	mg/L	C	U	0.010	mg/L	C	U	0.010	mg/L	C	U
1,1,2,2-Tetrachloroethane	0.010	mg/L	C	U	0.010	mg/L	C	U	0.010	mg/L	C	U
1,1,2-Trichloroethane	0.010	mg/L	C	U	0.010	mg/L	C	U	0.010	mg/L	C	U
1,1-Dichloroethane	0.010	mg/L	C	U	0.010	mg/L	C	U	0.010	mg/L	C	U
1,1-Dichloroethene	0.010	mg/L	C	U	0.010	mg/L	C	U	0.010	mg/L	C	U
1,2-Dichloroethane	0.010	mg/L	C	U	0.010	mg/L	C	U	0.010	mg/L	C	U
1,2-Dichloroethene	0.010	mg/L	C	U	0.010	mg/L	C	U	0.010	mg/L	C	U
1,2-Dichloropropane	0.010	mg/L	C	U	0.010	mg/L	C	U	0.010	mg/L	C	U
2-Butanone	0.010	mg/L	C	U	0.010	mg/L	C	U	0.010	mg/L	C	U
2-Hexanone	0.010	mg/L	C	U	0.010	mg/L	C	U	0.010	mg/L	C	U
4-Methyl-2-pentanone	0.010	mg/L	C	U	0.010	mg/L	C	U	0.010	mg/L	C	U
Acetone	0.010	mg/L	C	U	0.010	mg/L	C	U	0.010	mg/L	C	U
Benzene	0.010	mg/L	C	U	0.010	mg/L	C	U	0.010	mg/L	C	U
Bromodichloromethane	0.010	mg/L	C	U	0.010	mg/L	C	U	0.010	mg/L	C	U
Bromoform	0.010	mg/L	C	U	0.010	mg/L	C	U	0.010	mg/L	C	U
Bromomethane	0.010	mg/L	C	U	0.010	mg/L	C	U	0.010	mg/L	C	U
Carbon Tetrachloride	0.010	mg/L	C	U	0.010	mg/L	C	U	0.010	mg/L	C	U
Carbon disulfide	0.010	mg/L	C	UJ	0.010	mg/L	C	UJ	0.010	mg/L	C	U
Chlorobenzene	0.010	mg/L	C	U	0.010	mg/L	C	U	0.010	mg/L	C	U
Chloroethane	0.010	mg/L	C	UJ	0.010	mg/L	C	UJ	0.010	mg/L	C	U
Chloroform	0.010	mg/L	C	U	0.010	mg/L	C	U	0.010	mg/L	C	U
Chloromethane	0.010	mg/L	C	UJ	0.010	mg/L	C	UJ	0.010	mg/L	C	U
Dibromochloromethane	0.010	mg/L	C	U	0.010	mg/L	C	U	0.010	mg/L	C	U
Ethylbenzene	0.010	mg/L	C	U	0.010	mg/L	C	U	0.010	mg/L	C	U
Methylene chloride	0.010	mg/L	C	UJ	0.011	mg/L	C	UJ	0.010	mg/L	C	U
Styrene	0.010	mg/L	C	U	0.010	mg/L	C	U	0.010	mg/L	C	UJ
Tetrachloroethene	0.010	mg/L	C	U	0.010	mg/L	C	U	0.010	mg/L	C	U
Toluene	0.010	mg/L	C	U	0.010	mg/L	C	U	0.010	mg/L	C	U
Trichloroethene	0.010	mg/L	C	U	0.010	mg/L	C	U	0.010	mg/L	C	U
Vinyl Acetate	0.010	mg/L	C	U	0.010	mg/L	C	U	0.010	mg/L	C	U
Vinyl chloride	0.010	mg/L	C	U	0.010	mg/L	C	UJ	0.010	mg/L	C	U
Xylenes, Total	0.010	mg/L	C	U	0.010	mg/L	C	U	0.010	mg/L	C	U
cis-1,3-Dichloropropene	0.010	mg/L	C	U	0.010	mg/L	C	U	0.010	mg/L	C	U
trans-1,3-Dichloropropene	0.010	mg/L	C	U	0.010	mg/L	C	U	0.010	mg/L	C	U

TABLE E-14
(Continued)

PHASE II - CHEMICAL PARAMETERS

QC TYPE	TRIP BLANK				TRIP BLANK				TRIP BLANK			
SAMPLE NUMBER	116282				116333				116334			
ASSOCIATED SAMPLES	116283, 116301, 116312, 116308				116331, 116332				116336, 116337, 116338, 116335			
SAMPLING DATE	05/13/93				05/19/93				05/20/93			
CHEMICAL PARAMETERS	RESULTS	UNITS	L	VQ	RESULTS	UNITS	L	VQ	RESULTS	UNITS	L	VQ
Volatile Organics												
1,1,1-Trichloroethane	0.010	mg/L	C	U	0.010	mg/L	C	U	0.010	mg/L	C	U
1,1,2,2-Tetrachloroethane	0.010	mg/L	C	U	0.010	mg/L	C	U	0.010	mg/L	C	U
1,1,2-Trichloroethane	0.010	mg/L	C	U	0.010	mg/L	C	U	0.010	mg/L	C	U
1,1-Dichloroethane	0.010	mg/L	C	U	0.010	mg/L	C	U	0.010	mg/L	C	U
1,1-Dichloroethene	0.010	mg/L	C	U	0.010	mg/L	C	U	0.010	mg/L	C	U
1,2-Dichloroethane	0.010	mg/L	C	U	0.010	mg/L	C	U	0.010	mg/L	C	U
1,2-Dichloroethene	0.010	mg/L	C	U	0.010	mg/L	C	U	0.010	mg/L	C	U
1,2-Dichloropropane	0.010	mg/L	C	U	0.010	mg/L	C	U	0.010	mg/L	C	U
2-Butanone	0.010	mg/L	C	U	0.010	mg/L	C	UJ	0.010	mg/L	C	U
2-Hexanone	0.010	mg/L	C	U	0.010	mg/L	C	UJ	0.010	mg/L	C	UJ
4-Methyl-2-pentanone	0.010	mg/L	C	U	0.010	mg/L	C	UJ	0.010	mg/L	C	UJ
Acetone	0.010	mg/L	C	U	0.010	mg/L	C	U	0.010	mg/L	C	U
Benzene	0.007	mg/L	C	J	0.010	mg/L	C	U	0.010	mg/L	C	U
Bromodichloromethane	0.010	mg/L	C	U	0.010	mg/L	C	U	0.010	mg/L	C	U
Bromoform	0.010	mg/L	C	U	0.010	mg/L	C	U	0.010	mg/L	C	U
Bromomethane	0.010	mg/L	C	U	0.010	mg/L	C	U	0.010	mg/L	C	U
Carbon Tetrachloride	0.010	mg/L	C	U	0.010	mg/L	C	U	0.010	mg/L	C	U
Carbon disulfide	0.010	mg/L	C	U	0.010	mg/L	C	U	0.010	mg/L	C	U
Chlorobenzene	0.010	mg/L	C	U	0.010	mg/L	C	U	0.010	mg/L	C	U
Chloroethane	0.010	mg/L	C	U	0.010	mg/L	C	U	0.010	mg/L	C	U
Chloroform	0.010	mg/L	C	U	0.010	mg/L	C	U	0.010	mg/L	C	U
Chloromethane	0.010	mg/L	C	U	0.010	mg/L	C	U	0.010	mg/L	C	U
Dibromochloromethane	0.010	mg/L	C	U	0.010	mg/L	C	U	0.010	mg/L	C	U
Ethylbenzene	0.010	mg/L	C	U	0.010	mg/L	C	U	0.010	mg/L	C	U
Methylene chloride	0.010	mg/L	C	U	0.010	mg/L	C	UJ	0.010	mg/L	C	UJ
Styrene	0.010	mg/L	C	UJ	0.010	mg/L	C	U	0.010	mg/L	C	U
Tetrachloroethene	0.010	mg/L	C	U	0.010	mg/L	C	U	0.010	mg/L	C	U
Toluene	0.010	mg/L	C	U	0.010	mg/L	C	U	0.010	mg/L	C	U
Trichloroethene	0.010	mg/L	C	U	0.010	mg/L	C	U	0.010	mg/L	C	U
Vinyl Acetate	0.010	mg/L	C	U	0.010	mg/L	C	UJ	0.010	mg/L	C	U
Vinyl chloride	0.010	mg/L	C	U	0.010	mg/L	C	U	0.010	mg/L	C	U
Xylenes, Total	0.010	mg/L	C	U	0.010	mg/L	C	U	0.010	mg/L	C	U
cis-1,3-Dichloropropene	0.010	mg/L	C	U	0.010	mg/L	C	U	0.010	mg/L	C	U
trans-1,3-Dichloropropene	0.010	mg/L	C	U	0.010	mg/L	C	U	0.010	mg/L	C	U

TABLE E-14
(Continued)

PHASE II - CHEMICAL PARAMETERS

QC TYPE	TRIP BLANK				TRIP BLANK				TRIP BLANK			
SAMPLE NUMBER	116339				116391				116435			
ASSOCIATED SAMPLES	116340, 116341				116392				116427			
SAMPLING DATE	05/21/93				06/07/93				05/25/93			
CHEMICAL PARAMETERS	RESULTS	UNITS	L	VQ	RESULTS	UNITS	L	VQ	RESULTS	UNITS	L	VQ
Volatile Organics												
1,1,1-Trichloroethane	0.010	mg/L	C	U	0.010	mg/L	C	U	0.010	mg/L	C	U
1,1,2,2-Tetrachloroethane	0.010	mg/L	C	U	0.010	mg/L	C	U	0.010	mg/L	C	U
1,1,2-Trichloroethane	0.010	mg/L	C	U	0.010	mg/L	C	U	0.010	mg/L	C	U
1,1-Dichloroethane	0.010	mg/L	C	U	0.010	mg/L	C	U	0.010	mg/L	C	U
1,1-Dichloroethene	0.010	mg/L	C	U	0.010	mg/L	C	U	0.010	mg/L	C	U
1,2-Dichloroethane	0.010	mg/L	C	U	0.010	mg/L	C	U	0.010	mg/L	C	U
1,2-Dichloroethene	0.010	mg/L	C	U	0.010	mg/L	C	U	0.010	mg/L	C	U
1,2-Dichloropropane	0.010	mg/L	C	U	0.010	mg/L	C	U	0.010	mg/L	C	U
2-Butanone	0.010	mg/L	C	U	0.010	mg/L	C	U	0.010	mg/L	C	U
2-Hexanone	0.010	mg/L	C	UJ	0.010	mg/L	C	U	0.010	mg/L	C	U
4-Methyl-2-pentanone	0.010	mg/L	C	UJ	0.010	mg/L	C	U	0.010	mg/L	C	U
Acetone	0.010	mg/L	C	U	0.010	mg/L	C	U	0.010	mg/L	C	UJ
Benzene	0.010	mg/L	C	U	0.010	mg/L	C	U	0.010	mg/L	C	U
Bromodichloromethane	0.010	mg/L	C	U	0.010	mg/L	C	U	0.010	mg/L	C	U
Bromoform	0.010	mg/L	C	U	0.010	mg/L	C	UJ	0.010	mg/L	C	U
Bromomethane	0.010	mg/L	C	U	0.010	mg/L	C	U	0.010	mg/L	C	U
Carbon Tetrachloride	0.010	mg/L	C	U	0.010	mg/L	C	U	0.010	mg/L	C	U
Carbon disulfide	0.010	mg/L	C	U	0.010	mg/L	C	U	0.010	mg/L	C	U
Chlorobenzene	0.010	mg/L	C	U	0.010	mg/L	C	U	0.010	mg/L	C	U
Chloroethane	0.010	mg/L	C	U	0.010	mg/L	C	U	0.010	mg/L	C	UJ
Chloroform	0.010	mg/L	C	U	0.010	mg/L	C	U	0.010	mg/L	C	U
Chloromethane	0.010	mg/L	C	U	0.010	mg/L	C	U	0.010	mg/L	C	U
Dibromochloromethane	0.010	mg/L	C	U	0.010	mg/L	C	U	0.010	mg/L	C	U
Ethylbenzene	0.010	mg/L	C	U	0.010	mg/L	C	U	0.010	mg/L	C	U
Methylene chloride	0.010	mg/L	C	UJ	0.010	mg/L	C	U	0.010	mg/L	C	UJ
Styrene	0.010	mg/L	C	U	0.010	mg/L	C	U	0.010	mg/L	C	U
Tetrachloroethene	0.010	mg/L	C	U	0.010	mg/L	C	U	0.010	mg/L	C	UJ
Toluene	0.010	mg/L	C	U	0.010	mg/L	C	U	0.010	mg/L	C	U
Trichloroethene	0.010	mg/L	C	U	0.010	mg/L	C	U	0.010	mg/L	C	U
Vinyl Acetate	0.010	mg/L	C	U	0.010	mg/L	C	U	0.010	mg/L	C	U
Vinyl chloride	0.010	mg/L	C	U	0.010	mg/L	C	U	0.010	mg/L	C	U
Xylenes, Total	0.010	mg/L	C	U	0.010	mg/L	C	U	0.010	mg/L	C	U
cis-1,3-Dichloropropene	0.010	mg/L	C	U	0.010	mg/L	C	U	0.010	mg/L	C	U
trans-1,3-Dichloropropene	0.010	mg/L	C	U	0.010	mg/L	C	U	0.010	mg/L	C	U

TABLE E-14
(Continued)

PHASE II - CHEMICAL PARAMETERS

QC TYPE	TRIP BLANK
SAMPLE NUMBER	116449
ASSOCIATED SAMPLES	116438, 116441
SAMPLING DATE	05/27/93

CHEMICAL PARAMETERS	RESULTS	UNITS	L	VQ
Volatile Organics				
1,1,1-Trichloroethane	0.010	mg/L	C	UJ
1,1,2,2-Tetrachloroethane	0.010	mg/L	C	UJ
1,1,2-Trichloroethane	0.010	mg/L	C	UJ
1,1-Dichloroethane	0.010	mg/L	C	UJ
1,1-Dichloroethene	0.010	mg/L	C	UJ
1,2-Dichloroethane	0.010	mg/L	C	UJ
1,2-Dichloroethene	0.010	mg/L	C	UJ
1,2-Dichloropropane	0.010	mg/L	C	UJ
2-Butanone	0.010	mg/L	C	UJ
2-Hexanone	0.010	mg/L	C	UJ
4-Methyl-2-pentanone	0.010	mg/L	C	UJ
Acetone	0.002	mg/L	C	J
Benzene	0.010	mg/L	C	UJ
Bromodichloromethane	0.010	mg/L	C	UJ
Bromoform	0.010	mg/L	C	UJ
Bromomethane	0.010	mg/L	C	UJ
Carbon Tetrachloride	0.010	mg/L	C	UJ
Carbon disulfide	0.010	mg/L	C	UJ
Chlorobenzene	0.010	mg/L	C	UJ
Chloroethane	0.010	mg/L	C	UJ
Chloroform	0.010	mg/L	C	UJ
Chloromethane	0.010	mg/L	C	R
Dibromochloromethane	0.010	mg/L	C	UJ
Ethylbenzene	0.010	mg/L	C	UJ
Methylene chloride	0.010	mg/L	C	UJ
Styrene	0.010	mg/L	C	UJ
Toluene	0.010	mg/L	C	UJ
Trichloroethene	0.010	mg/L	C	UJ
Vinyl Acetate	0.010	mg/L	C	UJ
Vinyl chloride	0.010	mg/L	C	UJ
Xylenes, Total	0.010	mg/L	C	UJ
cis-1,3-Dichloropropene	0.010	mg/L	C	UJ
trans-1,3-Dichloropropene	0.010	mg/L	C	UJ

0295

5174

TABLE E-15

INACTIVE FLYASH PILE
ON-SITE LABORATORY SCREENING RESULTS
PHASE II FIELD INVESTIGATION
OPERABLE UNIT 2 REMEDIAL INVESTIGATION
FERNALD ENVIRONMENTAL MANAGEMENT PROJECT

SURFACE WATER SCREENING SAMPLES

Location	Sample No.	Description	Date Collected	Total Uranium (μg/L)
IFP-SW-02	111829	Drainage West of IFP	4/26/93	160
IFP-SW-02	112024	Surface Water (Dup of 111829)	4/30/93	830
IFP-SW-03	111824	Paddys Run Upstream of IFP	4/21/93	6.0
IFP-SW-03	112026	Surface Water (Dup of 111824)	5/1/93	5.5
IFP-SW-04	111822	Surface Water East of IFP	4/21/93	6.0
IFP-SW-04	112019	Surface Water East of IFP	4/29/93	5.0
IFP-SW-05	112029	Drainage West of IFP	5/2/93	910
IFP-SW-06	112030	Drainage West of IFP	5/2/93	23
IFP-SW-06a	112031	Drainage West of IFP	5/2/93	23
IFP-SW-07	112032	Drainage West of IFP	5/2/93	20
IFP-SW-08	112033	Drainage West of IFP	5/2/93	11
IFP-SW-09	112034	Drainage West of IFP	5/2/93	81
IFP-SW-10	113491	Drainage West of IFP	5/7/93	280
IFP-SW-11	116459	Surface Water	5/18/93	820
IFP-SW-12	116460	Surface Water	5/18/93	370

GROUNDWATER SCREENING SAMPLES

Location	Sample No.	Description	Sample Interval[a] (ft.)	Date Collected	Total Uranium (μg/L)
1047	110893	Existing Monitoring Well	NA[b]	4/27/93	6.1
1999	111922	Hydropunch	8.0-12.0	4/19/93	460
2016	112007	Existing Monitoring Well	NA	4/30/93	19
2047	110895	Existing Monitoring Well	NA	4/27/93	11
2402	116227	Existing Monitoring Well	NA	5/5/93	15
2402	116228	Existing Monitoring Well	NA	5/5/93	14
2955	113803	New Monitoring Well	NA	6/22/93	8.3
11000	111759	Hydropunch	13.0-17.0	4/13/93	410
11001	111690	Hydropunch	17.0-21.0	4/13/93	280
11002	116461	Hydropunch	13.0	5/5/93	6700
11003	111840	Hydropunch	22.0-26.0	4/19/93	720
11004	111855	Hydropunch	20.0-24.0	4/18/93	29

See footnotes at end of table

0296

TABLE E-15
(Continued)

GROUNDWATER SCREENING SAMPLES (Continued)

Location	Sample No.	Description	Sample Interval[a] (ft.)	Date Collected	Total Uranium (μg/L)
11007	110679	Hydropunch	20.0-24.0	4/21/93	9.5
11047	116318	Hydropunch	8.0-12.0	5/16/93	19
11048	116351	Boring/Hydropunch	22.0-24.0	5/26/93	430
11049	116356	Hydropunch	7.5-11.5	5/28/93	77
11050	116454	Hydropunch	10.5-14.5	6/4/93	370
11051	116437	Hydropunch	17-21	5/27/93	74

SUBSURFACE SCREENING SAMPLES

Location	Sample No.	Sample Interval (ft.)	Date Collected	Total Uranium (μg/g)	Total Thorium (μg/g)
1994	116265	3.5-4.0	5/12/93	5	-[c]
1994	116277	11.5-12.0	5/12/93	6	-
1994	116284	15.5-16.0	5/13/93	6	-
1994	116293	21.5-22.0	5/13/93	3	-
1994	116302	27.5-28.0	5/13/93	<11	-
1994	116313	37.5-38.0	5/13/93	<11	-
1994	116314	37.5-38.0	5/13/93	<11	-
1995	116081	3.0-4.0	5/1/93	16	-
1995	116091	9.0-9.5	5/1/93	3	-
1995	116094	11.0-11.5	5/1/93	5	-
1995	116103	17.0-17.5	5/1/93	10	-
1995	116115	25.5-26.0	5/1/93	5	-
1995	116118	27.5-28.0	5/1/93	2	-
1995	116173	31.5-32.0	5/2/93	5	-
1996	112079	9.5-10.0	4/29/93	23	-
1996	112086	15.0-15.5	4/29/93	6	-
1996	116072	21.5-22.0	4/29/93	<11	-
1997	116178	1.5-2.0	5/5/93	<11	-
1997	116184	5.5-6.0	5/5/93	40	-
1997	116193	11.5-12.0	5/5/93	6	-
1997	116199	15.5-16.0	5/5/93	12	-
1997	116241	28.0-28.5	5/6/93	8	-
1997	116244	30.0-30.5	5/6/93	<11	-
1997	116253	35.5-36.0	5/7/93	22	-
1997	116258	39.0-39.5	5/7/93	<11	-

See footnotes at end of table

0297

TABLE E-15
(Continued)

SUBSURFACE SCREENING SAMPLES (Continued)

Location	Sample No.	Sample Interval (ft.)	Date Collected	Total Uranium (μg/g)	Total Thorium (μg/g)
1998	112044	1.5-2.0	4/28/93	120	-
1998	112053	7.5-8.0	4/28/93	<11	-
1998	112059	11.5-12.0	4/28/93	<11	-
1998	112066	18.5-19.0	4/28/93	<11	-
1999	111920	12.0-12.5	4/19/93	<11	-
1999	111921	12.5-13.0	4/19/93	<11	-
2955	112955	50.0-65.0	4/30/93	<11	-
11000	111762	16.5-17.0	4/15/93	<11	-
11000	111763	17.0-17.5	4/15/93	<11	-
11000	111764	17.5-18.0	4/15/93	<11	-
11001	111731	21.5-22.0	4/13/93	<11	-
11002	116462	16.5	5/5/93	<11	-
11003	111854	25.5-26.0	4/17/93	378	-
11004	111895	24.0-24.5	4/18/93	<11	-
11004	111896	24.5-25.0	4/18/93	<11	-
11005	111984	10.5-11.0	4/29/93	165	-
11005	116121	18.0-18.5	4/29/93	12	-
11006	111966	22.5-24.0	4/26/93	3300	-
11006	111969	28.0-28.5	4/26/93	26	-
11007	110678	22.5-23.0	4/21/93	<11	-
11008	116154	21.0-21.5	5/2/93	<11	-
11048	116344	21.0-22.0	5/25/93	<11	-
11048	116348	26.0-27.5	5/26/93	<11	-
11049	116353	6.5-8.0	5/27/93	<11	-
11049	116355	6.5-8.0	5/27/93	<11	<18
11049	116358	11.5-12.5	5/28/93	<11	-
11049	116360	11.5-12.5	5/28/93	<11	<18
11050	116453	10.0-12.0	6/3/93	<11	<18
11050	116456	16.0-18.0	6/7/93	<11	<18
11051	116439	21.0-22.0	5/27/93	1010	-
11051	116442	22.0-24.0	5/27/93	1470	-
11051	116445	28.0-30.0	5/27/93	<11	-
11052	116428	19.0-21.0	5/25/93	1000	-
11052	116431	25.0-27.0	5/25/93	<11	-

See footnotes at end of table

TABLE E-15
(Continued)

SUBSURFACE SCREENING SAMPLES (Continued)

Location	Sample No.	Sample Interval (ft.)	Date Collected	Total Uranium (μg/g)	Total Thorium (μg/g)
11053	116420	18.0-20.0	5/20/93	<11	-
11053	116422	24.0-26.0	5/21/93	<11	-

GAMMA SCREENING SAMPLES

Location	Sample No.	Sample Interval (ft.)	Date Collected	Gamma Activity (pCi/g)
1995	116082	3.5-4.0	5/1/93	<28
1995	116092	9.0-9.5	5/1/93	<57
1995	116095	11.0-11.5	5/1/93	<58
1995	116104	17.0-17.5	5/1/93	<58
1995	116116	25.5-26.0	5/1/93	<57
1995	116169	27.5-28.0	5/1/93	<29
1995	116174	31.5-32.0	5/2/93	<29
1996	112085	15-15.5	4/29/93	<41
1996	116071	21.5-22.0	4/29/93	<29
1997	116179	1.5-2.0	5/5/93	<58
1997	116185	5.5-6.0	5/5/93	<40
1997	116194	11.5-12.0	5/5/93	<40
1997	116200	15.5-16.0	5/5/93	<40
1997	116242	28.0-28.5	5/6/93	<40
1997	116245	30.0-30.5	5/6/93	<58
1997	116254	35.5-36.0	5/7/93	<29
1997	116259	39.0-39.5	5/7/93	<28
1998	112043	1.5-2.0	4/28/93	<40
1998	112052	7.5-8.0	4/28/93	<57
1998	112058	11.5-12.0	4/28/93	<57
1998	112067	18.5-19.0	4/28/93	<57
11048	116343	21.0-22.0	5/25/93	<29
11048	116347	26.0-27.5	5/26/93	<28
11049	116352	6.5-8.0	5/27/93	<28
11049	116354	6.5-8.0	5/27/93	<20
11049	116357	6.5-8.0	5/28/93	<28
11049	116359	11.5-12.5	5/28/93	<20
11050	116450	10.0-12.0	6/3/93	<28
11050	116455	16.0-18.0	6/7/93	<27
11051	116440	21.0-22.0	5/27/93	36

0299

See footnotes at end of table

TABLE E-15
(Continued)

GAMMA SCREENING SAMPLES
(continued)

Location	Sample No.	Sample Interval (ft.)	Date Collected	Gamma Activity (pCi/g)
11051	116443	22.0-24.0	5/27/93	76
11051	116446	28.0-30.0	5/27/93	<27
11052	116429	19.0-21.0	5/25/93	30
11052	116432	25.0-27.0	5/25/93	<28
11053	116424	18.0-20.0	5/20/93	<28
11053	116426	24.0-26.0	5/21/93	<27

ALPHA/BETA SCREENING SAMPLES

Location	Sample No.	Sample Interval (ft.)	Date Collected	Alpha Activity (pCi/g)	Beta Activity (pCi/g)
11006	111962	22.5-24.0	4/26/93	710	780

[a]The sample interval is depth, in feet, below the ground surface.

[b]NA = Not applicable.

[c]The sample was not analyzed for total thorium.

0300

TABLE E-16A

INACTIVE FLYASH PILE
ON-SITE LABORATORY SCREENING RESULTS
ACTIVITY CONCENTRATION OF CIS PROFILE SAMPLES
OPERABLE UNIT 2 REMEDIAL INVESTIGATION
FERNALD ENVIRONMENTAL MANAGEMENT PROJECT

Begin - End Depth (feet)	Radionuclide	Qualifier[a]	Activity Concentration (pCi/g)	Uncertainty (pCi/g)
		BOREHOLE 24-10		
0 - 1	Radium-226	<	1.80	NA[b]
0 - 1	Thorium-232		1.80	0.90
0 - 1	Uranium-238		19.80	5.40
1 - 2	Radium-226		1.20	0.40
1 - 2	Thorium-232	<	0.40	NA
1 - 2	Uranium-238		11.80	4.20
2 - 3	Radium-226		2.50	0.70
2 - 3	Thorium-232		1.60	1.00
2 - 3	Uranium-238		20.20	5.00
3 - 4	Radium-226		2.70	1.00
3 - 4	Thorium-232		2.90	1.30
3 - 4	Uranium-238		23.50	7.60
4 - 5	Radium-226		3.70	0.60
4 - 5	Thorium-232		2.70	1.00
4 - 5	Uranium-238	<	7.70	NA
5 - 6	Radium-226		2.40	0.80
5 - 6	Thorium-232		3.50	0.80
5 - 6	Uranium-238	<	16.50	NA
6 - 7	Radium-226		2.00	0.70
6 - 7	Thorium-232		2.50	0.80
6 - 7	Uranium-238		18.00	4.30
7 - 8	Radium-226		3.00	0.80
7 - 8	Thorium-232	<	4.30	NA
7 - 8	Uranium-238	<	14.70	NA
8 - 9	Radium-226		2.80	0.80
8 - 9	Thorium-232		2.40	0.80
8 - 9	Uranium-238	<	8.30	NA
9 - 10	Radium-226		3.00	0.80
9 - 10	Thorium-232		1.50	0.80
9 - 10	Uranium-238	<	11.00	NA
10 - 11	Radium-226		2.90	0.60
10 - 11	Thorium-232		2.60	0.80
10 - 11	Uranium-238	<	7.70	NA

See footnotes at end of table

TABLE E-16A
(Continued)

Begin - End Depth (feet)	Radionuclide	Qualifier[a]	Activity Concentration (pCi/g)	Uncertainty (pCi/g)
		BOREHOLE 24-10 (Continued)		
11 - 12	Radium-226		2.10	0.60
11 - 12	Thorium-232		1.60	0.50
11 - 12	Uranium-238	<	6.90	NA
12 - 13	Radium-226		2.10	0.60
12 - 13	Thorium-232		3.00	0.90
12 - 13	Uranium-238	<	15.60	NA
13 - 14	Radium-226		1.50	0.50
13 - 14	Thorium-232		1.00	0.60
13 - 14	Uranium-238	<	11.50	NA
14 - 15	Radium-226	<	0.70	NA
14 - 15	Thorium-232		0.80	0.60
14 - 15	Uranium-238	<	5.20	NA
15 - 16	Radium-226		2.50	0.80
15 - 16	Thorium-232		1.50	0.60
15 - 16	Uranium-238		135.00	8.00
16 - 17	Radium-226		2.90	0.90
16 - 17	Thorium-232		1.50	0.90
16 - 17	Uranium-238		40.50	6.50
17 - 18	Radium-226		4.00	0.80
17 - 18	Thorium-232	<	2.10	NA
17 - 18	Uranium-238		81.60	7.50
18 - 19	Radium-226		2.60	0.60
18 - 19	Thorium-232	<	1.40	NA
18 - 19	Uranium-238		74.40	6.30
19 - 20	Radium-226		1.20	0.40
19 - 20	Thorium-232	<	0.80	NA
19 - 20	Uranium-238		8.90	4.00
20 - 21	Radium-226		7.00	0.90
20 - 21	Thorium-232	<	3.00	NA
20 - 21	Uranium-238		139.00	9.00
21 - 22	Radium-226		7.90	1.10
21 - 22	Thorium-232	<	3.70	NA
21 - 22	Uranium-238		160.00	11.00
22 - 24	Radium-226		5.10	1.10
22 - 24	Thorium-232		2.20	1.00
22 - 24	Uranium-238		104.00	11.00

See footnotes at end of table

TABLE E-16A
(Continued)

Begin - End Depth (feet)	Radionuclide	Qualifier[a]	Activity Concentration (pCi/g)	Uncertainty (pCi/g)
		BOREHOLE 24-10 (Continued)		
24 - 26	Radium-226		1.40	0.70
24 - 26	Thorium-232	<	0.40	NA
24 - 26	Uranium-238		10.00	3.50
		BOREHOLE 24-11		
0 - 1	Radium-226		1.70	0.80
0 - 1	Thorium-232		2.20	1.00
0 - 1	Uranium-238	<	15.10	NA
1 - 2	Radium-226		1.10	0.50
1 - 2	Thorium-232		1.30	0.60
1 - 2	Uranium-238		17.00	3.50
2 - 3	Radium-226		1.00	0.70
2 - 3	Thorium-232		1.50	0.80
2 - 3	Uranium-238		13.70	4.00
3 - 4	Radium-226	<	0.80	NA
3 - 4	Thorium-232		1.50	0.80
3 - 4	Uranium-238		9.10	3.50
4 - 5	Radium-226	<	0.90	NA
4 - 5	Thorium-232		1.30	0.80
4 - 5	Uranium-238	<	10.90	NA
5 - 6	Radium-226		1.70	0.90
5 - 6	Thorium-232		1.00	0.60
5 - 6	Uranium-238		7.60	4.20
6 - 7	Radium-226		1.70	0.60
6 - 7	Thorium-232		2.20	0.70
6 - 7	Uranium-238		11.90	5.00
7 - 8	Radium-226		2.90	0.60
7 - 8	Thorium-232		3.10	0.60
7 - 8	Uranium-238	<	10.30	NA
8 - 9	Radium-226		1.80	1.00
8 - 9	Thorium-232		2.60	0.90
8 - 9	Uranium-238	<	10.70	NA
9 - 10	Radium-226		2.60	0.90
9 - 10	Thorium-232		2.00	1.20
9 - 10	Uranium-238	<	10.20	NA
10 - 11	Radium-226		2.10	0.70
10 - 11	Thorium-232		2.90	0.60

See footnotes at end of table

0303

TABLE E-16A
(Continued)

Begin - End Depth (feet)	Radionuclide	Qualifier[a]	Activity Concentration (pCi/g)	Uncertainty (pCi/g)
		BOREHOLE 24-11 (Continued)		
10 - 11	Uranium-238	<	9.30	NA
11 - 12	Radium-226		2.00	0.60
11 - 12	Thorium-232		2.20	1.50
11 - 12	Uranium-238	<	9.20	NA
12 - 13	Radium-226		1.90	0.60
12 - 13	Thorium-232		1.80	0.70
12 - 13	Uranium-238	<	16.40	NA
13 - 14	Radium-226		2.10	0.90
13 - 14	Thorium-232		1.90	1.00
13 - 14	Uranium-238	<	9.60	NA
14 - 15	Radium-226		2.00	1.40
14 - 15	Thorium-232		2.20	0.80
14 - 15	Uranium-238	<	15.00	NA
15 - 16	Radium-226		2.60	0.80
15 - 16	Thorium-232		2.20	1.40
15 - 16	Uranium-238	<	6.20	NA
16 - 17	Radium-226		1.80	0.60
16 - 17	Thorium-232		2.90	0.90
16 - 17	Uranium-238	<	9.80	NA
17 - 18	Radium-226		1.50	0.80
17 - 18	Thorium-232		3.30	0.90
17 - 18	Uranium-238	<	10.10	NA
18 - 19	Radium-226	<	2.50	NA
18 - 19	Thorium-232		3.60	0.80
18 - 19	Uranium-238	<	9.50	NA
19 - 20	Radium-226		2.00	0.80
19 - 20	Thorium-232		2.20	0.80
19 - 20	Uranium-238	<	8.50	NA
20 - 21	Radium-226	<	2.30	NA
20 - 21	Thorium-232		3.50	0.90
20 - 21	Uranium-238	<	10.80	NA
21 - 22	Radium-226		2.30	1.20
21 - 22	Thorium-232		2.90	0.80
21 - 22	Uranium-238	<	17.60	NA
22 - 23	Radium-226		2.10	0.90
22 - 23	Thorium-232	<	4.70	NA

See footnotes at end of table

TABLE E-16A
(Continued)

Begin - End Depth (feet)	Radionuclide	Qualifier[a]	Activity Concentration (pCi/g)	Uncertainty (pCi/g)
		BOREHOLE 24-11 (Continued)		
22 - 23	Uranium-238	<	11.30	NA
23 - 24	Radium-226		1.80	0.70
23 - 24	Thorium-232		2.60	0.70
23 - 24	Uranium-238	<	13.00	NA
24 - 25	Radium-226		1.90	0.90
24 - 25	Thorium-232		1.10	0.60
24 - 25	Uranium-238		14.10	6.90
25 - 26	Radium-226		1.90	0.80
25 - 26	Thorium-232		2.40	1.00
25 - 26	Uranium-238	<	18.70	NA
26 - 27	Radium-226		1.30	0.60
26 - 27	Thorium-232		1.70	1.10
26 - 27	Uranium-238		6.30	4.40
27 - 28	Radium-226		1.60	0.60
27 - 28	Thorium-232		2.40	0.80
27 - 28	Uranium-238		5.30	2.40
28 - 29	Radium-226		1.20	0.90
28 - 29	Thorium-232	<	3.70	NA
28 - 29	Uranium-238	<	12.00	NA
29 - 30	Radium-226		1.80	0.80
29 - 30	Thorium-232		1.60	1.00
29 - 30	Uranium-238		15.90	3.80
30 - 31	Radium-226		1.40	0.80
30 - 31	Thorium-232		1.90	0.60
30 - 31	Uranium-238		2.60	2.00
31 - 32	Radium-226		1.00	0.30
31 - 32	Thorium-232		1.00	0.30
31 - 32	Uranium-238	<	3.50	NA
32 - 33	Radium-226		0.80	0.50
32 - 33	Thorium-232		0.80	0.30
32 - 33	Uranium-238	<	4.40	NA
33 - 34	Radium-226		1.00	0.40
33 - 34	Thorium-232		0.60	0.40
33 - 34	Uranium-238	<	4.30	NA

[a]Qualifiers are from the laboratory. No data validation was performed on screening data. < = less than.
[b]NA = Not applicable

5174

TABLE E-16B

INACTIVE FLYASH PILE
CIS SURFACE SOIL ON-SITE ANALYTICAL DATA
OPERABLE UNIT 2 REMEDIAL INVESTIGATION
FERNALD ENVIRONMENTAL MANAGEMENT PROJECT

FEMP ID#	Isotope	Activity (pCi/g)	Uncertainty	Lab. Qual.
FMP-SL-24-023	Cesium-137	0.5	0.3	
	Potassium-40	8.1	3	
	Radium-226	2.2	0.5	
	Ruthenium-106	3.2		<
	Thorium-232	1.3		<
	Uranium-238	6.3		<
FMP-SL-24-024	Cesium-137	0.8		<
	Potassium-40	6.1	2.9	
	Radium-226	3	0.5	
	Ruthenium-106	5.6		<
	Thorium-232	0.9	0.5	
	Uranium-238	7.9	2.8	
FMP-SL-24-025	Cesium-137	0.4		<
	Potassium-40	4.1		<
	Radium-226	2.8	0.5	
	Ruthenium-106	5.6		<
	Thorium-232	1.3	0.5	
	Uranium-238	13		<
FMP-SL-24-138	Cesium-137	0.9		<
	Potassium-40	20.1		<
	Radium-226	2.2		<
	Ruthenium-106	5.7		<
	Thorium-232	4.3	0.8	
	Uranium-238	37.1	5.7	

0308

TABLE E-16B
(Continued)

FEMP ID#	Isotope	Activity (pCi/g)	Uncertainty	Lab. Qual.
FMP-SL-24-139	Cesium-137	0.5		<
	Potassium-40	17.9		<
	Radium-226	1.2		<
	Ruthenium-106	4.1		<
	Thorium-232	3	0.6	
	Uranium-238	25.7	6.4	
FMP-SL-24-145	Cesium-137	0.9		<
	Potassium-40	5.3	2.6	
	Radium-226	7.4	0.8	
	Ruthenium-106	6.8		<
	Thorium-232	3.3	1	
	Uranium-238	11.7	6.4	
FMP-SL-24-184	Cesium-137	1.80		<
	Radium-226	3.50		<
	Ruthenium-106	11.10		<
	Thorium-232	19.80	±1.10	NA
	Uranium-238	36.70		<
FMP-SL-24-186	Cesium-137	0.1		<
	Potassium-40	7.3		<
	Radium-226	1		<
	Ruthenium-106	6.5		<
	Thorium-232	0.9	0.4	
	Uranium-238	2.5	2.2	
FMP-SL-24-186D	Cesium-137	0.5		<
	Potassium-40	8.7		<
	Radium-226	0.7		<
	Ruthenium-106	7.9		<

0307

TABLE E-16B
(Continued)

FEMP ID#	Isotope	Activity (pCi/g)	Uncertainty	Lab. Qual.
FMP-SL-24-186D (Continued)	Thorium-232	0.3		<
	Uranium-238	6.5		<
FMP-SL-24-187	Cesium-137	0.6		<
	Potassium-40	6.9	2.8	
	Radium-226	0.8	0.4	
	Ruthenium-106	3.7		<
	Thorium-232	3.8	0.8	
	Uranium-238	16.3	4.3	
FMP-SL-24-188	Cesium-137	1.1		<
	Potassium-40	7.7	3	
	Radium-226	2		<
	Ruthenium-106	7.1		<
	Thorium-232	5.5	0.7	
	Uranium-238	33.8	6.4	
FMP-SL-24-214	Cesium-137	0.7		<
	Potassium-40	0.9		<
	Radium-226	2.3		<
	Ruthenium-106	2.8		<
	Uranium-238	19.8	5.7	
FMP-SL-24-215QC	Cesium-137	0.6		<
	Potassium-40	8.6		<
	Radium-226	2.3		<
	Ruthenium-106	10.5		<
	Thorium-232	5.4	0.7	
	Uranium-238	17.6	5.4	

TABLE E-16B
(Continued)

FEMP ID#	Isotope	Activity (pCi/g)	Uncertainty	Lab. Qual.
FMP-SL-24-216	Cesium-137	0.6		<
	Potassium-40	12.3	6.1	
	Radium-226	1	0.4	
	Ruthenium-106	5		<
	Thorium-232	2.8	0.6	
	Uranium-238	17.3	3.8	
FMP-SL-24-216D	Cesium-137	0.8		<
	Potassium-40	9.6	3.5	
	Radium-226	0.7	0.5	
	Ruthenium-106	4.5		<
	Thorium-232	2.5	0.5	
	Uranium-238	16.6	6.2	
FMP-SL-24-217QC	Cesium-137	0.6		<
	Potassium-40	7.5	3.4	
	Radium-226	1.7	0.5	
	Ruthenium-106	8.7		<
	Thorium-232	3.3	0.6	
	Uranium-238	17.5	4.3	
FMP-SL-24-218	Cesium-137	1.3		<
	Potassium-40	9.9		<
	Radium-226	2.3	0.7	
	Ruthenium-106	11.3		<
	Thorium-232	2.2	0.8	
	Uranium-238	27.8	6.3	
FMP-SL-24-219	Cesium-137	0.4		<
	Potassium-40	8.5		<
	Radium-226	2	0.5	

TABLE E-16B
(Continued)

FEMP ID#	Isotope	Activity (pCi/g)	Uncertainty	Lab. Qual.
FMP-SL-24-219 (Continued)	Ruthenium-106	8.3		<
	Thorium-232	0.5		<
	Uranium-238	37.9	6.6	
FMP-SL-24-225	Cesium-137	1.7		<
	Potassium-40	18.1	4.9	
	Radium-226	41.3	1.9	
	Ruthenium-106	21		<
	Thorium-232	2.5		<
	Uranium-238	32.8		<
FMP-SL-24-226	Cesium-137	1.7		<
	Potassium-40	13		<
	Radium-226	23.2	1.5	
	Ruthenium-106	6		<
	Thorium-232	2.3	1.6	
	Uranium-238	5.2	3.2	
FMP-SL-24-226D	Cesium-137	1.4		<
	Potassium-40	17		<
	Radium-226	25.6	1.5	
	Ruthenium-106	6.3		<
	Thorium-232	8.6		<
	Uranium-238	32.7		<
FMP-SL-24-227	Cesium-137	0.10		<
	Radium-226	6.00	±0.80	NA
	Ruthenium-106	0.70		<
	Thorium-232	5.70		<
	Uranium-238	23.50		<

TABLE E-16B
(Continued)

FEMP ID#	Isotope	Activity (pCi/g)	Uncertainty	Lab. Qual.
FMP-SS-24-003	Cesium-137	0.5	0.4	
	Potassium-40	13.1		<
	Radium-226	1.9	0.6	
	Ruthenium-106	1		<
	Thorium-232	2.1	0.6	
	Uranium-238	7.7	3.4	
FMP-SS-24-005	Cesium-137	0.7	0.3	
	Potassium-40	10.3	4.3	
	Radium-226	2	0.6	
	Ruthenium-106	0.7		<
	Thorium-232	1.2	0.5	
	Uranium-238	5.5	2.4	
FMP-SS-24-137	Cesium-137	2.3		<
	Potassium-40	11.2	5	
	Radium-226	5.9		<
	Ruthenium-106	23.7		<
	Thorium-232	5.3	2.2	
	Uranium-238	204	24	
FMP-SS-24-144	Cesium-137	0.5		<
	Potassium-40	7.4	3.4	
	Radium-226	4.9	0.6	
	Ruthenium-106	3.4		<
	Thorium-232	3.4	0.7	
	Uranium-238	11.6		<
FMP-SS-24-213	Cesium-137	1.4		<
	Potassium-40	9.2	3.6	
	Radium-226	0.6	0.5	

TABLE E-16B
(Continued)

FEMP ID#	Isotope	Activity (pCi/g)	Uncertainty	Lab. Qual.
FMP-SS-24-213 (Continued)	Ruthenium-106	0.7		<
	Thorium-232	0.5	0.4	
	Uranium-238	20.6	6.2	
FMP-SS-24-224	Cesium-137	0.3		<
	Ruthenium-106	12.3		<
	Thorium-232	1.2		<
	Uranium-238	17.9		<
	Radium-226	33.5	2.1	
	Potassium-40	29.6		<
FMP-SS-24-241	Cesium-137	8.9		<
	Potassium-40	3.6		<
	Radium-226	20		<
	Ruthenium-106	94.2		<
	Thorium-232	28.2		<
	Uranium-238	3540	112	
FMP-SS-24-242	Cesium-137	1.6		<
	Potassium-40	10.6	3.2	
	Radium-226	1.4	0.9	
	Ruthenium-106	1.4		<
	Thorium-232	1.1		<
	Uranium-238	11.1	4.4	

TABLE E-16C

INACTIVE FLYASH PILE
CIS FIDLER SURFACE READINGS
OPERABLE UNIT 2 REMEDIAL INVESTIGATION
FERNALD ENVIRONMENTAL MANAGEMENT PROJECT

Coordinates		
North	East	Reading (CPM)
478019.41	1378899.00	7113.00
478069.38	1378900.38	3852.00
477718.16	1378940.88	4472.00
477768.13	1378942.25	4429.00
477818.13	1378943.63	3798.00
477868.09	1378944.88	4077.00
477918.06	1378946.25	4288.00
477968.06	1378947.63	10753.00
477968.06	1378947.63	4919.00
477974.31	1378947.88	10381.00
477980.56	1378948.00	10990.00
477986.81	1378948.13	12876.00
477993.06	1378948.38	11030.00
477999.28	1378948.50	10034.00
478005.53	1378948.75	10792.00
478011.78	1378948.88	9317.00
478018.03	1378949.00	5469.00
478018.03	1378949.00	11584.00
478068.03	1378950.38	4752.00
478118.00	1378951.75	13762.00
478118.00	1378951.75	4643.00
478124.25	1378952.00	10564.00
478130.50	1378952.13	10472.00
478136.73	1378952.25	10734.00
478143.00	1378952.50	10170.00
478167.97	1378953.13	2811.00
477967.88	1378953.88	11638.00
477974.13	1378954.13	10753.00
477980.38	1378954.25	10486.00
477986.63	1378954.38	13637.00
477992.88	1378954.63	20271.00
477999.13	1378954.75	10959.00
478005.38	1378955.00	10527.00
478011.63	1378955.13	10601.00
478017.88	1378955.25	10527.00
478117.84	1378958.00	12270.00
478124.09	1378958.25	12321.00
478130.31	1378958.38	8671.00
478136.56	1378958.50	8619.00

TABLE E-16C
(Continued)

Coordinates		
North	East	Reading (CPM)
478142.81	1378958.75	7473.00
477967.72	1378960.13	9129.00
477973.97	1378960.38	10381.00
477980.22	1378960.50	9444.00
477986.47	1378960.63	13216.00
477992.72	1378960.88	13101.00
477998.97	1378961.00	16950.00
478005.19	1378961.25	11953.00
478011.44	1378961.38	10001.00
478017.69	1378961.50	9804.00
478117.66	1378964.25	12527.00
478123.91	1378964.50	26201.00
478130.16	1378964.63	9951.00
478136.41	1378964.75	8760.00
478142.66	1378965.00	8409.00
477967.53	1378966.38	10453.00
477973.78	1378966.63	9804.00
477980.03	1378966.75	10618.00
477986.28	1378966.88	15874.00
477992.53	1378967.13	11584.00
477998.78	1378967.25	10249.00
478005.03	1378967.50	10345.00
478011.28	1378967.63	11321.00
478017.53	1378967.75	10601.00
478117.50	1378970.50	6977.00
478123.75	1378970.75	9179.00
478129.97	1378970.88	9879.00
478136.22	1378971.00	6397.00
478142.47	1378971.25	7274.00
477942.38	1378972.00	13236.00
477948.63	1378972.13	9967.00
477954.88	1378972.38	11300.00
477961.13	1378972.50	8218.00
477967.38	1378972.63	9440.00
477973.63	1378972.88	10503.00
477979.88	1378973.00	9231.00
477986.13	1378973.13	9719.00
477992.38	1378973.38	9376.00
478004.88	1378973.63	10601.00
478011.09	1378973.88	10454.00
478017.34	1378974.00	10345.00
478117.31	1378976.75	8334.00
4781235.56	1378976.88	12876.00

TABLE E-16C
(Continued)

Coordinates		
North	East	Reading (CPM)
478129.81	1378977.13	11289.00
478136.06	1378977.25	10453.00
478142.31	1378977.50	10017.00
477942.22	1378978.25	12146.00
477948.47	1378978.38	10870.00
477954.72	1378978.63	9246.00
477960.97	1378978.75	9091.00
477967.19	1378978.88	8781.00
478192.28	1378978.88	7752.00
478198.53	1378979.00	8916.00
478204.78	1378979.13	13393.00
478211.03	1378979.38	15190.00
478217.28	1378979.50	15307.00
478116.97	1378989.25	9519.00
478123.22	1378989.38	6727.00
478129.47	1378989.63	8043.00
478135.72	1378989.75	8269.00
478141.97	1378990.00	8613.00
477716.78	1378990.75	4925.00
477941.88	1378990.75	12766.00
477948.13	1378990.88	9555.00
477954.38	1378991.00	9694.00
477960.63	1378991.25	7634.00
478191.94	1378991.25	8772.00
477966.88	378991.38	7557.00
478198.19	1378991.50	8983.00
477766.75	1378992.13	4133.00
477816.75	1378993.50	4267.00
477866.72	1378994.88	4436.00
478116.81	1378995.50	10078.00
477891.72	1378995.63	8345.00
478123.06	1378995.63	8463.00
477897.97	1378995.75	7833.00
477904.22	1378996.00	6961.00
478135.56	1378996.00	8022.00
477910.47	1378996.13	9616.00
477916.72	1378996.25	4167.00
477916.72	1378996.25	8475.00
478141.78	1378996.25	7813.00
478117.16	1378983.00	8837.00
478123.41	1378983.13	9837.00
478129.66	1378983.38	9144.00
478135.88	1378983.50	6939.00

0315

TABLE E-16C
(Continued)

Coordinates		
North	East	Reading (CPM)
478142.13	1378983.75	7864.00
477942.03	1378984.50	11790.00
477948.28	1378984.63	11742.00
477954.53	1378984.88	9332.00
477960.78	1378985.00	9346.00
477967.03	1378985.13	7854.00
478192.13	1378985.13	9837.00
478198.38	1378985.25	7968.00
477941.69	1378997.00	10205.00
477947.94	1378997.13	9054.00
477954.19	1378997.25	9487.00
477960.44	1378997.50	8119.00
478191.78	1378997.50	7328.00
477966.69	1378997.63	4284.00
477966.69	1378997.63	8380.00
478198.03	1378997.75	8634.00
478016.66	1378999.00	4912.00
478066.66	1379000.38	5921.00
478116.63	1379001.75	7335.00
478116.63	1379001.75	3853.00
477891.56	1379001.88	9361.00
478122.88	1379001.88	7221.00
477897.78	1379002.00	8956.00
478129.13	1379002.13	7875.00
477904.03	1379002.25	10381.00
478135.38	1379002.25	7875.00
477910.28	1379002.38	8231.00
477916.53	1379002.50	10257.00
478141.63	1379002.50	6378.00
478166.63	1379003.13	3105.00
478191.59	1379003.75	10435.00
478197.84	1379004.00	7682.00
477891.38	1379008.13	9601.00
477897.63	1379008.25	9524.00
477903.88	1379008.38	9405.00
477910.13	1379008.63	10990.00
477916.38	1379008.75	11132.00
478191.44	1379010.00	6452.00
478197.69	1379010.25	12346.00
477891.22	1379014.38	9459.00
477897.44	1379014.50	8939.00
477903.69	1379014.63	8903.00
477909.94	1379014.88	9902.00

0316

TABLE E-16C
(Continued)

Coordinates		
North	East	Reading (CPM)
477916.19	1379015.00	10292.00
478191.25	1379016.25	12749.00
478197.50	1379016.50	10870.00
477891.03	1379020.63	9434.00
477897.28	1379020.75	9631.00
477903.53	1379020.88	10939.00
477909.78	1379021.13	8811.00
477916.03	1379021.25	9231.00
478191.09	1379022.50	12270.00
478197.34	1379022.75	9725.00
478190.91	1379028.75	9837.00
478197.16	1379029.00	15666.00
477715.41	1379040.75	4255.00
477765.41	1379042.13	3766.00
477815.38	1379043.50	3906.00
477865.34	1379044.88	5320.00
477915.34	1379046.25	4632.00
477965.31	1379047.63	4477.00
478015.31	1379049.00	4994.00
478115.28	1379051.75	3321.00
478165.25	1379053.13	4919.00
478215.22	1379054.50	5714.00
477989.63	1379073.25	9617.00
477995.88	1379073.50	9376.00
478002.13	1379073.63	13101.00
478008.38	1379073.88	12459.00
478014.63	1379074.00	9524.00
478039.63	1379074.63	9853.00
478045.84	1379074.88	9129.00
478052.09	1379075.00	8903.00
478058.34	1379075.25	8011.00
478064.59	1379075.38	7328.00
477989.47	1379079.50	14564.00
477995.72	1379079.75	12059.00
478001.94	1379079.88	10137.00
478008.19	1379080.13	9719.00
478014.44	1379080.25	13393.00
478039.44	1379080.88	10773.00
478045.69	1379081.13	8621.00
478051.94	1379081.25	9951.00
478058.19	1379081.38	9555.00
478064.44	1379081.63	7605.00
477989.28	1379085.75	16950.00

TABLE E-16C
(Continued)

Coordinates		
North	East	Reading (CPM)
477995.53	1379086.00	17442.00
478001.76	1379086.13	17868.00
478008.03	1379086.38	16485.00
478014.28	1379086.50	15465.00
478039.28	1379087.13	17008.00
478045.50	1379087.38	11236.00
478051.75	1379087.50	11651.00
478058.00	1379087.63	11860.00
478064.25	1379087.88	9757.00
477714.06	1379090.75	4445.00
477989.13	1379092.00	20980.00
477764.03	1379092.13	3557.00
477995.38	1379092.25	26087.00
478001.63	1379092.38	19597.00
478007.84	1379092.63	18634.00
478014.09	1379092.75	19842.00
478039.09	1379093.38	25642.00
477814.00	1379093.50	5027.00
478045.34	1379093.63	19355.00
478051.59	1379093.75	17544.00
478057.84	1379093.88	11729.00
478064.09	1379094.13	13016.00
477864.00	1379094.88	5032.00
477864.00	1379094.88	9804.00
477870.25	1379095.00	10472.00
477876.50	1379095.25	11091.00
477882.72	1379095.38	11561.00
477888.97	1379095.50	11473.00
477913.97	1379096.25	4439.00
477963.97	1379097.63	5379.00
477988.94	1379098.25	18633.00
477995.19	1379098.50	13162.00
478001.44	1379098.63	16665.00
478007.69	1379098.75	19481.00
478013.94	1379099.00	20271.00
478013.94	1379099.00	20135.00
478013.94	1379099.00	9772.00
478020.19	1379099.13	13393.00
478026.44	1379099.38	16484.00
478032.69	1379099.50	15190.00
478038.94	1379099.63	18462.00
478045.19	1379099.88	24692.00
477110.16	1379224.25	3885.00

5174

TABLE E-16C
(Continued)

Coordinates		
North	East	Reading (CPM)
477160.16	1379225.63	3675.00
477709.94	1379240.75	6112.00
477708.56	1379290.75	8023.00
477758.56	1379292.13	4048.00
477707.22	1379340.63	6837.00
477757.19	1379342.00	3884.00

0319

TABLE E-16D

INACTIVE FLYASH PILE
CIS EXPOSURE RATE MEASUREMENTS
OPERABLE UNIT 2 REMEDIAL INVESTIGATION
FERNALD ENVIRONMENTAL MANAGEMENT PROJECT

Coordinates		
North	East	Reading (microR/HR)
477809.91	1379243.50	13.00
477809.91	1379243.50	14.38
478115.28	1379051.75	13.88
477915.34	1379046.25	14.19

TABLE E-16E

INACTIVE FLYASH PILE
CIS BETA GAMMA DOSE RATE MEASUREMENTS
OPERABLE UNIT 2 REMEDIAL INVESTIGATION
FERNALD ENVIRONMENTAL MANAGEMENT PROJECT

Coordinates		
North	East	Reading (mRAD/HR)
478119.38	1378901.75	0.04
478069.38	1378900.38	0.02
478019.41	1378899.00	0.04
477969.44	1378897.75	0.02
478217.97	1378954.50	0.04
478167.97	1378953.13	0.03
478118.00	1378951.75	0.03
478068.03	1378950.38	0.03
478018.03	1378949.00	0.03
477968.06	1378947.63	0.04
478216.59	1379004.50	0.03
478166.63	1379003.13	0.03
478116.63	1379001.75	0.03
478066.66	1379000.38	0.03
478016.66	1378999.00	0.03
477966.69	1378997.63	0.03
478215.22	1379054.50	0.03
478165.25	1379053.13	0.03
478115.28	1379051.75	0.03
478065.28	1379050.38	0.04
478015.31	1379049.00	0.03
477965.31	1379047.63	0.03
478163.88	1379103.13	0.04
478113.91	1379101.75	0.04
478063.91	1379100.38	0.04
478013.94	1379099.00	0.06
477963.97	1379097.63	0.03
477869.47	1378895.00	0.02
477819.47	1378893.63	0.03
477769.50	1378892.25	0.04
477719.53	1378890.88	0.03
477918.06	1378946.25	0.05
477868.09	1378944.88	0.04

TABLE E-16E
(Continued)

Coordinates		
North	East	Reading (mRAD/HR)
477818.13	1378943.63	0.03
477768.13	1378942.25	0.03
477718.16	1378940.88	0.04
477916.72	1378996.25	0.03
477866.72	1378994.88	0.03
477816.75	1378993.50	0.04
477766.75	1378992.13	0.04
477716.78	1378990.75	0.03
477915.34	1379046.25	0.04
477865.34	1379044.88	0.03
477815.38	1379043.50	0.03
477765.41	1379042.13	0.03
477715.41	1379040.75	0.03
477913.97	1379096.25	0.04
477864.00	1379094.88	0.03
477814.00	1379093.50	0.03
477764.03	1379092.13	0.03
477714.06	1379090.75	0.02

0322

FIGURE E-16A

CIS FIDLER MEASUREMENT CONTOURS

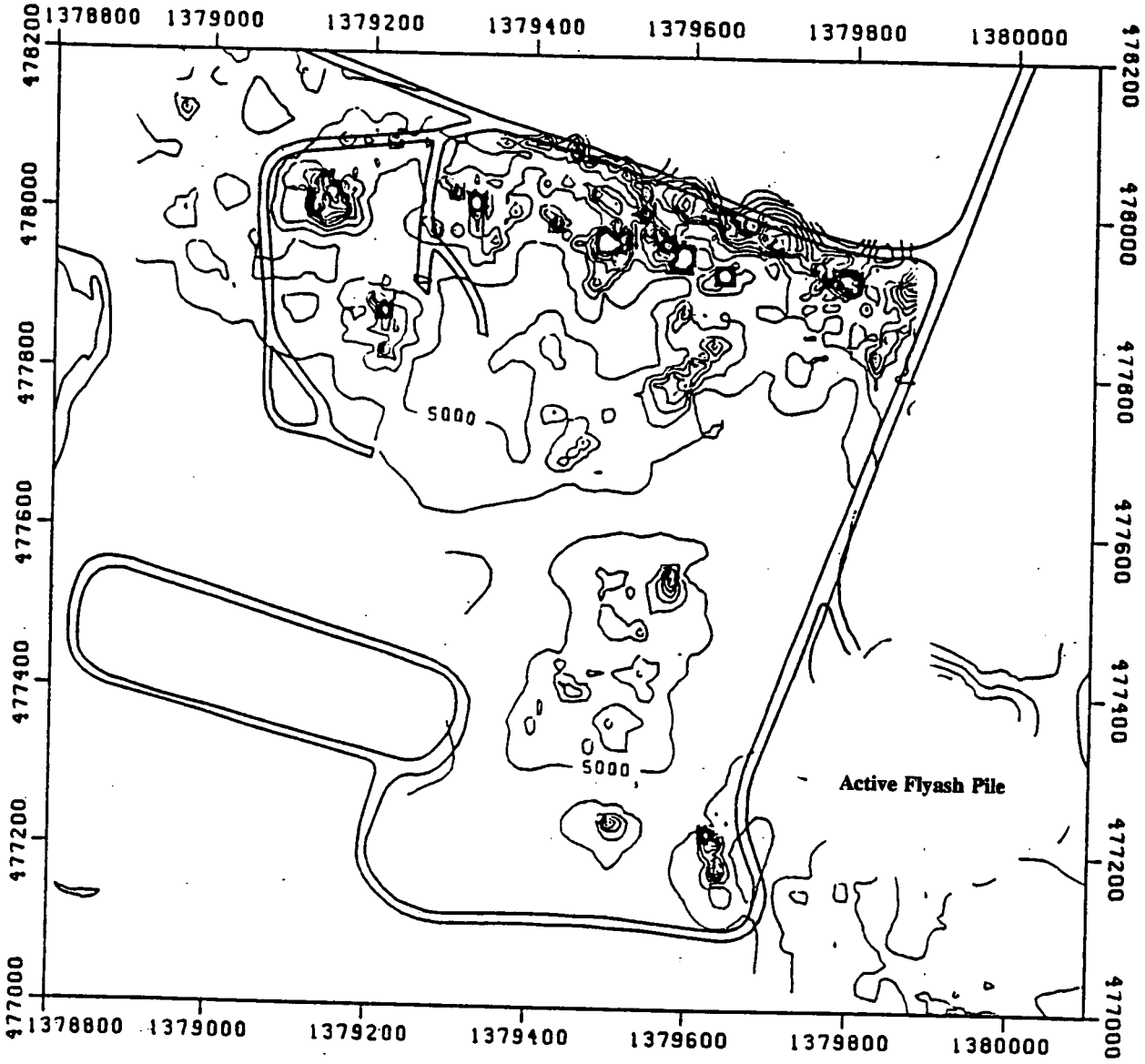

STATE PLANE COORDINATE SYSTEM

OHIO SOUTH ZONE

1 INCH = 225 FEET

0323

FIGURE E-16B

CIS EXPOSURE RATE CONTOURS

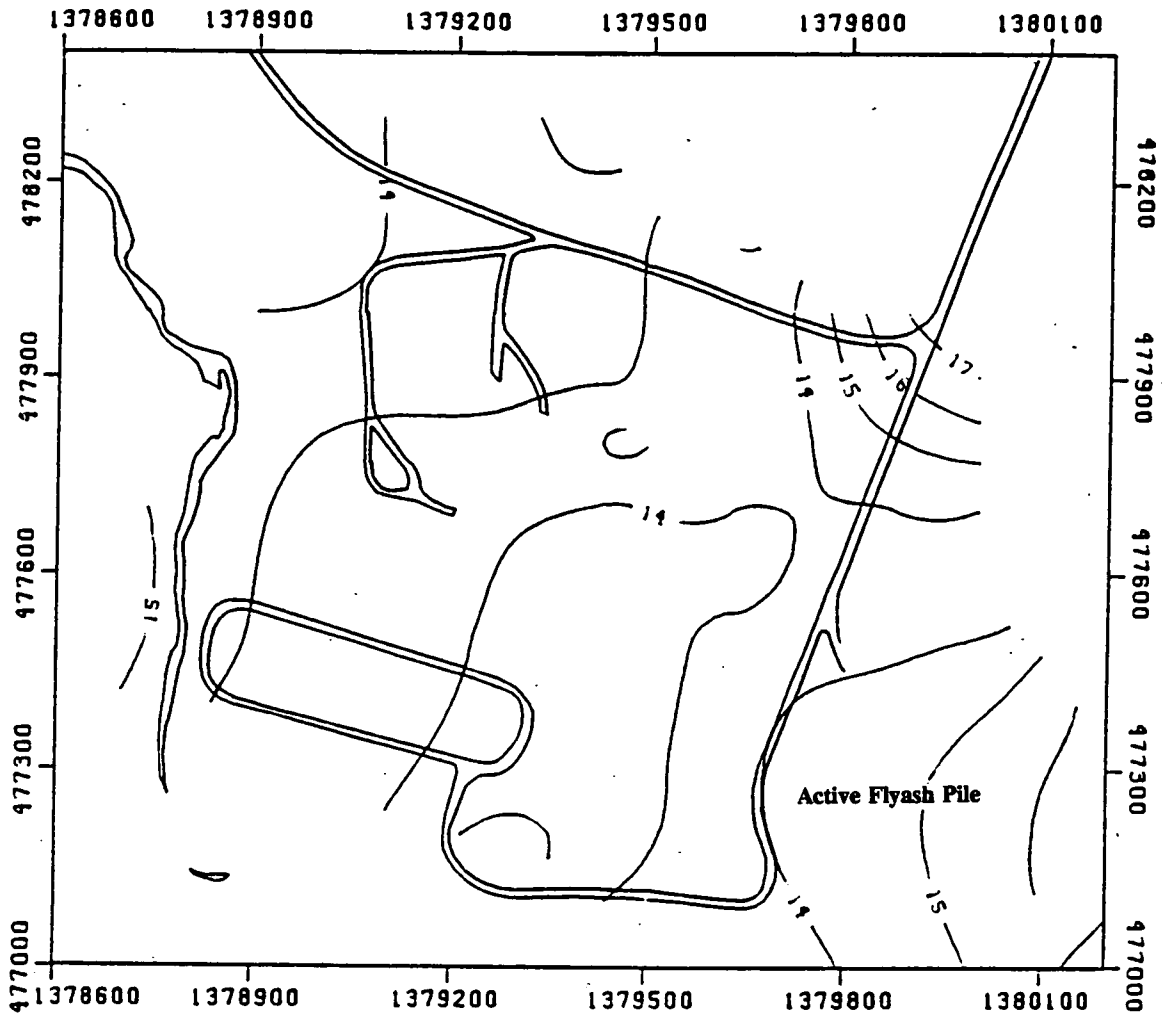

STATE PLANE

COORDINATE SYSTEM

0H10 SOUTH ZONE

1 INCH = 300 FEET

FIGURE E-16C

CIS BETA GAMMA DOSE RATE CONTOURS

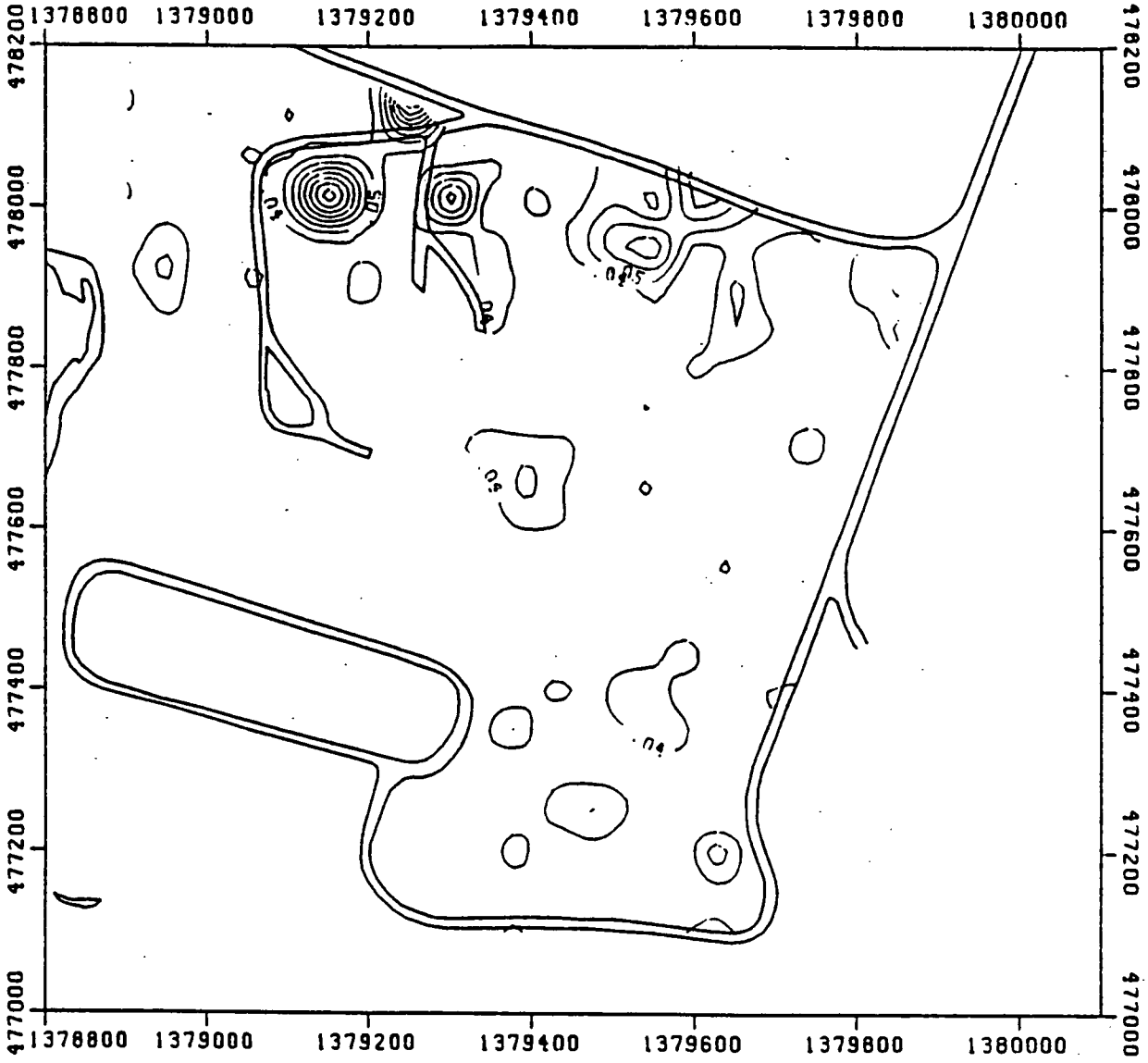

(mRad/hr) CONTOUR INTERVAL IS .01 mRad/hr

STATE PLANE C00RDINATE SYSTEM

0H10 S0UTH Z0NE

1 INCH = 225 FEET

0325

TABLE E-17A

INACTIVE FLYASH PILE
GEOTECHNICAL ANALYSIS
PHASE I FIELD INVESTIGATION
OPERABLE UNIT 2 REMEDIAL INVESTIGATION
FERNALD ENVIRONMENTAL MANAGEMENT PROJECT

SURFACE SAMPLES

Location	Wet Density (pcf)[a]	Dry Density (pcf)	Moisture Content (%)
#4	56.3	52.9	6.5
#5	53.7	47.4	13.3

SUBSURFACE SAMPLES

Analysis	Grain Size (mm)	Samples From Location 1708		
		67097	67098	67119
Moisture Conent (%)		22.1	32.7	30.3
Specific Gravity		2.3119	2.2553	2.339
Percent Passing by Sieve Analysis	75.0	100	100	100
	37.5	100	100	100
	19.0	100	100	100
	9.5	92.3	95.0	98.3
	4.75	84.5	89.6	94.2
	2.0	74.7	82.0	84.8
	0.85	63.7	73.0	72.9
	0.425	53.4	63.5	62.6
	0.25	44.6	54.6	53.8
	0.106	31.8	38.6	40.5
	0.075	27.8	33.7	36.2
Percent Passing by Hydrometer Analysis	0.0648	-[b]	42.6	40.9
	0.0634	42.0	-	-
	0.0480	-	-	35.5
	0.0473	-	37.1	-
	0.0462	36.7	-	-
	0.0349	-	-	30.2
	0.0346	-	30.6	-
	0.0336	31.3	-	-
	0.0225	-	22.9	-

0326

See footnotes at end of table

TABLE E-17A
(Continued)

SUBSURFACE SAMPLES
(Continued)

Analysis	Grain Size (mm)	Samples From Location 1724		
		67097	67098	67119
Percent Passing by Hydrometer Analysis (Continued)	0.0224	-	-	24.8
	0.0216	25.9	-	-
	0.0136	-	13.1	15.1
	0.0130	18.3	-	-
	0.0098	-	-	10.8
	0.0097	-	9.8	-
	0.0094	12.9	-	-
	0.0069	-	6.5	7.5
	0.0067	9.7	-	-
	0.0050	-	3.3	4.3
	0.0048	6.5	-	-
	0.0035	-	0.0	2.2
	0.0034	4.3	-	-
	0.0015	-	0.0	0.0
	0.0014	2.2	-	-

[a]pounds per cubic foot

[b]Not analyzed for that grain size

0327

TABLE E-17B

INACTIVE FLYASH PILE
GEOTECHNICAL ANALYSIS
PHASE II FIELD INVESTIGATION
OPERABLE UNIT 2 REMEDIAL INVESTIGATION
FERNALD ENVIRONMENTAL MANAGEMENT PROJECT

Location	Sample No.	Date Sampled	Sample Interval (ft)[a]	Specific Gravity	Moisture Content (%)	Bulk Density Unit Weight (pcf)[b]	Dry Density (pcf)	Atterberg Limits			Permeability (cm/s)
								Liquid Limit	Plastic Limit	Plasticity Index	
IFP-SS-05	111826	4/22/93	0.0-0.5	-[c]	23.8	-	-	-	-	-	-
1994	116304	5/13/93	28.0-30.0	-	-	133.5	113.9	-	-	-	-
	116309	5/13/93	32.0-34.0	2.2730	20.0	-	-	34	16	18	-
1995	116089	5/11/93	3.0-5.0	-	-	90.2	67.9	-	-	-	-
1996	112080	5/11/93	10.0-12.0	-	-	57.4	40.1	-	-	-	-
1997	116249	5/11/93	32.0-34.0	-	-	128.2	106.5	-	-	-	-
	116255	5/11/93	36.0-38.0	2.7276	13.8	-	-	NP[d]	NP	NP	-
1998	112040	5/11/93	0.0-2.0	2.4096	39.3	-	-	NP	NP	NP	-
	112041	5/11/93	2.0-4.0	-	-	75.9	48.4	-	-	-	-
	112063	5/11/93	14.0-16.0	2.7391	20.8	-	-	NP	NP	NP	-
	112064	5/11/93	16.0-17.0	-	-	142.3	124.5	-	-	-	$3.2E^{-8}$

[a]The sample interval is depth, in feet, below the ground surface

[b]Pounds per cubic foot

[c]The sample not analyzed for this parameter

[d]NP - Nonplastic

FER\CRU2RI\JLG\TABE-17B\February 3, 1994 5:02pm

0328

5174

TABLE E-17C

INACTIVE FLYASH PILE
SIEVE ANALYSIS - ASTM D 422
PHASE II FIELD INVESTIGATION
OPERABLE UNIT 2 REMEDIAL INVESTIGATION
FERNALD ENVIRONMENTAL MANAGEMENT PROJECT

Location	Sample No.	Date Sampled	Sample Interval (ft)[a]	Classification[b]	Sieve Analysis (% Passing Sieve No.)											
					3"	1.5"	0.75"	0.375"	#4	#10	#20	#40	#60	#100	#140	#200
IFP-SD-02	111823	4/21/93	0.0-0.5	NA[c]	100	100	97.3	96.9	96.6	94.1	86.7	76.5	63.9	50.2	44.5	41.4
IFP-SS-05	111826	4/22/93	0.0-0.5	NA	100	100	100	94.8	90.4	83.9	75.1	67.0	59.7	53.2	49.8	47.2
1994	116309	5/13/93	32.0-34.0	CL	100	100	100	100	99.7	98.9	97.3	88.4	77.3	70.0	66.3	63.5
1997	116255	5/11/93	36.0-38.0	NP	100	70.5	64.8	61.2	55.4	46.9	42.3	36.3	30.2	26.4	24.8	23.6
1998	112040	5/11/93	0.0-2.0	NP	100	100	94.1	93.7	92.3	86.7	75.7	65.2	56.9	49.4	44.2	39.1
	112063	5/11/93	14.0-16.0	NP	100	100	91.4	90.6	86.5	78.8	74.1	70.9	66.4	59.1	54.5	50.9

[a]The sample interval is depth, in feet, below the ground surface.

[b]Unified Soil Classification System (USCS)

CL = Inorganic clays of low to medium plasticity, gravelly clays, sandy clays, silty clays, lean clays.
NP = Nonplastic

[c]NA = Not Applicable

0329

TABLE E-17D

INACTIVE FLYASH PILE
HYDROMETER ANALYSIS - ASTM D 422
PHASE II FIELD INVESTIGATION
OPERABLE UNIT 2 REMEDIAL INVESTIGATION
FERNALD ENVIRONMENTAL MANAGEMENT PROJECT

LOCATION: IFP-SD-02 SAMPLE NO.: 111823 DEPTH: 0.0-0.5 ft.

Particle Diameter (mm)	0.06590	0.04747	0.03463	0.02256	0.01321	0.00944	0.00662	0.00471	0.00331	0.00142
Percent Finer	41.9	37.0	27.3	17.5	12.7	9.7	7.8	5.8	4.9	4.9

LOCATION: IFP-SS-05 SAMPLE NO.: 111826 DEPTH: 0.0-0.5 ft.

Particle Diameter (mm)	0.06493	0.04631	0.03302	0.02169	0.01284	0.00921	0.00646	0.00463	0.00327	0.00140
Percent Finer	38.4	36.8	34.3	25.3	18.8	14.7	12.3	9.8	7.4	6.5

LOCATION: 1994 SAMPLE NO.: 116309 DEPTH: 32.0-34.0 ft.

Particle Diameter (mm)	0.04858	0.03517	0.02275	0.01337	0.00961	0.00690	0.00488	0.00337	0.00145
Percent Finer	62.7	56.4	50.2	40.8	35.5	31.4	27.2	24.0	16.7

LOCATION: 1997 SAMPLE NO.: 116255 DEPTH: 36.0-38.0 ft.

Particle Diameter (mm)	0.06200	0.04484	0.03239	0.02133	0.01283	0.00917	0.00653	0.00465	0.00326	0.00132
Percent Finer	22.4	19.9	17.4	12.4	6.6	5.0	4.1	3.3	3.3	1.7

5174

TABLE E-17D
(Continued)

LOCATION: 1998 SAMPLE NO.: 112040 DEPTH: 0.0-2.0 ft.

Particle Diameter (mm)	0.06210	0.04537	0.03246	0.02099	0.01243	0.00891	0.00634	0.00446	0.00314	0.00131
Percent Finer	40.1	30.6	26.7	20.1	11.5	7.6	4.8	2.9	1.9	0.0

LOCATION: 1998 SAMPLE NO.: 112063 DEPTH: 14.0-16.0 ft.

Particle Diameter (mm)	0.06347	0.04629	0.03358	0.02203	0.01294	0.00922	0.00654	0.00459	0.00322	0.00135
Percent Finer	28.7	22.8	17.6	9.8	5.9	3.9	3.3	2.6	2.0	0.7

TABLE E-18A

INACTIVE FLYASH PILE
CIS EM 31 GEOPHYSICAL MEASUREMENTS
OPERABLE UNIT 2 REMEDIAL INVESTIGATION
FERNALD ENVIRONMENTAL MANAGEMENT PROJECT

		MMHOS/M (Unit)	
North Coordinate	East Coordinate	Horizontal Result	Vertical Result
478118.01	1378951.78	200.00	240.00
478068.03	1378950.41	235.00	255.00
478116.64	1379001.75	340.00	420.00
478066.66	1379000.38	260.00	300.00
477986.69	1378998.19	420.00	570.00
477966.69	1378997.64	540.00	500.00
477968.07	1378947.67	210.00	265.00
477941.70	1378996.95	480.00	570.00
477916.71	1378996.28	380.00	480.00
478040.67	1378999.67	310.00	240.00
478016.68	1378999.02	380.00	440.00
477976.69	1378997.92	470.00	450.00
477941.02	1379021.95	340.00	330.00
477916.03	1379021.28	300.00	360.00
477891.04	1379020.59	285.00	310.00
478115.27	1379051.73	410.00	390.00
478095.28	1379051.19	300.00	230.00
478085.28	1379050.91	220.00	430.00
478075.29	1379050.64	260.00	200.00
478065.29	1379050.36	260.00	280.00
478113.90	1379101.72	31.00	49.00
478063.92	1379100.34	36.00	57.00
478013.94	1379098.98	23.00	42.00
478014.21	1379088.98	44.00	110.00
477963.96	1379097.61	50.00	84.00
477913.98	1379096.25	16.50	120.00
477862.63	1379144.86	28.50	35.00
477861.26	1379194.84	25.00	25.50
477809.91	1379243.45	28.00	30.00
477823.54	1379293.84	30.00	-100.00
477808.54	1379293.44	15.00	-100.00
477669.54	1378889.48	4.80	6.60
477668.18	1378939.47	7.00	9.50
477668.18	1378939.47	7.00	9.50
477666.81	1378989.44	8.90	12.00

0332

TABLE E-18B

INACTIVE FLYASH PILE
CIS EM 34 GEOPHYSICAL MEASUREMENTS
OPERABLE UNIT 2 REMEDIAL INVESTIGATION
FERNALD ENVIRONMENTAL MANAGEMENT PROJECT

		MMHOS/M (Unit)	
North Coordinate	East Coordinate	Horizontal Result	Vertical Result
478118.01	1378951.78	110.00	-100.00
478116.64	1379001.75	260.00	-100.00
478115.27	1379051.73	170.00	-100.00
478113.90	1379101.72	50.00	53.00
478063.92	1379100.34	34.00	25.00
478065.29	1379050.36	175.00	-100.00
478066.66	1379000.38	180.00	85.00
478068.03	1378950.41	150.00	-100.00
478018.05	1378949.05	120.00	50.00
478016.68	1378999.02	300.00	-100.00
478015.31	1379049.00	145.00	-100.00
478013.94	1379098.98	35.00	66.00
477963.96	1379097.61	45.00	94.00
477965.33	1379047.63	235.00	-100.00
477966.69	1378997.64	280.00	-100.00
477916.71	1378996.28	210.00	-100.00
477913.98	1379096.25	130.00	-100.00
477864.00	1379094.88	215.00	-100.00
477415.53	1379032.58	8.50	9.00
477418.27	1378932.63	11.00	10.50
477421.00	1378832.66	13.00	-100.00
477520.97	1378835.39	6.00	-100.00
477518.23	1378935.36	8.00	11.50
477515.50	1379035.31	20.00	4.50
477615.46	1379038.05	10.00	10.50
477618.19	1378938.09	9.50	6.50
478231.00	1379082.00	20.00	9.00
476995.00	1379083.00	10.00	7.50
477109.00	1378870.00	9.00	7.00
477249.00	1378704.00	10.00	9.50
477453.00	1378680.00	12.50	9.00
477654.00	1378685.00	10.00	10.00
477790.00	1378702.00	10.00	8.50
477932.00	1378709.00	10.50	7.50
478074.00	1378626.00	8.50	7.50
478167.00	1378517.00	7.00	8.00
478200.00	1378342.00	12.50	8.00
478201.00	1378189.00	10.00	7.00

0333

FIGURE E-18A

CIS GEOPHYSICAL ANALYSIS
EM 31 HORIZONTAL CONTOUR MAP
(CONTOUR INTERVALS = 10 AND 100 MMHOS/M)

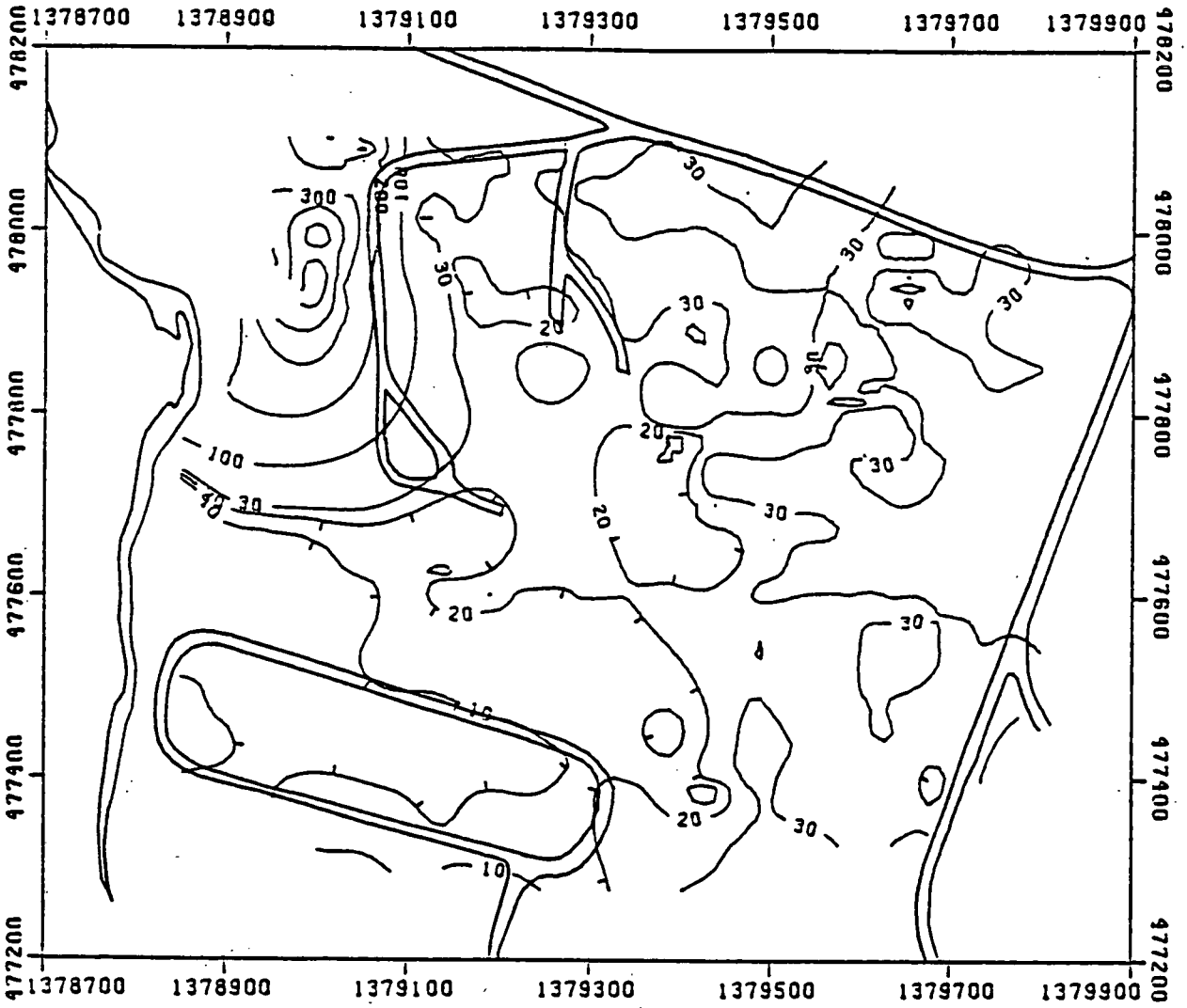

5174

FIGURE E-18B

CIS GEOPHYSICAL ANALYSIS
EM 31 VERTICAL CONTOUR MAP
(CONTOUR INTERVALS = 10 AND 100 MMHOS/M)

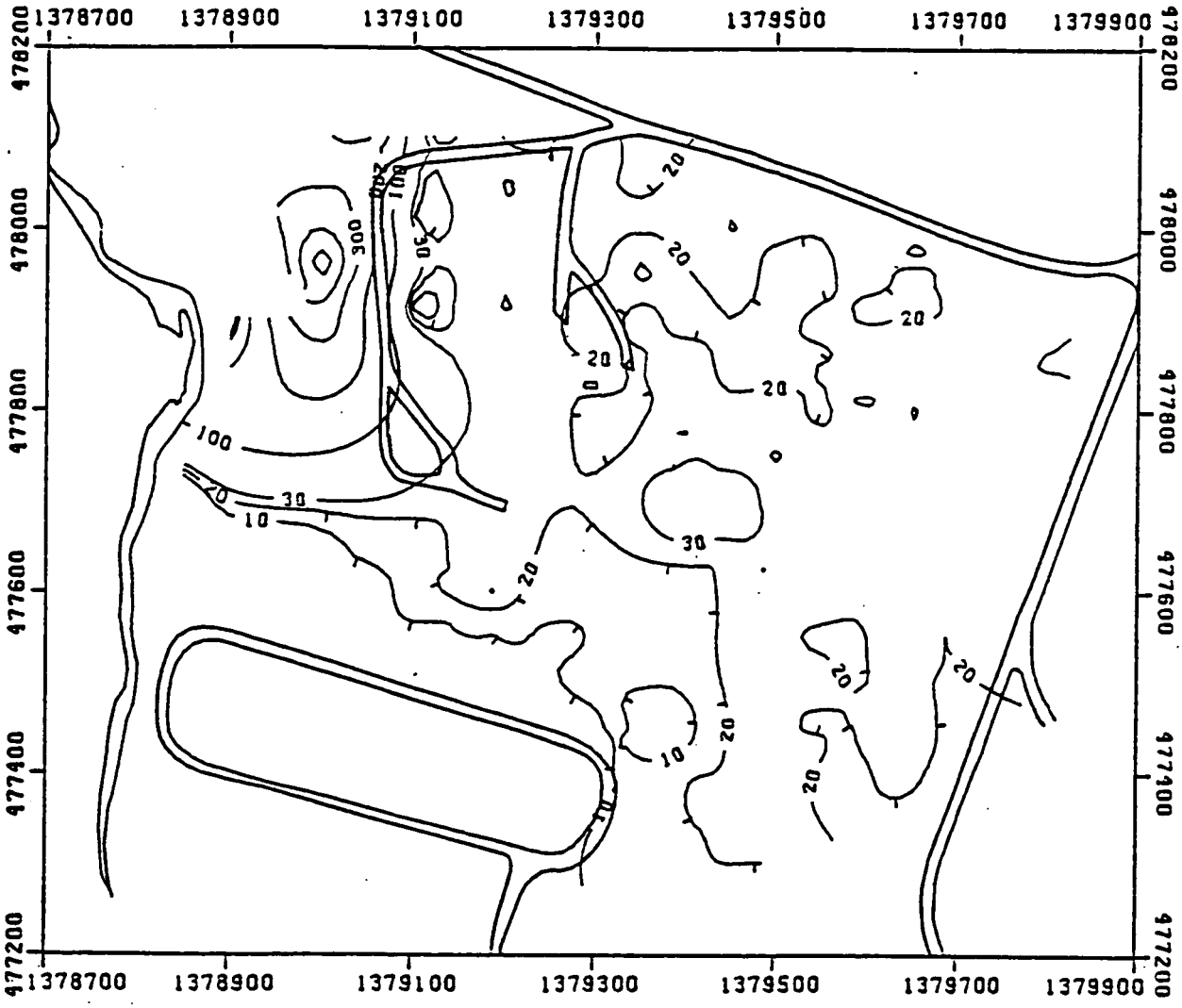

FIGURE E-18C

CIS GEOPHYSICAL ANALYSIS
EM 34-3 HORIZONTAL CONTOUR MAP
(CONTOUR INTERVALS = 10 AND 100 MMHOS/M)

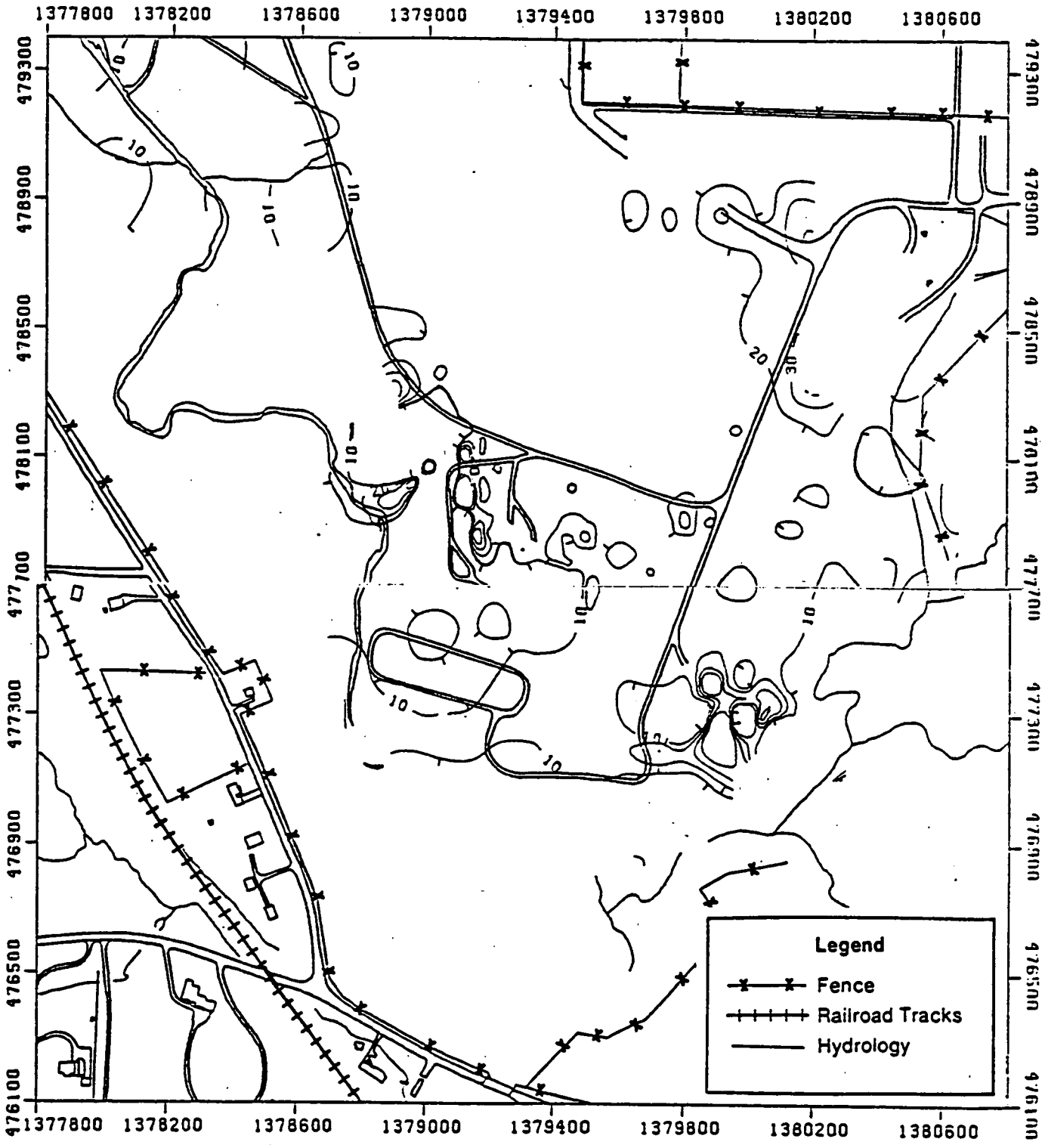

FIGURE E-18D
CIS GEOPHYSICAL ANALYSIS
EM 34-3 VERTICAL CONTOUR MAP
(CONTOUR INTERVALS = 10 AND 100 MMHOS/M)

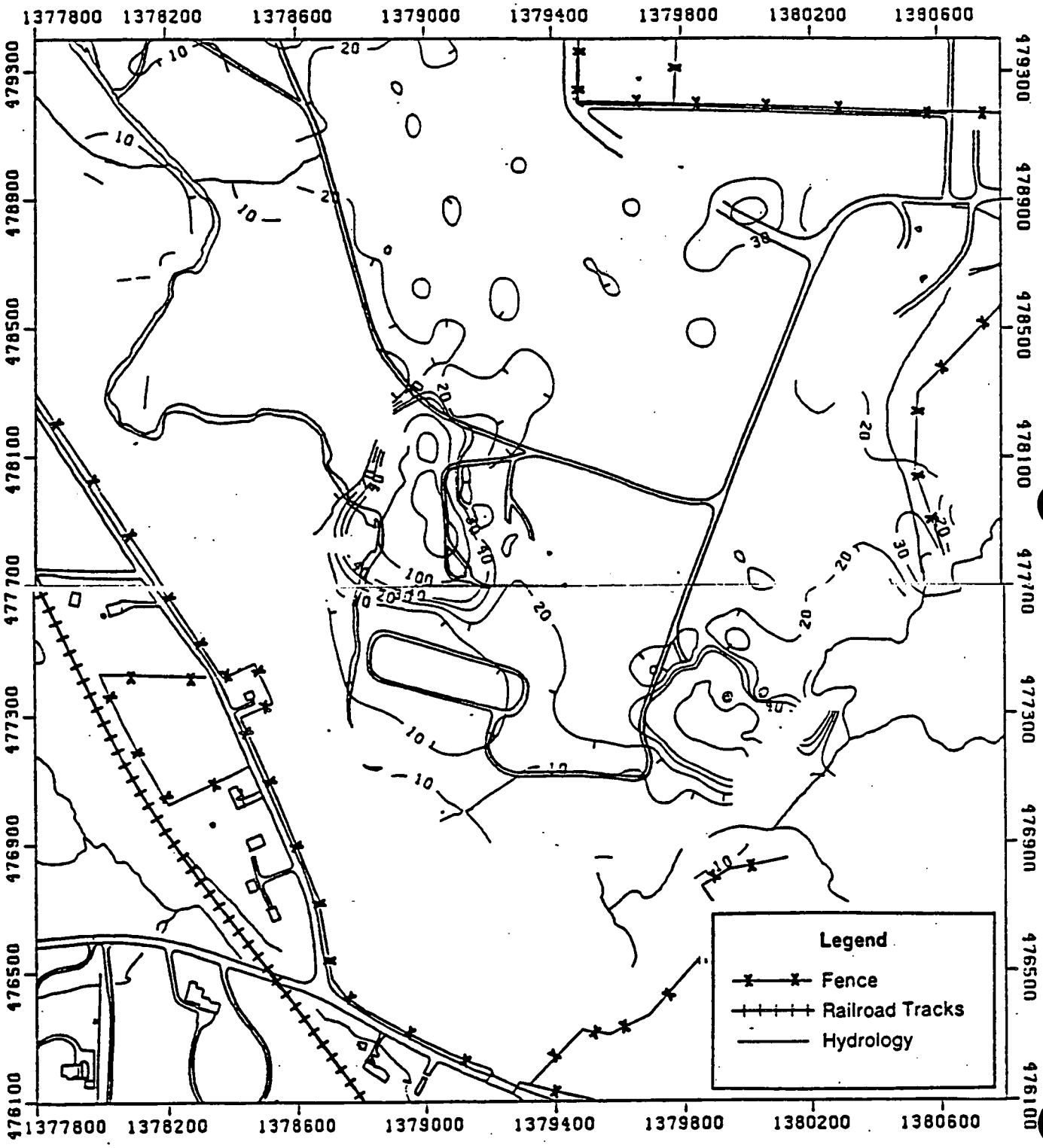

PROJECT NUMBER: 602 3.2	PROJECT NAME: FMPC RI/FS		
BORING NUMBER: 1016	COORDINATES: NORTH 477,617.13 EAST 1,379,149.06	DATE:	10/15/87
GROUND ELEVATION: N/A	GWL: Depth N/A Date/Time N/A	DATE STARTED:	10/15/87
ENGINEER/GEOLOGIST: WILL KEGLEY	Depth N/A Date/Time N/A	DATE COMPLETED:	10/16/87
DRILLING METHODS: CABLE-TOOL		PAGE 1 OF 2	

DEPTH	SAMPLE / DATE / TIME	BLOWS ON SAMPLE	RECOVERY	INCHES		USCS SYMBOL	TSF	REMARKS
0.0 1.5	007232 10/15/87 1445	2 2 5	16		MEDIUM STIFF, BLACK (2.5Y 2/), SILT, SOME SAND, FLYASH, DRY.	ML	0.1	Hnu=0 ppm α =0 cpm BΓ =40-80 cpm
3.0	007233 10/15/87 1500	4 4 3	14		LOOSE, DARK YELLOWISH BROWN (10YR 4/4), SILTY SAND, DRY.	SM	N/A	Hnu=0 ppm α =0 cpm BΓ =40-80 cpm
4.5	007234 10/15/87 1510	4 5 4	13		LOOSE, BROWNISH YELLOW (10YR 6/8), SAND, SOME SILT, TRACE CLAY, DRY.	SM	N/A	Hnu=0 ppm α =0 cpm BΓ =40-80 cpm
6.0	007235 10/15/87 1520	5 7 12	14		MEDIUM DENSE, YELLOWISH BROWN (10YR 5/6), GRAVELLY SAND, TRACE SILT, DRY.	SW	N/A	Hnu=0 ppm α =0 cpm BΓ =40-80 cpm
7.5	007236 10/15/87 1525	15 24 16	14		DENSE, YELLOWISH BROWN (10YR 5/6), GRAVELLY SAND, DRY.	SW	N/A	Hnu=0 ppm α =0 cpm BΓ =160 cpm
9.0	007237 10/15/87 1530	13 85 42	17		VERY DENSE, LIGHT YELLOWISH BROWN (10YR 6/4), GRAVELLY SAND, TRACE CLAY, DRY.	SW	N/A	Hnu=0 ppm α =0 cpm BΓ =40-80 cpm
10.5	007223 007238 10/15/87 1700	15 23 24	12		DENSE, DARK YELLOWISH BROWN (10YR 4/4), GRAVELLY SAND, DRY.	SW	N/A	Hnu=0 ppm α =0 cpm BΓ =40-80 cpm
12.0	007239 10/15/87 1720	15 16 18	10		DENSE, REDDISH YELLOW (7.5YR 7/6), GRAVELLY SAND, DRY.	SW	N/A	Hnu=0 ppm α =0 cpm BΓ =40-80 cpm
13.5	007240 10/15/87 1735	9 12 26	8		DENSE, REDDISH YELLOW (7.5YR 6/6), GRAVELLY SAND, DRY.	SW	0.1	Hnu=0 ppm α =0 cpm BΓ =40-80 cpm
15.0	007241 10/15/87 1750	8 10 13	10		MEDIUM DENSE, LIGHT BROWN (7.5YR 6/4), SAND, DRY.	SP	0.1	Hnu=0 ppm α =0 cpm BΓ =40-80 cpm
16.5	007242 10/16/87 0925	2 6 10	12		MEDIUM DENSE, DARK YELLOWISH BROWN (10YR 4/4), SAND, TRACE GRAVEL, WET.	SP	N/A	Hnu=0 ppm α =0 cpm BΓ =40-80 cpm
18.0	007243 10/16/87 1015	4 13 14	14		MEDIUM DENSE, STRONG BROWN (7.5YR 5/6), SAND, TRACE GRAVEL, WET.	SP	N/A	Hnu=0 ppm α =0 cpm BΓ =40-80 cpm
19.5	007244 10/16/87 1040	3 4 7	17		MEDIUM DENSE, DARK YELLOWISH BROWN (10YR 4/4), SAND, WET.	SP	N/A	Hnu=0 ppm α =0 cpm BΓ =40-80 cpm

0338

PROJECT NUMBER: 602 3.2	PROJECT NAME: FMPC RI/FS		
BORING NUMBER: 1016	COORDINATES: NORTH 477,617.13 EAST 1,379,149.06	DATE:	10/15/87
GROUND ELEVATION: N/A	GWL: Depth N/A Date/Time N/A	DATE STARTED:	10/15/87
ENGINEER/GEOLOGIST: WILL KEGLEY	Depth N/A Date/Time N/A	DATE COMPLETED:	10/16/87
DRILLING METHODS: CABLE-TOOL		PAGE 2 OF 2	

DEPTH	SAMPLE	DATA TIME	BLOWS ON SAMPLE	RECOVERY		USCS SYMBOL	TSF	REMARKS
21.0	007350 10/16/87 1100		2 7 13	18	MEDIUM DENSE, DARK YELLOWISH BROWN (10YR 4/4), SAND, TRACE GRAVEL, WET.	SP	N/A	Hnu=0 ppm α =0 cpm BΓ =40-80 cpm
22.5	007351 10/16/87		4 9 10	18	MEDIUM DENSE, DARK YELLOWISH BROWN (10YR 4/4), SAND, TRACE GRAVEL, WET.	SP	N/A	Hnu=0 ppm α =0 cpm BΓ =40-80 cpm

BOTTOM OF BORING 22.5

NOTES:
MONITORING WELL INSTALLED.

0339

PROJECT NUMBER: 602 3.2	PROJECT NAME: CRU2 RI PHASE I FIELD INVESTIGATION	
BORING NUMBER: 1047	COORDINATES: NORTH 478258.45 EAST 1379062.49	DATE:15-OCT-87
GROUND ELEVATION: 568.7	GWL: Depth Date/Time	DATE STARTED: 15-OCT-87
ENGINEER/GEOLOGIST: LOWELL WILLE	Depth Date/Time	DATE COMPLETE: 17-OCT-87
DRILLING METHOD: CABLE-TOOL DRILLING		

DEPTH	SAMPLE	DATE TIME	BLOWS ON SAMPLE	RECOVERY INCHES		USCS SYMBOL	TSF	REMARKS
1.5	007295	10/15/87 17:30	3 5 10	13	SOFT BLACK (7 1/2YR, 3/6) ORGANIC RICH SILT, SOME SAND AND CLAY - MOIST. STIFF BROWN (10YR, 5/5) SILTY CLAY, TRACE SAND - DRY. HARD BROWN (10YR, 5/6) CLAY - SOME SILT, TRACE FINE SAND - DRY.	OL ML CL	0.5 2.0 <5	PID=0 ppm α=15 ppm βΓ=45 cpm
1.5 3.0	007296	10/15/87 17:35	6 13 20	12	HARD BROWN (10YR, 5/6) MOTTLED GRAY CLAY, SOME SILT - DRY.	CL	<5	PID=0 ppm α=2 ppm βΓ=45 cpm
3.0 4.5	007297	10/15/87 17:40	8 16 21	11	HARD BROWN (10YR, 4/8) MOTTLED GRAY CLAY, SOME SILT, TRACE SAND AND GRAVEL - DRY. HARD GRAY (7 1/2YR) SILTY CLAY, TRACE GRAVEL, SOME SAND - DRY	CL CL	<5 <5	PID=0 ppm α=2 ppm βΓ=45 cpm
4.5 6.0	007298	10/15/87 17:45	23 27 31	16	HARD BROWN (10YR, 7/4) MOTTLED GRAY CLAY, TRACE SAND AND GRAVEL, SOME SILT - DRY.	CL	<5	PID=0 ppm α=2 ppm βΓ=45 cpm
6.0 7.5	007299	10/16/87 10:45	6 11 14	13	HARD BROWN (10YR, 6/4) CLAY, SOME SILT AND FINE SAND, TRACE MED. TO COARSE SAND - DRY.	CL	4.0	PID=0 ppm α=2 ppm βΓ=45 cpm
7.5 9.0	007300	10/16/87 10:50	15 18 21	12	HARD BROWN (10YR, 6/4) GRAVELLY CLAY, SOME SILT AND SAND, TRACE PEBBLES - DRY	CL	N/A	PID=0 ppm α=2 ppm βΓ=45 cpm
9.0 10.5	007301	10/16/87 11:30	2 4 5	11	SOFT, GRAY (7.5YR, 5/0) SANDY CLAY, SOME SILT AND GRAVEL, TRACE PEBBLES - DRY.	CL	.50	PID=0 ppm α=2 ppm βΓ=45 cpm
10.5 12.0	007302	10/16/87 11:40	8 10 13	14	SOFT GRAY (7.5YR, 5/0)CLAY, SOME SAND AND SILT, TRACE FINE GRAVEL - MOIST.	CL	0.5	PID=0 ppm α=2 ppm βΓ=45 cpm
14.0 15.5	007304	10/16/87 16:10	5 15 37	14	STIFF GREY (7.5YR, 6/0) SANDY CLAY SOME SILT AND GRAVEL, TRACE PEBBLES - DRY.	CL	<5	PID=0 ppm α=2 ppm βΓ=45 cpm
17.0 18.5	007306	10/16/87 17:20	11 41 48	16	HARD GRAY 7 1/2YR 5/1 SANDY CLAY, SOME SILT AND GRAVEL, TRACE PEBBLES - DRY. DENSE BROWN 10YR 5/6 FINE SAND - SOME SILT, CLAY AND MEDIUM SAND - DRY. DENSE BROWN 10YR 7/8 SAND, SOME GRAVEL, SILT, AND CLAY - DRY	CL SW SP	<5 N/A N/A	PID=0 ppm α=2 ppm βΓ=60 cpm
18.5 20.0	007307	10/16/87 17:45	14 40 50	18	DENSE BROWN 10YR 7/8 SAND, SOME GRAVEL, SILT, AND CLAY, TRACE PEBBLES - DRY	SP	N/A	PID=0 ppm α=2 ppm βΓ=60 cpm

NOTES:

SAA = Same as Above
PID = Photoionization Detector
N/A = Not Applicable

PROJECT NUMBER: 602 3.7	PROJECT NAME: CRU2 PHASE I FIELD INVESTIGATION	
BORING NUMBER: 1708	COORDINATES: NORTH 477710.64 EAST 1379166.88	DATE:14-JUN-91
GROUND ELEVATION: 570.9	GWL: Depth Date/Time	DATE STARTED: 14-JUN-91
ENGINEER/GEOLOGIST: J. LEAR	Depth Date/Time	DATE COMPLETE: 17-JUN-91
DRILLING METHOD: AUGER		

DEPTH	SAMPLE / DATA / TIME	BLOWS ON SAMPLE	RECOVERY INCHES		USCS SYMBOL	TSF	REMARKS
1.5	067091 06/14/91 15:00	25 27 19	18	V. HARD BLACK, (2.5Y, 2/) ASPHALT, TRACE GRAVEL, DRY, .25-V. HARD BROWN TO YELLOWISH BROWN (10YR, 5/3 TO 10YR, 4/6) SILTY CLAY, SOME GRAVEL LOW PLASTICITY, DRY.	CL	>4.0	PID=0 ppm α=50-100 ppm βΓ=0 cpm
1.5 3.0	067092 06/14/91 15:05	14 14 14	18	V. HARD, BLACK, (2.5Y, 2/) ASPHALT, TRACE GRAVEL, DRY, .25-V. HARD BROWN TO YELLOWISH BROWN, (10YR, 5/3 TO 10YR, 4/6) SILTY CLAY, SOME GRAVEL LOW PLASTICITY, DRY, 1.75-DENSE, VERY DARK GRAY (2.5Y, 3/) SILT, TRACE SAND & GRAVEL, DRY.	CL ML	>4.0	PID=0 ppm α=50-100 ppm βΓ=0 cpm
3.0 4.5	067093 06/14/91 15:10	14 14 18	18	DENSE, VERY DARK GRAY (2.5Y, 3/) SILT, TRACE SAND & GRAVEL, DRY, 4.0-DENSE, BLACK (2.5Y, 2/) SILT, TRACE SAND TRACE GRAVEL, SL. MOIST.	ML ML	N/A	PID=0 ppm α=50-100 ppm βΓ=0 cpm
4.5 6.0	067094 06/14/91 15:15	6 6 5	18	4.0-DENSE, BLACK, (2.5Y, 2/) SILT, TRACE SAND TRACE GRAVEL, SL. MOIST, MED DENSE, 5.25-MED DENSE, VERY DARK GRAY (2.5Y, 3/) SILT, SOME SAND, SOME GRAVEL, DRY.	ML ML	N/A	PID=0 ppm α=50-100 ppm βΓ=0 cpm
6.0 7.5	067095 06/14/91 15:50	2 2 2	10	VERY LOOSE, BLACK (2.5Y, 2/) SILT, TRACE SAND AND GRAVEL, SL. MOIST.	ML	N/A	PID=0 ppm α=50-100 ppm βΓ=0 cpm
7.5 9.0	067096 06/14/91 15:55	2 2 2	16	VERY LOOSE, BLACK (2.5Y, 2/) SILT, TRACE SAND AND GRAVEL, SL. MOIST.	ML	N/A	PID=0 ppm α=50-100 ppm βΓ=0 cpm
12.0 13.5	067099 06/16/91 09:00	3 3 3	13	VERY LOOSE, BLACK, (2.5Y, 2/) SILT, TRACE SAND AND GRAVEL, SL. MOIST, SOME SAND SOME GRAVEL.	ML	N/A	PID=0 ppm α=50-100 ppm βΓ=0 cpm
13.5 15.0	067100 06/16/91 09:05	3 3 4	18	VERY LOOSE, BLACK, (2.5Y, 2/) SILT, TRACE SAND AND GRAVEL, SL. MOIST, SOME SAND SOME GRAVEL.	ML	N/A	PID=0 ppm α=50-100 ppm βΓ=0 cpm
15.0 16.5	067101 06/16/91 09:10	3 3 4	18	VERY LOOSE, BLACK, (2.5Y, 2/) SILT, TRACE SAND AND GRAVEL, SL. MOIST, SOME SAND SOME GRAVEL.	ML	N/A	PID=0 ppm α=50-100 ppm βΓ=0 cpm
16.5 18.0	067102 06/16/91 09:15	5 2 3	18	VERY LOOSE, BLACK, (2.5Y, 2/) SILT, TRACE SAND AND GRAVEL, SL. MOIST, SOME SAND SOME GRAVEL.	ML	N/A	PID=0 ppm α=50-100 ppm βΓ=0 cpm
18.0 19.5	067103 06/16/91 10:15	5 5 5	0	NO RECOVERY	N/A	N/A	PID=0 ppm α=50-100 ppm βΓ=0 cpm
19.5 21.0	067104 06/16/91 10:20	5 3 4	18	LOOSE, BLACK (2.5Y, 2/) SILT, TRACE SAND TRACE GRAVEL, SL. MOIST, WOOD CHIP 2".	ML	N/A	PID=0 ppm α=50-100 ppm βΓ=0 cpm

NOTES:

SAA = Same as Above
PID = Photoionization Detector
N/A = Not Applicable

0341

PROJECT NUMBER: 602 3.7	PROJECT NAME: CRU2 PHASE I FIELD INVESTIGATION	
BORING NUMBER: 1708	COORDINATES: NORTH 477710.64 EAST 1379166.88	DATE:14-JUN-91
GROUND ELEVATION: 570.9	GWL: Depth Date/Time	DATE STARTED: 14-JUN-91
ENGINEER/GEOLOGIST: J. LEAR	Depth Date/Time	DATE COMPLETE: 17-JUN-91
DRILLING METHOD: AUGER		

DEPTH	SAMPLE	DATE TIME	BLOWS ON SAMPLE	RECOVERY	INCHES		USCS SYMBOL	TSF	REMARKS
21.0 22.5	067105	06/16/91 10:25	2 2 3	18		LOOSE, BLACK (2.5Y, 2/) SILT, TRACE SAND TRACE GRAVEL, SL. MOIST, WOOD CHIP 2", 21.5'-LOOSE, BLACK (2.5Y, 2/) SANDY SILT, TRACE GRAVEL SL. MOIST, 22.0-LOOSE, BLACK (2.5Y, 2/) SILT, TRACE SAND TRACE GRAVEL, MOIST.	ML ML ML	N/A	PID=0 ppm α=50-100 ppm βΓ=0 cpm
22.5 24.0	067106	06/16/91 10:30	3 3 3	18		LOOSE, BLACK (2.5Y, 2/) SILT, SOME GRAVEL, TRACE SAND, SL. MOIST, 23.8-LOOSE, BLACK TO YELLOWISH BROWN (2.5Y, 2/) TO (10YR, 5/4) SANDY SILT, TRACE GRAVEL, SL. MOIST.	ML ML	N/A	PID=0 ppm α=50-100 ppm βΓ=0 cpm
24.0 25.5	067107	06/16/91 13:30	5 5 4	18		LOOSE, BLACK (2.5Y, 2/) SILT, SOME POORLY SORTED SAND, SL. MOIST.	ML	N/A	PID=0 ppm α=50-100 ppm βΓ=0 cpm
25.5 27.0	067108	06/16/91 13:35	3 3 2	18		LOOSE, BLACK (2.5Y, 2/) SILT, SOME POORLY SORTED SAND, SL. MOIST.	ML	N/A	PID=0 ppm α=50-100 ppm βΓ=0 cpm
27.0 28.5	067109	06/16/91 13:40	2 2 4	18		LOOSE, BLACK (2.5Y, 2/) SILT, SOME POORLY SORTED SAND, SL. MOIST, 28.2-LOOSE, DARK GRAYISH BROWN (10YR, 4/) POORLY SORTED SAND, TRACE GRAVEL, SL. MOIST.	ML SP	N/A	PID=0 ppm α=50-100 ppm βΓ=0 cpm
28.5 30.0	067110	06/16/91 13:45	8 8 6	16		28.2-LOOSE DARK GRAYISH BROWN (10YR, 4/) POORLY SORTED SAND, TRACE GRAVEL, SL. MOIST, MED DENSE, 29.0-MEDIUM DENSE, VERY DARK GRAY (2.5Y, 3/) SANDY SILT, MOIST, 29.5-MEDIUM DENSE (2.5Y, 4/2) OLIVE BROWN, SILT SOME SAND SOME CLAY, SLIGHT PLASTICITY,	SP ML ML	N/A	PID=0 ppm α=50-100 ppm βΓ=0 cpm
30.0 31.5	067111	06/16/91 14:15	8 11 13	18		MEDIUM DENSE, BLACK (5Y/25/1) SILT SOME LIGHT OLIVE BROWN (2.5Y, 5/6) SAND (FINE) MOIST. 31.0-MEDIUM DENSE, DARK OLIVE GRAY TO BLACK (5Y, 3/2 TO 5Y/2.5/2) SILT TRACE SAND, MOIST.	ML ML	N/A	PID=0 ppm α=50-100 ppm βΓ=0 cpm
31.5 33.0	067112	06/16/91 14:20	8 14 20	18		DENSE, DARK OLIVE GRAY, (5Y/3/2) SILT SOME CLAY, LOW PLASTICITY, MOIST.	ML	N/A	PID=0 ppm α=50-100 ppm βΓ=0 cpm

NOTES:

SAA = Same as Above
PID = Photoionization Detector
N/A = Not Applicable

0342

PROJECT NUMBER: 602 3.7	PROJECT NAME: CRU2 PHASE I FIELD INVESTIGATION	
BORING NUMBER: 1709	COORDINATES: NORTH 477814.23 EAST 1378969.43	DATE:04-JUN-91
GROUND ELEVATION: 571	GWL: Depth Date/Time	DATE STARTED: 04-JUN-91
ENGINEER/GEOLOGIST: J. LEAR	Depth Date/Time	DATE COMPLETE: 12-JUN-91
DRILLING METHOD: AUGER		

DEPTH	SAMPLE	DATE TIME	BLOWS ON SAMPLE	RECOVERY	INCHES		USCS SYMBOL	TSF	REMARKS
1.5	067059	06/04/91 15:15	4 10 15	14		MEDIUM DENSE, DARK BROWN (10YR, 3/3) CLAYEY SILT, TRACE SAND, SOME ORGANICS, SL. MOIST. -.5' MEDIUM DENSE, YELLOWISH BROWN, (10YR, 5/3) CLAYEY SILT, TRACE SAND, TRACE GRAVEL, DRY.	ML ML	N/A	PID=0 ppm α=50-100 ppm βΓ=0 cpm
1.5 3.0	067060	06/04/91 15:25	14 15 18	0		NO RECOVERY	N/A	N/A	PID=0 ppm α=50-100 ppm
3.0 4.5	067061	06/04/91 15:25	13 16 18	12		V. STIFF YELLOWISH BROWN TO DARK BROWN (10YR, 5/8 TO 3/3) SILTY CLAY, SOME GRAVEL, TRACE SAND, LOW PLASTICITY, DRY. *ONE BRICK COBBLE WAS RECOVERED.	CL	3.5	PID=0 ppm α=50-100 ppm βΓ=0 cpm
4.5 6.0	067062	06/04/91 15:35	14 25 17	4		DENSE, BLACK, (2.5Y, 2/) SILT, TRACE GRAVEL, DRY	ML	N/A	PID=0 ppm α=110 ppm βΓ=0 cpm
6.0 7.5	067063	06/06/91 09:00	3 13 7	8		MEDIUM DENSE, BLACK (2.5Y, 2/) SILT, TRACE GRAVEL, DRY.	ML	N/A	PID=0 ppm α=50-100 ppm βΓ=0 cpm
7.5 9.0	067064	06/06/91 09:05	7 7 7	18		MEDIUM DENSE, VERY DARK GRAY (10YR, 3/) SILT, SOME GRAVEL, DRY. -8.25'- MEDIUM DENSE, BLACK (2.5Y, 2/) SILTY, TRACE GRAVEL, DRY.	ML ML	N/A	PID=0 ppm α=80-100 ppm βΓ=0 cpm
9.0 10.5	067066	06/06/91 09:10	4 6 6	18		MEDIUM DENSE, VERY DARK GRAY (10YR, 3/) SILT, SOME GRAVEL, DRY. 8.25' MEDIUM DENSE, BLACK (2.5Y, 2/) SILT, TRACE GRAVEL, DRY.	ML	N/A	PID=0 ppm α=50-100 ppm βΓ=0 cpm
9.0 10.5	067065	06/06/91 00:00	4 6 6	18		MEDIUM DENSE, VERY DARK GRAY (10YR, 3/) SILT, SOME GRAVEL, DRY. -8.25'- MEDIUM DENSE, BLACK (2.5Y, 2/) SILTY, TRACE GRAVEL, DRY.	ML	N/A	PID=0 ppm α=50-100 ppm βΓ=0 cpm
10.5 12.0	067067	06/06/91 10:00	1 2 3	18		MEDIUM DENSE, VERY DARK GRAY (10YR, 3/) SILT, SOME GRAVEL, DRY. -8.25'- MEDIUM DENSE, BLACK (2.5Y, 2/) SILT, TRACE GRAVEL, TRACE SAND, SLIGHTLY MOIST.	ML	N/A	PID=0 ppm α=50-100 ppm βΓ=0 cpm
12.0 13.5	067070	06/06/91 10:05	2 3 3	18		LOOSE, BLACK (2.5Y, 2/) SILT, SOME GRAVEL IGNETS, TRACE SAND, SL. MOIST.	ML	N/A	PID=0 ppm α=50-100 ppm βΓ=0 cpm
13.5 15.0	067071	06/06/91 10:10	2 3 3	18		LOOSE, BLACK (2.5Y, 2/) SILT, SOME GRAVEL IGNETS, TRACE SAND, SL. MOIST.	ML	N/A	PID=0 ppm α=50-100 ppm βΓ=0 cpm
15.0 16.5	067072	06/06/91 10:15	4 3 5	18		LOOSE, BLACK (2.5Y, 2/) SILT, SOME GRAVEL IGNETS, TRACE SAND, SL. MOIST.	ML	N/A	PID=0 ppm α=50-100 ppm βΓ=0 cpm
16.5 18.0	067073	06/06/91 11:00	1 2 2	18		LOOSE, BLACK (2.5Y, 2/) SILT, SOME GRAVEL IGNETS, TRACE SAND, VERY LOOSE, SL. MOIST.	ML	N/A	PID=0 ppm α=50-100 ppm βΓ=0 cpm

NOTES:

SAA = Same as Above
PID = Photoionization Detector
N/A = Not Applicable

0343

PROJECT NUMBER: 602 3.7	PROJECT NAME: CRU2 PHASE I FIELD INVESTIGATION	
BORING NUMBER: 1709	COORDINATES: NORTH 477814.23 EAST 1378969.43	DATE:04-JUN-91
GROUND ELEVATION: 571	GWL: Depth Date/Time	DATE STARTED: 04-JUN-91
ENGINEER/GEOLOGIST: J. LEAR	Depth Date/Time	DATE COMPLETE: 12-JUN-91
DRILLING METHOD: AUGER		

DEPTH	SAMPLE	DATE TIME	BLOWS ON SAMPLE	RECOVERY INCHES		USCS SYMBOL	TSF	REMARKS
18.0 19.5	067074	06/06/91 11:05	2 3 4	18	LOOSE, BLACK (2.5Y, 2/) SILT, SOME GRAVEL IGNETS, TRACE SAND, SL. MOIST.	ML	N/A	PID=0 ppm α=50-100 ppm βΓ=0 cpm
19.5 21.0	067075	06/06/91 11:05	2 3 3	18	LOOSE, BLACK (2.5Y, 2/) SILT, SOME GRAVEL IGNETS, TRACE SAND, SL. MOIST.	ML	N/A	PID=0 ppm α=50-100 ppm βΓ=0 cpm
21.0 22.5	067076	06/06/91 11:10	3 3 3	18	LOOSE, BLACK (2.5Y, 2/) SILT, TRACE GRAVEL, SOME GRAVEL IGNETS, TRACE SAND, SL. MOIST	ML	N/A	PID=0 ppm α=50-100 ppm βΓ=0 cpm
22.5 24.0	067077	06/11/91 13:30	2 3 4	18	LOOSE, BLACK (2.5Y, 2/) SILT, TRACE GRAVEL, SOME GRAVEL IGNETS, TRACE SAND, SL. MOIST	ML	N/A	PID=0 ppm α=50-100 ppm βΓ=0 cpm
24.0 25.5	067078	06/11/91 13:40	2 2 4	18	LOOSE, BLACK (2.5Y, 2/) SILT, TRACE GRAVEL, SOME GRAVEL IGNETS, SOME SAND, SL. MOIST.	ML	N/A	PID=0 ppm α=50-100 ppm βΓ=0 cpm
25.5 27.0	067079	06/11/91 13:45	3 3 3	18	LOOSE, BLACK (2.5Y, 2/) SILT, TRACE GRAVEL, SOME GRAVEL IGNETS, SOME SAND, SL. MOIST.	ML	N/A	PID=0 ppm α=50-100 ppm βΓ=0 cpm
27.0 28.5	067080	06/11/91 13:50	3 4 3	16	LOOSE, BLACK (2.5Y, 2/) SILT, TRACE GRAVEL, SOME GRAVEL IGNETS, SOME SAND, SL. MOIST. 27.4 LOOSE, VERY DARK GRAY (2.5Y, 3/) SILT, SOME SAND, TRACE GRAVEL, MOIST.	ML ML	N/A	PID=0 ppm α=50-100 ppm βΓ=0 cpm
28.5 30.0	067081	06/11/91 15:00	1 2 2	14	LOOSE, BLACK (2.5Y, 2/) SILT, TRACE GRAVEL, SOME GRAVEL IGNETS, SOME SAND, SL. MOIST. 27.4 VERY LOOSE, VERY DARK GRAY (2.5Y, 3/) SILT, SOME SAND, TRACE GRAVEL, MOIST TO V. MOIST.	ML	N/A	PID=0 ppm α=50-100 ppm βΓ=0 cpm
30.0 31.5	067082	06/11/91 15:05	1 5 7	18	LOOSE, BLACK (2.5Y, 2/) SILT, TRACE SAND, TRACE GRAVEL, V. MOIST. 30.5' STIFF, DARK GRAYISH BROWN, (2.5Y, 4/2) CLAYEY SILT, V. MOIST.	ML ML	N/A 1.2	PID=0 ppm α=100-150 ppm βΓ=0 cpm
31.5 33.0	067083	06/11/91 15:10	8 12 19	18	LOOSE, BLACK (2.5Y, 2/) SILT, TRACE SAND, TRACE GRAVEL, V. MOIST. 30.5' STIFF, DARK GRAYISH BROWN, (2.5Y, 4/2) CLAYEY SILT, V. MOIST.	ML	1.5	PID=0 ppm α=80-120 ppm βΓ=0 cpm

NOTES:

SAA = Same as Above
PID = Photoionization Detector
N/A = Not Applicable

0344

PROJECT NUMBER: 602 3.7	PROJECT NAME: CRU2 PHASE I FIELD INVESTIGATION	
BORING NUMBER: 1710	COORDINATES: NORTH 477931.49 EAST 1378993.33	DATE:31-MAY-91
GROUND ELEVATION: 577.4	GWL: Depth Date/Time	DATE STARTED: 31-MAY-91
ENGINEER/GEOLOGIST: J. LEAR	Depth Date/Time	DATE COMPLETE: 04-JUN-91
DRILLING METHOD: AUGER		

DEPTH	SAMPLE	DATE TIME	BLOWS ON SAMPLE	RECOVERY INCHES		USCS SYMBOL	TSF	REMARKS
1.5	067026	05/31/91 13:30	4 10 12	18	MEDIUM DENSE, DARK BROWN (10YR, 3/3) CLAYEY SILT, SOME ORGANICS, SOME GRAVEL, LOW PLASTICITY, SL. MOIST. MEDIUM DENSE, BROWN (10YR, 4/3) CLAYEY SILT, TRACE GRAVEL, SL. MOIST.	ML ML	N/A	PID=0 ppm α=50-100 ppm βΓ=0 cpm
1.5 3.0	067027	05/31/91 13:40	8 9 10	18	MEDIUM DENSE, BLACK (2.5Y, 2/) SANDY SILT, TRACE GRAVEL, DRY.	ML	N/A	PID=0 ppm α=50-100 ppm βΓ=0 cpm
3.0 4.5	067028	05/31/91 13:50	7 10 10	18	MEDIUM DENSE, BLACK (2.5Y, 2/) SANDY SILT, TRACE GRAVEL, DRY.	ML	N/A	PID=0 ppm α=50-100 ppm βΓ=0 cpm
4.5 5.0	067029	05/31/91 14:00	7 8 8	18	MEDIUM DENSE, BLACK (2.5Y, 2/) SANDY SILT, TRACE GRAVEL, DRY. 5.5' MEDIUM DENSE, VERY DARK GRAY (2.5Y, 3/1) SANDY SILT, TRACE GRAVEL, DRY.	ML ML	N/A	PID=0 ppm α=50-100 ppm βΓ=0 cpm
6.0 7.5	067030	05/31/91 14:35	1 3 3	12	LOOSE, BLACK (2.5Y, 2/) SILT, SOME SAND, TRACE GRAVEL, DRY.	ML	N/A	PID=0 ppm α=50-100 ppm βΓ=0 cpm
7.5 9.0	067031	05/31/91 14:40	2 3 3	16	LOOSE, BLACK (2.5Y, 2/) SILT, SOME SAND, TRACE GRAVEL, DRY.	ML	N/A	PID=0 ppm α=50-100 ppm βΓ=0 cpm
9.0 10.5	067032	05/31/91 14:45	2 2 2	18	LOOSE, BLACK (2.5Y, 2/) SILT, SOME SAND, TRACE GRAVEL, DRY.	ML	N/A	PID=0 ppm α=50-100 ppm βΓ=0 cpm
10.5 12.0	067033	05/31/91 14:50	2 3 3	0	NO RECOVERY	N/A	N/A	PID=0 ppm α=50-100 ppm βΓ=0 cpm
12.0 13.5	067034	05/31/91 15:30	1 1 2	18	LOOSE, BLACK (2.5Y, 2/) SILT, SOME SAND, TRACE GRAVEL, SL. MOIST.	ML	N/A	PID=0 ppm α=50-100 ppm βΓ=0 cpm
13.5 15.0	067035	05/31/91 15:35	1 2 2	18	LOOSE, BLACK (2.5Y, 2/) SILT, SOME SAND, TRACE GRAVEL, SL. MOIST.	ML	N/A	PID=0 ppm α=50-100 ppm βΓ=0 cpm
15.0 16.5	067036	05/31/91 15:40	1 1 2	6	LOOSE, BLACK (2.5Y, 2/) SILT, SOME SAND, TRACE GRAVEL, SL. MOIST.	ML	N/A	PID=0 ppm α=50-100 ppm βΓ=0 cpm
16.5 18.0	067039	06/01/91 09:00	2 3 3	18	LOOSE, BLACK (2.5Y, 2/) SILT, TRACE SAND, DRY. 16.9' LOOSE, BLACK (2.5Y, 2/) SILT, SOME SAND, TRACE GRAVEL, DRY.	ML ML	N/A	PID=0 ppm α=50-100 ppm βΓ=0 cpm
18.0 19.5	067040	06/01/91 09:05	4 4 5	18	LOOSE, BLACK (2.5Y, 2/) SILT, TRACE SAND, DRY. 16.9' LOOSE, BLACK (2.5Y, 2/) SILT, SOME SAND, TRACE GRAVEL, DRY.	ML	N/A	PID=0 ppm α=50-100 ppm βΓ=0 cpm

NOTES:

SAA = Same as Above
PID = Photoionization Detector
N/A = Not Applicable

PROJECT NUMBER: 602 3.7	PROJECT NAME: CRU2 PHASE I FIELD INVESTIGATION	
BORING NUMBER: 1710	COORDINATES: NORTH 477931.49 EAST 1378993.33	DATE:31-MAY-91
GROUND ELEVATION: 577.4	GWL: Depth Date/Time	DATE STARTED: 31-MAY-91
ENGINEER/GEOLOGIST: J. LEAR	Depth Date/Time	DATE COMPLETE: 04-JUN-91
DRILLING METHOD: AUGER		

DEPTH	SAMPLE DATE TIME	BLOWS ON SAMPLE	RECOVERY INCHES		USCS SYMBOL	TSF	REMARKS
19.5 21.0	067041 06/01/91 09:15	4 18 50/3"	8	VERY DENSE, (2.5Y, 2/) BLACK, SILT, TRACE SAND, SOME GRAVEL IGNETS, DRY.	ML	N/A	PID=0 ppm α=50-100 ppm βΓ=0 cpm
21.0 22.5	067042 06/01/91 09:50	38 42 27	0	NO RECOVERY	N/A	N/A	PID=0 ppm α=50-100 ppm βΓ=0 cpm
22.5 23.0	067043 06/01/91 10:00	45	6	VERY DENSE, BLACK (2.5Y, 2/) SILT, SOME YELLOWISH RED, (5YR, 5/6) STONE IGNETS, TRACE SAND, DRY. 23.0' INPENETRABLE STRUCK, ATTEMPT TO AUGER THRU	ML	N/A	PID=0 ppm α=200-240 ppm βΓ=0-2 cpm
24.0 25.5	067044 06/01/91 13:20	40 18 32	3	DENSE, BLACK (2.5Y, 2/) SILT, CONCRETE RUBBLE COBBLES, TRACE SAND, TRACE GRAVELS, DRY.	ML	N/A	PID=0-4 ppm α=100-150 ppm βΓ=0 cpm
25.5 27.0	067045 06/01/91 13:45	32 30 18	8	DENSE, BLACK (2.5Y, 2/) SILT, SOME ORGANICS, SOME CONCRETE GRAVEL, TRACE SAND, SL. MOIST.	ML	N/A	PID=2 ppm α=100-400 ppm βΓ=0 cpm
27.0 28.5	067046 06/01/91 14:10	33 25 14	16	DENSE, DARK OLIVE GRAY (5Y, 3/2) GRAVELY SAND, TRACE SILT, WET. 27.5' DENSE, YELLOWISH BROWN (10YR, 5/4) CLAYEY SILT, SOME GRAVEL & COBBLES, MOIST.	GW ML	N/A	PID=0 ppm α=100-800 ppm βΓ=0-2 cpm
28.5 30.0	067047 06/01/91 15:15	20 25 28	14	SOFT, DARK OLIVE GRAY (5Y, 3/2) CLAY, TRACE SILT, MED PLAST, MOIST. VERY DENSE, YELLOWISH BROWN (10YR, 5/8) WELL SORTED COARSE SAND, TRACE GRAVEL, DRY.	CL SP	0.6	PID=<1.0 ppm α=40-180 ppm βΓ=0 cpm
30.0 31.5	067049 06/01/91 15:30	20 30 32	18	SOFT, DARK OLIVE GRAY (5Y, 3/2) CLAY, TRACE SILT, MED PLAST, MOIST. VERY DENSE, YELLOWISH BROWN (10YR, 5/8) WELL SORTED COARSE SAND, TRACE GRAVEL, DRY.	SP	N/A	PID=0 ppm α=50-180 ppm βΓ=0 cpm

NOTES:

SAA = Same as Above
PID = Photoionization Detector
N/A = Not Applicable

PROJECT NUMBER: 602 3.7	PROJECT NAME: CRU2 PHASE I FIELD INVESTIGATION	
BORING NUMBER: 1711	COORDINATES: NORTH 478126.52 EAST 1378968.88	DATE:23-MAY-91
GROUND ELEVATION: 576.5	GWL: Depth Date/Time	DATE STARTED: 23-MAY-91
ENGINEER/GEOLOGIST: J. LEAR	Depth Date/Time	DATE COMPLETE: 30-MAY-91
DRILLING METHOD: AUGER		

DEPTH	SAMPLE DATE TIME	BLOWS ON SAMPLE	RECOVERY INCHES		USCS SYMBOL	TSF	REMARKS
1.5	067009 05/23/91 09:43	2 13 13	18	MEDIUM DENSE, (2.5Y, 2/) BLACK SILTY ASH SOME GRAVEL IGNETS, DRY, .75-VERY STIFF DARK GRAYISH BROWN, (2.5Y, 4/2) CLAYEY SILT TRACE GRAVEL, DRY.	ML ML	N/A 2.5	PID=0 ppm α=70-100 ppm βΓ=0 cpm
3.0	067010 05/23/91 09:48	9 12 11	18	MEDIUM DENSE, BLACK (2.5Y, 2/) SILTY SAND SOME FINE GRAVEL, DRY.	SM	N/A	PID=0 ppm α=70-100 ppm βΓ=0 cpm
4.5	067011 05/23/91 09:53	10 13 9	18	MEDIUM DENSE, BLACK (2.5Y, 2/) SILTY SAND SOME FINE GRAVEL, DRY.	SM	N/A	PID=0 ppm α=70-100 ppm βΓ=0 cpm
6.0	067012 05/29/91 10:53	6 8 9	18	MEDIUM DENSE, BLACK (2.5Y, 2/) SILTY SAND SOME FINE GRAVEL, DRY.	SM	N/A	PID=0 ppm α=70-100 ppm βΓ=0 cpm
7.5	067013 05/29/91 11:15	5 4 3	16	LOOSE, BLACK (2.5Y, 2/) SILT, SOME SAND, TRACE GRAVEL, DRY.	ML	N/A	PID=0 ppm α=70-100 ppm βΓ=0 cpm
9.0	067014 05/29/91 11:20	4 5 5	18	LOOSE, BLACK (2.5Y, 2/) SILTY SAND TRACE FINE GRAVEL, DRY, 8.5-LOOSE, BLACK (2.5Y, 2/) SILT, SOME SAND, TRACE GRAVEL, DRY.	SM ML	N/A	PID=0 ppm α=70-100 ppm βΓ=0 cpm
10.5	067015 05/29/91 12:50	3 4 4	18	LOOSE, BLACK (2.5Y, 2/) SILTY SAND TRACE FINE GRAVEL, DRY, 8.5-LOOSE, BLACK (2.5Y, 2/) SILT, SOME SAND, TRACE GRAVEL, DRY.	ML	N/A	PID=0 ppm α=70-100 ppm βΓ=0 cpm
12.0	067016 05/29/91 13:05	4 4 4	18	LOOSE, BLACK (2.5Y, 2/) SANDY SILT, SOME FINE GRAVEL, SL. MOIST TO DRY.	ML	N/A	PID=0 ppm α=70-100 ppm βΓ=0 cpm
13.5	067018 05/29/91 13:35	2 3 3	18 -	LOOSE, BLACK (2.5Y, 2/) SANDY SILT, SOME FINE GRAVEL, SL. MOIST TO DRY, 12.75-LOOSE, BLACK (2.5Y, 2/) SILTY SAND SOME FINE GRAVEL, MOIST TO WET.	ML SM	N/A	PID=0 ppm α=70-100 ppm βΓ=0 cpm
15.0	067019 05/29/91 13:40	2 2 3	4	LOOSE, LIGHT OLIVE BROWN, (2.5Y, 5/2) CLAYEY SILT, TRACE SAND, WET.	ML	N/A	PID=0 ppm α=70-100 ppm βΓ=0 cpm
19.5	067020 05/29/91 13:45	0 2 3	18	SOFT, DARK GRAYISH BROWN (2.5Y, 5/2) CLAY TRACE MED GRAVEL, MED TO HIGH PLASTICITY WET.	CL	0.25	PID=0 ppm α=200-300 ppm βΓ=0 cpm

NOTES:

SAA = Same as Above
PID = Photoionization Detector
N/A = Not Applicable

PROJECT NUMBER: 602 3.7	PROJECT NAME: CRU2 PHASE I FIELD INVESTIGATION	
BORING NUMBER: 1791	COORDINATES: NORTH 477812.99 EAST 1378970.18	DATE:25-JUN-91
GROUND ELEVATION: 571.1	GWL: Depth Date/Time	DATE STARTED: 25-JUN-91
ENGINEER/GEOLOGIST: J. LEAR	Depth Date/Time	DATE COMPLETE: 26-JUN-91
DRILLING METHOD: AUGER		

DEPTH	SAMPLE	DATE TIME	BLOWS ON SAMPLE	RECOVERY INCHES		USCS SYMBOL	TSF	REMARKS
27.0 28.5	067121 06/25/91 14:00		8 16 19	18	STIFF, DARK GRAYISH BROWN, (2.5Y, 4/2) CLAYEY SILT, V. MOIST.	ML	1.5	PID=0 ppm α=150-200 ppm βΓ=0 cpm
28.5 30.0	067122 06/25/91 14:10		13 12 17	18	STIFF, DARK GRAYISH BROWN, (2.5Y, 4/2) CLAYEY SILT, V. MOIST.	ML	1.5	PID=0 ppm α=50-100 ppm βΓ=0 cpm

NOTES:

SAA = Same as Above
PID = Photoionization Detector
N/A = Not Applicable

PROJECT NUMBER: 602 3.7	PROJECT NAME: CRU2 PHASE I FIELD INVESTIGATION	
BORING NUMBER: 1849	COORDINATES: NORTH 477806.91 EAST 1378975.19	DATE:22-FEB-92
GROUND ELEVATION: 571.1	GWL: Depth Date/Time	DATE STARTED: 22-FEB-92
ENGINEER/GEOLOGIST: D. O'BRIEN	Depth Date/Time	DATE COMPLETE: 22-FEB-92
DRILLING METHOD: AUGER		

DEPTH	SAMPLE	DATE TIME	BLOWS ON	SAMPLE	RECOVERY	INCHES		USCS SYMBOL	TSF	REMARKS
1.5	067601	02/22/92 09:00	3 4 8		12		MEDIUM STIFF, 10YR (5/3) BROWN, SILTY CLAY W/ SAND NO PLASTICITY, SLIGHTLY MOIST.	CL	.75	PID=0 ppm α=40 ppm βΓ=10 cpm
3.0	067602	02/22/92 09:15	10 13 22		15		HARD, 10TR (5/4) YELLOWISH BROWN, SILTY CLAY, NO PLASTICITY, SLIGHTLY MOIST.	CL	>4.0	PID=3 ppm α=80 ppm βΓ=0 cpm
4.5	067603	02/22/92 09:45	10 14 9		9		STIFF, 10YR (5/4) YELLOWISH BROWN, SILTY CLAY WOTH LARGE COBBLES, NO PLASTICITY, SLIGHTLY MOIST.	CL	1.5	PID=0 ppm α=60 ppm βΓ=10 cpm
7.5	067604	02/22/92 10:10	13 10 5		12		MEDIUM DENSE, BLACK SILT, SOME GRAVEL, DRY. (POSSIBLE FLY ASH).	ML	N/A	PID=0 ppm βΓ=60 cpm
9.0	067605	02/22/92 10:30	6 5 4		15		LOOSE BLACK SILT, DRY (POSSIBLE FLY ASH).	ML	N/A	PID=0 ppm βΓ=50 cpm
10.5	067606	02/22/92 10:35	4 4 3		15		LOOSE BLACK SILT, DRY (POSSIBLE FLY ASH).	ML	N/A	PID=0 ppm βΓ=40 cpm
12.0	067607	02/22/92 10:40	3 3 3		12		LOOSE BLACK SILT, DRY (POSSIBLE FLY ASH).	ML	N/A	PID=0 ppm βΓ=40 cpm
13.5	067608	02/22/92 10:45	5 3 2		13		LOOSE BLACK SILT, DRY (POSSIBLE FLY ASH)	ML	N/A	PID=0 ppm βΓ=40 cpm
15.0	067609	02/22/92 10:50	2 2 2		18		LOOSE BLACK SILT, DRY (POSSIBLE FLY ASH)	ML	N/A	PID=0 ppm βΓ=40 cpm
16.5	067610	02/22/92 10:55	3 5 2		18		LOOSE BLACK SILT, DRY (POSSIBLE FLY ASH)	ML	N/A	PID=0 ppm βΓ=50 cpm
18.0	067611	02/22/92 11:00	2 2 2		18		LOOSE BLACK SILT, DRY (POSSIBLE FLY ASH)	ML	N/A	PID=0 ppm βΓ=40 cpm
19.5	067612	02/22/92 11:05	2 2 2		18		LOOSE, BLACK SILT, DRY (POSSIBLE FLY ASH)	ML	N/A	PID=0 ppm βΓ=40 cpm
21.0	067613	02/22/92 11:10	2 3 2		18		LOOSE, BLACK SILT, DRY (POSSIBLE FLY ASH)	ML	N/A	PID=0 ppm βΓ=50 cpm

NOTES:

SAA = Same as Above
PID = Photoionization Detector
N/A = Not Applicable

0349

PROJECT NUMBER: 602 3.7	PROJECT NAME: CRU2 PHASE I FIELD INVESTIGATION	
BORING NUMBER: 1849	COORDINATES: NORTH 477806.91 EAST 1378975.19	DATE:22-FEB-92
GROUND ELEVATION: 571.1	GWL: Depth Date/Time	DATE STARTED: 22-FEB-92
ENGINEER/GEOLOGIST: D. O'BRIEN	Depth Date/Time	DATE COMPLETE: 22-FEB-92
DRILLING METHOD: AUGER		

DEPTH	SAMPLE	DATE TIME	BLOWS ON SAMPLE	RECOVERY INCHES		USCS SYMBOL	TSF	REMARKS
21.0 22.5	067614	02/22/92 13:10	3 3 3	18	LOOSE, BLACK SILT, DRY (POSSIBLE FLY ASH)	ML	N/A	PID=0 ppm βΓ=40 cpm
22.5 24.0	067615	02/22/92 13:15	2 2 3	18	LOOSE, BLACK SILT, DRY (POSSIBLE FLY ASH)	ML	N/A	PID=0 ppm βΓ=60 cpm
24.0 25.5	067638	02/22/92 13:20	3 3 4	18	LOOSE, BLACK SILT, DRY (POSSIBLE FLY ASH)	ML	N/A	PID=0 ppm βΓ=60 cpm
25.5 27.0	067616	02/22/92 13:25	2 2 3	18	LOOSE, BLACK SILT, DRY (POSSIBLE FLY ASH)	ML	N/A	PID=0 ppm βΓ=40 cpm
27.0 28.5	067617	02/22/92 13:30	2 2 3	18	LOOSE, BLACK SILT, DRY (POSSIBLE FLY ASH)	ML	N/A	PID=0 ppm βΓ=60 cpm
28.5 30.0	067618	02/22/92 13:35	5 7 9	18	MED. STIFF 2.5Y, 5/2 GRAYISH BROWN SILTY CLAY W/ SMALL AMOUNT OF SAND, NO PLASTICITY, MOIST.	CL	.75	PID=0 ppm βΓ=60 cpm
30.0 31.5	067619	02/22/92 13:40	10 9 10	18	STIFF 2.5Y (5/2) GRAYISH BROWN SILTY CLAY, NO PLASTICITY, MOIST.	CL	1.0	PID=0 ppm βΓ=50 cpm
31.5 33.0	067620	02/22/92 13:45	12 7 9	18	STIFF 2.5 (4/3) OLIVE BROWN SILTY CLAY WITH GRAVEL, NO PLASTICITY, MOIST.	CL	1.0	PID=0 ppm βΓ=60 cpm

NOTES:

SAA = Same as Above
PID = Photoionization Detector
N/A = Not Applicable

0350

PROJECT NUMBER: 602 3.7	PROJECT NAME: CRU2 PHASE I FIELD INVESTIGATION	
BORING NUMBER: 1850	COORDINATES: NORTH 478126.20 EAST 1378962.62	DATE:23-FEB-92
GROUND ELEVATION: 576.7	GWL: Depth Date/Time	DATE STARTED: 23-FEB-92
ENGINEER/GEOLOGIST: D. O'BRIEN	Depth Date/Time	DATE COMPLETE: 23-FEB-92
DRILLING METHOD: AUGER		

DEPTH	SAMPLE	DATE TIME	BLOWS ON SAMPLE	RECOVERY INCHES		USCS SYMBOL	TSF	REMARKS
1.5	067623	02/23/92 08:55	5 8 9	12	VERY STIFF 10YR (6/6) BROWISH YELLOW SILTY CLAY, NO PLASTICITY, SLIGHTLY MOIST. LOOSE BLACK SILT, DRY (FLY ASH) 1.5 FT.	CL ML	3.5	PID=0 ppm βΓ=60 cpm
1.5 3.0	067624	02/23/92 09:00	6 6 6	18	MEDIUM DENSE BLACK SILT, DRY (FLY ASH) 3.0 FT.	ML	N/A	PID=0 ppm βΓ=50 cpm
3.0 4.5	067625	02/23/92 09:05	6 6 8	15	MEDIUM DENSE BLACK SILT, DRY (FLY ASH) 4.5 FT.	ML	N/A	PID=0 ppm βΓ=40 cpm
4.5 6.0	067626	02/23/92 09:10	9 8 10	15	MEDIUM DENSE BLACK SILT, DRY (FLY ASH) 6.0 FT.	ML	N/A	PID=0 ppm βΓ=60 cpm
6.0 7.5	067627	02/23/92 09:15	7 7 9	18	MEDIUM DENSE BLACK SILT, DRY (FLY ASH) 7.5 FT.	ML	N/A	PID=0 ppm βΓ=60 cpm
7.5 9.0	067628	02/23/92 09:20	4 6 8	15	MEDIUM DENSE BLACK SILT, DRY (FLY ASH) 9.0 FT.	ML	N/A	PID=0 ppm βΓ=40 cpm
9.0 10.5	067629	02/23/92 09:22	6 7 10	18	MEDIUM DENSE BLACK SILT, DRY (FLY ASH) 10.5 FT.	ML	N/A	PID=0 ppm βΓ=50 cpm
10.5 12.0	067630	02/23/92 09:25	8 9 8	18	MEDIUM DENSE BLACK SILT, DRY (FLY ASH) 12.0 FT.	ML	N/A	PID=0 ppm βΓ=50 cpm
12.0 13.5	067631	02/23/92 09:30	8 8 8	18	MEDIUM DENSE BLACK SILT, DRY (FLY ASH) 13.5 FT.	ML	N/A	PID=0 ppm βΓ=60 cpm
13.5 15.0	067632	02/23/92 09:35	7 9 11	18	MEDIUM DENSE BLACK SILT, DRY (FLY ASH) 15.0 FT.	ML	N/A	PID=0 ppm βΓ=60 cpm
15.0 16.5	067633	02/23/92 09:40	9 7 9	7	VERY STIFF 5Y (6/2) LIGHT OLIVE GRAY SILTY CLAY, LOW PLASTICITY, SLIGHTLY MOIST.	CL	2.75	PID=0 ppm βΓ=50 cpm
16.5 18.0	067634	02/23/92 09:45	4 6 8	15	VERY STIFF 5Y (6/2) LIGHT OLIVE GRAY SILTY CLAY, LOW PLASTICITY, SLIGHTLY MOIST 18.0 FT.	CL	2.75	PID=0 ppm βΓ=60 cpm
18.0 19.5	067635	02/23/92 09:50	6 7 11	15	MED. STIFF 5Y (6/2) LIGHT OLIVE GRAY SILTY CLAY, LOW PLASTICITY, SLIGHTLY MOIST 19.5 FT.	CL	.75	PID=0 ppm βΓ=60 cpm

NOTES:

SAA = Same as Above
PID = Photoionization Detector
N/A = Not Applicable

PROJECT NUMBER: 20.03.05	PROJECT NAME: CRU2 RI PHASE II FIELD INVESTIGATION	
BORING NUMBER: 1994	COORDINATES: NORTH 477742.39 EAST 1379200.09	DATE:12-MAY-93
GROUND ELEVATION: 570.3	GWL: Depth Date/Time	DATE STARTED: 12-MAY-93
ENGINEER/GEOLOGIST: J BOYER	Depth Date/Time	DATE COMPLETE: 13-MAY-93
DRILLING METHOD: HOLLOW STEM AUGER		

DEPTH	SAMPLE	DATE TIME	BLOWS ON SAMPLE	RECOVERY INCHES		USCS SYMBOL	TSF	REMARKS
1.5 2.0	116262 116263 05/12/93 09:00	8	6	(10YR, 2/1) BLACK FLYASH, SLIGHTLY MOIST		N/A	N/A	PID=1.0 ppm βΓ=60 cpm
3.5 4.0	116265 116266 05/12/93 09:15	22	6	SAA		N/A	N/A	PID=1.0 ppm βΓ=120 cpm
5.5 6.0	116268 116269 05/12/93 10:50	6	4	SAA		N/A	N/A	PID=0 ppm βΓ=80 cpm
7.5 8.0	116271 116272 05/12/93 10:55	6	6	(10YR, 2/1) BLACK, FLYASH, MOIST		N/A	N/A	PID=0 ppm βΓ=60 cpm
8.0 9.5	116273 05/21/93 13:00	3	6	SAA		N/A	N/A	PID=0 ppm βΓ=60 cpm
9.5 10.0	116274 116275 05/21/93 13:00	1	6	SAA		N/A	N/A	PID=0 ppm βΓ=60 cpm
11.5 12.0	116277 116278 05/12/93 13:15	2	6	SAA		N/A	N/A	PID=0 ppm βΓ=80 cpm
13.5 14.0	116280 116281 05/12/93 13:25	2	6	SAA		N/A	N/A	PID=0 ppm βΓ=60 cpm
15.5 16.0	116284 116285 05/13/93 08:50	6	6	SAA		N/A	N/A	PID=2.7 ppm βΓ=80 cpm
17.5 18.0	116287 116288 05/13/93 09:00	6	3	SAA		N/A	N/A	PID=2 ppm βΓ=80 cpm
19.5 20.0	116290 116291 05/13/93 09:35	16	6	SAA		N/A	N/A	PID=0.6 ppm βΓ=80 cpm

NOTES:
28.0 FT TO 30.0 FT SHELBY TUBE HAS ESITMATED RECOVERY

Driller: JOE RAAB, ROGER DAVIS

SAA = Same as Above
PID = Photoionization Detector
N/A = Not Applicable

0352

PROJECT NUMBER: 20.03.05	PROJECT NAME: CRU2 RI PHASE II FIELD INVESTIGATION	
BORING NUMBER: 1994	COORDINATES: NORTH 477742.39 EAST 1379200.09	DATE:12-MAY-93
GROUND ELEVATION: 570.3	GWL: Depth Date/Time	DATE STARTED: 12-MAY-93
ENGINEER/GEOLOGIST: J BOYER	Depth Date/Time	DATE COMPLETE: 13-MAY-93
DRILLING METHOD: HOLLOW STEM AUGER		

DEPTH	SAMPLE	DATE TIME	BLOWS ON	SAMPLE	RECOVERY	INCHES		USCS SYMBOL	TSF	REMARKS
21.5 22.0	116293 116294 05/13/93 09:50		4		6		SAA	N/A	N/A	PID=1.7 ppm βΓ=80 cpm
23.5 24.0	116296 116297 05/13/93 10:00		9		6		SAA	N/A	N/A	PID=1 ppm βΓ=60 cpm
25.5 26.0	116299 116300 05/13/93 10:20		8		6		SAA	SP	N/A	PID=0 ppm βΓ=60 cpm
27.5 28.0	116302 116303 05/13/93 10:30		23		3		SAA	ML	N/A	PID=0 ppm βΓ=110 cpm
28.0 28.5	116304 05/13/93 11:00		N/A		4		UNKNOWN	N/A	N/A	
28.5 29.0	116304 05/13/93 11:00		N/A		4		UNKNOWN	N/A	N/A	
29.0 29.5	116304 05/13/93 11:00		N/A		4		UNKNOWN	N/A	N/A	
29.5 30.0	116304 05/13/93 11:00		N/A		6		(5Y, 5/4) OLIVE, CLAYEY SILT, MOIST, TRACE GRAVEL	ML	N/A	
30.0 30.5	116305 05/13/93 14:00		10		6		VERY STIFF, (10YR, 4/6) DARK YELLOWISH BROWN, SILTY CLAY, LOW PLASTICITY MOIST	CL	2.0	PID=0 ppm βΓ=60 cpm
30.5 31.0	116306 05/13/93 14:00		15		6		VERY STIFF, (10YR, 4/6) DARK YELLOWISH BROWN, SILTY CLAY WITH A 1 INCH LAYER OF FLYASH, LOW PLATICITY, MOIST	CL	4	PID=0 ppm βΓ=60 cpm
31.0 31.5	116307 05/13/93 14:00		17		2		VERY STIFF (10YR, 4/6) DARK YELLOWISH BROWN, SILTY CLAY, LOW PLASTICITY, MOIST	CL	4	PID=0 ppm βΓ=60 cpm
31.5 32.0	05/13/93 14:00		15		0		NO RECOVERY	N/A	N/A	

NOTES:
28.0 FT TO 30.0 FT SHELBY TUBE HAS ESITMATED RECOVERY

Driller: JOE RAAB, ROGER DAVIS

SAA = Same as Above
PID = Photoionization Detector
N/A = Not Applicable

0353

PROJECT NUMBER: 20.03.05	PROJECT NAME: CRU2 RI PHASE II FIELD INVESTIGATION	
BORING NUMBER: 1994	COORDINATES: NORTH 477742.39 EAST 1379200.09	DATE:12-MAY-93
GROUND ELEVATION: 570.3	GWL: Depth Date/Time	DATE STARTED: 12-MAY-93
ENGINEER/GEOLOGIST: J BOYER	Depth Date/Time	DATE COMPLETE: 13-MAY-93
DRILLING METHOD: HOLLOW STEM AUGER		

DEPTH	SAMPLE	DATE TIME	BLOWS ON	SAMPLE	RECOVERY	INCHES		USCS	SYMBOL	TSF	REMARKS
32.0 32.5	116308 116309	05/13/93 14:15	32		6		VERY STIFF (2.5YR, 5/4) LIGHT OLIVE BROWN, SILTY CLAY, LOW PLASTICITY, MOIST	CL		4	PID=0 ppm βΓ=80 cpm
32.5 33.0	116308 116309	05/13/93 14:15	21		6		SAA	CL		4	PID=0 ppm βΓ=80 cpm
33.0 33.5	116308 116309	05/13/93 14:15	26		6		VERY DENSE, (10YR, 3/6) DARK YELLOWISH BROWN, POORLY GRADED SILTY SAND, MOIST	SM		N/A	PID=0 ppm βΓ=80 cpm
33.5 34.0	116308 116309	05/13/93 14:15	31		6		SAA	SM		N/A	PID=0 ppm βΓ=80 cpm
34.0 34.5	116311	05/13/93 14:30	5		6		MEDIUM DENSE, (10YR, 4/6) DARK YELLOWISH BROWN, POORLY GRADED SAND WITH GRAVEL, MOIST	SP		N/A	PID=0 ppm βΓ=60 cpm
34.5 35.0	116311	05/13/93 14:30	4		6		SAA	SP		N/A	PID=0 ppm βΓ=60 cpm
35.0 35.5		05/13/93 14:30	11		0		NO RECOVERY	N/A		N/A	
35.5 36.0		05/13/93 14:30	10		0		NO RECOVERY	N/A		N/A	
36.0 36.5	116312	05/13/93 14:50	9		6		VERY DENSE (2.5Y, 5/4) LIGHT OLIVE BROWN, POORLY GRADED SAND WITH GRAVEL, MOIST	SP		N/A	PID=0 ppm βΓ=60 cpm
36.5 37.0	116312	05/13/93 14:50	9		6		SAA	SP		N/A	PID=0 ppm βΓ=60 cpm
37.0 37.5	116312	05/13/93 14:50	15		6		SAA	SP		N/A	PID=0 ppm βΓ=60 cpm
37.5 38.0	116313 116314	05/13/93 14:50	44		6		VERY DENSE (2.5Y, 5/4) LIGHT OLIVE BROWN, POORLY GRADED SAND, TRACE GRAVEL, MOIST	SP		N/A	

NOTES:
28.0 FT TO 30.0 FT SHELBY TUBE HAS ESITMATED RECOVERY

Driller: JOE RAAB, ROGER DAVIS

SAA = Same as Above
PID = Photoionization Detector
N/A = Not Applicable

0354

PROJECT NUMBER: 20.03.05	PROJECT NAME: CRU2 RI PHASE II FIELD INVESTIGATION	
BORING NUMBER: 1995	COORDINATES: NORTH 477770.18 EAST 1379054.76	DATE:01-MAY-93
GROUND ELEVATION: 567.9	GWL: Depth Date/Time	DATE STARTED: 01-MAY-93
ENGINEER/GEOLOGIST: J BOYER	Depth Date/Time	DATE COMPLETE: 02-MAY-93
DRILLING METHOD: HOLLOW STEM AUGER		

DEPTH	SAMPLE / DATE TIME	BLOWS ON	SAMPLE	RECOVERY	INCHES		USCS SYMBOL	TSF	REMARKS
.5	116077 05/01/93 09:15	4		6		MEDIUM DENSE, (2.5Y, 5/4) LIGHT OLIVE BROWN, CLAYEY SILT WITH GRAVEL TRACE FLYASH	ML	N/A	PID=40-100 ppm βΓ=1.9 cpm
.5 1.0	116077 05/01/93 09:15	9		6		SAA	ML	N/A	PID=1.9 ppm βΓ=40-100 cpm
1.0 1.5	116077 05/01/93 09:15	12		6		SAA	ML	N/A	PID=1.9 ppm βΓ=40-100 cpm
1.5 2.0	116078 116079 05/01/93 09:15	14		3		SAA; AND (10YR, 2/1) BLACK, FLYASH, SLIGHTLY MOIST	ML	N/A	PID=1.9 ppm βΓ=40-100 cpm
2.0 2.5	116080 05/01/93 09:30	9		6		(10YR, 2/1) BLACK, FLYASH, SLIGHTLY MOIST, TRACE SILTY CLAY	N/A	N/A	βΓ=180 cpm
2.5 3.0	116080 05/01/93 09:30	9		6		STIFF, (2.5Y, 5/4) LIGHT OLIVE BROWN, SILTY CLAY WITH GRAVEL, TRACE FLYASH	N/A CL	N/A 1.5	βΓ=120 cpm
3.0 3.5	116080 05/01/93 09:30	11		6		SAA	N/A CL	N/A	βΓ=120 cpm
3.5 4.0	116081 116082 05/01/93 09:30	15		6		(10YR, 2/1) BLACK FLYASH, SLIGHTLY MOIST, TRACE CLAY	N/A	N/A	PID=1.5 ppm βΓ=120 cpm
4.0 4.5	116083 05/01/93 10:00	2		6		LOOSE, (2.5Y, 5/6) LIGHT OLIVE BROWN, CLAYEY SILT WITH GRAVEL, TRACE FLYASH	ML	N/A	PID=0 ppm βΓ=80 cpm
4.5 5.0	116083 05/01/93 10:00	3		6		SAA	ML	N/A	PID=0 ppm βΓ=80 cpm
5.0 5.5	116083 05/01/93 10:00	2		6		(10YR, 2/1) BLACK, FLYASH, SLIGHTLY MOIST	N/A	N/A	PID=0 ppm βΓ=80 cpm
5.5 6.0	116084 116085 05/01/93 10:00	4		6		LOOSE, (2.5Y, 5/6) LIGHT OLIVE BROWN, CLAYEY SILT WITH GRAVEL, TRACE FLYASH	ML	N/A	PID=0 ppm βΓ=80 cpm

NOTES:
AT 26-26.5' MAGNESIM MODULES WERE FOUND IN THE SILT
THIS MAY INDICATE AN ORIGINARY SOIL HORIZON.

Driller: JOE RAAB, ROGER DAVIS
Drilling Equipment: CME-45

SAA = Same as Above
PID = Photoionization Detector
N/A = Not Applicable

0355

PROJECT NUMBER: 20.03.05	PROJECT NAME: CRU2 RI PHASE II FIELD INVESTIGATION	
BORING NUMBER: 1995	COORDINATES: NORTH 477770.18 EAST 1379054.76	DATE:01-MAY-93
GROUND ELEVATION: 567.9	GWL: Depth Date/Time	DATE STARTED: 01-MAY-93
ENGINEER/GEOLOGIST: J BOYER	Depth Date/Time	DATE COMPLETE: 02-MAY-93
DRILLING METHOD: HOLLOW STEM AUGER		

DEPTH	SAMPLE	DATE TIME	BLOWS ON	SAMPLE	RECOVERY	INCHES		USCS SYMBOL	TSF	REMARKS
6.0 6.5	116086 05/01/93 10:15		3		6		STIFF, (2.5Y; 5/6) LIGHT OLIVE BROWN, SILTY CLAY WITH GRAVEL AND FLYASH	CL	1.0	PID=.1 ppm βΓ=80 cpm
6.5 7.0	116087 05/01/93 10:15		4		6		SAA	CL	1	PID=.1 ppm βΓ=80 cpm
7.0 7.5	116088 05/01/93 10:15		4		3		SAA	CL	1	PID=.1 ppm βΓ=80 cpm
7.5 8.0	05/01/93 10:15		49		0		NO RECOVERY	N/A	N/A	
8.0 8.5	116090 05/01/93 13:15		1		6		(10YR, 2/1) BLACK, FLYASH, SLIGHTLY MOIST	N/A	N/A	PID=0 ppm βΓ=60 cpm
8.5 9.0	116090 05/01/93 13:15		1		6		SAA	N/A	N/A	PID=0 ppm βΓ=60 cpm
9.0 9.5	116091 116092 05/01/93 13:15		1		6		SAA	N/A	N/A	PID=0 ppm βΓ=60 cpm
9.5 10.0	05/01/93 13:15		1		0		NO RECOVERY	N/A	N/A	
10.0 10.5	116093 05/01/93 13:30		1		6		(10YR, 2/1) BLACK, FLYASH, SLIGHTLY MOIST	N/A	N/A	PID=0 ppm βΓ=60 cpm
10.5 11.0	116093 05/10/93 13:30		2		6		SAA	N/A	N/A	PID=0 ppm βΓ=60 cpm
11.0 11.5	116094 116095 05/01/93 13:30		2		6		SAA	N/A	N/A	PID=0 ppm βΓ=60 cpm
11.5 12.0	05/01/93 13:30		1		0		NO RECOVERY	N/A	N/A	
12.0 12.5	116096 05/01/93 14:00		2		6		(10YR, 2/1) BLACK, FLYASH, SLIGHTLY MOIST	N/A	N/A	PID=0 ppm βΓ=90 cpm

NOTES:
AT 26-26.5' MAGNESIM MODULES WERE FOUND IN THE SILT
THIS MAY INDICATE AN ORIGINARY SOIL HORIZON.

Driller: JOE RAAB, ROGER DAVIS
Drilling Equipment: CME-45

SAA = Same as Above
PID = Photoionization Detector
N/A = Not Applicable

0356

PROJECT NUMBER: 20.03.05	PROJECT NAME: CRU2 RI PHASE II FIELD INVESTIGATION	
BORING NUMBER: 1995	COORDINATES: NORTH 477770.18 EAST 1379054.76	DATE:01-MAY-93
GROUND ELEVATION: 567.9	GWL: Depth Date/Time	DATE STARTED: 01-MAY-93
ENGINEER/GEOLOGIST: J BOYER	Depth Date/Time	DATE COMPLETE: 02-MAY-93
DRILLING METHOD: HOLLOW STEM AUGER		

DEPTH	SAMPLE	DATE TIME	BLOWS ON SAMPLE	RECOVERY INCHES		USCS SYMBOL	TSF	REMARKS
12.5 13.0	116096 05/01/93 14:00		2	6	SAA	N/A	N/A	PID=0 ppm BΓ=90 cpm
13.0 13.5	116096 05/01/93 14:00		2	6	SAA	N/A	N/A	PID=0 ppm BΓ=90 cpm
13.5 14.0	116097 116098 05/01/93 14:00		2	6	SAA	N/A	N/A	PID=90 ppm BΓ=0 cpm
14.0 14.5	116099 05/01/93 14:15		1	6	SAA	N/A	N/A	PID=0 ppm BΓ=80 cpm
14.5 15.0	116099 05/01/93 14:15		1	6	SAA	N/A	N/A	PID=0 ppm BΓ=80 cpm
15.0 15.5	116100 116101 05/01/93 14:15		1	6	(10YR, 2/1) BLACK, FLYASH, SLIGHTLY MOIST	N/A	N/A	PID=0 ppm BΓ=80 cpm
15.5 16.0	05/01/93 14:15		1	0	NO RECOVERY	N/A	N/A	
16.0 16.5	116102 05/01/93 14:30		2	6	(10YR, 2/1) BLACK, FLYASH, SLIGHTLY MOIST	N/A	N/A	PID=0 ppm BΓ=60 cpm
16.5 17.0	116102 05/01/93 14:30		3	6	SAA	N/A	N/A	PID=0 ppm BΓ=60 cpm
17.0 17.5	116103 116104 05/01/93 14:30		3	3	SAA	N/A	N/A	PID=0 ppm BΓ=60 cpm
17.5 18.0	05/01/93 14:30		4	0	NO RECOVERY	N/A	N/A	
18.0 18.5	116105 05/01/93 14:50		5	6	(10YR, 2/1) BLACK, FLYASH, SLIGHTLY MOIST	N/A	N/A	PID=0 ppm BΓ=60 cpm

NOTES:
AT 26-26.5' MAGNESIM MODULES WERE FOUND IN THE SILT
THIS MAY INDICATE AN ORIGINARY SOIL HORIZON.

Driller: JOE RAAB, ROGER DAVIS
Drilling Equipment: CME-45

SAA = Same as Above
PID = Photoionization Detector
N/A = Not Applicable

PROJECT NUMBER: 20.03.05	PROJECT NAME: CRU2 RI PHASE II FIELD INVESTIGATION	
BORING NUMBER: 1995	COORDINATES: NORTH 477770.18 EAST 1379054.76	DATE:01-MAY-93
GROUND ELEVATION: 567.9	GWL: Depth Date/Time	DATE STARTED: 01-MAY-93
ENGINEER/GEOLOGIST: J BOYER	Depth Date/Time	DATE COMPLETE: 02-MAY-93
DRILLING METHOD: HOLLOW STEM AUGER		

DEPTH	SAMPLE	DATE TIME	BLOWS ON SAMPLE	RECOVERY	INCHES		USCS SYMBOL	TSF	REMARKS
18.5 19.0	116105 05/01/93 14:50		3	6		SAA	N/A	N/A	PID=0 ppm βΓ=60 cpm
19.0 19.5	116105 05/01/93 14:50		2	6		SAA	N/A	N/A	PID=0 ppm βΓ=60 cpm
19.5 20.0	116106 116107 05/01/93 14:50		6	6		SAA	N/A	N/A	PID=0 ppm βΓ=60 cpm
20.0 20.5	116108 05/01/93 15:30		1	6		SAA	N/A	N/A	PID=.3 ppm βΓ=60 cpm
20.5 21.0	116108 05/01/93 15:30		2	6		SAA	N/A	N/A	PID=.3 ppm βΓ=60 cpm
21.0 21.5	116108 05/01/93 15:30		1	6		SAA	N/A	N/A	PID=0.3 ppm βΓ=60 cpm
21.5 22.0	116109 116110 05/01/93 15:30		1	6		SAA	N/A	N/A	PID=.3 ppm βΓ=60 cpm
22.0 22.5	116111 05/01/93 15:40		2	6		SAA	N/A	N/A	PID=.3 ppm βΓ=40 cpm
22.5 23.0	116111 05/01/93 15:40		2	6		(10YR, 2/1) BLACK, FLYASH, SLIGHTLY MOIST	N/A	N/A	PID=.3 ppm βΓ=40 cpm
23.0 23.5	116111 05/01/93 15:40		4	6		SAA	N/A	N/A	PID=.3 ppm βΓ=40 cpm
23.5 24.0	116112 116113 05/01/93 15:40		7	6		SAA	N/A	N/A	PID=.3 ppm βΓ=40 cpm
24.0 24.5	116114 05/01/93 15:55		2	6		SAA	N/A	N/A	PID=.1 ppm βΓ=40 cpm

NOTES:
AT 26-26.5' MAGNESIM MODULES WERE FOUND IN THE SILT
THIS MAY INDICATE AN ORIGINARY SOIL HORIZON.

Driller: JOE RAAB, ROGER DAVIS
Drilling Equipment: CME-45

SAA = Same as Above
PID = Photoionization Detector
N/A = Not Applicable

0358

PROJECT NUMBER: 20.03.05	PROJECT NAME: CRU2 RI PHASE II FIELD INVESTIGATION	
BORING NUMBER: 1995	COORDINATES: NORTH 477770.18 EAST 1379054.76	DATE:01-MAY-93
GROUND ELEVATION: 567.9	GWL: Depth Date/Time	DATE STARTED: 01-MAY-93
ENGINEER/GEOLOGIST: J BOYER	Depth Date/Time	DATE COMPLETE: 02-MAY-93
DRILLING METHOD: HOLLOW STEM AUGER		

DEPTH	SAMPLE	DATE TIME	BLOWS ON SAMPLE	RECOVERY INCHES		USCS SYMBOL	TSF	REMARKS
24.5 25.0	116114 05/01/93 15:55	3	6	SAA		N/A	N/A	PID=.1 ppm BΓ=40 cpm
25.0 25.5	116114 05/01/93 15:55	4	6	SAA		N/A	N/A	PID=.1 ppm BΓ=40 cpm
25.5 26.0	116115 116116 05/01/93 15:55	1	6	SAA		N/A	N/A	PID=.1 ppm BΓ=40 cpm
26.0 26.5	116117 05/01/93 16:10	3	6	MEDIUM DENSE, (10YR, 3/2) VERY DARK GRAYISH BROWN, SILT, MOIST		ML	N/A	PID=0 ppm BΓ=60 cpm
26.5 27.0	116117 05/01/93 16:10	7	6	SAA		ML	2	PID=0 ppm BΓ=60 cpm
27.0 27.5	116118 116169 05/01/93 16:10	4	6	SAA		ML	3	PID=0 ppm BΓ=60 cpm
27.5 28.0	116118 116169 05/01/93 16:10	14	6	SAA		ML	3	PID=0 ppm BΓ=60 cpm
28.0 28.5	116170 05/01/93 16:30	15	6	VERY DENSE, MEDIUM DENSE, (10YR, 4/3) BROWN, CLAYEY SILT, NO PLATICITY, SLIGTHLY MOIST		ML	2.5	PID=.3 ppm BΓ=60 cpm
28.5 29.0	116170 05/01/93 16:30	21	6	SAA		ML	3.5	PID=.3 ppm BΓ=60 cpm
29.0 29.5	116170 05/01/93 16:30	27	6	SAA		ML	3.5	PID=.3 ppm BΓ=60 cpm
29.5 30.0	116170 05/01/93 16:30	28	4	SAA		ML	3	PID=.3 ppm BΓ=60 cpm
30.0 30.5	116172 05/02/93 09:30	34	6	DENSE, (10YR, 4/4) DARK YELLOWISH BROWN, CLAYEY SILT, TRACE GRAVEL, LOW PLASTICITY, MOIST		ML	N/A	PID=.9 ppm BΓ=80 cpm

NOTES:
AT 26-26.5' MAGNESIM MODULES WERE FOUND IN THE SILT
THIS MAY INDICATE AN ORIGINARY SOIL HORIZON.

Driller: JOE RAAB, ROGER DAVIS
Drilling Equipment: CME-45

SAA = Same as Above
PID = Photoionization Detector
N/A = Not Applicable

PROJECT NUMBER: 20.03.05	PROJECT NAME: CRU2 RI PHASE II FIELD INVESTIGATION	
BORING NUMBER: 1995	COORDINATES: NORTH 477770.18 EAST 1379054.76	DATE:01-MAY-93
GROUND ELEVATION: 567.9	GWL: Depth Date/Time	DATE STARTED: 01-MAY-93
ENGINEER/GEOLOGIST: J BOYER	Depth Date/Time	DATE COMPLETE: 02-MAY-93
DRILLING METHOD: HOLLOW STEM AUGER		

DEPTH	SAMPLE	DATE TIME	BLOWS ON	SAMPLE	RECOVERY	INCHES		USCS	SYMBOL	TSF	REMARKS
30.5 31.0	116172	05/02/93 09:30	13		6		SAA	ML		N/A	PID=.9 ppm βΓ=80 cpm
31.0 31.5	116172	05/02/93 09:30	16		6		MEDIUM DENSE, (10YR, 5/4) YELLOWISH BROWN, SILTY GRAVEL WITH COARSE SAND, POORLY GRADED, MOIST	GM		N/A	PID=.9 ppm βΓ=80 cpm
31.5 32.0	116173 116174	05/02/93 09:30	22		4		SAA	GM		N/A	PID=.9 ppm βΓ=80 cpm

NOTES:
AT 26-26.5' MAGNESIM MODULES WERE FOUND IN THE SILT
THIS MAY INDICATE AN ORIGINARY SOIL HORIZON.

Driller: JOE RAAB, ROGER DAVIS
Drilling Equipment: CME-45

SAA = Same as Above
PID = Photoionization Detector
N/A = Not Applicable

1360

PROJECT NUMBER: 20.03.05	PROJECT NAME: CRU2 RI PHASE II FIELD INVESTIGATION	
BORING NUMBER: 1996	COORDINATES: NORTH 477819.85 EAST 1379114.90	DATE:29-APR-93
GROUND ELEVATION: 565.5	GWL: Depth Date/Time	DATE STARTED: 29-APR-93
ENGINEER/GEOLOGIST: J BOYER	Depth Date/Time	DATE COMPLETE: 29-APR-93
DRILLING METHOD: HOLLOW STEM AUGER		

DEPTH	SAMPLE / DATE TIME	BLOWS ON SAMPLE	RECOVERY INCHES		USCS SYMBOL	TSF	REMARKS
1.5	112070 04/29/93 10:55	9 9 14	6	MEDIUM DENSE, (10YR,4/6) SANDY SILT WITH GRAVEL, MOIST TO DRY; (10YR,2/1), FLYASH, BLACK	ML SM	N/A	PID=0 ppm βΓ=80 cpm
1.5 2.0	112071 112072 04/29/93 10:55	27	6	MEDIUM DENSE, (10YR, 4/6) DARK YELLOWISH, CLAYEY SILTY WITH GRAVEL, SLIGHT PLASTICITY, MOIST	ML	N/A	PID=80 ppm βΓ=0 cpm
2.0 4.0	112073 04/29/93 11:15	N/A 22	0	SAA	N/A	N/A	PID=80 ppm βΓ=.0 cpm
2.0 2.5	112073 04/29/93 11:15	10	6	(10YR, 2/1) BLACK, FLYASH, WET	N/A	N/A	PID=80 ppm βΓ=0 cpm
2.5 3.0	112073 04/29/93 11:15	14	6	SAA	N/A	N/A	PID=80 ppm βΓ=0 cpm
4.0 4.5	112074 04/29/93 13:20	8	6	(10YR, 2/1) BLACK, FLYASH, WITH SILTY CLAY, AND GRAVEL	N/A	N/A	PID=60 ppm βΓ=0 cpm
4.5 6.0	04/29/93 13:20	8 6 8	0	NO RECOVERY	N/A	N/A	
6.0 6.5	112075 112076 04/29/93 13:25	6	6	(10YR, 2/1) BLACK, FLYASH, DRY	N/A	N/A	PID=60 ppm βΓ=0 cpm
6.5 7.0	112075 112076 04/29/93 13:25	6	6	SAA	N/A	N/A	PID=60 ppm βΓ=0 cpm
7.0 8.0	04/29/93 13:25	8	0	NO RECOVERY	N/A	N/A	
8.0 8.5	112077 04/29/93 13:40	4	6	(10YR, 2/1) BLACK, FLYASH, DRY	N/A	N/A	PID=80 ppm βΓ=0 cpm
8.5 9.0	112077 04/29/93 13:40	2	6	SAA	N/A	N/A	PID=80 ppm βΓ=0 cpm

NOTES:

Boring Contractor: PENNSYLVANIA DRILLING
Driller: JOE RAAB, ROGER DAVIS
Drilling Equipment: CME-45

SAA = Same as Above
PID = Photoionization Detector
N/A = Not Applicable

0361

PROJECT NUMBER: 20.03.05	PROJECT NAME: CRU2 RI PHASE II FIELD INVESTIGATION	
BORING NUMBER: 1996	COORDINATES: NORTH 477819.85 EAST 1379114.90	DATE:29-APR-93
GROUND ELEVATION: 565.5	GWL: Depth Date/Time	DATE STARTED: 29-APR-93
ENGINEER/GEOLOGIST: J BOYER	Depth Date/Time	DATE COMPLETE: 29-APR-93
DRILLING METHOD: HOLLOW STEM AUGER		

DEPTH	SAMPLE	DATE TIME	BLOWS ON	SAMPLE	RECOVERY	INCHES		USCS SYMBOL	TSF	REMARKS
9.0 9.5	112077 04/29/93 13:40		1		6		SAA	N/A	N/A	PID=80 ppm βΓ=0 cpm
9.5 10.0	112078 112079 04/29/93 13:40		2		3		SAA	N/A	N/A	PID=80 ppm βΓ=0 cpm
10.0 12.0	112080 04/29/93 13:50		N/A		N/A		SHELBY TUBE	N/A	N/A	
12.0 12.5	112081 04/29/93 14:00		1		6		(10YR, 2/1) BLACK, FLYASH, DRY	N/A	N/A	PID=80 ppm βΓ=0 cpm
12.5 13.0	112081 04/29/93 14:00		1		6		SAA	N/A	N/A	PID=80 ppm βΓ=0 cpm
13.0 13.5	112082 112083 04/29/93 14:00		1		6		SAA	N/A	N/A	PID=80 ppm βΓ=0 cpm
13.5 14.0	04/29/93 14:00		1		0		NO RECOVERY	N/A	N/A	
14.0 14.5	112084 04/29/93 14:30		4 3		6		(10YR, 2/1) BLACK, FLYASH, DRY	N/A	N/A	PID=80 ppm βΓ=0 cpm
14.5 15.0	112084 04/29/93 14:30		8		6		SAA	N/A	N/A	PID=80 ppm βΓ=0 cpm
15.0 15.5	112085 112086 04/29/93 14:50		11		6		(10YR, 2/1) BLACK, FLYASH, DRY, PLYWOOD FRAGMENT	N/A	N/A	PID=80 ppm βΓ=0 cpm
15.5 16.0	04/29/93 14:30		N/A		0		NO RECOVERY	N/A	N/A	
16.0 16.5	112087 04/29/93 14:45		7		6		(10YR, 2/1) BLACK, FLYASH, MOIST, WITH WOOD ODOR	N/A	N/A	βΓ=80 cpm

NOTES:

Boring Contractor: PENNSYLVANIA DRILLING
Driller: JOE RAAB, ROGER DAVIS
Drilling Equipment: CME-45

SAA = Same as Above
PID = Photoionization Detector
N/A = Not Applicable

0362

PROJECT NUMBER: 20.03.05	PROJECT NAME: CRU2 RI PHASE II FIELD INVESTIGATION	
BORING NUMBER: 1996	COORDINATES: NORTH 477819.85 EAST 1379114.90	DATE:29-APR-93
GROUND ELEVATION: 565.5	GWL: Depth Date/Time	DATE STARTED: 29-APR-93
ENGINEER/GEOLOGIST: J BOYER	Depth Date/Time	DATE COMPLETE: 29-APR-93
DRILLING METHOD: HOLLOW STEM AUGER		

DEPTH	SAMPLE	DATE TIME	BLOWS ON	SAMPLE	RECOVERY	INCHES		USCS SYMBOL	TSF	REMARKS
16.5 17.0	112088 04/29/93 14:45		21		6		MEDIUM DENSE, (2.5Y,6/4) LIGHT YELLOWISH BROWN, POORLY GRADED SAND, SLIGHTLY MOIST	N/A	N/A	βΓ=80 cpm
17.0 17.5	04/29/93 14:45		12		3		SAA	SP	N/A	PID=13.1 ppm βΓ=80 cpm
17.5 18.0	04/29/93 14:45		12		0		NO RECOVERY	N/A	N/A	
18.0 18.5	112090 04/29/93 15:20		11		6		MEDIUM DENSE, (2.5Y,5/6) LIGHT OLIVE BROWN, POORLY GRADED SAND, SLIGHTLY MOIST	SP	N/A	PID=14.1 ppm βΓ=80 cpm
18.5 19.0	116069 04/29/93 15:20		14		6		SAA	SP	N/A	PID=14.1 ppm βΓ=80 cpm
19.0 19.5	112089 04/29/93 15:20		10		2		SAA	SP	N/A	PID=14.1 ppm βΓ=80 cpm
19.5 20.0	04/29/93 15:20		9		0		NO RECOVERY	N/A	N/A	
20.0 20.5	116070 04/29/93 15:40		21		6		MEDIUM DENSE, (2.5Y,5/6) LIGHT OLIVE BROWN, POORLY GRADED SAND, SLIGHTLY MOIST	SP	N/A	PID=5.1 ppm βΓ=80 cpm
20.5 21.0	116070 04/29/93 15:40		12		6		SAA	SP	N/A	PID=5.1 ppm βΓ=80 cpm
21.0 21.5	116070 04/29/93 15:40		14		6		SAA	N/A	N/A	PID=5.1 ppm βΓ=80 cpm
21.5 22.0	116071 116072 04/29/93 15:40		11		4		SAA	SP	N/A	PID=5.1 ppm βΓ=80 cpm

NOTES:

Boring Contractor: PENNSYLVANIA DRILLING
Driller: JOE RAAB, ROGER DAVIS
Drilling Equipment: CME-45

SAA = Same as Above
PID = Photoionization Detector
N/A = Not Applicable

0363

PROJECT NUMBER: 20.03.05	PROJECT NAME: CRU2 RI PHASE II FIELD INVESTIGATION	
BORING NUMBER: 1997	COORDINATES: NORTH 477871.13 EAST 1378960.50	DATE:
GROUND ELEVATION: 570.4	GWL: Depth Date/Time	DATE STARTED: 05-MAY-93
ENGINEER/GEOLOGIST: J BOYER	Depth Date/Time	DATE COMPLETE: 07-MAY-93
DRILLING METHOD: HOLLOW STEM AUGER		

DEPTH	SAMPLE	DATE TIME	BLOWS ON SAMPLE	RECOVERY INCHES		USCS SYMBOL	TSF	REMARKS
.5	116177	05/05/93 09:20	4	6	LOOSE, (2.5Y,5/6) LIGHT OLIVE BROWN, CLAYEY SILT, TRACE GRAVEL, NO PLASTICITY, MOIST	ML	N/A	PID=0 ppm BΓ=60 cpm
.5 1.0	116177	05/05/93 09:20	4	6	SAA	ML	N/A	PID=0 ppm BΓ=60 cpm
1.0 1.5	116177	05/05/93 09:20	4	6	VERY STIFF, (5Y,5/6) OLIVE, SILTY CLAY, TRACE GRAVEL, LOW PLASTICITY, MOIST	CL	3	PID=0 ppm BΓ=60 cpm
1.5 2.0	116178 116179	05/05/93 09:20	8	4	SAA	CL	2.75	PID=0 ppm BΓ=60 cpm
2.0 2.5	116180	05/05/93 09:40	5	6	SAA	CL	2.25	PID=0 ppm BΓ=60 cpm
2.5 3.0	116180	05/05/93 09:40	7	6	SAA	CL	2.75	PID=0 ppm BΓ=60 cpm
3.0 3.5	116180	05/05/93 09:40	5	6	STIFF, (5Y,4/4) OLIVE, SILTY CLAY, WITH FLYASH, TRACE GRAVEL, LOW PLASTICITY, MOIST	CL	1.5	PID=0 ppm BΓ=60 cpm
3.5 4.0	116181 116182	05/05/93 09:40	7	3	SAA	CL	1.5	PID=0 ppm BΓ=60 cpm
4.0 4.5	116183	05/05/93 10:00	7	6	VERY STIFF, (2.5Y,5/6) LIGHT OLIVE BROWN, SILTY CLAY WITH GRAVEL, TRACE FLYASH, LOW PLASTICITY, MOIST	CL	3.5	PID=0 ppm BΓ=60 cpm
4.5 5.0	116183	05/05/93 10:00	11	6	SAA	CL	2.75	PID=0 ppm BΓ=60 cpm
5.0 5.5	116183	05/05/93 10:00	13	6	(10YR 2/1) BLACK, FLYASH, DRY	N/A	N/A	PID=0 ppm BΓ=60 cpm
5.5 6.0	116184 116185	05/05/93 10:00	15	6	SAA	N/A	N/A	PID=0 ppm BΓ=60 cpm

NOTES:

Driller: JOE RAAB
Drilling Equipment: HOLLOW STEM AUGER

SAA = Same as Above
PID = Photoionization Detector
N/A = Not Applicable

0064

PROJECT NUMBER: 20.03.05	PROJECT NAME: CRU2 RI PHASE II FIELD INVESTIGATION	
BORING NUMBER: 1997	COORDINATES: NORTH 477871.13 EAST 1378960.50	DATE:
GROUND ELEVATION: 570.4	GWL: Depth Date/Time	DATE STARTED: 05-MAY-93
ENGINEER/GEOLOGIST: J BOYER	Depth Date/Time	DATE COMPLETE: 07-MAY-93
DRILLING METHOD: HOLLOW STEM AUGER		

DEPTH	SAMPLE	DATE TIME	BLOWS ON	SAMPLE	RECOVERY	INCHES		USCS SYMBOL	TSF	REMARKS
6.0 6.5	116186	05/05/93 10:20	11		6		(10YR,2/1) BLACK, FLYASH, SLIGHTLY MOIST	N/A	N/A	PID=0 ppm βΓ=60 cpm
6.5 7.0	116186	05/05/93 10:20	17		6		SAA	N/A	N/A	PID=0 ppm βΓ=60 cpm
7.0 7.5	116186	05/05/93 10:20	22		6		SAA	N/A	N/A	PID=0 ppm βΓ=60 cpm
7.5 8.0	116187 116188	05/05/93 10:20	34		6		(10Y 2/1) BLACK, FLYASH, SLIGHTLY MOIST	N/A	N/A	PID=0 ppm βΓ=60 cpm
8.0 8.5	116189	05/05/93 10:30	2		6		SAA	N/A	N/A	PID=0 ppm βΓ=60 cpm
8.5 9.0	116189	05/05/93 10:30	2		6		SAA	N/A	N/A	PID=0 ppm βΓ=60 cpm
9.0 9.5	116189	05/05/93 10:30	2		6		SAA	N/A	N/A	PID=0 ppm βΓ=60 cpm
9.5 10.0	116190 116191	05/05/93 10:30	2		2		SAA	N/A	N/A	PID=0 ppm βΓ=60 cpm
10.0 10.5	116192	05/05/93 13:00	3		6		SAA	N/A	N/A	PID=0 ppm βΓ=40 cpm
10.5 11.0	116192	05/05/93 13:00	2		6		SAA	N/A	N/A	PID=0 ppm βΓ=40 cpm
11.0 11.5	116192	05/05/93 13:00	3		6		SAA	N/A	N/A	PID=0 ppm βΓ=40 cpm
11.5 12.0	116193 116194	05/05/93 13:00	1		3		SAA	N/A	N/A	PID=0 ppm βΓ=40 cpm

NOTES:

Driller: JOE RAAB
Drilling Equipment: HOLLOW STEM AUGER

SAA = Same as Above
PID = Photoionization Detector
N/A = Not Applicable

0365

PROJECT NUMBER: 20.03.05	PROJECT NAME: CRU2 RI PHASE II FIELD INVESTIGATION	
BORING NUMBER: 1997	COORDINATES: NORTH 477871.13 EAST 1378960.50	DATE:
GROUND ELEVATION: 570.4	GWL: Depth Date/Time	DATE STARTED: 05-MAY-93
ENGINEER/GEOLOGIST: J BOYER	Depth Date/Time	DATE COMPLETE: 07-MAY-93
DRILLING METHOD: HOLLOW STEM AUGER		

DEPTH	SAMPLE	DATE TIME	BLOWS ON SAMPLE	RECOVERY INCHES		USCS SYMBOL	TSF	REMARKS
12.0 12.5	116195 05/05/93 13:25		2	6	SAA	N/A	N/A	PID=0 ppm βΓ=60 cpm
12.5 13.0	116195 05/05/93 13:25		2	6	SAA	N/A	N/A	PID=0 ppm βΓ=60 cpm
13.0 13.5	116195 05/05/93 13:25		2	6	SAA	N/A	N/A	PID=0 ppm βΓ=60 cpm
13.5 14.0	116196 116197 05/05/93 13:25		2	2	SAA	N/A	N/A	PID=0 ppm βΓ=60 cpm
14.0 14.5	116198 05/05/93 13:35		4	6	SAA	N/A	N/A	PID=0 ppm βΓ=60 cpm
14.5 15.0	116198 05/05/93 13:35		3	6	SAA	N/A	N/A	PID=0 ppm βΓ=60 cpm
15.0 15.5	116198 05/05/93 13:35		2	6	(10Y 2/1) BLACK, FLYASH, SLIGHTLY MOIST	N/A	N/A	PID=0 ppm βΓ=60 cpm
15.5 16.0	116199 116200 05/05/93 13:35		3	6	SAA	N/A	N/A	PID=0 ppm βΓ=60 cpm
16.0 16.5	116201 05/05/93 13:50		4	6	SAA	N/A	N/A	PID=0 ppm βΓ=60 cpm
16.5 17.0	116201 05/05/93 13:50		3	6	SAA	N/A	N/A	PID=0 ppm βΓ=60 cpm
17.0 17.5	116201 05/05/93 13:50		3	6	SAA	N/A	N/A	PID=0 ppm βΓ=60 cpm
17.5 18.0	116202 116203 05/05/93 13:50		2	2	SAA	N/A	N/A	PID=0 ppm βΓ=60 cpm

NOTES:

Driller: JOE RAAB
Drilling Equipment: HOLLOW STEM AUGER

SAA = Same as Above
PID = Photoionization Detector
N/A = Not Applicable

0366

PROJECT NUMBER: 20.03.05	PROJECT NAME: CRU2 RI PHASE II FIELD INVESTIGATION	
BORING NUMBER: 1997	COORDINATES: NORTH 477871.13 EAST 1378960.50	DATE:
GROUND ELEVATION: 570.4	GWL: Depth Date/Time	DATE STARTED: 05-MAY-93
ENGINEER/GEOLOGIST: J BOYER	Depth Date/Time	DATE COMPLETE: 07-MAY-93
DRILLING METHOD: HOLLOW STEM AUGER		

DEPTH	SAMPLE	DATE TIME	BLOWS ON	SAMPLE	RECOVERY	INCHES		USCS SYMBOL	TSF	REMARKS
18.0 18.5	116204 05/05/93 14:00		4		6		SAA	N/A	N/A	PID=0 ppm βΓ=60 cpm
18.5 19.0	116204 05/05/93 14:00		2		6		SAA	N/A	N/A	PID=0 ppm βΓ=60 cpm
19.0 19.5	116204 05/05/93 14:00		2		6		SAA	N/A	N/A	PID=0 ppm βΓ=60 cpm
19.5 20.0	116205 116206 05/05/93 14:00		3		6		SAA	N/A	N/A	PID=0 ppm βΓ=60 cpm
20.0 20.5	116207 05/05/93 14:50		5		6		SAA	N/A	N/A	PID=0 ppm βΓ=60 cpm
20.5 21.0	116207 05/05/93 14:50		3		6		SAA	N/A	N/A	PID=0 ppm βΓ=60 cpm
21.0 21.5	116207 05/05/93 14:50		2		6		SAA	N/A	N/A	PID=0 ppm βΓ=60 cpm
21.5 22.0	116208 116209 05/05/93 14:50		2		3		SAA	N/A	N/A	PID=0 ppm βΓ=60 cpm
22.0 22.5	116210 05/05/93 15:00		5		6		SAA	N/A	N/A	PID=0 ppm βΓ=60 cpm
22.5 23.0	116210 05/05/93 15:00		3		6		(10YR 2/1) BLACK, FLYASH, SLIGHTLY MOIST	N/A	N/A	PID=0 ppm βΓ=60 cpm
23.0 23.5	116210 05/05/93 15:00		2		6		SAA	N/A	N/A	PID=0 ppm βΓ=60 cpm
23.5 24.0	116211 116212 05/05/93 15:00		1		4		SAA	N/A	N/A	PID=0 ppm βΓ=60 cpm

NOTES:

Driller: JOE RAAB
Drilling Equipment: HOLLOW STEM AUGER

SAA = Same as Above
PID = Photoionization Detector
N/A = Not Applicable

PROJECT NUMBER: 20.03.05	PROJECT NAME: CRU2 RI PHASE II FIELD INVESTIGATION	
BORING NUMBER: 1997	COORDINATES: NORTH 477871.13 EAST 1378960.50	DATE:
GROUND ELEVATION: 570.4	GWL: Depth Date/Time	DATE STARTED: 05-MAY-93
ENGINEER/GEOLOGIST: J BOYER	Depth Date/Time	DATE COMPLETE: 07-MAY-93
DRILLING METHOD: HOLLOW STEM AUGER		

DEPTH	SAMPLE	DATE TIME	BLOWS ON SAMPLE	RECOVERY INCHES		USCS SYMBOL	TSF	REMARKS
24.0 24.5	116213 05/05/93 15:10		2	6	SAA	N/A	N/A	PID=0 ppm BΓ=60 cpm
24.5 25.0	116213 05/05/93 15:10		2	6	SAA	N/A	N/A	PID=0 ppm BΓ=60 cpm
25.0 25.5	116213 05/05/93 15:10		2	6	SAA	N/A	N/A	PID=0 ppm BΓ=60 cpm
25.5 26.0	116214 116215 05/05/93 15:10		2	4	SAA	N/A	N/A	PID=0 ppm BΓ=60 cpm
26.0 26.5	116216 05/05/93 15:15		2	6	(10YR 2/1) BLACK, FLYASH, MOIST	N/A	N/A	PID=0 ppm BΓ=60 cpm
26.5 27.0	116216 05/05/93 15:15		3	6	SAA	N/A	N/A	PID=0 ppm BΓ=60 cpm
27.0 27.5	116216 05/05/93 15:15		2	6	SAA	N/A	N/A	PID=0 ppm BΓ=60 cpm
27.5 28.0	116217 116218 05/05/93 15:15		4	3	SAA	N/A	N/A	PID=0 ppm BΓ=60 cpm
28.0 28.5	116241 116242 05/06/93 09:00		5	6	SAA	N/A	N/A	PID=0 ppm BΓ=60 cpm
28.5 29.0	116243 05/06/93 09:00		4	6	LOOSE, (5Y,4/4) OLIVE, SILT, MOIST, NO PLASTICITY	ML	N/A	PID=0 ppm BΓ=60 cpm
29.0 29.5	116243 05/06/93 09:00		5	6	SAA	ML	N/A	PID=0 ppm BΓ=60 cpm
29.5 30.0	116243 05/06/93 09:00		1	6	SAA	ML	N/A	PID=0 ppm BΓ=60 cpm

NOTES:

Driller: JOE RAAB
Drilling Equipment: HOLLOW STEM AUGER

SAA = Same as Above
PID = Photoionization Detector
N/A = Not Applicable

0368

PROJECT NUMBER: 20.03.05	PROJECT NAME: CRU2 RI PHASE II FIELD INVESTIGATION	
BORING NUMBER: 1997	COORDINATES: NORTH 477871.13 EAST 1378960.50	DATE:
GROUND ELEVATION: 570.4	GWL: Depth Date/Time	DATE STARTED: 05-MAY-93
ENGINEER/GEOLOGIST: J BOYER	Depth Date/Time	DATE COMPLETE: 07-MAY-93
DRILLING METHOD: HOLLOW STEM AUGER		

DEPTH	SAMPLE DATE TIME	BLOWS ON SAMPLE	RECOVERY INCHES		USCS SYMBOL	TSF	REMARKS
30.0 30.5	116244 116245 05/06/93 09:25	7	6	MEDIUM DENSE, (5Y,3/2) DARK OLIVE GRAY, CLAYEY SILT, TRACE COARSE SAND, SLIGHT PLASTICITY, MOIST	ML	N/A	PID=0 ppm BΓ=60 cpm
30.5 31.0	116246 05/05/93 09:25	9	6	SAA	ML	N/A	PID=0 ppm BΓ=60 cpm
31.0 31.5	116247 05/05/93 09:25	11	6	SAA	ML	N/A	PID=0 ppm BΓ=60 cpm
31.5 32.0	116248 05/05/93 09:25	14	4	SAA	ML	N/A	PID=0 ppm BΓ=60 cpm
32.0 32.5	116249 05/05/93 10:20	N/A	6	SAA	ML	N/A	
32.5 33.0	116249 05/05/93 10:20	N/A	6	UNKNOWN	N/A	N/A	
33.0 33.5	116249 05/05/93 10:20	N/A	6	UNKNOWN	N/A	N/A	
33.5 34.0	116249 05/05/93 10:20	N/A	6	(10YR,4/3) BROWN, CLAYEY SILT WITH COARSE SAND, SLIGHT PLASTICITY, MOIST	N/A	N/A	
34.0 34.5	116252 05/05/93 09:30	4	6	STIFF, (2.5Y,4/2) DARK GRAYISH BROWN, SILTY CLAY WITH FLYASH, LOW PLASTICITY, MOIST	CL	1	PID=0 ppm BΓ=60 cpm
34.5 35.0	116252 05/05/93 09:30	6	6	SAA	N/A CL	N/A 1	PID=0 ppm BΓ=60 cpm
35.0 35.5	116252 05/05/93 09:30	8	6	MEDIUM DENSE, (10YR,4/3) BROWN, CLAYEY SILT WITH GRAVEL, SLIGHT PLASTICITY, MOIST	N/A ML	N/A	PID=0 ppm BΓ=60 cpm
35.5 36.0	116253 116254 05/05/93 09:30	9	6	SAA	ML	N/A	PID=0 ppm BΓ=60 cpm

NOTES:

Driller: JOE RAAB
Drilling Equipment: HOLLOW STEM AUGER

SAA = Same as Above
PID = Photoionization Detector
N/A = Not Applicable

0369

PROJECT NUMBER: 20.03.05	PROJECT NAME: CRU2 RI PHASE II FIELD INVESTIGATION	
BORING NUMBER: 1997	COORDINATES: NORTH 477871.13 EAST 1378960.50	DATE:
GROUND ELEVATION: 570.4	GWL: Depth Date/Time	DATE STARTED: 05-MAY-93
ENGINEER/GEOLOGIST: J BOYER	Depth Date/Time	DATE COMPLETE: 07-MAY-93
DRILLING METHOD: HOLLOW STEM AUGER		

DEPTH	SAMPLE	DATE TIME	BLOWS ON	SAMPLE	RECOVERY	INCHES		USCS SYMBOL	TSF	REMARKS
36.0 36.5	116256 05/05/93 09:50		4		N/A		SAA	ML	N/A	PID=0 ppm βΓ=60 cpm
36.5 37.0	116255 116256 05/05/93 09:50		9		N/A		MEDIUM DENSE, (2.5Y,5/4) SILT WITH GRAVEL AND FLYASH, MOIST	N/A ML	N/A	PID=0 ppm βΓ=60 cpm
37.0 37.5	116255 116256 05/05/93 09:50		12		N/A		MEDIUM DENSE, SILT WITH GRAVEL AND COARSE SAND	N/A	N/A	PID=0 ppm βΓ=60 cpm
37.5 38.0	116255 116256 05/05/93 09:50		12		N/A		MEDIUM DENSE, (2.5Y,5/6) LIGHT OLIVE BROWN, SILT WITH COARSE SAND, MOIST	ML	N/A	PID=0 ppm βΓ=60 cpm
38.0 38.5	116257 05/05/93 10:15		9		6		MEDIUM DENSE, (2.5Y,5/6) LIGHT OLIVE BROWN, SILTY GRAVEL WITH COARSE SAND, MOIST	GM	N/A	PID=0 ppm βΓ=60 cpm
38.5 39.0	116257 05/05/93 10:15		11		6		SAA	GM	N/A	PID=0 ppm βΓ=60 cpm
39.0 39.5	116258 116259 05/05/93 10:15		13		6		SAA	GM	N/A	PID=0 ppm βΓ=60 cpm
39.5 40.0	05/05/93 10:15		13		0		NO RECOVERY	N/A	N/A	PID=0 ppm βΓ=60 cpm

NOTES:

Driller: JOE RAAB
Drilling Equipment: HOLLOW STEM AUGER

SAA = Same as Above
PID = Photoionization Detector
N/A = Not Applicable

0370

PROJECT NUMBER: WBS 20.03.05	PROJECT NAME:	
BORING NUMBER: 1998	COORDINATES: NORTH 478091.60 EAST 1379032.88	DATE:27-APR-93
GROUND ELEVATION: 569.5	GWL: Depth Date/Time	DATE STARTED: 27-APR-93
ENGINEER/GEOLOGIST: DEBES/BOYER	Depth Date/Time	DATE COMPLETE: 27-APR-93
DRILLING METHOD: HOLLOW STEM AUGER		

DEPTH	SAMPLE	DATE TIME	BLOWS ON SAMPLE	RECOVERY INCHES		USCS SYMBOL	TSF	REMARKS
.5	112040 04/27/93 16:05		7	6	BLACK, (2.5Y, 2.5/1) SILTY SAND, LOW PLASTICITY, DRY	SM	N/A	PID=0 ppm βΓ=120 cpm
.5	112042 116073 116075 04/28/93 08:40		8	6	BLACK, (2.5Y, 2.5/1) SILTY SAND, LOW PLASTICITY, DRY	SM	N/A	PID=0.3 ppm βΓ=60 cpm
.5 1.0	112040 04/27/93 16:05		9	6	BLACK, (2.5Y, 2.5/1) FLYASH	N/A	N/A	PID=0 ppm βΓ=120 cpm
.5 1.0	112042 116073 116075 04/28/93 08:40		7	6	BLACK (2.5Y 2.5/1) FLYASH	N/A	N/A	PID=0.3 ppm βΓ=60 cpm
1.0 1.5	112040 04/27/93 16:05		14	6	SAA	N/A	N/A	PID=0 ppm βΓ=120 cpm
1.0 1.5	116075 112042 116073 04/28/93 08:40		14	6	SAA	N/A	N/A	PID=0.3 ppm βΓ=60 cpm
1.5 2.0	112040 04/27/93 16:05		25	6	SAA	N/A	N/A	PID=0 ppm βΓ=120 cpm
1.5 2.0	112043 112044 04/28/93 08:40		18	6	SAA	N/A	N/A	PID=0.3 ppm βΓ=60 cpm
2.0 2.5	112041 04/27/93 16:30		N/A	6	SHELBY TUBE	N/A	N/A	
2.0 2.5	112045 116074 04/28/93 09:05		5	6	SAA	N/A	N/A	PID=0.5 ppm βΓ=80 cpm
2.5 3.0	112041 04/27/93 16:30		N/A	6	SHELBY TUBE	N/A	N/A	

NOTES:

Driller: JOE RAAB
Drilling Equipment: CME-45

SAA = Same as Above
PID = Photoionization Detector
N/A = Not Applicable

PROJECT NUMBER: WBS 20.03.05	PROJECT NAME:	
BORING NUMBER: 1998	COORDINATES: NORTH 478091.60 EAST 1379032.88	DATE:27-APR-93
GROUND ELEVATION: 569.5	GWL: Depth Date/Time	DATE STARTED: 27-APR-93
ENGINEER/GEOLOGIST: DEBES/BOYER	Depth Date/Time	DATE COMPLETE: 27-APR-93
DRILLING METHOD: HOLLOW STEM AUGER		

DEPTH	SAMPLE DATA TIME	BLOWS ON SAMPLE	RECOVERY INCHES		USCS SYMBOL	TSF	REMARKS
2.5 3.0	112045 116074 04/28/93 09:05	5	6	SAA	N/A	N/A	PID=0.5 ppm βΓ=80 cpm
3.0 3.5	112041 04/27/93 16:30	N/A	6	SHELBY TUBE	N/A	N/A	
3.0 3.5	112045 116074 04/28/93 09:05	5	6	SAA	N/A	N/A	PID=0.5 ppm βΓ=80 cpm
3.5 4.0	112041 04/27/93 16:30	N/A	6	SHELBY TUBE	N/A	N/A	
3.5 4.0	112046 112047 04/28/93 09:05	5	6	VERY STIFF, YELLOWISH BROWN, (10YR, 5/4) SILTY CLAY, LOW PLASTICITY, DRY	CL	2.5	PID=0.5 ppm βΓ=80 cpm
4.0 4.5	112048 04/28/93 09:30	3	6	BLACK, (2.5Y, 2.5Y) SILTY SAND, LOW PLASTICITY, DRY	SM	N/A	PID=0.6 ppm βΓ=80 cpm
4.5 5.0	112048 04/28/93 09:30	3	6	BLACK, (2.5Y, 2.5/1) FLYASH	N/A	N/A	PID=0.6 ppm βΓ=80 cpm
5.0 5.5	112048 04/28/93 09:30	N/A 6	6	STIFF, YELLOWISH BROWN, (10YR, 5/4), SILTY CLAY WITH ROOTS AND WOOD FRAGMENTS, LOW PLASTICITY, DRY	N/A CL	N/A 1.7	PID=0.6 ppm βΓ=80 cpm
5.5 6.0	112049 112050 04/28/93 09:30	14	6	SAA	CL	1.75	PID=0.6 ppm βΓ=80 cpm
6.0 6.5	112051 04/28/93 09:50	5	6	BLACK, (2.5Y, 2.5/1), FLYASH, WET	N/A	N/A	PID=0.6 ppm βΓ=80 cpm
6.5 7.0	112051 04/28/93 09:50	17	6	HARD, LIGHT YELLOWISH BROWN, (10YR, 6/4) AND GRAY (10YR, 7/2) SILTY CLAY, MEDIUM PLASTICITY, SLIGHT MOIST	N/A CL	N/A 3.5	PID=0.6 ppm βΓ=80 cpm
7.0 7.5	112051 04/28/93 09:50	22	6	SAA	N/A CL	N/A 3.5	PID=0.6 ppm βΓ=80 cpm

NOTES:

Driller: JOE RAAB
Drilling Equipment: CME-45

SAA = Same as Above
PID = Photoionization Detector
N/A = Not Applicable

0372

PROJECT NUMBER: WBS 20.03.05	PROJECT NAME:	
BORING NUMBER: 1998	COORDINATES: NORTH 478091.60 EAST 1379032.88	DATE:27-APR-93
GROUND ELEVATION: 569.5	GWL: Depth Date/Time	DATE STARTED: 27-APR-93
ENGINEER/GEOLOGIST: DEBES/BOYER	Depth Date/Time	DATE COMPLETE: 27-APR-93
DRILLING METHOD: HOLLOW STEM AUGER		

DEPTH	SAMPLE	DATE TIME	BLOWS ON	SAMPLE	RECOVERY	INCHES		USCS SYMBOL	TSF	REMARKS
7.5 8.0	112052 112053	04/28/93 09:50	28		6		SAA	CL	3.5	PID=0.6 ppm BΓ=80 cpm
8.0 8.5	112054	04/28/93 10:55	8		6		BLACK, (2.5Y, 2.5/1), FLYASH, MOIST	N/A	N/A	PID=0.5 ppm BΓ=60 cpm
8.5 9.0	112054	04/28/93 10:55	6		6		VERY STIFF, LIGHT YELLOWISH BROWN, (10YR, 6/4), SILTY CLAY, LOW PLASTICITY, DRY	N/A CL	N/A 2.5	PID=0.5 ppm BΓ=60 cpm
9.0 9.5	112054	04/28/93 10:55	8		6		BLACK, (2.5Y, 2.5/1), FLYASH, WET	N/A	N/A	PID=0.5 ppm BΓ=60 cpm
9.5 10.0	112055 112056	04/28/93 10:55	14		6		VERY STIFF, GRAY, (10YR, 6/1) SILTY CLAY WITH IRON STRINGERS AND GRAVEL, LOW PLASTICITY, DRY	CL	3	PID=0.5 ppm BΓ=60 cpm
10.0 10.5	112057	04/28/93 13:30	3		6		MEDIUM STIFF, LIGHT BROWNISH GRAY, (10YR, 6/2), SILTY CLAY, MEDIUM PLASTICITY, DRY	CL	1.5	PID=0.3 ppm BΓ=60 cpm
10.5 11.0	112057	04/28/93 13:30	6		6		SAA	N/A CL	N/A 1.5	PID=0.3 ppm BΓ=60 cpm
11.0 11.5	112057	04/28/93 13:30	12		6		LIGHT OLIVE BROWN, (2.5Y, 5/4), WELL GRADED, GRAVELLEY SAND, WET	N/A SW	N/A	PID=0.3 ppm BΓ=60 cpm
11.5 12.0	112058 112059	04/28/93 13:30	17		6		HARD, LIGHT OLIVE BROWN, (2.5Y, 5/4), SILTY CLAY WITH PEA GRAVEL, LOW PLASTICITY, DRY	CL	3.5	PID=0.3 ppm BΓ=60 cpm
12.0 12.5	112060	04/28/93 13:55	4		6		LIGHT OLIVE BROWN, (2.5Y 5/4), POORLY GRADED GRAVELLEY SAND, WET	SP	N/A	PID=0.5 ppm BΓ=60 cpm
12.5 13.0	112060	04/28/93 13:55	10		6		STIFF, GRAY, (2.5Y, 5/1), SILTY CLAY WITH PEA GRAVEL, DRY	N/A CL	N/A 3.5	PID=0.5 ppm BΓ=60 cpm
13.0 13.5	112060	04/28/93 13:55	17		6		SAA	N/A CL	N/A 3.5	PID=0.5 ppm BΓ=60 cpm

NOTES:

Driller: JOE RAAB
Drilling Equipment: CME-45

SAA = Same as Above
PID = Photoionization Detector
N/A = Not Applicable

0373

PROJECT NUMBER: WBS 20.03.05	PROJECT NAME:	
BORING NUMBER: 1998	COORDINATES: NORTH 478091.60 EAST 1379032.88	DATE:27-APR-93
GROUND ELEVATION: 569.5	GWL: Depth Date/Time	DATE STARTED: 27-APR-93
ENGINEER/GEOLOGIST: DEBES/BOYER	Depth Date/Time	DATE COMPLETE: 27-APR-93
DRILLING METHOD: HOLLOW STEM AUGER		

DEPTH	SAMPLE	DATE TIME	BLOWS ON SAMPLE	RECOVERY INCHES		USCS SYMBOL	TSF	REMARKS
13.5 14.0	112061 112062 04/28/93 13:55	20	6	SAA		CL	3.5	PID=0.5 ppm βΓ=60 cpm
14.0 14.5	112063 04/28/93 14:10	3	6	STIFF, GRAY, (2.5Y, 5/1), SILTY CLAY WITH PEA GRAVEL, MEDIUM PLASTICITY, SLIGHTLY MOIST		CL	3	PID=0.5 ppm βΓ=60 cpm
14.5 15.0	112063 04/28/93 14:10	5	6	SAA		N/A CL	N/A 3	PID=0.5 ppm βΓ=60 cpm
15.0 15.5	112063 04/28/93 14:10	12	6	STIFF, GRAY, (2.5Y, 5/1), SILTY CLAY WITH PEA GRAVEL, MEDIUM PLASTICITY, SLIGHT MOIST		N/A CL	N/A 3	PID=0.5 ppm βΓ=60 cpm
15.5 16.0	112063 04/28/93 14:10	14	3	GRAY, (2.5Y, 5/1), POORLY GRADED SAND, MOIST		SP	N/A	PID=0.5 ppm βΓ=60 cpm
16.0 16.5	112064 04/28/93 14:30	N/A	6	SHELBY TUBE		N/A	N/A	
16.5 17.0	112064 04/28/93 14:30	N/A	6	SHELBY TUBE		N/A	N/A	
17.0 17.5	112065 04/28/93 15:24	50	6	HARD, GRAY, (2.5Y, 5/1), SILTY CLAY WITH PEA GRAVEL, LOW PLASTICITY, DRY (HARD PAN)		CL	4	PID=0.5 ppm βΓ=60 cpm
17.5 18.0	112065 04/28/93 15:24	50	6	SAA		N/A CL	N/A 4	PID=0.5 ppm βΓ=60 cpm
18.0 18.5	112065 04/28/93 15:24	50	6	SAA		N/A CL	N/A 4	PID=0.5 ppm βΓ=60 cpm
18.5 19.0	112066 112067 04/28/93 15:24	50	6	SAA		CL	4	PID=0.5 ppm βΓ=60 cpm

NOTES:

Driller: JOE RAAB
Drilling Equipment: CME-45

SAA = Same as Above
PID = Photoionization Detector
N/A = Not Applicable

0374

5174

PROJECT NUMBER: 20.03.05	PROJECT NAME: CRU2 RI PHASE II FIELD INVESTIGATION	
BORING NUMBER: 1999	COORDINATES: NORTH 478059.27 EAST 1379040.99	DATE:19-APR-93
GROUND ELEVATION: 569.1	GWL: Depth Date/Time	DATE STARTED: 19-APR-93
ENGINEER/GEOLOGIST: A COMO	Depth Date/Time	DATE COMPLETE: 19-APR-93
DRILLING METHOD: HOLLOW STEM AUGER		

DEPTH	SAMPLE	DATE TIME	BLOWS ON	SAMPLE	RECOVERY	INCHES		USCS SYMBOL	TSF	REMARKS
.5	111897	04/19/93 08:30	7		6		MEDIUM DENSE, (2.5YR, 5/0) BLACK, GRITTY SILT-LIKE MATERIAL, (BLACK ASH), DRY	N/A	N/A	PID=.6 ppm βΓ=30-40 cpm
.5 1.0	111898	04/19/93 08:30	8		6		SAA	N/A	N/A	PID=.6 ppm βΓ=30-40 cpm
1.0 1.5	111899	04/19/93 08:30	7		3		SAA	N/A	N/A	PID=.6 ppm βΓ=30-40 cpm
1.5 2.0	111900	04/19/93 08:35	7		6		SAA	N/A	N/A	PID=.6 ppm βΓ=20-30 cpm
2.0 2.5	111901	04/19/93 08:35	9		6		SAA	N/A	N/A	PID=.6 ppm βΓ=20-30 cpm
2.5 3.0	111902	04/19/93 08:35	9		6		SAA	N/A	N/A	PID=.6 ppm βΓ=20-30 cpm
3.0 3.5	111903	04/19/93 08:40	7		6		SAA	N/A	N/A	PID=.6 ppm βΓ=20-30 cpm
3.5 3.8	111904	04/19/93 08:40	12		3		SAA	N/A	N/A	PID=.6 ppm βΓ=20-30 cpm
3.8 4.0	111904	04/19/93 08:40	12		3		HARD, (2.5Y, 5/6) LIGHT OLIVE BROWN, SILTY CLAY, LOW PLASTICITY, DRY	CL	4.5	PID=.6 ppm βΓ=20-30 cpm
4.0 4.5	111905	04/19/93 08:40	22		6		SAA	N/A	N/A	PID=.6 ppm βΓ=20-30 cpm
4.5 5.0	111906	04/19/93 08:45	7		6		SAA	N/A	N/A	PID=.6 ppm βΓ=20-30 cpm
5.0 5.5	111907	04/19/93 08:45	12		6		VERY STIFF, (2.5Y, 5/6) LIGHT OLIVE BROWN, SILTY CLAY, LOW PLASTICITY, DRY	CL	2.5	PID=.6 ppm βΓ=20-30 cpm
5.5 6.0	111908	04/19/93 08:45	8		6		SAA	CL	3.25	PID=.6 ppm βΓ=20-30 cpm

NOTES:
BACKGROUND: HNU=0.6PPM,BETA GAMMA=20-40CPM

Driller: D SMITH
Drilling Equipment: MOBILE B-80

SAA = Same as Above
PID = Photoionization Detector
N/A = Not Applicable

0375

PROJECT NUMBER: 20.03.05	PROJECT NAME: CRU2 RI PHASE II FIELD INVESTIGATION	
BORING NUMBER: 1999	COORDINATES: NORTH 478059.27 EAST 1379040.99	DATE:19-APR-93
GROUND ELEVATION: 569.1	GWL: Depth Date/Time	DATE STARTED: 19-APR-93
ENGINEER/GEOLOGIST: A COMO	Depth Date/Time	DATE COMPLETE: 19-APR-93
DRILLING METHOD: HOLLOW STEM AUGER		

DEPTH	SAMPLE	DATE TIME	BLOWS ON SAMPLE	RECOVERY INCHES		USCS SYMBOL	TSF	REMARKS
6.0 6.5	111909	04/19/93 08:50	8	6	SAA	CL	3.25	PID=.6 ppm BΓ=20-30 cpm
6.5 7.0	111910	04/19/93 08:50	10	6	SAA, MOIST	CL	3.00	PID=0.6 ppm BΓ=20-30 cpm
7.0 7.5		04/19/93 08:50	12	0	NO RECOVERY	N/A	N/A	
7.5 8.0	111911	04/19/93 08:55	8	6	MEDIUM DENSE, (10YR, 4/4) DARK YELLOWISH BROWN, CLAYEY SILT, SOME BLACK ASH, LOW PLASTICITY, WET	ML	N/A	PID=0.6 ppm BΓ=20-30 cpm
8.0 8.5	111912	04/19/93 08:55	12	6	SAA, WITH SOME SAND, WELL GRADED, WET	ML	N/A	PID=0.6 ppm BΓ=20-30 cpm
8.5 9.0	111913	04/19/93 08:55	10	6	SAA	ML	N/A	PID=0.6 ppm BΓ=20-30 cpm
9.0 9.5	111914	04/19/93 09:00	12	6	SAA	ML	N/A	PID=0.6 ppm BΓ=10-20 cpm
9.5 10.0	111915	04/19/93 09:00	16	6	HARD, (2.5Y, 5/4) LIGHT OLIVE BROWN, SILTY CLAY, LOW PLASTICITY, MOIST	CL	4.75	PID=0.6 ppm BΓ=10-20 cpm
10.0 10.5	111916	04/19/93 09:00	15	6	HARD, (2.5Y, 5/4) LIGHT OLIVE BROWN, SILTY CLAY, SOME GRAVEL, LOW PLASTICITY, MOIST	CL	4.5	PID=0.6 ppm BΓ=10-20 cpm
10.5 11.0	111917	04/19/93 09:05	18	6	SAA	CL	3.25	PID=0.6 ppm BΓ=20-30 cpm
11.0 11.5	111918	04/19/93 09:05	12	6	VERY STIFF, (2.5Y, 5/6) LIGHT OLIVE BROWN, SILTY CLAY, SOME GRAVEL , LOW PLASTICITY, DRY	CL	3.5	PID=0.6 ppm BΓ=20-30 cpm
11.5 12.0	111919	04/19/93 09:05	18	6	HARD, (2.5Y, 5/3) LIGHT OLIVE BROWN, SILTY CLAY WITH SOME (5Y, 6/1) GRAY, SILTY CLAY, GRAVEL, LOW PLASTICITY, DRY	CL	4.25	PID=0.6 ppm BΓ=20-30 cpm
12.0 12.5	111920	04/19/93 15:50	12	6	SAA	CL	1.0	PID=0.6 ppm BΓ=30-40 cpm

NOTES:
BACKGROUND: HNU=0.6PPM,BETA GAMMA=20-40CPM

Driller: D SMITH
Drilling Equipment: MOBILE B-80

SAA = Same as Above
PID = Photoionization Detector
N/A = Not Applicable

0376

PROJECT NUMBER: 20.03.05	PROJECT NAME: CRU2 RI PHASE II FIELD INVESTIGATION	
BORING NUMBER: 1999	COORDINATES: NORTH 478059.27 EAST 1379040.99	DATE:19-APR-93
GROUND ELEVATION: 569.1	GWL: Depth Date/Time	DATE STARTED: 19-APR-93
ENGINEER/GEOLOGIST: A COMO	Depth Date/Time	DATE COMPLETE: 19-APR-93
DRILLING METHOD: HOLLOW STEM AUGER		

DEPTH	SAMPLE	DATE TIME	BLOWS ON	SAMPLE	RECOVERY	INCHES		USCS SYMBOL	TSF	REMARKS
12.5 13.0	111921	04/19/93 15:50	9		6		SAA	CL	1.0	PID=0.6 ppm BI=30-40 cpm
13.0 13.5		04/19/93 00:00	13		0		NO RECOVERY	N/A	N/A	

NOTES:
BACKGROUND: HNU=0.6PPM,BETA GAMMA=20-40CPM

Driller: D SMITH
Drilling Equipment: MOBILE B-80

SAA = Same as Above
PID = Photoionization Detector
N/A = Not Applicable

0377

5174

PROJECT NUMBER: 20.03.05	PROJECT NAME: CRU2 RI PHASE II FIELD INVESTIGATION	
BORING NUMBER: 11000	COORDINATES: NORTH 478127.21 EAST 1379037.09	DATE:13-APR-93
GROUND ELEVATION: 571.9	GWL: Depth Date/Time	DATE STARTED: 13-APR-93
ENGINEER/GEOLOGIST: A COMO	Depth Date/Time	DATE COMPLETE: 15-APR-93
DRILLING METHOD: AUGER		

DEPTH	SAMPLE	DATE TIME	BLOWS ON SAMPLE	RECOVERY INCHES		USCS SYMBOL	TSF	REMARKS
.5	111732	04/13/93 15:30	6	6	VERY STIFF, (2.5Y5/4) LIGHT OLIVE BROWN, SILTY CLAY, SOME SMALL GRAVEL, SOME BLACK ASH, LOW PLASTICITY, DRY	CL	2.5	PID=0 ppm BΓ=40-50 cpm
.5 1.0	111733	04/13/93 15:30	6	6	SAA	CL	3	PID=0 ppm BΓ=40-50 cpm
1.0 1.5		04/13/93 15:30	8	0	NO RECOVERY	N/A	N/A	
1.5 2.0	111734	04/13/93 15:35	9	6	BLACK ASH, DRY	N/A	N/A	PID=0 ppm BΓ=40-50 cpm
2.0 2.5	111735	04/13/93 15:35	12	6	SAA	N/A	N/A	PID=0 ppm BΓ=40-50 cpm
2.5 3.0		04/13/93 15:35	13	0	NO RECOVERY	N/A	N/A	
3.0 3.5	111736	04/13/93 15:40	15	6	BLACK ASH, DRY	N/A	N/A	PID=0 ppm BΓ=40-50 cpm
3.5 4.0	111737	04/13/93 15:40	18	6	SAA	N/A	N/A	PID=0 ppm BΓ=40-50 cpm
4.0 4.5	111738	04/13/93 15:40	21	6	SAA	N/A	N/A	PID=0 ppm BΓ=40-50 cpm
4.5 5.0	111739	04/13/93 15:45	6	6	SAA	N/A	N/A	PID=0 ppm BΓ=40-50 cpm
5.0 5.5	111740	04/13/93 15:45	6	6	BLACK ASH, DRY	N/A	N/A	PID=0 ppm BΓ=40-50 cpm
5.5 6.0	111741	04/13/93 15:45	8	6	SAA	N/A	N/A	PID=0 ppm BΓ=40-50 cpm
6.0 6.5	111742	04/13/93 15:50	7	6	SAA	N/A	N/A	PID=0 ppm BΓ=90-100 cpm

NOTES:

Boring Contractor: PENNSYLVANIA DRILLING
Driller: DON SMITH
Drilling Equipment: MOBILE B-80

SAA = Same as Above
PID = Photoionization Detector
N/A = Not Applicable

0378

PROJECT NUMBER: 2. 5.05	PROJECT NAME: CRU2 RI PHASE II FIELD INVESTIGATION	
BORING NUMBER: 11000	COORDINATES: NORTH 478127.21 EAST 1379037.09	DATE:13-APR-93
GROUND ELEVATION: 571.9	GWL: Depth Date/Time	DATE STARTED: 13-APR-93
ENGINEER/GEOLOGIST: A COMO	Depth Date/Time	DATE COMPLETE: 15-APR-93
DRILLING METHOD: AUGER		

DEPTH	SAMPLE	DATE TIME	BLOWS ON SAMPLE	RECOVERY INCHES		USCS SYMBOL	TSF	REMARKS
6.5 7.0	111743 04/13/93 15:50		10	6	VERY STIFF, (2.5Y,5/6) LIGHT OLIVE BROWN SILTY CLAY, SOME GRAVEL, LOW PLASTICITY, DRY	CL	2.25	PID=0 ppm BΓ=90-100 cpm
7.0 7.5		04/13/93 15:50	11	0	NO RECOVERY	N/A	N/A	
7.5 8.0	111744 04/13/93 15:55		10	6	BLACK ASH, DRY	N/A	N/A	PID=0 ppm BΓ=40-50 cpm
8.0 8.5	111745 04/13/93 15:55		12	6	VERY STIFF, (2.5Y6/8) OLIVE YELLOW SILTY CLAY, LOW PLASTICITY, DRY	CL	3	PID=0 ppm BΓ=40-50 cpm
8.5 9.0	111746 04/13/93 15:55		16	6	SAA	CL	3	PID=0 ppm BΓ=40-50 cpm
9.0 9.5	111747 04/13/93 16:00		8	6	BLACK ASH, SOME GRAVEL, MOIST	N/A	N/A	PID=0 ppm BΓ=90-100 cpm
9.5 10.0	111748 04/13/93 16:00		8	6	VERY STIFF, (2.5Y6/8) OLIVE YELLOW AND (5Y6/1) GRAY SILTY CLAY, INTERBEDDED, LOW PLASTICITY, DRY	CL	3	PID=0 ppm BΓ=90-100 cpm
10.0 10.5	111749 04/13/93 16:00		12	6	VERY STIFF, (2.5Y6/8) OLIVE YELLOW AND (5Y6/1) GRAY SILTY CLAY, INTERBEDDED, LOW PLASTICITY, DRY	CL	3	PID=0 ppm BΓ=90-100 cpm
10.5 11.0	111750 04/13/93 16:10		6	6	VERY STIFF, (2.5Y, 5/6) SILTY CLAY, SOME SAND, LOW PLASTICITY, DRY	CL	3.75	PID=0 ppm BΓ=90-100 cpm
11.0 11.5	111751 04/13/93 16:10		8	6	STIFF SAA	CL	1.5	PID=0 ppm BΓ=90-100 cpm
11.5 12.0	111752 04/13/93 16:10		7	6	MEDIUM DENSE, (2.5Y6/4) LIGHT YELLOWISH BROWN, (5Y6/1) CLAYEY SILT, LOW PLASTICITY, MOIST	ML	N/A	PID=0 ppm BΓ=90-100 cpm
12.0 12.5	111753 04/13/93 16:15		2	6	MEDIUM DENSE, (2.5Y4/0) DARK GRAY CLAYEY SILT, SOME GRAVEL, TRACE BLACK ASH, LOW PLASTICITY, WET	ML	N/A	PID=0 ppm BΓ=40-50 cpm
12.5 13.0	111754 04/13/93 16:15		4	6	MEDIUM DENSE, (2.5Y6/6) OLIVE YELLOW SILTY SAND, NO PLASTICITY, WET	SM	N/A	PID=0 ppm BΓ=40-50 cpm

NOTES:

Boring Contractor: PENNSYLVANIA DRILLING
Driller: DON SMITH
Drilling Equipment: MOBILE B-80

SAA = Same as Above
PID = Photoionization Detector
N/A = Not Applicable

0379

PROJECT NUMBER: 20.03.05	PROJECT NAME: CRU2 RI PHASE II FIELD INVESTIGATION	
BORING NUMBER: 11000	COORDINATES: NORTH 478127.21 EAST 1379037.09	DATE:13-APR-93
GROUND ELEVATION: 571.9	GWL: Depth Date/Time	DATE STARTED: 13-APR-93
ENGINEER/GEOLOGIST: A COMO	Depth Date/Time	DATE COMPLETE: 15-APR-93
DRILLING METHOD: AUGER		

DEPTH	SAMPLE	DATE TIME	BLOWS ON SAMPLE	RECOVERY INCHES		USCS SYMBOL	TSF	REMARKS
13.0 13.5	111755 04/13/93 16:15		9	6	SAA	SM	N/A	PID=0 ppm BΓ=40-50 cpm
13.5 14.0	111756 04/13/93 16:35		6	6	STIFF, (2.5Y5/6) LIGHT OLIVE BROWN SILTY CLAY, SOME GRAVEL, LOW PLASTICITY, WET	CL	1	PID=0 ppm BΓ=40-50 cpm
14.0 14.5	111757 04/13/93 16:35		5	6	MEDIUM DENSE, (2.5Y6/8) OLIVE YELLOW SILTY SAND, NO PLASTICITY, WET	SM	N/A	PID=0 ppm BΓ=40-50 cpm
14.5 15.0	111758 04/13/93 16:35		8	6	MEDIUM DENSE, (10YR6/1) GRAY CLAYEY SILT, SOME GRAVEL, LOW PLASTICITY, DRY	ML	N/A	PID=0 ppm BΓ=40-50 cpm
15.0 15.5	111760 04/15/93 09:15		6	6	VERY STIFF, (2.5Y6/8) OLIVE YELLOW SILTY CLAY, LOW PLASTICITY, DRY, SOME GRAVEL	CL	2.5	PID=0 ppm BΓ=50-60 cpm
15.5 16.0	111761 04/15/93 09:15		7	6	SAA	CL	N/A	PID=0 ppm BΓ=50-60 cpm
16.0 16.5	04/15/93 09:15		8	0	NO RECOVERY	N/A	N/A	
16.5 17.0	111762 04/15/93 09:40		17	6	MEDIUM DENSE, (5Y5/1) GRAY CLAYEY SILT, SOME SAND, LOW PLASTICITY, DRY	ML	N/A	PID=0 ppm BΓ=40-50 cpm
17.0 17.5	111763 04/15/93 09:40		12	6	SAA, NO PLASTICITY	ML	N/A	PID=0 ppm BΓ=40-50 cpm
17.5 18.0	111764 04/15/93 09:40		18	6	SAA, NO PLASTICITY	ML	N/A	PID=0 ppm BΓ=40-50 cpm

NOTES:

Boring Contractor: PENNSYLVANIA DRILLING
Driller: DON SMITH
Drilling Equipment: MOBILE B-80

SAA = Same as Above
PID = Photoionization Detector
N/A = Not Applicable

0380

PROJECT NUMBER: 20.03.05	PROJECT NAME: CRU2 RI PHASE II FIELD INVESTIGATION	
BORING NUMBER: 11001	COORDINATES: NORTH 478192.51 EAST 1379015.70	DATE:12-APR-93
GROUND ELEVATION: 573.6	GWL: Depth Date/Time	DATE STARTED: 12-APR-93
ENGINEER/GEOLOGIST: A COMO	Depth Date/Time	DATE COMPLETE: 13-APR-93
DRILLING METHOD: HOLLOW STEM AUGER		

DEPTH	SAMPLE	DATE TIME	BLOWS ON SAMPLE	RECOVERY INCHES		USCS SYMBOL	TSF	REMARKS
.5	111691	04/12/93 15:30	3	6	VERY STIFF, (2.5Y,4/4) OLIVE BROWN, SILTY CLAY, SOME BLACK ASH, SMALL GRAVEL, LOW PLASTISCITY, DRY	CL	3.5	PID=0 ppm BΓ=50-60 cpm
.5 1.0	111692	04/12/93 15:30	7	4	SAA	CL	4	PID=0 ppm BΓ=50-60 cpm
1.0 1.5		04/12/93 15:30	12	0	NO RECOVERY	N/A	N/A	
1.5 2.0	111693	04/12/93 15:35	8	6	VERY STIFF, (2.5Y,5/4) LIGHT OLIVE BROWN, SILTY CLAY, SOME BLACK ASH, SMALL GRAVEL, LOW PLASTICITY, DRY	CL	3.5	PID=0 ppm BΓ=90-100 cpm
2.0 2.5	111694	04/12/93 15:35	9	6	SAA	CL	2	PID=0 ppm BΓ=90-100 cpm
2.5 3.0	111694	04/12/93 15:35	12	0	NO RECOVERY	N/A	N/A	
3.0 3.5	111695	04/12/93 15:40	3	6	STIFF, (2.5Y,5/4) LIGHT OLIVE BROWN, SILTY CLAY WITH BLACK ASH, SMALL GRAVEL, LOW PLASTICITY, DRY	CL	1	PID=0 ppm BΓ=40-50 cpm
3.5 4.0	111696	04/12/93 15:40	6	6	BLACK ASH, DRY	N/A	N/A	PID=0 ppm BΓ=40-50 cpm
4.0 4.5	111697	04/12/93 15:40	5	2	BLACK ASH, DRY	N/A	N/A	PID=0 ppm BΓ=40-50 cpm
4.5 5.0	111698	04/12/93 15:45	7	6	VERY STIFF, (2.5Y,4/4) OLIVE BROWN, SILTY CLAY, SOME SMALL GRAVEL, SOME BLACK ASH, MEDIUM PLASTICITY, DRY	CL	2.5	PID=0 ppm BΓ=40-50 cpm
5.0 5.5	111699	04/12/93 15:45	8	6	BLACK ASH, DRY	N/A	N/A	PID=0 ppm BΓ=40-50 cpm
5.5 6.0		04/12/93 15:45	9	0	NO RECOVERY	N/A	N/A	
6.0 6.5	111700	04/12/93 16:10	2	6	BLACK ASH, DRY	N/A	N/A	PID=0 ppm BΓ=40-50 cpm

NOTES:
From 0' to 15' Background: Hnu = 0 ppm, Beta Gamma = 50 cpm. From 15' to 22.5' Background: Hnu = 0 ppm, Beta Gamma = 10-20 cpm.

Boring Contractor: PENNSYLVANIA DRILLING
Driller: D SMITH, S SMITH
Drilling Equipment: MOBILE B-80

SAA = Same as Above
PID = Photoionization Detector
N/A = Not Applicable

0381

PROJECT NUMBER: 20.03.05	PROJECT NAME: CRU2 RI PHASE II FIELD INVESTIGATION	
BORING NUMBER: 11001	COORDINATES: NORTH 478192.51 EAST 1379015.70	DATE:12-APR-93
GROUND ELEVATION: 573.6	GWL: Depth Date/Time	DATE STARTED: 12-APR-93
ENGINEER/GEOLOGIST: A COMO	Depth Date/Time	DATE COMPLETE: 13-APR-93
DRILLING METHOD: HOLLOW STEM AUGER		

DEPTH	SAMPLE DATE TIME	BLOWS ON SAMPLE	RECOVERY INCHES		USCS SYMBOL	TSF	REMARKS
6.5 7.0	111701 04/12/93 16:10	4	6	BLACK ASH, DRY	N/A	N/A	PID=0 ppm BΓ=40-50 cpm
7.0 7.5	111702 04/12/93 16:10	12	6	VERY STIFF, (2.5Y,5/2) GRAYISH BROWN, SILTY CLAY, SOME GRAVEL, SOME BLACK,ASH, LOW PLASTICITY, DRY	CL	3.25	PID=0 ppm BΓ=40-50 cpm
7.5 8.0	111703 04/12/93 16:15	2	6	STIFF,SAA	CL	1	PID=0 ppm BΓ=50-60 cpm
8.0 8.5	111704 04/12/93 16:15	4	6	BLACK ASH, DRY	N/A	N/A	PID=0 ppm BΓ=50-60 cpm
8.5 9.0	111705 04/12/93 16:15	12	6	VERY STIFF, (2.5Y, 6/8) OLIVE YELLOW, SILTY CLAY, SOME BLACK ASH, LOW PLASTICITY, DRY	CL	2.75	PID=0 ppm BΓ=50-60 cpm
9.0 9.5	111706 04/12/93 16:20	7	6	VERY STIFF, (2.5Y,6/8) OLIVE YELLOW, SILTY CLAY, BLACK ASH, LOW PLASTICITY, DRY	CL	2.5	PID=0 ppm BΓ=40-50 cpm
9.5 10.0	111707 04/12/93 16:20	9	6	VERY STIFF, (2.5Y,5/4) LIGHT OLIVE BROWN, SILTY CLAY, MEDIUM PLASTICITY, MOIST	CL	2.5	PID=0 ppm BΓ=40-50 cpm
10.0 10.5	111708 04/12/93 16:20	9	6	VERY STIFF, (2.5Y,5/4) LIGHT OLIVE BROWN, SILTY CLAY, MEDIUM PLASTICITY, MOIST	CL	2.5	PID=0 ppm BΓ=40-50 cpm
10.5 11.0	111709 04/12/93 16:25	7	6	SAA	CL	2	PID=0 ppm BΓ=40-50 cpm
11.0 11.5	111710 04/12/93 16:25	12	6	STIFF, (2.5Y,5/4) LIGHT OLIVE BROWN, SILTY CLAY, LOW PLASTICITY, MOIST	CL	2	PID=0 ppm BΓ=40-50 cpm
11.5 12.0	111711 04/12/93 16:25	15	6	STIFF, (2.5Y,6/0) GRAY, SILTY CLAY, MEDIUM PLASTICITY, MOIST	CL	1	PID=0 ppm BΓ=40-50 cpm
12.0 12.5	111712 04/12/93 16:35	4	6	STIFF, SAA	CL	1.25	PID=0 ppm BΓ=50-60 cpm
12.5 13.0	111713 04/12/93 16:35	4	6	LOOSE, (2.5Y,6/0) GRAY, SANDY SILT, SOME CLAY, LOW PLASTICITY, WET	ML	N/A	PID=0 ppm BΓ=50-60 cpm

NOTES:
From 0' to 15' Background: Hnu = 0 ppm, Beta Gamma = 50 cpm. From 15' to 22.5' Background: Hnu = 0 ppm, Beta Gamma = 10-20 cpm.

Boring Contractor: PENNSYLVANIA DRILLING
Driller: D SMITH, S SMITH
Drilling Equipment: MOBILE B-80

SAA = Same as Above
PID = Photoionization Detector
N/A = Not Applicable

0382

PROJECT NUMBER: 20.03.05	PROJECT NAME: CRU2 RI PHASE II FIELD INVESTIGATION	
BORING NUMBER: 11001	COORDINATES: NORTH 478192.51 EAST 1379015.70	DATE:12-APR-93
GROUND ELEVATION: 573.6	GWL: Depth Date/Time	DATE STARTED: 12-APR-93
ENGINEER/GEOLOGIST: A COMO	Depth Date/Time	DATE COMPLETE: 13-APR-93
DRILLING METHOD: HOLLOW STEM AUGER		

DEPTH	SAMPLE	DATE TIME	BLOWS ON SAMPLE	RECOVERY INCHES		USCS SYMBOL	TSF	REMARKS
13.0 13.5	111714 04/12/93 16:35		5	6	SAA	ML	N/A	PID=0 ppm BΓ=50-60 cpm
13.5 14.0	111715 04/13/93 08:30		6	6	STIFF, (2.5Y,5/4) LIGHT OLIVE BROWN, SILTY CLAY, SOME SAND, SOME BLACK ASH, MEDIUM PLASTICITY, MOIST	CL	1.25	PID=0 ppm BΓ=10-20 cpm
14.0 14.5	111716 04/13/93 08:30		8	6	SAA	CL	1.75	PID=0 ppm BΓ=10-20 cpm
14.5 15.0	111717 04/13/93 09:30		12	6	MEDIUM DENSE, (2.5Y,6/4) LIGHT YELLOWISH BROWN, SANDY SILT, SOME CLAY, LOW PLASTICITY, MOIST	ML	N/A	PID=0 ppm BΓ=10-20 cpm
15.0 15.5	111718 04/13/93 08:35		4	6	STIFF, (2.5Y,6/6) OLIVE YELLOW, CLAY, SOME, BLACK ASH, HIGH PLASTICITY, MOIST	CL	1	PID=0 ppm BΓ=10-20 cpm
15.5 16.0	111719 04/13/93 08:35		6	6	STIFF, SAA	CL	1.5	PID=0 ppm BΓ=10-20 cpm
16.0 16.5	111720 04/13/93 08:35		12	4	MEDIUM DENSE, (2.5Y,6/8) OLIVE YELLOW, SANDY SILT, SOME GRAVEL, LOW PLASTICITY, WET	ML	N/A	PID=0 ppm BΓ=10-20 cpm
16.5 17.0	111721 04/13/93 08:40		12	6	MEDIUM DENSE, (2.5Y,5/6) LIGHT OLIVE BROWN, SILT SMALL GRAVEL, MOIST	ML	N/A	PID=0 ppm BΓ=10-20 cpm
17.0 17.5	111722 04/13/93 08:40		13	6	MEDIUM DENSE, (5Y,5/1) GRAY, SANDY SILT, SOME GRAVEL, DRY	ML	N/A	PID=0 ppm BΓ=10-20 cpm
17.5 18.0	111723 04/13/93 08:40		13	6	SAA	ML	N/A	PID=0 ppm BΓ=10-20 cpm
18.0 18.5	111724 04/13/93 08:50		6	6	MEDIUM DENSE, (2.5Y,6/4) LIGHT YELLOW BROWN, SANDY SILT, SOME CLAY, LOW PLASTICITY, WET	ML	N/A	PID=0 ppm BΓ=10-20 cpm
18.5 19.0	111725 04/13/93 08:50		8	6	MEDIUM DENSE, (5Y,6/1) GRAY, SILT, SOME GRAVEL, NO PLASTICITY, MOIST	ML	N/A	PID=0 ppm BΓ=10-20 cpm
19.0 19.5	111726 04/13/93 08:50		12	6	SAA, DRY	ML	N/A	PID=0 ppm BΓ=10-20 cpm

NOTES:
From 0' to 15' Background: Hnu = 0 ppm, Beta Gamma = 50 cpm. From 15' to 22.5' Background: Hnu = 0 ppm, Beta Gamma = 10-20 cpm.

Boring Contractor: PENNSYLVANIA DRILLING
Driller: D SMITH, S SMITH
Drilling Equipment: MOBILE B-80

SAA = Same as Above
PID = Photoionization Detector
N/A = Not Applicable

0383

PROJECT NUMBER: 20.03.05	PROJECT NAME: CRU2 RI PHASE II FIELD INVESTIGATION	
BORING NUMBER: 11001	COORDINATES: NORTH 478192.51 EAST 1379015.70	DATE:12-APR-93
GROUND ELEVATION: 573.6	GWL: Depth Date/Time	DATE STARTED: 12-APR-93
ENGINEER/GEOLOGIST: A COMO	Depth Date/Time	DATE COMPLETE: 13-APR-93
DRILLING METHOD: HOLLOW STEM AUGER		

DEPTH	SAMPLE	DATE TIME	BLOWS ON SAMPLE	RECOVERY INCHES		USCS SYMBOL	TSF	REMARKS
19.5 20.0	111727	04/13/93 09:10	13	6	SAA, WET	ML	N/A	PID=0 ppm βΓ=10-20 cpm
20.0 20.5	111728	04/13/93 09:10	12	6	(20.0' - 20.3') SAA, MEDIUM DENSE, (5Y,4/1) DARK GRAY, SAND, WET	ML	N/A	PID=0 ppm βΓ=10-20 cpm
20.5 21.0	111729	04/13/93 09:10	15	6	MEDIUM DENSE, (5Y,4/1) DARK GRAY, SILT, DRY	ML	N/A	PID=0 ppm βΓ=10-20 cpm
21.0 21.5	111730	04/13/93 10:05	12	6	SAA	ML	N/A	PID=0 ppm βΓ=10-20 cpm
21.5 22.0	111731	04/13/93 10:05	12	6	SAA	ML	N/A	PID=0 ppm βΓ=10-20 cpm
22.0 22.5		04/13/93 10:05	10	0	NO RECOVERY	N/A	N/A	

NOTES:
From 0' to 15' Background: Hnu = 0 ppm, Beta Gamma = 50 cpm. From 15' to 22.5' Background: Hnu = 0 ppm, Beta Gamma = 10-20 cpm.

Boring Contractor: PENNSYLVANIA DRILLING
Driller: D SMITH, S SMITH
Drilling Equipment: MOBILE B-80

SAA = Same as Above
PID = Photoionization Detector
N/A = Not Applicable

0384

PROJECT NUMBER: 0.03.05	PROJECT NAME: CRU2 RI PHASE II FIELD INVESTIGATION	
BORING NUMBER: 11002	COORDINATES: NORTH 478192.94 EAST 1378962.84	DATE:05-MAY-93
GROUND ELEVATION: 568.5	GWL: Depth Date/Time	DATE STARTED: 05-MAY-93
ENGINEER/GEOLOGIST: D O'BRIEN	Depth Date/Time	DATE COMPLETE: 05-MAY-93
DRILLING METHOD: HOLLOW STEM AUGER		

DEPTH	SAMPLE	DATE TIME	BLOWS ON	SAMPLE	RECOVERY	INCHES		USCS SYMBOL	TSF	REMARKS
.5	116156	05/05/93 09:50	3		6		VERY STIFF, (2.5Y5/4) LIGHT OLIVE BROWN, GRAVELLY CLAY, NO PLASTICITY, MOIST	CL	2.25	PID=0 ppm BΓ=60 cpm
.5 1.0	116157	05/05/93 09:50	5		6		SAA,DRY	CL	3.25	PID=0 ppm BΓ=60 cpm
1.0 1.5		05/05/93 09:50	7		0		NO RECOVERY	N/A	N/A	
1.5 2.0	116158	05/05/93 09:55	4		6		VERY STIFF, (2.5Y5/4) LIGHT OLIVE BROWN, GRAVELLY CLAY, NO PLASTICITY, DRY	CL	3	PID=0 ppm BΓ=60 cpm
2.0 2.5	116159	05/05/93 09:55	6		4		SAA, MIXED WITH BLACK FLYASH, MOIST	CL	2.5	PID=0 ppm BΓ=60 cpm
2.5 3.0		05/05/93 09:55	8		0		NO RECOVERY	N/A	N/A	
3.0 3.5	116160	05/05/93 10:00	3		6		MEDIUM DENSE, BLACK FLYASH, WET	N/A	N/A	PID=0 ppm BΓ=100 cpm
3.5 4.0	116161	05/05/93 10:00	6		5		SAA; AND VERY STIFF, (2.5Y, 5/4) LIGHT OLIVE BROWN, GRAVELLY CLAY, NO PLASTICITY, SLIGHTLY MOIST	N/A CL	N/A 2.2	PID=0 ppm BΓ=100 cpm
4.0 4.5		05/05/93 10:00	7		0		NO RECOVERY	N/A	N/A	
4.5 5.0	116162	05/05/93 10:00	7		6		STIFF, (2.5Y5/6) LIGHT OLIVE BROWN, GRAVELLY CLAY, NO PLASTICITY, SLIGHTLY MOIST	CL	1.75	PID=0 ppm BΓ=60 cpm
5.0 5.5	116163	05/05/93 10:05	9		6		SAA	CL	2	PID=0 ppm BΓ=60 cpm
5.5 6.0		05/05/93 10:05	11		0		NO RECOVERY	N/A	N/A	
6.0 6.5	116164	05/05/93 10:30	11		6		VERY STIFF, (2.5Y5/2) GRAYISH BROWN, SILTY CLAY WITH ORGANICS, NO PLASTICITY, DRY	CL	3	PID=0 ppm BΓ=60 cpm

NOTES:

Boring Contractor: PENNSYLVANIA DRILLING
Driller: CRAIG CAULTER,BOBBY YOST
Drilling Equipment: ACKER SENTRY

SAA = Same as Above
PID = Photoionization Detector
N/A = Not Applicable

0385

PROJECT NUMBER: 20.03.05	PROJECT NAME: CRU2 RI PHASE II FIELD INVESTIGATION	
BORING NUMBER: 11002	COORDINATES: NORTH 478192.94 EAST 1378962.84	DATE:05-MAY-93
GROUND ELEVATION: 568.5	GWL: Depth Date/Time	DATE STARTED: 05-MAY-93
ENGINEER/GEOLOGIST: D O'BRIEN	Depth Date/Time	DATE COMPLETE: 05-MAY-93
DRILLING METHOD: HOLLOW STEM AUGER		

DEPTH	SAMPLE	DATE TIME	BLOWS ON SAMPLE	RECOVERY INCHES		USCS SYMBOL	T' S F.	REMARKS
6.5 7.0	116165 05/05/93 10:30	14	3	SAA		CL	3	PID=0 ppm BΓ=60 cpm
7.0 7.5	05/05/93 10:30	21	0	NO RECOVERY		N/A	N/A	
7.5 8.0	116166 05/05/93 10:40	9	6	VERY STIFF, (2.5Y5/6) LIGHT OLIVE BROWN, SILTY CLAY WITH ORGANICS, NO PLASTICITY, DRY		CL	3.25	PID=0 ppm BΓ=80 cpm
8.0 8.5	116167 05/05/93 10:40	10	6	SAA, (2.5Y4/4) OLIVE BROWN		CL	3	PID=0 ppm BΓ=80 cpm
8.5 9.0	116168 05/05/93 10:40	16	3	STIFF, (2.5Y4/4) OLIVE BROWN, SILTY CLAY WITH ORGANICS, LOW PLASTICITY, MOIST		CL	1.5	PID=0 ppm BΓ=80 cpm
9.0 9.5	116463 05/05/93 10:42	6	6	STIFF, (2.4Y5/1) GRAY SILTY CLAY WITH ORGANICS, LOW PLASTICITY, SLIGHTLY MOIST		CL	1.25	PID=0 ppm BΓ=60 cpm
9.5 10.0	116464 05/05/93 10:42	8	4	SAA		CL	1.5	PID=0 ppm BΓ=60 cpm
10.0 10.5	05/05/93 10:42	10	0	NO RECOVERY		N/A	N/A	
10.5 11.0	116465 05/05/93 10:45	9	5	STIFF, (2.5Y4/1) DARK GRAY SILTY CLAY, LITTLE GRAVEL, LOW PLASTICTIY, SLIGHTLY MOIST		CL	1.25	PID=0 ppm BΓ=60 cpm
11.0 11.5	05/05/93 10:45	11	0	NO RECOVERY		N/A	N/A	
11.5 12.0	05/05/93 10:45	21	0	NO RECOVERY		N/A	N/A	
12.0 12.5	116466 05/05/93 10:50	2	6	STIFF, (2.5Y4/1) DARK GRAY SILTY CLAY, LOW PLASTICITY, MOIST		CL	1.5	PID=0 ppm BΓ=100 cpm
12.5 13.0	116467 05/05/93 10:50	4	3	STIFF, (2.5Y4/1) DARK GRAY MIXED WITH LIGHT OLIVE BROWN GRAVELLY CLAY, NO PLASTICITY, WET		CL	1	PID=0 ppm BΓ=100 cpm

NOTES:

Boring Contractor: PENNSYLVANIA DRILLING
Driller: CRAIG CAULTER,BOBBY YOST
Drilling Equipment: ACKER SENTRY

SAA = Same as Above
PID = Photoionization Detector
N/A = Not Applicable

0386

PROJECT NUMBER: 20.03.05	PROJECT NAME: CRU2 RI PHASE II FIELD INVESTIGATION	
BORING NUMBER: 11002	COORDINATES: NORTH 478192.94 EAST 1378962.84	DATE:05-MAY-93
GROUND ELEVATION: 568.5	GWL: Depth Date/Time	DATE STARTED: 05-MAY-93
ENGINEER/GEOLOGIST: D O'BRIEN	Depth Date/Time	DATE COMPLETE: 05-MAY-93
DRILLING METHOD: HOLLOW STEM AUGER		

DEPTH	SAMPLE	DATE TIME	BLOWS ON SAMPLE	RECOVERY INCHES		USCS SYMBOL	TSF	REMARKS
13.0 15.0		05/05/93 10:50	5 15 15 20	0	NO RECOVERY	N/A	N/A	
15.0 15.5	116468	05/05/93 12:45	10	6	STIFF, (2.5Y5/1)GRAY CLAY WITH GRAVEL, LOW PLASTICITY, WET ON TOP DRY AT THE END	CL	1.5	PID=0 ppm BT=60 cpm
15.5 16.5		05/05/93 12:45	50	0	NO RECOVERY	N/A	N/A	
16.5 17.0	116462	05/05/93 13:20	15	5	VERY STIFF, (2.5Y5/1) GRAY GRAVELLY CLAY, NO PLASTICITY, DRY; AND DENSE, (2.5Y, 5/6) LIGHT OLIVE BROWN, COARSE SAND, POORLY GRADED, MOIST	CL SP	3.5	PID=0 ppm BT=60 cpm
17.0 18.0		05/05/93 13:20	20 25	0	NO RECOVERY	N/A	N/A	

NOTES:

Boring Contractor: PENNSYLVANIA DRILLING
Driller: CRAIG CAULTER,BOBBY YOST
Drilling Equipment: ACKER SENTRY

SAA = Same as Above
PID = Photoionization Detector
N/A = Not Applicable

C387

PROJECT NUMBER: 20.03.05	PROJECT NAME: CRU2 RI PHASE II FIELD INVESTIGATION	
BORING NUMBER: 11003	COORDINATES: NORTH 478133.16 EAST 1378957.89	DATE:16-APR-93
GROUND ELEVATION: 577.3	GWL: Depth Date/Time	DATE STARTED: 16-APR-93
ENGINEER/GEOLOGIST: A COMO	Depth Date/Time	DATE COMPLETE: 17-APR-93
DRILLING METHOD: AUGER		

DEPTH	SAMPLE	DATE TIME	BLOWS ON SAMPLE	RECOVERY INCHES		USCS SYMBOL	TSF	REMARKS
.5	111765	04/16/93 08:20	5	6	STIFF, (2.5Y5/4) LIGHT OLIVE BROWN SILTY CLAY, LOW PLASTICITY, MOIST	CL	2	PID=0 ppm BΓ=40-50 cpm
.5 1.0	111766	04/16/93 08:20	10	6	MEDIUM DENSE, (2.5YR2.5/0) BLACK GRITTY, SILT-LIKE MATERIAL(BLACK ASH), DRY	N/A	N/A	PID=0 ppm BΓ=40-50 cpm
1.0 1.5		04/16/93 08:20	9	0	NO RECOVERY	N/A	N/A	
1.5 2.0	111767	04/16/93 08:25	5	6	MEDIUM DENSE, (2.5YR2.5/0) BLACK GRITTY, SILT-LIKE MATERIAL (BLACK ASH), DRY	N/A	N/A	PID=0 ppm BΓ=40-50 cpm
2.0 2.5	111768	04/16/93 08:25	6	6	SAA	N/A	N/A	PID=0 ppm BΓ=40-50 cpm
2.5 3.0	111769	04/16/93 08:25	8	6	SAA	N/A	N/A	PID=0 ppm BΓ=40-50 cpm
3.0 3.5	111770	04/16/93 08:30	12	6	SAA	N/A	N/A	PID=0 ppm BΓ=80-90 cpm
3.5 4.0	111771	04/16/93 08:30	11	6	SAA	N/A	N/A	PID=0 ppm BΓ=80-90 cpm
4.0 4.5		04/16/93 08:30	7	0	NO RECOVERY	N/A	N/A	
4.5 5.0	111772	04/16/93 08:35	12	6	MEDIUM DENSE, (2.5YR2.5/0) BLACK GRITTY, SILT-LIKE MATERIAL (BLACK ASH), DRY	N/A	N/A	PID=0 ppm BΓ=40-50 cpm
5.0 5.5	111773	04/16/93 08:35	11	6	MEDIUM DENSE, (2.5YR 2.5/0) BLACK GRITTY SILT-LIKE MATERIAL (BLACK ASH), DRY	N/A	N/A	PID=0 ppm BΓ=40-50 cpm
5.5 6.0	111774	04/16/93 08:35	12	3	SAA	N/A	N/A	PID=0 ppm BΓ=40-50 cpm
6.0 6.5	111775	04/16/93 08:40	7	6	SAA	N/A	N/A	PID=0 ppm BΓ=40-50 cpm

NOTES:

Driller: D SMITH
Drilling Equipment: MOBILE B-80

SAA = Same as Above
PID = Photoionization Detector
N/A = Not Applicable

0388

5174

PROJECT NUMBER: 20.03.05	PROJECT NAME: CRU2 RI PHASE II FIELD INVESTIGATION	
BORING NUMBER: 11003	COORDINATES: NORTH 478133.16 EAST 1378957.89	DATE:16-APR-93
GROUND ELEVATION: 577.3	GWL: Depth Date/Time	DATE STARTED: 16-APR-93
ENGINEER/GEOLOGIST: A COMO	Depth Date/Time	DATE COMPLETE: 17-APR-93
DRILLING METHOD: AUGER		

DEPTH	SAMPLE	DATE TIME	BLOWS ON SAMPLE	RECOVERY INCHES		USCS SYMBOL	TSF	REMARKS
6.5 7.0	111776	04/16/93 08:40	12	6	SAA	N/A	N/A	PID=0 ppm βΓ=40-50 cpm
7.0 7.5		04/16/93 08:40	10	0	NO RECOVERY	N/A	N/A	
7.5 8.0	111777	04/16/93 08:45	6	6	MEDIUM DENSE, (2.5YR2.5/0) BLACK GRITTY SILT-LIKE MATERIAL (BLACK ASH), DRY	N/A	N/A	PID=0 ppm βΓ=40-50 cpm
8.0 8.5	111778	04/16/93 08:45	6	6	SAA	N/A	N/A	PID=0 ppm βΓ=40-50 cpm
8.5 9.0	111779	04/16/93 08:45	7	6	SAA	N/A	N/A	PID=0 ppm βΓ=40-50 cpm
9.0 9.5	111780	04/16/93 08:50	8	6	SAA	N/A	N/A	PID=0 ppm βΓ=40-50 cpm
9.5 10.0	111781	04/16/93 08:50	7	6	SAA	N/A	N/A	PID=0 ppm βΓ=40-50 cpm
10.0 10.5	111782	04/16/93 08:50	9	6	MEDIUM DENSE, (2.5YR2.5/0) BLACK GRITTY, SILT-LIKE MATERIAL (BLACK ASH), DRY	N/A	N/A	PID=0 ppm βΓ=40-50 cpm
10.5 11.0	111783	04/16/93 08:55	2	6	SAA	N/A	N/A	PID=0 ppm βΓ=50-60 cpm
11.0 11.5	111784	04/16/93 08:55	4	6	SAA	N/A	N/A	PID=0 ppm βΓ=50-60 cpm
11.5 12.0	111785	04/16/93 08:55	8	6	SAA	N/A	N/A	PID=0 ppm βΓ=50-60 cpm
12.0 12.5	111786	04/16/93 09:25	12	6	SAA, MOIST	N/A	N/A	PID=0 ppm βΓ=50-60 cpm
12.5 13.0	111787	04/16/93 09:25	16	6	SAA WITH SOME (2.5Y5/6) LIGHT OLIVE BROWN, SILTY CLAY	N/A	N/A	PID=0 ppm βΓ=50-60 cpm

NOTES:

Driller: D SMITH
Drilling Equipment: MOBILE B-80

SAA = Same as Above
PID = Photoionization Detector
N/A = Not Applicable

0389

PROJECT NUMBER: 20.03.05	PROJECT NAME: CRU2 RI PHASE II FIELD INVESTIGATION	
BORING NUMBER: 11003	COORDINATES: NORTH 478133.16 EAST 1378957.89	DATE:16-APR-93
GROUND ELEVATION: 577.3	GWL: Depth Date/Time	DATE STARTED: 16-APR-93
ENGINEER/GEOLOGIST: A COMO	Depth Date/Time	DATE COMPLETE: 17-APR-93
DRILLING METHOD: AUGER		

DEPTH	SAMPLE	DATE TIME	BLOWS ON SAMPLE	RECOVERY INCHES		USCS SYMBOL	TSF	REMARKS
13.0 13.5	111788 04/16/93 09:25	4	3	MEDIUM DENSE, (2.5YR2.5/0) BLACK GRITTY, SILT-LIKE MATERIAL (BLACK ASH), MOIST		N/A	N/A	PID=0 ppm BΓ=50-60 cpm
13.5 14.0	111789 04/16/93 09:30	7	6	SAA		N/A	N/A	PID=0 ppm BΓ=50-60 cpm
14.0 14.5	111841 04/16/93 09:30	12	6	STIFF, (5Y4/2) OLIVE GRAY SILTY CLAY, MEDIUM PLASTICITY, SOME BLACK ASH, MOIST		CL	2	PID=0 ppm BΓ=50-60 cpm
14.5 15.0	04/16/93 09:30	16	0	NO RECOVERY		N/A	N/A	
15.0 15.5	111842 04/16/93 09:40	14	6	MEDIUM DENSE, (2.5YR2.5/0) BLACK GRITTY, SILT-LIKE MATERIAL (BLACK ASH), MOIST		N/A	N/A	PID=0 ppm BΓ=80-90 cpm
15.5 16.0	111843 04/16/93 09:40	15	6	STIFF (5Y, 4/2) OLIVE GRAY, SILTY CLAY, LOW PLASTICITY, MOIST		CL	1.75	PID=0 ppm BΓ=90-100 cpm
16.0 16.5	111844 04/16/93 09:40	14	6	SAA		CL	1.75	PID=0 ppm BΓ=80-90 cpm
16.5 17.0	111845 04/16/93 09:55	12	6	SAA, SOME FLYASH		CL	1.75	PID=0 ppm BΓ=1500 cpm
17.0 18.0	04/16/93 09:55	22 27	0	NO RECOVERY		N/A	N/A	
18.0 18.5	111846 04/16/93 13:50	7	6	MEDIUM STIFF, (5Y4/1) DARK GRAY, SILTY CLAY, HIGH PLASTICTY, MOIST		N/A	.75	PID=0 ppm BΓ=600 cpm
18.5 19.5	04/16/93 13:50	8 9	0	NO RECOVERY		N/A	N/A	
19.5 20.0	111847 04/16/93 14:00	8	6	SOFT, (5Y4/1) DARK GRAY, SILTY CLAY, HIGH PLASTICITY, WET		CL	.50	PID=0 ppm BΓ=350 cpm
20.0 20.5	111848 04/16/93 14:00	7	6	MEDIUM STIFF, (5Y4/1) DARK GRAY, SILTY CALY, HIGH PLASTICITY, WET		CL	.75	PID=0 ppm BΓ=350-360 cpm

NOTES:

Driller: D SMITH
Drilling Equipment: MOBILE B-80

SAA = Same as Above
PID = Photoionization Detector
N/A = Not Applicable

0390

5174

PROJECT NUMBER: 20.03.05	PROJECT NAME: CRU2 RI PHASE II FIELD INVESTIGATION	
BORING NUMBER: 11003	COORDINATES: NORTH 478133.16 EAST 1378957.89	DATE:16-APR-93
GROUND ELEVATION: 577.3	GWL: Depth Date/Time	DATE STARTED: 16-APR-93
ENGINEER/GEOLOGIST: A COMO	Depth Date/Time	DATE COMPLETE: 17-APR-93
DRILLING METHOD: AUGER		

DEPTH	SAMPLE	DATE TIME	BLOWS ON SAMPLE	RECOVERY INCHES		USCS SYMBOL	TSF	REMARKS
20.5 21.0		04/16/93 14:00	7	0	NO RECOVERY	N/A	N/A	
21.0 21.5	111849	04/16/93 14:20	10	6	SOFT, (5Y4/1) DARK GRAY, SILTY CLAY, HIGH PLASTICITY, WET	CL	.5	PID=0 ppm BΓ=390-400 cpm
21.5 22.0		04/16/93 14:20	7	0	NO RECOVERY	N/A	N/A	
22.0 22.5		04/16/93 14:20	8	0	NO RECOVERY	N/A	N/A	
22.5 23.0	111850	04/16/93 14:30	12	6	STIFF, (5Y4/1) DARK GRAY, SILTY CLAY, HIGH PLASTICITY, WET	CL	1	PID=0 ppm BΓ=350-360 cpm
23.0 23.5	111851	04/16/93 14:30	17	6	DENSE, (5Y4/1) DARK GRAY, SANDY SILT, LOW PLASTICITY, DRY	ML	N/A	PID=0 ppm BΓ=90-100 cpm
23.5 24.0		04/16/93 14:30	24	0	NO RECOVERY	N/A	N/A	
24.0 24.5	111852	04/16/93 14:35	37	6	VERY STIFF, (5Y4/1) DARK GRAY, SILTY CLAY, SOME GRAVEL WITH SOME (2.5Y6/5) LIGHT OLIVE BROWN, SANDY SILT, DRY	CL	3.75	PID=0 ppm BΓ=90-100 cpm
24.5 25.0	111853	04/16/93 14:35	49	6	VERY DENSE, (2.5Y4/3) OLIVE BROWN SAND, SOME SILT, WELL GRADED, MOIST SOME IRON STAINING	SW	N/A	PID=0 ppm BΓ=40-50 cpm
25.0 25.5		04/16/93 14:35	50	0	NO RECOVERY	N/A	N/A	
25.5 26.0	111854	04/17/93 09:05	12	6	VERY DENSE, (2YR5/4) SILTY SAND, WELL GRADED, DRY	SM	N/A	PID=0 ppm BΓ=40-50 cpm
26.0 26.5		04/17/93 09:05	24	0	NO RECOVERY	N/A	N/A	
26.5 27.0		04/17/93 09:05	32	0	NO RECOVERY	N/A	N/A	

NOTES:

Driller: D SMITH
Drilling Equipment: MOBILE B-80

SAA = Same as Above
PID = Photoionization Detector
N/A = Not Applicable

0391

5174

PROJECT NUMBER: 20.03.05	PROJECT NAME: CRU2 RI PHASE II FIELD INVESTIGATION	
BORING NUMBER: 11004	COORDINATES: NORTH 478036.79 EAST 1378971.55	DATE:17-APR-93
GROUND ELEVATION: 575.7	GWL: Depth Date/Time	DATE STARTED: 17-APR-93
ENGINEER/GEOLOGIST: A COMO	Depth Date/Time	DATE COMPLETE: 18-APR-93
DRILLING METHOD: HOLLOW STEM AUGER		

DEPTH	SAMPLE	DATE TIME	BLOWS ON SAMPLE	RECOVERY INCHES		USCS SYMBOL	TSF	REMARKS
.5	111856	04/17/93 15:45	4	6	STIFF, (2.5Y,4/3), SILTY CLAY, ORGANIC MATERIAL, SOME GRAVEL, LOW PLASTICITY, DRY	CL	1.0	PID=0 ppm BΓ=40-50 cpm
.5 1.0	111857	04/17/93 15:45	7	6	BLACK ASH, DRY, (2.5YR, 2.5YR/0)	N/A	N/A	PID=0 ppm BΓ=40-50 cpm
1.0 1.5		04/17/93 15:45	6	0	NO RECOVERY	N/A	N/A	
1.5 2.0	111858	04/17/93 15:50	4	6	BLACK ASH, DRY	N/A	N/A	PID=0 ppm BΓ=40-50 cpm
2.0 2.5	111859	04/17/93 15:50	8	6	SAA	N/A	N/A	PID=0 ppm BΓ=40-50 cpm
2.5 3.0	111860	04/17/93 15:50	12	6	SAA	N/A	N/A	PID=0 ppm BΓ=40-50 cpm
3.0 3.5	111861	04/17/93 15:55	12	6	SAA	N/A	N/A	PID=0 ppm BΓ=30-40 cpm
3.5 4.0	111862	04/17/93 15:55	4	6	SAA	N/A	N/A	PID=0 ppm BΓ=30-40 cpm
4.0 4.5		04/17/93 15:55	9	0	NO RECOVERY	N/A	N/A	
4.5 5.0	111863	04/17/93 16:00	4	6	BLACK ASH, DRY	N/A	N/A	PID=0 ppm BΓ=20-30 cpm
5.0 5.5	111864	04/17/93 16:00	8	6	BLACK ASH, DRY, (2.5YR, 2.5/0)	N/A	N/A	PID=0 ppm BΓ=20-30 cpm
5.5 6.0		04/17/93 16:00	5	0	NO RECOVERY	N/A	N/A	
6.0 6.5	111865	04/17/93 16:05	4	6	BLACK ASH, DRY, SAA	N/A	N/A	PID=0 ppm BΓ=40-50 cpm

NOTES:
HYDROPUNCH BORING

Boring Contractor: PENNSYLVANIA DRILLING
Driller: DON SMITH, SAM SMITH
Drilling Equipment: MOBILE B-80

SAA = Same as Above
PID = Photoionization Detector
N/A = Not Applicable

5174

PROJECT NUMBER: 20.03.05	PROJECT NAME: CRU2 RI PHASE II FIELD INVESTIGATION	
BORING NUMBER: 11004	COORDINATES: NORTH 478036.79 EAST 1378971.55	DATE:17-APR-93
GROUND ELEVATION: 575.7	GWL: Depth Date/Time	DATE STARTED: 17-APR-93
ENGINEER/GEOLOGIST: A COMO	Depth Date/Time	DATE COMPLETE: 18-APR-93
DRILLING METHOD: HOLLOW STEM AUGER		

DEPTH	SAMPLE	DATE TIME	BLOWS ON SAMPLE	RECOVERY INCHES		USCS SYMBOL	TSF	REMARKS
6.5 7.0	111866	04/17/93 16:05	3	6	SAA	N/A	N/A	PID=0 ppm βΓ=40-50 cpm
7.0 7.5	111867	04/17/93 16:05	2	3	SAA	N/A	N/A	PID=0 ppm βΓ=40-50 cpm
7.5 8.0	111868	04/17/93 10:10	3	6	SAA	N/A	N/A	PID=0 ppm βΓ=20-30 cpm
8.0 8.5	111869	04/17/93 16:10	3	6	SAA	N/A	N/A	PID=0 ppm βΓ=20-30 cpm
8.5 9.0		04/17/93 16:10	3	2	SAA	N/A	N/A	PID=0 ppm βΓ=20-30 cpm
9.0 9.5	111871	04/17/93 16:15	2	6	SAA	N/A	N/A	PID=0 ppm βΓ=10-20 cpm
9.5 10.0	111872	04/17/93 16:15	3	6	SAA	N/A	N/A	PID=0 ppm βΓ=10-20 cpm
10.0 10.5		04/17/93 16:05	2	0	NO RECOVERY	N/A	N/A	
10.5 11.0	111873	04/17/93 16:20	5	6	BLACK ASH, DRY	N/A	N/A	PID=0 ppm βΓ=10-20 cpm
11.0 11.5	111874	04/17/93 16:20	3	6	SAA	N/A	N/A	PID=0 ppm βΓ=10-20 cpm
11.5 12.0	111875	04/17/93 16:20	2	2	SAA	N/A	N/A	PID=0 ppm βΓ=10-20 cpm
12.0 12.5	111876	04/18/93 08:30	3	6	SAA	N/A	N/A	PID=0 ppm βΓ=30-40 cpm
12.5 13.0	111877	04/18/93 08:30	4	6	SAA	N/A	N/A	PID=0 ppm βΓ=30-40 cpm

NOTES:
HYDROPUNCH BORING

Boring Contractor: PENNSYLVANIA DRILLING
Driller: DON SMITH, SAM SMITH
Drilling Equipment: MOBILE B-80

SAA = Same as Above
PID = Photoionization Detector
N/A = Not Applicable

0393

5174

PROJECT NUMBER: 20.03.05	PROJECT NAME: CRU2 RI PHASE II FIELD INVESTIGATION	
BORING NUMBER: 11004	COORDINATES: NORTH 478036.79 EAST 1378971.55	DATE:17-APR-93
GROUND ELEVATION: 575.7	GWL: Depth Date/Time	DATE STARTED: 17-APR-93
ENGINEER/GEOLOGIST: A COMO	Depth Date/Time	DATE COMPLETE: 18-APR-93
DRILLING METHOD: HOLLOW STEM AUGER		

DEPTH	SAMPLE	DATE TIME	BLOWS ON SAMPLE	RECOVERY INCHES		USCS SYMBOL	TSF	REMARKS
13.0 13.5		04/18/93 08:30	4	0	NO RECOVERY	N/A	N/A	
13.5 14.0	111878	04/18/93 08:35	3	6	BLACK ASH, DRY	N/A	N/A	PID=0 ppm βΓ=30-40 cpm
14.0 14.5	111879	04/18/93 08:35	3	6	SAA	N/A	N/A	PID=0 ppm βΓ=30-40 cpm
14.5 15.0	111880	04/18/93 08:35	6	6	SAA, WITH SOME (2.5Y,6/6) OLIVE YELLOW, CLAYEY, LOW PLASTIICITY, DRY	N/A	N/A	PID=0 ppm βΓ=30-40 cpm
15.0 15.5	111881	04/18/93 08:40	3	6	BLACK ASH, DRY	N/A	N/A	PID=0 ppm βΓ=30-40 cpm
15.5 16.0	111882	04/18/93 08:40	7	6	VERY STIFF, (10YR,5/6) YELLOWISH BROWN, CLAYEY SILT, LOW PLASTICITY, DRY, SOME SMALL GRAVEL.	ML	3.25	PID=0 ppm βΓ=30-40 cpm
16.0 16.5		04/18/93 08:40	10	0	NO RECOVERY	N/A	N/A	
16.5 17.0	111803	04/18/93 08:45	7	6	VERY STIFF, (10YR,5/6) YELLOWISH BROWN, CLAYEY SILT, SOME SMALL GRAVEL, LOW PLASTICITY, DRY	ML	3.5	PID=0 ppm βΓ=30-40 cpm
17.0 17.5	111884	04/18/93 08:45	9	6	SAA	ML	3.5	PID=0 ppm βΓ=30-40 cpm
17.5 18.0		04/18/93 08:45	2	0	NO RECOVERY	N/A	N/A	
18.0 18.5	111885	04/18/93 08:50	7	6	VERY STIFF, (10YR,5/6) YELLOWISH BROWN, CLAYEY SILT, SOME SMALL GRAVEL, LOW PLASTICITY, DRY	ML	3.25	PID=0 ppm βΓ=30-40 cpm
18.5 19.0	111886	04/18/93 08:50	7	6	SAA, WITH (10YR,5/6) YELLOWISH BROWN, SILTY SAND, WELL GRADED, DRY	SM	N/A	PID=0 ppm βΓ=30-40 cpm
19.0 19.5		04/18/93 08:50	9	0	NO RECOVERY	N/A	N/A	

NOTES:
HYDROPUNCH BORING

Boring Contractor: PENNSYLVANIA DRILLING
Driller: DON SMITH, SAM SMITH
Drilling Equipment: MOBILE B-80

SAA = Same as Above
PID = Photoionization Detector
N/A = Not Applicable

0394

PROJECT NUMBER: 20603.05	PROJECT NAME: CRU2 RI PHASE II FIELD INVESTIGATION	
BORING NUMBER: 11004	COORDINATES: NORTH 478036.79 EAST 1378971.55	DATE:17-APR-93
GROUND ELEVATION: 575.7	GWL: Depth Date/Time	DATE STARTED: 17-APR-93
ENGINEER/GEOLOGIST: A COMO	Depth Date/Time	DATE COMPLETE: 18-APR-93
DRILLING METHOD: HOLLOW STEM AUGER		

DEPTH	SAMPLE	DATE TIME	BLOWS ON SAMPLE	RECOVERY INCHES		USCS SYMBOL	TSF	REMARKS
19.5 20.0	111887	04/18/93 08:55	12	6	DENSE, (10YR,5/6) YELLOWISH BROWN,SILTY SAND, WELL GRADED, SMALL GRAVEL, DRY	SM	N/A	PID=0 ppm BΓ=30-40 cpm
20.0 20.5	111888	04/18/93 08:55	24	6	DENSE, (10YR, 5/6) YELLOWISH BROWN, SILTY SAND, WELL GRADED, SMALL GRAVEL, DRY	SM	N/A	PID=0 ppm BΓ=30-40 cpm
20.5 21.0	111889	04/18/93 08:55	24	3	SAA	SM	N/A	PID=0 ppm BΓ=30-40 cpm
21.0 21.5	111890	04/18/93 09:25	10	6	SAA, DRY	SM	N/A	PID=0 ppm BΓ=30-40 cpm
21.5 22.0	111891	04/18/93 09:25	18	6	SAA, MOIST	SM	N/A	PID=0 ppm BΓ=30-40 cpm
22.0 22.5		04/18/93 09:25	16	0	NO RECOVERY	N/A	N/A	
22.5 23.0	111892	04/18/93 09:30	12	6	VERY DENSE, (10YR,5/3) BROWN, SILTY SAND, WELL GRADED, SMALL GRAVEL, WET	SM	N/A	PID=0 ppm BΓ=30-40 cpm
23.0 23.5	111893	04/18/93 09:30	28	6	HARD, (5Y,5/1) GRAY, SILTY CLAY, LOW PLASTICITY, GRAVEL, DRY	CL	5	PID=0 ppm BΓ=30-40 cpm
23.5 24.0	111894	04/18/93 09:30	40	6	SAA	CL	5	PID=0 ppm BΓ=30-40 cpm
24.0 24.5	111895	04/18/93 12:55	12	6	VERY STIFF, (5Y,5/1)GRAY, SILTY CLAY, MEDIUM PLASTICITY, SOME GRAVEL, DRY	CL	3.25	PID=0 ppm BΓ=20-30 cpm
24.5 25.0	111896	04/18/93 12:55	20	6	SAA, DRY	CL	3.5	PID=0 ppm BΓ=20-30 cpm
25.0 25.5		04/18/93 12:55	25	0	NO RECOVERY	N/A	N/A	

NOTES:
HYDROPUNCH BORING

Boring Contractor: PENNSYLVANIA DRILLING
Driller: DON SMITH, SAM SMITH
Drilling Equipment: MOBILE B-80

SAA = Same as Above
PID = Photoionization Detector
N/A = Not Applicable

5174

PROJECT NUMBER: 20.03.05	PROJECT NAME: CRU2 RI PHASE II FIELD INVESTIGATION	
BORING NUMBER: 11005	COORDINATES: NORTH 478033.72 EAST 1379014.98	DATE:28-APR-93
GROUND ELEVATION: 570.9	GWL: Depth Date/Time	DATE STARTED: 28-APR-93
ENGINEER/GEOLOGIST: D O BRIEN	Depth Date/Time	DATE COMPLETE: 29-APR-93
DRILLING METHOD: HOLLOW STEM AUGER		

DEPTH	SAMPLE	DATE TIME	BLOWS ON	SAMPLE	RECOVERY	INCHES		USCS SYMBOL	TSF	REMARKS
.5	111970	04/28/93 14:45	2		6		VERY LOOSE, BLACK FLYASH W/ORGANICS, DRY	N/A	N/A	PID=0 ppm BΓ=40 cpm
1.0	111971	04/28/93 14:45	2		3		SAA	N/A	N/A	PID=0 ppm BΓ=40 cpm
1.5		04/28/93 00:00	2		0		NO RECOVERY	N/A	N/A	
2.0	111972	04/28/93 14:50	4		5		LOOSE, BLACK FLYASH W/ORGANICS, DRY	N/A	N/A	PID=0 ppm BΓ=60 cpm
2.5		04/28/93 14:50	4		0		NO RECOVERY	N/A	N/A	
3.0		04/28/93 14:50	4		0		NO RECOVERY	N/A	N/A	
3.5	111973	04/28/93 14:55	4		6		MEDIUM DENSE, BLACK FLYASH WITH ORGANICS, DRY	N/A	N/A	PID=0 ppm BΓ=60 cpm
4.0	111974	04/28/93 14:55	6		6		SAA	N/A	N/A	PID=0 ppm BΓ=60 cpm
4.5	111975	04/28/93 14:55	8		6		SAA	N/A	N/A	PID=0 ppm BΓ=60 cpm
5.0	111976	04/28/93 15:00	4		6		SAA	N/A	N/A	PID=0 ppm BΓ=60 cpm
5.5	111977	04/28/93 15:00	4		6		SAA	N/A	N/A	PID=0 ppm BΓ=60 cpm
6.0		04/28/93 00:00	7		0		NO RECOVERY	N/A	N/A	
6.5	111978	04/29/93 09:05	4		6		MEDIUM DENSE, BLACK FLYASH W/ORGANICS, DRY	N/A	N/A	PID=0 ppm BΓ=60 cpm

NOTES:

Driller: JEFF BENTLY, BILL SEBERT
Drilling Equipment: ACKER SENTRY

SAA = Same as Above
PID = Photoionization Detector
N/A = Not Applicable

0396

PROJECT NUMBER: 20.03.05	PROJECT NAME: CRU2 RI PHASE II FIELD INVESTIGATION	
BORING NUMBER: 11005	COORDINATES: NORTH 478033.72 EAST 1379014.98	DATE:28-APR-93
GROUND ELEVATION: 570.9	GWL: Depth Date/Time	DATE STARTED: 28-APR-93
ENGINEER/GEOLOGIST: D O BRIEN	Depth Date/Time	DATE COMPLETE: 29-APR-93
DRILLING METHOD: HOLLOW STEM AUGER		

DEPTH	SAMPLE	DATE TIME	BLOWS ON SAMPLE	RECOVERY INCHES		USCS SYMBOL	TSF	REMARKS
6.5 7.0	111979 04/29/93 09:05	5	5	SAA		N/A	N/A	PID=0 ppm BΓ=60 cpm
7.0 7.5	04/29/93 09:10	6	0	NO RECOVERY		N/A	N/A	
7.5 8.0	111980 04/29/93 09:15	2	6	LOOSE, BLACK FLYASH, DRY		N/A	N/A	PID=0 ppm BΓ=60 cpm
8.0 8.5	111981 04/29/93 09:15	4	6	SAA		N/A	N/A	PID=0 ppm BΓ=60 cpm
8.5 9.0	111982 04/29/93 09:15	6	6	SOFT, (2.5Y, 5/4) LIGHT OLVIE BROWN, GRAVELLY CLAY, NO PLASTICITY, MOIST		CL	.5	PID=0 ppm BΓ=60 cpm
9.0 9.5	111983 04/29/93 09:20	7	5	MEDIUM DENSE, (D2.5Y, 5/3) LIGHT OLIVE BROWN, POORLY GRADED SAND WITH CONCRETE DEBRIS, DRY		SP	N/A	PID=0 ppm BΓ=60 cpm
9.5 10.0	04/29/93 00:00	9	0	NO RECOVERY		N/A	N/A	
10.0 10.5	04/29/93 00:00	9	0	NO RECOVERY		N/A	N/A	
10.5 11.0	111984 04/29/93 09:40	6	6	SOFT, (2.5Y, 5/4) LIGHT OLIVE BROWN, CLAY W/CONCRETE, SAND, AND ORGANICS, NO PLASTICITY, MOIST		CL	.5	PID=0 ppm BΓ=450 cpm
11.0 11.5	04/29/93 00:00	4	0	NO RECOVERY		N/A	N/A	
11.5 12.0	04/29/93 00:00	4	0	NO RECOVERY		N/A	N/A	
12.0 12.5	111985 04/29/93 09:45	5	6	STIFF, (2.5Y, 4/4) OLIVE BROWN, CLAY W/GRAVEL AND SAND, LOW PLASTICITY, MOIST		CL	1.0	PID=0 ppm BΓ=260 cpm
12.5 13.0	111986 04/29/93 09:45	6	6	SAA		CL	1.75	PID=0 ppm BΓ=80 cpm

NOTES:

Driller: JEFF BENTLY, BILL SEBERT
Drilling Equipment: ACKER SENTRY

SAA = Same as Above
PID = Photoionization Detector
N/A = Not Applicable

0397

5174

PROJECT NUMBER: 20.03.05	PROJECT NAME: CRU2 RI PHASE II FIELD INVESTIGATION	
BORING NUMBER: 11005	COORDINATES: NORTH 478033.72 EAST 1379014.98	DATE:28-APR-93
GROUND ELEVATION: 570.9	GWL: Depth Date/Time	DATE STARTED: 28-APR-93
ENGINEER/GEOLOGIST: D O BRIEN	Depth Date/Time	DATE COMPLETE: 29-APR-93
DRILLING METHOD: HOLLOW STEM AUGER		

DEPTH	SAMPLE	DATE TIME	BLOWS ON	SAMPLE	RECOVERY	INCHES		USCS SYMBOL	TSF	REMARKS
13.0 13.5		04/29/93 00:00	8		0		NO RECOVERY	N/A	N/A	
13.5 14.0	111987	04/29/93 10:00	9		6		HARD, (2.5Y, 5/4) LT. OLIVE BROWN, CLAY WITH GRAVEL, NO PLASTICITY, DRY	CL	4.0	PID=0 ppm BΓ=60 cpm
14.0 14.5	111988	04/29/93 10:00	11		6		SAA	CL	4.5	PID=0 ppm BΓ=60 cpm
14.5 15.0		04/29/93 00:00	16		0		NO RECOVERY	N/A	N/A	
15.0 15.5		04/29/93 10:10	12		0		NO RECOVERY	N/A	N/A	
15.5 16.0		04/29/93 00:00	10		0		NO RECOVERY	N/A	N/A	
16.0 16.5		04/29/93 00:00	6		0		NO RECOVERY	N/A	N/A	
16.5 17.0	111989	04/29/93 10:20	7		6		HARD, (2.5Y, 6/6) OLIVE YELLOW, GRAVELLY CLAY, NO PLASTICITY, DRY	CL	4.0	PID=0 ppm BΓ=60 cpm
17.0 17.5	116119	04/29/93 10:20	22		6		VERY STIFF, (2.5Y, 6/6) OLIVE YELLOW, GRAVELLY CLAY, LOW PLASTICITY, SLIGHTLY MOIST	CL	3.0	PID=0 ppm BΓ=60 cpm
17.5 18.0	116120	04/29/93 10:20	23		6		HARD, (2.5Y, 6/6) OLIVE YELLOW, GRAVELLY CLAY, NO PLASTLICITY, DRY	CL	4.0	PID=0 ppm BΓ=60 cpm
18.0 18.5	116121	04/29/93 10:35	50		4		HARD, (2.5Y, 6/6) OLIVE YELLOW, GRAVELLY CLAY, NO PLASTICITY, DRY	CL	4.5	PID=0 ppm BΓ=60 cpm
18.5 19.0		04/29/93 00:00	N/A		0		NO RECOVERY	N/A	N/A	
19.0 19.5		04/29/93 00:00	N/A		0		NO RECOVERY	N/A	N/A	

NOTES:

Driller: JEFF BENTLY, BILL SEBERT
Drilling Equipment: ACKER SENTRY

SAA = Same as Above
PID = Photoionization Detector
N/A = Not Applicable

0398

5174

PROJECT NUMBER: 20.03.05	PROJECT NAME: CRU2 RI PHASE II FIELD INVESTIGATION	
BORING NUMBER: 11005	COORDINATES: NORTH 478033.72 EAST 1379014.98	DATE:28-APR-93
GROUND ELEVATION: 570.9	GWL: Depth Date/Time	DATE STARTED: 28-APR-93
ENGINEER/GEOLOGIST: D O BRIEN	Depth Date/Time	DATE COMPLETE: 29-APR-93
DRILLING METHOD: HOLLOW STEM AUGER		

DEPTH	SAMPLE	DATE TIME	BLOWS ON SAMPLE	RECOVERY INCHES		USCS SYMBOL	TSF	REMARKS
19.5 20.0	116122 04/29/93 13:30		50	6	VERY DENSE, (2.5Y, 5/4) LIGHT OLIVE BROWN, MEDIUM TO COARSE SAND, POORLY GRADED, SLIGHTLY MOIST	SP	N/A	PID=0 ppm 8Γ=60 cpm
20.0 20.5		04/29/93 13:30	50	0	NO RECOVERY	N/A	N/A	
20.5 21.0		04/29/93 00:00	N/A	0	NO RECOVERY	N/A	N/A	

NOTES:

Driller: JEFF BENTLY, BILL SEBERT
Drilling Equipment: ACKER SENTRY

SAA = Same as Above
PID = Photoionization Detector
N/A = Not Applicable

0399

PROJECT NUMBER: 20.03.05	PROJECT NAME: CRU2 RI PHASE II FIELD INVESTIGATION	
BORING NUMBER: 11006	COORDINATES: NORTH 478013.62 EAST 1379030.41	DATE:27-APR-93
GROUND ELEVATION: 571.4	GWL: Depth Date/Time	DATE STARTED: 27-APR-93
ENGINEER/GEOLOGIST: D OBRIEN	Depth Date/Time	DATE COMPLETE: 27-APR-93
DRILLING METHOD: HOLLOW STEM AUGER		

DEPTH	SAMPLE	DATE TIME	BLOWS ON SAMPLE	RECOVERY INCHES		USCS SYMBOL	TSF	REMARKS
.5	111940	04/22/93 08:45	3	5	MEDIUM DENSE, BLACK FLYASH, DRY	N/A	N/A	PID=0 ppm 8Γ=40 cpm
.5 1.0		04/22/93 00:00	6	0	NO RECOVERY	N/A	N/A	
1.0 1.5		04/22/93 00:00	6	0	NO RECOVERY	N/A	N/A	
1.5 2.0	111941	04/22/93 08:50	6	6	MEDIUM DENSE, BLACK FLYASH W/ORGANICS, DRY	N/A	N/A	PID=0 ppm 8Γ=60 cpm
2.0 2.5	111942	04/22/93 08:50	8	6	SAA	N/A	N/A	PID=0 ppm 8Γ=60 cpm
2.5 3.0		04/22/93 00:00	8	0	NO RECOVERY	N/A	N/A	
3.0 3.5	111943	04/22/93 08:55	6	6	MEDIUM DENSE, BLACK FLYASH WIDTH ORGANICS, DRY	N/A	N/A	PID=0 ppm 8Γ=60 cpm
3.5 4.0		04/22/93 00:00	7	0	NO RECOVERY	N/A	N/A	
4.0 4.5		04/22/93 00:00	8	0	NO RECOVERY	N/A	N/A	
4.5 5.0	111944	04/22/93 09:05	2	6	LOOSE, BLACK FLYASH WITH ORGANICS, DRY	N/A	N/A	PID=0 ppm 8Γ=60 cpm
5.0 5.5	111945	04/22/93 09:05	2	6	SAA	N/A	N/A	PID=0 ppm 8Γ=60 cpm
5.5 6.0	111946	04/22/93 09:05	3	6	SAA	N/A	N/A	PID=0 ppm 8Γ=60 cpm
6.0 6.5	111947	04/22/93 09:30	13	6	MEDIUM DENSE, BLACK FLYASH, DRY	N/A	N/A	PID=0 ppm 8Γ=60 cpm

NOTES:

Boring Contractor: PENNSYLVANIA DRILLING CO
Driller: JEFF BENTLEY, DONNY ARTHUR
Drilling Equipment: ACKER SENTRY

SAA = Same as Above
PID = Photoionization Detector
N/A = Not Applicable

5174

PROJECT NUMBER: 20.03.05	PROJECT NAME: CRU2 RI PHASE II FIELD INVESTIGATION	
BORING NUMBER: 11006	COORDINATES: NORTH 478013.62 EAST 1379030.41	DATE:27-APR-93
GROUND ELEVATION: 571.4	GWL: Depth Date/Time	DATE STARTED: 27-APR-93
ENGINEER/GEOLOGIST: D OBRIEN	Depth Date/Time	DATE COMPLETE: 27-APR-93
DRILLING METHOD: HOLLOW STEM AUGER		

DEPTH	SAMPLE	DATE TIME	BLOWS ON SAMPLE	RECOVERY INCHES		USCS SYMBOL	TSF	REMARKS
6.5 7.0	111948 04/22/93 09:30	8	6	SAA		N/A	N/A	PID=0 ppm BΓ=60 cpm
7.0 7.5	111949 04/22/93 09:30	8	6	SAA		N/A	N/A	PID=0 ppm BΓ=60 cpm
7.5 8.0	111950 04/22/93 09:45	6	6	SAA		N/A	N/A	PID=0 ppm BΓ=40 cpm
8.0 8.5	111951 04/22/93 09:45	6	5	SAA		N/A	N/A	PID=0 ppm BΓ=40 cpm
8.5 9.0	04/22/93 00:00	6	0	NO RECOVERY		N/A	N/A	
9.0 9.5	111952 04/22/93 09:50	3	6	LOOSE, BLACK FLYASH W/GRAVEL, DRY		N/A	N/A	PID=0 ppm BΓ=60 cpm
9.5 10.0	04/22/93 00:00	4	0	NO RECOVERY		N/A	N/A	
10.0 10.5	04/22/93 00:00	3	0	NO RECOVERY		N/A	N/A	
10.5 11.0	111953 04/22/93 10:05	4	5	MEDIUM DENSE, BLACK FLYASH WITH CINDER BLACK DEBRIS, DRY		N/A	N/A	PID=.3 ppm BΓ=50 cpm
11.0 11.5	04/22/93 00:00	8	0	NO RECOVERY		N/A	N/A	
11.5 12.0	04/22/93 00:00	7	0	NO RECOVERY		N/A	N/A	
12.0 12.5	111954 04/22/93 10:15	3	3	LOOSE, BLACK FLYASH W/CINDER BLOCKS AND WOOD, MOIST; AND SOFT (2.5Y, 5/2) GRAYISH BROWN, GRAVELLY CLAY, MOIST		CL	.25	PID=.1 ppm BΓ=80 cpm
12.5 13.0	04/22/93 00:00	4	0	NO RECOVERY		N/A	N/A	

NOTES:

Boring Contractor: PENNSYLVANIA DRILLING CO
Driller: JEFF BENTLEY, DONNY ARTHUR
Drilling Equipment: ACKER SENTRY

SAA = Same as Above
PID = Photoionization Detector
N/A = Not Applicable

0401

PROJECT NUMBER: 20.03.05	PROJECT NAME: CRU2 RI PHASE II FIELD INVESTIGATION	
BORING NUMBER: 11006	COORDINATES: NORTH 478013.62 EAST 1379030.41	DATE:27-APR-93
GROUND ELEVATION: 571.4	GWL: Depth Date/Time	DATE STARTED: 27-APR-93
ENGINEER/GEOLOGIST: D OBRIEN	Depth Date/Time	DATE COMPLETE: 27-APR-93
DRILLING METHOD: HOLLOW STEM AUGER		

DEPTH	SAMPLE	DATE TIME	BLOWS ON SAMPLE	RECOVERY INCHES		USCS SYMBOL	TSF	REMARKS
13.0 13.5		04/22/93 00:00	3	0	NO RECOVERY	N/A	N/A	
13.5 14.0	111955	04/22/93 10:30	3	4	LOOSE, (2.5Y, 5/2) GRAYISH BROWN, SAND WITH GRAVEL AND CONCRETE, WET	SP	N/A	PID=0 ppm BΓ=60 cpm
14.0 14.5		04/22/93 00:00	7	0	NO RECOVERY	N/A	N/A	
14.5 15.0		04/22/93 00:00	3	0	NO RECOVERY	N/A	N/A	
15.0 15.5	111956	04/22/93 10:45	5	6	MEDIUM DENSE, (2.5Y 5/2) GRAYISH BROWN, SAND WITH DEPRESSED FIBROUS MATERIAL, METAL NETTING, WET	SP	N/A	PID=.5 ppm BΓ=60 cpm
15.5 16.0		04/22/93 00:00	8	0	NO RECOVERY	N/A	N/A	
16.0 16.5		04/22/93 00:00	8	0	NO RECOVERY	N/A	N/A	
16.5 17.0		04/22/93 11:00	50	0	NO RECOVERY	N/A	N/A	
17.0 17.5		04/22/93 00:00	N/A	0	NO RECOVERY	N/A	N/A	
17.5 18.0		04/22/93 00:00	N/A	0	NO RECOVERY	N/A	N/A	
18.0 18.5	111957	04/22/93 13:25	8	6	MEDIUM DENSE, BLACK, COARSE SAND MIXED W/FLYASH, BRICK NAILS, POORLY GRADED, WET	SP	N/A	PID=0 ppm BΓ=60 cpm
18.5 19.0	111958	04/22/93 13:25	8	4	SAA	SP	N/A	PID=0 ppm BΓ=60 cpm
19.0 19.5		04/22/93 00:00	7	0	NO RECOVERY	N/A	N/A	

NOTES:

Boring Contractor: PENNSYLVANIA DRILLING CO
Driller: JEFF BENTLEY, DONNY ARTHUR
Drilling Equipment: ACKER SENTRY

SAA = Same as Above
PID = Photoionization Detector
N/A = Not Applicable

0402

PROJECT NUMBER: 20.03.05	PROJECT NAME: CRU2 RI PHASE II FIELD INVESTIGATION	
BORING NUMBER: 11006	COORDINATES: NORTH 478013.62 EAST 1379030.41	DATE:27-APR-93
GROUND ELEVATION: 571.4	GWL: Depth Date/Time	DATE STARTED: 27-APR-93
ENGINEER/GEOLOGIST: D OBRIEN	Depth Date/Time	DATE COMPLETE: 27-APR-93
DRILLING METHOD: HOLLOW STEM AUGER		

DEPTH	SAMPLE	DATE TIME	BLOWS ON SAMPLE	RECOVERY INCHES		USCS SYMBOL	TSF	REMARKS
19.5 20.0	111959 04/22/93 13:30		20	5	SOFT, (2.5Y, 5/2) GRAYISH BROWN, CLAY W/FLYASH, BRICK, COPPER WIRE, LOW PLASTICITY, WET	CL	.5	PID=0 ppm BΓ=1100 cpm
20.0 20.5		04/22/93 00:00	20	0	NO RECOVERY	N/A	N/A	
20.5 21.0		04/22/93 00:00	20	0	NO RECOVERY	N/A	N/A	
21.0 21.5	111960 04/26/93 13:55		17	6	MEDIUM DENSE, (10YR, 4/6) DARK YELLOWISH BROWN, SILT AND FINE SAND MOIST	SM	N/A	PID=0 ppm BΓ=100 cpm
21.5 22.0	111961 04/26/93 13:55		7	5	SAA	SM	N/A	PID=0 ppm BΓ=100 cpm
22.0 22.5		04/26/93 00:00	7	0	NO RECOVERY	N/A	N/A	
22.5 23.0	111962 04/26/93 14:30		5	6	VERY LOOSE, (2.5Y 5/1) GRAY, CLAYEY SLUDGE WITH GRAVEL AND NAILS, WET	N/A	N/A	PID=0 ppm BΓ=900 cpm
23.0 23.5	111962 04/26/93 14:30		5	4	SAA	N/A	N/A	PID=0 ppm BΓ=900 cpm
23.5 24.0		04/26/93 00:00	4	0	NO RECOVERY	N/A	N/A	
24.0 24.5	111962 113492 04/26/93 14:45		3	6	LOOSE, (2.5Y, 5/1) GRAY, CLAYEY SLUDGE W/GRAVEL, WET	N/A	N/A	PID=0 ppm BΓ=1100 cpm
24.5 25.0	111963 04/26/93 14:45		4	6	LOOSE, (10YR, 5/6) YELLOWISH BROWN, MED. TO COARSE SAND, POORLY GRADED, DRY	SP	N/A	PID=0 ppm BΓ=60 cpm
25.0 25.5		04/26/93 00:00	4	0	NO RECOVERY	N/A	N/A	
25.5 26.0	111964 04/26/93 15:00		3	6	LOOSE, (10YR, 5/6) YELLOWISH BROWN, MEDIUM TO COARSE SAND, POORLY GRADED, DRY	SP	N/A	PID=0 ppm BΓ=60 cpm

NOTES:

Boring Contractor: PENNSYLVANIA DRILLING CO
Driller: JEFF BENTLEY, DONNY ARTHUR
Drilling Equipment: ACKER SENTRY

SAA = Same as Above
PID = Photoionization Detector
N/A = Not Applicable

5110

0403

PROJECT NUMBER: 20.03.05	PROJECT NAME: CRU2 RI PHASE II FIELD INVESTIGATION	
BORING NUMBER: 11006	COORDINATES: NORTH 478013.62 EAST 1379030.41	DATE:27-APR-93
GROUND ELEVATION: 571.4	GWL: Depth Date/Time	DATE STARTED: 27-APR-93
ENGINEER/GEOLOGIST: D OBRIEN	Depth Date/Time	DATE COMPLETE: 27-APR-93
DRILLING METHOD: HOLLOW STEM AUGER		

DEPTH	SAMPLE	DATE TIME	BLOWS ON SAMPLE	RECOVERY INCHES		USCS SYMBOL	TSF	REMARKS
26.0 26.5		04/26/93 00:00	4	0	NO RECOVERY	N/A	N/A	
26.5 27.0		04/26/93 00:00	4	0	NO RECOVERY	N/A	N/A	
27.0 27.5	111967	04/26/93 15:10	4	6	MEDIUM DENSE, (10YR, 5/6) YELLOWISH BROWN, MEDIUM TO COARSE SAND, POORLY GRADED, DRY	SP	N/A	PID=0 ppm BΓ=60 cpm
27.5 28.0	111968	04/26/93 15:10	8	6	SAA	SP	N/A	PID=0 ppm BΓ=60 cpm
28.0 28.5	111969	04/26/93 15:10	9	6	SAA	SP	N/A	PID=0 ppm BΓ=60 cpm

NOTES:

Boring Contractor: PENNSYLVANIA DRILLING CO
Driller: JEFF BENTLEY, DONNY ARTHUR
Drilling Equipment: ACKER SENTRY

SAA = Same as Above
PID = Photoionization Detector
N/A = Not Applicable

0404

5174

PROJECT NUMBER: 20.03.05	PROJECT NAME: CRU2 RI PHASE II FIELD INVESTIGATION	
BORING NUMBER: 11007	COORDINATES: NORTH 478012.29 EAST 1378978.84	DATE:19-APR-93
GROUND ELEVATION: 575.5	GWL: Depth Date/Time	DATE STARTED: 19-APR-93
ENGINEER/GEOLOGIST: D O'BRIEN	Depth Date/Time	DATE COMPLETE: 21-APR-93
DRILLING METHOD: HOLLOW STEM AUGER		

DEPTH	SAMPLE	DATA TIME	BLOWS ON SAMPLE	RECOVERY INCHES		USCS SYMBOL	TSF	REMARKS
.5	110646	04/19/93 16:30	7	6	VERY STIFF, (2.5Y,5/6) LIGHT OLIVE BROWN, GRAVELLY CLAY, NO PLASTICITY, SLIGHTLY MOIST	CL	2.0	PID=0 ppm BΓ=40 cpm
.5 1.0	110647	04/19/93 16:30	11	3	MEDIUM DENSE, BLACK (2.5Y,5/1), FLYASH, DRY	N/A	N/A	PID=0 ppm BΓ=100 cpm
1.0 1.5		04/19/93 16:30	12	0	NO RECOVERY	N/A	N/A	
1.5 2.0	110648	04/19/93 16:45	8	6	LOOSE, BLACK (2.5Y,5/1), FLYASH WITH ORGANICS, DRY	N/A	N/A	PID=0 ppm BΓ=50 cpm
2.0 2.5	110649	04/19/93 16:45	5	5	SAA	N/A	N/A	PID=0 ppm BΓ=50 cpm
2.5 3.0		04/19/93 16:45	5	0	NO RECOVERY	N/A	N/A	
3.0 3.5	110650	04/19/93 16:55	2	6	LOOSE, BLACK (2.5Y,5/1) FLYASH, DRY	N/A	N/A	PID=0 ppm BΓ=100 cpm
3.5 4.0	110651	04/19/93 16:55	3	4	SAA	N/A	N/A	PID=0 ppm BΓ=100 cpm
4.0 4.5		04/19/93 16:55	2	0	NO RECOVERY	N/A	N/A	
4.5 5.0	110652	04/19/93 17:00	4	6	LOOSE, BLACK (2.5Y, 2.5/) FLYASH, DRY	N/A	N/A	PID=0 ppm BΓ=100 cpm
5.0 5.5	110653	04/19/93 17:00	4	6	SAA	N/A	N/A	PID=0 ppm BΓ=100 cpm
5.5 6.0		04/19/93 17:00	5	0	NO RECOVERY	N/A	N/A	
6.0 6.5	110654	04/20/93 08:50	3	6	LOOSE, BLACK (2.5Y,2.5/1) FLYASH, SOME SLAG, DRY	N/A	N/A	PID=0 ppm BΓ=50 cpm

NOTES:

Driller: JEFF BENTLEY, DAN JAMISON
Drilling Equipment: ACKER SENTRY

SAA = Same as Above
PID = Photoionization Detector
N/A = Not Applicable

PROJECT NUMBER: 20.03.05	PROJECT NAME: CRU2 RI PHASE II FIELD INVESTIGATION	
BORING NUMBER: 11007	COORDINATES: NORTH 478012.29 EAST 1378978.84	DATE:19-APR-93
GROUND ELEVATION: 575.5	GWL: Depth Date/Time	DATE STARTED: 19-APR-93
ENGINEER/GEOLOGIST: D O'BRIEN	Depth Date/Time	DATE COMPLETE: 21-APR-93
DRILLING METHOD: HOLLOW STEM AUGER		

DEPTH	SAMPLE	DATE TIME	BLOWS ON SAMPLE	RECOVERY INCHES		USCS SYMBOL	TSF	REMARKS
6.5 7.0	110655 04/20/93 08:50		4	6	SAA	N/A	N/A	PID=0 ppm BΓ=50 cpm
7.0 7.5	110656 04/20/93 08:50		3	3	SAA	N/A	N/A	PID=0 ppm BΓ=50 cpm
7.5 8.0	110657 04/20/93 09:05		2	6	SAA	N/A	N/A	PID=0 ppm BΓ=60 cpm
8.0 8.5	110658 04/20/93 09:05		3	6	SAA	N/A	N/A	PID=0 ppm BΓ=50 cpm
8.5 9.0	04/20/93 09:05		3	0	NO RECOVERY	N/A	N/A	
9.0 9.5	110659 04/20/93 09:18		3	6	LOOSE, BLACK FLYASH (2.5Y, 2.5/1) MEDIUM TO COARSE SAND, SOME GRAVEL SIZED SLAG, DRY	N/A	N/A	PID=0 ppm BΓ=60 cpm
9.5 10.0	110660 04/20/93 09:18		4	3	SAA	N/A	N/A	PID=0 ppm BΓ=60 cpm
10.0 10.5	04/20/93 09:18		4	0	NO RECOVERY	N/A	N/A	
10.5 11.0	110661 04/20/93 09:33		3	6	LOOSE, BLACK (2.5Y, 2.5/1), FLYASH, MEDIUM COARSE SAND, SOME GRAVEL SLAG, DRY	N/A	N/A	PID=0 ppm BΓ=70 cpm
11.0 11.5	110662 04/20/93 09:33		3	6	SAA	N/A	N/A	PID=0 ppm BΓ=70 cpm
11.5 12.0	04/20/93 09:33		3	0	NO RECOVERY	N/A	N/A	
12.0 12.5	110663 04/20/93 09:43		2	6	VERY LOOSE, BLACK (2.5Y, 2.5/1), FLYASH, MEDIUM WITH COARSE SAND, TRACE GRAVEL SLAG, DRY	N/A	N/A	PID=0 ppm BΓ=80 cpm
12.5 13.0	110664 04/20/93 09:43		1	6	SAA	N/A	N/A	PID=0 ppm BΓ=80 cpm

NOTES:

Driller: JEFF BENTLEY, DAN JAMISON
Drilling Equipment: ACKER SENTRY

SAA = Same as Above
PID = Photoionization Detector
N/A = Not Applicable

5174

PROJECT NUMBER: 20.03.05	PROJECT NAME: CRU2 RI PHASE II FIELD INVESTIGATION	
BORING NUMBER: 11007	COORDINATES: NORTH 478012.29 EAST 1378978.84	DATE:19-APR-93
GROUND ELEVATION: 575.5	GWL: Depth Date/Time	DATE STARTED: 19-APR-93
ENGINEER/GEOLOGIST: D O'BRIEN	Depth Date/Time	DATE COMPLETE: 21-APR-93
DRILLING METHOD: HOLLOW STEM AUGER		

DEPTH	SAMPLE	DATE TIME	BLOWS ON SAMPLE	RECOVERY INCHES		USCS SYMBOL	TSF	REMARKS
13.0 13.5		04/20/93 09:43	2	0	NO RECOVERY	N/A	N/A	
13.5 14.0	110665	04/20/93 09:56	3	6	BLACK (2.5Y, 2.5/1), FLYASH WITH MEDIUM COARSE SAND, TRACE OF FINE GRAVEL SLAG, DRY	N/A	N/A	PID=0 ppm BΓ=70 cpm
14.0 14.5		04/20/93 09:56	3	0	NO RECOVERY	N/A	N/A	
14.5 15.0		04/20/93 09:56	9	0	NO RECOVERY	N/A	N/A	
15.0 15.5	110666	04/20/93 10:06	12	6	0-4 FLYASH, 4-6 STIFF, (10YR, 4/6) DARK YELLOWISH BROWN, SANDY SILTY CLAY, TRACE ORANGE MOTTLES, LOW PLASTICITY, MOIST	CL	1.3	PID=0 ppm BΓ=60 cpm
15.5 16.0	110667	04/20/93 10:06	24	6	SAA, SOME HORIZONS HAVE INCREASED SILT CONTENT WHICH ARE WET	CL	1.3	PID=0 ppm BΓ=60 cpm
16.0 16.5	110668	04/20/93 10:06	26	6	SAA INCREASED FINE SAND CONTENT AT SOME HORIZONS	CL	1.5	PID=0 ppm BΓ=60 cpm
16.5 17.0	110669	04/20/93 10:40	30	6	HARD, (2.5Y, 7/6)YELLOW, CLAY SANDY SILT, MOIST, TRACE ROUNDED GRAVEL FINE TRACE COARSE SAND, POCKET MEDIUM SAND (WET)	ML	4.2	PID=0 ppm BΓ=60 cpm
17.0 17.5	110670	04/20/93 10:40	50	6	HARD, YELLOW (2.5Y,7/6), CLAY SANDY SILT, DRY, TRACE ROUNDED FINE GRAVEL, TRACE COARSE SAND	ML	4.5	PID=0 ppm BΓ=60 cpm
17.5 18.0		04/20/93 10:40	N/A	0	NO RECOVERY	N/A	N/A	
18.0 18.5	110672	04/20/93 13:20	18	6	VERY DENSE, (10YR, 4/6) DARK YELLOWISH BROWN, FINE SAND, POORLY GRADED, WET	SP	N/A	PID=0 ppm BΓ=90 cpm
18.5 19.0	110673	04/20/93 13:20	23	6	VERY STIFF, (10YR,4/6) DARK YELLOWISH BROWN, SANDY CLAY WITH GRAVEL, NO PLASTICITY, DRY	CL	3.5	PID=0 ppm BΓ=90 cpm
19.0 19.5	110674	04/20/93 13:20	34	6	SAA, HARD	CL	4	PID=0 ppm BΓ=90 cpm

NOTES:

Driller: JEFF BENTLEY, DAN JAMISON
Drilling Equipment: ACKER SENTRY

SAA = Same as Above
PID = Photoionization Detector
N/A = Not Applicable

PROJECT NUMBER: 20.03.05	PROJECT NAME: CRU2 RI PHASE II FIELD INVESTIGATION	
BORING NUMBER: 11007	COORDINATES: NORTH 478012.29 EAST 1378978.84	DATE:19-APR-93
GROUND ELEVATION: 575.5	GWL: Depth Date/Time	DATE STARTED: 19-APR-93
ENGINEER/GEOLOGIST: D O'BRIEN	Depth Date/Time	DATE COMPLETE: 21-APR-93
DRILLING METHOD: HOLLOW STEM AUGER		

DEPTH	SAMPLE	DATE TIME	BLOWS ON SAMPLE	RECOVERY INCHES		USCS SYMBOL	TSF	REMARKS
19.5 20.0	110675 04/20/93 13:45		18	6	VERY DENSE, (2.5Y,5/6) LIGHT OLIVE BROWN, CLAYEY SAND, WET	SC	N/A	PID=0 ppm BΓ=60 cpm
20.0 20.5	110676 04/20/93 13:45		24	6	HARD, (2.5Y,5/1) GRAY, SANDY CLAY, NO PLASTICITY, DRY	CL	4.5	PID=0 ppm BΓ=60 cpm
20.5 21.0		04/20/93 13:45	29	0	NO RECOVERY	N/A	N/A	
21.0 21.5	110677 04/20/93 14:25		30	5	HARD, (2.5Y,5/1) GRAY, GRAVELLY CLAY, NO PLASTICITY, DRY	CL	4.5	PID=0 ppm BΓ=60 cpm
21.5 22.0		04/20/93 14:25	50	0	NO RECOVERY	N/A	N/A	
22.0 22.5		04/20/93 14:25	N/A	0	NO RECOVERY	N/A	N/A	
22.5 23.0	110678 04/21/93 09:20		8	5	VERY STIFF, (2.5Y,5/1) GRAY, GRAVELLY CLAY, NO PLASTICITY, SLIGHTLY MOIST	CL	3	PID=0 ppm BΓ=60 cpm
23.0 23.5		04/21/93 09:20	12	0	NO RECOVERY	N/A	N/A	
23.5 24.0		04/21/93 09:20	14	0	NO RECOVERY	N/A	N/A	

NOTES:

Driller: JEFF BENTLEY, DAN JAMISON
Drilling Equipment: ACKER SENTRY

SAA = Same as Above
PID = Photoionization Detector
N/A = Not Applicable

0408

PROJECT NUMBER: 20.03.05	PROJECT NAME: CRU2 RI PHASE II FIELD INVESTIGATION	
BORING NUMBER: 11008	COORDINATES: NORTH 478026.26 EAST 1378945.73	DATE:02-MAY-93
GROUND ELEVATION: 577.8	GWL: Depth Date/Time	DATE STARTED: 03-MAY-93
ENGINEER/GEOLOGIST: D O'BRIEN	Depth Date/Time	DATE COMPLETE: 03-MAY-93
DRILLING METHOD: HOLLOW STEM AUGER		

DEPTH	SAMPLE	DATE TIME	BLOWS ON	SAMPLE	RECOVERY	INCHES		USCS SYMBOL	TSF	REMARKS
.5	116123	05/02/93 10:15	2		6		VERY LOOSE BLACK FLYASH WITH ORGANICS DRY	N/A	N/A	PID=0 ppm βΓ=40 cpm
1.0		05/02/93 10:16	2		0		NO RECOVERY	N/A	N/A	
1.5		05/02/93 10:16	2		0		NO RECOVERY	N/A	N/A	
2.0	116124	05/02/93 10:17	2		6		LOOSE, BLACK FLYASH WITH ORGANICS, DRY	N/A	N/A	PID=0 ppm βΓ=60 cpm
2.5	116125	05/02/93 10:17	3		5		SAA	N/A	N/A	PID=0 ppm βΓ=60 cpm
3.0		05/02/93 10:17	3		0		NO RECOVERY	N/A	N/A	
3.5	116126	05/02/93 10:20	3		6		LOOSE, BLACK FLYASH WITH GRAVEL AND ORGANICS, DRY	N/A	N/A	PID=0 ppm βΓ=60 cpm
4.0	116127	05/02/93 10:20	4		4		SAA	N/A	N/A	PID=0 ppm βΓ=60 cpm
4.5		05/02/93 10:20	4		0		NO RECOVERY	N/A	N/A	
5.0	116128	05/02/93 10:30	2		6		VERY LOOSE BLACK FLYASH, DRY	N/A	N/A	PID=0 ppm βΓ=60 cpm
5.5	116129	05/02/93 10:30	2		6		SAA	N/A	N/A	PID=0 ppm βΓ=60 cpm
6.0	116130	05/02/93 10:30	2		4		SAA	N/A	N/A	PID=0 ppm βΓ=60 cpm
6.5	116131	05/02/93 10:40	1		6		VERY LOOSE BLACK FLYASH WITH ORGANICS, DRY	N/A	N/A	PID=0 ppm βΓ=60 cpm

NOTES:

Boring Contractor: PENNSYLVANIA DRILLING CO.
Driller: MARTY WATRAL, BILL SEBERT
Drilling Equipment: ACKER SENTRY

SAA = Same as Above
PID = Photoionization Detector
N/A = Not Applicable

0409

PROJECT NUMBER: 20.03.05	PROJECT NAME: CRU2 RI PHASE II FIELD INVESTIGATION	
BORING NUMBER: 11008	COORDINATES: NORTH 478026.26 EAST 1378945.73	DATE:02-MAY-93
GROUND ELEVATION: 577.8	GWL: Depth Date/Time	DATE STARTED: 03-MAY-93
ENGINEER/GEOLOGIST: D O'BRIEN	Depth Date/Time	DATE COMPLETE: 03-MAY-93
DRILLING METHOD: HOLLOW STEM AUGER		

DEPTH	SAMPLE	DATE TIME	BLOWS ON SAMPLE	RECOVERY INCHES		USCS SYMBOL	TSF	REMARKS
6.5 7.0	116132 05/02/93 10:40		2	6	SAA	N/A	N/A	PID=0 ppm βΓ=60 cpm
7.0 7.5		05/02/93 10:40	2	0	NO RECOVERY	N/A	N/A	
7.5 8.0	116133 05/02/93 10:45		2	6	VERY LOOSE BLACK FLYASH WITH ORGANICS, DRY	N/A	N/A	PID=0 ppm βΓ=80 cpm
8.0 8.5	116134 05/02/93 10:45		2	6	SAA	N/A	N/A	PID=0 ppm βΓ=80 cpm
8.5 9.0		05/02/93 10:45	2	0	NO RECOVERY	N/A	N/A	
9.0 9.5	116135 05/02/93 10:50		1	6	VERY LOOSE BLACK FLYASH, DRY	N/A	N/A	PID=0 ppm βΓ=100 cpm
9.5 10.0	116136 05/02/93 10:50		2	4	SAA	N/A	N/A	PID=0 ppm βΓ=100 cpm
10.0 10.5		05/02/93 10:50	2	0	NO RECOVERY	N/A	N/A	
10.5 11.0	116137 05/02/93 10:55		1	6	VERY LOOSE, BLACK FLYASH, DRY	N/A	N/A	PID=0 ppm βΓ=60 cpm
11.0 11.5	116138 05/02/93 10:55		2	6	SAA	N/A	N/A	PID=0 ppm βΓ=60 cpm
11.5 12.0		05/02/93 10:55	2	0	NO RECOVERY	N/A	N/A	
12.0 12.5	116139 05/02/93 11:05		1	6	VERY LOOSE BLACK FLYASH, DRY	N/A	N/A	PID=0 ppm βΓ=40 cpm
12.5 13.0	116140 05/02/93 11:05		2	6	SAA	N/A	N/A	PID=0 ppm βΓ=40 cpm

NOTES:

Boring Contractor: PENNSYLVANIA DRILLING CO.
Driller: MARTY WATRAL, BILL SEBERT
Drilling Equipment: ACKER SENTRY

SAA = Same as Above
PID = Photoionization Detector
N/A = Not Applicable

0410

PROJECT NUMBER: 20.03.05	PROJECT NAME: CRU2 RI PHASE II FIELD INVESTIGATION	
BORING NUMBER: 11008	COORDINATES: NORTH 478026.26 EAST 1378945.73	DATE:02-MAY-93
GROUND ELEVATION: 577.8	GWL: Depth Date/Time	DATE STARTED: 03-MAY-93
ENGINEER/GEOLOGIST: D O'BRIEN	Depth Date/Time	DATE COMPLETE: 03-MAY-93
DRILLING METHOD: HOLLOW STEM AUGER		

DEPTH	SAMPLE	DATE TIME	BLOWS ON SAMPLE	RECOVERY INCHES		USCS SYMBOL	TSF	REMARKS
13.0 13.5	116141	05/02/93 11:05	2	6	SAA	N/A	N/A	PID=0 ppm βΓ=40 cpm
13.5 14.0	116142	05/02/93 13:15	1	6	SAA	N/A	N/A	PID=0 ppm βΓ=40 cpm
14.0 14.5	116143	05/02/93 13:15	1	6	SAA	N/A	N/A	PID=0 ppm βΓ=40 cpm
14.5 15.0		05/02/93 13:15	1	0	NO RECOVERY	N/A	N/A	
15.0 15.5	116144	05/02/93 13:20	1	6	VERY LOOSE BLACK FLYASH, DRY	N/A	N/A	PID=0 ppm βΓ=40 cpm
15.5 16.0	116145	05/02/93 13:20	1	6	SAA	N/A	N/A	PID=0 ppm βΓ=40 cpm
16.0 16.5	116146	05/02/93 13:20	2	3	SAA	N/A	N/A	PID=0 ppm βΓ=40 cpm
16.5 17.0	116147	05/02/93 13:25	1	6	SAA	N/A	N/A	PID=0 ppm βΓ=60 cpm
17.0 17.5	116148	05/02/93 13:25	2	6	SAA	N/A	N/A	PID=0 ppm βΓ=60 cpm
17.5 18.0	116149	05/02/93 13:25	3	6	FIRST 3", SAA (LAST 3 ") HARD (2.5Y, 5/6) LIGHT OLIVE BROWN GRAVELLY CLAY, NO PLASTICITY, DRY	CL	4	PID=0 ppm βΓ=60 cpm
18.0 18.5	116150	05/02/93 13:40	10	6	VERY STIFF (2.5Y, 4/4) OLIVE BROWN GRAVELLY CLAY, NO PLASTICITY, SLIGHTLY MOIST	CL	2.5	PID=0 ppm βΓ=40 cpm
18.5 19.0	116151	05/02/93 13:40	12	5	HARD (2.5Y, 5/6) LIGHT, OLIVE BROWN CLAY WITH FINE SAND AND GRAVEL, NO PLASTICITY, DRY	CL	4.5	PID=0 ppm βΓ=40 cpm
19.0 19.5		05/02/93 13:45	15	0	NO RECOVERY	N/A	N/A	

NOTES:

Boring Contractor: PENNSYLVANIA DRILLING CO.
Driller: MARTY WATRAL, BILL SEBERT
Drilling Equipment: ACKER SENTRY

SAA = Same as Above
PID = Photoionization Detector
N/A = Not Applicable

0411

PROJECT NUMBER: 20.03.05	PROJECT NAME: CRU2 RI PHASE II FIELD INVESTIGATION	
BORING NUMBER: 11008	COORDINATES: NORTH 478026.26 EAST 1378945.73	DATE:02-MAY-93
GROUND ELEVATION: 577.8	GWL: Depth Date/Time	DATE STARTED: 03-MAY-93
ENGINEER/GEOLOGIST: D O'BRIEN	Depth Date/Time	DATE COMPLETE: 03-MAY-93
DRILLING METHOD: HOLLOW STEM AUGER		

DEPTH	SAMPLE	DATE TIME	BLOWS ON	SAMPLE	RECOVERY	INCHES		USCS SYMBOL	TSF	REMARKS
19.5 20.0	116152	05/02/93 13:50	7		6		VERY STIFF (2.5Y, 6/6) OLIVE YELLOW SILTY CLAY WITH FINE SAND, NO PLASTICITY, DRY	CL	2	PID=0 ppm βΓ=40 cpm
20.0 20.5	116153	05/02/93 13:50	9		5		VERY STIFF (2.5Y, 5/3) LIGHT, OLIVE BROWN SILTY CLAY WITH GRAVEL, NO PLASTICITY, GRADING MOIST TO DRY	CL	3	PID=0 ppm βΓ=40 cpm
20.5 21.0		05/02/93 13:50	17		0		NO RECOVERY	N/A	N/A	
21.0 21.5	116154	05/02/93 14:00	3		6		VERY STIFF (2.5Y, 5/3) LIGHT OLIVE BROWN, GRAVELLY CLAY WITH SAND, NO PLASTICITY, DRY	CL	3	PID=0 ppm βΓ=60 cpm
21.5 22.0	116155	05/02/93 14:00	10		6		MEDIUM DENSE (2.5Y, 5/6) LIGHT OLIVE BROWN, MEDIUM TO COARSE GRAINED SAND, POORLY GRADED, DRY	SP	N/A	PID=0 ppm βΓ=60 cpm
22.0 22.5		05/02/93 14:00	11		0		NO RECOVERY	N/A	N/A	

NOTES:

Boring Contractor: PENNSYLVANIA DRILLING CO.
Driller: MARTY WATRAL, BILL SEBERT
Drilling Equipment: ACKER SENTRY

SAA = Same as Above
PID = Photoionization Detector
N/A = Not Applicable

PROJECT NUMBER: 20.03.05	PROJECT NAME: CRU2 RI PHASE II FIELD INVESTIGATION	
BORING NUMBER: 11047	COORDINATES: NORTH 478314.61 EAST 1378995.55	DATE:16-MAY-93
GROUND ELEVATION: 566.2	GWL: Depth Date/Time	DATE STARTED: 16-MAY-93
ENGINEER/GEOLOGIST: J BOYER	Depth Date/Time	DATE COMPLETE: 16-MAY-93

DRILLING METHOD: HOLLOW STEM AUGER

DEPTH	SAMPLE DATE TIME	BLOWS ON SAMPLE	RECOVERY INCHES		USCS SYMBOL	TSF	REMARKS
4.0	05/16/93 08:30	N/A	N/A	DESTRUCTIVE DRILLING	N/A	N/A	
4.0 5.5	116316 05/16/93 08:50	10 13 11	15	MEDIUM DENSE (2.5Y, 5/4) CLAYEY SILT, LOW PLASTICITY, MOIST	ML	N/A	PID=.8 ppm BG=40 cpm
5.5 7.0	05/16/93 09:00	6 7 9	18	MEDIUM DENSE (2.5Y, 4.4) OLIVE BROWN, CLAYEY SILT, LOW PLASTICITY	ML	N/A	PID=.8 ppm BG=40 cpm
7.0 8.0	116317 05/16/93 09:15	7 5 8	14	MEDIUM DENSE (2.5Y, 5/3) LIGHT OLIVE BROWN, SILTY SAND, MOIST	SM	N/A	PID=.8 ppm BG=40 cpm
8.0 8.5	116317 05/16/93 09:15	N/A	N/A	MEDIUM DENSE (2.5Y, 5/6) LIGHT OLIVE BROWN, POORLY GRADED SAND, WET	SP	N/A	PID=.8 ppm BG=40 cpm
8.5 10.0	05/16/93 10:00	7 6 19	N/A	NO RECOVERY	N/A	N/A	
10.0 12.0	116318 05/16/93 10:15	N/A	N/A	HYDROPUNCH	N/A	N/A	

NOTES:

Driller: JOE RAAB, ROGER DAVIS

SAA = Same as Above
PID = Photoionization Detector
N/A = Not Applicable

02/02/94 16:35

PROJECT NUMBER: 20.03.05	PROJECT NAME: CRU2 RI PHASE II FIELD INVESTIGATION	
BORING NUMBER: 11048	COORDINATES: NORTH 478159.21 EAST 1378974.60	DATE:21-MAY-93
GROUND ELEVATION: 577.5	GWL: Depth - Date/Time	DATE STARTED: 21-MAY-93
ENGINEER/GEOLOGIST: J BOYER	Depth Date/Time	DATE COMPLETE: 26-MAY-93
DRILLING METHOD: HOLLOW STEM AUGER		

DEPTH	SAMPLE	DATE TIME	BLOWS ON SAMPLE	RECOVERY INCHES		USCS SYMBOL	TSF	REMARKS
.5		05/25/93 13:45	6	6	DENSE, (2.5Y, 5/6) LIGHT OLIVE BROWN, CLAYEY SILT, WITH GRAVEL, SLIGHTLY PLASTIC, DRY	ML	N/A	PID=.4 ppm βΓ=80 cpm
.5 1.0		05/25/93 00:00	11	6	SAA	ML	N/A	PID=.4 ppm βΓ=80 cpm
1.0 1.5	116342	05/25/93 13:45	13	6	DENSE, (2.5Y, 5/6) LIGHT OLIVE BROWN, CLAYEY SILT, 50% GRAVEL, (1200 CPM ON FRISHER) NO PLASTICITY, DRY	ML GC	N/A	PID=.4 ppm βΓ=1200 cpm
1.5 2.0		05/25/93 00:00	24	5	(10YR, 21) BLACK, FLYASH WITH GRAVEL, DRY	N/A	N/A	PID=.4 ppm βΓ=80 cpm
2.0 2.5		05/25/93 00:00	5	6	VERY STIFF, (2.5Y, 5/6) LIGHT OLIVE BROWN, SILTY CLAY WITH FLYASH AND GRAVEL, LOW PLASTICITY, DRY	CL	3.5	PID=1 ppm βΓ=100 cpm
2.5 3.0		05/25/93 00:00	6	6	SAA	CL	3	PID=1 ppm βΓ=100 cpm
3.0 3.5		05/25/93 00:00	6	6	VERY STIFF, (2.5Y, 5/6) LIGHT OLIVE BROWN, SILTY CLAY WITH GRAVEL AND FLYASH STRINGER, LOW PLASTICITY, DRY	CL	2	PID=1 ppm βΓ=100 cpm
3.5 4.0		05/25/93 00:00	8	4	(10YR, 2/1) BLACK, FLYASH WITH GRAVEL, DRY	N/A	N/A	PID=1 ppm βΓ=100 cpm
4.0 4.5		05/25/93 00:00	9	6	STIFF, (2.5Y, 6/4) LIGHT YELLOWISH BROWN, SILTY CLAY WITH GRAVEL AND FLYASH, LOW PLASTICITY, DRY	CL	1	PID=1 ppm βΓ=80 cpm
4.5 5.0		05/25/93 00:00	11	6	SAA	CL	1	PID=1 ppm βΓ=80 cpm
5.0 5.5		05/25/93 00:00	11	6	(10YR, 2/1) BLACK, FLYASH, DRY	N/A	N/A	PID=1 ppm βΓ=80 cpm
5.5 6.0		05/25/93 00:00	13	5	SAA	N/A	N/A	PID=1 ppm βΓ=80 cpm
6.0 6.5		05/25/93 00:00	1	6	SAA	N/A	N/A	PID=1.5 ppm βΓ=80 cpm

NOTES:

Boring Contractor: PENNSYLVANIA DRILLING
Driller: MIKE BENTLEY
Drilling Equipment: ACKER

SAA = Same as Above
PID = Photoionization Detector
N/A = Not Applicable

0414

PROJECT NUMBER: 20.03.05	PROJECT NAME: CRU2 RI PHASE II FIELD INVESTIGATION	
BORING NUMBER: 11048	COORDINATES: NORTH 478159.21 EAST 1378974.60	DATE:21-MAY-93
GROUND ELEVATION: 577.5	GWL: Depth Date/Time	DATE STARTED: 21-MAY-93
ENGINEER/GEOLOGIST: J BOYER	Depth Date/Time	DATE COMPLETE: 26-MAY-93
DRILLING METHOD: HOLLOW STEM AUGER		

DEPTH	SAMPLE DATE TIME	BLOWS ON SAMPLE	RECOVERY INCHES		USCS SYMBOL	TSF	REMARKS
6.5 7.0	05/25/93 00:00	1	6	SAA	N/A	N/A	PID=1.5 ppm βΓ=80 cpm
7.0 7.5	05/25/93 00:00	1	6	SAA	N/A	N/A	PID=1.5 ppm βΓ=80 cpm
7.5 8.0	05/25/93 00:00	N/A	0	NO RECOVERY	N/A	N/A	
8.0 8.5	05/25/93 00:00	2	6	(10YR, 2/1) BLACK, FLYASH, MOIST	N/A	N/A	PID=1.6 ppm βΓ=80 cpm
8.5 9.0	05/25/93 00:00	3	6	SAA	N/A	N/A	PID=1.6 ppm βΓ=80 cpm
9.0 9.5	05/25/93 00:00	3	6	SAA	N/A	N/A	PID=1.6 ppm βΓ=80 cpm
9.5 10.0	05/25/93 00:00	6	5	SAA	N/A	N/A	PID=1.6 ppm βΓ=80 cpm
10.0 10.5	05/25/93 00:00	1	6	SAA	N/A	N/A	PID=1.5 ppm βΓ=60 cpm
10.5 11.0	05/25/93 00:00	2	6	SAA	N/A	N/A	PID=1.5 ppm βΓ=60 cpm
11.0 11.5	05/25/93 00:00	4	6	SAA	N/A	N/A	PID=1.5 ppm βΓ=60 cpm
11.5 12.0	05/25/93 00:00	13	3	VERY STIFF, (5Y, 4/4) OLIVE, SILTY CLAY TRACE GRAVEL AND FLYASH, LOW PLASTICITY, MOIST	CL	2.25	PID=1.5 ppm βΓ=60 cpm
12.0 12.5	05/25/93 00:00	6	6	VERY STIFF, (5Y, 5/3) OLIVE, SILTY CLAY, TRACE GRAVEL, LOW PLASTICITY, MOIST	CL	2	PID=1.5 ppm βΓ=60 cpm
12.5 13.0	05/25/93 00:00	9	6	STIFF, (5Y, 5/3) OLIVE, SILTY CLAY, TRACE WOOD, (APPEARS TO BE ROOT MATERIAL, LOW PLASTICITY, MOIST	CL	1.5	PID=1.5 ppm βΓ=60 cpm

NOTES:

Boring Contractor: PENNSYLVANIA DRILLING
Driller: MIKE BENTLEY
Drilling Equipment: ACKER

SAA = Same as Above
PID = Photoionization Detector
N/A = Not Applicable

0415

5174 02/02/94 16:35

PROJECT NUMBER: 20.03.05	PROJECT NAME: CRU2 RI PHASE II FIELD INVESTIGATION	
BORING NUMBER: 11048	COORDINATES: NORTH 478159.21 EAST 1378974.60	DATE:21-MAY-93
GROUND ELEVATION: 577.5	GWL: Depth Date/Time	DATE STARTED: 21-MAY-93
ENGINEER/GEOLOGIST: J BOYER	Depth Date/Time	DATE COMPLETE: 26-MAY-93
DRILLING METHOD: HOLLOW STEM AUGER		

DEPTH	SAMPLE DATE TIME	BLOWS ON SAMPLE	RECOVERY INCHES		USCS SYMBOL	TSF	REMARKS
13.0 13.5	05/25/93 00:00	9	6	SAA	CL	2	PID=1.5 ppm BΓ=60 cpm
13.5 14.0	05/25/93 00:00	17	4	MEDIUM DENSE, (5Y, 5/2) OLIVE GRAY, SILT TRACE ROOT MATERIAL, MOIST	ML	N/A	PID=1.5 ppm BΓ=60 cpm
14.0 14.5	05/25/93 00:00	8	6	MEDIUM DENSE, (5Y, 4/2) OLIVE GRAY, SILT WITH ROOT AND GRASS MATERIAL, MOIST	ML	N/A	PID=1.5 ppm BΓ=40 cpm
14.5 15.0	05/25/93 00:00	11	6	SAA	ML	N/A	PID=1.5 ppm BΓ=40 cpm
15.0 15.5	05/25/93 00:00	11	6	MEDIUM DENSE, (5Y, 4/2) OLIVE GRAY, SILT WITH ROOT AND GRASSES, MOIST	ML	N/A	PID=1.5 ppm BΓ=40 cpm
15.5 16.0	05/25/93 00:00	10	6	SAA	ML	N/A	PID=1.5 ppm BΓ=40 cpm
16.0 16.5	05/25/93 00:00	6	6	MEDIUM DENSE, (5Y, 4/2) OLIVE GRAY, CLAYEY SILT WITH ROOT AND GRASS MATERIAL, MOIST	ML	N/A	PID=1.6 ppm BΓ=40 cpm
16.5 17.0	05/25/93 00:00	9	6	SAA	ML	N/A	PID=1.6 ppm BΓ=40 cpm
17.0 17.5	05/25/93 00:00	9	6	SAA	ML	N/A	PID=1.6 ppm BΓ=40 cpm
17.5 18.0	05/25/93 00:00	10	4	SAA	ML	N/A	PID=1.6 ppm BΓ=40 cpm
18.0 18.5	05/25/93 00:00	3	6	MEDIUM DENSE, (5Y, 4/3) OLIVE, CLAYEY SILT WITH TRACE ORGANICS MATERIAL, ALSO CONTAINED BURNT WOOD, MOIST	ML	N/A	PID=2.2 ppm BΓ=60 cpm
18.5 19.0	05/25/93 00:00	6	6	MEDIUM DENSE, (5Y, 4/3) OLIVE, CLAYEY SILT, TRACE ROOT MATERIAL, MOIST	ML	N/A	PID=2.2 ppm BΓ=60 cpm
19.0 19.5	05/25/93 00:00	7	6	MEDIUM DENSE, (5Y, 4/2) OLIVE GRAY, CLAYEY SILT, SLIGHT PLASTICITY, MOIST	ML	N/A	PID=2.2 ppm BΓ=60 cpm

NOTES:

Boring Contractor: PENNSYLVANIA DRILLING
Driller: MIKE BENTLEY
Drilling Equipment: ACKER

SAA = Same as Above
PID = Photoionization Detector
N/A = Not Applicable

0416

PROJECT NUMBER: 20.03.05	PROJECT NAME: CRU2 RI PHASE II FIELD INVESTIGATION	
BORING NUMBER: 11048	COORDINATES: NORTH 478159.21 EAST 1378974.60	DATE:21-MAY-93
GROUND ELEVATION: 577.5	GWL: Depth Date/Time	DATE STARTED: 21-MAY-93
ENGINEER/GEOLOGIST: J BOYER	Depth Date/Time	DATE COMPLETE: 26-MAY-93

DRILLING METHOD: HOLLOW STEM AUGER

DEPTH	SAMPLE	DATE TIME	BLOWS ON SAMPLE	RECOVERY	INCHES		USCS SYMBOL	TSF	REMARKS
19.5 20.0		05/25/93 00:00	10	5	SAA		ML	N/A	PID=2.2 ppm βΓ=60 cpm
20.0 20.5		05/25/93 00:00	9	6	SAA		ML	N/A	PID=1.8 ppm βΓ=60 cpm
20.5 21.0		05/25/93 00:00	9	6	SAA		ML	N/A	PID=1.8 ppm βΓ=60 cpm
21.0 21.5	116343 116344 116345 116346	05/25/93 16:20	12	6	MEDIUM DENSE, (5Y, 4/3) OLIVE, SILTY SAND WITH CLAY, WET		SM	N/A	PID=1.8 ppm βΓ=60 cpm
21.5 22.0	116343 116344 116345 116346	05/25/93 16:20	N/A 14	6	MEDIUM DENSE, (5YM 5.4) OLIVE, SILTY SAND, WET		SM	N/A	PID=1.8 ppm βΓ=60 cpm
22.0 24.0	116351	05/25/93 10:15	N/A	N/A	HYDROPUNCH		N/A	N/A	
24.0 24.5		05/25/93 00:00	50	5	HARD, (5Y, 4/2) OLIVE GRAY, SILTY CLAY, TRACE GRAVEL, LOW PLASTICITY, MOIST		CL	4.5	PID=.6 ppm βΓ=60 cpm
24.5 25.0		05/25/93 00:00	80	0	NO RECOVERY		N/A	N/A	
25.0 25.5		05/25/93 12:00	N/A	0	SPLIT SPOON REFUSAL		N/A	N/A	
25.5 26.0		05/25/93 00:00	N/A	0	SPLIT SPOON REFUSAL		N/A	N/A	
26.0 26.5	116347 116348 116349 116350	05/25/93 14:40	8	6	VERY DENSE, (2.5Y, 5/4) LIGHT OLIVE BROWN, POORLY GRADED SAND, MOIST		SP	N/A	PID=.5 ppm βΓ=40 cpm

NOTES:

Boring Contractor: PENNSYLVANIA DRILLING
Driller: MIKE BENTLEY
Drilling Equipment: ACKER

SAA = Same as Above
PID = Photoionization Detector
N/A = Not Applicable

0417

PROJECT NUMBER: 20.03.05	PROJECT NAME: CRU2 RI PHASE II FIELD INVESTIGATION	
BORING NUMBER: 11048	COORDINATES: NORTH 478159.21 EAST 1378974.60	DATE:21-MAY-93
GROUND ELEVATION: 577.5	GWL: Depth Date/Time	DATE STARTED: 21-MAY-93
ENGINEER/GEOLOGIST: J BOYER	Depth Date/Time	DATE COMPLETE: 26-MAY-93
DRILLING METHOD: HOLLOW STEM AUGER		

DEPTH	SAMPLE	DATE TIME	BLOWS ON	SAMPLE	RECOVERY	INCHES		USCS SYMBOL	TSF	REMARKS
26.5 27.0	116347 116348 116349 116350	05/25/93 14:40	19		6		SAA	SP	N/A	PID=.5 ppm BΓ=40 cpm
27.0 27.5	116347 116348 116349 116350	05/25/93 14:40	32		6		SAA	SP	N/A	PID=.5 ppm BΓ=40 cpm
27.5 28.0		05/25/93 00:00	34		0		NO RECOVERY	N/A	N/A	

NOTES:

Boring Contractor: PENNSYLVANIA DRILLING
Driller: MIKE BENTLEY
Drilling Equipment: ACKER

SAA = Same as Above
PID = Photoionization Detector
N/A = Not Applicable

0418

PROJECT NUMBER: 20.03.05	PROJECT NAME: CRU2 RI PHASE II FIELD INVESTIGATION	
BORING NUMBER: 11049	COORDINATES: NORTH 478207.49 EAST 1379013.23	DATE:27-MAY-93
GROUND ELEVATION: 567	GWL: Depth Date/Time	DATE STARTED: 27-MAY-93
ENGINEER/GEOLOGIST: T LAYNE, J BOYE	Depth Date/Time	DATE COMPLETE: 28-MAY-93
DRILLING METHOD: HOLLOW STEM AUGER		

DEPTH	SAMPLE DATE TIME	BLOWS ON SAMPLE	RECOVERY INCHES		USCS SYMBOL	TSF	REMARKS
.5	05/27/93 00:00	4	6	(2.5Y, 4/2) DARK GRAYISH BROWN, CLAYEY SILT, PLANT MATERIAL, DRY	ML	1.7	PID=0 ppm βΓ=20 cpm
.5 1.0	05/27/93 00:00	6	6	(2.5Y, 4/2) DARK GRAYISH BROWN, CLAYEY SILT, PLANT MATERIAL, MOIST	ML	1.7	PID=0 ppm βΓ=20 cpm
1.0 1.5	05/27/93 00:00	8	6	(2.5Y, 5/4) LIGHT OLIVE BROWN, SILTY CLAY, PLANT MATERIAL, MOIST	CL	2.25	PID=0 ppm βΓ=20 cpm
1.5 2.0	05/27/93 00:00	9	6	SAA	CL	2.25	PID=0 ppm βΓ=20 cpm
2.0 2.5	05/27/93 00:00	8	6	(2.5Y, 5/4) LIGHT OLIVE BROWN, SILTY CLAY, MOIST	CL	2.75	PID=0 ppm βΓ=20-30 cpm
2.5 3.0	05/27/93 00:00	11	6	SAA	CL	1.35	PID=0 ppm βΓ=20-30 cpm
3.0 3.5	05/27/93 00:00	10	6	SAA	CL	.9	PID=0 ppm βΓ=20-30 cpm
3.5 4.0	05/27/93 00:00	13	6	(2.5Y, 5/4) LIGHT OLIVE BROWN, SILTY CLAY, VERY MOIST	CL	.5	PID=0 ppm βΓ=20-30 cpm
4.0 4.5	05/27/93 00:00	3	6	(2.5Y, 5/4) LIGHT OLIVE BROWN, SILTY CLAY, VERY MOIST	CL	0	PID=0 ppm βΓ=40 - 80 cpm
4.5 5.0	05/27/93 00:00	3	6	SAA	CL	0	PID=0 ppm βΓ=40 - 80 cpm
5.0 5.5	05/27/93 00:00	2	6	(2.5Y, 5/3) LIGHT OLIVE BROWN, SILTY CLAY, WET	CL	0	PID=0 ppm βΓ=40 - 80 cpm
5.5 6.0	05/27/93 00:00	3	6	SAA	CL	0	PID=0 ppm βΓ=40 - 80 cpm
6.0 6.5	05/27/93 00:00	1	6	(2.5Y, 5/4) LIGHT OLIVE BROWN, SILTY CLAY, MOIST TO WET	CL	0	PID=0 ppm βΓ=40 - 80 cpm

NOTES:
BACKGROUND: BETA GAMMA=40-80CPM/HNU=0PPM

Boring Contractor: PENNSYLVANIA DRILLING CO

SAA = Same as Above
PID = Photoionization Detector
N/A = Not Applicable

0419

PROJECT NUMBER: 20.03.05	PROJECT NAME: CRU2 RI PHASE II FIELD INVESTIGATION	
BORING NUMBER: 11049	COORDINATES: NORTH 478207.49 EAST 1379013.23	DATE:27-MAY-93
GROUND ELEVATION: 567	GWL: Depth Date/Time	DATE STARTED: 27-MAY-93
ENGINEER/GEOLOGIST: T LAYNE, J BOYE	Depth Date/Time	DATE COMPLETE: 28-MAY-93
DRILLING METHOD: HOLLOW STEM AUGER		

DEPTH	SAMPLE DATE TIME	BLOWS ON SAMPLE	RECOVERY INCHES		USCS SYMBOL	TSF	REMARKS
6.5 7.0	116352 116353 116354 116355 05/27/93 00:00	2	6	SAA	CL	0	PID=0 ppm BΓ=40 - 80 cpm
7.0 7.5	116352 116353 116354 116355 05/27/93 16:30	2	6	(2.5Y, 5/4) LIGHT OLIVE BROWN, SAND CLAY, WET	CL	0	PID=0 ppm BΓ=40 - 80 cpm
7.5 8.0	116352 116353 116354 116355 05/27/93 16:30	10	6	(2.5Y, 5/4) LIGHT OLIVE BROWN, CLAYEY SAND, VERY WET	SC	0	PID=0 ppm BΓ=40 - 80 cpm
8.0 11.5	116356 05/28/93 09:30	N/A	N/A	HYDROPUNCH	N/A	N/A	
11.0 11.5	116357 116358 05/28/93 10:45	2	5.5	(2.5Y, 5/3) LIGHT OLIVE BROWN, CLAY, TRACE SMALL SUBROUNDED PEBBLES, WET	CL	0	PID=0 ppm BΓ=40 - 80 cpm
11.5 12.0	116359 116360 05/28/93 10:45	8	6	(2.5Y, 5/1) GRAY, CLAY TRACE SMALL SUB-ROUNDED PEBBLES, MOIST	CL	1.25	PID=0 ppm BΓ=86 cpm
12.0 12.5	116357 116358 116359 116360 05/28/93 00:00	28	5.5	(2.5Y, 5/1) GRAY CLAY, SAA	CL	0	PID=0 ppm BΓ=86 cpm
12.5 13.0	116357 116358 116359 116360 05/28/93 00:00	N/A 26	0	NO RECOVERY	N/A	N/A	

NOTES:
BACKGROUND: BETA GAMMA=40-80CPM/HNU=0PPM

Boring Contractor: PENNSYLVANIA DRILLING CO

SAA = Same as Above
PID = Photoionization Detector
N/A = Not Applicable

0420

PROJECT NUMBER: 20.03.05	PROJECT NAME: CRU2 RI PHASE II FIELD INVESTIGATION	
BORING NUMBER: 11050	COORDINATES: NORTH 478172.18 EAST 1378937.21	DATE:03-JUN-93
GROUND ELEVATION: 570	GWL: Depth Date/Time	DATE STARTED: 03-JUN-93
ENGINEER/GEOLOGIST: J REAGAN	Depth Date/Time	DATE COMPLETE: 07-JUN-93
DRILLING METHOD: HOLLOW STEM AUGER		

DEPTH	SAMPLE DATE TIME	BLOWS ON SAMPLE	RECOVERY INCHES		USCS SYMBOL	TSF	REMARKS
.5	06/03/93 00:00	2	6	BLACK FLYASH	N/A	N/A	PID=2 ppm βΓ=60 cpm
.5 1.0	06/03/93 00:00	2	4	10YR, 2/1, DRY	N/A	N/A	PID=2.0 ppm βΓ=60 cpm
1.0 1.5	06/03/93 00:00	2	0	NO RECOVERY (INFERRED FROM BORING LOG)	N/A	N/A	
1.5 2.0	06/03/93 00:00	2	0	NO RECOVERY (INFERRED FROM BORING LOG)	N/A	N/A	
2.0 2.5	06/03/93 00:00	2	6	(10YR, 2/1), DRY	N/A	N/A	PID=1.5 ppm βΓ=60 cpm
2.5 3.0	06/03/93 00:00	1	6	SAA	N/A	N/A	PID=1.5 ppm βΓ=60 cpm
3.0 3.5	06/03/93 00:00	1	2	SAA	N/A	N/A	PID=1.5 ppm βΓ=60 cpm
3.5 4.0	06/03/93 00:00	3	0	NO RECOVERY (INFERRED FROM BORING LOG)	N/A	N/A	
4.0 4.5	06/03/93 00:00	1	6	(10YR, 2/1), DRY	N/A	N/A	PID=1.5 ppm βΓ=80 cpm
4.5 5.0	06/03/93 00:00	1	2	SAA	N/A	N/A	PID=1.5 ppm βΓ=80 cpm
5.0 5.5	06/03/93 00:00	1	0	NO RECOVERY (INFERRED FROM BORING LOG)	N/A	N/A	
5.5 6.0	06/03/93 00:00	1	0	NO RECOVERY (INFERRED FROM BORING LOG)	N/A	N/A	
6.0 6.5	06/03/93 00:00	3	6	(10YR, 2/1) DRY	N/A	N/A	PID=1.5 ppm βΓ=80 cpm

NOTES:

Boring Contractor: PENNSYLVANIA DRILLING
Driller: JOE RAAB, ROGER DAVIS
Drilling Equipment: ACKER SOIL SENTRY

SAA = Same as Above
PID = Photoionization Detector
N/A = Not Applicable

5TF4 02/02/94 16:35

PROJECT NUMBER: 20.03.05	PROJECT NAME: CRU2 RI PHASE II FIELD INVESTIGATION	
BORING NUMBER: 11050	COORDINATES: NORTH 478172.18 EAST 1378937.21	DATE:03-JUN-93
GROUND ELEVATION: 570	GWL: Depth Date/Time	DATE STARTED: 03-JUN-93
ENGINEER/GEOLOGIST: J REAGAN	Depth Date/Time	DATE COMPLETE: 07-JUN-93
DRILLING METHOD: HOLLOW STEM AUGER		

DEPTH	SAMPLE	DATE TIME	BLOWS ON	SAMPLE	RECOVERY	INCHES		USCS SYMBOL	TSF	REMARKS
6.5 7.0		06/03/93 00:00	5		6		VERY STIFF, (10YR, 5/4), SILTY CLAY	CL	2.0	PID=1.5 ppm BΓ=80 cpm
7.0 7.5		06/03/93 00:00	11		6		LOW PLASTICITY, MOIST	CL	2.0	PID=1.5 ppm BΓ=80 cpm
7.5 8.0		06/03/93 00:00	13		6		VERY STIFF, (10YR, 5/4), SILTY CLAY, LOW PLASTICITY, MOIST	CL	2.0	PID=1.5 ppm BΓ=80 cpm
8.0 8.5		06/03/93 00:00	6		6		SAA	CL	2.5	PID=1.5 ppm BΓ=80 cpm
8.5 9.0		06/03/93 00:00	9		0		NO RECOVERY (INFERRED FROM BORING LOG)	N/A	N/A	
9.0 9.5		06/03/93 00:00	11		0		NO RECOVERY (INFERRED FROM BORING LOG)	N/A	N/A	
9.5 10.0		06/03/93 00:00	19		0		NO RECOVERY (INFERRED FROM BORING LOG)	N/A	N/A	
10.0 10.5	116450	06/03/93 16:15	3		6		VERY STIFF, (10YR, 4/4) SILTY FINE SAND, LOW PLASTICITY, VERY MOIST	ML	2.0	PID=1.5 ppm BΓ=60-80 cpm
10.5 11.0	116451	06/03/93 16:15	5		6		SAA	ML	2.0	PID=1.5 ppm BΓ=60-80 cpm
11.0 11.5	116452	06/03/93 16:15	5		6		SAA	ML	2.0	PID=1.5 ppm BΓ=60-80 cpm
11.5 12.0	116453	06/03/93 16:15	15		6		SAA	ML	2.0	PID=1.5 ppm BΓ=60-80 cpm
12.0 12.5		06/03/93 00:00	5		6		SAA	ML	2.5	PID=1.5 ppm BΓ=60 cpm
12.5 13.0		06/03/93 00:00	7		6		SAA	ML	2.5	PID=1.5 ppm BΓ=60 cpm

NOTES:

Boring Contractor: PENNSYLVANIA DRILLING
Driller: JOE RAAB, ROGER DAVIS
Drilling Equipment: ACKER SOIL SENTRY

SAA = Same as Above
PID = Photoionization Detector
N/A = Not Applicable

0422

5174

PROJECT NUMBER: 20.03.05	PROJECT NAME: CRU2 RI PHASE II FIELD INVESTIGATION	
BORING NUMBER: 11050	COORDINATES: NORTH 478172.18 EAST 1378937.21	DATE:03-JUN-93
GROUND ELEVATION: 570	GWL: Depth Date/Time	DATE STARTED: 03-JUN-93
ENGINEER/GEOLOGIST: J REAGAN	Depth Date/Time	DATE COMPLETE: 07-JUN-93
DRILLING METHOD: HOLLOW STEM AUGER		

DEPTH	SAMPLE DATE TIME	BLOWS ON SAMPLE	RECOVERY INCHES		USCS SYMBOL	TSF	REMARKS
13.0 13.5	06/03/93 00:00	15	6	VERY STIFF, (10YR, 5/1), SILTY CLAY, MEDIUM PLASTICITY, MOIST	CL	2.5	PID=1.5 ppm BΓ=60 cpm
13.5 14.0	06/03/93 00:00	17	6	SAA	CL	2.5	PID=1.5 ppm BΓ=60 cpm
14.0 14.5	06/03/93 00:00	5	0	NO RECOVERY	N/A	N/A	
14.5 15.0	06/03/93 00:00	8	0	NO RECOVERY	N/A	N/A	
15.0 15.5	06/03/93 00:00	23	0	NO RECOVERY	N/A	N/A	
15.5 16.0	000000 3624-0 6701-0 06/03/93 00:00	36	0	NO RECOVERY	N/A	N/A	
16.0 16.5	116455 06/07/93 10:00	28	6	VERY DENSE, (10YR, 5/1), POORLY GRADED SAND, LOW PLASTICITY, MOIST	SP	N/A	PID=0.5 ppm BΓ=60 cpm
16.5 17.0	116456 06/07/93 10:00	63	6	SAA	SP	N/A	PID=0.5 ppm BΓ=60 cpm
17.0 17.5	116457 06/07/93 10:00	72	6	SAA	SP	N/A	PID=0.5 ppm BΓ=60 cpm
17.5 18.0	116458 06/07/93 10:00	85	6	SAA	SP	N/A	PID=0.5 ppm BΓ=60 cpm

NOTES:

Boring Contractor: PENNSYLVANIA DRILLING
Driller: JOE RAAB, ROGER DAVIS
Drilling Equipment: ACKER SOIL SENTRY

SAA = Same as Above
PID = Photoionization Detector
N/A = Not Applicable

PROJECT NUMBER: 20.03.05	PROJECT NAME: CRU2 RI PHASE II FIELD INVESTIGATION	
BORING NUMBER: 11051	COORDINATES: NORTH 477985.59, EAST 1379026.36	DATE:26-MAY-93
GROUND ELEVATION: 573.3	GWL: Depth Date/Time	DATE STARTED: 26-MAY-93
ENGINEER/GEOLOGIST: J REAGAN	Depth Date/Time	DATE COMPLETE: 27-MAY-93
DRILLING METHOD: HOLLOW STEM AUGER		

DEPTH	SAMPLE	DATE TIME	BLOWS ON	SAMPLE	RECOVERY	INCHES		USCS SYMBOL	TSF	REMARKS
19.0		05/26/93 14:40	N/A		N/A		AUGERED 0-19 FT. BLACK FLYASH	N/A	N/A	
19.0	116436	05/26/93 14:40	100		4		MIXED TERRACOTTA PIPE MATERIAL AND FLYASH, WET	N/A	N/A	PID=2.0 ppm BΓ=800 cpm
21.0	116438 116439 116440	05/27/93 09:40	10		6		MIXED WASTE MATERIALS, CONCRETE, BLACK FLYASH, SOIL IS SILTY FINE SAND	N/A	N/A	PID=0.5 ppm BΓ=1600 cpm
22.0	116441 116442 116443	05/27/93 10:10	100		6		MIXED WASTE, BOLTS, NAILS FLYASH. SOIL IS SILTY FINE SAND MATERIAL	N/A	N/A	PID=1.5 ppm BΓ=1000 cpm
22.5	116441 116443	05/27/93 10:10	200		6		MIXED WASTE, BOLTS, NAILS, FLYASH, SOIL IS SILTY FINE, SAND MATERIAL	N/A	N/A	PID=1.5 ppm BΓ=1000 cpm
23.0	116441 116442	05/27/93 10:10	100		6		MIXED WASTE, BOLTS, NAILS, FLYASH, SOIL IS SILTY FINE, SAND MATERIAL	N/A	N/A	PID=1.5 ppm BΓ=1000 cpm
23.5		05/27/93 10:10	10		6		MIXED WASTE, BOLTS, NAILS, FLYASH, SOIL IS SILTY FINE SAND MATERIAL	N/A	N/A	PID=1.5 ppm BΓ=1000 cpm
24.0	116444	05/27/93 10:50	4		6		SAA	N/A	N/A	PID=1.2 ppm BΓ=100 cpm
24.5	116444	05/27/93 10:50	6		6		SAA	N/A	N/A	PID=1.2 ppm BΓ=100 cpm
25.0		05/27/93 10:50	8		6		VERY STIFF, (2.5Y, 4/1) SILTY CLAY, MEDIUM PLASTICITY, MOIST. ABRUPT BOUNDARY TO VERY STIFF, (10YR, 4/3) SILTY CLAY, MEDIUM PLASTICITY, MOIST	CL	2.5	PID=1.2 ppm BΓ=100 cpm
25.5		05/27/93 10:50	10		6		VERY STIFF, (2.5Y, 4/1) SILTY CLAY, MEDIUM PLASTICITY, MOIST, ABRUPT BOUNDARY TO VERY STIFF, (10YR, 4/3), SILTY CLAY, MIDIUM PLASTICITY, MOIST	CL	2.5	PID=1.2 ppm BΓ=100 cpm

NOTES:
05/26/93 BACKGROUND: HNU=0.3 PPM, BETA GAMMA=60 CPM,
05/27/93 HNU=1 PPM, BETA GAMMA=80-100 CPM

Boring Contractor: PENNSYLVANIA DRILLING
Driller: M WATRAL, B DEILEY
Drilling Equipment: ACKER SOIL SENTRY

SAA = Same as Above
PID = Photoionization Detector
N/A = Not Applicable

0424

PROJECT NUMBER: 20.03.05	PROJECT NAME: CRU2 RI PHASE II FIELD INVESTIGATION	
BORING NUMBER: 11051	COORDINATES: NORTH 477985.59 EAST 1379026.36	DATE:26-MAY-93
GROUND ELEVATION: 573.3	GWL: Depth Date/Time	DATE STARTED: 26-MAY-93
ENGINEER/GEOLOGIST: J REAGAN	Depth Date/Time	DATE COMPLETE: 27-MAY-93

DRILLING METHOD: HOLLOW STEM AUGER

DEPTH	SAMPLE	DATE TIME	BLOWS ON SAMPLE	RECOVERY INCHES		USCS SYMBOL	TSF	REMARKS
26.0 26.5		05/27/93 10:50	8	6	SAA	CL	2.5	PID=1.0 ppm βΓ=100 cpm
26.5 27.0		05/27/93 10:50	14	6	SAA	CL	2.5	PID=1.0 ppm βΓ=100 cpm
27.0 28.0		05/27/93 10:50	100	5	SAA	CL	2.5	PID=1.0 ppm βΓ=100 cpm
28.0 28.5	116445	05/27/93 15:00	5	6	MEDIUM DENSE, (10YR, 5/6)	SP	N/A	PID=0.5 ppm βΓ=80 cpm
28.5 29.0	116446	05/27/93 15:00	10	6	POORLY GRADED, MEDIUM SAND	N/A	N/A	PID=0.5 ppm βΓ=80 cpm
29.0 29.5	116447	05/27/93 15:00	10	6	LOW PLASTICITY, MOIST	N/A	N/A	PID=0.5 ppm βΓ=80 cpm
29.5 30.0	116448	05/27/93 15:00	10	6		N/A	N/A	PID=0.5 ppm βΓ=80 cpm

NOTES:
05/26/93 BACKGROUND: HNU=0.3 PPM, BETA GAMMA=60 CPM,
05/27/93 HNU=1 PPM, BETA GAMMA=80-100 CPM

Boring Contractor: PENNSYLVANIA DRILLING
Driller: M WATRAL, B DEILEY
Drilling Equipment: ACKER SOIL SENTRY

SAA = Same as Above
PID = Photoionization Detector
N/A = Not Applicable

0425

PROJECT NUMBER: 20.03.05	PROJECT NAME: CRU2 RI PHASE II FIELD INVESTIGATION	
BORING NUMBER: 11052	COORDINATES: NORTH 478012.50 EAST 1379007.41	DATE:25-MAY-93
GROUND ELEVATION: 572.5	GWL: Depth Date/Time	DATE STARTED: 25-MAY-93
ENGINEER/GEOLOGIST: J REAGAN	Depth Date/Time	DATE COMPLETE: 25-MAY-93

DRILLING METHOD: HOLLOW STEM AUGER

DEPTH	SAMPLE	DATE TIME	BLOWS ON	SAMPLE	RECOVERY	INCHES		USCS SYMBOL	TSF	REMARKS
19.0		05/25/93 00:00	N/A		N/A		AUGERED 0-19 FT	N/A	N/A	
19.0 19.5	116427 116428 116429	05/25/93 14:00	3		6		VERY STIFF, (10YR, 3/3), SILTY CLAY, MEDIUM PLASTICITY, VERY MOIST, SOME GRAVELS	CL	2	PID=2.5 ppm BΓ=1000 cpm
19.5 20.0	116427 116428 116429	05/25/93 14:00	8		6		SAA	CL	2	PID=2.5 ppm BΓ=1000 cpm
20.0 21.0	116427 116428 116429	05/25/93 14:00	100		3		SAA	CL	2	PID=2.5 ppm BΓ=1000 cpm
21.0 21.5	116430	05/25/93 14:50	14		6		VERY STIFF, (10YR, 3/3), SILTY CLAY, MEDIUM PLASTICITY, MOIST, SOME GRAVEL	CL	2.5	PID=1 ppm BΓ=200 cpm
21.5 22.0	116430	05/25/93 14:50	17		6		SAA	CL	2.5	PID=1 ppm BΓ=200 cpm
22.0 22.5		05/25/93 14:50	22		0		SAA	N/A	N/A	
22.5 23.0		05/25/93 14:50	28		0		NO RECOVER (INFERRED FROM BORING LOG)	N/A	N/A	
23.0 23.5		05/25/93 00:00	6		6		VERY STIFF, (10YR, 3/3), SILTY FINE SAND, LOW PLASTICITY, MOIST	ML	2	PID=1 ppm BΓ=50 cpm
23.5 24.0		05/25/93 00:00	8		6		SAA	ML	2	PID=1 ppm BΓ=50 cpm
24.0 24.5		05/25/93 00:00	N/A 12		6		SAA	N/A ML	N/A 2	PID=1 ppm BΓ=50 cpm
24.5 25.0		05/25/93 00:00	14		6		SAA	ML	2	PID=1 ppm BΓ=50 cpm

NOTES:
BACKGROUND: HNU=.5PPM/BETA GAMMA=60-80CPM

Boring Contractor: PENNSYLVANIA
Driller: M WATRAL, B DEILEY
Drilling Equipment: ACKER SOIL SENDRY

SAA = Same as Above
PID = Photoionization Detector
N/A = Not Applicable

0426

PROJECT NUMBER: 20.03.05	PROJECT NAME: CRU2 RI PHASE II FIELD INVESTIGATION	
BORING NUMBER: 11052	COORDINATES: NORTH 478012.50 EAST 1379007.41	DATE:25-MAY-93
GROUND ELEVATION: 572.5	GWL: Depth Date/Time	DATE STARTED: 25-MAY-93
ENGINEER/GEOLOGIST: J REAGAN	Depth Date/Time	DATE COMPLETE: 25-MAY-93

DRILLING METHOD: HOLLOW STEM AUGER

DEPTH	SAMPLE	DATE TIME	BLOWS ON SAMPLE	RECOVERY INCHES		USCS SYMBOL	TSF	REMARKS
25.0 25.5	116431 116432 116433 116434 05/25/93 15:20	7	6	MEDIUM DENSE, (10YR, 5/6), POORLY GRADED MEDIUM SAND, LOW PLASTICITY, MOIST		SP	N/A	PID=2 ppm βΓ=50 cpm
25.5 26.0	116431 116432 116433 116434 05/25/93 15:20	10	6	SAA		SP	N/A	PID=2 ppm βΓ=50 cpm
26.0 26.5	116431 116432 116433 116434 05/25/93 15:20	10	6	SAA		SP	N/A	PID=2 ppm βΓ=50 cpm
26.5 27.0	116431 116432 116433 116434 05/25/93 15:20	12	6	SAA		SP	N/A	PID=2 ppm βΓ=50 cpm

NOTES:
BACKGROUND: HNU=.5PPM/BETA GAMMA=60-80CPM

Boring Contractor: PENNSYLVANIA
Driller: M WATRAL, B DEILEY
Drilling Equipment: ACKER SOIL SENDRY

SAA = Same as Above
PID = Photoionization Detector
N/A = Not Applicable

0427

PROJECT NUMBER: 20.03.05	PROJECT NAME: CRU2 RI PHASE II FIELD INVESTIGATION	
BORING NUMBER: 11053	COORDINATES: NORTH 478007.29 EAST 1379053.79	DATE:21-MAY-93
GROUND ELEVATION: 566.2	GWL: Depth Date/Time	DATE STARTED: 20-MAY-93
ENGINEER/GEOLOGIST: J REAGAN	Depth Date/Time	DATE COMPLETE: 21-MAY-93
DRILLING METHOD: HOLLOW STEM AUGER		

DEPTH	SAMPLE	DATE TIME	BLOWS ON	SAMPLE	RECOVERY	INCHES		USCS SYMBOL	TSF	REMARKS
14.0		05/20/93 16:10	N/A		N/A		AUGERED TO 14' DIFFICULT AUGERING 5.5'-8.0'	N/A	N/A	
14.0 14.5		05/20/93 16:10	3		6		(10YR, 2/1) FLYASH	N/A	N/A	PID=3 ppm BΓ=60 cpm
14.5 15.0		05/20/93 16:10	4		6		VERY STIFF,(10YR 5/4) CLAY, MEDIUM PLASTICITY, MOIST	CL	3	PID=3 ppm BΓ=60 cpm
15.5 16.0		05/20/93 16:10	100		0		REFUSAL AT 15'3" AUGERED TO 16	N/A	N/A	
16.0 16.5		05/20/93 16:10	19		6		DENSE, 10YR 5/6, MEDIUM SAND, POORLY GRADED, DRY	SP	N/A	PID=3.2 ppm BΓ=60 cpm
16.5 17.0		05/20/93 16:10	19		6		DENSE, 10YR 5/6, MEDIUM SAND, POORLY GRADED, DRY	SP	N/A	PID=3.2 ppm BΓ=60 cpm
17.0 17.5		05/20/93 16:10	15		6		DENSE, 10YR 5/6, MEDIUM SAND, POORLY GRADED, DRY	SP	N/A	PID=3.2 ppm BΓ=60 cpm
17.5 18.0		05/20/93 16:10	18		6		DENSE, 10YR 5/6, MEDIUM SAND, POORLY GRADED, DRY	SP	N/A	PID=3.2 ppm BΓ=60 cpm
18.0 18.5	116419 116420	05/20/93 16:10	17		6		DENSE, 10YR 5/6, MEDIUM SAND, POORLY GRADED, DRY	SP	N/A	PID=4.0 ppm BΓ=60 cpm
18.5 19.0	116419 116420	05/20/93 16:10	20		6		DENSE, 10YR 5/6, MEDIUM SAND, POORLY GRADED, DRY	SP	N/A	PID=4.0 ppm BΓ=60 cpm
19.0 19.5	116419 116420	05/20/93 16:10	23		6		DENSE, 10YR 5/6, MDEIUM SAND, POORLY GRADED, DRY	SP	N/A	PID=4.0 ppm BΓ=60 cpm
19.5 20.0	116419 116420	05/20/93 16:10	22		6		DENSE, 10YR 5/6, MEDIUM SAND, POORLY GRADED, DRY	SP	N/A	PID=4.0 ppm BΓ=60 cpm

NOTES:

Boring Contractor: PENNSYLVANIA DRILLING CO.
Driller: M WATRAL, B DEILEY
Drilling Equipment: ACKER SOIL SENTRY

SAA = Same as Above
PID = Photoionization Detector
N/A = Not Applicable

PROJECT NUMBER: 20.03.05	PROJECT NAME: CRU2 RI PHASE II FIELD INVESTIGATION	
BORING NUMBER: 11053	COORDINATES: NORTH 478007.29 EAST 1379053.79	DATE:21-MAY-93
GROUND ELEVATION: 566.2	GWL: Depth Date/Time	DATE STARTED: 20-MAY-93
ENGINEER/GEOLOGIST: J REAGAN	Depth Date/Time	DATE COMPLETE: 21-MAY-93
DRILLING METHOD: HOLLOW STEM AUGER		

DEPTH	SAMPLE	DATE TIME	BLOWS ON SAMPLE	RECOVERY INCHES		USCS SYMBOL	TSF	REMARKS
20.0 20.5		05/20/93 16:10	13	6	SAA	SP	N/A	PID=5.0 ppm βΓ=60 cpm
20.5 21.0		05/20/93 16:10	20	6	SAA	SP	N/A	PID=5.0 ppm βΓ=60 cpm
21.0 21.5		05/20/93 16:10	23	6	SAA	SP	N/A	PID=5.0 ppm βΓ=60 cpm
21.5 22.0		05/20/93 16:10	23	0	NO RECOVERY (INFERRED FROM BORING LOG)	N/A	N/A	
22.0 22.5		05/20/93 16:10	17	6	SAA	SP	N/A	PID=.5 ppm βΓ=40 cpm
22.5 23.0		05/20/93 16:10	18	6	SAA	SP	N/A	PID=.5 ppm βΓ=40 cpm
23.0 23.5		05/20/93 16:10	19	6	SAA	SP	N/A	PID=.5 ppm βΓ=40 cpm
23.5 24.0		05/20/93 16:10	26	6	SAA	SP	N/A	PID=.5 ppm βΓ=40 cpm
24.0 24.5	116421 116422	05/21/93 09:40	3	6	DENSE, 10YR 5/6, MEDIUM SAND, POORLY GRADED, MOIST	SP	N/A	PID=.5 ppm
24.5 25.0	116421 116422	05/21/93 09:40	17	6	DENSE, 10YR 5/6, MEDIUM SAND, POORLY GRADED, MOIST	SP	N/A	PID=.5 ppm
25.0 25.5	116421 116422	05/21/93 09:40	20	6	DENSE, 10YR 5/6, MEDIUM SAND, POORLY GRADED, MOIST	SP	N/A	PID=.5 ppm
25.5 26.0	116421 116422	05/21/93 09:40	26	6	DENSE, 10YR 5/6, MEDIUM SAND, POORLY GRADED, MOIST	SP	N/A	PID=.5 ppm

NOTES:

Boring Contractor: PENNSYLVANIA DRILLING CO.
Driller: M WATRAL, B DEILEY
Drilling Equipment: ACKER SOIL SENTRY

SAA = Same as Above
PID = Photoionization Detector
N/A = Not Applicable

0429

PROJECT NUMBER: 20.03.05	PROJECT NAME: CRU2 RI PHASE II FIELD INVESTIGATION	
BORING NUMBER: 11054	COORDINATES: NORTH 477832.87 EAST 1379123.03	DATE:21-MAY-93
GROUND ELEVATION: 566.5	GWL: Depth Date/Time	DATE STARTED:
ENGINEER/GEOLOGIST: J BOYER	Depth Date/Time	DATE COMPLETE: 21-MAY-93
DRILLING METHOD: HOLLOW STEM AUGER		

DEPTH	SAMPLE DATE TIME	BLOWS ON SAMPLE	RECOVERY INCHES		USCS SYMBOL	TSF	REMARKS
8.0	05/21/93 00:00	N/A	N/A	DESTRUCTIVE DRILLLING TO 8 FEET	N/A	N/A	
8.0 8.5	05/21/93 00:00	10	6	MEDIUM STIFF, (2.5Y, 5/4) LIGHT OLIVE BROWN, SILTY CLAY WITH FLYASH AND GRAVEL, SLIGHTLY PLASTICITY, MOIST	CL	.75	PID=4.5 ppm BΓ=80 cpm
8.5 9.0	05/21/93 00:00	8	6	SAA	CL	1.0	PID=4.5 ppm BΓ=80 cpm
9.0 9.5	05/21/93 00:00	5	6	SAA	CL	.5	PID=4.5 ppm BΓ=80 cpm
9.5 10.0	05/21/93 00:00	7	6	SAA	CL	.75	PID=4.5 ppm BΓ=80 cpm
10.0 10.5	05/21/93 00:00	2	6	SAA	CL	1.0	PID=3.8 ppm BΓ=80 cpm
10.5 11.0	05/21/93 00:00	3	0	NO RECOVERY (PUSHED ROCK)	N/A	N/A	
11.0 11.5	05/21/93 00:00	5	0	NO RECOVERY (PUSHED ROCK)	N/A	N/A	
11.5 12.0	05/21/93 00:00	5	0	NO RECOVERY (PUSHED ROCK)	N/A	N/A	
12.0 12.5	05/21/93 00:00	3	6	(10YR, 2/1) BLACK, FLYASH, MOIST	N/A	N/A	PID=4.8 ppm BΓ=80 cpm
12.5 13.0	05/21/93 00:00	2	6	SAA	N/A	N/A	PID=4.8 ppm BΓ=80 cpm
13.0 13.5	05/21/93 00:00	2	6	SAA	N/A	N/A	PID=4.8 ppm BΓ=80 cpm
13.5 14.0	05/21/93 00:00	3	5	SAA	N/A	N/A	PID=4.8 ppm BΓ=80 cpm

NOTES:

Boring Contractor: PENNSYLVANA DRILLING
Driller: JOE RAAB, ROGER DAVIS
Drilling Equipment: ACKER

SAA = Same as Above
PID = Photoionization Detector
N/A = Not Applicable

PROJECT NUMBER: 20.03.05	PROJECT NAME: CRU2 RI PHASE II FIELD INVESTIGATION	
BORING NUMBER: 11054	COORDINATES: NORTH 477832.87 EAST 1379123.03	DATE:21-MAY-93
GROUND ELEVATION: 566.5	GWL: Depth Date/Time	DATE STARTED:
ENGINEER/GEOLOGIST: J BOYER	Depth Date/Time	DATE COMPLETE: 21-MAY-93
DRILLING METHOD: HOLLOW STEM AUGER		

DEPTH	SAMPLE	DATE TIME	BLOWS ON SAMPLE	RECOVERY INCHES		USCS SYMBOL	TSF	REMARKS
14.0 14.5		05/21/93 00:00	1	N/A	MEDIUM DENSE, (5Y, 5/6) OLIVE, SILT, TRACE GRAVEL, DRY	ML	N/A	PID=3.8 ppm βΓ=80 cpm
14.5 15.0		05/21/93 00:00	5	6	MEDIUM DENSE, (5Y, 5/6) OLIVE, SILT, TRACE GRAVEL, DRY	ML	N/A	PID=3.8 ppm βΓ=80 cpm
15.0 15.5		05/21/93 00:00	7	6	SAA	ML	N/A	PID=3.8 ppm βΓ=80 cpm
15.5 16.0		05/21/93 00:00	15	4	SAA	ML	N/A	PID=3.8 ppm βΓ=80 cpm
16.0 16.5	116340	05/21/93 10:10	5	6	DENSE, (2.5Y, 5/6) LIGHT OLIVE BROWN, POORLY GRADED SAND, MOIST	SP	N/A	PID=2.6 ppm βΓ=80 cpm
16.5 17.0	116340	05/21/93 10:10	10	6	SAA	SP	N/A	PID=2.6 ppm βΓ=80 cpm
17.0 17.5		05/21/93 10:10	17	0	NO RECOVERY	N/A	N/A	PID=2.6 ppm βΓ=80 cpm
17.5 18.0		05/21/93 10:10	22	0	NO RECOVERY	N/A	N/A	PID=2.6 ppm βΓ=80 cpm
18.0 18.5		05/21/93 00:00	5	6	DENSE, (2.5Y, 5/6) LIGHT OLIVE BROWN, POORLY GRADED SAND, MOIST	SP	N/A	PID=3.4 ppm βΓ=80 cpm
18.5 19.0		05/21/93 00:00	11	6	SAA	SP	N/A	PID=3.4 ppm βΓ=80 cpm
19.0 19.5		05/21/93 00:00	17	2	SAA	SP	N/A	PID=3.4 ppm βΓ=80 cpm
19.5 20.0		05/21/93 00:00	28	0	NO RECOVERY	N/A	N/A	
20.0 20.5		05/21/93 00:00	5	6	DENSE, (2.5Y, 5/4) LIGHT OLIVE BROWN, POORLY GRADED SAND, TRACE GRAVEL, MOIST	SP	N/A	PID=3.2 ppm βΓ=80 cpm

NOTES:

Boring Contractor: PENNSYLVANA DRILLING
Driller: JOE RAAB, ROGER DAVIS
Drilling Equipment: ACKER

SAA = Same as Above
PID = Photoionization Detector
N/A = Not Applicable

0431

PROJECT NUMBER: 20.03.05	PROJECT NAME: CRU2 RI PHASE II FIELD INVESTIGATION	
BORING NUMBER: 11054	COORDINATES: NORTH 477832.87 EAST 1379123.03	DATE: 21-MAY-93
GROUND ELEVATION: 566.5	GWL: Depth Date/Time	DATE STARTED:
ENGINEER/GEOLOGIST: J BOYER	Depth Date/Time	DATE COMPLETE: 21-MAY-93
DRILLING METHOD: HOLLOW STEM AUGER		

DEPTH	SAMPLE	SAMPLE DATE TIME	BLOWS ON SAMPLE	RECOVERY INCHES		USCS SYMBOL	TSF	REMARKS
20.5 21.0		05/21/93 00:00	9	6	SAA	SP	N/A	PID=3.2 ppm βΓ=80 cpm
21.0 21.5		05/21/93 00:00	17	6	SAA	SP	N/A	PID=3.2 ppm βΓ=80 cpm
21.5 22.0		05/21/93 00:00	27	0	NO RECOVERY INFERRED FROM BORING LOG	N/A	N/A	
22.0 22.5		05/21/93 10:10	7	N/A	DENSE, (2.5Y, 5/6) LIGHT OLIVE BROWN, POORLY GRADED SAND, MOIST	N/A	N/A	PID=3.3 ppm βΓ=80 cpm
22.5 23.0		05/21/93 10:10	12	N/A	SAA	SP	N/A	PID=3.3 ppm βΓ=80 cpm
23.0 23.5	116341	05/21/93 11:00	17	N/A	SAA	SP	N/A	PID=3.3 ppm βΓ=80 cpm
23.5 24.0	116341	05/21/93 11:00	23	N/A	SAA	SP	N/A	PID=3.3 ppm βΓ=80 cpm

NOTES:

Boring Contractor: PENNSYLVANA DRILLING
Driller: JOE RAAB, ROGER DAVIS
Drilling Equipment: ACKER

SAA = Same as Above
PID = Photoionization Detector
N/A = Not Applicable

0432

PROJECT NUMBER: 20.03.05	PROJECT NAME: CRU2 RI PHASE II FIELD INVESTIGATION	
BORING NUMBER: 11055	COORDINATES: NORTH 477810.59 EAST 1379125.56	DATE:19-MAY-93
GROUND ELEVATION: 567	GWL: Depth Date/Time	DATE STARTED: 19-MAY-93
ENGINEER/GEOLOGIST: J BOYER	Depth Date/Time	DATE COMPLETE: 19-MAY-93
DRILLING METHOD: HOLLOW STEM AUGER		

DEPTH	SAMPLE DATE TIME	BLOWS ON SAMPLE	RECOVERY INCHES		USCS SYMBOL	TSF	REMARKS
10.0	05/19/93 00:00	N/A	N/A	DESTRUCTIVE DRILLING TO 10 FEET	N/A	N/A	
10.0 10.5	05/19/93 00:00	12	6	(10YR, 2/1), FLYASH, BLACK, MOIST	N/A	N/A	PID=1.9 ppm βΓ=60 cpm
10.5 11.0	05/19/93 00:00	15	6	SAA	N/A	N/A	PID=1.9 ppm βΓ=60 cpm
11.0 11.5	05/19/93 00:00	5	6	SAA	N/A	N/A	PID=1.9 ppm βΓ=60 cpm
11.5 12.0	05/19/93 00:00	10	6	STIFF, (2.5Y, 5/3) LIGHT OLIVE BROWN, SILTY CLAY WITH FLYASH AND GRAVEL, LOW PLASTICITY, MOIST	CL	1.0	PID=1.9 ppm βΓ=60 cpm
12.0 12.5	05/19/93 00:00	16	6	(10YR, 2/1), FLYASH, BLACK, MOIST WITH CONCRETE AND SILTY CLAY	N/A	N/A	PID=30.0 ppm βΓ=80 cpm
12.5 13.0	05/19/93 00:00	28	6	SAA	N/A	N/A	PID=30.0 ppm βΓ=80 cpm
13.0 13.5	05/19/93 00:00	14	0	NO RECOVERY	N/A	N/A	
13.5 14.0	05/19/93 00:00	16	0	SAA	N/A	N/A	
14.0 14.5	05/19/93 00:00	3	6	(10YR, 2/1), FLYASH, BLACK, 45% SILTY CLAY, (2.5Y, 5/4) MOIST	N/A	N/A	PID=1.5 ppm βΓ=40 cpm
14.5 15.0	05/19/93 00:00	2	6	(10YR, 2/1) BLACK, FLYASH	N/A	N/A	PID=1.5 ppm βΓ=40 cpm
15.0 15.5	05/19/93 00:00	2	6	SAA	N/A	N/A	PID=1.5 ppm βΓ=40 cpm
15.5 16.0	05/19/93 00:00	2	0	NO RECOVERY	N/A	N/A	

NOTES:

Driller: JOE RAAB
Drilling Equipment: HOLLOW STEM AUGER

SAA = Same as Above
PID = Photoionization Detector
N/A = Not Applicable

0433

PROJECT NUMBER: 20.03.05	PROJECT NAME: CRU2 RI PHASE II FIELD INVESTIGATION	
BORING NUMBER: 11055	COORDINATES: NORTH 477810.59 EAST 1379125.56	DATE:19-MAY-93
GROUND ELEVATION: 567	GWL: Depth Date/Time	DATE STARTED: 19-MAY-93
ENGINEER/GEOLOGIST: J BOYER	Depth Date/Time	DATE COMPLETE: 19-MAY-93
DRILLING METHOD: HOLLOW STEM AUGER		

DEPTH	SAMPLE	DATE TIME	BLOWS ON	SAMPLE	RECOVERY	INCHES		USCS	SYMBOL	TSF	REMARKS
16.0 16.5	116331 05/19/93 13:00		3 3 3		24		(10YR, 2/1) BLACK, FLYASH, SLIGHTLY MOIST	N/A		N/A	PID=0.0 ppm BΓ=40 cpm
18.0 23.0	05/19/93 00:00		N/A		N/A		DESTRUCTIVE DRILLING TO 23 FEET	N/A		N/A	
23.0 23.5	05/19/93 00:00		6		6		(10YR, 2/1), FLYASH, BLACK, SLIGHTLY MOIST	N/A		N/A	PID=0.0 ppm BΓ=40 cpm
23.5 24.0	116332 05/19/93 13:35		6		6		MEDIUM DENSE, (2.5Y, 5/4) LIGHT OLIVE BROWN, SILTY SAND WITH GRAVEL, MOIST	SM		N/A	PID=0.0 ppm BΓ=40 cpm
24.0 24.5	116332 05/19/93 13:35		7		6		SAA	SM		N/A	PID=0.0 ppm BΓ=40 cpm
24.5 25.0	116332 05/19/93 13:35		13		6		SAA	SM		N/A	PID=0.0 ppm BΓ=40 cpm

NOTES:

Driller: JOE RAAB
Drilling Equipment: HOLLOW STEM AUGER

SAA = Same as Above
PID = Photoionization Detector
N/A = Not Applicable

0434

PROJECT NUMBER: 20.03.05	PROJECT NAME: CRU2 RI PHASE II FIELD INVESTIGATION	
BORING NUMBER: 11056	COORDINATES: NORTH 477814.54 EAST 1379102.38	DATE:20-MAY-93
GROUND ELEVATION: 563.5	GWL: Depth Date/Time	DATE STARTED: 20-MAY-93
ENGINEER/GEOLOGIST: J BOYER	Depth Date/Time	DATE COMPLETE: 20-MAY-93
DRILLING METHOD: HOLLOW STEM AUGER		

DEPTH	SAMPLE	DATE TIME	BLOWS ON SAMPLE	RECOVERY INCHES		USCS SYMBOL	TSF	REMARKS
10.0		05/20/93 10:15	N/A	N/A	DESTRUCTIVE DRILL TO 10 FEET	N/A	N/A	
8.5 9.0	113256	05/27/93 08:40	10	6	MEDIUM DENSE (10YR) LIGHT BROWNISH GRAY AND (10YR, 5/6) YELLOWISH BROWN CLAYEY SILT, DRY	ML	N/A	
10.0 10.5		05/20/93 00:00	33	6	VERY DENSE, (2.5YR, 5/6) LIGHT OLIVE BROWN, SILTY SAND AND FLYASH, (50%) MOIST	SM	N/A	PID=3.5 ppm βΓ=80 cpm
10.5 11.0		05/20/93 00:00	50	6	SAA	SM	N/A	PID=3.5 ppm βΓ=80 cpm
11.0 11.5		05/20/93 00:00	3	0	NO RECOVERY SPLIT SPOON REFUSAL	N/A	N/A	
11.5 12.0		05/20/93 00:00	10	0	SAA	N/A	N/A	
12.0 12.5		05/20/93 00:00	14	6	(10YR, 2/1) FLYASH, BLACK, SLIGHTLY MOIST	N/A	N/A	PID=4.5 ppm βΓ=80 cpm
12.5 13.0		05/20/93 00:00	17	6	SAA	N/A	N/A	PID=4.5 ppm βΓ=80 cpm
13.0 13.5		05/20/93 00:00	4	6	SAA	N/A	N/A	PID=4.5 ppm βΓ=80 cpm
13.5 14.0		05/20/93 00:00	2	6	SAA	N/A	N/A	PID=4.5 ppm βΓ=80 cpm
14.0 14.5		05/20/93 00:00	18	6	SAA	N/A	N/A	PID=2.5 ppm βΓ=60 cpm
14.5 15.0		05/20/93 00:00	22	6	SAA	N/A	N/A	PID=2.5 ppm βΓ=60 cpm
15.0 15.5		05/20/93 00:00	4	6	SAA	N/A	N/A	PID=2.5 ppm βΓ=60 cpm

NOTES:

Boring Contractor: PENNSYLVANIA DRILLING
Driller: JOE RAAB
Drilling Equipment: ACKER

SAA = Same as Above
PID = Photoionization Detector
N/A = Not Applicable

0435

PROJECT NUMBER: 20.03.05	PROJECT NAME: CRU2 RI PHASE II FIELD INVESTIGATION	
BORING NUMBER: 11056	COORDINATES: NORTH 477814.54 EAST 1379102.38	DATE:20-MAY-93
GROUND ELEVATION: 563.5	GWL: Depth Date/Time	DATE STARTED: 20-MAY-93
ENGINEER/GEOLOGIST: J BOYER	Depth Date/Time	DATE COMPLETE: 20-MAY-93
DRILLING METHOD: HOLLOW STEM AUGER		

DEPTH	SAMPLE	DATE TIME	BLOWS ON SAMPLE	RECOVERY INCHES		USCS SYMBOL	TSF	REMARKS
15.5 16.0		05/20/93 00:00	3	6	SAA	N/A	N/A	PID=2.5 ppm BΓ=60 cpm
16.0 16.5	116335	05/20/93 10:15	2	6	(10YR, 2/1) BLACK, FLYASH, MOIST	N/A	N/A	PID=2.6 ppm BΓ=60 cpm
16.5 17.0	116335	05/20/93 10:15	2	6	SAA	N/A	N/A	PID=2.6 ppm BΓ=60 cpm
17.0 17.5	116335	05/20/93 10:15	2	6	SAA	N/A	N/A	PID=2.6 ppm BΓ=60 cpm
17.5 18.0	116335	05/20/93 10:15	2	6	SAA	N/A	N/A	PID=2.6 ppm BΓ=60 cpm
18.0 18.5	116335	05/20/93 00:00	12	6	SAA	N/A	N/A	PID=4.5 ppm BΓ=40 cpm
18.5 19.0	116335	05/20/93 00:00	22	6	SAA	N/A	N/A	PID=4.5 ppm BΓ=40 cpm
19.0 19.5	116335	05/20/93 00:00	22	6	SAA	N/A	N/A	PID=4.5 ppm BΓ=40 cpm
19.5 20.0		05/20/93 00:00	12	6	DENSE, (10YR, 3/4) DARK YELLOWISH BROWN, SILT, TRACE COARSE SAND, MOIST	ML	N/A	PID=4.5 ppm BΓ=40 cpm
20.0 20.5		05/20/93 10:45	6	6	MEDIUM DENSE, (10YR, 4/6) DARK YELLOWISH BROWN, SILT, TRACE COARSE SAND, MOIST.	ML	N/A	PID=5.3 ppm BΓ=40 cpm
20.5 21.0		05/20/93 00:00	6	6	SAA	N/A	N/A	PID=5.3 ppm BΓ=40 cpm
21.0 21.5		05/20/93 00:00	7	6	SAA	N/A	N/A	PID=5.3 ppm BΓ=40 cpm
21.5 22.0		05/20/93 00:00	12	2	SAA	N/A	N/A	PID=5.3 ppm BΓ=40 cpm

NOTES:

Boring Contractor: PENNSYLVANIA DRILLING
Driller: JOE RAAB
Drilling Equipment: ACKER

SAA = Same as Above
PID = Photoionization Detector
N/A = Not Applicable

PROJECT NUMBER: 20.03.05	PROJECT NAME: CRU2 RI PHASE II FIELD INVESTIGATION	
BORING NUMBER: 11056	COORDINATES: NORTH 477814.54 EAST 1379102.38	DATE:20-MAY-93
GROUND ELEVATION: 563.5	GWL: Depth Date/Time	DATE STARTED: 20-MAY-93
ENGINEER/GEOLOGIST: J BOYER	Depth Date/Time	DATE COMPLETE: 20-MAY-93
DRILLING METHOD: HOLLOW STEM AUGER		

DEPTH	SAMPLE	DATE TIME	BLOWS ON SAMPLE	RECOVERY INCHES		USCS SYMBOL	TSF	REMARKS
22.0 22.5		05/20/93 00:00	12	6	DENSE, (2.5Y,5/6) LIGHT OLIVE BROWN, SILTY SAND, TRACE COARSE SAND AND PEBBLES, MOIST	SM	N/A	PID=3.6 ppm BΓ=40 cpm
22.5 23.0		05/20/93 00:00	14	6	SAA	N/A	N/A	PID=3.6 ppm BΓ=40 cpm
23.0 23.5	116336	05/20/93 11:00	17	6	SAA	N/A	N/A	PID=3.6 ppm BΓ=40 cpm
23.5 24.0	116336	05/20/93 11:00	23	6	DENSE, (2.5Y, 5/6) LIGHT OLIVE BROWN, POORLY GRADED SAND, MOIST	SP	N/A	PID=3.6 ppm BΓ=40 cpm

NOTES:

Boring Contractor: PENNSYLVANIA DRILLING
Driller: JOE RAAB
Drilling Equipment: ACKER

SAA = Same as Above
PID = Photoionization Detector
N/A = Not Applicable

0437

5174 02/02/94 16:35

PROJECT NUMBER: 20.03.05	PROJECT NAME: CRU2 RI PHASE II FIELD INVESTIGATION	
BORING NUMBER: 11057	COORDINATES: NORTH 477835.17 EAST 1379107.43	DATE:20-MAY-93
GROUND ELEVATION: 563.5	GWL: Depth Date/Time	DATE STARTED: 20-MAY-93
ENGINEER/GEOLOGIST: J BOYER	Depth Date/Time	DATE COMPLETE: 20-MAY-93
DRILLING METHOD: HOLLOW STEM AUGER		

DEPTH	SAMPLE DATE TIME	BLOWS ON SAMPLE	RECOVERY INCHES		USCS SYMBOL	TSF	REMARKS
10.0	05/20/93 00:00	N/A	N/A	DESTRUCTIVE DRILL TO 10 FEET	N/A	N/A	
10.0 10.5	05/20/93 00:00	33	6	DENSE, (2.5Y, 5/4) LIGHT OLIVE BROWN, SILTY SAND, TRACE COARSE SAND, MOIST	SM	N/A	PID=4.4 ppm BΓ=60 cpm
10.5 11.0	05/20/93 00:00	17	6	SAA	SM	N/A	PID=4.4 ppm BΓ=60 cpm
11.0 11.5	05/20/93 00:00	7	6	(10YR, 2/1) BLACK, FLYASH, MOIST	N/A	N/A	PID=4.4 ppm BΓ=60 cpm
11.5 12.0	05/20/93 00:00	5	6	SAA	N/A	N/A	PID=4.4 ppm BΓ=60 cpm
12.0 12.5	05/20/93 00:00	4	6	SAA	N/A	N/A	PID=2.1 ppm BΓ=60 cpm
12.5 13.0	05/20/93 15:30	4	6	SAA	N/A	N/A	PID=2.1 ppm BΓ=60 cpm
13.0 13.5	05/20/93 00:00	2	6	SAA	N/A	N/A	PID=2.1 ppm BΓ=60 cpm
13.5 14.0	05/20/93 00:00	8	3	LOOSE, (2.5Y, 5/3) LIGHT OLIVE BROWN, CLAYEY SILT WLITH FLYASH, TRACE GRAVEL, LOW PLASTICITY, MOIST	ML	N/A	PID=2.1 ppm BΓ=60 cpm
14.0 14.5	05/20/93 00:00	7	6	(10YR, 2/1) BLACK, FLYASKH, MOIST, TRACE WOOD FRAGMENTS	N/A	N/A	PID=4.4 ppm BΓ=60 cpm
14.5 15.0	05/20/93 00:00	6	6	SAA	N/A	N/A	PID=4.4 ppm BΓ=60 cpm
15.0 15.5	05/20/93 00:00	10	6	MEDIUM DENSE, (2.5Y, 5/4) LIGHT OLIVE BROWN, POORLY GRADED SAND, TRACE SILT, MOIST	SP	N/A	PID=4.4 ppm BΓ=60 cpm
15.5 16.0	05/20/93 15:30	9	6	SAA	SP	N/A	PID=4.4 ppm BΓ=60 cpm

NOTES:

Driller: JOE RAAB, ROGER DAVIS
Drilling Equipment: ACKER

SAA = Same as Above
PID = Photoionization Detector
N/A = Not Applicable

0438

PROJECT NUMBER: 20.03.05	PROJECT NAME: CRU2 RI PHASE II FIELD INVESTIGATION	
BORING NUMBER: 11057	COORDINATES: NORTH 477835.17 EAST 1379107.43	DATE:20-MAY-93
GROUND ELEVATION: 563.5	GWL: Depth Date/Time	DATE STARTED: 20-MAY-93
ENGINEER/GEOLOGIST: J BOYER	Depth Date/Time	DATE COMPLETE: 20-MAY-93
DRILLING METHOD: HOLLOW STEM AUGER		

DEPTH	SAMPLE	DATE TIME	BLOWS ON SAMPLE	RECOVERY INCHES		USCS SYMBOL	TSF	REMARKS
16.0 16.5	116337	05/20/93 15:30	12	6	DENSE, (2.5Y, 5/4) LIGHT OLIVE BROWN, POORLY GRADED SAND, MOIST	SP	N/A	PID=2.6 ppm BΓ=60 cpm
16.5 17.0		05/20/93 15:30	14	6	SAA	SP	N/A	PID=2.6 ppm BΓ=60 cpm
17.0 17.5	116337	05/20/93 15:30	16	6	SAA	SP	N/A	PID=2.6 ppm BΓ=60 cpm
17.5 18.0	116337	05/20/93 15:30	21	6	SAA	SP	N/A	PID=2.6 ppm BΓ=60 cpm
18.0 18.5		05/20/93 00:00	4	6	DENSE, (2.5Y, 5/6) LIGHT OLIVE BROWN, POORLY, GRADED SAND, MOIST	SP	N/A	PID=2.5 ppm BΓ=60 cpm
18.5 19.0		05/20/93 00:00	12	6	SAA	SP	N/A	PID=2.5 ppm BΓ=60 cpm
19.0 19.5		05/20/93 00:00	15	6	SAA	SP	N/A	PID=2.5 ppm BΓ=60 cpm
19.5 20.0		05/20/93 00:00	21	6	SAA	SP	N/A	PID=2.5 ppm BΓ=60 cpm
20.0 20.5		05/20/93 00:00	5	6	SAA	SP	N/A	PID=2.0 ppm BΓ=60 cpm
20.5 21.0		05/20/93 00:00	15	6	SAA	SP	N/A	PID=2.0 ppm BΓ=60 cpm
21.0 21.5		05/20/93 00:00	17	6	SAA	SP	N/A	PID=2.0 ppm BΓ=60 cpm
21.5 22.0		05/20/93 00:00	20	6	SAA	SP	N/A	PID=2.0 ppm BΓ=60 cpm
22.0 22.5		05/20/93 00:00	17	6	SAA	SP	N/A	PID=1.0 ppm BΓ=40-60 cpm

NOTES:

Driller: JOE RAAB, ROGER DAVIS
Drilling Equipment: ACKER

SAA = Same as Above
PID = Photoionization Detector
N/A = Not Applicable

0439

PROJECT NUMBER: 20.03.05	PROJECT NAME: CRU2 RI PHASE II FIELD INVESTIGATION	
BORING NUMBER: 11057	COORDINATES: NORTH 477835.17 EAST 1379107.43	DATE:20-MAY-93
GROUND ELEVATION: 563.5	GWL: Depth Date/Time	DATE STARTED: 20-MAY-93
ENGINEER/GEOLOGIST: J BOYER	Depth Date/Time	DATE COMPLETE: 20-MAY-93
DRILLING METHOD: HOLLOW STEM AUGER		

DEPTH	SAMPLE	DATE TIME	BLOWS ON SAMPLE	RECOVERY INCHES		USCS SYMBOL	TSF	REMARKS
22.5 23.0		05/20/93 00:00	21	6	SAA	SP	N/A	PID=1 ppm βΓ=40-60 cpm
23.0 23.5	116338	05/20/93 16:00	25	6	SAA	SP	N/A	PID=1.0 ppm βΓ=40-60 cpm
23.5 24.0	116338	05/20/93 16:00	15	6	SAA	SP	N/A	PID=1.0 ppm βΓ=40-60 cpm

NOTES:

Driller: JOE RAAB, ROGER DAVIS
Drilling Equipment: ACKER

SAA = Same as Above
PID = Photoionization Detector
N/A = Not Applicable

0440

PROJECT NUMBER: 602 3.2	PROJECT NAME: CRU2 RI PHASE I FIELD INVESTIGATION	
BORING NUMBER: 2047	COORDINATES: NORTH 478263.85 EAST 1379054.18	DATE:20-DEC-88
GROUND ELEVATION: 568.45	GWL: Depth Date/Time	DATE STARTED: 20-DEC-88
ENGINEER/GEOLOGIST: W.A. HERTEL	Depth Date/Time	DATE COMPLETE: 05-JAN-89
DRILLING METHOD: CABLE-TOOL DRILLING		

DEPTH	SAMPLE	DATE TIME	BLOWS ON SAMPLER	RECOVERY	INCHES		USCS SYMBOL	TSF	REMARKS
20.0 21.5	008959	12/20/88 15:20	16 28 32	10		VERY DENSE, BROWN (10 YR 4/3) WELL GRADED, GRAVELLY SAND APPROX. 10% GRAVEL, DRY	SW	N/A	PID=0 ppm α=0 ppm βΓ=60-80 cpm
25.0 26.5	008960	12/20/88 15:40	9 13 24	10		DENSE, YELLOWISH BROWN (10 YR 5/4) POORLY GRADED SAND, NO GRAVEL, DRY	SP	N/A	PID=0 ppm α=0 ppm βΓ=40-60 cpm
30.0 31.5	008961	12/20/88 16:35	11 29 50	15		VERY DENSE, BROWN (10 YR 5/3) POORLY GRADED SAND TOP 12 IN., NO GRAVEL TO WELL GRADED SAND AND GRAVEL BOTTOM 3 IN.	SP SW	N/A	PID=0 ppm α=0 ppm βΓ=40-60 cpm
50.0 51.5	008965	12/21/88 14:55	14 24 27	14		VERY DENSE, BROWN (10 YR 5/3) POORLY GRADED SAND LESS THAN 5% GRAVEL	SP	N/A	PID=0 ppm α=0 ppm βΓ=40-60 cpm
55.0 56.5	008966	12/21/88 15:35	18 34 34	16		VERY DENSE, YELLOWISH BROWN (10 YR 5/4) TOP 12 IN. IS WELL GRADED SAND AND GRAVEL. BOTTOM 4 IN. IS POORLY GRADED FINE SAND.	SW SP	N/A	PID=0 ppm α=0 ppm βΓ=40-60 cpm
60.0 61.5	008967	12/21/88 16:00	5 6 7	15		MEDIUM DENSE, BROWN (10 YR 5/3) POORLY GRADED SAND LESS THAN 5% GRAVEL	SP	N/A	PID=0 ppm α=0 ppm βΓ=40-60 cpm

NOTES:

SAA = Same as Above
PID = Photoionization Detector
N/A = Not Applicable

0441

PROJECT NUMBER: 20.03.05	PROJECT NAME: CRU2 RI PHASE II FIELD INVESTIGATION	
BORING NUMBER: 2955	COORDINATES: NORTH 478103.82 EAST 1378953.07	DATE:26-APR-93
GROUND ELEVATION: 577.2	GWL: Depth 53 Date/Time 30-Apr-93 08:43	DATE STARTED: 26-APR-93
ENGINEER/GEOLOGIST: KEN GEIGER	Depth 53.3 Date/Time 06-May-93 08:00	DATE COMPLETE: 05-MAY-93
DRILLING METHOD: CABLE TOOL		

DEPTH	SAMPLE	DATA TIME	BLOWS ON SAMPLE	RECOVERY INCHES		USCS SYMBOL	TSF	REMARKS
1.0	110768	04/26/93 13:45	3 10	8	STIFF, OLIVE BROWN, (2.5Y, 4/3), SILTY CLAY WITH SOME ROCK FRAGMENTS AND FLYASH, LOW PLASTICITY, SLIGHTLY MOIST	CL	1.25	PID=1.4 ppm α=0 ppm βΓ=40 cpm
1.0 1.5	110768	04/26/93 13:45	9	4	MEDIUM DENSE, BLACK, (2.5Y, 2.5/1), FLYASH, DRY	N/A	N/A	PID=1.4 ppm α=0 ppm βΓ=40 cpm
1.5 3.0	110769	04/26/93 13:50	6 5 8	16	MEDIUM DENSE, BLACK (2.5Y, 2.5/1), FLYASH, DRY	N/A	N/A	PID=1.4 ppm α=0 ppm βΓ=40-80 cpm
3.0 4.5	110770	04/26/93 13:55	4 6 8	15	SAA	N/A	N/A	PID=1.4 ppm α=0 ppm βΓ=40-80 cpm
4.5 6.0	110771	04/26/93 14:00	7 6 5	15	SAA	N/A	N/A	PID=1.3 ppm α=0 ppm βΓ=40-60 cpm
6.0 7.5	110772	04/26/93 14:05	3 3 4	13	LOOSE, BLACK (2.5Y, 2.5/1), FLYASH, DRY	N/A	N/A	PID=1.4 ppm α=0 ppm βΓ=80 cpm
7.5 9.0	110773	04/26/93 14:10	2 2 2	7	VERY LOOSE, BLACK (2.5Y, 2.5/1), FLAYASH, DRY	N/A	N/A	PID=1.4 ppm α=0 ppm βΓ=60-80 cpm
9.0 10.5	110774	04/26/93 14:15	2 1 2	5	SAA	N/A	N/A	PID=1.4 ppm α=0 ppm βΓ=40-60 cpm
10.5 12.0	110775	04/26/93 16:15	4 3 4	7	LOOSE, BLACK, (2.5Y, 2.5/1), FLYASH WITH SOME WOOD FRAGMANTS, WET	N/A	N/A	PID=0 ppm α=0 ppm βΓ=40-60 cpm
12.0 13.5	110776	04/26/93 16:20	3 2 2	9	VERY LOOSE, BLACK, (2.5Y, 2.5/1), FLYASH, WET	N/A	N/A	PID=0 ppm α=0 ppm βΓ=40-60 cpm
13.5 15.0	110777	04/26/93 16:35	3 2 2	11	SAA	N/A	N/A	PID=0.2 ppm α=0 ppm βΓ=60-90 cpm
15.0 16.5	110778	04/26/93 16:40	5 9 10	9	MEDIUM STIFF, OLIVE (5Y, 4/2), SILTY CLAY WITH A TRACE OF GRAVEL AND ROOT FRAGMENTS, MEDIUM PLASTICITY, SLIGHTLY MOIST	CL	1.0	PID=.1 ppm α=0 ppm βΓ=60 cpm
16.5 18.0	110779	04/27/93 08:45	2 5 7	8	MEDIUM STIFF, OLIVE (5Y, 4/2), SILTY CLAY WITH A TRACE OF GRAVEL, MEDIUM PLASTICITY, SLIGHTLY MOIST	CL	1.0	PID=0 ppm α=0 ppm βΓ=60 cpm

NOTES:

Boring Contractor: PENNSYLVANIA DRILLING
Driller: DAVE NEWMAN

SAA = Same as Above
PID = Photoionization Detector
N/A = Not Applicable

0442

PROJECT NUMBER: 20.03.05	PROJECT NAME: CRU2 RI PHASE II FIELD INVESTIGATION	
BORING NUMBER: 2955	COORDINATES: NORTH 478103.82 EAST 1378953.07	DATE:26-APR-93
GROUND ELEVATION: 577.2	GWL: Depth 53 Date/Time 30-Apr-93 08:43	DATE STARTED: 26-APR-93
ENGINEER/GEOLOGIST: KEN GEIGER	Depth 53.3 Date/Time 06-May-93 08:00	DATE COMPLETE: 05-MAY-93
DRILLING METHOD: CABLE TOOL		

DEPTH	SAMPLE	DATA TIME	BLOWS ON SAMPLE	RECOVERY	INCHES		USCS SYMBOL	TSF	REMARKS
18.0 19.5	110780 04/27/93 09:00		11 15 21	7		STIFF, OLIVE (5Y, 4/2), SILTY CLAY WITH A TRACE OF GRAVEL, MEDIUM PLASTICITY, SLIGHTLY MOIST	CL	1.5	PID=0 ppm α=0 ppm βΓ=60 cpm
19.5 21.0	110781 04/27/93 09:55		14 18 21	18		STIFF, OLIVE (5Y, 4/4), SILTY CLAY WITH SOME GRAVEL, MEDIUM PLASTICITY, SLIGHTLY MOIST	CL	2.0	PID=2 ppm α=0 ppm βΓ=60 cpm
21.0 22.5	110782 04/27/93 10:00		16 28 39	18		VERY STIFF, LIGHT OLIVE BROWN (2.5Y, 5/4), SILTY CLAY WITH SOME GRAVEL, MEDIUM PLASTICITY, SLIGHTLY MOIST	CL	2.5	PID=3 ppm α=0 ppm βΓ=60 cpm
22.5 24.0	110783 04/27/93 10:30		18 29 38	5		STIFF, OLIVE BROWN, (2.5Y, 4/4), SILTY GRAVELLY CLAY WITH SOME ROCK FRAGMENTS, MEDIUM PLASTICITY, SLIGHTLY MOIST	CL	2.0	PID=0 ppm α=0 ppm βΓ=60 cpm
24.0 24.5	110784 04/27/93 10:45		16	4		DENSE, YELLOWISH BROWN, (10YR, 5/1), WELL GRADED SAND, SLIGHTLY MOIST	SW	N/A	PID=0 ppm α=0 ppm βΓ=60 cpm
24.5 25.5	110784 04/27/93 10:45		18 21	10		VERY STIFF, GRAY (10YR, 5/1), SILTY CLAY WITH SOME GRAVEL, LOW PLASTICITY, SLIGHTLY MOIST	CL	3.0	PID=0 ppm α=0 ppm βΓ=60 cpm
25.5 27.0	110785 04/27/93 14:10		19 27 50	12		VERY STIFF, YELLOWISH BROWN (10YR, 5/6), SILTY CLAY WITH SOME GRAVEL AND SAND, LOW PLASTICITY, SLIGHTLY MOIST	CL	4.0	PID=1 ppm α=0 ppm βΓ=60 cpm
27.0 28.5	110786 04/27/93 14:45		21 37 40	11		VERY DENSE, DARK YELLOWISH BROWN (10YR, 4/4), POORLY GRADED SAND WITH SOME GRAVEL, DRY	SP	N/A	PID=1 ppm α=0 ppm βΓ=60 cpm
28.5 30.0	04/27/93 14:45		N/A	N/A		NO SAMPLE TAKEN, SAMPLES TO BE TAKEN EVERY 5' STARTING AT 30'.	N/A	N/A	
30.0 31.5	110787 04/28/93 09:10		5 13 25	7		DENSE, DARK YELLOWISH BROWN, (10YR, 4/4), WELL GRADED SAND WITH SOME GRAVEL, DRY	SW	N/A	PID=.5 ppm α=0 ppm βΓ=40-60 cpm
35.0 36.5	112942 04/28/93 09:40		13 17 29	12		DENSE, DARK YELLOWISH BROWN (10YR, 4/4), POORLY GRADED, SAND WITH SOME GRAVEL, DRY	SP	N/A	PID=.5 ppm α=0 ppm βΓ=60 cpm
40.0 41.5	112943 04/28/93 10:00		15 16 19	10		DENSE, DARK YELLOWISH BROWN, (10YR, 4/4), WELL GRADED, SAND WITH SOME GRAVEL, DRY	SW	N/A	PID=1.0 ppm α=0 ppm βΓ=60-80 cpm
45.0 46.5	112944 04/28/93 13:45		12 22 30	9		VERY DENSE, DARK YELLOWISH BROWN, (10YR, 4/4), WELL GRADED SAND WITH SOME GRAVEL, DRY	SW	N/A	PID=.5 ppm α=0 ppm βΓ=60-80 cpm

NOTES:

Boring Contractor: PENNSYLVANIA DRILLING
Driller: DAVE NEWMAN

SAA = Same as Above
PID = Photoionization Detector
N/A = Not Applicable

0443

PROJECT NUMBER: 20.03.05	PROJECT NAME: CRU2 RI PHASE II FIELD INVESTIGATION	
BORING NUMBER: 2955	COORDINATES: NORTH 478103.82 EAST 1378953.07	DATE:26-APR-93
GROUND ELEVATION: 577.2	GWL: Depth 53 Date/Time 30-Apr-93 08:43	DATE STARTED: 26-APR-93
ENGINEER/GEOLOGIST: KEN GEIGER	Depth 53.3 Date/Time 06-May-93 08:00	DATE COMPLETE: 05-MAY-93
DRILLING METHOD: CABLE TOOL		

DEPTH	SAMPLE	DATE TIME	BLOWS ON SAMPLER	RECOVERY INCHES		USCS SYMBOL	TSF	REMARKS
50.0 51.5	112945 04/28/93 15:10	17 22 29	8	VERY DENSE, DARK YELLOWISH BROWN (10YR, 4/4), POORLY GRADED, SAND WITH SOME GRAVEL, DRY		SP	N/A	PID=.1 ppm α=0 ppm βΓ=60 cpm
51.5 53.0	112946 04/29/93 13:30	50	4	VERY DENSE, DARK YELLOWISH BROWN (10YR, 4/4), POORLY GRADED GRAVELLY SAND, SLIGHTLY MOIST		SP	N/A	PID=0 ppm α=0 ppm βΓ=40 cpm
53.0 54.5	112947 04/29/93 13:45	6 20 40	9	VERY DENSE, DARK YELLOWISH BROWN (10YR, 4/4), WELL GRADED SAND WITH SOME GRAVEL, WET		SW	N/A	PID=0 ppm α=0 ppm βΓ=60 cpm
54.5 56.0	112948 04/29/93 14:05	9 13 16	12	MEDIUM DENSE, DARK YELLOWISH BROWN, (10YR, 4/4), POORLY GRADED, SAND WITH SOME GRAVEL, WET		SP	N/A	PID=0 ppm α=0 ppm βΓ=40-60 cpm
56.0 57.5	112949 04/29/93 15:45	9 11 17	18	MEDIUM DENSE, DARK YELLOWISH BROWN (10YR, 4/4), WELL GRADED SAND WITH SOME GRAVEL, WET		SW	N/A	PID=0 ppm α=0 ppm βΓ=40 cpm
57.5 59.0	112950 04/29/93 16:05	7 18 28	18	DENSE, DARK YELLOWISH BROWN (10YR, 4/4), POORLY GRADED SAND WITH SOME GRAVEL, WET		SP	N/A	PID=0 ppm α=0 ppm βΓ=40-60 cpm
59.0 60.5	112951 04/29/93 16:20	4 8 10	18	MEDIUM DENSE, DARK GRAYISH BROWN (10YR, 4/2), POORLY GRADED SAND WITH SOME GRAVEL, WET		SP	N/A	PID=0 ppm α=0 ppm βΓ=60 cpm
60.5 62.0	112952 04/29/93 16:35	10 12 20	18	DENSE, DARK GRAYISH BROWN (10YR, 4/2), POORLY GRADED SAND WITH SOME GRAVEL, WET		SP	N/A	PID=0 ppm α=0 ppm βΓ=60 cpm
62.0 63.5	112953 04/30/93 09:20	22 17 19	18	DENSE, DARK GRAYISH BROWN (10YR, 4/2), POORLY GRADED SAND WITH SOME GRAVEL, WET		SP	N/A	PID=0 ppm α=0 ppm βΓ=40-60 cpm
63.5 65.0	112954 04/30/93 09:40	8 10 12	18	MEDIUM DENSE, DARK GRAYISH BROWN (10YR, 4/2), WELL GRADED SAND WITH SOME GRAVEL, WET		SW	N/A	PID=0 ppm α=0 ppm βΓ=40-60 cpm
65.0 70.0	04/30/93 00:00	N/A	N/A	SPLIT SPOON SAMPLED TO 65' BOTTOM OF BORING AT 70'		N/A	N/A	

NOTES:

Boring Contractor: PENNSYLVANIA DRILLING
Driller: DAVE NEWMAN

SAA = Same as Above
PID = Photoionization Detector
N/A = Not Applicable

0444

PROJECT NUMBER: 602 3.2	PROJECT NAME: CRU2 RI PHASE I FIELD INVESTIGATION	
BORING NUMBER: 4016	COORDINATES: NORTH 477618.74 EAST 1379138.31	DATE:16-DEC-88
GROUND ELEVATION: 539.7	GWL: Depth Date/Time	DATE STARTED: 16-DEC-88
ENGINEER/GEOLOGIST: M. SLUSARSKI	Depth Date/Time	DATE COMPLETE: 10-JAN-89

DRILLING METHOD: CABLE-TOOL DRILLING

DEPTH	SAMPLE	DATE TIME	BLOWS ON SAMPLE	RECOVERY INCHES		USCS SYMBOL	TSF	REMARKS
25.0 26.5	010436 12/17/88 10:38	5 5 7	12	MEDIUM DENSE, GREY-BROWN (10 YR 4/2) WELL GRADED GRAVELLY SAND, TRACE MEDIUM GRAVEL (.25 - .5 IN) WET		SW	N/A	PID=0 ppm α=0 ppm βΓ=40-60 cpm
30.0 31.5	010437 12/17/88 11:45	7 7 8	18	MEDIUM DENSE, GREY-BROWN (10 YR 4/2) WELL GRADED GRAVELLY SAND, SOME FINE GRAVEL (.25 IN) WET		SW	N/A	PID=0 ppm α=0-2 ppm βΓ=40-60 cpm
35.0 36.5	010438 12/17/88 13:25	19 24 25	14	DENSE, YELLOW-BROWN (10 YR 5/3) WELL GRADED GRAVEL SAND MIXTURE, TRACE COARSE GRAVEL (1.0 - 1.5 IN) WET		GW	N/A	PID=0 ppm α=0-2 ppm βΓ=40-60 cpm
40.0 41.5	010439 12/17/88 13:50	3 4 8	12	LOOSE, GREY-BROWN (10 YR 4/2) WELL GRADED GRAVELLY SAND, GRAVEL (.25 - .50 IN) WET		SW	N/A	PID=0 ppm α=0-2 ppm βΓ=40-60 cpm
45.0 46.5	010440 12/17/88 15:30	20 25 35	14	VERY DENSE, GREY-BROWN (10 YR 4/2) POORLY GRADED SAND, SOME FINE GRAVEL (LESS THAN .25 IN) WET		SP	N/A	PID=0 ppm α=0-2 ppm βΓ=40-50 cpm
50.0 51.5	010441 12/18/88 09:00	19 17 15	14	DENSE, GREY-BROWN (10 YR 4/2) WELL GRADED GRAVELLY SAND, SOME MEDIUM GRAVEL (.25 - .50 IN) WET. MEDIUM DENSE, GREY-BROWN (10 YR 4/2) WELL GRADED GRAVEL (.25 - 1.0 IN), SOME SAND, WET.		SW GW	N/A	PID=0 ppm α=0-2 ppm βΓ=40-60 cpm
55.0 56.5	010442 12/19/88 10:25	8 27 33	12	VERY DENSE, PALE BROWN (10 YR 6/3) WELL GRADED GRAVELLY SAND, WET.		SW	N/A	PID=0 ppm α=0-2 ppm βΓ=40-60 cpm
60.0 61.5	010443 12/19/88 11:00	5 3 4	15	LOOSE, YELLOW-BROWN (10 YR 5/4) POORLY GRADED SAND, SOME GRAVEL, WET.		SP	N/A	PID=0 ppm α=0-1 ppm βΓ=40-60 cpm
65.0 66.5	010444 12/19/88 13:30	9 3 8	17	MEDIUM DENSE, BROWN (10 YR 5/3) POORLY GRADED SAND, LESS THAN 5.0% GRAVEL, WET		SP	N/A	PID=0 ppm α=0-1 ppm βΓ=40-60 cpm
70.0 71.5	010445 12/19/88 13:50	3 3 4	5	LOOSE, GREY-BROWN (10 YR 5/2) POORLY GRADED SAND, LESS THAN 5.0% GRAVEL, WET		SP	N/A	PID=0 ppm α=0-1 ppm βΓ=40-60 cpm
75.0 76.5	010446 12/19/88 15:10	14 23 21	15	DENSE, YELLOW-BROWN (10 YR 5/6) POORLY GRADED SAND, LESS THAN 10.0 PERCENT GRAVEL, WET		SP	N/A	PID=0 ppm α=0 ppm βΓ=40-60 cpm
80.0 81.5	010447 12/19/88 15:30	3 4 8	10	MEDIUM DENSE, GREY-BROWN (10 YR 5/2) POORLY GRADED SAND, LESS THAN 1.0 PERCENT GRAVEL WET		SP	N/A	PID=0 ppm α=0 ppm βΓ=40-60 cpm
85.0 86.5	010448 12/19/88 17:00	30 33 30	12	VERY DENSE, DARK GREY-BROWN (10 YR 4/2), POORLY GRADED SAND, LESS THAN 5.0 PERCENT GRAVEL, WET		SP	N/A	PID=0 ppm α=0 ppm βΓ=40-80 cpm

NOTES:

SAA = Same as Above
PID = Photoionization Detector
N/A = Not Applicable

0445

PROJECT NUMBER: 602 3.2	PROJECT NAME: CRU2 RI PHASE I FIELD INVESTIGATION	
BORING NUMBER: 4016	COORDINATES: NORTH 477618.74 EAST 1379138.31	DATE:16-DEC-88
GROUND ELEVATION: 539.7	GWL: Depth Date/Time	DATE STARTED: 16-DEC-88
ENGINEER/GEOLOGIST: M. SLUSARSKI	Depth Date/Time	DATE COMPLETE: 10-JAN-89
DRILLING METHOD: CABLE-TOOL DRILLING		

DEPTH	SAMPLE	DATE TIME	BLOWS ON SAMPLE	RECOVERY INCHES		USCS SYMBOL	TSF	REMARKS
95.0 96.5	010450	12/20/88 13:40	6 14 17	15	STIFF, DARK GREY (10 YR 4/1) INORGANIC CLAY, MEDIUM PLASTICITY DAMP	CL	1.25	PID=0 ppm α=0 ppm βΓ=40-60 cpm
100.0 101.0	010451	12/20/88 15:00	29 39 39	14	VERY DENSE, OLIVE GREY (5 Y 4/1) WELL GRADED GRAVEL SAND MIXTURE, GRAVEL (.25 - 1.5 IN) WET	GW	N/A	PID=0 ppm α=0 ppm βΓ=40-60 cpm
110.0 111.5	010453	12/20/88 17:00	20 12 11	6	MEDIUM DENSE, DARK GREY (10 YR 4/1) WELL GRADED GRAVEL SAND MIXTURE, GRAVEL (.25 - 1.5 IN) WET	GW	N/A	PID=0 ppm α=0 ppm βΓ=40-60 cpm
115.0 116.5	010454	12/21/88 09:15	19 21 24	12	DENSE, OLIVE GREY (5 Y 4/2) POORLY GRADED FINE SAND, WET	SP	N/A	PID=0 ppm α=0 ppm βΓ=40-60 cpm
120.0 121.5	010455	12/21/88 09:40	10 14 17	10	MEDIUM DENSE, OLIVE GRAY (5 Y 4/2), POORLY GRADED FINE SAND, WET.	SP	N/A	PID=0 ppm α=0 ppm βΓ=40-60 cpm
130.0 131.5	010457	12/21/88 15:20	5 10 12	16	MEDIUM DENSE, OLIVE-GRAY (5 Y 4/2) POORLY GRADED, FINE SAND, WET. MEDIUM DENSE, OLIVE-GRAY (5 Y 4/2) WELL GRADED SAND, TRACE MEDIUM GRAVEL (.25 - .50 IN) WET.	SP SW	N/A N/A	PID=0 ppm α=0 ppm βΓ=40-60 cpm
135.0 136.5	010458	12/21/88 16:50	21 44 33	18	VERY DENSE, OLIVE GRAY (5 Y 4/2) POORLY GRADED SAND, SOME FINE GRAVEL (.25 IN) WET.	SP	N/A	PID=0 ppm α=0 ppm βΓ=40-60 cpm
140.0 141.5	010459	01/03/89 09:10	4 6 8	12	MEDIUM DENSE, OLIVE GRAY (5 Y 4/2) WELL GRADED SAND, TRACE OF COARSE GRAVEL (1.0-2.0 IN.) WET.	SW	N/A	PID=0 ppm α=0 ppm βΓ=40-60 cpm
145.0 146.5	010460	01/03/89 13:50	18 35 34	14	VERY DENSE, OLIVE-BROWN (2.5 Y 4/4) POORLY GRADED SAND, TRACE FINE GRAVEL (LESS THAN .25 IN) WET	SP	N/A	PID=0 ppm α=0 ppm βΓ=40-60 cpm
150.0 151.5	010461	01/03/89 14:40	5 10 10	12	MEDIUM DENSE, OLIVE-BROWN (2.5 Y 4/4) POORLY GRADED SAND, TRACE FINE GRAVEL (LESS THAN .25 IN), WET	SP	N/A	PID=0 ppm α=0 ppm βΓ=40-60 cpm
155.0 156.5	010462	01/03/89 16:50	6 7 10	14	MEDIUM DENSE, OLIVE-BROWN (2.5 Y 4/4) POORLY GRADED SAND, TRACE MEDIUM GRAVEL (.25-.50 IN) WET.	SP	N/A	PID=0 ppm α=0 ppm βΓ=40-60 cpm
160.0 161.5	010463	01/04/89 13:25	18 27 34	12	VERY DENSE BROWN (2.5 Y 5/2) POORLY GRADED SAND, TRACE MEDIUM GRAVEL (.25-.50 IN) WET. VERY STIFF, OLIVE-GRAY (5 Y 4/1) GRAVELLY CLAY, SOME SAND, WET.	SP CL	N/A 2.5	PID=0 ppm α=0 ppm βΓ=40-60 cpm

NOTES:

SAA = Same as Above
PID = Photoionization Detector
N/A = Not Applicable

0446

TABLE E-20

MONITORING WELL INSTALLATION RECORD

PROJECT NAME: Fernald Environmental Management Project	**PROJECT LOCATION:** Fernald
BORING ID NO: 1016	**COUNTY:** Hamilton
PROJECT ID: NA	**STATE:** Ohio
DATE INSTALLED: October 16, 1987	**CONTRACTOR:** NA
FIELD ENG./GEOL.: D. Oakley	**DRILLED BY:** NA
TYPE OF SEAL: Bentonite	**DRILLING METHOD:** Cable-Tool Drilling
DEVELOPEMENT METHOD: NA	**TYPE OF BIT:** Flat Head Hammer
SURVEY DATUM	**SAND PACK TYPE:** NA
	WATER LEVEL/DATE: NA

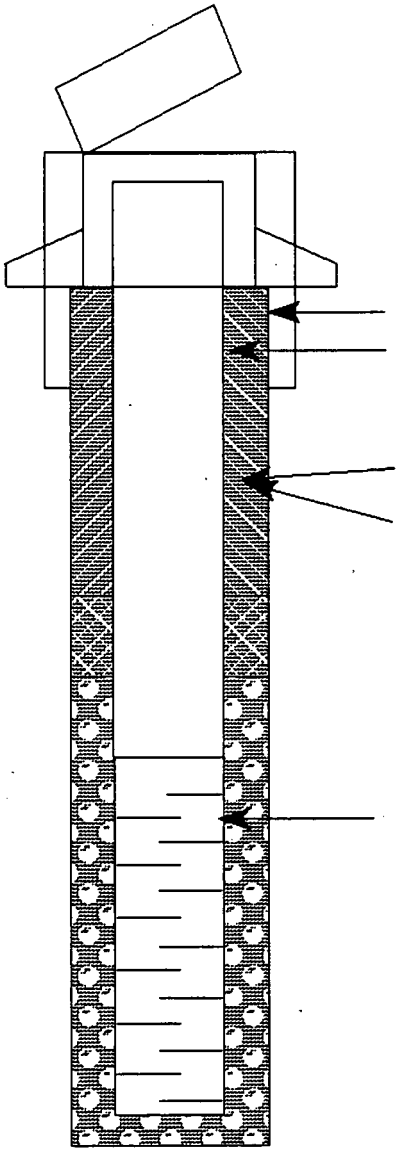

542.4 ft, Top of Casing (Protective pipe)
541.85 ft, Top of Well
540.7 ft, Concrete Elevation
540.2 ft, Ground Elevation
10 3/8 in, Boring Diameter
4 in, Casing Diameter
-2.5 Bottom Protective Pipe
S. S. Casing Material
■ Grout
□ Other _____
8 ft, Top of Bentonite
22.5 ft, Bottom of Bentonite
10.2 ft, Top of Screen
Well Screen
4 ID in, Diameter
.01 in, Slot
10 Length (ft)
S. S. Material
20.2 ft, Bottom of Screen
22.5 ft, Bottom of Boring

Note: Elevations in feet above mean sea level.

TABLE E-20

MONITORING WELL INSTALLATION RECORD

PROJECT NAME: Fernald Environmental Management Project	**PROJECT LOCATION:** Fernald
BORING ID NO: 1047	**COUNTY:** Hamilton
PROJECT ID: NA	**STATE:** Ohio
DATE INSTALLED: October 17, 1987	**CONTRACTOR:** NA
FIELD ENG./GEOL.: L. Wille	**DRILLED BY:** NA
TYPE OF SEAL: Bentonite	**DRILLING METHOD:** Cable-Tool Drilling
DEVELOPEMENT METHOD: NA	**TYPE OF BIT:** Flat Head Hammer
SURVEY DATUM	**SAND PACK TYPE:** NA
	WATER LEVEL/DATE: NA

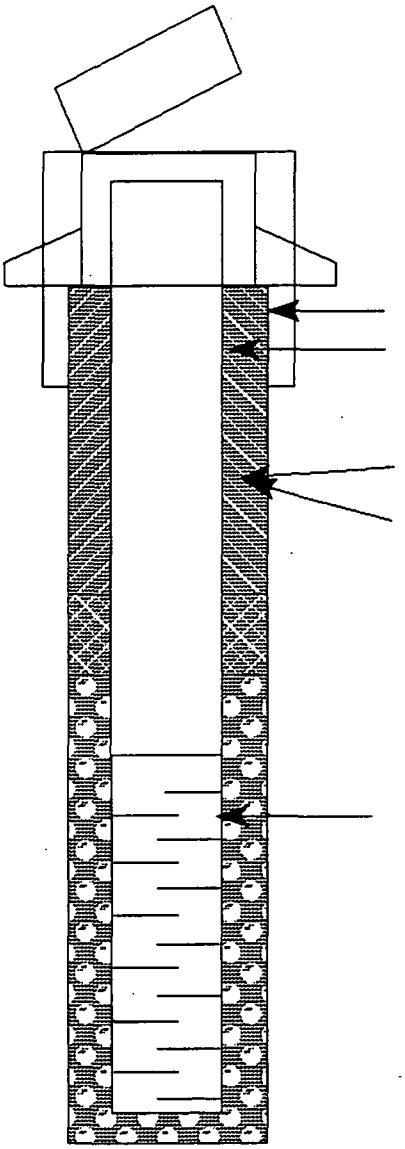

571.49 ft, Top of Casing (Protective pipe)
571.07 ft, Top of Well
569.1 ft, Concrete Elevation
568.7 ft, Ground Elevation
10 3/8 in, Boring Diameter
4 in, Casing Diameter
2.5 Bottom Protective Pipe
S. S. Casing Material
☐ Grout
■ Other Bentonite
0 ft, Top of Bentonite
5 ft, Bottom of Bentonite
7 ft, Top of Screen

Well Screen

4 ID in, Diameter
.01 in, Slot
10 Length (ft)
S. S. Material

17 ft, Bottom of Screen
20 ft, Bottom of Boring

Note: Elevations in feet above mean sea level.

TABLE E-20

MONITORING WELL INSTALLATION RECORD

PROJECT NAME: Fernald Environmental Management Project	**PROJECT LOCATION:** Fernald
BORING ID NO: 1711	**COUNTY:** Hamilton
PROJECT ID: NA	**STATE:** Ohio
DATE INSTALLED: May 30, 1991	**CONTRACTOR:** NA
FIELD ENG./GEOL.: J. Lear	**DRILLED BY:** NA
TYPE OF SEAL: Bentonite	**DRILLING METHOD:** Auger
DEVELOPEMENT METHOD: NA	**TYPE OF BIT:** Hollow Stem Auger
SURVEY DATUM	**SAND PACK TYPE:** NA
	WATER LEVEL/DATE: NA

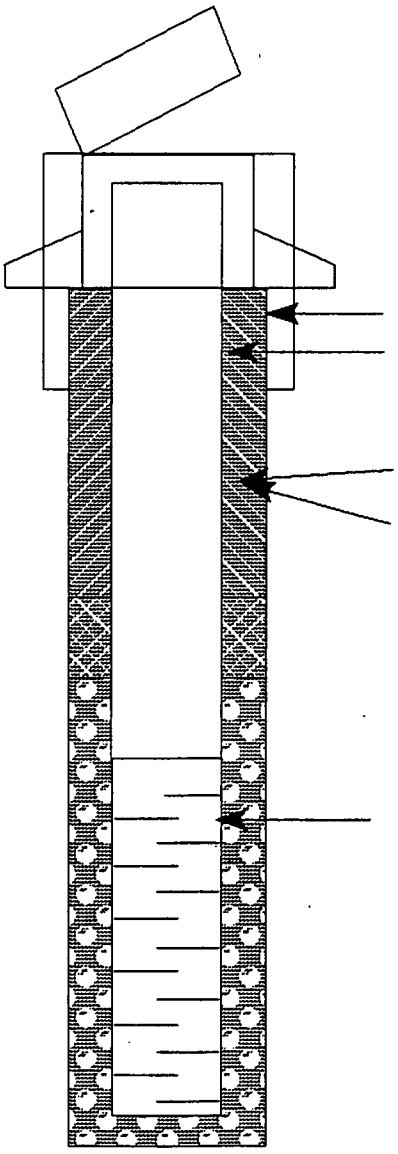

578.97 ft, Top of Casing (Protective pipe)
578.58 ft, Top of Well
576.81 ft, Concrete Elevation
576.47 ft, Ground Elevation
10 in, Boring Diameter
4 in, Casing Diameter
2.5 Bottom Protective Pipe
S. S. Casing Material
■ Grout
□ Other _____
10.5 ft, Top of Bentonite
11 ft, Bottom of Bentonite
13 ft, Top of Screen
Well Screen
4 ID in, Diameter
.01 in, Slot
2 Length (ft)
S. S. Material
15 ft, Bottom of Screen
15.5 ft, Bottom of Boring

Note: Elevations in feet above mean sea level.

0449

TABLE E-20

MONITORING WELL INSTALLATION RECORD

PROJECT NAME: Fernald Environmental Management Project	**PROJECT LOCATION:** Fernald
BORING ID NO: 2014	**COUNTY:** Hamilton
PROJECT ID: NA	**STATE:** Ohio
DATE INSTALLED: NA	**CONTRACTOR:** NA
FIELD ENG./GEOL.: NA	**DRILLED BY:** NA
TYPE OF SEAL: NA	**DRILLING METHOD:** NA
DEVELOPEMENT METHOD: NA	**TYPE OF BIT:** NA
SURVEY DATUM	**SAND PACK TYPE:** NA
	WATER LEVEL/DATE: NA

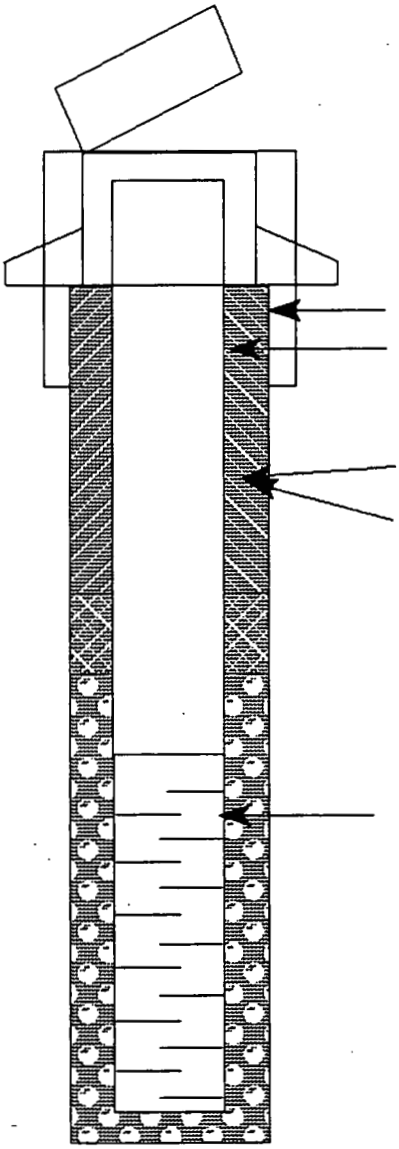

535.94 ft, Top of Casing (Protective pipe)
534.92 ft, Top of Well
533.9 ft, Concrete Elevation
NA ft, Ground Elevation
NA in, Boring Diameter
NA in, Casing Diameter
NA Bottom Protective Pipe
NA Casing Material
☐ Grout
☐ Other _____
NA ft, Top of Bentonite
NA ft, Bottom of Bentonite
NA ft, Top of Screen

Well Screen

NA in, Diameter
NA in, Slot
NA Length (ft)
NA Material
NA ft, Bottom of Screen
NA ft, Bottom of Boring

Note: Elevations in feet above mean sea level.

TABLE E-20

MONITORING WELL INSTALLATION RECORD

PROJECT NAME: Fernald Environmental Management Project	**PROJECT LOCATION:** Fernald
BORING ID NO: 2047	**COUNTY:** Hamilton
PROJECT ID: NA	**STATE:** Ohio
DATE INSTALLED: January 3, 1989	**CONTRACTOR:** NA
FIELD ENG./GEOL.: W. Hertel	**DRILLED BY:** NA
TYPE OF SEAL: Bentonite	**DRILLING METHOD:** Cable-Tool Drilling
DEVELOPEMENT METHOD: NA	**TYPE OF BIT:** Flat Head Hammer
SURVEY DATUM	**SAND PACK TYPE:** NA
	WATER LEVEL/DATE: NA

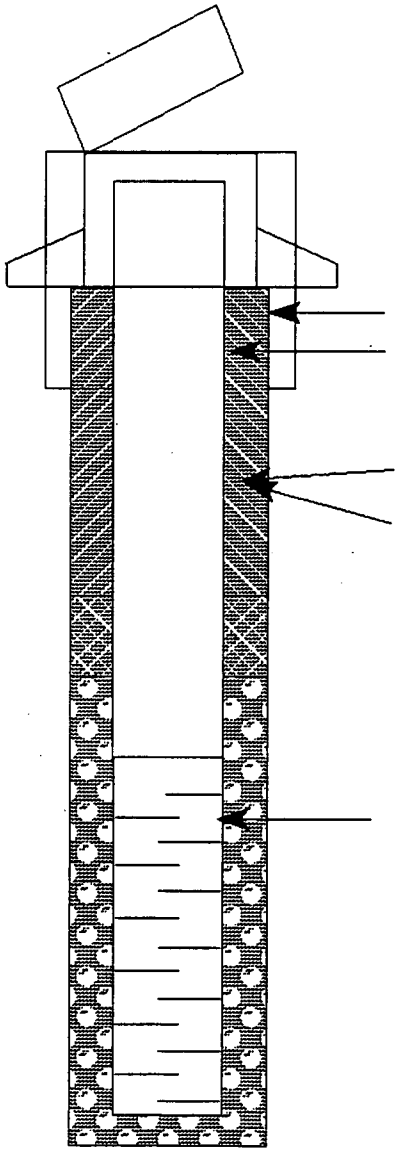

570.51 ft, Top of Casing (Protective pipe)
570.03 ft, Top of Well
568.95 ft, Concrete Elevation
568.45 ft, Ground Elevation
10 3/8 in, Boring Diameter
4 in, Casing Diameter
2.5 Bottom Protective Pipe
S. S. Casing Material
■ Grout
□ Other _____
35 ft, Top of Bentonite
39.9 ft, Bottom of Bentonite
45.3 ft, Top of Screen
Well Screen
4 ID in, Diameter
.01 in, Slot
15 Length (ft)
S. S. Material
60.3 ft, Bottom of Screen
64 ft, Bottom of Boring

Note: Elevations in feet above mean sea level.

TABLE E-20

MONITORING WELL INSTALLATION RECORD

PROJECT NAME: Fernald Environmental Management Project	**PROJECT LOCATION:** Fernald
BORING ID NO: 2402	**COUNTY:** Hamilton
PROJECT ID: NA	**STATE:** Ohio
DATE INSTALLED: December 22, 1991	**CONTRACTOR:** NA
FIELD ENG./GEOL.: NA	**DRILLED BY:** NA
TYPE OF SEAL: Bentonite	**DRILLING METHOD:** Cable Tool Drilling
DEVELOPEMENT METHOD: NA	**TYPE OF BIT:** Cable Tool
SURVEY DATUM	**SAND PACK TYPE:** NA
	WATER LEVEL/DATE: NA

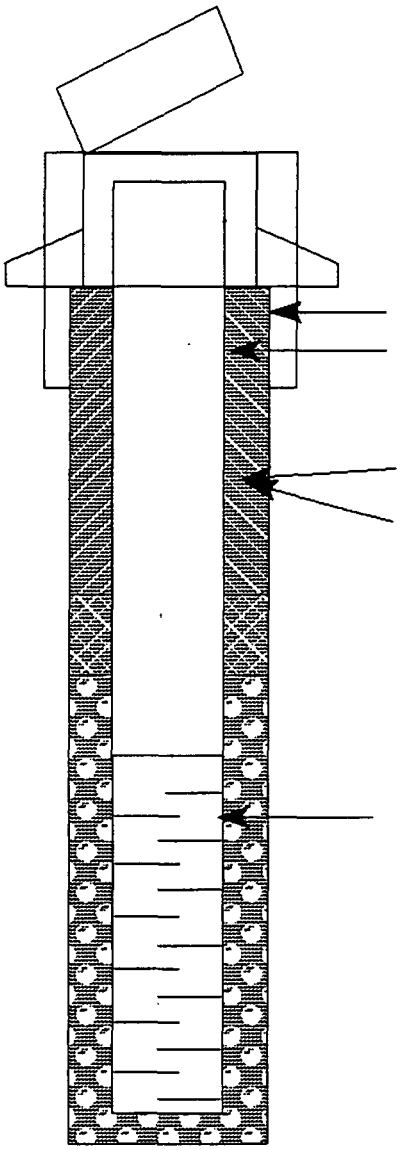

569.69 ft, Top of Casing (Protective pipe)
568.99 ft, Top of Well
NA ft, Concrete Elevation
567.1 ft, Ground Elevation
10 3/8 in, Boring Diameter
4 in, Casing Diameter
2.2 Bottom Protective Pipe
S. S. Casing Material
■ Grout
□ Other _____
34.5 ft, Top of Bentonite
40.5 ft, Bottom of Bentonite
45 ft, Top of Screen
Well Screen
4 ID in, Diameter
.01 in, Slot
15 Length (ft)
S. S. Material
60 ft, Bottom of Screen
62 ft, Bottom of Boring

Note: Elevations in feet above mean sea level.

5174

TABLE E-20

MONITORING WELL INSTALLATION RECORD

PROJECT NAME: Fernald Environmental Management Project	**PROJECT LOCATION:** Fernald
BORING ID NO: 2955	**COUNTY:** Hamilton
PROJECT ID: 20.03.05	**STATE:** Ohio
DATE INSTALLED: May 5, 1993	**CONTRACTOR:** Pennsylvania Drilling
FIELD ENG./GEOL.: Ken Geiger	**DRILLED BY:** Dave Newman
TYPE OF SEAL: Grout/Slurry	**DRILLING METHOD:** Cable Tool
DEVELOPEMENT METHOD: Bail-Surge-Bail	**TYPE OF BIT:** Hammer Percussion Bit
SURVEY DATUM	**SAND PACK TYPE:** 10/20 Silica
	WATER LEVEL/DATE: 523.99/5-7-93

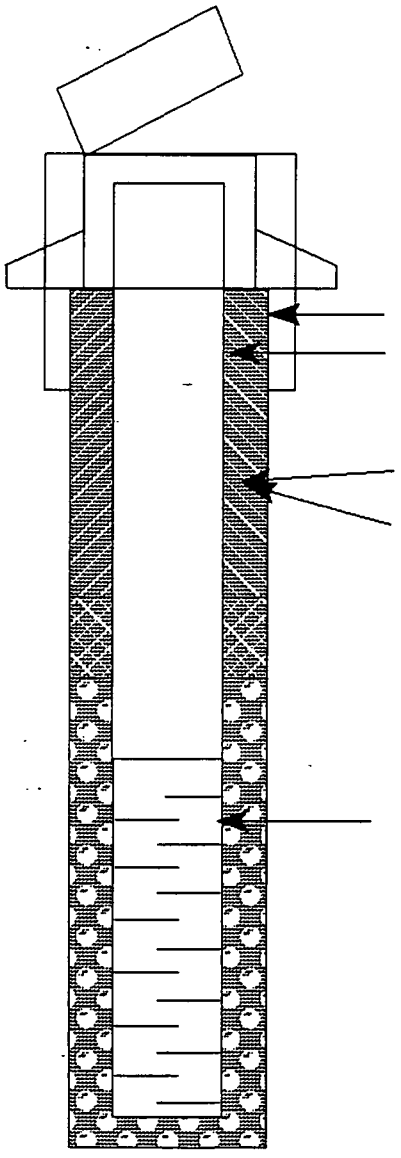

579.55 ft, Top of Casing (Protective pipe)
579.13 ft, Top of Well
NA ft, Concrete Elevation
577.2 ft, Ground Elevation
10 3/8 in, Boring Diameter
4 in, Casing Diameter
2.5 Bottom Protective Pipe
S. S. Casing Material
■ Grout
□ Other _____
1 ft, Top of Bentonite
40 ft, Bottom of Bentonite
50 ft, Top of Screen
Well Screen
4 in, Diameter
.01 in, Slot
15 Length (ft)
S. S. Material
65 ft, Bottom of Screen
70 ft, Bottom of Boring

Note: Elevations in feet above mean sea level.

0453

TABLE E-20

MONITORING WELL INSTALLATION RECORD

PROJECT NAME: Fernald Environmental Management Project	**PROJECT LOCATION:** Fernald
BORING ID NO: 3014	**COUNTY:** Hamilton
PROJECT ID: NA	**STATE:** Ohio
DATE INSTALLED: NA	**CONTRACTOR:** NA
FIELD ENG./GEOL.: NA	**DRILLED BY:** NA
TYPE OF SEAL: NA	**DRILLING METHOD:** NA
DEVELOPEMENT METHOD: NA	**TYPE OF BIT:** NA
SURVEY DATUM	**SAND PACK TYPE:** NA
	WATER LEVEL/DATE: NA

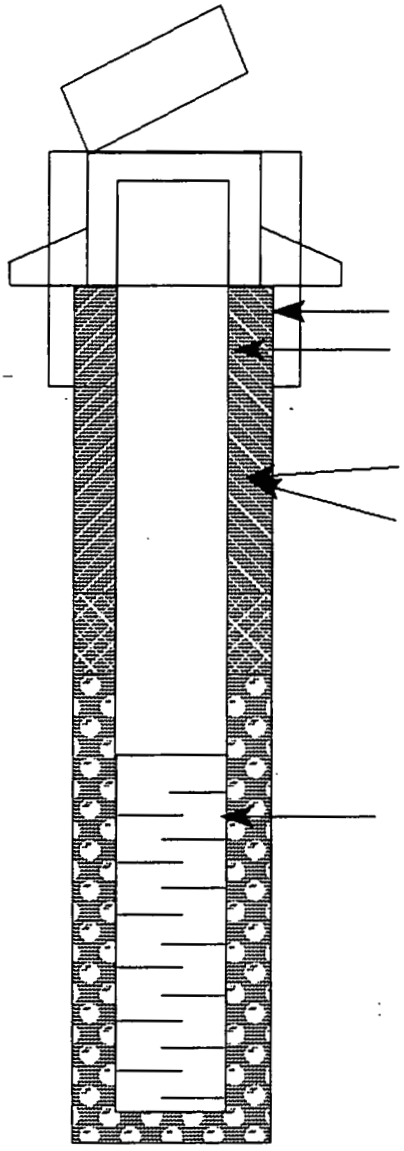

535.97 ft, Top of Casing (Protective pipe)
543.25 ft, Top of Well
533.9 ft, Concrete Elevation
NA ft, Ground Elevation
NA in, Boring Diameter
NA in, Casing Diameter
NA Bottom Protective Pipe
NA Casing Material
☐ Grout
☐ Other _____
NA ft, Top of Bentonite
NA ft, Bottom of Bentonite
NA ft, Top of Screen

Well Screen

NA in, Diameter
NA in, Slot
NA Length (ft)
NA Material

NA ft, Bottom of Screen
NA ft, Bottom of Boring

Note: Elevations in feet above mean sea level.

0454

TABLE E-20

MONITORING WELL INSTALLATION RECORD

PROJECT NAME: Fernald Environmental Management Project	**PROJECT LOCATION:** Fernald
BORING ID NO: 3016	**COUNTY:** Hamilton
PROJECT ID: NA	**STATE:** Ohio
DATE INSTALLED: NA	**CONTRACTOR:** NA
FIELD ENG./GEOL.: NA	**DRILLED BY:** NA
TYPE OF SEAL: NA	**DRILLING METHOD:** NA
DEVELOPEMENT METHOD: NA	**TYPE OF BIT:** NA
SURVEY DATUM	**SAND PACK TYPE:** NA
	WATER LEVEL/DATE: NA

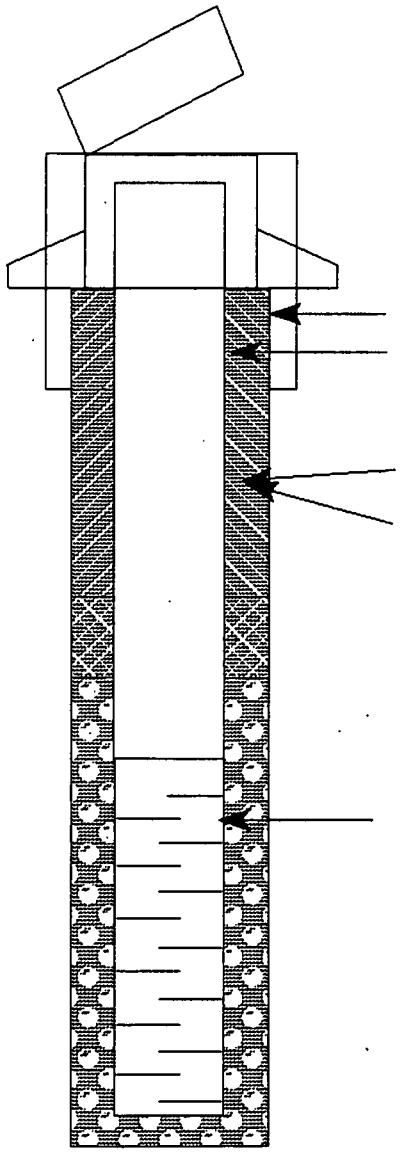

542.25 ft, Top of Casing (Protective pipe)
541.98 ft, Top of Well
540.6 ft, Concrete Elevation
NA ft, Ground Elevation
NA in, Boring Diameter
NA in, Casing Diameter
NA Bottom Protective Pipe
NA Casing Material
☐ Grout
☐ Other _____
NA ft, Top of Bentonite
NA ft, Bottom of Bentonite
NA ft, Top of Screen
Well Screen
NA in, Diameter
NA in, Slot
NA Length (ft)
NA Material
NA ft, Bottom of Screen
NA ft, Bottom of Boring

Note: Elevations in feet above mean sea level.

TABLE E-20

MONITORING WELL INSTALLATION RECORD

PROJECT NAME: Fernald Environmental Management Project	**PROJECT LOCATION:** Fernald
BORING ID NO: 4014	**COUNTY:** Hamilton
PROJECT ID: NA	**STATE:** Ohio
DATE INSTALLED: November 9, 1988	**CONTRACTOR:** NA
FIELD ENG./GEOL.: E. Tollinger	**DRILLED BY:** NA
TYPE OF SEAL: Grout	**DRILLING METHOD:** Cable-Tool Drilling
DEVELOPEMENT METHOD: NA	**TYPE OF BIT:** Flat Head Hammer
SURVEY DATUM	**SAND PACK TYPE:** NA
	WATER LEVEL/DATE: NA

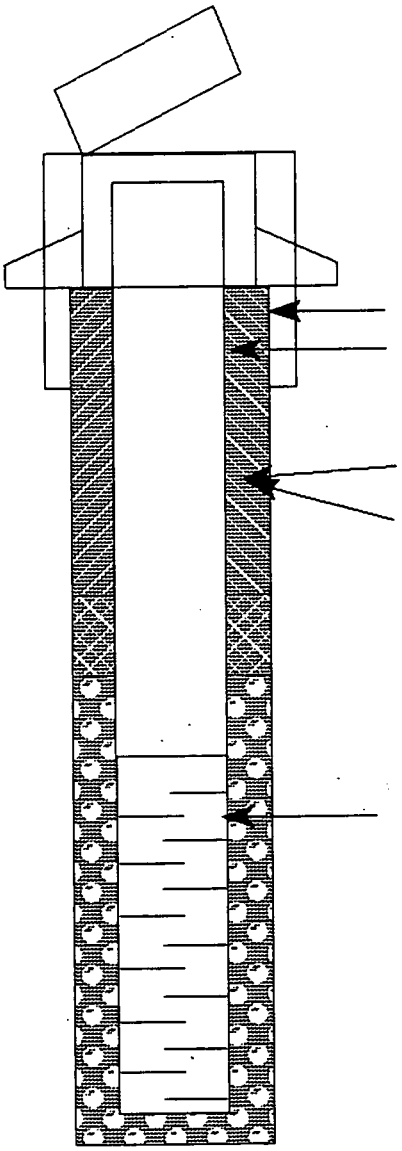

535.88 ft, Top of Casing (Protective pipe)
535.43 ft, Top of Well
NA ft, Concrete Elevation
533.4 ft, Ground Elevation
10 3/8 in, Boring Diameter
4 in, Casing Diameter
2.5 Bottom Protective Pipe
S. S. Casing Material
■ Grout
□ Other _____
0 ft, Top of Bentonite
121 ft, Bottom of Bentonite
129.5 ft, Top of Screen

Well Screen

4 ID in, Diameter
.01 in, Slot
10 Length (ft)
S. S. Material

139.5 ft, Bottom of Screen
150 ft, Bottom of Boring

Note: Elevations in feet above mean sea level.

TABLE E-21A

INACTIVE FLYASH PILE
GROUNDWATER ELEVATION DATA[a], 1988 - 1992
OPERABLE UNIT 2 REMEDIAL INVESTIGATION
FERNALD ENVIRONMENTAL MANAGEMENT PROJECT

Year	Well No.	January	February	March	April	May	June	July	August	September	October	November	December
1988	1016	519.62	520.73	521.69	522.35	521.44	520.61	519.96	519.45	519.17	518.98	518.02	NMT[b]
1988	1047	557.89	562.53	565.94	555.93	561.67	561.51	559.53	554.84	556.15	556.05	553.86	556.19
1988	2016	519.70	520.83	521.79	522.35	521.44	520.61	519.95	519.44	518.89	518.41	518.06	517.89
1989	1016	518.17	519.58	521.13	523.23	524.15	524.50	523.25	523.34	521.98	521.48	521.36	520.77
1989	1047	558.10	561.15	566.05	559.09	565.92	565.46	562.57	560.53	559.98	558.21	559.85	553.60
1989	1048	565.46	566.33	568.90	569.09	569.52	568.45	566.28	564.82	565.46	563.35	566.34	565.10
1989	2016	519.13	519.57	521.12	523.23	524.14	524.49	523.28	522.40	522.00	519.94	521.44	520.86
1989	2047	518.68	519.49	520.68	522.80	523.85	524.41	523.26	522.42	522.00	521.46	521.19	520.90
1990	1016	521.56	523.03	524.18	524.57	525.74	525.37	524.46	NMT	NMT	523.51	523.73	523.94
1990	1047	563.13	565.77	560.32	560.43	567.40	564.16	563.51	562.26	560.15	555.29	562.61	565.00
1990	2016	521.57	523.50	524.19	524.58	525.77	525.37	524.48	523.43	522.70	523.54	523.75	523.94
1990	2047	521.46	522.82	523.93	524.31	525.31	525.31	526.46	523.56	522.82	523.45	523.70	524.22
1991	1016	525.36	525.57	525.57	NMT	525.09	NMT	523.98	522.33	521.95	521.07	520.44	519.77
1991	1047	566.82	566.01	567.05	NMT	563.73	NMT	559.79	558.47	558.03	556.90	556.49	556.40
1991	1711	NMT	NMT	NMT	NMT	NMT	NMT	562.34	562.36	562.36	562.33	562.37	562.36
1991	2016	525.21	525.59	525.60	NMT	525.13	NMT	523.00	522.33	521.97	521.09	520.44	519.82
1991	2047	525.14	525.53	525.51	NMT	525.24	NMT	523.12	522.41	521.99	521.00	520.46	519.77
1992	1016	520.12	520.25	520.09	520.73	NMT	519.92	520.71	520.36	520.03	520.01	520.13	521.11
1992	1047	556.09	560.10	562.61	565.31	NMT	565.65	561.77	562.11	560.23	559.45	559.27	562.17
1992	1711	562.36	562.33	562.35	NMT	NMT	562.38	562.20	562.18	DRY	DRY	DRY	562.20
1992	2016	520.12	520.26	520.09	520.79	NMT	NMT	NMT	NMT	NMT	NMT	NMT	521.13

See footnotes at end of table.

FER\CRU2RI\TLC\TABE-21A\February 3, 1994 5:07pm

0457
5174

TABLE E-21A
(Continued)

Year	Well No.	January	February	March	April	May	June	July	August	September	October	November	December
1992	2047	519.86	520.13	520.09	520.50	NMT	519.89	520.42	519.80	519.93	519.93	519.93	520.83
MISCELLANEOUS GROUNDWATER ELEVATION DATA													
1988	1025	NMT	569.82	570.33	570.04	561.54	568.34	570.85	571.07	571.16	570.88	570.75	570.63
1988	1064	NMT	NMT	NMT	NMT	NMT	NMT	NMT	NMT	NMT	NMT	NMT	559.92
1988	1080	NMT	NMT	NMT	NMT	560.15	567.24	567.55	560.89	567.71	567.83	567.73	568.18
1988	1081	575.10	575.95	576.69	576.89	575.49	575.35	575.05	575.04	574.95	574.71	574.68	575.05
1988	2068	517.88	518.34	519.34	520.10	520.17	519.75	518.81	518.17	517.52	517.13	516.50	516.58
1989	1025	570.34	563.52	570.48	569.89	571.37	571.73	571.75	571.95	DRY	570.27	571.62	570.84
1989	1064	566.90	577.59	577.35	577.55	577.06	574.76	573.94	NMT	573.44	571.12	573.28	572.46
1989	1080	568.61	568.40	567.77	NMT	568.95	568.74	568.06	568.05	566.85	566.62	568.66	NMT
1989	1081	575.73	575.87	576.69	576.65	576.72	575.25	575.64	570.27	575.51	575.35	575.53	575.10
1989	2068	516.43	517.38	518.45	520.65	522.20	523.52	522.80	521.94	521.14	519.17	519.98	519.75
1989	2106	NMT	518.78	520.45	522.23	523.09	523.43	522.40	521.51	NMT	519.07	520.35	519.97
1990	1025	570.63	NMT	NMT	570.95	570.38	571.63	571.84	567.72	572.08	572.27	569.76	571.57
1990	1064	573.71	576.65	NMT	575.50	575.41	574.95	NMT	573.03	572.98	565.36	574.30	576.57
1990	1080	567.98	568.72	NMT	568.72	564.65	568.64	NMT	568.37	568.69	567.36	NMT	569.46
1990	1081	575.63	563.32	NMT	576.00	577.49	576.13	576.07	575.79	575.71	577.05	575.75	NMT
1990	2068	519.49	520.14	NMT	522.23	522.74	523.68	523.02	522.66	521.59	521.59	521.85	521.85
1990	2106	520.57	521.75	522.81	523.05	524.29	523.65	523.20	522.32	521.84	522.66	522.35	522.62
1990	2385	NMT	NMT	NMT	NMT	524.11	519.57	523.73	523.07	522.22	522.46	522.73	522.83
1990	2397	NMT	NMT	NMT	NMT	NMT	NMT	NMT	522.61	521.93	521.99	521.99	522.21
1991	1025	571.37	566.77	NMT	NMT	NMT	570.50	571.58	571.89	NMT	572.11	572.19	571.59
1991	1032	NMT	NMT	NMT	NMT	NMT	NMT	NMT	NMT	NMT	559.11	559.10	559.49
1991	1064	579.80	579.37	579.57	NMT	NMT	575.18	NMT	573.24	NMT	NMT	NMT	NMT

See footnotes at end of table.

TABLE E-21A
(Continued)

Year	Well No	January	February	March	April	May	June	July	August	September	October	November	December
MISCELLANEOUS GROUNDWATER ELEVATION DATA (continued)													
1991	1080	569.21	568.91	NMT	NMT	NMT	565.70	564.22	NMT	NMT	NMT	NMT	NMT
1991	1081	NMT	NMT	NMT	NMT	NMT	576.54	NMT	NMT	NMT	NMT	NMT	NMT
1991	1907	NMT	NMT	NMT	NMT	NMT	NMT	DRY	NMT	NMT	NMT	NMT	NMT
1991	2068	524.12	524.08	524.14	NMT	NMT	523.41	521.98	520.74	NMT	519.36	518.68	517.85
1991	2106	524.05	522.99	524.35	NMT	NMT	523.34	NMT	521.21	520.90	NMT	NMT	NMT
1991	2385	524.71	524.10	524.73	NMT	524.34	NMT	522.45	521.71	521.28	520.40	519.74	519.00
1991	2397	524.46	524.38	524.26	NMT	NMT	523.38	521.97	521.20	520.62	519.79	519.08	518.27
1992	1025	572.19	568.27	NMT	NMT	NMT	570.89	565.54	572.03	572.39	571.88	571.64	571.29
1992	1032	561.02	559.05	559.09	559.50	NMT	560.49	561.05	559.17	559.46	560.17	560.88	559.16
1992	2068	517.60	517.60	517.44	517.56	NMT	517.29	518.63	519.52	519.07	518.71	518.68	519.37
1992	2385	518.98	519.05	518.89	519.23	NMT	519.20	NMT	519.91	519.87	519.47	519.49	520.25
1992	2397	517.99	518.07	517.95	518.18	NMT	518.63	518.91	NMT	519.33	519.01	519.00	519.63

[a]Feet above Mean Sea Level

[b]No measurement taken

0459
5124

TABLE E-21B

INACTIVE FLYASH PILE
GROUNDWATER ELEVATION DATA[a], 1993
PHASE II FIELD INVESTIGATION
OPERABLE UNIT 2 REMEDIAL INVESTIGATION
FERNALD ENVIRONMENTAL MANAGEMENT PROJECT

Well No.	03/18/93	03/23/93	04/09/93	04/19/93	05/07/93	05/19/93	06/02/93	06/21/93	07/08/93	07/19/93	08/02/93	08/16/93
1016	522.93	523.06	523.40	523.50	523.70	523.73	522.73	522.81	522.33	521.91	521.71	521.42
1047	566.48	566.50	565.38	566.27	NMT[b]	564.33	563.23	562.90	562.03	561.03	559.80	558.51
1711	563.55	563.56	563.52	563.56	563.52	563.26	563.00	562.72	562.56	562.40	562.37	DRY
2016	522.94	523.02	523.39	523.53	523.69	523.71	522.75	522.83	521.20	521.95	520.62	521.43
2047	522.51	522.56	523.13	523.25	523.48	523.51	522.77	522.78	522.31	521.47	521.71	521.34
2402	523.39	523.47	523.96	524.04	524.30	524.35	523.45	522.44	523.93	522.44	522.24	521.89
2955	NMT	NMT	NMT	NMT	523.99	524.01	NMT	523.15	522.71	522.23	522.09	521.69

[a]Feet above mean sea level

[b]No measurement taken

TABLE OF CONTENTS/LIST OF TABLES AND FIGURES
APPENDIX F - SOUTH FIELD

Table	Title	Page
F-1A	South Field Summary of RI/FS Sample Collection Activities Phase I Field Investigation	F-1-1
F-1B	South Field Summary of RI/FS Sample Collection Activities Phase II Field Investigation	F-1-11
F-2A	South Field Concentrations of Detected Analytes Above Background in Surface Soil Phase II Field Investigations	F-2-1
F-2B	South Field Concentrations of Detected Analytes Above Background in Subsurface Soil Phase I Field Investigations	F-2-14
F-2C	South Field Concentrations of Detected Analytes Above Background in Subsurface Soil Phase II Field Investigations	F-2-32
F-2D	South Field Concentrations of Detected Analytes Above Background in Surface Water Source Phase II Field Investigations	F-2-48
F-2E	South Field Concentrations of Detected Analytes Above Background in Sediment Phase II Field Investigations	F-2-50
F-2F	South Field Concentrations of Detected Analytes Above Background in Groundwater - 1000 Series Phase I Field Investigations	F-2-53
F-2G	South Field Concentrations of Detected Analytes Above Background in Groundwater - 1000 Series Phase II Field Investigations	F-2-55
F-2H	South Field Concentrations of Detected Analytes Above Background in Groundwater - 2000 Series Phase I Field Investigations	F-2-62
F-2I	South Field Concentrations of Detected Analytes Above Background in Groundwater - 2000 Series Phase II Field Investigations	F-2-67
F-2J	South Field Concentrations of Detected Analytes Above Background in Groundwater - 3000 and 4000 Series Phase I Field Investigations	F-2-71
F-3A	South Field RI/FS Surface Soil Results	F-3-1
F-3B	South Field Tentatively Identified Compounds Surface Soil	F-3-37
F-4	South Field CIS Surface Soil Radiological Results	F-4-1

TABLE OF CONTENTS
(Continued)

Table	Title	Page
F-5	South Field Surface Media Analyses Environmental Survey	F-5-1
F-6A	South Field RI/FS Subsurface Soil Results	F-6-1
F-6B	South Field Tentatively Identified Compounds Sediment and Subsurface Soil	F-6-141
F-7A	South Field CIS Subsurface Soil Results, Radiological Data	F-7-1
F-7B	South Field CIS Subsurface Soil Results, Non-Radiological Data	F-7-6
F-8	South Field Subsurface Media Environmental Survey	F-8-1
F-9	South Field RI/FS Sediment Results	F-9-1
F-10	South Field RI/FS Surface Water Results	F-10-1
F-11A	South Field RI/FS Groundwater Results	F-11-1
F-11B	South Field Tentatively Identified Compounds Water	F-11-111
F-12	South Field RI/FS TCLP Results	F-12-1
F-13	South Field RI/FS Quality Control Samples	F-13-1
F-14	South Field On-Site Laboratory RI/FS Screening Results Phase II Field Investigation	F-14-1
F-15A	South Field On-Site Laboratory CIS Screening Results Activity Concentrations in Profile Samples	F-15-1
F-15B	South Field CIS Surface Soil Radiological Results	F-15-8
F-15C	South Field CIS Fidler Surface Readings	F-15-60
F-15D	South Field CIS Exposure Rate Measurements	F-15-135
F-15E	South Field CIS Beta Gama Dose RATE Measurements	F-15-136

TABLE OF CONTENTS
(Continued)

Table	Title	Page
F-16A	South Field Geotechnical Analysis Phase I Field Investigation	F-16-1
F-16B	South Field Geotechnical Analysis Phase II Field Investigation	F-16-2
F-16C	South Field Sieve Analysis - ASTM D 422 Phase II Field Investigation	F-16-4
F-16D	South Field Hydrometer Analysis - ASTM D 422 Phase II Field Investigation	F-16-6
F-16E	South Field One Dimensional Consolidation - ASTM D 2435 Phase II Field Investigation	F-16-10
F-17A	South Field CIS Geophysical Analysis EM 31 Measurements	F-17-1
F-17B	South Field CIS Geophysical Analysis EM 34-3 Measurements	F-17-10
F-18A	South Field Boring Logs	F-18-1
F-18B	South Field Trenching Logs 1 through 10	F-18-166
F-19	Monitoring Well Installation Records	F-19-1
F-20A	South Field Groundwater Elevation Data, 1988-1992	F-20-1
F-20B	South Field Groundwater Elevation Data, 1993	F-20-5

0463

TABLE OF CONTENTS
(Continued)

Figure	Title	Page
F-15A	CIS Fidler Measurement Contours	F-15-142
F-15B	CIS Exposure Rate Contours	F-15-143
F-15C	CIS Beta Gamma Dose Rate Contours	F-15-144
F-17A	CIS Geophysical Analysis EM 31 Horizontal Contour Map	F-17-14
F-17B	CIS Geophysical Analysis EM 31 Vertical Contour Map	F-17-15
F-17C	CIS Geophysical Analysis EM 34-3 Horizontal Contour Map	F-17-16
F-17D	CIS Geophysical Analysis EM 34-3 Vertical Contour Map	F-17-17
F-17E	South Field RI/FS Phase II Investigation Geophysical Interpretation	F-17-18

KEY TO DATA TABLES

FLTD Filtered Status of the Sample (applies to water samples)

FILT	Filtered sample; filtered status identified on Request for Analysis/Chain of Custody
UNFI	Unfiltered sample; filtered status identified on Request for Analysis/Chain of Custody
*F	Filtered sample; filtered status not identified on Request for Analysis/Chain of Custody; determination based upon other field investigation documentation.
*U	Unfiltered sample; filtered status not identified on Request for Analysis/Chain of Custody; determination based upon other field investigation documentation.
UNKN	Unknown; filtered status could not be determined.

L Analytical Support Level (ASL)

The analytical support level for sample analyses and data validation, defined as follows:

A	*Qualitative Field Analysis* - Analogous to EPA analytical level 1.
B	*Qualitative, Semi-Quantitative, and Quantitative Analyses* - Analogous to EPA analytical level 2.
C	*Quantitative with fully defined QA/QC* - Laboratory analyses generated with full QA/QC checks of types and frequencies specified for ASL D according to FEMP-specified analytical protocols for radiological and nonradiological parameters. The analytical methods are identical to ASL D for QA/QC sample analysis and method performance criteria. However, the data package does not typically contain raw instrument output but does include summaries of QA/QC sample results. Laboratories are required to retain, in the project file, raw instrument data to upgrade ASL C reports to ASL D. Analogous to EPA analytical level 3.
D	*Confirmational with complete QA/QC and reporting* - Provides data generated with a full complement of QA/QC checks of specified types and frequencies according to FEMP-specified analytical protocols for radiological and nonradiological parameters. Analogous to EPA analytical level 4.
E	*Nonstandard* - Analyses by nonstandard protocols that often require method development or validation. Analogous to EPA analytical level 5.
NOTE:	The number 3 is sometimes used to indicate ASL C. Likewise, the numbers 4 and 5 are sometimes used to indicate ASLs D and E, respectively.

VQ Data Validation Qualifier

J	Analyte was analyzed for and positively identified, but the associated numerical value may not be consistent with the amount present in the environmental sample.

KEY TO DATA TABLES
(continued)

VQ Data Validation Qualifier (continued)

N	Analysis indicates that an analyte is present and there are strong indications that the identity is correct.
R	Data are unusable for any purpose. Analyte was analyzed for, but the presence or absence of the analyte was not verified.
U	Analyte was analyzed for and was not present above the level of the associated value. Associated numerical value indicates the approximate concentration necessary to detect the analyte in the sample.
UJ	This is a combination of the U and J qualifiers. Analyte was analyzed for and was not present above the level of the associated value. The associated value may not accurately or precisely represent the concentration necessary to detect the analyte in the sample.
-	No data validation qualifier assigned.

TABLE F-1A

SOUTH FIELD
SUMMARY OF RI/FS SAMPLE COLLECTION ACTIVITIES
PHASE I FIELD INVESTIGATION
OPERABLE UNIT 2 REMEDIAL INVESTIGATION
FERNALD ENVIRONMENTAL MANAGEMENT PROJECT

Location	Sample No.	Date Collected	Radionuclides	Herbicide Organics	Dioxins/ Furans	Pest/PCB[a]	VOC[b]	SVOC[c]	General Chemistry	Metals	TCLP[d]
GROUNDWATER SAMPLES											
1046	003089	4/13/88	X[e]	-	-[1]	-	-	-	X	X	-
	003370	7/24/88	X	-	-	-	-	-	X	X	-
	003649	10/23/88	X	-	-	-	-	-	X	X	-
	003854	1/22/89	X	-	-	-	-	-	X	X	-
	066829	12/12/89	X	-	-	-	-	-	-	-	-
1065	003860	1/22/89	X	-	-	-	-	-	X	X	-
	003136	4/14/88	X	-	-	-	X	-	X	X	-
	066834	12/13/89	X	-	-	-	-	-	-	-	-
1433	047040	11/16/92	X	-	-	X	X	X	X	X	-
	047044	11/30/92	Gross Alpha/Beta only	-	-	X	X	X	X	X	-
	047048	12/2/92	X	-	-	-	-	-	-	-	-
1516	046938	7/17/90	Total Uranium only	-	-	-	-	-	-	-	-
	046939	7/17/90	-	-	-	-	-	-	nitrate only	-	-
	046940	8/21/90	-	-	-	-	-	-	nitrate only	-	-
	046941	8/21/90	Total Uranium only	-	-	-	-	-	-	-	-
1517	046944 (duplicate of 046945)	7/17/90	Total Uranium only	-	-	-	-	-	-	-	-
	046945	7/17/90	X	-	-	-	X	X	nitrate only	-	-
	046946	8/21/90	Total Uranium only	-	-	-	-	-	-	-	-
	046947	8/21/90	-	-	-	-	-	-	nitrate only	-	-
1518	046963	7/17/90	-	-	-	-	-	-	nitrate only	-	-
	046964	8/21/90	-	-	-	-	-	-	nitrate only	-	-
	046965	8/21/90	Total Uranium only	-	-	-	-	-	-	-	-

See footnotes at end of table

0467
0164

TABLE F-1A
(Continued)

Location	Sample No.	Date Collected	Radionuclides	Herbicide Organics	Dioxins/ Furans	Pest/PCB[a]	VOC[b]	SVOC[c]	General Chemistry	Metals	TCLP[d]
GROUNDWA ER SAMPLES (Continued)											
2014	003064	3/28/88	X	-	-	X	X	X	X	X	-
	003384	7/28/88	X	-	-	-	-	-	X	X	-
	003673	11/6/88	X	-	-	-	-	-	X	X	-
	003869	1/31/89	X	-	-	-	-	-	X	X	-
	004028	1/31/89	-	-	-	X	-	X	-	-	-
	004151	7/26/89	X	-	-	-	-	-	X	X	-
	004211	4/1/90	X	-	-	-	-	-	X	X	-
2046	003997	2/2/89	X	-	-	-	-	-	X	X	-
	004097	5/10/89	X	-	-	-	-	-	X	X	-
	004159	7/28/89	X	-	-	-	-	-	X	X	-
	004219	4/3/90	X	-	-	-	-	-	X	X	-
2048	003994	2/9/89	X	-	-	-	-	-	X	X	-
	004100	5/2/89	X	-	-	-	-	-	X	X	-
2065	003095	4/19/88	X	-	-	X	X	X	X	X	-
	003438	8/4/88	X	-	-	-	-	-	X	X	-
	003693	11/8/88	X	-	-	-	-	-	X	X	-
	003538 (duplicate of 003884)	2/2/89	X	-	-	-	-	-	X	X	-
	003544	2/2/89	-	-	-	X	-	X	-	-	-
	003884	2/2/89	X	-	-	-	-	-	X	X	-
	004163	7/30/89	X	-	-	-	-	-	X	X	-
	004168 (duplicate of 004163)	7/30/89	X	-	-	-	-	-	X	X	-
	004225	4/9/90	X	-	-	-	-	-	X	X	-

See footnotes at end of table

TABLE F-1A
(Continued)

Location	Sample No.	Date Collected	Radionuclides	Herbicide Organics	Dioxins/ Furans	Pest/PCB[a]	VOC[b]	SVOC[c]	General Chemistry	Metals	TCLP[d]
GROUNDWATER SAMPLES (Continued)											
2385	004192	5/6/90	X	-	-	-	-	-	X	X	-
	004303	7/10/90	X	-	-	-	-	-	X	X	-
2401	038375	6/3/92	-	-	-	-	-	-	X	X	-
3014	003084	4/8/88	X	-	-	-	-	-	X	X	-
	003385	7/28/88	X	-	-	-	-	-	X	X	-
	003672	11/6/88	X	-	-	-	-	-	X	X	-
	003870	1/31/89	X	-	-	-	-	-	X	X	-
	004239	4/1/90	X	-	-	-	-	-	X	X	-
3045	004198	5/23/90	X	-	-	-	-	-	X	X	-
3046	004207	6/15/90	X	-	-	-	-	-	X	X	-
	004332	8/24/90	X	-	-	-	-	-	X	X	-
3065	003995	1/25/89	X	-	-	-	-	-	X	X	-
	004098	5/31/89	X	-	-	-	-	-	X	X	-
	004249	4/9/90	X	-	-	-	-	-	X	X	-
3385	004309	7/24/90	X	-	-	-	-	-	X	X	-
	004363	1/10/91	X	-	-	-	-	-	X	X	-
4014	003871	1/31/89	X	-	-	-	-	-	X	X	-
	004089	5/1/89	X	-	-	-	-	-	X	X	-
	066866	12/13/89	X	-	-	-	-	-	-	-	-
4016	003996	1/20/89	X	-	-	-	-	-	X	X	-

See footnotes at end of table

TABLE F-1A
(Continued)

Location	Sample No.	Sample Interval (ft)[g]	Radionuclides	Herbicide Organics	Dioxins/ Furans	Pest/PCB[a]	VOC[b]	SVOC[c]	General Chemistry	Metals	TCLP[d]
SURFACE SAMPLES											
Zone 3	005001	0.0-2.0	X	-	-	-	-	-	-	-	-
SUBSURFACE SAMPLES											
1014	007354	1.5-3.0	X	-	-	-	-	-	-	-	-
1046	008014	0.0-1.5	X		-	-	-	-	-	-	-
	008024	15.0-16.5	X		-	-	-	-	-	-	-
	008025	15.0-16.5	X		-	-	-	-	-	-	-
1407	098000	0.0-0.5	Total Uranium only	-	-	-	-	-	-	-	-
	098001	0.5-1.0		-	-	-	-	-	-	-	-
	098002	1.5-2.0		-	-	-	-	-	-	-	-
	098003	3.0-3.5		-	-	-	-	-	-	-	-
	098004	4.5-5.0		-	-	-	-	-	-	-	-
	098006	6.0-6.5		-	-	-	-	-	-	-	-
	098008	7.5-8.0		-	-	-	-	-	-	-	-
	098009	8.0-8.5		-	-	-	-	-	-	-	-
1433	047019	2.0-5.0	X	-	-	-	-	-	-	-	-
1455	055900	0.0-3.0	X	-	-	-	-	-	-	-	-
	055901	0.0-3.75	X	-	-	-	-	-	-	-	-
1456	055902	0.0-3.75	X	-	-	-	-	-	-	-	-
	055903	0.0-4.25	X	-	-	-	-	-	-	-	-
	055906	3.75	-	-	-	X	X	X	-	X	-
1457	055904	0.0-3.75	X	-	-	-	-	-	-	-	-
	055905	0.0-4.25	X	-	-	-	-	-	-	-	-
1458	055913	0.0-4.0	X	-	-	-	-	-	-	-	-
	055914	0.0-4.5	X	-	-	-	-	-	-	-	-

See footnotes at end of table

TABLE F-1A
(Continued)

Location	Sample No.	Sample Interval (ft)[g]	Radionuclides	Herbicide Organics	Dioxins/ Furans	Pest/PCB[a]	VOC[b]	SVOC[c]	General Chemistry	Metals	TCLP[d]
SUBSURFACE SAMPLES (Continued)											
1459	055915	0.0-5.0	X	-	-	-	-	-	-	-	-
	055916	0.0-6.0	X	-	-	-	-	-	-	-	-
	055919	5.0	-	-	-	X	X	X	-	X	-
1460	055917	0.0-3.5	X	-	-	-	-	-	-	-	-
	055918	0.0-4.25	X	-	-	-	-	-	-	-	-
1461	055926	0.0-4.0	X	-	-	-	-	-	-	-	-
	055927	0.0-5.0	X	-	-	-	-	-	-	-	-
1462	055928	0.0-4.0	X	-	-	-	-	-	-	-	-
	055929	0.0-5.0	X	-	-	-	-	-	-	-	-
	055932	4.0	-	-	-	X	X	X	-	X	-
1463	055930	0.0-3.5	X	-	-	-	-	-	-	-	-
	055931	0.0-4.5	X	-	-	-	-	-	-	-	-
1464	055939	0.0-3.75	X	-	-	-	-	-	-	-	-
	055940	0.0-4.5	X	-	-	-	-	-	-	-	-
1465	055941	0.0-3.5	X	-	-	-	-	-	-	-	-
	055942	0.0-4.5	X	-	-	-	-	-	-	-	-
	055945	3.5	-	-	-	X	X	X	-	X	-
1466	055943	0.0-3.0	X	-	-	-	-	-	-	-	-
	055944	0.0-4.5	X	-	-	-	-	-	-	-	-
1467	055952	0.0-2.5	X	-	-	-	-	-	-	-	-
	055953	0.0-3.5	X	-	-	-	-	-	-	-	-
1468	055954	0.0-2.5	X	-	-	-	-	-	-	-	-
	055955	0.0-3.5	X	-	-	-	-	-	-	-	-
	055959	2.5	-	-	-	X	X	X	-	X	-

See footnotes at end of table

TABLE F-1A
(Continued)

Location	Sample No.	Sample Interval (ft)[g]	Radionuclides	Herbicide Organics	Dioxins/ Furans	Pest/PCB[a]	VOC[b]	SVOC[c]	General Chemistry	Metals	TCLP[d]
SUBSURFACE SAMPLES (Continued)											
1469	055956	0.0-2.5	X	-	-	-	-	-	-	-	-
	055957	0.0-3.5	X	-	-	-	-	-	-	-	-
1470	055966	0.0-3.0	X	-	-	-	-	-	-	-	-
	055967	0.0-4.0	X	-	-	-	-	-	-	-	-
1471	055968	0.0-4.0	X	-	-	-	-	-	-	-	-
	055969	0.0-5.5	X	-	-	-	-	-	-	-	-
	055972	4.0	-	-	-	X	X	X	-	X	-
1472	055970	0.0-4.0	X	-	-	-	-	-	-	-	-
	055971	0.0-5.0	X	-	-	-	-	-	-	-	-
1473	055979	0.0-3.5	X	-	-	-	-	-	-	-	-
	055980	0.0-5.0	X	-	-	-	-	-	-	-	-
	055981	0.0-10.0	X	-	-	-	-	-	-	-	-
	055982	0.0-3.5	X	-	-	-	-	-	-	-	-
1474	055983	0.0-5.0	X	-	-	-	-	-	-	-	-
	055984	0.0-10.0	X	-	-	-	-	-	-	-	-
	055988	0.0-10.0	-	-	-	X	X	X	-	X	-
1475	055985	0.0-3.75	X	-	-	-	-	-	-	-	-
	055986	0.0-5.0	X	-	-	-	-	-	-	-	-
	055987	0.0-10.0	X	-	-	-	-	-	-	-	-
1516	055371	0.0-0.5	X	-	-	-	-	-	-	-	-
	055373	1.0-1.5	X	-	-	-	-	-	-	-	-
	055375	2.0-2.5	X	-	-	-	-	-	-	-	-
	055377	3.0-3.5	X	-	-	-	-	-	-	-	-
	055379	4.0-4.5	X	-	-	-	-	-	-	-	-
	055383	6.0-6.5	X	-	-	-	-	-	-	-	-

See footnotes at end of table

TABLE F-1A
(Continued)

Location	Sample No.	Sample Interval (ft)[g]	Radionuclides	Herbicide Organics	Dioxins/ Furans	Pest/PCB[a]	VOC[b]	SVOC[c]	General Chemistry	Metals	TCLP[d]
SUBSURFACE SAMPLES (Continued)											
1516 (Continued)	055387	8.0-8.5	X	-	-	-	-	-	-	-	-
	055389	9.0-9.5	X	-	-	-	-	-	-	-	-
	055391	10.0-10.5	X	-	-	-	-	-	-	-	-
	055393	11.0-11.5	X	-	-	-	-	-	-	-	-
	055395	12.0-12.5	X	-	-	-	-	-	-	-	-
	055399	14.0-14.5	X	-	-	-	-	-	-	-	-
	055401	15.0-15.5	X	-	-	-	-	-	-	-	-
	055405	17.0-17.5	X	-	-	-	-	-	-	-	-
	055407	18.0-18.5	X	-	-	-	-	-	-	-	-
	055409	19.0-19.5	X	-	-	-	-	-	-	-	-
	055411	NA[h]	-	-	-	-	-	-	-	-	X
1517	055413	0.0-0.5	X	-	-	-	-	-	-	-	-
	055416	1.5-2.0	X	-	-	-	-	-	-	-	-
	055419	3.0-3.5	X	-	-	-	-	-	-	-	-
	055422	4.5-5.0	X	-	-	-	-	-	-	-	-
	055425	6.0-6.5	X	-	-	-	-	-	-	-	-
	055427	7.0-7.5	X	-	-	-	-	-	-	-	-
	055429	8.0-8.5	X	-	-	-	-	-	-	-	-
	055431	9.0-9.5	X	-	-	-	-	-	-	-	-
	055433	10.0-10.5	X	-	-	-	-	-	-	-	-
	055437	12.0-12.5	X	-	-	-	-	-	-	-	-
	055440	13.5-14.0	X	-	-	-	-	-	-	-	-
	055443	15.0-15.5	X	-	-	-	-	-	-	-	-
	055446	16.5-17.0	X	-	-	-	-	-	-	-	-

See footnotes at end of table

TABLE F-1A
(Continued)

Location	Sample No.	Sample Interval (ft)[g]	Radionuclides	Herbicide Organics	Dioxins/ Furans	Pest/PCB[a]	VOC[b]	SVOC[c]	General Chemistry	Metals	TCLP[d]
SUBSURFACE SAMPLES (Continued)											
1517 (Continued)	055449	18.0-18.5	X	-	-	-	-	-	-	-	-
	055451	19.0-19.5	X	-	-	-	-	-	-	-	-
1518	055454	0.0-0.5	X	-	-	-	-	-	-	-	-
	055456	1.0-1.5	X	-	-	-	-	-	-	-	-
	055458	2.0-2.5	X	-	-	-	-	-	-	-	-
	055460	3.0-3.5	X	-	-	-	-	-	-	-	-
	055462	4.0-4.5	X	-	-	-	-	-	-	-	-
	055464	5.0-5.5	X	-	-	-	-	-	-	-	-
	055466	6.0-6.5	X	-	-	-	-	-	-	-	-
	055468	7.0-7.5	X	-	-	-	-	-	-	-	-
	055470	8.0-8.5	X	-	-	-	-	-	-	-	-
	055472	9.0-9.5	X	-	-	-	-	-	-	-	-
	055474	10.0-10.5	X	-	-	-	-	-	-	-	-
	055476	11.0-11.5	X	-	-	-	-	-	-	-	-
	055478	12.0-12.5	X	-	-	-	-	-	-	-	-
	055481	13.5-14.0	X	-	-	-	-	-	-	-	-
	055483	14.5-15.0	X	-	-	-	-	-	-	-	-
	055485	15.5-16.0	X	-	-	-	-	-	-	-	-
	055487	16.5-17.0	X	-	-	-	-	-	-	-	-
	055489	17.5-18.0	X	-	-	-	-	-	-	-	-
	055491	18.5-19.0	X	-	-	-	-	-	-	-	-
	055493	19.5-20.0	X	-	-	-	-	-	-	-	-
1712	061319	1.5-2.0	-	-	-	-	-	-	-	-	X

See footnotes at end of table

TABLE F-1A
(Continued)

Location	Sample No.	Sample Interval (ft)[g]	Radionuclides	Herbicide Organics	Dioxins/ Furans	Pest/PCB[a]	VOC[b]	SVOC[c]	General Chemistry	Metals	TCLP[d]
SUBSURFACE SAMPLES (Continued)											
1713	061324	1.5-2.0	-	-	-	-	-	-	-	-	X
1714	061329	1.5-2.0	-	-	-	-	-	-	-	-	X
1715	061334	1.5-2.0	-	-	-	-	-	-	-	-	X
1792	067343	1.5-3.0	-	-	X	X	X	X	-	X	-
	067346	6.0-7.5	-	-	X	X	X	X	-	X	-
	067350	12.0-13.5	-	-	X	X	X	X	-	X	-
	067353	16.5-18.0	-	-	X	X	X	X	-	X	-
	067356	21.5-23.0	-	-	X	X	X	X	-	X	-
	067362	28.0-29.5	-	-	-	-	-	-	-	-	X
1793	067333	3.0-4.5	-	-	X	X	X	X	-	X	-
	067335	6.0-7.5	-	-	-	-	-	-	-	-	X
1794	067324	0.0-1.0	-	-	X	X	X	X	-	X	-
	067326	1.5-2.0	-	-	-	-	-	-	-	-	X
	067328	2.0-2.5	-	-	X	X	X	X	-	X	-
1795	067367	0.0-1.0	-		-	X	X	X	-	X	X
	067369	2.0-3.0	-	-	-	-	-	-	-	-	organics only
	067370	3.0-4.0	-	-	X	X	X	X	-	X	-
1882	067802	1.5-2.0	-	-	-	-	-	-	-	-	organics only
1883	067801	1.5-2.0	-	-	-	-	-	-	-	-	organics only

See footnotes at end of table

TABLE F-1A
(Continued)

Location	Sample No.	Sample Interval (ft)[g]	Radionuclides	Herbicide Organics	Dioxins/ Furans	Pest/PCB[a]	VOC[b]	SVOC[c]	General Chemistry	Metals	TCLP[d]
SUBSURFACE SAMPLES (Continued)											
1884	067804	1.5-2.0	-	-	-	-	-	-	-	-	organics only
1885	067803	1.5	-	-	-	-			-	-	organics only
2046	008950	30.0-31.5	X	-	-	-	-	-	-	-	-
	008956	61.0-62.5	Total Uranium only	-	-	-	-	-	-	-	-
2065	007184	13.5-15.0	X	-	-	-	-	-	-	-	-
	007191	35.0-36.5	X	-	-	-	-	-	-	-	-
2385	032622	4.5-6.0	X	-	-	-	-	-	-	-	-
	032639	45.0-46.5	X	-	-	-	-	-	-	-	-
3046	032709	100.0-101.5	X	-	-	-	-	-	-	-	-
3385	032725	80.0-81.5	X	-	-	-	-	-	-	-	-
4014	010393	65.0-66.5	X	-	-	-	-	-	-	-	-
	010408	140.0-141.5	X	-	-	-	-	-	-	-	-
SPA-0	039170	NA	X								
SPA-10	039171	0.0-10.0	X	-	-	-	-	-	-	-	-

[a]Pest/PCB = Pesticide/Polychlorinated Biphenyl
[b]VOC = Volatile Organic Compound
[c]SVOC = Semivolatile Organic Compound
[d]TCLP = Toxicity Characterstic Leaching Procedure
[e]X = Sample analyzed for parameter indicated.
[f]Sample not analyzed for this parameter
[g]The sample interval is depth, in feet, below the ground surface.
[h]NA = Not available

TABLE F-1B

SOUTH FIELD
SUMMARY OF RI/FS SAMPLE COLLECTION ACTIVITIES
PHASE II FIELD INVESTIGATION
OPERABLE UNIT 2 REMEDIAL INVESTIGAITON
FERNALD ENVIRONMENTAL MANAGEMENT PROJECT

Monitoring Well, Hydropunch™, or Sample Location	Sample Numbers	Target Analyte List 20.03.05	
		Total Uranium Screening A	Full HSL, Gen. GW Qual., Full Rad. B
SURFACE WATER SAMPLES			
SF-SW-01	110422		X
	110424	X	
SF-SW-02	110432		X
	110434	X	
SF-SW-03		X	X
SF-SW-04		X	X
SF-SW-05[b]	113489	X	
SF-SW-06[b]	113490	X	
SF-SW-07[b]	113666	X	
11018[b]	112633	X	
GROUNDWATER			
1014		X	X
1046	116231		X[f]
	116235	X	
	113312		X[m], TOC
1065	112013		X
	112014[b]		X[d]
	113292	X	
	113293[b]	X	
1433		X	X
1516		X	X
1517		X	X
1518		X	X
1941	112997		X
	112999	X	
	113316[b]		X[h]
1942	110645	X	
	113000		X
	113001[b]	X	

See footnotes at end of table.

TABLE F-1B
(Continued)

Monitoring Well, Hydropunch™, or Sample Location	Sample Numbers	Target Analyte List 20.03.05	
		Total Uranium Screening A	Full HSL; Gen. GW Qual., Full Rad. B
GROUNDWATER (Continued)			
1942 (continued)	113319[b]		X[h]
1954	113798		X
	113800	X	
2014	111992		X
	111994	X	
2046	116233		X
	116234	X	
2065	112008		X
	112009	X	
	112012	X	
	113291[b]		X[d]
2385	111998		X
	111999	X	
2401	116229		X
	116230	X	
2943	113003		X
	113005	X	
	113314[b]		X[h]
	113315[b] (duplicate of 113314)		X[h]
2944	113866		X
	113866F[b]		X[h]
	113868	X	
2945	112994		X
	112996	X	
	113313[b]		X[h]
2954[b]	113224	X	
	113795		X
	113797	X	
11009	110597 (9.0 -14.0)	X	
11010	110526 (9.0 - 13.0)	X	
11011		X	
11012	110714 (10.0 - 14.0)	X	

See footnotes at end of table.

TABLE F-1B
(Continued)

Monitoring Well, Hydropunch™, or Sample Location	Sample Numbers	Target Analyte List 20.03.05	
		Total Uranium Screening A	Full HSL, Gen. GW Qual., Full Rad. B
GROUNDWATER (Continued)			
11013	112809 (5.5 - 9.5)	X	
11014	110487 (5.0 - 9.0)	X	
11015	110465 (8.0)	X	
11016	112829 (5.5 - 9.5)	X	
11017		X	
11018	112634 (21.0 - 24.0)	X	
11019[b]	113050 (21.0 - 25.0)	X	
11020[b]	113046 (19.0 - 23.0)	X	
11021[b]	113054 (21.0 - 25.0)	X	
11022[b]	113058 (21.0 - 25.0)	X	
11023[b]	113062 (21.0 - 25.0)	X	
11024[b]	113067 (6.5 - 10.5)	X	
11025[b]	113071 (6.5 - 10.5)	X	
11026[b]	113145 (10.0 - 14.5)	X	
11027[b]	113104 (12.0 - 16.0)	X	
11028[b]	113242 (55.0)	X	
11029[b]	113007 (40.0 - 42.0)	X	
11030[b]	116361, 116362 (62.0 - 67.0)	X	
11032[b]	113817	X	
	113869		X
	113869F		X[h]
	113870	X	
11082[b]	113693 (9.0 - 13.0)	X	
11083[b]	113679 (9.0 - 13.0)	X	
11084[b]	113288 (10.5 - 14.5)	X	
11085[b]	113792		X

See footnotes at end of table.

0479

5174

TABLE F-1B
(Continued)

Sample Location	Sample Number	Sample Interval (ft.)	Target Analyte List 20.03.05					
			Screening	Chem/Rad	RCRA/Geotechnical			
			A	C	D	E	F	J
SEDIMENT SAMPLES								
SF-SD-01	110425	0 - 0.5		X				
	110429[b]		X					
SF-SD-02	110430	0 - 0.5		X				X
	110435[b]		X					
	112992				SA, HA			
	112993				TOC			
SF-SD-03	110428	0 - 0.5		X				
	110436[b]		X					
SF-SD-04		0 - 0.5		X				
SURFACE SAMPLES								
SF-SB-01 (1964)	110331	0 - 0.5		X				
SF-SB-02 (1965)	110351	0 - 0.5		X				
SF-SB-03 (1966)	110355	0 - 0.5		X				
SF-SB-04 (1967)	110358	0 - 0.5		X				
SF-SB-05 (1968)	110392	0 - 0.5		X				
SF-SB-06 (1969)	110338	0 - 0.5		X				
SF-SB-07 (1970)	110372	0 - 0.5		X				
SF-SB-08 (1971)	110324	0 - 0.5		X				
SF-SB-09 (1972)	110378	0 - 0.5		X				
SF-SS-10 (11186)	110317	0 - 0.5		X				
SF-SS-11 (11187)	110321	0 - 0.5		X				
SF-SB-12 (1975)	110385	0 - 0.5		X				
SF-SB-13 (11188)	110340	0 - 0.5		X				
SF-SB-14 (1977)	110304	0 - 0.5		X				
SF-SB-15 (1978)	110335	0 - 0.5		X				
SF-SS-16	110343	0 - 0.5		X				
SF-SS-17	110297	0 - 0.5		X				
SF-SS-18	110287	0 - 0.5		X				
SF-SS-19	110365	0 - 0.5		X				
SF-SS-20	110290	0 - 0.5		X				
SF-SS-21	110307	0 - 0.5		X				

See footnotes at end of table.

0480

TABLE F-1B
(Continued)

Sample Location	Sample Number	Sample Interval (ft.)	Target Analyte List 20.03.05					
			Screening	Chem/Rad	RCRA/Geotechnical			
			A	C	D	E	F	J
SURFACE WIPE SAMPLES (TRENCH DEBRIS)								
Trench 1	113726	2.0	X[o]					
	113727	2.0	X[o]					
	113728	10.7	X[o]					
	113729	6.8	X[o]					
	113730	5.8	X[o]					
Trench 2	113731	4.0	X[o]					
	113732	7.0	X[o]					
	113733	7.0	X[o]					
Trench 4	113734	3.0	X[o]					
	113735	4.0	X[o]					
	113736	4.0	X[o]					
	113737	5.0	X[o]					
	113738	5.0	X[o]					
	113739	3.5	X[o]					
	113740	5.0	X[o]					
	114065	6.0	X[o]					
CONCRETE CORE SAMPLES (TRENCH DEBRIS)								
Trench 1	93-461-7853	NA	X[i]					
	93-461-7854	NA	X[i]					
Trench 2	93-461-7852	NA	X[i]					
SUBSURFACE SAMPLES								
Trench 1	113105	2.0		X[e]				
	113716		X					
	113718			X[c]				
Trench 2	113724	6.0	X	X[i]				
	113725		X	X[i]				
Trench 3	None Collected							
Trench 4	113720	3.5	X					
	113722			X[e]				
Trench 5	113807	6.0	X[i]					

See footnotes at end of table.

TABLE F-1B
(Continued)

Sample Location	Sample Number	Sample Interval (ft.)	Target Analyte List 20.03.05					
			Screening	Chem/Rad	RCRA/Geotechnical			
			A	C	D	E	F	J
SUBSURFACE SAMPLES (Continued)								
Trench 6	None Collected							
Trench 7	None Collected							
Trench 8	None Collected							
Trench 9	None Collected							
Trench 10	None Collected							
SF-SB-03 (1966)[b]	110405	0.5 - 1.0		X				
SF-SB-04 (1967)	110362	0.5 - 1.0		X				
SF-SB-05 (1968)[a]	110396	0.5 - 1.0		X				
SF-SB-06 (1969)	110339	0.5 - 1.0		X				
SF-SB-07 (1970)		0.5 - 1.0		X				
SF-SB-08 (1971)	110327	0.5 - 1.0		X				
SF-SB-09 (1972)	110382	0.5 - 1.0		X	SA, HA, W			X
SF-SS-10 (11186)[b]	110413	0.5 - 1.0		X				
SF-SS-11 (11187)[b]	110415	0.5 - 1.0		X				
SF-SB-12 (1975)	110389	0.5 - 1.0		X				
SF-SB-14 (1977)		0.5 - 1.0		X				
SF-SB-15 (1978)[c]	110406	0.5 - 1.0		X				
SF-SS-19	110369	0.5 - 1.0		X				
SF-SS-20		0.5 - 1.0		X				
1941	112784	13.0 - 13.5	X					
1942	110644	17.5 - 18.0	X					
1964	112647	3.0 - 5.0			X[g]			
	112648	5.0 - 6.5		X				
	112671	20.0 - 22.0			X[g]			
	112685	29.0 - 30.5		X				
	112686[b]	30.5 - 31.0	X					

See footnotes at end of table.

0482

5174

TABLE F-1B
(Continued)

Sample Location	Sample Number	Sample Interval (ft.)	Target Analyte List 20.03.05					
			Screening	Chem/Rad	RCRA/Geotechnical			
			A	C	D	E	F	J
SUBSURFACE SAMPLES (Continued)								
1965	112735	0.0 - 2.0			X[g]			
	112736	2.0 - 4.0						X
	112737	4.0 - 6.0		X				
	112761	22.5 - 24.5			X[g]			
	112762	24.5 - 26.5				X		X
	112764[b]	28.0 - 28.5	X					
	112763[b]	26.5 - 28.0		X				
		35.0 - 35.5		X				
1966	112858	2.5 - 4.5			X[g]			
	112886				TOC			
	112859	4.5 - 6.5		X	X			
	112860	6.5 - 8.5						X
	112867[a]	11.5 - 13.0			X[g]			
	112887[a]				TOC			
	112868[a]	13.0 - 15.0						X
	112883[b]	24.0 - 25.0		X				
	112884[b]	25.0 - 25.5	X[b]					
		45.0 - 45.5		X				
1967	112696	4.5 - 7.5		X				
	112731	29.5 - 31.0		X				
	112732[b]	31.0 - 31.5	X					
1968	112833	1.0 - 3.0						X
	112834	3.0 - 4.5			PL, LL			
	112835	4.5 - 6.5		X				
	112849[a]	15.5 - 16.5		X				
	112852[b]	17.5 - 18.0	X					
1969	112557	2.0 - 4.0			X[g]			
	112559	4.5 - 6.0		X				
	112562	7.0 - 9.0			X[g]			
	112563	9.0 - 10.5		X				
	112564[a]	10.5 - 12.0			X[g]			
	112565	12.0 - 13.5						X
	112566[b]	13.5 - 14.0	X					

See footnotes at end of table.

0483

TABLE F-1B
(Continued)

Sample Location	Sample Number	Sample Interval (ft.)	Target Analyte List 20.03.05					
			Screening	Chem/Rad	RCRA/Geotechnical			
			A	C	D	E	F	J
SUBSURFACE SAMPLES (Continued)								
1970	112688	0.0 - 2.0						X
	112689	2.0 - 4.0				X		
	112690	4.0 - 5.5		X				
	112691	5.5 - 7.0			X			
	112892	7.0 - 9.0					X	X
	112893	9.0 - 10.5		X				
	112894[b]	10.5 - 11.0	X					
1971	112536	4.5 - 6.5		X				
	112593	9.5 - 11.0		X				
	112594[b]	11.0 -11.5	X					
1972	110584	2.5 - 4.0		X				
	112494	7.5 - 9.0		X				
	112497[b]	10.0 - 10.5	X					
1975	112544	2.0 - 4.0			X[g]			
	112545	4.0 - 5.0		X				
	112546	5.0 - 7.0						X
	112550	8.5 - 10.5		X				
	112551[b]	10.0 - 10.5	X					
1977	110568	3.0 - 5.0				X		X
	110569	5.0 - 8.0			X[g]			
	110571[a]	8.5 - 10.0		X				
	110575	11.5 - 13.5			X[g]			
	110578[a]	14.5 - 16.5					X	X
	110579[a]	16.5 - 18.5		X				
	110580[b]	18.0 - 18.5	X					
1978	112584	9.5 - 11.0		X				
	112588[a]	13.5 - 15.0		X				
	112589[b]	15.0 - 15.5	X					
2943	110767	50.0 - 65.0	X					
2944	113769	50.0 - 65.0	X					
2945	110239	3.0 - 4.5			SA,HA			X
	110240[b]	4.5 - 6.0			SA,HA			
	110244	5.0 - 7.0	X		W, SG			

See footnotes at end of table.

TABLE F-1B
(Continued)

Sample Location	Sample Number	Sample Interval (ft.)	Target Analyte List 20.03.05					
			Screening	Chem/Rad	RCRA/Geotechnical			
			A	C	D	E	F	J
SUBSURFACE SAMPLES (Continued)								
2945 (Continued)	110241	6.0 - 7.5			SA,HA			
	110253	25.0 - 27.0	X		X[g]			
2954[b]	113223	45.0-60.0	X					
11009[b]	110530	3.5 - 4.0	X					
	110596	15.5 - 16.0	X					
11010[b]	110511	0.0 - 0.5	X					
	110525	13.5 - 14.0	X					
11011[b]	110607	10.5 - 11.0	X					
	110618	18.0 - 18.5	X					
11012[b]	110687	0.0 - 0.5	X					
	110712	13.5 -14.0	X					
	110713	14.0 - 14.5	X					
11013[b]	112811	9.5 - 10.0	X					
11014[b]	110470	1.0 - 1.5	X					
	110486	10.0 - 10.5	X					
11015[b]	110437	0.5 - 1.0	X					
	110464	14.5 - 15.0	X					
11016[b]	112832	10.0 - 10.5	X					
11017[b]	110488	0.0 - 0.5	X					
11017[b]	110510	16.5 - 17.0	X					
11018[b]	112636	24.5 - 25.0	X					
11027[b]	113102	16.5 - 18.0	X					
11186 (1973)	112507	4.5 - 6.5		X				
	112514	9.5 - 11.5		X				
11186 (1973)	112516[b]	12.0 - 12.5	X					
11187 (1974)	112518	0.0 - 2.0						X
	112519	2.0 - 4.0			X[g]			
	112520	4.0 - 6.0		X				
	112526	9.0 - 10.5		X				
11187 (1974)	112527[b]	10.5 - 11.0	X					
11188 (1976)	110547	5.0 - 6.0		X				
	110556	10.0 - 10.5		X				
	110559[b]	11.5 - 12.0	X					

See footnotes at end of table.

0485

TABLE F-1B
(Continued)

TARGET ANALYTE LIST DETAILS:

[A] Water/Soil - Total Uranium

[B] Water - Full Hazardous Substance List (HSL), Full Rad., General Groundwater Quality Parameters

[C] Soil/Sediment/Sludge/Waste - Full HSL, Full Rad.

[D] Classification Tests
SG=Specific Gravity
W=Water Content
LL=Liquid Limit
PL=Plastic Limit
Grain Size
SA=Sieve Analysis
HA=Hydrometer Analysis
Other
TOC=Total Organic Carbon

[E] CON=Consolidation Test

[F] HC=Hydraulic Conductivity

[J] Dry Unit Weight

NOTE: X = Sample analyzed for parameter(s) indicated, except when shaded.
NA = Not applicable

The shaded areas represent samples or analyses that were specified in the Sampling and Analysis Plan (SAP) but were not collected or performed. These differences may be due to field conditions (e.g., dry well) or laboratory variances (e.g., missed holding time).

[a]Substitute samples for samples specified in the SAP
[b]Additional samples not specified in the SAP
[c]TAL B or C without Rad.
[d]TAL B or C with Full Rad., Metals, and cyanide
[e]TAL B or C with Full Rad. only
[f]TAL B or C without volatile organic compounds (VOCs)
[g]TAL B or D without total organic carbon (TOC)
[h]Unfiltered metals and Full Rad. only
[i]Total uranium, thorium, and radium
[j]VOCs, semivolatile organic compounds (SVOCs), polychlorinated biphenyls (PCBs), and pesticides only
[k]SVOCs, PCBs, and pesticides only
[l]VOCs, Rad., metals, and cyanide only
[m]VOCs only
[n]Metals only
[o]Total uranium, total thorium, isotopic uranium, and isotopic thorium
[p]PCBs and pesticides only

0486

TABLE F-2A

SOUTH FIELD
CONCENTRATIONS OF DETECTED ANALYTES
ABOVE BACKGROUND IN SURFACE SOIL
PHASE II FIELD INVESTIGATION
OPERABLE UNIT 2 REMEDIAL INVESTIGATION
FERNALD ENVIRONMENTAL MANAGEMENT PROJECT

SAMPLE LOCATION	SAMPLE ID	SAMPLE INTERVALS	SAMPLE DATE	PARAMETER	RESULTS	VAL QUAL	BACKGROUND	UNITS
METALS								
1964	110331	0 - .5	22-MAR-93	Beryllium	.860	-	.6	mg/kg
1964	110331	0 - .5	22-MAR-93	Calcium	41500.000	-	5296.781	mg/kg
1964	110331	0 - .5	22-MAR-93	Copper	16.900	-	15.7	mg/kg
1964	110331	0 - .5	22-MAR-93	Molybdenum	5.500	-	0	mg/kg
1964	110331	0 - .5	22-MAR-93	Silver	5.300	-	0	mg/kg
1964	110331	0 - .5	22-MAR-93	Sodium	91.300	-	55.145	mg/kg
1964	110331	0 - .5	22-MAR-93	Potassium	1940.000	-	1349.53	mg/kg
1964	110331	0 - .5	22-MAR-93	Magnesium	13700.000	J	1460	mg/kg
1965	110351	0 - .5	22-MAR-93	Beryllium	.980	-	.6	mg/kg
1965	110351	0 - .5	22-MAR-93	Calcium	33900.000	-	5296.781	mg/kg
1965	110351	0 - .5	22-MAR-93	Zinc	62.900	-	58.5	mg/kg
1965	110351	0 - .5	22-MAR-93	Sodium	90.200	-	55.145	mg/kg
1965	110351	0 - .5	22-MAR-93	Silver	6.500	-	0	mg/kg
1965	110351	0 - .5	22-MAR-93	Potassium	2170.000	-	1349.53	mg/kg
1965	110351	0 - .5	22-MAR-93	Molybdenum	5.500	-	0	mg/kg
1965	110351	0 - .5	22-MAR-93	Magnesium	12800.000	J	1460	mg/kg
1965	110351	0 - .5	22-MAR-93	Copper	19.600	-	15.7	mg/kg
1966	110355	0 - .5	22-MAR-93	Barium	125.000	-	88.5	mg/kg
1966	110355	0 - .5	22-MAR-93	Beryllium	.910	-	.6	mg/kg
1966	110355	0 - .5	22-MAR-93	Calcium	32900.000	-	5296.781	mg/kg
1966	110355	0 - .5	22-MAR-93	Sodium	79.000	-	55.145	mg/kg
1966	110355	0 - .5	22-MAR-93	Silver	5.700	-	0	mg/kg
1966	110355	0 - .5	22-MAR-93	Potassium	1530.000	-	1349.53	mg/kg
1966	110355	0 - .5	22-MAR-93	Molybdenum	5.500	-	0	mg/kg
1966	110355	0 - .5	22-MAR-93	Magnesium	11900.000	J	1460	mg/kg
1966	110355	0 - .5	22-MAR-93	Copper	18.300	-	15.7	mg/kg
1967	110358	0 - .5	22-MAR-93	Beryllium	.710	-	.6	mg/kg
1967	110358	0 - .5	22-MAR-93	Magnesium	17900.000	J	1460	mg/kg
1967	110358	0 - .5	22-MAR-93	Calcium	58400.000	-	5296.781	mg/kg
1967	110358	0 - .5	22-MAR-93	Molybdenum	6.200	-	0	mg/kg
1967	110358	0 - .5	22-MAR-93	Potassium	1480.000	-	1349.53	mg/kg
1967	110358	0 - .5	22-MAR-93	Sodium	97.200	-	55.145	mg/kg
1967	110358	0 - .5	22-MAR-93	Silver	5.500	-	0	mg/kg
1968	110392	0 - .5	22-MAR-93	Calcium	71300.000	-	5296.781	mg/kg
1968	110392	0 - .5	22-MAR-93	Molybdenum	4.300	-	0	mg/kg

0487

TABLE F-2A
(Continued)

SAMPLE LOCATION	SAMPLE ID	SAMPLE INTERVALS	SAMPLE DATE	PARAMETER	RESULTS	VAL QUAL	BACKGROUND	UNITS
METALS (Continued)								
1968	110392	0 - .5	22-MAR-93	Magnesium	31600.000	J	1460	mg/kg
1968	110392	0 - .5	22-MAR-93	Sodium	121.000	-	55.145	mg/kg
1968	110392	0 - .5	22-MAR-93	Silver	4.500	-	0	mg/kg
1968	110392	0 - .5	22-MAR-93	Potassium	1400.000	-	1349.53	mg/kg
1969	110338	0 - .5	22-MAR-93	Aluminum	14900.000	-	13125.282	mg/kg
1969	110338	0 - .5	22-MAR-93	Barium	98.700	-	88.5	mg/kg
1969	110338	0 - .5	22-MAR-93	Calcium	60900.000	-	5296.781	mg/kg
1969	110338	0 - .5	22-MAR-93	Beryllium	1.500	-	.6	mg/kg
1969	110338	0 - .5	22-MAR-93	Sodium	177.000	-	55.145	mg/kg
1969	110338	0 - .5	22-MAR-93	Silver	5.800	-	0	mg/kg
1969	110338	0 - .5	22-MAR-93	Potassium	1550.000	-	1349.53	mg/kg
1969	110338	0 - .5	22-MAR-93	Molybdenum	5.600	-	0	mg/kg
1969	110338	0 - .5	22-MAR-93	Magnesium	17600.000	J	1460	mg/kg
1969	110338	0 - .5	22-MAR-93	Copper	16.100	-	15.7	mg/kg
1970	110372	0 - .5	22-MAR-92	Antimony	1.900	J	0	mg/kg
1970	110372	0 - .5	22-MAR-92	Beryllium	.680	-	.6	mg/kg
1970	110372	0 - .5	22-MAR-92	Calcium	40400.000	-	5296.781	mg/kg
1970	110372	0 - .5	22-MAR-92	Lead	30.000	J	29.575	mg/kg
1970	110372	0 - .5	22-MAR-92	Molybdenum	5.200	-	0	mg/kg
1970	110372	0 - .5	22-MAR-92	Zinc	62.100	-	58.5	mg/kg
1970	110372	0 - .5	22-MAR-92	Sodium	78.800	-	55.145	mg/kg
1970	110372	0 - .5	22-MAR-92	Silver	6.100	-	0	mg/kg
1970	110372	0 - .5	22-MAR-92	Potassium	1730.000	-	1349.53	mg/kg
1970	110372	0 - .5	22-MAR-92	Magnesium	13000.000	J	.1460	mg/kg
1970	110372	0 - .5	22-MAR-92	Copper	18.900	-	15.7	mg/kg
1971	110324	0 - .5	22-MAR-93	Beryllium	.750	-	.6	mg/kg
1971	110324	0 - .5	22-MAR-93	Sodium	90.000	-	55.145	mg/kg
1971	110324	0 - .5	22-MAR-93	Silver	6.000	-	0	mg/kg
1971	110324	0 - .5	22-MAR-93	Calcium	29700.000	-	5296.781	mg/kg
1971	110324	0 - .5	22-MAR-93	Molybdenum	5.600	-	0	mg/kg
1971	110324	0 - .5	22-MAR-93	Magnesium	9340.000	J	1460	mg/kg
1971	110324	0 - .5	22-MAR-93	Copper	18.600	-	15.7	mg/kg
1972	110378	0 - .5	19-MAR-93	Calcium	64800.000	-	5296.781	mg/kg
1972	110378	0 - .5	19-MAR-93	Sodium	122.000	-	55.145	mg/kg
1972	110378	0 - .5	19-MAR-93	Silver	3.900	J	0	mg/kg
1972	110378	0 - .5	19-MAR-93	Potassium	1420.000	-	1349.53	mg/kg
1972	110378	0 - .5	19-MAR-93	Molybdenum	4.800	-	0	mg/kg
1972	110378	0 - .5	19-MAR-93	Magnesium	21700.000	-	1460	mg/kg
1972	110378	0 - .5	19-MAR-93	Copper	18.400	-	15.7	mg/kg
1972	110378	0 - .5	19-MAR-93	Chromium	17.300	-	17.057	mg/kg
1975	110385	0 - .5	22-MAR-93	Antimony	1.200	J	0	mg/kg
1975	110385	0 - .5	22-MAR-93	Calcium	68100.000	-	5296.781	mg/kg
1975	110385	0 - .5	22-MAR-93	Magnesium	19800.000	J	1460	mg/kg

TABLE F-2A
(Continued)

SAMPLE LOCATION	SAMPLE ID	SAMPLE INTERVALS	SAMPLE DATE	PARAMETER	RESULTS	VAL QUAL	BACKGROUND	UNITS
METALS (Continued)								
1975	110385	0 - .5	22-MAR-93	Sodium	103.000	-	55.145	mg/kg
1975	110385	0 - .5	22-MAR-93	Silver	5.200	-	0	mg/kg
1975	110385	0 - .5	22-MAR-93	Molybdenum	5.300	-	0	mg/kg
1975	110385	0 - .5	22-MAR-93	Beryllium	.610	-	.6	mg/kg
1976	110340	0 - .5	22-MAR-93	Beryllium	.870	-	.6	mg/kg
1976	110340	0 - .5	22-MAR-93	Sodium	120.000	-	55.145	mg/kg
1976	110340	0 - .5	22-MAR-93	Silver	5.000	-	0	mg/kg
1976	110340	0 - .5	22-MAR-93	Molybdenum	5.100	-	0	mg/kg
1976	110340	0 - .5	22-MAR-93	Magnesium	29700.000	J	1460	mg/kg
1976	110340	0 - .5	22-MAR-93	Calcium	86000.000	-	5296.781	mg/kg
1977	110304	0 - .5	19-MAR-93	Beryllium	.630	-	.6	mg/kg
1977	110304	0 - .5	19-MAR-93	Sodium	154.000	-	55.145	mg/kg
1977	110304	0 - .5	19-MAR-93	Silver	3.400	J	0	mg/kg
1977	110304	0 - .5	19-MAR-93	Magnesium	29000.000	-	1460	mg/kg
1977	110304	0 - .5	19-MAR-93	Calcium	82700.000	-	5296.781	mg/kg
1978	110335	0 - .5	22-MAR-93	Beryllium	.860	-	.6	mg/kg
1978	110335	0 - .5	22-MAR-93	Copper	16.700	-	15.7	mg/kg
1978	110335	0 - .5	22-MAR-93	Potassium	1560.000	-	1349.53	mg/kg
1978	110335	0 - .5	22-MAR-93	Sodium	83.300	-	55.145	mg/kg
1978	110335	0 - .5	22-MAR-93	Silver	6.000	-	0	mg/kg
1978	110335	0 - .5	22-MAR-93	Molybdenum	5.600	-	0	mg/kg
1978	110335	0 - .5	22-MAR-93	Magnesium	14100.000	J	1460	mg/kg
1978	110335	0 - .5	22-MAR-93	Calcium	34600.000	-	5296.781	mg/kg
SF-SS-10	110317	0 - .5	19-MAR-93	Barium	96.100	-	88.5	mg/kg
SF-SS-10	110317	0 - .5	19-MAR-93	Copper	17.100	-	15.7	mg/kg
SF-SS-10	110317	0 - .5	19-MAR-93	Sodium	114.000	-	55.145	mg/kg
SF-SS-10	110317	0 - .5	19-MAR-93	Silver	4.800	J	0	mg/kg
SF-SS-10	110317	0 - .5	19-MAR-93	Potassium	1700.000	-	1349.53	mg/kg
SF-SS-10	110317	0 - .5	19-MAR-93	Molybdenum	5.300	-	0	mg/kg
SF-SS-10	110317	0 - .5	19-MAR-93	Magnesium	13200.000	-	1460	mg/kg
SF-SS-10	110317	0 - .5	19-MAR-93	Lead	30.800	-	29.575	mg/kg
SF-SS-10	110317	0 - .5	19-MAR-93	Calcium	44600.000	-	5296.781	mg/kg
SF-SS-10	110317	0 - .5	19-MAR-93	Beryllium	.830	-	.6	mg/kg
SF-SS-10	110317	0 - .5	19-MAR-93	Cyanide	.320	-	.23	mg/kg
SF-SS-11	110321	0 - .5	19-MAR-93	Calcium	67000.000	-	5296.781	mg/kg
SF-SS-11	110321	0 - .5	19-MAR-93	Copper	16.200	-	15.7	mg/kg
SF-SS-11	110321	0 - .5	19-MAR-93	Magnesium	16700.000	-	1460	mg/kg
SF-SS-11	110321	0 - .5	19-MAR-93	Silver	5.600	J	0	mg/kg
SF-SS-11	110321	0 - .5	19-MAR-93	Sodium	150.000	-	55.145	mg/kg
SF-SS-11	110321	0 - .5	19-MAR-93	Molybdenum	5.800	-	0	mg/kg
SF-SS-16	110343	0 - .5	22-MAR-93	Beryllium	.840	-	.6	mg/kg
SF-SS-16	110343	0 - .5	22-MAR-93	Calcium	42100.000	-	5296.781	mg/kg
SF-SS-16	110343	0 - .5	22-MAR-93	Sodium	88.700	-	55.145	mg/kg

TABLE F-2A
(Continued)

SAMPLE LOCATION	SAMPLE ID	SAMPLE INTERVALS	SAMPLE DATE	PARAMETER	RESULTS	VAL QUAL	BACKGROUND	UNITS
METALS (Continued)								
SF-SS-16	110343	0 - .5	22-MAR-93	Silver	5.700	-	0	mg/kg
SF-SS-16	110343	0 - .5	22-MAR-93	Potassium	1690.000	-	1349.53	mg/kg
SF-SS-16	110343	0 - .5	22-MAR-93	Molybdenum	5.100	-	0	mg/kg
SF-SS-16	110343	0 - .5	22-MAR-93	Magnesium	13600.000	J	1460	mg/kg
SF-SS-16	110343	0 - .5	22-MAR-93	Copper	15.800	-	15.7	mg/kg
SF-SS-17	110297	0 - .5	18-MAR-93	Aluminum	16300.000	-	13125.282	mg/kg
SF-SS-17	110297	0 - .5	18-MAR-93	Calcium	88500.000	-	5296.781	mg/kg
SF-SS-17	110297	0 - .5	18-MAR-93	Magnesium	18900.000	-	1460	mg/kg
SF-SS-17	110297	0 - .5	18-MAR-93	Beryllium	1.900	-	.6	mg/kg
SF-SS-17	110297	0 - .5	18-MAR-93	Barium	151.000	-	88.5	mg/kg
SF-SS-17	110297	0 - .5	18-MAR-93	Chromium	21.500	-	17.057	mg/kg
SF-SS-17	110297	0 - .5	18-MAR-93	Zinc	67.800	-	58.5	mg/kg
SF-SS-17	110297	0 - .5	18-MAR-93	Sodium	328.000	-	55.145	mg/kg
SF-SS-17	110297	0 - .5	18-MAR-93	Silver	4.400	J	0	mg/kg
SF-SS-17	110297	0 - .5	18-MAR-93	Potassium	1600.000	-	1349.53	mg/kg
SF-SS-17	110297	0 - .5	18-MAR-93	Manganese	2650.000	-	2257.945	mg/kg
SF-SS-18	110287	0 - .5	18-MAR-93	Calcium	140000.000	-	5296.781	mg/kg
SF-SS-18	110287	0 - .5	18-MAR-93	Sodium	131.000	-	55.145	mg/kg
SF-SS-18	110287	0 - .5	18-MAR-93	Magnesium	18200.000	-	1460	mg/kg
SF-SS-19	110365	0 - .5	22-MAR-93	Calcium	87600.000	-	5296.781	mg/kg
SF-SS-19	110365	0 - .5	22-MAR-93	Molybdenum	4.000	-	0	mg/kg
SF-SS-19	110365	0 - .5	22-MAR-93	Sodium	122.000	-	55.145	mg/kg
SF-SS-19	110365	0 - .5	22-MAR-93	Silver	3.200	-	0	mg/kg
SF-SS-19	110365	0 - .5	22-MAR-93	Lead	46.000	J	29.575	mg/kg
SF-SS-19	110365	0 - .5	22-MAR-93	Magnesium	28200.000	J	1460	mg/kg
SF-SS-20	110290	0 - .5	19-MAR-93	Calcium	81600.000	-	5296.781	mg/kg
SF-SS-20	110290	0 - .5	19-MAR-93	Sodium	107.000	-	55.145	mg/kg
SF-SS-20	110290	0 - .5	19-MAR-93	Magnesium	20600.000	-	1460	mg/kg
SF-SS-20	110290	0 - .5	19-MAR-93	Silver	4.000	J	0	mg/kg
SF-SS-21	110307	0 - .5	18-MAR-93	Barium	110.000	-	88.5	mg/kg
SF-SS-21	110307	0 - .5	18-MAR-93	Sodium	69.500	-	55.145	mg/kg
SF-SS-21	110307	0 - .5	18-MAR-93	Silver	5.500	J	0	mg/kg
SF-SS-21	110307	0 - .5	18-MAR-93	Molybdenum	5.200	-	0	mg/kg
SF-SS-21	110307	0 - .5	18-MAR-93	Magnesium	6490.000	-	1460	mg/kg
SF-SS-21	110307	0 - .5	18-MAR-93	Copper	17.600	-	15.7	mg/kg
SF-SS-21	110307	0 - .5	18-MAR-93	Calcium	12900.000	-	5296.781	mg/kg
SF-SS-21	110307	0 - .5	18-MAR-93	Beryllium	1.000	-	.6	mg/kg
RADIONUCLIDES								
1964	110331	0 - .5	22-MAR-93	GROSS ALPHA	25.200	-	0	pCi/g
1964	110331	0 - .5	22-MAR-93	PU-238	.091	J	0	pCi/g
1964	110331	0 - .5	22-MAR-93	GROSS BETA	39.000	-	0	pCi/g
1964	110331	0 - .5	22-MAR-93	U-TOTAL	10.500	-	3.24	mg/kg

TABLE F-2A
(Continued)

SAMPLE LOCATION	SAMPLE ID	SAMPLE INTERVALS	SAMPLE DATE	PARAMETER	RESULTS	VAL QUAL	BACKGROUND	UNITS
RADIONUCLIDES (Continued)								
1964	110331	0 - .5	22-MAR-93	U-238	3.470	-	1.27	pCi/g
1964	110331	0 - .5	22-MAR-93	U-234	3.430	-	1.319	pCi/g
1964	110331	0 - .5	22-MAR-93	SR-90	.355	N	0	pCi/g
1964	110331	0 - .5	22-MAR-93	PU-239/240	.043	J	0	pCi/g
1964	110331	0 - .5	22-MAR-93	NP-237	.180	N	0	pCi/g
1965	110351	0 - .5	22-MAR-93	GROSS ALPHA	62.000	-	0	pCi/g
1965	110351	0 - .5	22-MAR-93	NP-237	.483	N	0	pCi/g
1965	110351	0 - .5	22-MAR-93	RA-226	1.800	-	1.528	pCi/g
1965	110351	0 - .5	22-MAR-93	U-235/236	.887	-	.181	pCi/g
1965	110351	0 - .5	22-MAR-93	U-234	16.300	-	1.319	pCi/g
1965	110351	0 - .5	22-MAR-93	U-TOTAL	49.000	-	3.24	mg/kg
1965	110351	0 - .5	22-MAR-93	U-238	16.600	-	1.27	pCi/g
1965	110351	0 - .5	22-MAR-93	SR-90	.534	-	0	pCi/g
1965	110351	0 - .5	22-MAR-93	RA-228	1.210	-	1.17	pCi/g
1965	110351	0 - .5	22-MAR-93	PU-239/240	.024	J	0	pCi/g
1965	110351	0 - .5	22-MAR-93	PU-238	.019	J	0	pCi/g
1965	110351	0 - .5	22-MAR-93	GROSS BETA	56.600	-	0	pCi/g
1966	110355	0 - .5	22-MAR-93	GROSS ALPHA	79.500	-	0	pCi/g
1966	110355	0 - .5	22-MAR-93	GROSS BETA	53.700	-	0	pCi/g
1966	110355	0 - .5	22-MAR-93	U-TOTAL	38.100	-	3.24	mg/kg
1966	110355	0 - .5	22-MAR-93	U-238	11.300	-	1.27	pCi/g
1966	110355	0 - .5	22-MAR-93	U-235/236	.515	-	.181	pCi/g
1966	110355	0 - .5	22-MAR-93	U-234	10.000	-	1.319	pCi/g
1966	110355	0 - .5	22-MAR-93	TH-TOTAL	36.700	-	10.7	mg/kg
1966	110355	0 - .5	22-MAR-93	TH-232	3.990	-	1.469	pCi/g
1966	110355	0 - .5	22-MAR-93	TH-230	12.100	-	2.112	pCi/g
1966	110355	0 - .5	22-MAR-93	TH-228	4.410	-	1.519	pCi/g
1966	110355	0 - .5	22-MAR-93	RA-228	3.880	-	1.17	pCi/g
1966	110355	0 - .5	22-MAR-93	RA-226	1.740	-	1.528	pCi/g
1966	110355	0 - .5	22-MAR-93	PU-239/240	.076	J	0	pCi/g
1966	110355	0 - .5	22-MAR-93	PU-238	.116	J	0	pCi/g
1966	110355	0 - .5	22-MAR-93	NP-237	.214	N	0	pCi/g
1967	110358	0 - .5	22-MAR-93	GROSS ALPHA	20.800	-	0	pCi/g
1967	110358	0 - .5	22-MAR-93	PU-238	.128	J	0	pCi/g
1967	110358	0 - .5	22-MAR-93	U-TOTAL	12.500	-	3.24	mg/kg
1967	110358	0 - .5	22-MAR-93	U-238	4.410	-	1.27	pCi/g
1967	110358	0 - .5	22-MAR-93	U-235/236	.198	J	.181	pCi/g
1967	110358	0 - .5	22-MAR-93	U-234	4.460	-	1.319	pCi/g
1967	110358	0 - .5	22-MAR-93	GROSS BETA	37.700	-	0	pCi/g
1968	110392	0 - .5	22-MAR-93	GROSS ALPHA	33.500	-	0	pCi/g
1968	110392	0 - .5	22-MAR-93	NP-237	.185	N	0	pCi/g
1968	110392	0 - .5	22-MAR-93	U-TOTAL	31.200	-	3.24	mg/kg
1968	110392	0 - .5	22-MAR-93	U-238	9.840	-	1.27	pCi/g

0491

5174

TABLE F-2A
(Continued)

SAMPLE LOCATION	SAMPLE ID	SAMPLE INTERVALS	SAMPLE DATE	PARAMETER	RESULTS	VAL QUAL	BACKGROUND	UNITS
RADIONUCLIDES (Continued)								
1968	110392	0 - .5	22-MAR-93	U-235/236	.303	J	.181	pCi/g
1968	110392	0 - .5	22-MAR-93	U-234	9.710	-	1.319	pCi/g
1968	110392	0 - .5	22-MAR-93	GROSS BETA	48.800	-	0	pCi/g
1968	110392	0 - .5	22-MAR-93	PU-239/240	.061	J	0	pCi/g
1968	110392	0 - .5	22-MAR-93	PU-238	.072	J	0	pCi/g
1969	110338	0 - .5	22-MAR-93	GROSS ALPHA	19.000	-	0	pCi/g
1969	110338	0 - .5	22-MAR-93	GROSS BETA	35.000	-	0	pCi/g
1969	110338	0 - .5	22-MAR-93	U-TOTAL	16.700	-	3.24	mg/kg
1969	110338	0 - .5	22-MAR-93	U-238	3.790	-	1.27	pCi/g
1969	110338	0 - .5	22-MAR-93	U-235/236	.197	J	.181	pCi/g
1969	110338	0 - .5	22-MAR-93	U-234	3.580	-	1.319	pCi/g
1969	110338	0 - .5	22-MAR-93	PU-239/240	.019	J	0	pCi/g
1969	110338	0 - .5	22-MAR-93	PU-238	.044	J	0	pCi/g
1969	110338	0 - .5	22-MAR-93	NP-237	.136	N	0	pCi/g
1970	110372	0 - .5	22-MAR-92	GROSS ALPHA	31.400	-	0	pCi/g
1970	110372	0 - .5	22-MAR-92	U-TOTAL	27.400	-	3.24	mg/kg
1970	110372	0 - .5	22-MAR-92	U-238	7.720	-	1.27	pCi/g
1970	110372	0 - .5	22-MAR-92	U-234	7.440	-	1.319	pCi/g
1970	110372	0 - .5	22-MAR-92	GROSS BETA	41.300	-	0	pCi/g
1970	110372	0 - .5	22-MAR-92	U-235/236	.315	J	.181	pCi/g
1970	110372	0 - .5	22-MAR-92	TH-230	2.210	-	2.112	pCi/g
1971	110324	0 - .5	22-MAR-93	GROSS ALPHA	18.700	-	0	pCi/g
1971	110324	0 - .5	22-MAR-93	GROSS BETA	34.700	-	0	pCi/g
1971	110324	0 - .5	22-MAR-93	U-TOTAL	25.500	-	3.24	mg/kg
1971	110324	0 - .5	22-MAR-93	U-238	6.480	-	1.27	pCi/g
1971	110324	0 - .5	22-MAR-93	U-235/236	.344	-	.181	pCi/g
1971	110324	0 - .5	22-MAR-93	U-234	6.040	-	1.319	pCi/g
1971	110324	0 - .5	22-MAR-93	PU-239/240	.021	J	0	pCi/g
1972	110378	0 - .5	19-MAR-93	GROSS ALPHA	234.000	J	0	pCi/g
1972	110378	0 - .5	19-MAR-93	PU-239/240	.042	J	0	pCi/g
1972	110378	0 - .5	19-MAR-93	U-TOTAL	28.300	-	3.24	mg/kg
1972	110378	0 - .5	19-MAR-93	U-238	6.880	-	1.27	pCi/g
1972	110378	0 - .5	19-MAR-93	U-235/236	.299	J	.181	pCi/g
1972	110378	0 - .5	19-MAR-93	U-234	6.180	-	1.319	pCi/g
1972	110378	0 - .5	19-MAR-93	RA-226	21.600	-	1.528	pCi/g
1972	110378	0 - .5	19-MAR-93	PU-238	.341	J	0	pCi/g
1972	110378	0 - .5	19-MAR-93	GROSS BETA	94.700	J	0	pCi/g
1975	110385	0 - .5	22-MAR-93	GROSS ALPHA	47.500	-	0	pCi/g
1975	110385	0 - .5	22-MAR-93	U-TOTAL	23.800	-	3.24	mg/kg
1975	110385	0 - .5	22-MAR-93	U-238	6.920	-	1.27	pCi/g
1975	110385	0 - .5	22-MAR-93	U-235/236	.350	J	.181	pCi/g
1975	110385	0 - .5	22-MAR-93	U-234	6.620	-	1.319	pCi/g
1975	110385	0 - .5	22-MAR-93	TH-230	3.520	-	2.112	pCi/g

TABLE F-2A
(Continued)

SAMPLE LOCATION	SAMPLE ID	SAMPLE INTERVALS	SAMPLE DATE	PARAMETER	RESULTS	VAL QUAL	BACKGROUND	UNITS
RADIONUCLIDES (Continued)								
1975	110385	0 - .5	22-MAR-93	TC-99	142.000	J	0	pCi/g
1975	110385	0 - .5	22-MAR-93	SR-90	.160	J	0	pCi/g
1975	110385	0 - .5	22-MAR-93	PU-238	.019	-	0	pCi/g
1975	110385	0 - .5	22-MAR-93	NP-237	.110	N	0	pCi/g
1975	110385	0 - .5	22-MAR-93	GROSS BETA	45.200	-	0	pCi/g
1976	110340	0 - .5	22-MAR-93	GROSS ALPHA	33.900	-	0	pCi/g
1976	110340	0 - .5	22-MAR-93	PU-239/240	.049	J	0	pCi/g
1976	110340	0 - .5	22-MAR-93	PU-238	.039	J	0	pCi/g
1976	110340	0 - .5	22-MAR-93	U-234	3.200	-	1.319	pCi/g
1976	110340	0 - .5	22-MAR-93	U-TOTAL	10.400	-	3.24	mg/kg
1976	110340	0 - .5	22-MAR-93	U-238	3.540	-	1.27	pCi/g
1976	110340	0 - .5	22-MAR-93	U-235/236	.226	J	.181	pCi/g
1976	110340	0 - .5	22-MAR-93	NP-237	.239	N	0	pCi/g
1976	110340	0 - .5	22-MAR-93	GROSS BETA	32.200	-	0	pCi/g
1977	110304	0 - .5	19-MAR-93	GROSS ALPHA	20.300	J	0	pCi/g
1977	110304	0 - .5	19-MAR-93	U-TOTAL	19.000	-	3.24	mg/kg
1977	110304	0 - .5	19-MAR-93	U-238	4.150	-	1.27	pCi/g
1977	110304	0 - .5	19-MAR-93	U-234	3.320	-	1.319	pCi/g
1977	110304	0 - .5	19-MAR-93	RA-228	1.180	-	1.17	pCi/g
1977	110304	0 - .5	19-MAR-93	PU-239/240	.061	J	0	pCi/g
1977	110304	0 - .5	19-MAR-93	PU-238	.035	J	0	pCi/g
1977	110304	0 - .5	19-MAR-93	NP-237	.336	N	0	pCi/g
1977	110304	0 - .5	19-MAR-93	GROSS BETA	29.000	J	0	pCi/g
1978	110335	0 - .5	22-MAR-93	GROSS ALPHA	41.800	-	0	pCi/g
1978	110335	0 - .5	22-MAR-93	U-238	5.350	-	1.27	pCi/g
1978	110335	0 - .5	22-MAR-93	U-235/236	.210	J	.181	pCi/g
1978	110335	0 - .5	22-MAR-93	U-TOTAL	18.800	-	3.24	mg/kg
1978	110335	0 - .5	22-MAR-93	U-234	4.980	-	1.319	pCi/g
1978	110335	0 - .5	22-MAR-93	PU-239/240	.058	J	0	pCi/g
1978	110335	0 - .5	22-MAR-93	PU-238	.058	J	0	pCi/g
1978	110335	0 - .5	22-MAR-93	SR-90	1.000	-	0	pCi/g
1978	110335	0 - .5	22-MAR-93	NP-237	.177	N	0	pCi/g
1978	110335	0 - .5	22-MAR-93	GROSS BETA	43.500	-	0	pCi/g
SF-SS-10	110317	0 - .5	19-MAR-93	GROSS ALPHA	237.000	J	0	pCi/g
SF-SS-10	110317	0 - .5	19-MAR-93	U-TOTAL	36.000	-	3.24	mg/kg
SF-SS-10	110317	0 - .5	19-MAR-93	U-238	9.060	-	1.27	pCi/g
SF-SS-10	110317	0 - .5	19-MAR-93	U-235/236	.346	J	.181	pCi/g
SF-SS-10	110317	0 - .5	19-MAR-93	U-234	8.010	-	1.319	pCi/g
SF-SS-10	110317	0 - .5	19-MAR-93	TH-TOTAL	11.040	-	10.7	mg/kg
SF-SS-10	110317	0 - .5	19-MAR-93	TH-230	13.800	-	2.112	pCi/g
SF-SS-10	110317	0 - .5	19-MAR-93	RA-228	1.650	-	1.17	pCi/g
SF-SS-10	110317	0 - .5	19-MAR-93	RA-226	30.800	-	1.528	pCi/g
SF-SS-10	110317	0 - .5	19-MAR-93	PU-239/240	.065	J	0	pCi/g

TABLE F-2A
(Continued)

SAMPLE LOCATION	SAMPLE ID	SAMPLE INTERVALS	SAMPLE DATE	PARAMETER	RESULTS	VAL QUAL	BACKGROUND	UNITS
RADIONUCLIDES (Continued)								
SF-SS-10	110317	0 - .5	19-MAR-93	PU-238	.046	J	0	pCi/g
SF-SS-10	110317	0 - .5	19-MAR-93	GROSS BETA	113.000	J	0	pCi/g
SF-SS-10	110317	0 - .5	19-MAR-93	NP-237	.226	N	0	pCi/g
SF-SS-11	110321	0 - .5	19-MAR-93	GROSS ALPHA	39.300	-	0	pCi/g
SF-SS-11	110321	0 - .5	19-MAR-93	TH-228	1.710	-	1.519	pCi/g
SF-SS-11	110321	0 - .5	19-MAR-93	RA-228	1.920	-	1.17	pCi/g
SF-SS-11	110321	0 - .5	19-MAR-93	U-TOTAL	50.600	-	3.24	mg/kg
SF-SS-11	110321	0 - .5	19-MAR-93	U-238	15.100	-	1.27	pCi/g
SF-SS-11	110321	0 - .5	19-MAR-93	U-235/236	.771	-	.181	pCi/g
SF-SS-11	110321	0 - .5	19-MAR-93	U-234	13.700	-	1.319	pCi/g
SF-SS-11	110321	0 - .5	19-MAR-93	TH-TOTAL	13.100	-	10.7	mg/kg
SF-SS-11	110321	0 - .5	19-MAR-93	TH-230	2.220	-	2.112	pCi/g
SF-SS-11	110321	0 - .5	19-MAR-93	GROSS BETA	43.200	-	0	pCi/g
SF-SS-16	110343	0 - .5	22-MAR-93	GROSS ALPHA	29.900	-	0	pCi/g
SF-SS-16	110343	0 - .5	22-MAR-93	U-238	6.530	-	1.27	pCi/g
SF-SS-16	110343	0 - .5	22-MAR-93	U-235/236	.285	J	.181	pCi/g
SF-SS-16	110343	0 - .5	22-MAR-93	U-234	6.440	-	1.319	pCi/g
SF-SS-16	110343	0 - .5	22-MAR-93	GROSS BETA	32.200	-	0	pCi/g
SF-SS-16	110343	0 - .5	22-MAR-93	RA-228	1.200	-	1.17	pCi/g
SF-SS-16	110343	0 - .5	22-MAR-93	PU-239/240	.049	J	0	pCi/g
SF-SS-16	110343	0 - .5	22-MAR-93	NP-237	.092	N	0	pCi/g
SF-SS-17	110297	0 - .5	18-MAR-93	GROSS ALPHA	30.300	-	0	pCi/g
SF-SS-17	110297	0 - .5	18-MAR-93	U-TOTAL	28.400	-	3.24	mg/kg
SF-SS-17	110297	0 - .5	18-MAR-93	U-238	5.990	J	1.27	pCi/g
SF-SS-17	110297	0 - .5	18-MAR-93	U-235/236	.258	J	.181	pCi/g
SF-SS-17	110297	0 - .5	18-MAR-93	U-234	4.940	J	1.319	pCi/g
SF-SS-17	110297	0 - .5	18-MAR-93	RA-228	1.310	-	1.17	pCi/g
SF-SS-17	110297	0 - .5	18-MAR-93	RA-226	1.920	-	1.528	pCi/g
SF-SS-17	110297	0 - .5	18-MAR-93	GROSS BETA	31.800	-	0	pCi/g
SF-SS-18	110287	0 - .5	18-MAR-93	GROSS ALPHA	22.500	-	0	pCi/g
SF-SS-18	110287	0 - .5	18-MAR-93	U-234	2.730	J	1.319	pCi/g
SF-SS-18	110287	0 - .5	18-MAR-93	PU-238	.125	J	0	pCi/g
SF-SS-18	110287	0 - .5	18-MAR-93	U-238	2.870	J	1.27	pCi/g
SF-SS-18	110287	0 - .5	18-MAR-93	U-TOTAL	17.200	-	3.24	mg/kg
SF-SS-18	110287	0 - .5	18-MAR-93	SR-90	.942	J	0	pCi/g
SF-SS-18	110287	0 - .5	18-MAR-93	GROSS BETA	27.700	-	0	pCi/g
SF-SS-19	110365	0 - .5	22-MAR-93	GROSS ALPHA	28.600	-	0	pCi/g
SF-SS-19	110365	0 - .5	22-MAR-93	U-TOTAL	16.300	-	3.24	mg/kg
SF-SS-19	110365	0 - .5	22-MAR-93	U-238	5.460	-	1.27	pCi/g
SF-SS-19	110365	0 - .5	22-MAR-93	U-234	4.260	-	1.319	pCi/g
SF-SS-19	110365	0 - .5	22-MAR-93	TH-230	2.330	-	2.112	pCi/g
SF-SS-19	110365	0 - .5	22-MAR-93	PU-239/240	.045	J	0	pCi/g
SF-SS-19	110365	0 - .5	22-MAR-93	PU-238	.057	J	0	pCi/g

TABLE F-2A
(Continued)

SAMPLE LOCATION	SAMPLE ID	SAMPLE INTERVALS	SAMPLE DATE	PARAMETER	RESULTS	VAL QUAL	BACKGROUND	UNITS
RADIONUCLIDES (Continued)								
SF-SS-19	110365	0 - .5	22-MAR-93	NP-237	.110	N	0	pCi/g
SF-SS-19	110365	0 - .5	22-MAR-93	GROSS BETA	41.000	-	0	pCi/g
SF-SS-20	110290	0 - .5	19-MAR-93	GROSS ALPHA	42.600	-	0	pCi/g
SF-SS-20	110290	0 - .5	19-MAR-93	GROSS BETA	34.500	-	0	pCi/g
SF-SS-20	110290	0 - .5	19-MAR-93	U-235/236	.470	J	.181	pCi/g
SF-SS-20	110290	0 - .5	19-MAR-93	U-238	11.680	J	1.27	pCi/g
SF-SS-20	110290	0 - .5	19-MAR-93	U-TOTAL	36.400	-	3.24	mg/kg
SF-SS-20	110290	0 - .5	19-MAR-93	U-234	11.560	J	1.319	pCi/g
SF-SS-20	110290	0 - .5	19-MAR-93	RA-228	1.260	-	1.17	pCi/g
SF-SS-21	110307	0 - .5	18-MAR-93	GROSS ALPHA	50.700	-	0	pCi/g
SF-SS-21	110307	0 - .5	18-MAR-93	U-TOTAL	24.500	-	3.24	mg/kg
SF-SS-21	110307	0 - .5	18-MAR-93	U-238	9.320	J	1.27	pCi/g
SF-SS-21	110307	0 - .5	18-MAR-93	U-235/236	.458	J	.181	pCi/g
SF-SS-21	110307	0 - .5	18-MAR-93	U-234	7.930	J	1.319	pCi/g
SF-SS-21	110307	0 - .5	18-MAR-93	RA-228	1.290	-	1.17	pCi/g
SF-SS-21	110307	0 - .5	18-MAR-93	RA-226	3.240	-	1.528	pCi/g
SF-SS-21	110307	0 - .5	18-MAR-93	GROSS BETA	32.300	-	0	pCi/g
SF-SS-21	110307	0 - .5	18-MAR-93	NP-237	.056	N	0	pCi/g
VOLATILE ORGANICS								
1966	110355	0 - .5	22-MAR-93	Methylene chloride	5.000	J	0	ug/kg
1968	110392	0 - .5	22-MAR-93	Acetone	19.000	-	0	ug/kg
1970	110372	0 - .5	22-MAR-92	Acetone	68.000	-	0	ug/kg
1975	110385	0 - .5	22-MAR-93	Acetone	19.000	-	0	ug/kg
1975	110385	0 - .5	22-MAR-93	Methylene chloride	3.000	J	0	ug/kg
SF-SS-20	110290	0 - .5	19-MAR-93	Acetone	9.000	J	0	ug/kg
SF-SS-21	110307	0 - .5	18-MAR-93	Acetone	7.000	J	0	ug/kg
SEMIVOLATILE ORGANICS								
1964	110331	0 - .5	22-MAR-93	Benzoic acid	270.000	J	0	ug/kg
1964	110331	0 - .5	22-MAR-93	bis(2-Ethylhexyl) phthalate	91.000	J	0	ug/kg
1964	110331	0 - .5	22-MAR-93	Fluoranthene	45.000	J	0	ug/kg
1965	110351	0 - .5	22-MAR-93	Benzoic acid	95.000	J	0	ug/kg
1965	110351	0 - .5	22-MAR-93	bis(2-Ethylhexyl) phthalate	110.000	J	0	ug/kg
1966	110355	0 - .5	22-MAR-93	bis(2-Ethylhexyl) phthalate	91.000	J	0	ug/kg
1967	110358	0 - .5	22-MAR-93	Benzoic acid	72.000	J	0	ug/kg
1967	110358	0 - .5	22-MAR-93	bis(2-Ethylhexyl) phthalate	73.000	J	0	ug/kg
1968	110392	0 - .5	22-MAR-93	Benzo(a)anthracene	51.000	J	0	ug/kg
1968	110392	0 - .5	22-MAR-93	Benzo(b)fluoranthene	62.000	J	0	ug/kg
1968	110392	0 - .5	22-MAR-93	Benzo(a)pyrene	55.000	J	0	ug/kg
1968	110392	0 - .5	22-MAR-93	bis(2-Ethylhexyl) phthalate	87.000	J	0	ug/kg
1968	110392	0 - .5	22-MAR-93	Pyrene	86.000	J	0	ug/kg
1968	110392	0 - .5	22-MAR-93	Fluoranthene	110.000	J	0	ug/kg

0495

5174

TABLE F-2A
(Continued)

SAMPLE LOCATION	SAMPLE ID	SAMPLE INTERVALS	SAMPLE DATE	PARAMETER	RESULTS	VAL QUAL	BACKGROUND	UNITS
SEMIVOLATILE ORGANICS (Continued)								
1968	110392	0 - .5	22-MAR-93	Chrysene	70.000	J	0	ug/kg
1968	110392	0 - .5	22-MAR-93	Benzoic acid	60.000	J	0	ug/kg
1968	110392	0 - .5	22-MAR-93	Benzo(k)fluoranthene	53.000	J	0	ug/kg
1969	110338	0 - .5	22-MAR-93	Benzo(g,h,i)perylene	160.000	J	0	ug/kg
1969	110338	0 - .5	22-MAR-93	bis(2-Ethylhexyl) phthalate	89.000	J	0	ug/kg
1969	110338	0 - .5	22-MAR-93	Fluoranthene	53.000	J	0	ug/kg
1969	110338	0 - .5	22-MAR-93	Benzoic acid	62.000	J	0	ug/kg
1970	110372	0 - .5	22-MAR-92	Benzo(a)anthracene	58.000	J	0	ug/kg
1970	110372	0 - .5	22-MAR-92	Benzo(a)pyrene	67.000	J	0	ug/kg
1970	110372	0 - .5	22-MAR-92	Chrysene	83.000	J	0	ug/kg
1970	110372	0 - .5	22-MAR-92	Benzo(g,h,i)perylene	51.000	J	0	ug/kg
1970	110372	0 - .5	22-MAR-92	bis(2-Ethylhexyl) phthalate	91.000	J	0	ug/kg
1970	110372	0 - .5	22-MAR-92	Pyrene	100.000	J	0	ug/kg
1970	110372	0 - .5	22-MAR-92	Phenanthrene	48.000	J	0	ug/kg
1970	110372	0 - .5	22-MAR-92	Indeno(1,2,3-cd)pyrene	52.000	J	0	ug/kg
1970	110372	0 - .5	22-MAR-92	Fluoranthene	130.000	J	0	ug/kg
1970	110372	0 - .5	22-MAR-92	Benzoic acid	63.000	J	0	ug/kg
1970	110372	0 - .5	22-MAR-92	Benzo(k)fluoranthene	69.000	J	0	ug/kg
1970	110372	0 - .5	22-MAR-92	Benzo(b)fluoranthene	74.000	J	0	ug/kg
1971	110324	0 - .5	22-MAR-93	Benzo(a)anthracene	44.000	J	0	ug/kg
1971	110324	0 - .5	22-MAR-93	Fluoranthene	120.000	J	0	ug/kg
1971	110324	0 - .5	22-MAR-93	Benzo(k)fluoranthene	52.000	J	0	ug/kg
1971	110324	0 - .5	22-MAR-93	Phenanthrene	67.000	J	0	ug/kg
1971	110324	0 - .5	22-MAR-93	bis(2-Ethylhexyl) phthalate	80.000	J	0	ug/kg
1971	110324	0 - .5	22-MAR-93	Pyrene	93.000	J	0	ug/kg
1971	110324	0 - .5	22-MAR-93	Chrysene	63.000	J	0	ug/kg
1972	110378	0 - .5	19-MAR-93	Acenaphthylene	1200.000	J	0	ug/kg
1972	110378	0 - .5	19-MAR-93	Anthracene	730.000	J	0	ug/kg
1972	110378	0 - .5	19-MAR-93	Pyrene	8200.000	-	0	ug/kg
1972	110378	0 - .5	19-MAR-93	Phenanthrene	1200.000	J	0	ug/kg
1972	110378	0 - .5	19-MAR-93	Indeno(1,2,3-cd)pyrene	6000.000	-	0	ug/kg
1972	110378	0 - .5	19-MAR-93	Fluoranthene	9200.000	-	0	ug/kg
1972	110378	0 - .5	19-MAR-93	Dibenzo(a,h)anthracene	1900.000	J	0	ug/kg
1972	110378	0 - .5	19-MAR-93	Chrysene	6000.000	-	0	ug/kg
1972	110378	0 - .5	19-MAR-93	Benzo(k)fluoranthene	7300.000	-	0	ug/kg
1972	110378	0 - .5	19-MAR-93	Benzo(g,h,i)perylene	6200.000	-	0	ug/kg
1972	110378	0 - .5	19-MAR-93	Benzo(b)fluoranthene	6200.000	-	0	ug/kg
1972	110378	0 - .5	19-MAR-93	Benzo(a)pyrene	9400.000	-	0	ug/kg
1972	110378	0 - .5	19-MAR-93	Benzo(a)anthracene	5500.000	-	0	ug/kg
1975	110385	0 - .5	22-MAR-93	Fluoranthene	48.000	J	0	ug/kg
1975	110385	0 - .5	22-MAR-93	bis(2-Ethylhexyl) phthalate	64.000	J	0	ug/kg
1976	110340	0 - .5	22-MAR-93	Acenaphthylene	55.000	J	0	ug/kg
1976	110340	0 - .5	22-MAR-93	Benzo(a)anthracene	180.000	J	0	ug/kg

TABLE F-2A
(Continued)

SAMPLE LOCATION	SAMPLE ID	SAMPLE INTERVALS	SAMPLE DATE	PARAMETER	RESULTS	VAL QUAL	BACKGROUND	UNITS
SEMIVOLATILE ORGANICS (Continued)								
1976	110340	0 - .5	22-MAR-93	Benzoic acid	56.000	J	0	ug/kg
1976	110340	0 - .5	22-MAR-93	Benzo(k)fluoranthene	290.000	J	0	ug/kg
1976	110340	0 - .5	22-MAR-93	bis(2-Ethylhexyl) phthalate	80.000	J	0	ug/kg
1976	110340	0 - .5	22-MAR-93	Pyrene	270.000	J	0	ug/kg
1976	110340	0 - .5	22-MAR-93	Phenanthrene	81.000	J	0	ug/kg
1976	110340	0 - .5	22-MAR-93	Indeno(1,2,3-cd)pyrene	210.000	J	0	ug/kg
1976	110340	0 - .5	22-MAR-93	Fluoranthene	320.000	J	0	ug/kg
1976	110340	0 - .5	22-MAR-93	Dibenzo(a,h)anthracene	69.000	J	0	ug/kg
1976	110340	0 - .5	22-MAR-93	Chrysene	240.000	J	0	ug/kg
1976	110340	0 - .5	22-MAR-93	Benzo(g,h,i)perylene	210.000	J	0	ug/kg
1976	110340	0 - .5	22-MAR-93	Benzo(b)fluoranthene	240.000	J	0	ug/kg
1976	110340	0 - .5	22-MAR-93	Benzo(a)pyrene	280.000	J	0	ug/kg
1977	110304	0 - .5	19-MAR-93	Acenaphthylene	130.000	J	0	ug/kg
1977	110304	0 - .5	19-MAR-93	Anthracene	130.000	J	0	ug/kg
1977	110304	0 - .5	19-MAR-93	Benzo(a)anthracene	630.000	-	0	ug/kg
1977	110304	0 - .5	19-MAR-93	Benzo(a)pyrene	800.000	-	0	ug/kg
1977	110304	0 - .5	19-MAR-93	bis(2-Ethylhexyl) phthalate	66.000	J	0	ug/kg
1977	110304	0 - .5	19-MAR-93	Pyrene	930.000	-	0	ug/kg
1977	110304	0 - .5	19-MAR-93	Phenanthrene	380.000	J	0	ug/kg
1977	110304	0 - .5	19-MAR-93	Indeno(1,2,3-cd)pyrene	620.000	-	0	ug/kg
1977	110304	0 - .5	19-MAR-93	Fluoranthene	1000.000	-	0	ug/kg
1977	110304	0 - .5	19-MAR-93	Dibenzo(a,h)anthracene	230.000	J	0	ug/kg
1977	110304	0 - .5	19-MAR-93	Chrysene	750.000	-	0	ug/kg
1977	110304	0 - .5	19-MAR-93	Carbazole	67.000	J	0	ug/kg
1977	110304	0 - .5	19-MAR-93	Benzo(k)fluoranthene	710.000	-	0	ug/kg
1977	110304	0 - .5	19-MAR-93	Benzo(g,h,i)perylene	650.000	-	0	ug/kg
1977	110304	0 - .5	19-MAR-93	Benzo(b)fluoranthene	670.000	-	0	ug/kg
1978	110335	0 - .5	22-MAR-93	bis(2-Ethylhexyl) phthalate	82.000	J	0	ug/kg
SF-SS-10	110317	0 - .5	19-MAR-93	Anthracene	87.000	J	0	ug/kg
SF-SS-10	110317	0 - .5	19-MAR-93	bis(2-Ethylhexyl) phthalate	91.000	J	0	ug/kg
SF-SS-10	110317	0 - .5	19-MAR-93	Pyrene	480.000	-	0	ug/kg
SF-SS-10	110317	0 - .5	19-MAR-93	Phenanthrene	410.000	J	0	ug/kg
SF-SS-10	110317	0 - .5	19-MAR-93	Indeno(1,2,3-cd)pyrene	150.000	J	0	ug/kg
SF-SS-10	110317	0 - .5	19-MAR-93	Fluoranthene	640.000	-	0	ug/kg
SF-SS-10	110317	0 - .5	19-MAR-93	Dibenzo(a,h)anthracene	66.000	J	0	ug/kg
SF-SS-10	110317	0 - .5	19-MAR-93	Chrysene	310.000	J	0	ug/kg
SF-SS-10	110317	0 - .5	19-MAR-93	Benzo(k)fluoranthene	240.000	J	0	ug/kg
SF-SS-10	110317	0 - .5	19-MAR-93	Benzo(g,h,i)perylene	150.000	J	0	ug/kg
SF-SS-10	110317	0 - .5	19-MAR-93	Benzo(b)fluoranthene	240.000	J	0	ug/kg
SF-SS-10	110317	0 - .5	19-MAR-93	Benzo(a)pyrene	270.000	J	0	ug/kg
SF-SS-10	110317	0 - .5	19-MAR-93	Benzo(a)anthracene	250.000	J	0	ug/kg
SF-SS-11	110321	0 - .5	19-MAR-93	Benzo(a)pyrene	51.000	J	0	ug/kg
SF-SS-11	110321	0 - .5	19-MAR-93	bis(2-Ethylhexyl) phthalate	65.000	J	0	ug/kg

0497

5174

TABLE F-2A
(Continued)

SAMPLE LOCATION	SAMPLE ID	SAMPLE INTERVALS	SAMPLE DATE	PARAMETER	RESULTS	VAL QUAL	BACKGROUND	UNITS
SEMIVOLATILE ORGANICS (Continued)								
SF-SS-11	110321	0 - .5	19-MAR-93	Pyrene	64.000	J	0	ug/kg
SF-SS-11	110321	0 - .5	19-MAR-93	Fluoranthene	73.000	J	0	ug/kg
SF-SS-11	110321	0 - .5	19-MAR-93	Dimethyl phthalate	62.000	J	0	ug/kg
SF-SS-11	110321	0 - .5	19-MAR-93	Chrysene	60.000	J	0	ug/kg
SF-SS-11	110321	0 - .5	19-MAR-93	Benzo(k)fluoranthene	49.000	J	0	ug/kg
SF-SS-11	110321	0 - .5	19-MAR-93	Benzo(b)fluoranthene	46.000	J	0	ug/kg
SF-SS-11	110321	0 - .5	19-MAR-93	Benzo(g,h,i)perylene	53.000	J	0	ug/kg
SF-SS-16	110343	0 - .5	22-MAR-93	Anthracene	59.000	J	0	ug/kg
SF-SS-16	110343	0 - .5	22-MAR-93	Benzo(a)anthracene	160.000	J	0	ug/kg
SF-SS-16	110343	0 - .5	22-MAR-93	Fluoranthene	340.000	J	0	ug/kg
SF-SS-16	110343	0 - .5	22-MAR-93	Dibenzo(a,h)anthracene	43.000	J	0	ug/kg
SF-SS-16	110343	0 - .5	22-MAR-93	bis(2-Ethylhexyl) phthalate	95.000	J	0	ug/kg
SF-SS-16	110343	0 - .5	22-MAR-93	Pyrene	270.000	J	0	ug/kg
SF-SS-16	110343	0 - .5	22-MAR-93	Phenanthrene	200.000	J	0	ug/kg
SF-SS-16	110343	0 - .5	22-MAR-93	Indeno(1,2,3-cd)pyrene	110.000	J	0	ug/kg
SF-SS-16	110343	0 - .5	22-MAR-93	Chrysene	200.000	J	0	ug/kg
SF-SS-16	110343	0 - .5	22-MAR-93	Benzoic acid	78.000	J	0	ug/kg
SF-SS-16	110343	0 - .5	22-MAR-93	Benzo(k)fluoranthene	180.000	J	0	ug/kg
SF-SS-16	110343	0 - .5	22-MAR-93	Benzo(g,h,i)perylene	100.000	J	0	ug/kg
SF-SS-16	110343	0 - .5	22-MAR-93	Benzo(b)fluoranthene	160.000	J	0	ug/kg
SF-SS-16	110343	0 - .5	22-MAR-93	Benzo(a)pyrene	170.000	J	0	ug/kg
SF-SS-17	110297	0 - .5	18-MAR-93	Acenaphthene	140.000	J	0	ug/kg
SF-SS-17	110297	0 - .5	18-MAR-93	Fluoranthene	4300.000	-	0	ug/kg
SF-SS-17	110297	0 - .5	18-MAR-93	Dibenzofuran	130.000	J	0	ug/kg
SF-SS-17	110297	0 - .5	18-MAR-93	Dibenzo(a,h)anthracene	1100.000	-	0	ug/kg
SF-SS-17	110297	0 - .5	18-MAR-93	Chrysene	3200.000	-	0	ug/kg
SF-SS-17	110297	0 - .5	18-MAR-93	Carbazole	170.000	J	0	ug/kg
SF-SS-17	110297	0 - .5	18-MAR-93	Benzoic acid	52.000	J	0	ug/kg
SF-SS-17	110297	0 - .5	18-MAR-93	Benzo(k)fluoranthene	3300.000	-	0	ug/kg
SF-SS-17	110297	0 - .5	18-MAR-93	Benzo(g,h,i)perylene	3100.000	-	0	ug/kg
SF-SS-17	110297	0 - .5	18-MAR-93	Benzo(b)fluoranthene	3900.000	-	0	ug/kg
SF-SS-17	110297	0 - .5	18-MAR-93	bis(2-Ethylhexyl) phthalate	100.000	J	0	ug/kg
SF-SS-17	110297	0 - .5	18-MAR-93	Pyrene	3500.000	-	0	ug/kg
SF-SS-17	110297	0 - .5	18-MAR-93	Phenanthrene	2300.000	-	0	ug/kg
SF-SS-17	110297	0 - .5	18-MAR-93	Indeno(1,2,3-cd)pyrene	3000.000	-	0	ug/kg
SF-SS-17	110297	0 - .5	18-MAR-93	Fluorene	220.000	J	0	ug/kg
SF-SS-17	110297	0 - .5	18-MAR-93	Benzo(a)pyrene	4700.000	-	0	ug/kg
SF-SS-17	110297	0 - .5	18-MAR-93	Benzo(a)anthracene	2500.000	-	0	ug/kg
SF-SS-17	110297	0 - .5	18-MAR-93	Acenaphthylene	590.000	-	0	ug/kg
SF-SS-17	110297	0 - .5	18-MAR-93	Anthracene	560.000	-	0	ug/kg
SF-SS-18	110287	0 - .5	18-MAR-93	Acenaphthylene	120.000	J	0	ug/kg
SF-SS-18	110287	0 - .5	18-MAR-93	Anthracene	110.000	J	0	ug/kg
SF-SS-18	110287	0 - .5	18-MAR-93	Benzo(a)pyrene	750.000	-	0	ug/kg

TABLE F-2A
(Continued)

SAMPLE LOCATION	SAMPLE ID	SAMPLE INTERVALS	SAMPLE DATE	PARAMETER	RESULTS	VAL QUAL	BACKGROUND	UNITS
SEMIVOLATILE ORGANICS (Continued)								
SF-SS-18	110287	0 - .5	18-MAR-93	Benzo(a)anthracene	530.000	-	0	ug/kg
SF-SS-18	110287	0 - .5	18-MAR-93	bis(2-Ethylhexyl) phthalate	72.000	J	0	ug/kg
SF-SS-18	110287	0 - .5	18-MAR-93	Pyrene	850.000	-	0	ug/kg
SF-SS-18	110287	0 - .5	18-MAR-93	Phenanthrene	400.000	-	0	ug/kg
SF-SS-18	110287	0 - .5	18-MAR-93	Indeno(1,2,3-cd)pyrene	520.000	-	0	ug/kg
SF-SS-18	110287	0 - .5	18-MAR-93	Fluoranthene	1100.000	-	0	ug/kg
SF-SS-18	110287	0 - .5	18-MAR-93	Dibenzo(a,h)anthracene	180.000	J	0	ug/kg
SF-SS-18	110287	0 - .5	18-MAR-93	Chrysene	670.000	-	0	ug/kg
SF-SS-18	110287	0 - .5	18-MAR-93	Carbazole	48.000	J	0	ug/kg
SF-SS-18	110287	0 - .5	18-MAR-93	Benzo(k)fluoranthene	670.000	-	0	ug/kg
SF-SS-18	110287	0 - .5	18-MAR-93	Benzo(g,h,i)perylene	560.000	-	0	ug/kg
SF-SS-18	110287	0 - .5	18-MAR-93	Benzo(b)fluoranthene	700.000	-	0	ug/kg
SF-SS-19	110365	0 - .5	22-MAR-93	Benzo(a)anthracene	54.000	J	0	ug/kg
SF-SS-19	110365	0 - .5	22-MAR-93	Benzo(k)fluoranthene	71.000	J	0	ug/kg
SF-SS-19	110365	0 - .5	22-MAR-93	Benzo(a)pyrene	59.000	J	0	ug/kg
SF-SS-19	110365	0 - .5	22-MAR-93	Benzo(g,h,i)perylene	62.000	J	0	ug/kg
SF-SS-19	110365	0 - .5	22-MAR-93	Benzo(b)fluoranthene	66.000	J	0	ug/kg
SF-SS-19	110365	0 - .5	22-MAR-93	bis(2-Ethylhexyl) phthalate	83.000	J	0	ug/kg
SF-SS-19	110365	0 - .5	22-MAR-93	Pyrene	80.000	J	0	ug/kg
SF-SS-19	110365	0 - .5	22-MAR-93	Indeno(1,2,3-cd)pyrene	51.000	J	0	ug/kg
SF-SS-19	110365	0 - .5	22-MAR-93	Fluoranthene	87.000	J	0	ug/kg
SF-SS-19	110365	0 - .5	22-MAR-93	Chrysene	77.000	J	0	ug/kg
SF-SS-19	110365	0 - .5	22-MAR-93	Benzoic acid	72.000	J	0	ug/kg
SF-SS-20	110290	0 - .5	19-MAR-93	Benzo(a)anthracene	46.000	J	0	ug/kg
SF-SS-20	110290	0 - .5	19-MAR-93	Benzo(g,h,i)perylene	79.000	J	0	ug/kg
SF-SS-20	110290	0 - .5	19-MAR-93	Benzo(a)pyrene	79.000	J	0	ug/kg
SF-SS-20	110290	0 - .5	19-MAR-93	Benzo(b)fluoranthene	65.000	J	0	ug/kg
SF-SS-20	110290	0 - .5	19-MAR-93	Chrysene	65.000	J	0	ug/kg
SF-SS-20	110290	0 - .5	19-MAR-93	bis(2-Ethylhexyl) phthalate	71.000	J	0	ug/kg
SF-SS-20	110290	0 - .5	19-MAR-93	Pyrene	62.000	J	0	ug/kg
SF-SS-20	110290	0 - .5	19-MAR-93	Indeno(1,2,3-cd)pyrene	45.000	J	0	ug/kg
SF-SS-20	110290	0 - .5	19-MAR-93	Fluoranthene	68.000	J	0	ug/kg
SF-SS-20	110290	0 - .5	19-MAR-93	Benzo(k)fluoranthene	57.000	J	0	ug/kg
PESTICIDES/PCBS								
1972	110378	0 - .5	19-MAR-93	Dieldrin	9.700	-	0	ug/kg
1976	110340	0 - .5	22-MAR-93	Endrin ketone	5.900	J	0	ug/kg
1977	110304	0 - .5	19-MAR-93	Aroclor-1254	89.000	-	0	ug/kg
SF-SS-18	110287	0 - .5	18-MAR-93	Aroclor-1260	38.000	J	0	ug/kg
SF-SS-19	110365	0 - .5	22-MAR-93	Aroclor-1260	52.000	-	0	ug/kg

0499

5174

TABLE F-2B

SOUTH FIELD
CONCENTRATIONS OF DETECTED ANALYTES
ABOVE BACKGROUND IN SUBSURFACE SOIL
PHASE I FIELD INVESTIGATION
OPERABLE UNIT 2 REMEDIAL INVESTIGATION
FERNALD ENVIRONMENTAL MANAGEMENT PROJECT

SAMPLE LOCATION	SAMPLE ID	SAMPLE INTERVALS	SAMPLE DATE	PARAMETER	RESULTS	VAL QUAL	BACKGROUND	UNITS
METALS								
1456	055906	3.75 - 3.75	05-NOV-89	Beryllium	1.500	-	.62	mg/kg
1456	055906	3.75 - 3.75	05-NOV-89	Cadmium	4.400	-	.91	mg/kg
1456	055906	3.75 - 3.75	05-NOV-89	Chromium	24.900	-	20.953	mg/kg
1456	055906	3.75 - 3.75	05-NOV-89	Copper	21.700	-	20.23	mg/kg
1456	055906	3.75 - 3.75	05-NOV-89	Silver	2.200	-	0	mg/kg
1456	055906	3.75 - 3.75	05-NOV-89	Nickel	39.500	-	34.747	mg/kg
1456	055906	3.75 - 3.75	05-NOV-89	Lead	19.200	-	15.78	mg/kg
1456	055906	3.75 - 3.75	05-NOV-89	Cobalt	19.100	-	15.929	mg/kg
1459	055919	5 - 5	06-NOV-89	Beryllium	1.400	-	.62	mg/kg
1459	055919	5 - 5	06-NOV-89	Lead	34.000	-	15.78	mg/kg
1459	055919	5 - 5	06-NOV-89	Cadmium	4.100	-	.91	mg/kg
1459	055919	5 - 5	06-NOV-89	Copper	24.300	-	20.23	mg/kg
1459	055919	5 - 5	06-NOV-89	Chromium	23.800	-	20.953	mg/kg
1462	055932	4 - 4	07-NOV-89	Cadmium	4.600	-	.91	mg/kg
1462	055932	4 - 4	07-NOV-89	Chromium	24.000	-	20.953	mg/kg
1465	055945	3.5 - 3.5	08-NOV-89	Barium	198.000	-	121.064	mg/kg
1465	055945	3.5 - 3.5	08-NOV-89	Cadmium	4.500	-	.91	mg/kg
1465	055945	3.5 - 3.5	08-NOV-89	Nickel	38.000	-	34.747	mg/kg
1465	055945	3.5 - 3.5	08-NOV-89	Lead	20.900	-	15.78	mg/kg
1465	055945	3.5 - 3.5	08-NOV-89	Chromium	25.300	-	20.953	mg/kg
1465	055945	3.5 - 3.5	08-NOV-89	Beryllium	1.300	-	.62	mg/kg
1468	055959	2.5 - 2.5	14-NOV-89	Beryllium	1.600	-	.62	mg/kg
1468	055959	2.5 - 2.5	14-NOV-89	Cadmium	3.000	-	.91	mg/kg
1468	055959	2.5 - 2.5	14-NOV-89	Sodium	235.000	-	227.947	mg/kg
1468	055959	2.5 - 2.5	14-NOV-89	Lead	21.000	-	15.78	mg/kg
1468	055959	2.5 - 2.5	14-NOV-89	Chromium	21.300	-	20.953	mg/kg
1471	055972	4 - 4	16-NOV-89	Cadmium	3.100	-	.91	mg/kg
1471	055972	4 - 4	16-NOV-89	Silver	1.800	-	0	mg/kg
1471	055972	4 - 4	16-NOV-89	Nickel	36.400	-	34.747	mg/kg
1792	067343	1.5 - 3	21-AUG-91	Antimony	7.800	J	0	mg/kg
1792	067343	1.5 - 3	21-AUG-91	Beryllium	1.000	-	.62	mg/kg
1792	067343	1.5 - 3	21-AUG-91	Silver	2.200	-	0	mg/kg
1792	067343	1.5 - 3	21-AUG-91	Molybdenum	15.800	-	.27	mg/kg
1792	067343	1.5 - 3	21-AUG-91	Copper	20.300	-	20.23	mg/kg
1792	067343	1.5 - 3	21-AUG-91	Chromium	21.000	-	20.953	mg/kg
1792	067343	1.5 - 3	21-AUG-91	Barium	123.000	-	121.064	mg/kg

TABLE F-2B
(Continued)

SAMPLE LOCATION	SAMPLE ID	SAMPLE INTERVALS	SAMPLE DATE	PARAMETER	RESULTS	VAL QUAL	BACKGROUND	UNITS
METALS (Continued)								
1792	067346	6 - 7.5	21-AUG-91	Antimony	29.700	J	0	mg/kg
1792	067346	6 - 7.5	21-AUG-91	Cadmium	4.900	J	.91	mg/kg
1792	067346	6 - 7.5	21-AUG-91	Beryllium	.800	-	.62	mg/kg
1792	067346	6 - 7.5	21-AUG-91	Calcium	165000.000	-	150000	mg/kg
1792	067346	6 - 7.5	21-AUG-91	Molybdenum	13.000	J	.27	mg/kg
1792	067346	6 - 7.5	21-AUG-91	Chromium	27.300	-	20.953	mg/kg
1792	067346	6 - 7.5	21-AUG-91	Silver	16.200	-	0	mg/kg
1792	067350	12 - 13.5	21-AUG-91	Antimony	21.400	J	0	mg/kg
1792	067350	12 - 13.5	21-AUG-91	Beryllium	.850	-	.62	mg/kg
1792	067350	12 - 13.5	21-AUG-91	Lead	1140.000	-	15.78	mg/kg
1792	067350	12 - 13.5	21-AUG-91	Silver	13.200	J	0	mg/kg
1792	067350	12 - 13.5	21-AUG-91	Molybdenum	13.400	J	.27	mg/kg
1792	067350	12 - 13.5	21-AUG-91	Chromium	31.900	-	20.953	mg/kg
1792	067350	12 - 13.5	21-AUG-91	Cadmium	3.200	J	.91	mg/kg
1792	067353	16.5 - 18	22-AUG-91	Antimony	18.700	J	0	mg/kg
1792	067353	16.5 - 18	22-AUG-91	Silver	13.300	J	0	mg/kg
1792	067353	16.5 - 18	22-AUG-91	Molybdenum	14.100	J	.27	mg/kg
1792	067353	16.5 - 18	22-AUG-91	Lead	17.100	-	15.78	mg/kg
1792	067353	16.5 - 18	22-AUG-91	Chromium	29.100	-	20.953	mg/kg
1792	067353	16.5 - 18	22-AUG-91	Cadmium	2.900	J	.91	mg/kg
1792	067353	16.5 - 18	22-AUG-91	Beryllium	.930	-	.62	mg/kg
1792	067356	21.5 - 23	22-AUG-91	Antimony	13.800	J	0	mg/kg
1792	067356	21.5 - 23	22-AUG-91	Silver	9.400	-	0	mg/kg
1792	067356	21.5 - 23	22-AUG-91	Molybdenum	14.800	-	.27	mg/kg
1792	067356	21.5 - 23	22-AUG-91	Lead	16.400	-	15.78	mg/kg
1792	067356	21.5 - 23	22-AUG-91	Copper	21.500	-	20.23	mg/kg
1792	067356	21.5 - 23	22-AUG-91	Beryllium	.970	-	.62	mg/kg
1792	067356	21.5 - 23	22-AUG-91	Chromium	27.200	-	20.953	mg/kg
1792	067356	21.5 - 23	22-AUG-91	Cadmium	1.800	J	.91	mg/kg
1793	067333	3 - 4.5	15-AUG-91	Beryllium	.990	-	.62	mg/kg
1793	067333	3 - 4.5	15-AUG-91	Silver	4.700	-	0	mg/kg
1793	067333	3 - 4.5	15-AUG-91	Molybdenum	14.600	-	.27	mg/kg
1793	067333	3 - 4.5	15-AUG-91	Lead	16.100	-	15.78	mg/kg
1793	067333	3 - 4.5	15-AUG-91	Copper	21.300	-	20.23	mg/kg
1793	067333	3 - 4.5	15-AUG-91	Chromium	22.900	-	20.953	mg/kg
1794	067324	0 - 1	13-AUG-91	Antimony	14.900	J	0	mg/kg
1794	067324	0 - 1	13-AUG-91	Barium	173.000	-	121.064	mg/kg
1794	067324	0 - 1	13-AUG-91	Lead	18.200	-	15.78	mg/kg
1794	067324	0 - 1	13-AUG-91	Silver	8.600	-	0	mg/kg
1794	067324	0 - 1	13-AUG-91	Molybdenum	14.900	-	.27	mg/kg
1794	067324	0 - 1	13-AUG-91	Sodium	522.000	-	227.947	mg/kg
1794	067324	0 - 1	13-AUG-91	Manganese	1060.000	-	1045.407	mg/kg
1794	067324	0 - 1	13-AUG-91	Copper	26.800	-	20.23	mg/kg

0501

5174

TABLE F-2B
(Continued)

SAMPLE LOCATION	SAMPLE ID	SAMPLE INTERVALS	SAMPLE DATE	PARAMETER	RESULTS	VAL QUAL	BACKGROUND	UNITS
METALS (Continued)								
1794	067324	0 - 1	13-AUG-91	Cobalt	23.200	-	15.929	mg/kg
1794	067324	0 - 1	13-AUG-91	Chromium	25.800	-	20.953	mg/kg
1794	067324	0 - 1	13-AUG-91	Cadmium	1.700	J	.91	mg/kg
1794	067324	0 - 1	13-AUG-91	Beryllium	1.100	-	.62	mg/kg
1794	067328	2 - 2.5	13-AUG-91	Antimony	22.300	J	0	mg/kg
1794	067328	2 - 2.5	13-AUG-91	Silver	13.200	-	0	mg/kg
1794	067328	2 - 2.5	13-AUG-91	Molybdenum	12.300	-	.27	mg/kg
1794	067328	2 - 2.5	13-AUG-91	Mercury	.310	-	.29	mg/kg
1794	067328	2 - 2.5	13-AUG-91	Chromium	26.900	-	20.953	mg/kg
1794	067328	2 - 2.5	13-AUG-91	Cadmium	3.400	J	.91	mg/kg
1794	067328	2 - 2.5	13-AUG-91	Beryllium	.870	-	.62	mg/kg
1795	067367	0 - 1	23-AUG-91	Antimony	10.200	J	0	mg/kg
1795	067367	0 - 1	23-AUG-91	Cadmium	1.500	J	.91	mg/kg
1795	067367	0 - 1	23-AUG-91	Beryllium	.770	-	.62	mg/kg
1795	067367	0 - 1	23-AUG-91	Chromium	24.700	-	20.953	mg/kg
1795	067367	0 - 1	23-AUG-91	Silver	8.000	-	0	mg/kg
1795	067367	0 - 1	23-AUG-91	Silver	.080	-	0	mg/L
1795	067367	0 - 1	23-AUG-91	Silicon	1530.000	J	1069.496	mg/kg
1795	067367	0 - 1	23-AUG-91	Selenium	.129	-	0	mg/L
1795	067367	0 - 1	23-AUG-91	Molybdenum	14.500	-	.27	mg/kg
1795	067370	3 - 4	23-AUG-91	Antimony	7.900	J	0	mg/kg
1795	067370	3 - 4	23-AUG-91	Barium	159.000	-	121.064	mg/kg
1795	067370	3 - 4	23-AUG-91	Cyanide	2.600	-	.17	mg/kg
1795	067370	3 - 4	23-AUG-91	Silver	2.500	-	0	mg/kg
1795	067370	3 - 4	23-AUG-91	Copper	21.300	-	20.23	mg/kg
1795	067370	3 - 4	23-AUG-91	Molybdenum	15.500	-	.27	mg/kg
1795	067370	3 - 4	23-AUG-91	Beryllium	.820	-	.62	mg/kg
SPA-5	039180	- 5	29-JUL-92	Molybdenum	3.400	-	.27	mg/kg
SPC-5	039179	- 5	30-JUL-92	Molybdenum	4.400	-	.27	mg/kg
RADIONUCLIDES								
1014	007354	1.5 - 3	17-OCT-87	TH-230	2.000	-	1.897	pCi/g
1014	007354	1.5 - 3	17-OCT-87	U-234	1.400	-	1.034	pCi/g
1014	007354	1.5 - 3	17-OCT-87	U-238	1.400	-	1.122	pCi/g
1046	008014	0 - 1.5	06-FEB-88	U-234	1.700	-	1.034	pCi/g
1046	008014	0 - 1.5	06-FEB-88	U-238	2.100	-	1.122	pCi/g
1407	098001	.5 - 1	16-MAY-89	U-TOTAL	6.000	-	2.54	mg/kg
1407	098002	1.5 - 2	16-MAY-89	U-TOTAL	5.000	-	2.54	mg/kg
1407	098003	3 - 3.5	16-MAY-89	U-TOTAL	3.000	-	2.54	mg/kg
1407	098004	4.5 - 5	16-MAY-89	U-TOTAL	4.000	-	2.54	mg/kg
1407	098008	7.5 - 8	16-MAY-89	U-TOTAL	5.000	-	2.54	mg/kg
1433	047019	2 - 5	29-JUL-92	RA-226	7.670	-	1.47	pCi/g
1433	047019	2 - 5	29-JUL-92	TH-228	20.300	J	1.341	pCi/g

TABLE F-2B
(Continued)

SAMPLE LOCATION	SAMPLE ID	SAMPLE INTERVALS	SAMPLE DATE	PARAMETER	RESULTS	VAL QUAL	BACKGROUND	UNITS
RADIONUCLIDES (Continued)								
1433	047019	2 - 5	29-JUL-92	U-238	41.300	J	1.122	pCi/g
1433	047019	2 - 5	29-JUL-92	U-235/236	2.240	J	.142	pCi/g
1433	047019	2 - 5	29-JUL-92	U-TOTAL	128.000	-	2.54	mg/kg
1433	047019	2 - 5	29-JUL-92	TH-TOTAL	158.000	J	9.47	mg/kg
1433	047019	2 - 5	29-JUL-92	U-234	41.200	J	1.034	pCi/g
1433	047019	2 - 5	29-JUL-92	TH-232	17.500	J	1.269	pCi/g
1433	047019	2 - 5	29-JUL-92	TH-230	5.860	J	1.897	pCi/g
1433	047019	2 - 5	29-JUL-92	SR-90	1.910	-	.56	pCi/g
1433	047019	2 - 5	29-JUL-92	RA-228	19.000	-	1.325	pCi/g
1455	055900	- 3	04-NOV-89	RA-226	5.930	J	1.47	pCi/g
1455	055900	- 3	04-NOV-89	U-TOTAL	42.600	J	2.54	mg/kg
1455	055900	- 3	04-NOV-89	U-238	14.600	-	1.122	pCi/g
1455	055900	- 3	04-NOV-89	U-235/236	.748	-	.142	pCi/g
1455	055900	- 3	04-NOV-89	U-234	12.600	-	1.034	pCi/g
1455	055900	- 3	04-NOV-89	TH-TOTAL	11.600	-	9.47	mg/kg
1455	055900	- 3	04-NOV-89	TH-232	1.290	-	1.269	pCi/g
1455	055900	- 3	04-NOV-89	TH-230	10.300	J	1.897	pCi/g
1455	055900	- 3	04-NOV-89	TH-228	1.520	J	1.341	pCi/g
1455	055901	- 3.75	04-NOV-89	RA-228	1.580	J	1.325	pCi/g
1455	055901	- 3.75	04-NOV-89	TH-TOTAL	10.700	-	9.47	mg/kg
1455	055901	- 3.75	04-NOV-89	U-234	2.440	-	1.034	pCi/g
1455	055901	- 3.75	04-NOV-89	U-TOTAL	10.300	J	2.54	mg/kg
1455	055901	- 3.75	04-NOV-89	U-238	3.100	-	1.122	pCi/g
1455	055901	- 3.75	04-NOV-89	TH-228	1.420	J	1.341	pCi/g
1455	055901	- 3.75	04-NOV-89	TH-230	2.120	J	1.897	pCi/g
1456	055902	- 3.75	04-NOV-89	PU-239/240	1.230	-	0	pCi/g
1456	055902	- 3.75	04-NOV-89	U-234	9.360	-	1.034	pCi/g
1456	055902	- 3.75	04-NOV-89	U-235/236	.665	-	.142	pCi/g
1456	055902	- 3.75	04-NOV-89	U-TOTAL	27.700	J	2.54	mg/kg
1456	055902	- 3.75	04-NOV-89	U-238	10.600	-	1.122	pCi/g
1456	055903	- 4.25	04-NOV-89	U-234	22.100	-	1.034	pCi/g
1456	055903	- 4.25	04-NOV-89	U-235/236	1.120	-	.142	pCi/g
1456	055903	- 4.25	04-NOV-89	U-238	22.600	-	1.122	pCi/g
1457	055904	- 3.75	04-NOV-89	RA-226	15.700	J	1.47	pCi/g
1457	055904	- 3.75	04-NOV-89	RA-228	2.460	J	1.325	pCi/g
1457	055904	- 3.75	04-NOV-89	U-TOTAL	71.400	J	2.54	mg/kg
1457	055904	- 3.75	04-NOV-89	U-238	28.100	-	1.122	pCi/g
1457	055904	- 3.75	04-NOV-89	U-235/236	1.660	-	.142	pCi/g
1457	055904	- 3.75	04-NOV-89	U-234	26.400	-	1.034	pCi/g
1457	055904	- 3.75	04-NOV-89	TH-TOTAL	31.000	-	9.47	mg/kg
1457	055904	- 3.75	04-NOV-89	TH-232	3.440	-	1.269	pCi/g
1457	055904	- 3.75	04-NOV-89	TH-230	57.300	J	1.897	pCi/g
1457	055904	- 3.75	04-NOV-89	TH-228	2.630	J	1.341	pCi/g

TABLE F-2B
(Continued)

SAMPLE LOCATION	SAMPLE ID	SAMPLE INTERVALS	SAMPLE DATE	PARAMETER	RESULTS	VAL QUAL	BACKGROUND	UNITS
RADIONUCLIDES (Continued)								
1457	055905	4.25 - 4.45	04-NOV-89	RA-228	1.560	J	1.325	pCi/g
1457	055905	4.25 - 4.45	04-NOV-89	U-234	4.060	-	1.034	pCi/g
1457	055905	4.25 - 4.45	04-NOV-89	TH-TOTAL	11.600	-	9.47	mg/kg
1457	055905	4.25 - 4.45	04-NOV-89	TH-232	1.290	-	1.269	pCi/g
1457	055905	4.25 - 4.45	04-NOV-89	U-TOTAL	11.900	J	2.54	mg/kg
1457	055905	4.25 - 4.45	04-NOV-89	U-238	4.410	-	1.122	pCi/g
1457	055905	4.25 - 4.45	04-NOV-89	TH-230	2.160	J	1.897	pCi/g
1458	055913	3.8 - 3.9	06-NOV-89	RA-226	1.480	J	1.47	pCi/g
1458	055913	3.8 - 3.9	06-NOV-89	TH-228	1.780	J	1.341	pCi/g
1458	055913	3.8 - 3.9	06-NOV-89	U-TOTAL	76.100	J	2.54	mg/kg
1458	055913	3.8 - 3.9	06-NOV-89	U-238	23.700	-	1.122	pCi/g
1458	055913	3.8 - 3.9	06-NOV-89	U-235/236	1.580	-	.142	pCi/g
1458	055913	3.8 - 3.9	06-NOV-89	U-234	24.200	-	1.034	pCi/g
1458	055913	3.8 - 3.9	06-NOV-89	TH-TOTAL	15.700	-	9.47	mg/kg
1458	055913	3.8 - 3.9	06-NOV-89	TH-232	1.740	-	1.269	pCi/g
1458	055913	3.8 - 3.9	06-NOV-89	TH-230	3.180	J	1.897	pCi/g
1458	055914	4.5 - 4.6	06-NOV-89	RA-228	1.950	J	1.325	pCi/g
1458	055914	4.5 - 4.6	06-NOV-89	TH-228	2.060	J	1.341	pCi/g
1458	055914	4.5 - 4.6	06-NOV-89	U-TOTAL	59.800	J	2.54	mg/kg
1458	055914	4.5 - 4.6	06-NOV-89	U-238	23.600	-	1.122	pCi/g
1458	055914	4.5 - 4.6	06-NOV-89	U-235/236	1.180	-	.142	pCi/g
1458	055914	4.5 - 4.6	06-NOV-89	U-234	22.400	-	1.034	pCi/g
1458	055914	4.5 - 4.6	06-NOV-89	TH-TOTAL	16.900	-	9.47	mg/kg
1458	055914	4.5 - 4.6	06-NOV-89	TH-232	1.870	-	1.269	pCi/g
1458	055914	4.5 - 4.6	06-NOV-89	TH-230	4.410	J	1.897	pCi/g
1459	055915	5 - 5.1	06-NOV-89	RA-226	1.600	J	1.47	pCi/g
1459	055915	5 - 5.1	06-NOV-89	RA-228	1.370	J	1.325	pCi/g
1459	055915	5 - 5.1	06-NOV-89	U-TOTAL	228.000	J	2.54	mg/kg
1459	055915	5 - 5.1	06-NOV-89	U-238	82.700	-	1.122	pCi/g
1459	055915	5 - 5.1	06-NOV-89	U-235/236	4.050	-	.142	pCi/g
1459	055915	5 - 5.1	06-NOV-89	U-234	78.300	-	1.034	pCi/g
1459	055915	5 - 5.1	06-NOV-89	TH-TOTAL	11.800	-	9.47	mg/kg
1459	055915	5 - 5.1	06-NOV-89	TH-232	1.310	-	1.269	pCi/g
1459	055915	5 - 5.1	06-NOV-89	TH-228	1.520	J	1.341	pCi/g
1459	055916	5.75 - 5.85	06-NOV-89	TH-228	1.620	J	1.341	pCi/g
1459	055916	5.75 - 5.85	06-NOV-89	TH-230	2.160	J	1.897	pCi/g
1459	055916	5.75 - 5.85	06-NOV-89	TH-TOTAL	12.000	-	9.47	mg/kg
1459	055916	5.75 - 5.85	06-NOV-89	U-234	57.200	-	1.034	pCi/g
1459	055916	5.75 - 5.85	06-NOV-89	U-TOTAL	189.000	J	2.54	mg/kg
1459	055916	5.75 - 5.85	06-NOV-89	U-238	60.800	-	1.122	pCi/g
1459	055916	5.75 - 5.85	06-NOV-89	U-235/236	2.730	-	.142	pCi/g
1459	055916	5.75 - 5.85	06-NOV-89	TH-232	1.330	-	1.269	pCi/g
1460	055917	3.5 - 3.6	06-NOV-89	U-234	119.000	-	1.034	pCi/g

TABLE F-2B
(Continued)

SAMPLE LOCATION	SAMPLE ID	SAMPLE INTERVALS	SAMPLE DATE	PARAMETER	RESULTS	VAL QUAL	BACKGROUND	UNITS
RADIONUCLIDES (Continued)								
1460	055917	3.5 - 3.6	06-NOV-89	U-235/236	20.600	-	.142	pCi/g
1460	055917	3.5 - 3.6	06-NOV-89	U-238	131.000	-	1.122	pCi/g
1460	055917	3.5 - 3.6	06-NOV-89	U-TOTAL	394.000	J	2.54	mg/kg
1460	055918	4.25 - 4.45	06-NOV-89	TH-230	3.220	J	1.897	pCi/g
1460	055918	4.25 - 4.45	06-NOV-89	U-235/236	3.770	-	.142	pCi/g
1460	055918	4.25 - 4.45	06-NOV-89	U-234	75.700	-	1.034	pCi/g
1460	055918	4.25 - 4.45	06-NOV-89	U-TOTAL	230.000	J	2.54	mg/kg
1460	055918	4.25 - 4.45	06-NOV-89	U-238	78.800	-	1.122	pCi/g
1460	055918	4.25 - 4.45	06-NOV-89	TH-TOTAL	10.100	-	9.47	mg/kg
1461	055926	4 - 4.2	07-NOV-89	TH-230	4.120	J	1.897	pCi/g
1461	055926	4 - 4.2	07-NOV-89	U-TOTAL	19.100	J	2.54	mg/kg
1461	055926	4 - 4.2	07-NOV-89	U-238	5.580	-	1.122	pCi/g
1461	055926	4 - 4.2	07-NOV-89	U-234	4.730	-	1.034	pCi/g
1461	055927	5 - 5.2	07-NOV-89	RA-226	1.650	J	1.47	pCi/g
1461	055927	5 - 5.2	07-NOV-89	TH-230	2.130	J	1.897	pCi/g
1461	055927	5 - 5.2	07-NOV-89	TH-228	1.720	J	1.341	pCi/g
1461	055927	5 - 5.2	07-NOV-89	TH-232	1.400	-	1.269	pCi/g
1461	055927	5 - 5.2	07-NOV-89	U-234	1.490	-	1.034	pCi/g
1461	055927	5 - 5.2	07-NOV-89	U-TOTAL	5.170	J	2.54	mg/kg
1461	055927	5 - 5.2	07-NOV-89	U-238	1.420	-	1.122	pCi/g
1461	055927	5 - 5.2	07-NOV-89	TH-TOTAL	12.600	-	9.47	mg/kg
1461	055927	5 - 5.2	07-NOV-89	RA-228	1.410	J	1.325	pCi/g
1462	055928	4 - 4.2	07-NOV-89	TH-230	3.330	J	1.897	pCi/g
1462	055928	4 - 4.2	07-NOV-89	U-TOTAL	19.400	J	2.54	mg/kg
1462	055928	4 - 4.2	07-NOV-89	U-234	5.040	-	1.034	pCi/g
1462	055928	4 - 4.2	07-NOV-89	U-238	6.210	-	1.122	pCi/g
1462	055929	5 - 5.2	07-NOV-89	RA-228	1.370	J	1.325	pCi/g
1462	055929	5 - 5.2	07-NOV-89	U-TOTAL	14.800	J	2.54	mg/kg
1462	055929	5 - 5.2	07-NOV-89	U-238	4.700	-	1.122	pCi/g
1462	055929	5 - 5.2	07-NOV-89	U-234	4.710	-	1.034	pCi/g
1462	055929	5 - 5.2	07-NOV-89	TH-TOTAL	11.500	-	9.47	mg/kg
1462	055929	5 - 5.2	07-NOV-89	TH-232	1.270	-	1.269	pCi/g
1462	055929	5 - 5.2	07-NOV-89	TH-230	2.060	J	1.897	pCi/g
1463	055930	3.5 - 3.7	07-NOV-89	TH-228	5.320	J	1.341	pCi/g
1463	055930	3.5 - 3.7	07-NOV-89	U-TOTAL	121.000	-	2.54	mg/kg
1463	055930	3.5 - 3.7	07-NOV-89	U-238	61.400	-	1.122	pCi/g
1463	055930	3.5 - 3.7	07-NOV-89	U-235/236	2.550	J	.142	pCi/g
1463	055930	3.5 - 3.7	07-NOV-89	U-234	19.700	-	1.034	pCi/g
1463	055930	3.5 - 3.7	07-NOV-89	TH-230	4.390	J	1.897	pCi/g
1463	055931	4.5 - 4.7	07-NOV-89	RA-226	1.510	J	1.47	pCi/g
1463	055931	4.5 - 4.7	07-NOV-89	TH-TOTAL	10.400	-	9.47	mg/kg
1463	055931	4.5 - 4.7	07-NOV-89	TH-230	2.010	J	1.897	pCi/g
1463	055931	4.5 - 4.7	07-NOV-89	U-TOTAL	5.520	J	2.54	mg/kg

TABLE F-2B
(Continued)

SAMPLE LOCATION	SAMPLE ID	SAMPLE INTERVALS	SAMPLE DATE	PARAMETER	RESULTS	VAL QUAL	BACKGROUND	UNITS
RADIONUCLIDES (Continued)								
1463	055931	4.5 - 4.7	07-NOV-89	U-238	1.460	-	1.122	pCi/g
1463	055931	4.5 - 4.7	07-NOV-89	U-234	1.150	-	1.034	pCi/g
1464	055939	3.75 - 3.95	08-NOV-89	U-234	1.080	-	1.034	pCi/g
1464	055939	3.75 - 3.95	08-NOV-89	U-238	1.370	-	1.122	pCi/g
1464	055940	- 4.5	08-NOV-89	TH-228	1.480	J	1.341	pCi/g
1464	055940	- 4.5	08-NOV-89	U-234	1.960	-	1.034	pCi/g
1464	055940	- 4.5	08-NOV-89	TH-TOTAL	11.100	-	9.47	mg/kg
1464	055940	- 4.5	08-NOV-89	U-TOTAL	5.030	J	2.54	mg/kg
1464	055940	- 4.5	08-NOV-89	U-238	1.760	-	1.122	pCi/g
1465	055941	- 3.5	08-NOV-89	U-234	1.680	-	1.034	pCi/g
1465	055941	- 3.5	08-NOV-89	U-235/236	.757	J	.142	pCi/g
1465	055942	- 4.5	08-NOV-89	U-234	3.270	-	1.034	pCi/g
1465	055942	- 4.5	08-NOV-89	U-238	3.500	-	1.122	pCi/g
1465	055942	- 4.5	08-NOV-89	U-TOTAL	4.260	J	2.54	mg/kg
1466	055943	- 3	08-NOV-89	U-234	1.130	-	1.034	pCi/g
1466	055943	- 3	08-NOV-89	U-238	1.260	-	1.122	pCi/g
1466	055944	- 4.5	08-NOV-89	RA-226	1.560	J	1.47	pCi/g
1466	055944	- 4.5	08-NOV-89	TH-228	1.350	J	1.341	pCi/g
1466	055944	- 4.5	08-NOV-89	U-234	4.710	-	1.034	pCi/g
1466	055944	- 4.5	08-NOV-89	TH-TOTAL	10.300	-	9.47	mg/kg
1466	055944	- 4.5	08-NOV-89	U-238	5.360	-	1.122	pCi/g
1466	055944	- 4.5	08-NOV-89	U-TOTAL	4.720	J	2.54	mg/kg
1466	055944	- 4.5	08-NOV-89	RA-228	1.460	J	1.325	pCi/g
1466	055944	- 4.5	08-NOV-89	SR-90	.920	-	.56	pCi/g
1467	055952	- 2.5	14-NOV-89	U-234	3.820	J	1.034	pCi/g
1467	055952	- 2.5	14-NOV-89	U-238	4.140	J	1.122	pCi/g
1467	055952	- 2.5	14-NOV-89	U-TOTAL	11.380	-	2.54	mg/kg
1467	055953	- 3.5	14-NOV-89	RA-226	1.560	-	1.47	pCi/g
1467	055953	- 3.5	14-NOV-89	U-TOTAL	8.590	-	2.54	mg/kg
1467	055953	- 3.5	14-NOV-89	U-238	1.320	J	1.122	pCi/g
1467	055953	- 3.5	14-NOV-89	TH-TOTAL	10.600	J	9.47	mg/kg
1467	055953	- 3.5	14-NOV-89	TH-230	1.990	J	1.897	pCi/g
1467	055953	- 3.5	14-NOV-89	RA-228	1.350	-	1.325	pCi/g
1468	055954	- 2.5	14-NOV-89	U-234	3.420	J	1.034	pCi/g
1468	055954	- 2.5	14-NOV-89	U-238	3.560	J	1.122	pCi/g
1468	055954	- 2.5	14-NOV-89	U-TOTAL	12.260	J	2.54	mg/kg
1468	055955	- 3.5	14-NOV-89	RA-226	1.580	J	1.47	pCi/g
1468	055955	- 3.5	14-NOV-89	U-238	1.320	J	1.122	pCi/g
1468	055955	- 3.5	14-NOV-89	TH-TOTAL	10.200	J	9.47	mg/kg
1468	055955	- 3.5	14-NOV-89	U-234	1.310	J	1.034	pCi/g
1469	055956	- 2.5	14-NOV-89	U-234	2.590	J	1.034	pCi/g
1469	055956	- 2.5	14-NOV-89	U-TOTAL	10.890	J	2.54	mg/kg
1469	055956	- 2.5	14-NOV-89	U-238	3.180	J	1.122	pCi/g

TABLE F-2B
(Continued)

SAMPLE LOCATION	SAMPLE ID	SAMPLE INTERVALS	SAMPLE DATE	PARAMETER	RESULTS	VAL QUAL	BACKGROUND	UNITS
RADIONUCLIDES (Continued)								
1469	055957	- 3.5	14-NOV-89	RA-228	1.390	J	1.325	pCi/g
1469	055957	- 3.5	14-NOV-89	U-TOTAL	4.960	J	2.54	mg/kg
1469	055957	- 3.5	14-NOV-89	U-238	1.380	J	1.122	pCi/g
1469	055957	- 3.5	14-NOV-89	U-234	1.140	J	1.034	pCi/g
1470	055966	- 3	15-NOV-89	TH-230	1.940	-	1.897	pCi/g
1470	055966	- 3	15-NOV-89	TH-TOTAL	9.700	-	9.47	mg/kg
1470	055966	- 3	15-NOV-89	U-234	3.790	-	1.034	pCi/g
1470	055966	- 3	15-NOV-89	U-238	4.040	-	1.122	pCi/g
1470	055966	- 3	15-NOV-89	U-TOTAL	11.600	-	2.54	mg/kg
1470	055967	- 4	15-NOV-89	SR-90	.660	J	.56	pCi/g
1470	055967	- 4	15-NOV-89	TC-99	.900	-	0	pCi/g
1470	055967	- 4	15-NOV-89	U-TOTAL	5.060	-	2.54	mg/kg
1470	055967	- 4	15-NOV-89	U-238	1.610	-	1.122	pCi/g
1470	055967	- 4	15-NOV-89	U-234	1.510	-	1.034	pCi/g
1471	055968	- 4	16-NOV-89	TC-99	.900	-	0	pCi/g
1471	055968	- 4	16-NOV-89	U-TOTAL	6.890	-	2.54	mg/kg
1471	055968	- 4	16-NOV-89	U-238	2.120	-	1.122	pCi/g
1471	055968	- 4	16-NOV-89	U-234	1.520	-	1.034	pCi/g
1471	055969	- 5.5	16-NOV-89	TH-230	1.900	-	1.897	pCi/g
1471	055969	- 5.5	16-NOV-89	U-TOTAL	5.240	-	2.54	mg/kg
1471	055969	- 5.5	16-NOV-89	U-238	1.350	-	1.122	pCi/g
1471	055969	- 5.5	16-NOV-89	U-234	1.040	-	1.034	pCi/g
1472	055970	- 4	16-NOV-89	TH-230	2.860	-	1.897	pCi/g
1472	055970	- 4	16-NOV-89	U-238	3.640	-	1.122	pCi/g
1472	055970	- 4	16-NOV-89	U-234	3.460	-	1.034	pCi/g
1472	055970	- 4	16-NOV-89	U-TOTAL	10.200	-	2.54	mg/kg
1472	055971	- 5	16-NOV-89	SR-90	1.100	J	.56	pCi/g
1472	055971	- 5	16-NOV-89	U-234	2.130	-	1.034	pCi/g
1472	055971	- 5	16-NOV-89	TH-TOTAL	9.490	-	9.47	mg/kg
1472	055971	- 5	16-NOV-89	U-TOTAL	9.900	-	2.54	mg/kg
1472	055971	- 5	16-NOV-89	U-238	2.060	-	1.122	pCi/g
1473	055979	- 3.5	17-NOV-89	TH-228	1.470	-	1.341	pCi/g
1473	055979	- 3.5	17-NOV-89	U-234	1.680	J	1.034	pCi/g
1473	055979	- 3.5	17-NOV-89	U-238	1.860	J	1.122	pCi/g
1473	055979	- 3.5	17-NOV-89	U-TOTAL	7.020	J	2.54	mg/kg
1473	055981	- 10	17-NOV-89	U-234	1.150	J	1.034	pCi/g
1474	055982	- 3.5	17-NOV-89	U-234	1.790	J	1.034	pCi/g
1474	055982	- 3.5	17-NOV-89	U-238	1.890	J	1.122	pCi/g
1474	055982	- 3.5	17-NOV-89	U-TOTAL	9.920	-	2.54	mg/kg
1474	055983	- 5	17-NOV-89	U-TOTAL	3.090	-	2.54	mg/kg
1474	055984	- 10	17-NOV-89	U-234	1.500	J	1.034	pCi/g
1474	055984	- 10	17-NOV-89	U-238	1.380	J	1.122	pCi/g
1475	055985	- 3.75	17-NOV-89	TH-230	2.840	-	1.897	pCi/g

0507

5174

TABLE F-2B
(Continued)

SAMPLE LOCATION	SAMPLE ID	SAMPLE INTERVALS	SAMPLE DATE	PARAMETER	RESULTS	VAL QUAL	BACKGROUND	UNITS
RADIONUCLIDES (Continued)								
1475	055985	- 3.75	17-NOV-89	U-234	1.850	J	1.034	pCi/g
1475	055985	- 3.75	17-NOV-89	U-238	2.100	J	1.122	pCi/g
1475	055985	- 3.75	17-NOV-89	U-TOTAL	8.280	-	2.54	mg/kg
1475	055986	- 5	17-NOV-89	TH-230	2.160	-	1.897	pCi/g
1475	055986	- 5	17-NOV-89	TH-TOTAL	9.720	-	9.47	mg/kg
1475	055986	- 5	17-NOV-89	U-TOTAL	3.290	-	2.54	mg/kg
1475	055987	- 10	17-NOV-89	U-234	1.040	J	1.034	pCi/g
1516	055371	0 - .5	19-MAY-90	NP-237	.600	J	0	pCi/g
1516	055371	0 - .5	19-MAY-90	U-238	7.000	J	1.122	pCi/g
1516	055371	0 - .5	19-MAY-90	U-235/236	.600	J	.142	pCi/g
1516	055371	0 - .5	19-MAY-90	U-234	4.640	J	1.034	pCi/g
1516	055371	0 - .5	19-MAY-90	TH-TOTAL	10.000	-	9.47	mg/kg
1516	055371	0 - .5	19-MAY-90	TH-230	5.590	-	1.897	pCi/g
1516	055371	0 - .5	19-MAY-90	TC-99	.900	J	0	pCi/g
1516	055371	0 - .5	19-MAY-90	PU-238	.600	J	0	pCi/g
1516	055371	0 - .5	19-MAY-90	PU-239/240	.600	J	0	pCi/g
1516	055373	1 - 1.5	19-MAY-90	NP-237	.600	J	0	pCi/g
1516	055373	1 - 1.5	19-MAY-90	TH-230	3.070	-	1.897	pCi/g
1516	055373	1 - 1.5	19-MAY-90	TC-99	.900	J	0	pCi/g
1516	055373	1 - 1.5	19-MAY-90	U-234	2.640	J	1.034	pCi/g
1516	055373	1 - 1.5	19-MAY-90	U-238	2.720	J	1.122	pCi/g
1516	055373	1 - 1.5	19-MAY-90	U-235/236	.600	J	.142	pCi/g
1516	055373	1 - 1.5	19-MAY-90	PU-239/240	.600	J	0	pCi/g
1516	055373	1 - 1.5	19-MAY-90	PU-238	.600	J	0	pCi/g
1516	055375	2 - 2.5	19-MAY-90	NP-237	.600	J	0	pCi/g
1516	055375	2 - 2.5	19-MAY-90	U-238	1.410	J	1.122	pCi/g
1516	055375	2 - 2.5	19-MAY-90	U-235/236	.600	J	.142	pCi/g
1516	055375	2 - 2.5	19-MAY-90	U-234	1.290	J	1.034	pCi/g
1516	055375	2 - 2.5	19-MAY-90	TC-99	.900	J	0	pCi/g
1516	055375	2 - 2.5	19-MAY-90	PU-239/240	.600	J	0	pCi/g
1516	055375	2 - 2.5	19-MAY-90	PU-238	.600	J	0	pCi/g
1516	055377	3 - 3.5	19-MAY-90	CS-137	.200	J	0	pCi/g
1516	055377	3 - 3.5	19-MAY-90	NP-237	.600	J	0	pCi/g
1516	055377	3 - 3.5	19-MAY-90	PU-238	.600	J	0	pCi/g
1516	055377	3 - 3.5	19-MAY-90	SR-90	1.220	J	.56	pCi/g
1516	055377	3 - 3.5	19-MAY-90	TC-99	.900	J	0	pCi/g
1516	055377	3 - 3.5	19-MAY-90	U-TOTAL	3.440	J	2.54	mg/kg
1516	055377	3 - 3.5	19-MAY-90	U-238	1.670	J	1.122	pCi/g
1516	055377	3 - 3.5	19-MAY-90	U-235/236	.600	J	.142	pCi/g
1516	055377	3 - 3.5	19-MAY-90	U-234	1.240	J	1.034	pCi/g
1516	055377	3 - 3.5	19-MAY-90	RU+106	1.000	J	0	pCi/g
1516	055377	3 - 3.5	19-MAY-90	PU-239/240	.600	J	0	pCi/g
1516	055379	4 - 4.5	19-MAY-90	NP-237	.600	J	0	pCi/g

TABLE F-2B
(Continued)

SAMPLE LOCATION	SAMPLE ID	SAMPLE INTERVALS	SAMPLE DATE	PARAMETER	RESULTS	VAL QUAL	BACKGROUND	UNITS
RADIONUCLIDES (Continued)								
1516	055379	4 - 4.5	19-MAY-90	U-238	1.930	J	1.122	pCi/g
1516	055379	4 - 4.5	19-MAY-90	U-235/236	.600	J	.142	pCi/g
1516	055379	4 - 4.5	19-MAY-90	U-234	1.730	J	1.034	pCi/g
1516	055379	4 - 4.5	19-MAY-90	TC-99	.900	J	0	pCi/g
1516	055379	4 - 4.5	19-MAY-90	PU-239/240	.600	J	0	pCi/g
1516	055379	4 - 4.5	19-MAY-90	PU-238	.600	J	0	pCi/g
1516	055383	6 - 6.5	19-MAY-90	CS-137	.200	J	0	pCi/g
1516	055383	6 - 6.5	19-MAY-90	U-TOTAL	9.420	J	2.54	mg/kg
1516	055383	6 - 6.5	19-MAY-90	U-238	2.840	J	1.122	pCi/g
1516	055383	6 - 6.5	19-MAY-90	U-235/236	.600	J	.142	pCi/g
1516	055383	6 - 6.5	19-MAY-90	U-234	2.290	J	1.034	pCi/g
1516	055383	6 - 6.5	19-MAY-90	TC-99	.900	J	0	pCi/g
1516	055383	6 - 6.5	19-MAY-90	RU-106	1.000	J	0	pCi/g
1516	055383	6 - 6.5	19-MAY-90	PU-239/240	.600	J	0	pCi/g
1516	055383	6 - 6.5	19-MAY-90	PU-238	.600	J	0	pCi/g
1516	055383	6 - 6.5	19-MAY-90	NP-237	.600	J	0	pCi/g
1516	055387	8 - 8.5	19-MAY-90	NP-237	.600	J	0	pCi/g
1516	055387	8 - 8.5	19-MAY-90	PU-239/240	.600	J	0	pCi/g
1516	055387	8 - 8.5	19-MAY-90	U-234	1.500	J	1.034	pCi/g
1516	055387	8 - 8.5	19-MAY-90	U-235/236	.600	J	.142	pCi/g
1516	055387	8 - 8.5	19-MAY-90	U-238	1.530	J	1.122	pCi/g
1516	055387	8 - 8.5	19-MAY-90	TC-99	.900	J	0	pCi/g
1516	055387	8 - 8.5	19-MAY-90	PU-238	.600	J	0	pCi/g
1516	055389	9 - 9.5	19-MAY-90	CS-137	.200	J	0	pCi/g
1516	055389	9 - 9.5	19-MAY-90	U-TOTAL	6.550	J	2.54	mg/kg
1516	055389	9 - 9.5	19-MAY-90	U-238	1.910	J	1.122	pCi/g
1516	055389	9 - 9.5	19-MAY-90	U-235/236	.600	J	.142	pCi/g
1516	055389	9 - 9.5	19-MAY-90	U-234	1.540	J	1.034	pCi/g
1516	055389	9 - 9.5	19-MAY-90	TC-99	.900	J	0	pCi/g
1516	055389	9 - 9.5	19-MAY-90	RU-106	1.000	J	0	pCi/g
1516	055389	9 - 9.5	19-MAY-90	PU-238	.600	J	0	pCi/g
1516	055389	9 - 9.5	19-MAY-90	PU-239/240	.600	J	0	pCi/g
1516	055389	9 - 9.5	19-MAY-90	NP-237	.600	J	0	pCi/g
1516	055391	10 - 10.5	19-MAY-90	NP-237	.600	J	0	pCi/g
1516	055391	10 - 10.5	19-MAY-90	PU-239/240	.600	J	0	pCi/g
1516	055391	10 - 10.5	19-MAY-90	PU-238	.600	J	0	pCi/g
1516	055391	10 - 10.5	19-MAY-90	U-234	1.480	J	1.034	pCi/g
1516	055391	10 - 10.5	19-MAY-90	U-238	1.530	J	1.122	pCi/g
1516	055391	10 - 10.5	19-MAY-90	U-235/236	.600	J	.142	pCi/g
1516	055391	10 - 10.5	19-MAY-90	TC-99	.900	J	0	pCi/g
1516	055393	11 - 11.5	19-MAY-90	CS-137	.200	J	0	pCi/g
1516	055393	11 - 11.5	19-MAY-90	NP-237	.600	J	0	pCi/g
1516	055393	11 - 11.5	19-MAY-90	U-TOTAL	5.520	J	2.54	mg/kg

TABLE F-2B
(Continued)

SAMPLE LOCATION	SAMPLE ID	SAMPLE INTERVALS	SAMPLE DATE	PARAMETER	RESULTS	VAL QUAL	BACKGROUND	UNITS
RADIONUCLIDES (Continued)								
1516	055393	11 - 11.5	19-MAY-90	U-238	1.840	J	1.122	pCi/g
1516	055393	11 - 11.5	19-MAY-90	U-235/236	.600	J	.142	pCi/g
1516	055393	11 - 11.5	19-MAY-90	U-234	1.650	J	1.034	pCi/g
1516	055393	11 - 11.5	19-MAY-90	TC-99	.900	J	0	pCi/g
1516	055393	11 - 11.5	19-MAY-90	RU-106	1.000	J	0	pCi/g
1516	055393	11 - 11.5	19-MAY-90	PU-239/240	.600	J	0	pCi/g
1516	055393	11 - 11.5	19-MAY-90	PU-238	.600	J	0	pCi/g
1516	055395	12 - 12.5	19-MAY-90	NP-237	.600	J	0	pCi/g
1516	055395	12 - 12.5	19-MAY-90	PU-239/240	.600	J	0	pCi/g
1516	055395	12 - 12.5	19-MAY-90	PU-238	.600	J	0	pCi/g
1516	055395	12 - 12.5	19-MAY-90	TC-99	.900	J	0	pCi/g
1516	055395	12 - 12.5	19-MAY-90	U-238	1.960	J	1.122	pCi/g
1516	055395	12 - 12.5	19-MAY-90	U-235/236	.600	J	.142	pCi/g
1516	055395	12 - 12.5	19-MAY-90	U-234	1.840	J	1.034	pCi/g
1516	055399	14 - 14.5	19-MAY-90	CS-137	.200	J	0	pCi/g
1516	055399	14 - 14.5	19-MAY-90	PU-239/240	.600	J	0	pCi/g
1516	055399	14 - 14.5	19-MAY-90	NP-237	.600	J	0	pCi/g
1516	055399	14 - 14.5	19-MAY-90	TC-99	.900	J	0	pCi/g
1516	055399	14 - 14.5	19-MAY-90	U-TOTAL	6.660	J	2.54	mg/kg
1516	055399	14 - 14.5	19-MAY-90	U-238	2.600	J	1.122	pCi/g
1516	055399	14 - 14.5	19-MAY-90	U-235/236	.600	J	.142	pCi/g
1516	055399	14 - 14.5	19-MAY-90	U-234	2.270	J	1.034	pCi/g
1516	055399	14 - 14.5	19-MAY-90	RU-106	1.000	J	0	pCi/g
1516	055399	14 - 14.5	19-MAY-90	PU-238	.600	J	0	pCi/g
1516	055401	15 - 15.5	19-MAY-90	NP-237	.600	J	0	pCi/g
1516	055401	15 - 15.5	19-MAY-90	PU-238	.600	J	0	pCi/g
1516	055401	15 - 15.5	19-MAY-90	U-238	1.800	J	1.122	pCi/g
1516	055401	15 - 15.5	19-MAY-90	U-235/236	.600	J	.142	pCi/g
1516	055401	15 - 15.5	19-MAY-90	U-234	1.630	J	1.034	pCi/g
1516	055401	15 - 15.5	19-MAY-90	TC-99	.900	J	0	pCi/g
1516	055401	15 - 15.5	19-MAY-90	PU-239/240	.600	J	0	pCi/g
1516	055405	17 - 17.5	19-MAY-90	CS-137	.200	J	0	pCi/g
1516	055405	17 - 17.5	19-MAY-90	PU-238	.600	J	0	pCi/g
1516	055405	17 - 17.5	19-MAY-90	NP-237	.600	J	0	pCi/g
1516	055405	17 - 17.5	19-MAY-90	RU-106	1.000	J	0	pCi/g
1516	055405	17 - 17.5	19-MAY-90	U-235/236	.600	J	.142	pCi/g
1516	055405	17 - 17.5	19-MAY-90	TC-99	.900	J	0	pCi/g
1516	055405	17 - 17.5	19-MAY-90	U-TOTAL	2.640	J	2.54	mg/kg
1516	055405	17 - 17.5	19-MAY-90	PU-239/240	.600	J	0	pCi/g
1516	055407	18 - 18.5	19-MAY-90	NP-237	.600	J	0	pCi/g
1516	055407	18 - 18.5	19-MAY-90	TC-99	.900	J	0	pCi/g
1516	055407	18 - 18.5	19-MAY-90	U-235/236	.600	J	.142	pCi/g
1516	055407	18 - 18.5	19-MAY-90	U-238	2.740	J	1.122	pCi/g

TABLE F-2B
(Continued)

SAMPLE LOCATION	SAMPLE ID	SAMPLE INTERVALS	SAMPLE DATE	PARAMETER	RESULTS	VAL QUAL	BACKGROUND	UNITS
RADIONUCLIDES (Continued)								
1516	055407	18 - 18.5	19-MAY-90	U-234	2.300	J	1.034	pCi/g
1516	055407	18 - 18.5	19-MAY-90	PU-239/240	.600	J	0	pCi/g
1516	055407	18 - 18.5	19-MAY-90	PU-238	.600	J	0	pCi/g
1516	055409	19 - 19.5	19-MAY-90	NP-237	.600	J	0	pCi/g
1516	055409	19 - 19.5	19-MAY-90	U-235/236	.600	J	.142	pCi/g
1516	055409	19 - 19.5	19-MAY-90	TC-99	.900	J	0	pCi/g
1516	055409	19 - 19.5	19-MAY-90	PU-239/240	.600	J	0	pCi/g
1516	055409	19 - 19.5	19-MAY-90	PU-238	.600	J	0	pCi/g
1517	055413	0 - .5	20-MAY-90	CS-137	.200	J	0	pCi/g
1517	055413	0 - .5	20-MAY-90	PU-239/240	.600	J	0	pCi/g
1517	055413	0 - .5	20-MAY-90	U-234	1.090	J	1.034	pCi/g
1517	055413	0 - .5	20-MAY-90	U-TOTAL	2.950	J	2.54	mg/kg
1517	055413	0 - .5	20-MAY-90	U-238	1.450	J	1.122	pCi/g
1517	055413	0 - .5	20-MAY-90	U-235/236	.600	J	.142	pCi/g
1517	055413	0 - .5	20-MAY-90	TC-99	.900	J	0	pCi/g
1517	055413	0 - .5	20-MAY-90	RU-106	1.000	J	0	pCi/g
1517	055413	0 - .5	20-MAY-90	NP-237	.600	J	0	pCi/g
1517	055413	0 - .5	20-MAY-90	PU-238	.600	J	0	pCi/g
1517	055416	1.5 - 2	20-MAY-90	NP-237	.600	J	0	pCi/g
1517	055416	1.5 - 2	20-MAY-90	PU-238	.600	J	0	pCi/g
1517	055416	1.5 - 2	20-MAY-90	U-235/236	.600	J	.142	pCi/g
1517	055416	1.5 - 2	20-MAY-90	TC-99	.900	J	0	pCi/g
1517	055416	1.5 - 2	20-MAY-90	PU-239/240	.600	J	0	pCi/g
1517	055419	3 - 3.5	20-MAY-90	NP-237	.600	J	0	pCi/g
1517	055419	3 - 3.5	20-MAY-90	PU-239/240	.600	J	0	pCi/g
1517	055419	3 - 3.5	20-MAY-90	PU-238	.600	J	0	pCi/g
1517	055419	3 - 3.5	20-MAY-90	U-235/236	.600	J	.142	pCi/g
1517	055419	3 - 3.5	20-MAY-90	TC-99	.900	J	0	pCi/g
1517	055422	4.5 - 5	20-MAY-90	NP-237	.600	J	0	pCi/g
1517	055422	4.5 - 5	20-MAY-90	PU-238	.600	J	0	pCi/g
1517	055422	4.5 - 5	20-MAY-90	U-235/236	.600	J	.142	pCi/g
1517	055422	4.5 - 5	20-MAY-90	TC-99	.900	J	0	pCi/g
1517	055422	4.5 - 5	20-MAY-90	PU-239/240	.600	J	0	pCi/g
1517	055425	6 - 6.5	20-MAY-90	CS-137	.200	J	0	pCi/g
1517	055425	6 - 6.5	20-MAY-90	U-235/236	.600	J	.142	pCi/g
1517	055425	6 - 6.5	20-MAY-90	TC-99	.900	J	0	pCi/g
1517	055425	6 - 6.5	20-MAY-90	RU-106	1.000	J	0	pCi/g
1517	055425	6 - 6.5	20-MAY-90	PU-239/240	.600	J	0	pCi/g
1517	055425	6 - 6.5	20-MAY-90	PU-238	.600	J	0	pCi/g
1517	055425	6 - 6.5	20-MAY-90	NP-237	.600	J	0	pCi/g
1517	055427	7 - 7.5	20-MAY-90	CS-137	.200	J	0	pCi/g
1517	055427	7 - 7.5	20-MAY-90	NP-237	.600	J	0	pCi/g
1517	055427	7 - 7.5	20-MAY-90	PU-239/240	.600	J	0	pCi/g

0514

5174

TABLE F-2B
(Continued)

SAMPLE LOCATION	SAMPLE ID	SAMPLE INTERVALS	SAMPLE DATE	PARAMETER	RESULTS	VAL QUAL	BACKGROUND	UNITS
RADIONUCLIDES (Continued)								
1517	055427	7 - 7.5	20-MAY-90	U-235/236	.600	J	.142	pCi/g
1517	055427	7 - 7.5	20-MAY-90	TC-99	.900	J	0	pCi/g
1517	055427	7 - 7.5	20-MAY-90	RU-106	1.000	J	0	pCi/g
1517	055427	7 - 7.5	20-MAY-90	PU-238	.600	J	0	pCi/g
1517	055429	8 - 8.5	20-MAY-90	CS-137	.200	J	0	pCi/g
1517	055429	8 - 8.5	20-MAY-90	NP-237	.600	J	0	pCi/g
1517	055429	8 - 8.5	20-MAY-90	U-235/236	.600	J	.142	pCi/g
1517	055429	8 - 8.5	20-MAY-90	U-234	1.430	J	1.034	pCi/g
1517	055429	8 - 8.5	20-MAY-90	TC-99	.900	J	0	pCi/g
1517	055429	8 - 8.5	20-MAY-90	RU-106	1.000	J	0	pCi/g
1517	055429	8 - 8.5	20-MAY-90	PU-239/240	.600	J	0	pCi/g
1517	055429	8 - 8.5	20-MAY-90	PU-238	.600	J	0	pCi/g
1517	055431	9 - 9.5	20-MAY-90	CS-137	.200	J	0	pCi/g
1517	055431	9 - 9.5	20-MAY-90	U-235/236	.600	J	.142	pCi/g
1517	055431	9 - 9.5	20-MAY-90	TC-99	.900	J	0	pCi/g
1517	055431	9 - 9.5	20-MAY-90	RU-106	1.000	J	0	pCi/g
1517	055431	9 - 9.5	20-MAY-90	PU-239/240	.600	J	0	pCi/g
1517	055431	9 - 9.5	20-MAY-90	PU-238	.600	J	0	pCi/g
1517	055431	9 - 9.5	20-MAY-90	NP-237	.600	J	0	pCi/g
1517	055433	10 - 10.5	20-MAY-90	CS-137	.200	J	0	pCi/g
1517	055433	10 - 10.5	20-MAY-90	NP-237	.600	J	0	pCi/g
1517	055433	10 - 10.5	20-MAY-90	SR-90	.737	J	.56	pCi/g
1517	055433	10 - 10.5	20-MAY-90	TC-99	.900	J	0	pCi/g
1517	055433	10 - 10.5	20-MAY-90	U-235/236	.600	J	.142	pCi/g
1517	055433	10 - 10.5	20-MAY-90	RU-106	1.000	J	0	pCi/g
1517	055433	10 - 10.5	20-MAY-90	PU-239/240	.600	J	0	pCi/g
1517	055433	10 - 10.5	20-MAY-90	PU-238	.600	J	0	pCi/g
1517	055437	12 - 12.5	20-MAY-90	NP-237	.600	J	0	pCi/g
1517	055437	12 - 12.5	20-MAY-90	U-235/236	.600	J	.142	pCi/g
1517	055437	12 - 12.5	20-MAY-90	TH-230	2.020	-	1.897	pCi/g
1517	055437	12 - 12.5	20-MAY-90	PU-239/240	.600	J	0	pCi/g
1517	055437	12 - 12.5	20-MAY-90	TC-99	.900	J	0	pCi/g
1517	055437	12 - 12.5	20-MAY-90	PU-238	.600	J	0	pCi/g
1517	055440	13.5 - 14	20-MAY-90	CS-137	.200	J	0	pCi/g
1517	055440	13.5 - 14	20-MAY-90	U-235/236	.600	J	.142	pCi/g
1517	055440	13.5 - 14	20-MAY-90	TC-99	.900	J	0	pCi/g
1517	055440	13.5 - 14	20-MAY-90	RU-106	1.000	J	0	pCi/g
1517	055440	13.5 - 14	20-MAY-90	PU-239/240	.600	J	0	pCi/g
1517	055440	13.5 - 14	20-MAY-90	PU-238	.600	J	0	pCi/g
1517	055440	13.5 - 14	20-MAY-90	NP-237	.600	J	0	pCi/g
1517	055443	15 - 15.5	20-MAY-90	CS-137	.200	J	0	pCi/g
1517	055443	15 - 15.5	20-MAY-90	NP-237	.600	J	0	pCi/g
1517	055443	15 - 15.5	20-MAY-90	TC-99	.900	J	0	pCi/g

TABLE F-2B
(Continued)

SAMPLE LOCATION	SAMPLE ID	SAMPLE INTERVALS	SAMPLE DATE	PARAMETER	RESULTS	VAL QUAL	BACKGROUND	UNITS
RADIONUCLIDES (Continued)								
1517	055443	15 - 15.5	20-MAY-90	RU-106	1.000	J	0	pCi/g
1517	055443	15 - 15.5	20-MAY-90	U-235/236	.600	J	.142	pCi/g
1517	055443	15 - 15.5	20-MAY-90	PU-239/240	.600	J	0	pCi/g
1517	055443	15 - 15.5	20-MAY-90	PU-238	.600	J	0	pCi/g
1517	055446	16.5 - 17	20-MAY-90	NP-237	.600	J	0	pCi/g
1517	055446	16.5 - 17	20-MAY-90	TH-228	1.930	-	1.341	pCi/g
1517	055446	16.5 - 17	20-MAY-90	U-235/236	.600	J	.142	pCi/g
1517	055446	16.5 - 17	20-MAY-90	TC-99	.900	J	0	pCi/g
1517	055446	16.5 - 17	20-MAY-90	PU-239/240	.600	J	0	pCi/g
1517	055446	16.5 - 17	20-MAY-90	PU-238	.600	J	0	pCi/g
1517	055449	18 - 18.5	20-MAY-90	CS-137	.200	J	0	pCi/g
1517	055449	18 - 18.5	20-MAY-90	U-235/236	.600	J	.142	pCi/g
1517	055449	18 - 18.5	20-MAY-90	TC-99	.900	J	0	pCi/g
1517	055449	18 - 18.5	20-MAY-90	RU-106	1.000	J	0	pCi/g
1517	055449	18 - 18.5	20-MAY-90	PU-239/240	.600	J	0	pCi/g
1517	055449	18 - 18.5	20-MAY-90	PU-238	.600	J	0	pCi/g
1517	055449	18 - 18.5	20-MAY-90	NP-237	.600	J	0	pCi/g
1517	055451	19 - 19.5	20-MAY-90	NP-237	.600	J	0	pCi/g
1517	055451	19 - 19.5	20-MAY-90	PU-238	.600	J	0	pCi/g
1517	055451	19 - 19.5	20-MAY-90	TC-99	.900	J	0	pCi/g
1517	055451	19 - 19.5	20-MAY-90	U-235/236	.600	J	.142	pCi/g
1517	055451	19 - 19.5	20-MAY-90	PU-239/240	.600	J	0	pCi/g
1518	055454	0 - .5	22-MAY-90	NP-237	.600	J	0	pCi/g
1518	055454	0 - .5	22-MAY-90	PU-238	.600	J	0	pCi/g
1518	055454	0 - .5	22-MAY-90	U-234	1.200	J	1.034	pCi/g
1518	055454	0 - .5	22-MAY-90	U-238	1.240	J	1.122	pCi/g
1518	055454	0 - .5	22-MAY-90	U-235/236	.600	J	.142	pCi/g
1518	055454	0 - .5	22-MAY-90	TC-99	.900	J	0	pCi/g
1518	055454	0 - .5	22-MAY-90	PU-239/240	.600	J	0	pCi/g
1518	055456	1 - 1.5	22-MAY-90	CS-137	.200	J	0	pCi/g
1518	055456	1 - 1.5	22-MAY-90	NP-237	.600	J	0	pCi/g
1518	055456	1 - 1.5	22-MAY-90	U-235/236	.600	J	.142	pCi/g
1518	055456	1 - 1.5	22-MAY-90	TC-99	.900	J	0	pCi/g
1518	055456	1 - 1.5	22-MAY-90	PU-239/240	.600	J	0	pCi/g
1518	055456	1 - 1.5	22-MAY-90	PU-238	.600	J	0	pCi/g
1518	055458	2 - 2.5	22-MAY-90	NP-237	.600	J	0	pCi/g
1518	055458	2 - 2.5	22-MAY-90	PU-238	.600	J	0	pCi/g
1518	055458	2 - 2.5	22-MAY-90	PU-239/240	.600	J	0	pCi/g
1518	055458	2 - 2.5	22-MAY-90	U-235/236	.600	J	.142	pCi/g
1518	055458	2 - 2.5	22-MAY-90	TC-99	.900	J	0	pCi/g
1518	055460	3 - 3.5	22-MAY-90	NP-237	.600	J	0	pCi/g
1518	055460	3 - 3.5	22-MAY-90	PU-238	.600	J	0	pCi/g
1518	055460	3 - 3.5	22-MAY-90	TC-99	.900	J	0	pCi/g

TABLE F-2B
(Continued)

SAMPLE LOCATION	SAMPLE ID	SAMPLE INTERVALS	SAMPLE DATE	PARAMETER	RESULTS	VAL QUAL	BACKGROUND	UNITS
RADIONUCLIDES (Continued)								
1518	055460	3 - 3.5	22-MAY-90	PU-239/240	.600	J	0	pCi/g
1518	055462	4 - 4.5	22-MAY-90	CS-137	.200	J	0	pCi/g
1518	055462	4 - 4.5	22-MAY-90	U-235/236	.600	J	.142	pCi/g
1518	055462	4 - 4.5	22-MAY-90	TC-99	.900	J	0	pCi/g
1518	055462	4 - 4.5	22-MAY-90	RU-106	1.000	J	0	pCi/g
1518	055462	4 - 4.5	22-MAY-90	PU-239/240	.600	J	0	pCi/g
1518	055462	4 - 4.5	22-MAY-90	PU-238	.600	J	0	pCi/g
1518	055462	4 - 4.5	22-MAY-90	NP-237	.600	J	0	pCi/g
1518	055464	5 - 5.5	22-MAY-90	NP-237	.600	J	0	pCi/g
1518	055464	5 - 5.5	22-MAY-90	PU-238	.600	J	0	pCi/g
1518	055464	5 - 5.5	22-MAY-90	TC-99	.900	J	0	pCi/g
1518	055464	5 - 5.5	22-MAY-90	U-235/236	.600	J	.142	pCi/g
1518	055464	5 - 5.5	22-MAY-90	PU-239/240	.600	J	0	pCi/g
1518	055466	6 - 6.5	22-MAY-90	NP-237	.600	J	0	pCi/g
1518	055466	6 - 6.5	22-MAY-90	PU-238	.600	J	0	pCi/g
1518	055466	6 - 6.5	22-MAY-90	U-235/236	.600	J	.142	pCi/g
1518	055466	6 - 6.5	22-MAY-90	TC-99	.900	J	0	pCi/g
1518	055466	6 - 6.5	22-MAY-90	PU-239/240	.600	J	0	pCi/g
1518	055468	7 - 7.5	22-MAY-90	NP-237	.600	J	0	pCi/g
1518	055468	7 - 7.5	22-MAY-90	PU-238	.600	J	0	pCi/g
1518	055468	7 - 7.5	22-MAY-90	U-235/236	.600	J	.142	pCi/g
1518	055468	7 - 7.5	22-MAY-90	TC-99	.900	J	0	pCi/g
1518	055468	7 - 7.5	22-MAY-90	PU-239/240	.600	J	0	pCi/g
1518	055470	8 - 8.5	22-MAY-90	NP-237	.600	J	0	pCi/g
1518	055470	8 - 8.5	22-MAY-90	PU-239/240	.600	J	0	pCi/g
1518	055470	8 - 8.5	22-MAY-90	U-235/236	.600	J	.142	pCi/g
1518	055470	8 - 8.5	22-MAY-90	TC-99	.900	J	0	pCi/g
1518	055470	8 - 8.5	22-MAY-90	PU-238	.600	J	0	pCi/g
1518	055472	9 - 9.5	22-MAY-90	CS-137	.200	J	0	pCi/g
1518	055472	9 - 9.5	22-MAY-90	PU-239/240	.600	J	0	pCi/g
1518	055472	9 - 9.5	22-MAY-90	U-235/236	.600	J	.142	pCi/g
1518	055472	9 - 9.5	22-MAY-90	TH-228	1.530	J	1.341	pCi/g
1518	055472	9 - 9.5	22-MAY-90	TC-99	.900	J	0	pCi/g
1518	055472	9 - 9.5	22-MAY-90	PU-238	.600	J	0	pCi/g
1518	055472	9 - 9.5	22-MAY-90	RU-106	1.000	J	0	pCi/g
1518	055472	9 - 9.5	22-MAY-90	NP-237	.600	J	0	pCi/g
1518	055476	11 - 11.5	22-MAY-90	TH-228	5.920	-	1.341	pCi/g
1518	055476	11 - 11.5	22-MAY-90	TH-230	3.010	J	1.897	pCi/g
1518	055476	11 - 11.5	22-MAY-90	TH-232	5.590	-	1.269	pCi/g
1518	055476	11 - 11.5	22-MAY-90	TH-TOTAL	50.500	-	9.47	mg/kg
2046	008950	30 - 31.5	14-DEC-88	SR-90	.700	-	.56	pCi/g
2046	008956	61 - 62.5	15-DEC-88	U-TOTAL	16.000	-	2.54	mg/kg
2065	007184	13.5 - 15	29-SEP-87	U-234	1.200	J	1.034	pCi/g

TABLE F-2B
(Continued)

SAMPLE LOCATION	SAMPLE ID	SAMPLE INTERVALS	SAMPLE DATE	PARAMETER	RESULTS	VAL QUAL	BACKGROUND	UNITS
RADIONUCLIDES (Continued)								
2065	007184	13.5 - 15	29-SEP-87	U-238	1.300	J	1.122	pCi/g
2385	032622	4.5 - 6	20-APR-90	SR-90	1.340	-	.56	pCi/g
2385	032639	45 - 46.5	21-APR-90	U-TOTAL	4.630	J	2.54	mg/kg
3046	032709	100 - 101.5	30-MAY-90	U-234	4.330	J	1.034	pCi/g
3046	032709	100 - 101.5	30-MAY-90	U-238	4.230	J	1.122	pCi/g
3046	032709	100 - 101.5	30-MAY-90	U-TOTAL	12.700	J	2.54	mg/kg
SPA-0	039170	-	29-JUL-92	TH-TOTAL	9.640	J	9.47	mg/kg
SPA-0	039170	-	29-JUL-92	U-TOTAL	18.100	-	2.54	mg/kg
SPA-0	039170	-	29-JUL-92	U-238	2.460	-	1.122	pCi/g
SPA-0	039170	-	29-JUL-92	U-234	2.420	-	1.034	pCi/g
SPA-10	039171	- 10	29-JUL-92	U-TOTAL	3.030	-	2.54	mg/kg
VOLATILE ORGANICS								
1046	008024	15 - 16.5	08-FEB-88	Acetone	8.000	J	0	ug/kg
1046	008024	15 - 16.5	08-FEB-88	Chloroform	3.000	J	0	ug/kg
1046	008024	15 - 16.5	08-FEB-88	Methylene chloride	2.000	-	0	ug/kg
1456	055906	3.75 - 3.75	05-NOV-89	Chloroform	3.000	J	0	ug/kg
1462	055932	4 - 4	07-NOV-89	Chloroform	7.000	-	0	ug/kg
1462	055932	4 - 4	07-NOV-89	Methylene chloride	6.000	-	0	ug/kg
1468	055959	2.5 - 2.5	14-NOV-89	Methylene chloride	2.000	J	0	ug/kg
1471	055972	4 - 4	16-NOV-89	2-Butanone	42.000	-	0	ug/kg
1471	055972	4 - 4	16-NOV-89	Methylene chloride	57.000	-	0	ug/kg
1792	067350	12 - 13.5	21-AUG-91	Xylenes, Total	2.000	J	0	ug/kg
1792	067353	16.5 - 18	22-AUG-91	4-Methyl-2-pentanone	1.000	J	0	ug/kg
1792	067353	16.5 - 18	22-AUG-91	Acetone	36.000	-	0	ug/kg
1792	067353	16.5 - 18	22-AUG-91	Xylenes, Total	1.000	J	0	ug/kg
1792	067356	21.5 - 23	22-AUG-91	4-Methyl-2-pentanone	3.000	J	0	ug/kg
1792	067356	21.5 - 23	22-AUG-91	Acetone	56.000	J	0	ug/kg
1794	067324	0 - 1	13-AUG-91	Acetone	5.000	J	0	ug/kg
1794	067328	2 - 2.5	13-AUG-91	Acetone	10.000	J	0	ug/kg
1795	067367	0 - 1	23-AUG-91	Acetone	5.000	J	0	ug/kg
1795	067370	3 - 4	23-AUG-91	Acetone	5.000	J	0	ug/kg
SEMIVOLATILE ORGANICS								
1456	055906	3.75 - 3.75	05-NOV-89	Fluoranthene	39.000	J	0	ug/kg
1456	055906	3.75 - 3.75	05-NOV-89	Pyrene	43.000	J	0	ug/kg
1459	055919	5 - 5	06-NOV-89	Benzo(a)anthracene	170.000	J	0	ug/kg
1459	055919	5 - 5	06-NOV-89	Benzo(b)fluoranthene	290.000	J	0	ug/kg
1459	055919	5 - 5	06-NOV-89	Fluoranthene	300.000	J	0	ug/kg
1459	055919	5 - 5	06-NOV-89	Phenanthrene	110.000	J	0	ug/kg
1459	055919	5 - 5	06-NOV-89	Pyrene	270.000	J	0	ug/kg
1459	055919	5 - 5	06-NOV-89	Chrysene	170.000	J	0	ug/kg
1459	055919	5 - 5	06-NOV-89	Benzo(a)pyrene	230.000	J	0	ug/kg

TABLE F-2B
(Continued)

SAMPLE LOCATION	SAMPLE ID	SAMPLE INTERVALS	SAMPLE DATE	PARAMETER	RESULTS	VAL QUAL	BACKGROUND	UNITS
SEMIVOLATILE ORGANICS (Continued)								
1462	055932	4 - 4	07-NOV-89	Benzo(a)anthracene	130.000	J	0	ug/kg
1462	055932	4 - 4	07-NOV-89	Pyrene	400.000	-	0	ug/kg
1462	055932	4 - 4	07-NOV-89	Phenanthrene	240.000	J	0	ug/kg
1462	055932	4 - 4	07-NOV-89	Fluoranthene	300.000	J	0	ug/kg
1462	055932	4 - 4	07-NOV-89	Chrysene	150.000	J	0	ug/kg
1462	055932	4 - 4	07-NOV-89	Benzo(b)fluoranthene	140.000	J	0	ug/kg
1465	055945	3.5 - 3.5	08-NOV-89	Pyrene	44.000	J	0	ug/kg
1468	055959	2.5 - 2.5	14-NOV-89	bis(2-Ethylhexyl) phthalate	40.000	J	0	ug/kg
1792	067346	6 - 7.5	21-AUG-91	Benzoic acid	47.000	J	0	ug/kg
1792	067346	6 - 7.5	21-AUG-91	Fluoranthene	42.000	J	0	ug/kg
1792	067346	6 - 7.5	21-AUG-91	Pyrene	48.000	J	0	ug/kg
1792	067350	12 - 13.5	21-AUG-91	2-Methylnaphthalene	56.000	J	0	ug/kg
1792	067350	12 - 13.5	21-AUG-91	Di-n-octyl phthalate	210.000	J	0	ug/kg
1792	067350	12 - 13.5	21-AUG-91	Pyrene	51.000	J	0	ug/kg
1792	067353	16.5 - 18	22-AUG-91	Benzoic acid	57.000	J	0	ug/kg
1792	067353	16.5 - 18	22-AUG-91	Pyrene	57.000	J	0	ug/kg
1792	067356	21.5 - 23	22-AUG-91	Benzoic acid	110.000	J	0	ug/kg
1792	067356	21.5 - 23	22-AUG-91	Diethyl phthalate	84.000	J	0	ug/kg
1793	067333	3 - 4.5	15-AUG-91	Benzoic acid	150.000	J	0	ug/kg
1794	067324	0 - 1	13-AUG-91	Benzo(a)anthracene	100.000	J	0	ug/kg
1794	067324	0 - 1	13-AUG-91	Benzo(g,h,i)perylene	45.000	J	0	ug/kg
1794	067324	0 - 1	13-AUG-91	Benzo(a)pyrene	46.000	J	0	ug/kg
1794	067324	0 - 1	13-AUG-91	Benzo(b)fluoranthene	140.000	J	0	ug/kg
1794	067324	0 - 1	13-AUG-91	Pyrene	170.000	J	0	ug/kg
1794	067324	0 - 1	13-AUG-91	Phenanthrene	96.000	J	0	ug/kg
1794	067324	0 - 1	13-AUG-91	Fluoranthene	170.000	J	0	ug/kg
1794	067324	0 - 1	13-AUG-91	Chrysene	82.000	J	0	ug/kg
1794	067324	0 - 1	13-AUG-91	Benzoic acid	66.000	J	0	ug/kg
1794	067328	2 - 2.5	13-AUG-91	Benzo(a)anthracene	78.000	J	0	ug/kg
1794	067328	2 - 2.5	13-AUG-91	Benzo(b)fluoranthene	88.000	J	0	ug/kg
1794	067328	2 - 2.5	13-AUG-91	Fluoranthene	150.000	J	0	ug/kg
1794	067328	2 - 2.5	13-AUG-91	Pyrene	140.000	J	0	ug/kg
1794	067328	2 - 2.5	13-AUG-91	Phenanthrene	93.000	J	0	ug/kg
1794	067328	2 - 2.5	13-AUG-91	Chrysene	70.000	J	0	ug/kg
1795	067367	0 - 1	23-AUG-91	Anthracene	58.000	J	0	ug/kg
1795	067367	0 - 1	23-AUG-91	Pyrene	500.000	-	0	ug/kg
1795	067367	0 - 1	23-AUG-91	Phenanthrene	370.000	J	0	ug/kg
1795	067367	0 - 1	23-AUG-91	Indeno(1,2,3-cd)pyrene	84.000	J	0	ug/kg
1795	067367	0 - 1	23-AUG-91	Benzo(a)anthracene	270.000	J	0	ug/kg
1795	067367	0 - 1	23-AUG-91	Benzo(g,h,i)perylene	100.000	J	0	ug/kg
1795	067367	0 - 1	23-AUG-91	Chrysene	300.000	J	0	ug/kg
1795	067367	0 - 1	23-AUG-91	Fluoranthene	610.000	-	0	ug/kg
1795	067367	0 - 1	23-AUG-91	Benzo(b)fluoranthene	360.000	J	0	ug/kg

TABLE F-2B
(Continued)

SAMPLE LOCATION	SAMPLE ID	SAMPLE INTERVALS	SAMPLE DATE	PARAMETER	RESULTS	VAL QUAL	BACKGROUND	UNITS
SEMIVOLATILE ORGANICS (Continued)								
1795	067367	0 - 1	23-AUG-91	Benzo(a)pyrene	120.000	J	0	ug/kg
SPA-5	039180	- 5	29-JUL-92	Di-n-butyl phthalate	80.000	J	0	ug/kg
PESTICIDES/PCBs								
1456	055906	3.75 - 3.75	05-NOV-89	Aroclor-1254	130.000	J	0	ug/kg
1459	055919	5 - 5	06-NOV-89	Aroclor-1254	1100.000	J	0	ug/kg
1462	055932	4 - 4	07-NOV-89	Aroclor-1254	690.000	J	0	ug/kg
1468	055959	2.5 - 2.5	14-NOV-89	Aroclor-1254	710.000	J	0	ug/kg
1792	067346	6 - 7.5	21-AUG-91	Aroclor-1254	32.000	J	0	ug/kg
1792	067350	12 - 13.5	21-AUG-91	Aroclor-1254	100.000	J	0	ug/kg
1793	067333	3 - 4.5	15-AUG-91	Aroclor-1254	740.000	-	0	ug/kg
DIOXIN/FURANS								
1792	067343	1.5 - 3	21-AUG-91	Octachlorodibenzo-p-dioxin	.180	-	0	ug/kg
1792	067346	6 - 7.5	21-AUG-91	Octachlorodibenzo-p-dioxin	.350	-	0	ug/kg
1792	067346	6 - 7.5	21-AUG-91	Tetrachlorodibenzofuran	.018	-	0	ug/kg
1792	067350	12 - 13.5	21-AUG-91	Octachlorodibenzo-p-dioxin	.750	-	0	ug/kg
1792	067353	16.5 - 18	22-AUG-91	Octachlorodibenzo-p-dioxin	1.100	-	0	ug/kg
1792	067356	21.5 - 23	22-AUG-91	Octachlorodibenzo-p-dioxin	.120	J	0	ug/kg
1793	067333	3 - 4.5	15-AUG-91	Octachlorodibenzo-p-dioxin	.650	-	0	ug/kg
1794	067324	0 - 1	13-AUG-91	Octachlorodibenzo-p-dioxin	.600	-	0	ug/kg
1794	067328	2 - 2.5	13-AUG-91	Octachlorodibenzo-p-dioxin	1.500	-	0	ug/kg
1795	067367	0 - 1	23-AUG-91	Octachlorodibenzo-p-dioxin	2.900	J	0	ug/kg
1795	067370	3 - 4	23-AUG-91	Octachlorodibenzo-p-dioxin	3.600	J	0	ug/kg

0517

5174

TABLE F-2C

SOUTH FIELD
CONCENTRATIONS OF DETECTED ANALYTES
ABOVE BACKGROUND IN SUBSURFACE SOIL
PHASE II FIELD INVESTIGATION
OPERABLE UNIT 2 REMEDIAL INVESTIGATION
FERNALD ENVIRONMENTAL MANAGEMENT PROJECT

SAMPLE LOCATION	SAMPLE ID	SAMPLE INTERVALS	SAMPLE DATE	PARAMETER	RESULTS	VAL QUAL	Background Concentration	UNITS
METALS								
11186	112507	4.5 - 6.5	12-APR-93	Beryllium	.830	-	.620	mg/kg
11186	112507	4.5 - 6.5	12-APR-93	Copper	27.400	-	20.230	mg/kg
11186	112507	4.5 - 6.5	12-APR-93	Iron	31800.000	-	31188.164	mg/kg
11186	112507	4.5 - 6.5	12-APR-93	Silver	9.600	-	.000	mg/kg
11186	112507	4.5 - 6.5	12-APR-93	Zinc	82.300	-	73.158	mg/kg
11186	112507	4.5 - 6.5	12-APR-93	Vanadium	39.100	-	38.088	mg/kg
11186	112507	4.5 - 6.5	12-APR-93	Molybdenum	8.400	-	.270	mg/kg
11186	112514	9.5 - 11	12-APR-93	Molybdenum	6.900	-	.270	mg/kg
11186	112514	9.5 - 11	12-APR-93	Potassium	2060.000	-	2007.519	mg/kg
11186	112514	9.5 - 11	12-APR-93	Silver	6.900	-	.000	mg/kg
11187	112520	4 - 6	13-APR-93	Silver	3.700	-	.000	mg/kg
11187	112520	4 - 6	13-APR-93	Thallium	.580	J	.490	mg/kg
11187	112526	9 - 10.5	13-APR-93	Beryllium	.650	-	.620	mg/kg
11187	112526	9 - 10.5	13-APR-93	Molybdenum	6.700	-	.270	mg/kg
11187	112526	9 - 10.5	13-APR-93	Silver	7.100	-	.000	mg/kg
11188	110547	4.5 - 6	02-APR-93	Molybdenum	6.200	J	.270	mg/kg
11188	110547	4.5 - 6	02-APR-93	Silver	6.400	-	.000	mg/kg
11188	110556	10 - 11	02-APR-93	Calcium	213000.000	J	150000.000	mg/kg
1964	112648	5 - 6.5	17-APR-93	Aluminum	20500.000	-	16277.291	mg/kg
1964	112648	5 - 6.5	17-APR-93	Barium	203.000	-	121.064	mg/kg
1964	112648	5 - 6.5	17-APR-93	Beryllium	1.000	-	.620	mg/kg
1964	112648	5 - 6.5	17-APR-93	Chromium	22.300	-	20.953	mg/kg
1964	112648	5 - 6.5	17-APR-93	Copper	30.800	-	20.230	mg/kg
1964	112648	5 - 6.5	17-APR-93	Zinc	73.700	-	73.158	mg/kg
1964	112648	5 - 6.5	17-APR-93	Vanadium	47.900	-	38.088	mg/kg
1964	112648	5 - 6.5	17-APR-93	Silver	10.600	-	.000	mg/kg
1964	112648	5 - 6.5	17-APR-93	Nickel	41.700	-	34.747	mg/kg
1964	112648	5 - 6.5	17-APR-93	Molybdenum	10.000	-	.270	mg/kg
1964	112648	5 - 6.5	17-APR-93	Manganese	1140.000	-	1045.407	mg/kg
1964	112648	5 - 6.5	17-APR-93	Lead	17.100	-	15.780	mg/kg
1964	112648	5 - 6.5	17-APR-93	Iron	38400.000	-	31188.164	mg/kg
1965	112737	4 - 6	20-APR-93	Molybdenum	5.200	-	.270	mg/kg
1965	112737	4 - 6	20-APR-93	Silver	4.500	-	.000	mg/kg
1966	110405	.5 - 1	24-MAR-93	Lead	17.600	-	15.780	mg/kg
1966	110405	.5 - 1	24-MAR-93	Molybdenum	6.300	J	.270	mg/kg

0518
5174

TABLE F-2C
(Continued)

SAMPLE LOCATION	SAMPLE ID	SAMPLE INTERVALS	SAMPLE DATE	PARAMETER	RESULTS	VAL QUAL	Background Concentration	UNITS
METALS (Continued)								
1966	110405	.5 - 1	24-MAR-93	Silver	5.300	-	.000	mg/kg
1966	112859	4.5 - 6.5	21-APR-93	Aluminum	17100.000	-	16277.291	mg/kg
1966	112859	4.5 - 6.5	21-APR-93	Beryllium	.740	-	.620	mg/kg
1966	112859	4.5 - 6.5	21-APR-93	Barium	153.000	-	121.064	mg/kg
1966	112859	4.5 - 6.5	21-APR-93	Copper	23.900	-	20.230	mg/kg
1966	112859	4.5 - 6.5	21-APR-93	Iron	33300.000	-	31188.164	mg/kg
1966	112859	4.5 - 6.5	21-APR-93	Vanadium	44.700	-	38.088	mg/kg
1966	112859	4.5 - 6.5	21-APR-93	Silver	9.500	-	.000	mg/kg
1966	112859	4.5 - 6.5	21-APR-93	Molybdenum	8.900	-	.270	mg/kg
1966	112859	4.5 - 6.5	21-APR-93	Lead	16.000	-	15.780	mg/kg
1966	112883	24 - 25	22-APR-93	Beryllium	.730	-	.620	mg/kg
1966	112883	24 - 25	22-APR-93	Zinc	88.600	-	73.158	mg/kg
1966	112883	24 - 25	22-APR-93	Silver	9.700	-	.000	mg/kg
1966	112883	24 - 25	22-APR-93	Nickel	36.700	-	34.747	mg/kg
1966	112883	24 - 25	22-APR-93	Molybdenum	8.600	-	.270	mg/kg
1966	112883	24 - 25	22-APR-93	Copper	24.400	-	20.230	mg/kg
1966	112883	24 - 25	22-APR-93	Iron	32900.000	-	31188.164	mg/kg
1967	110362	.5 - 1	22-MAR-93	Molybdenum	5.300	-	.270	mg/kg
1967	110362	.5 - 1	22-MAR-93	Silver	5.200	-	.000	mg/kg
1967	112696	4.5 - 7.5	18-APR-93	Molybdenum	6.000	-	.270	mg/kg
1967	112696	4.5 - 7.5	18-APR-93	Silver	5.000	-	.000	mg/kg
1967	112731	29.5 - 31	19-APR-93	Molybdenum	5.400	-	.270	mg/kg
1967	112731	29.5 - 31	19-APR-93	Silver	5.600	-	.000	mg/kg
1968	110396	.5 - 1	22-MAR-93	Molybdenum	4.600	-	.270	mg/kg
1968	110396	.5 - 1	22-MAR-93	Silver	4.000	-	.000	mg/kg
1968	112835	4.5 - 6.5	20-APR-93	Potassium	2480.000	-	2007.519	mg/kg
1968	112835	4.5 - 6.5	20-APR-93	Silver	4.400	-	.000	mg/kg
1968	112849	15.5 - 16.5	20-APR-93	Calcium	187000.000	-	150000.000	mg/kg
1968	112849	15.5 - 16.5	20-APR-93	Copper	23.500	-	20.230	mg/kg
1968	112849	15.5 - 16.5	20-APR-93	Sodium	272.000	-	227.947	mg/kg
1968	112849	15.5 - 16.5	20-APR-93	Zinc	82.600	-	73.158	mg/kg
1968	112849	15.5 - 16.5	20-APR-93	Silver	7.900	-	.000	mg/kg
1968	112849	15.5 - 16.5	20-APR-93	Magnesium	50800.000	-	43052.339	mg/kg
1968	112849	15.5 - 16.5	20-APR-93	Iron	32700.000	-	31188.164	mg/kg
1969	110339	.5 - 1	22-MAR-93	Aluminum	22800.000	-	16277.291	mg/kg
1969	110339	.5 - 1	22-MAR-93	Sodium	259.000	-	227.947	mg/kg
1969	110339	.5 - 1	22-MAR-93	Silver	5.300	-	.000	mg/kg
1969	110339	.5 - 1	22-MAR-93	Molybdenum	5.200	-	.270	mg/kg
1969	110339	.5 - 1	22-MAR-93	Lead	16.800	J	15.780	mg/kg
1969	110339	.5 - 1	22-MAR-93	Beryllium	2.200	-	.620	mg/kg
1969	110339	.5 - 1	22-MAR-93	Barium	124.000	-	121.064	mg/kg
1969	112559	4.5 - 6	15-APR-93	Silver	3.700	-	.000	mg/kg
1969	112563	9 - 10.5	15-APR-93	Beryllium	.660	-	.620	mg/kg

TABLE F-2C
(Continued)

SAMPLE LOCATION	SAMPLE ID	SAMPLE INTERVALS	SAMPLE DATE	PARAMETER	RESULTS	VAL QUAL	Background Concentration	UNITS
METALS (Continued)								
1969	112563	9 - 10.5	15-APR-93	Silver	5.900	-	.000	mg/kg
1969	112563	9 - 10.5	15-APR-93	Molybdenum	6.200	-	.270	mg/kg
1970	112690	4 - 5.5	18-APR-93	Antimony	1.200	J	.000	mg/kg
1970	112690	4 - 5.5	18-APR-93	Copper	34.200	-	20.230	mg/kg
1970	112690	4 - 5.5	18-APR-93	Zinc	81.700	-	73.158	mg/kg
1970	112690	4 - 5.5	18-APR-93	Silver	7.000	-	.000	mg/kg
1970	112690	4 - 5.5	18-APR-93	Molybdenum	9.800	-	.270	mg/kg
1970	112690	4 - 5.5	18-APR-93	Lead	40.000	-	15.780	mg/kg
1970	112893	9 - 10.5	18-APR-93	Beryllium	.650	-	.620	mg/kg
1970	112893	9 - 10.5	18-APR-93	Silver	6.000	-	.000	mg/kg
1970	112893	9 - 10.5	18-APR-93	Molybdenum	5.200	-	.270	mg/kg
1971	110327	.5 - 1	22-MAR-93	Beryllium	.780	-	.620	mg/kg
1971	110327	.5 - 1	22-MAR-93	Molybdenum	6.100	-	.270	mg/kg
1971	110327	.5 - 1	22-MAR-93	Silver	6.300	-	.000	mg/kg
1971	112536	4.5 - 6.5	15-APR-93	Beryllium	.920	-	.620	mg/kg
1971	112536	4.5 - 6.5	15-APR-93	Molybdenum	8.900	-	.270	mg/kg
1971	112536	4.5 - 6.5	15-APR-93	Copper	25.000	-	20.230	mg/kg
1971	112593	9.5 - 11	15-APR-93	Cyanide	.780	-	.170	mg/kg
1971	112536	4.5 - 6.5	15-APR-93	Potassium	2480.000	-	2007.519	mg/kg
1971	112536	4.5 - 6.5	15-APR-93	Silver	9.200	-	.000	mg/kg
1971	112593	9.5 - 11	15-APR-93	Beryllium	.650	-	.620	mg/kg
1971	112593	9.5 - 11	15-APR-93	Molybdenum	7.500	-	.270	mg/kg
1971	112593	9.5 - 11	15-APR-93	Silver	6.400	-	.000	mg/kg
1971	112593	9.5 - 11	15-APR-93	Potassium	2590.000	-	2007.519	mg/kg
1972	110382	.5 - 1	19-MAR-93	Arsenic	14.100	-	9.704	mg/kg
1972	110382	.5 - 1	19-MAR-93	Silver	3.400	J	.000	mg/kg
1972	110382	.5 - 1	19-MAR-93	Lead	44.100	-	15.780	mg/kg
1972	110584	2.5 - 4	08-APR-93	Aluminum	20000.000	-	16277.291	mg/kg
1972	110584	2.5 - 4	08-APR-93	Arsenic	10.200	J	9.704	mg/kg
1972	110584	2.5 - 4	08-APR-93	Vanadium	47.500	-	38.088	mg/kg
1972	110584	2.5 - 4	08-APR-93	Silver	9.000	-	.000	mg/kg
1972	110584	2.5 - 4	08-APR-93	Molybdenum	8.600	-	.270	mg/kg
1972	110584	2.5 - 4	08-APR-93	Copper	23.900	-	20.230	mg/kg
1972	112494	7.5 - 9	08-APR-93	Sodium	294.000	-	227.947	mg/kg
1973	110413	.5 - 1	24-MAR-93	Arsenic	9.800	-	9.704	mg/kg
1973	110413	.5 - 1	24-MAR-93	Cyanide	.330	-	.170	mg/kg
1973	110413	.5 - 1	24-MAR-93	Silver	2.800	-	.000	mg/kg
1973	110413	.5 - 1	24-MAR-93	Beryllium	.820	-	.620	mg/kg
1974	110415	.5 - 1	24-MAR-93	Molybdenum	5.000	J	.270	mg/kg
1974	110415	.5 - 1	24-MAR-93	Silver	3.900	-	.000	mg/kg
1975	110389	.5 - 1	22-MAR-93	Lead	18.700	J	15.780	mg/kg
1975	110389	.5 - 1	22-MAR-93	Molybdenum	4.000	-	.270	mg/kg
1975	110389	.5 - 1	22-MAR-93	Silver	4.100	-	.000	mg/kg

TABLE F-2C
(Continued)

SAMPLE LOCATION	SAMPLE ID	SAMPLE INTERVALS	SAMPLE DATE	PARAMETER	RESULTS	VAL QUAL	Background Concentration	UNITS
METALS (Continued)								
1975	112545	4 - 5	13-APR-93	Aluminum	16600.000	-	16277.291	mg/kg
1975	112545	4 - 5	13-APR-93	Beryllium	.850	-	.620	mg/kg
1975	112545	4 - 5	13-APR-93	Arsenic	11.900	-	9.704	mg/kg
1975	112545	4 - 5	13-APR-93	Molybdenum	7.700	-	.270	mg/kg
1975	112545	4 - 5	13-APR-93	Copper	24.400	-	20.230	mg/kg
1975	112545	4 - 5	13-APR-93	Silver	8.700	-	.000	mg/kg
1975	112545	4 - 5	13-APR-93	Barium	179.000	-	121.064	mg/kg
1975	112550	8.5 - 10.5	13-APR-93	Copper	21.300	-	20.230	mg/kg
1975	112550	8.5 - 10.5	13-APR-93	Potassium	2210.000	-	2007.519	mg/kg
1975	112550	8.5 - 10.5	13-APR-93	Silver	7.400	-	.000	mg/kg
1975	112550	8.5 - 10.5	13-APR-93	Molybdenum	7.500	-	.270	mg/kg
1977	110571	8.5 - 10	06-APR-93	Beryllium	.770	-	.620	mg/kg
1977	110571	8.5 - 10	06-APR-93	Molybdenum	5.700	-	.270	mg/kg
1977	110571	8.5 - 10	06-APR-93	Silver	6.300	-	.000	mg/kg
1977	110571	8.5 - 10	06-APR-93	Copper	20.800	-	20.230	mg/kg
1977	110579	16.5 - 18.5	07-APR-93	Molybdenum	5.500	-	.270	mg/kg
1977	110579	16.5 - 18.5	07-APR-93	Silver	3.800	-	.000	mg/kg
1978	110406	.5 - 1	24-MAR-93	Molybdenum	7.100	J	.270	mg/kg
1978	110406	.5 - 1	24-MAR-93	Silver	5.600	-	.000	mg/kg
1978	112584	9.5 - 11	16-APR-93	Beryllium	1.000	-	.620	mg/kg
1978	112584	9.5 - 11	16-APR-93	Silver	7.200	-	.000	mg/kg
1978	112584	9.5 - 11	16-APR-93	Molybdenum	6.400	-	.270	mg/kg
1978	112584	9.5 - 11	16-APR-93	Copper	23.900	-	20.230	mg/kg
1978	112588	13.5 - 15	16-APR-93	Calcium	252000.000	-	150000.000	mg/kg
SF-SS-19	110369	.5 - 1	22-MAR-93	Lead	60.300	J	15.780	mg/kg
SF-SS-19	110369	.5 - 1	22-MAR-93	Molybdenum	4.500	-	.270	mg/kg
SF-SS-19	110369	.5 - 1	22-MAR-93	Silver	4.500	-	.000	mg/kg
TRENCH #1	113718	2 - 2	03-JUN-93	Copper	26.700	-	20.230	mg/kg
TRENCH #1	113718	2 - 2	03-JUN-93	Cyanide	.430	-	.170	mg/kg
TRENCH #1	113718	2 - 2	03-JUN-93	Silicon	3370.000	J	1069.496	mg/kg
TRENCH #1	113718	2 - 2	03-JUN-93	Lead	36.400	-	15.780	mg/kg
TRENCH 4 SF	113722	0 - 3.42	16-JUN-93	Antimony	1.800	J	.000	mg/kg
TRENCH 4 SF	113722	0 - 3.42	16-JUN-93	Beryllium	.870	-	.620	mg/kg
TRENCH 4 SF	113722	0 - 3.42	16-JUN-93	Copper	436.000	J	20.230	mg/kg
TRENCH 4 SF	113722	0 - 3.42	16-JUN-93	Chromium	36.200	-	20.953	mg/kg
TRENCH 4 SF	113722	0 - 3.42	16-JUN-93	Cyanide	.180	-	.170	mg/kg
TRENCH 4 SF	113722	0 - 3.42	16-JUN-93	Barium	149.000	-	121.064	mg/kg
TRENCH 4 SF	113722	0 - 3.42	16-JUN-93	Zinc	508.000	-	73.158	mg/kg
TRENCH 4 SF	113722	0 - 3.42	16-JUN-93	Sodium	287.000	-	227.947	mg/kg
TRENCH 4 SF	113722	0 - 3.42	16-JUN-93	Silver	14.100	-	.000	mg/kg
TRENCH 4 SF	113722	0 - 3.42	16-JUN-93	Nickel	74.200	J	34.747	mg/kg
TRENCH 4 SF	113722	0 - 3.42	16-JUN-93	Molybdenum	17.500	-	.270	mg/kg
TRENCH 4 SF	113722	0 - 3.42	16-JUN-93	Mercury	.730	-	.290	mg/kg

0521

5174

TABLE F-2C
(Continued)

SAMPLE LOCATION	SAMPLE ID	SAMPLE INTERVALS	SAMPLE DATE	PARAMETER	RESULTS	VAL QUAL	Background Concentration	UNITS
METALS (Continued)								
TRENCH 4 SF	113722	0 - 3.42	16-JUN-93	Lead	385.000	J	15.780	mg/kg
TRENCH 4 SF	113722	0 - 3.42	16-JUN-93	Iron	44100.000	-	31188.164	mg/kg
RADIONUCLIDES								
11186	112507	4.5 - 6.5	12-APR-93	GROSS ALPHA	29.300	-	.000	pCi/g
11186	112507	4.5 - 6.5	12-APR-93	NP-237	.553	N	.000	pCi/g
11186	112507	4.5 - 6.5	12-APR-93	GROSS BETA	32.100	-	.000	pCi/g
11186	112507	4.5 - 6.5	12-APR-93	RA-226	1.990	-	1.470	pCi/g
11186	112507	4.5 - 6.5	12-APR-93	TH-230	2.000	-	1.897	pCi/g
11186	112507	4.5 - 6.5	12-APR-93	U-235/236	.300	J	.142	pCi/g
11186	112507	4.5 - 6.5	12-APR-93	U-238	6.610	-	1.122	pCi/g
11186	112507	4.5 - 6.5	12-APR-93	U-234	6.050	-	1.034	pCi/g
11186	112507	4.5 - 6.5	12-APR-93	SR-90	.815	J	.560	pCi/g
11186	112507	4.5 - 6.5	12-APR-93	PU-239/240	.042	J	.000	pCi/g
11186	112507	4.5 - 6.5	12-APR-93	PU-238	.044	J	.000	pCi/g
11186	112514	9.5 - 11	12-APR-93	GROSS ALPHA	26.800	-	.000	pCi/g
11186	112514	9.5 - 11	12-APR-93	NP-237	.267	N	.000	pCi/g
11186	112514	9.5 - 11	12-APR-93	U-TOTAL	17.500	-	2.540	mg/kg
11186	112514	9.5 - 11	12-APR-93	U-238	2.730	-	1.122	pCi/g
11186	112514	9.5 - 11	12-APR-93	U-235/236	.153	J	.142	pCi/g
11186	112514	9.5 - 11	12-APR-93	U-234	2.310	-	1.034	pCi/g
11186	112514	9.5 - 11	12-APR-93	SR-90	.889	J	.560	pCi/g
11186	112514	9.5 - 11	12-APR-93	PU-238	.025	J	.000	pCi/g
11186	112514	9.5 - 11	12-APR-93	GROSS BETA	29.800	-	.000	pCi/g
11187	112520	4 - 6	13-APR-93	GROSS ALPHA	176.000	-	.000	pCi/g
11187	112520	4 - 6	13-APR-93	NP-237	.316	N	.000	pCi/g
11187	112520	4 - 6	13-APR-93	U-TOTAL	297.000	-	2.540	mg/kg
11187	112520	4 - 6	13-APR-93	TH-232	1.290	-	1.269	pCi/g
11187	112520	4 - 6	13-APR-93	TH-TOTAL	11.800	-	9.470	mg/kg
11187	112520	4 - 6	13-APR-93	TH-230	2.610	-	1.897	pCi/g
11187	112520	4 - 6	13-APR-93	RA-228	1.540	-	1.325	pCi/g
11187	112520	4 - 6	13-APR-93	PU-239/240	.016	J	.000	pCi/g
11187	112520	4 - 6	13-APR-93	PU-238	.023	-	.000	pCi/g
11187	112520	4 - 6	13-APR-93	GROSS BETA	157.000	-	.000	pCi/g
11187	112526	9 - 10.5	13-APR-93	GROSS ALPHA	29.800	-	.000	pCi/g
11187	112526	9 - 10.5	13-APR-93	U-TOTAL	12.300	-	2.540	mg/kg
11187	112526	9 - 10.5	13-APR-93	U-238	4.550	-	1.122	pCi/g
11187	112526	9 - 10.5	13-APR-93	U-234	3.510	-	1.034	pCi/g
11187	112526	9 - 10.5	13-APR-93	SR-90	.892	J	.560	pCi/g
11187	112526	9 - 10.5	13-APR-93	PU-239/240	.034	J	.000	pCi/g
11187	112526	9 - 10.5	13-APR-93	PU-238	.024	J	.000	pCi/g
11187	112526	9 - 10.5	13-APR-93	NP-237	6.530	-	.000	pCi/g
11187	112526	9 - 10.5	13-APR-93	GROSS BETA	42.300	-	.000	pCi/g

TABLE F-2C
(Continued)

SAMPLE LOCATION	SAMPLE ID	SAMPLE INTERVALS	SAMPLE DATE	PARAMETER	RESULTS	VAL QUAL	Background Concentration	UNITS
RADIONUCLIDES (Continued)								
11188	110547	4.5 - 6	02-APR-93	GROSS ALPHA	18.100	-	.000	pCi/g
11188	110547	4.5 - 6	02-APR-93	NP-237	.078	N	.000	pCi/g
11188	110547	4.5 - 6	02-APR-93	GROSS BETA	19.500	-	.000	pCi/g
11188	110547	4.5 - 6	02-APR-93	SR-90	2.390	J	.560	pCi/g
11188	110547	4.5 - 6	02-APR-93	PU-238	.025	J	.000	pCi/g
11188	110547	4.5 - 6	02-APR-93	U-TOTAL	6.680	J	2.540	mg/kg
11188	110547	4.5 - 6	02-APR-93	U-238	1.860	-	1.122	pCi/g
11188	110547	4.5 - 6	02-APR-93	U-235/236	.146	J	.142	pCi/g
11188	110547	4.5 - 6	02-APR-93	U-234	1.750	-	1.034	pCi/g
11188	110556	10 - 11	02-APR-93	GROSS ALPHA	17.300	-	.000	pCi/g
11188	110556	10 - 11	02-APR-93	GROSS BETA	19.200	-	.000	pCi/g
11188	110556	10 - 11	02-APR-93	PU-239/240	.015	J	.000	pCi/g
11188	110556	10 - 11	02-APR-93	SR-90	.789	J	.560	pCi/g
11188	110556	10 - 11	02-APR-93	NP-237	.037	N	.000	pCi/g
1964	112648	5 - 6.5	17-APR-93	GROSS ALPHA	23.900	-	.000	pCi/g
1964	112648	5 - 6.5	17-APR-93	GROSS BETA	33.800	-	.000	pCi/g
1964	112648	5 - 6.5	17-APR-93	U-TOTAL	16.700	J	2.540	mg/kg
1964	112648	5 - 6.5	17-APR-93	U-238	2.910	-	1.122	pCi/g
1964	112648	5 - 6.5	17-APR-93	U-234	2.590	-	1.034	pCi/g
1964	112648	5 - 6.5	17-APR-93	PU-239/240	.030	J	.000	pCi/g
1964	112648	5 - 6.5	17-APR-93	NP-237	.070	N	.000	pCi/g
1964	112685	29 - 30.5	17-APR-93	GROSS ALPHA	10.200	-	.000	pCi/g
1964	112685	29 - 30.5	17-APR-93	U-TOTAL	10.300	J	2.540	mg/kg
1964	112685	29 - 30.5	17-APR-93	GROSS BETA	13.900	-	.000	pCi/g
1965	112737	4 - 6	20-APR-93	GROSS ALPHA	15.100	-	.000	pCi/g
1965	112737	4 - 6	20-APR-93	U-TOTAL	20.600	-	2.540	mg/kg
1965	112737	4 - 6	20-APR-93	U-238	3.040	-	1.122	pCi/g
1965	112737	4 - 6	20-APR-93	U-234	3.070	-	1.034	pCi/g
1965	112737	4 - 6	20-APR-93	TH-230	2.810	J	1.897	pCi/g
1965	112737	4 - 6	20-APR-93	PU-238	.097	J	.000	pCi/g
1965	112737	4 - 6	20-APR-93	NP-237	.032	N	.000	pCi/g
1965	112737	4 - 6	20-APR-93	GROSS BETA	22.300	-	.000	pCi/g
1965	112763	26.5 - 28	21-APR-93	GROSS BETA	22.000	-	.000	pCi/g
1965	112763	26.5 - 28	21-APR-93	U-TOTAL	9.810	-	2.540	mg/kg
1966	110405	.5 - 1	24-MAR-93	CS-137	.301	-	.000	pCi/g
1966	110405	.5 - 1	24-MAR-93	U-TOTAL	31.720	-	2.540	mg/kg
1966	110405	.5 - 1	24-MAR-93	U-238	10.600	-	1.122	pCi/g
1966	110405	.5 - 1	24-MAR-93	U-235/236	.473	J	.142	pCi/g
1966	110405	.5 - 1	24-MAR-93	U-234	8.050	-	1.034	pCi/g
1966	110405	.5 - 1	24-MAR-93	TH-TOTAL	26.000	-	9.470	mg/kg
1966	110405	.5 - 1	24-MAR-93	TH-232	2.860	-	1.269	pCi/g
1966	110405	.5 - 1	24-MAR-93	TH-230	4.650	-	1.897	pCi/g
1966	110405	.5 - 1	24-MAR-93	TH-228	2.860	-	1.341	pCi/g

TABLE F-2C
(Continued)

SAMPLE LOCATION	SAMPLE ID	SAMPLE INTERVALS	SAMPLE DATE	PARAMETER	RESULTS	VAL QUAL	Background Concentration	UNITS
RADIONUCLIDES (Continued)								
1966	110405	.5 - 1	24-MAR-93	RA-228	3.380	-	1.325	pCi/g
1966	110405	.5 - 1	24-MAR-93	PU-239/240	.045	J	.000	pCi/g
1966	110405	.5 - 1	24-MAR-93	PU-238	.052	J	.000	pCi/g
1966	110405	.5 - 1	24-MAR-93	NP-237	.283	N	.000	pCi/g
1966	110405	.5 - 1	24-MAR-93	GROSS BETA	103.000	J	.000	pCi/g
1966	110405	.5 - 1	24-MAR-93	GROSS ALPHA	57.600	-	.000	pCi/g
1966	112859	4.5 - 6.5	21-APR-93	GROSS ALPHA	21.700	-	.000	pCi/g
1966	112859	4.5 - 6.5	21-APR-93	U-TOTAL	13.900	-	2.540	mg/kg
1966	112859	4.5 - 6.5	21-APR-93	U-238	1.900	-	1.122	pCi/g
1966	112859	4.5 - 6.5	21-APR-93	U-234	1.780	-	1.034	pCi/g
1966	112859	4.5 - 6.5	21-APR-93	GROSS BETA	46.500	-	.000	pCi/g
1966	112859	4.5 - 6.5	21-APR-93	SR-90	.861	J	.560	pCi/g
1966	112859	4.5 - 6.5	21-APR-93	RA-226	1.840	-	1.470	pCi/g
1966	112883	24 - 25	22-APR-93	GROSS ALPHA	19.100	-	.000	pCi/g
1966	112883	24 - 25	22-APR-93	SR-90	.963	J	.560	pCi/g
1966	112883	24 - 25	22-APR-93	U-TOTAL	12.600	-	2.540	mg/kg
1966	112883	24 - 25	22-APR-93	NP-237	.070	N	.000	pCi/g
1966	112883	24 - 25	22-APR-93	GROSS BETA	34.300	-	.000	pCi/g
1967	110362	.5 - 1	22-MAR-93	CS-137	.237	-	.000	pCi/g
1967	110362	.5 - 1	22-MAR-93	U-TOTAL	7.340	-	2.540	mg/kg
1967	110362	.5 - 1	22-MAR-93	U-238	2.360	-	1.122	pCi/g
1967	110362	.5 - 1	22-MAR-93	U-234	2.350	-	1.034	pCi/g
1967	110362	.5 - 1	22-MAR-93	PU-238	.096	J	.000	pCi/g
1967	110362	.5 - 1	22-MAR-93	NP-237	.166	N	.000	pCi/g
1967	110362	.5 - 1	22-MAR-93	GROSS ALPHA	14.600	-	.000	pCi/g
1967	110362	.5 - 1	22-MAR-93	GROSS BETA	39.100	-	.000	pCi/g
1967	112696	4.5 - 7.5	18-APR-93	GROSS ALPHA	21.400	-	.000	pCi/g
1967	112696	4.5 - 7.5	18-APR-93	U-238	2.560	-	1.122	pCi/g
1967	112696	4.5 - 7.5	18-APR-93	U-235/236	.160	J	.142	pCi/g
1967	112696	4.5 - 7.5	18-APR-93	U-TOTAL	15.300	J	2.540	mg/kg
1967	112696	4.5 - 7.5	18-APR-93	U-234	2.500	-	1.034	pCi/g
1967	112696	4.5 - 7.5	18-APR-93	GROSS BETA	27.000	-	.000	pCi/g
1967	112696	4.5 - 7.5	18-APR-93	TH-230	4.350	-	1.897	pCi/g
1967	112731	29.5 - 31	19-APR-93	GROSS ALPHA	21.900	-	.000	pCi/g
1967	112731	29.5 - 31	19-APR-93	TH-230	1.960	J	1.897	pCi/g
1967	112731	29.5 - 31	19-APR-93	U-TOTAL	9.170	-	2.540	mg/kg
1967	112731	29.5 - 31	19-APR-93	GROSS BETA	22.900	-	.000	pCi/g
1968	110396	.5 - 1	22-MAR-93	CS-137	.311	-	.000	pCi/g
1968	110396	.5 - 1	22-MAR-93	U-TOTAL	30.000	-	2.540	mg/kg
1968	110396	.5 - 1	22-MAR-93	U-238	9.410	-	1.122	pCi/g
1968	110396	.5 - 1	22-MAR-93	U-235/236	.474	J	.142	pCi/g
1968	110396	.5 - 1	22-MAR-93	U-234	9.130	-	1.034	pCi/g
1968	110396	.5 - 1	22-MAR-93	TH-230	1.930	-	1.897	pCi/g

TABLE F-2C
(Continued)

SAMPLE LOCATION	SAMPLE ID	SAMPLE INTERVALS	SAMPLE DATE	PARAMETER	RESULTS	VAL QUAL	Background Concentration	UNITS
RADIONUCLIDES (Continued)								
1968	110396	.5 - 1	22-MAR-93	NP-237	.116	N	.000	pCi/g
1968	110396	.5 - 1	22-MAR-93	GROSS BETA	42.000	-	.000	pCi/g
1968	110396	.5 - 1	22-MAR-93	GROSS ALPHA	32.600	-	.000	pCi/g
1968	112835	4.5 - 6.5	20-APR-93	GROSS ALPHA	22.500	-	.000	pCi/g
1968	112835	4.5 - 6.5	20-APR-93	U-TOTAL	14.900	-	2.540	mg/kg
1968	112835	4.5 - 6.5	20-APR-93	U-234	1.360	-	1.034	pCi/g
1968	112835	4.5 - 6.5	20-APR-93	PU-238	.103	J	.000	pCi/g
1968	112835	4.5 - 6.5	20-APR-93	GROSS BETA	27.800	-	.000	pCi/g
1968	112835	4.5 - 6.5	20-APR-93	U-238	1.710	-	1.122	pCi/g
1968	112835	4.5 - 6.5	20-APR-93	NP-237	.075	N	.000	pCi/g
1968	112849	15.5 - 16.5	20-APR-93	GROSS ALPHA	8.720	-	.000	pCi/g
1968	112849	15.5 - 16.5	20-APR-93	NP-237	.119	N	.000	pCi/g
1968	112849	15.5 - 16.5	20-APR-93	GROSS BETA	18.000	-	.000	pCi/g
1968	112849	15.5 - 16.5	20-APR-93	U-TOTAL	12.200	-	2.540	mg/kg
1969	110339	.5 - 1	22-MAR-93	GROSS ALPHA	20.400	-	.000	pCi/g
1969	110339	.5 - 1	22-MAR-93	GROSS BETA	33.200	-	.000	pCi/g
1969	110339	.5 - 1	22-MAR-93	NP-237	.356	N	.000	pCi/g
1969	110339	.5 - 1	22-MAR-93	PU-238	.068	J	.000	pCi/g
1969	110339	.5 - 1	22-MAR-93	PU-239/240	.083	J	.000	pCi/g
1969	110339	.5 - 1	22-MAR-93	U-234	3.240	-	1.034	pCi/g
1969	110339	.5 - 1	22-MAR-93	U-238	3.700	-	1.122	pCi/g
1969	110339	.5 - 1	22-MAR-93	U-TOTAL	9.850	-	2.540	mg/kg
1969	110339	.5 - 1	22-MAR-93	U-235/236	.241	-	.142	pCi/g
1969	112559	4.5 - 6	15-APR-93	GROSS ALPHA	21.500	-	.000	pCi/g
1969	112559	4.5 - 6	15-APR-93	GROSS BETA	21.000	-	.000	pCi/g
1969	112559	4.5 - 6	15-APR-93	U-234	1.440	-	1.034	pCi/g
1969	112559	4.5 - 6	15-APR-93	U-TOTAL	4.820	-	2.540	mg/kg
1969	112559	4.5 - 6	15-APR-93	U-238	1.760	-	1.122	pCi/g
1969	112559	4.5 - 6	15-APR-93	SR-90	.650	J	.560	pCi/g
1969	112559	4.5 - 6	15-APR-93	NP-237	.034	N	.000	pCi/g
1969	112563	9 - 10.5	15-APR-93	GROSS ALPHA	8.900	-	.000	pCi/g
1969	112563	9 - 10.5	15-APR-93	U-TOTAL	3.470	-	2.540	mg/kg
1969	112563	9 - 10.5	15-APR-93	SR-90	.666	J	.560	pCi/g
1969	112563	9 - 10.5	15-APR-93	PU-238	.058	J	.000	pCi/g
1969	112563	9 - 10.5	15-APR-93	NP-237	.034	N	.000	pCi/g
1969	112563	9 - 10.5	15-APR-93	GROSS BETA	19.200	-	.000	pCi/g
1970	112690	4 - 5.5	18-APR-93	CS-137	.230	-	.000	pCi/g
1970	112690	4 - 5.5	18-APR-93	U-238	3.790	-	1.122	pCi/g
1970	112690	4 - 5.5	18-APR-93	U-TOTAL	20.400	J	2.540	mg/kg
1970	112690	4 - 5.5	18-APR-93	U-234	3.680	-	1.034	pCi/g
1970	112690	4 - 5.5	18-APR-93	GROSS BETA	27.800	-	.000	pCi/g
1970	112690	4 - 5.5	18-APR-93	GROSS ALPHA	21.300	-	.000	pCi/g
1970	112690	4 - 5.5	18-APR-93	PU-238	.280	J	.000	pCi/g

TABLE F-2C
(Continued)

SAMPLE LOCATION	SAMPLE ID	SAMPLE INTERVALS	SAMPLE DATE	PARAMETER	RESULTS	VAL QUAL	Background Concentration	UNITS
RADIONUCLIDES (Continued)								
1970	112690	4 - 5.5	18-APR-93	SR-90	.800	J	.560	pCi/g
1970	112893	9 - 10.5	18-APR-93	GROSS BETA	19.800	-	.000	pCi/g
1970	112893	9 - 10.5	18-APR-93	U-TOTAL	16.200	J	2.540	mg/kg
1970	112893	9 - 10.5	18-APR-93	U-234	1.060	-	1.034	pCi/g
1970	112893	9 - 10.5	18-APR-93	SR-90	.690	J	.560	pCi/g
1970	112893	9 - 10.5	18-APR-93	PU-238	.160	J	.000	pCi/g
1971	110327	.5 - 1	22-MAR-93	GROSS ALPHA	22.900	-	.000	pCi/g
1971	110327	.5 - 1	22-MAR-93	PU-238	.016	J	.000	pCi/g
1971	110327	.5 - 1	22-MAR-93	U-TOTAL	16.700	-	2.540	mg/kg
1971	110327	.5 - 1	22-MAR-93	U-238	4.840	-	1.122	pCi/g
1971	110327	.5 - 1	22-MAR-93	U-235/236	.261	J	.142	pCi/g
1971	110327	.5 - 1	22-MAR-93	U-234	5.050	-	1.034	pCi/g
1971	110327	.5 - 1	22-MAR-93	PU-239/240	.021	J	.000	pCi/g
1971	110327	.5 - 1	22-MAR-93	NP-237	.077	N	.000	pCi/g
1971	110327	.5 - 1	22-MAR-93	GROSS BETA	36.800	-	.000	pCi/g
1971	112536	4.5 - 6.5	15-APR-93	GROSS ALPHA	17.100	-	.000	pCi/g
1971	112536	4.5 - 6.5	15-APR-93	U-TOTAL	2.580	J	2.540	mg/kg
1971	112536	4.5 - 6.5	15-APR-93	U-238	1.340	-	1.122	pCi/g
1971	112536	4.5 - 6.5	15-APR-93	U-234	1.070	-	1.034	pCi/g
1971	112536	4.5 - 6.5	15-APR-93	SR-90	1.360	J	.560	pCi/g
1971	112536	4.5 - 6.5	15-APR-93	RA-228	1.540	-	1.325	pCi/g
1971	112536	4.5 - 6.5	15-APR-93	PU-238	.035	J	.000	pCi/g
1971	112536	4.5 - 6.5	15-APR-93	GROSS BETA	32.900	-	.000	pCi/g
1971	112593	9.5 - 11	15-APR-93	GROSS ALPHA	16.000	-	.000	pCi/g
1971	112593	9.5 - 11	15-APR-93	GROSS BETA	29.700	-	.000	pCi/g
1971	112593	9.5 - 11	15-APR-93	U-TOTAL	5.680	-	2.540	mg/kg
1971	112593	9.5 - 11	15-APR-93	PU-239/240	.021	J	.000	pCi/g
1971	112593	9.5 - 11	15-APR-93	SR-90	1.780	J	.560	pCi/g
1972	110382	.5 - 1	19-MAR-93	CS-137	.547	-	.000	pCi/g
1972	110382	.5 - 1	19-MAR-93	U-TOTAL	36.200	-	2.540	mg/kg
1972	110382	.5 - 1	19-MAR-93	U-238	8.090	-	1.122	pCi/g
1972	110382	.5 - 1	19-MAR-93	U-235/236	.287	-	.142	pCi/g
1972	110382	.5 - 1	19-MAR-93	U-234	7.480	-	1.034	pCi/g
1972	110382	.5 - 1	19-MAR-93	GROSS ALPHA	267.000	J	.000	pCi/g
1972	110382	.5 - 1	19-MAR-93	GROSS BETA	95.800	J	.000	pCi/g
1972	110382	.5 - 1	19-MAR-93	RA-226	31.200	-	1.470	pCi/g
1972	110382	.5 - 1	19-MAR-93	RA-228	2.070	-	1.325	pCi/g
1972	110382	.5 - 1	19-MAR-93	PU-238	.059	J	.000	pCi/g
1972	110584	2.5 - 4	08-APR-93	GROSS ALPHA	62.700	-	.000	pCi/g
1972	110584	2.5 - 4	08-APR-93	NP-237	.369	N	.000	pCi/g
1972	110584	2.5 - 4	08-APR-93	U-TOTAL	47.600	-	2.540	mg/kg
1972	110584	2.5 - 4	08-APR-93	U-238	15.700	-	1.122	pCi/g
1972	110584	2.5 - 4	08-APR-93	U-235/236	.830	-	.142	pCi/g

TABLE F-2C
(Continued)

SAMPLE LOCATION	SAMPLE ID	SAMPLE INTERVALS	SAMPLE DATE	PARAMETER	RESULTS	VAL QUAL	Background Concentration	UNITS
RADIONUCLIDES (Continued)								
1972	110584	2.5 - 4	08-APR-93	U-234	15.200	-	1.034	pCi/g
1972	110584	2.5 - 4	08-APR-93	TH-230	4.180	-	1.897	pCi/g
1972	110584	2.5 - 4	08-APR-93	SR-90	1.280	J	.560	pCi/g
1972	110584	2.5 - 4	08-APR-93	RA-226	5.140	-	1.470	pCi/g
1972	110584	2.5 - 4	08-APR-93	GROSS BETA	51.200	-	.000	pCi/g
1972	112494	7.5 - 9	08-APR-93	GROSS ALPHA	29.000	-	.000	pCi/g
1972	112494	7.5 - 9	08-APR-93	GROSS BETA	26.700	-	.000	pCi/g
1972	112494	7.5 - 9	08-APR-93	NP-237	.291	N	.000	pCi/g
1972	112494	7.5 - 9	08-APR-93	PU-238	.029	J	.000	pCi/g
1972	112494	7.5 - 9	08-APR-93	U-TOTAL	14.400	-	2.540	mg/kg
1972	112494	7.5 - 9	08-APR-93	U-238	5.000	-	1.122	pCi/g
1972	112494	7.5 - 9	08-APR-93	U-235/236	.260	J	.142	pCi/g
1972	112494	7.5 - 9	08-APR-93	U-234	4.480	-	1.034	pCi/g
1972	112494	7.5 - 9	08-APR-93	PU-239/240	.030	J	.000	pCi/g
1973	110413	.5 - 1	24-MAR-93	GROSS ALPHA	52.500	-	.000	pCi/g
1973	110413	.5 - 1	24-MAR-93	GROSS BETA	62.600	J	.000	pCi/g
1973	110413	.5 - 1	24-MAR-93	PU-238	.042	J	.000	pCi/g
1973	110413	.5 - 1	24-MAR-93	U-TOTAL	29.000	-	2.540	mg/kg
1973	110413	.5 - 1	24-MAR-93	U-238	9.320	-	1.122	pCi/g
1973	110413	.5 - 1	24-MAR-93	U-235/236	.428	J	.142	pCi/g
1973	110413	.5 - 1	24-MAR-93	U-234	9.220	-	1.034	pCi/g
1973	110413	.5 - 1	24-MAR-93	TH-230	3.190	-	1.897	pCi/g
1973	110413	.5 - 1	24-MAR-93	RA-226	3.010	-	1.470	pCi/g
1973	110413	.5 - 1	24-MAR-93	PU-239/240	.031	J	.000	pCi/g
1973	110413	.5 - 1	24-MAR-93	NP-237	.167	N	.000	pCi/g
1974	110415	.5 - 1	24-MAR-93	CS-137	.165	-	.000	pCi/g
1974	110415	.5 - 1	24-MAR-93	U-TOTAL	91.500	-	2.540	mg/kg
1974	110415	.5 - 1	24-MAR-93	TH-232	1.520	-	1.269	pCi/g
1974	110415	.5 - 1	24-MAR-93	TH-230	3.010	-	1.897	pCi/g
1974	110415	.5 - 1	24-MAR-93	TH-228	2.090	-	1.341	pCi/g
1974	110415	.5 - 1	24-MAR-93	RA-228	2.230	-	1.325	pCi/g
1974	110415	.5 - 1	24-MAR-93	RA-226	1.640	-	1.470	pCi/g
1974	110415	.5 - 1	24-MAR-93	PU-239/240	.026	J	.000	pCi/g
1974	110415	.5 - 1	24-MAR-93	PU-238	.042	J	.000	pCi/g
1974	110415	.5 - 1	24-MAR-93	NP-237	.142	N	.000	pCi/g
1974	110415	.5 - 1	24-MAR-93	U-238	29.300	-	1.122	pCi/g
1974	110415	.5 - 1	24-MAR-93	U-235/236	1.450	-	.142	pCi/g
1974	110415	.5 - 1	24-MAR-93	U-234	29.700	-	1.034	pCi/g
1974	110415	.5 - 1	24-MAR-93	TH-TOTAL	13.800	-	9.470	mg/kg
1974	110415	.5 - 1	24-MAR-93	GROSS ALPHA	78.900	-	.000	pCi/g
1974	110415	.5 - 1	24-MAR-93	GROSS BETA	68.000	J	.000	pCi/g
1975	110389	.5 - 1	22-MAR-93	GROSS ALPHA	51.400	-	.000	pCi/g
1975	110389	.5 - 1	22-MAR-93	U-TOTAL	29.700	J	2.540	mg/kg

0527

P 5174

TABLE F-2C
(Continued)

SAMPLE LOCATION	SAMPLE ID	SAMPLE INTERVALS	SAMPLE DATE	PARAMETER	RESULTS	VAL QUAL	Background Concentration	UNITS
RADIONUCLIDES (Continued)								
1975	110389	.5 - 1	22-MAR-93	U-238	10.200	-	1.122	pCi/g
1975	110389	.5 - 1	22-MAR-93	U-235/236	.440	J	.142	pCi/g
1975	110389	.5 - 1	22-MAR-93	U-234	9.860	-	1.034	pCi/g
1975	110389	.5 - 1	22-MAR-93	PU-238	.050	J	.000	pCi/g
1975	110389	.5 - 1	22-MAR-93	TH-230	4.060	-	1.897	pCi/g
1975	110389	.5 - 1	22-MAR-93	RA-226	1.510	-	1.470	pCi/g
1975	110389	.5 - 1	22-MAR-93	GROSS BETA	45.500	-	.000	pCi/g
1975	112545	4 - 5	13-APR-93	GROSS ALPHA	16.900	-	.000	pCi/g
1975	112545	4 - 5	13-APR-93	U-TOTAL	11.600	-	2.540	mg/kg
1975	112545	4 - 5	13-APR-93	U-238	2.740	-	1.122	pCi/g
1975	112545	4 - 5	13-APR-93	U-234	2.490	-	1.034	pCi/g
1975	112545	4 - 5	13-APR-93	TH-TOTAL	10.700	-	9.470	mg/kg
1975	112545	4 - 5	13-APR-93	SR-90	1.570	-	.560	pCi/g
1975	112545	4 - 5	13-APR-93	RA-228	1.420	-	1.325	pCi/g
1975	112545	4 - 5	13-APR-93	PU-239/240	.021	J	.000	pCi/g
1975	112545	4 - 5	13-APR-93	PU-238	.049	J	.000	pCi/g
1975	112545	4 - 5	13-APR-93	GROSS BETA	32.300	-	.000	pCi/g
1975	112545	4 - 5	13-APR-93	NP-237	.269	N	.000	pCi/g
1975	112550	8.5 - 10.5	13-APR-93	GROSS ALPHA	13.000	-	.000	pCi/g
1975	112550	8.5 - 10.5	13-APR-93	PU-238	.167	J	.000	pCi/g
1975	112550	8.5 - 10.5	13-APR-93	U-TOTAL	4.820	-	2.540	mg/kg
1975	112550	8.5 - 10.5	13-APR-93	NP-237	.306	N	.000	pCi/g
1975	112550	8.5 - 10.5	13-APR-93	GROSS BETA	24.000	-	.000	pCi/g
1977	110571	8.5 - 10	06-APR-93	CS-137	.070	J	.000	pCi/g
1977	110571	8.5 - 10	06-APR-93	U-TOTAL	35.900	-	2.540	mg/kg
1977	110571	8.5 - 10	06-APR-93	U-238	10.400	-	1.122	pCi/g
1977	110571	8.5 - 10	06-APR-93	U-235/236	.580	J	.142	pCi/g
1977	110571	8.5 - 10	06-APR-93	U-234	9.370	-	1.034	pCi/g
1977	110571	8.5 - 10	06-APR-93	PU-239/240	.030	J	.000	pCi/g
1977	110571	8.5 - 10	06-APR-93	PU-238	.050	J	.000	pCi/g
1977	110571	8.5 - 10	06-APR-93	NP-237	.440	N	.000	pCi/g
1977	110571	8.5 - 10	06-APR-93	GROSS BETA	36.500	-	.000	pCi/g
1977	110571	8.5 - 10	06-APR-93	GROSS ALPHA	28.200	-	.000	pCi/g
1977	110579	16.5 - 18.5	07-APR-93	GROSS ALPHA	19.600	-	.000	pCi/g
1977	110579	16.5 - 18.5	07-APR-93	NP-237	.112	N	.000	pCi/g
1977	110579	16.5 - 18.5	07-APR-93	GROSS BETA	21.000	-	.000	pCi/g
1977	110579	16.5 - 18.5	07-APR-93	SR-90	.590	J	.560	pCi/g
1977	110579	16.5 - 18.5	07-APR-93	U-TOTAL	3.500	J	2.540	mg/kg
1977	110579	16.5 - 18.5	07-APR-93	U-234	1.090	-	1.034	pCi/g
1977	110579	16.5 - 18.5	07-APR-93	PU-238	.023	J	.000	pCi/g
1978	110406	.5 - 1	24-MAR-93	GROSS ALPHA	23.600	-	.000	pCi/g
1978	110406	.5 - 1	24-MAR-93	GROSS BETA	38.400	J	.000	pCi/g
1978	110406	.5 - 1	24-MAR-93	U-TOTAL	10.700	-	2.540	mg/kg

TABLE F-2C
(Continued)

SAMPLE LOCATION	SAMPLE ID	SAMPLE INTERVALS	SAMPLE DATE	PARAMETER	RESULTS	VAL QUAL	Background Concentration	UNITS
RADIONUCLIDES (Continued)								
1978	110406	.5 - 1	24-MAR-93	U-238	3.460	-	1.122	pCi/g
1978	110406	.5 - 1	24-MAR-93	U-235/236	.169	J	.142	pCi/g
1978	110406	.5 - 1	24-MAR-93	U-234	3.190	-	1.034	pCi/g
1978	110406	.5 - 1	24-MAR-93	PU-238	.047	J	.000	pCi/g
1978	110406	.5 - 1	24-MAR-93	NP-237	.219	N	.000	pCi/g
1978	112584	9.5 - 11	16-APR-93	GROSS ALPHA	18.600	-	.000	pCi/g
1978	112584	9.5 - 11	16-APR-93	NP-237	.046	N	.000	pCi/g
1978	112584	9.5 - 11	16-APR-93	GROSS BETA	34.300	-	.000	pCi/g
1978	112584	9.5 - 11	16-APR-93	U-TOTAL	5.760	-	2.540	mg/kg
1978	112584	9.5 - 11	16-APR-93	SR-90	.570	J	.560	pCi/g
1978	112584	9.5 - 11	16-APR-93	RA-228	1.410	-	1.325	pCi/g
1978	112584	9.5 - 11	16-APR-93	PU-238	.735	J	.000	pCi/g
1978	112588	13.5 - 15	16-APR-93	GROSS ALPHA	18.700	-	.000	pCi/g
1978	112588	13.5 - 15	16-APR-93	GROSS BETA	20.500	-	.000	pCi/g
1978	112588	13.5 - 15	16-APR-93	U-TOTAL	4.740	-	2.540	mg/kg
SF-SS-19	110369	.5 - 1	22-MAR-93	CS-137	.334	-	.000	pCi/g
SF-SS-19	110369	.5 - 1	22-MAR-93	GROSS BETA	33.800	-	.000	pCi/g
SF-SS-19	110369	.5 - 1	22-MAR-93	U-TOTAL	12.500	-	2.540	mg/kg
SF-SS-19	110369	.5 - 1	22-MAR-93	U-238	3.990	-	1.122	pCi/g
SF-SS-19	110369	.5 - 1	22-MAR-93	U-235/236	.150	J	.142	pCi/g
SF-SS-19	110369	.5 - 1	22-MAR-93	U-234	3.220	-	1.034	pCi/g
SF-SS-19	110369	.5 - 1	22-MAR-93	TH-230	1.930	-	1.897	pCi/g
SF-SS-19	110369	.5 - 1	22-MAR-93	SR-90	.894	J	.560	pCi/g
SF-SS-19	110369	.5 - 1	22-MAR-93	PU-239/240	.048	J	.000	pCi/g
SF-SS-19	110369	.5 - 1	22-MAR-93	NP-237	.076	N	.000	pCi/g
SF-SS-19	110369	.5 - 1	22-MAR-93	GROSS ALPHA	25.600	-	.000	pCi/g
TRENCH #1	113105	0 - 7	28-MAY-93	CS-137	.110	J	.000	pCi/g
TRENCH #1	113105	0 - 7	28-MAY-93	GROSS BETA	91.600	-	.000	pCi/g
TRENCH #1	113105	0 - 7	28-MAY-93	GROSS ALPHA	104.000	-	.000	pCi/g
TRENCH #1	113105	0 - 7	28-MAY-93	RA-226	1.770	-	1.470	pCi/g
TRENCH #1	113105	0 - 7	28-MAY-93	U-TOTAL	165.000	-	2.540	mg/kg
TRENCH #1	113105	0 - 7	28-MAY-93	U-234	44.500	-	1.034	pCi/g
TRENCH #1	113105	0 - 7	28-MAY-93	TH-TOTAL	28.900	J	9.470	mg/kg
TRENCH #1	113105	0 - 7	28-MAY-93	TH-232	3.180	J	1.269	pCi/g
TRENCH #1	113105	0 - 7	28-MAY-93	TH-230	6.270	J	1.897	pCi/g
TRENCH #1	113105	0 - 7	28-MAY-93	TH-228	2.550	J	1.341	pCi/g
TRENCH #1	113105	0 - 7	28-MAY-93	RA-228	3.740	-	1.325	pCi/g
TRENCH #1	113105	0 - 7	28-MAY-93	PU-238	.040	J	.000	pCi/g
TRENCH #1	113105	0 - 7	28-MAY-93	NP-237	.120	N	.000	pCi/g
TRENCH #1	113105	0 - 7	28-MAY-93	U-238	46.800	-	1.122	pCi/g
TRENCH #1	113105	0 - 7	28-MAY-93	U-235/236	2.620	-	.142	pCi/g
TRENCH 2 SF	113724	-		RA-226	9.21	-	1.470	pCi/g
TRENCH 2 SF	113724	-		RA-228	1.65	-	1.325	pCi/g

0529

5174

TABLE F-2C
(Continued)

SAMPLE LOCATION	SAMPLE ID	SAMPLE INTERVALS	SAMPLE DATE	PARAMETER	RESULTS	VAL QUAL	Background Concentration	UNITS
RADIONUCLIDES (Continued)								
TRENCH 2 SF	113724	-		TH-228	13.4	-	1.341	pCi/g
TRENCH 2 SF	113724	-		TH-230	37.6	-	1.897	pCi/g
TRENCH 2 SF	113724	-		TH-232	12.9	-	1.269	pCi/g
TRENCH 2 SF	113724	-		U-234	228	-	1.034	pCi/g
TRENCH 2 SF	113724	-		U-235/236	11.9	-	0.142	pCi/g
TRENCH 2 SF	113724	-		U-238	241	-	1.122	pCi/g
TRENCH 2 SF	113724	-		U-TOTAL	725	-	2.540	mg/kg
TRENCH 2 SF	113724	-		RA-228	675	-	1.325	pCi/g
TRENCH 2 SF	113724	-		TH-228	595	-	1.341	pCi/g
TRENCH 2 SF	113724	-		TH-230	51.6	-	1.897	pCi/g
TRENCH 2 SF	113724	-		TH-232	600	-	1.269	pCi/g
TRENCH 2 SF	113724	-		U-234	17.7	-	1.034	pCi/g
TRENCH 2 SF	113724	-		U-235/236	1.25	-	1.142	pCi/g
TRENCH 2 SF	113724	-		U-238	18.0	-	1.122	pCi/g
TRENCH 4 SF	113722	0 - 3.42	16-JUN-93	GROSS ALPHA	242.000	J	.000	pCi/g
TRENCH 4 SF	113722	0 - 3.42	16-JUN-93	RA-226	5.760	-	1.470	pCi/g
TRENCH 4 SF	113722	0 - 3.42	16-JUN-93	GROSS BETA	530.000	J	.000	pCi/g
TRENCH 4 SF	113722	0 - 3.42	16-JUN-93	U-TOTAL	1170.000	-	2.540	mg/kg
TRENCH 4 SF	113722	0 - 3.42	16-JUN-93	U-238	397.000	N	1.122	pCi/g
TRENCH 4 SF	113722	0 - 3.42	16-JUN-93	U-235/236	19.700	N	.142	pCi/g
TRENCH 4 SF	113722	0 - 3.42	16-JUN-93	U-234	378.000	N	1.034	pCi/g
VOLATILE ORGANICS								
11188	110547	4.5 - 6	02-APR-93	Acetone	4.000	J	.000	ug/kg
11188	110547	4.5 - 6	02-APR-93	Toluene	41.000	-	.000	ug/kg
11188	110556	10 - 11	02-APR-93	2-Butanone	6.000	J	.000	ug/kg
11188	110556	10 - 11	02-APR-93	Toluene	8.000	J	.000	ug/kg
11188	110556	10 - 11	02-APR-93	Acetone	45.000	J	.000	ug/kg
1964	112648	5 - 6.5	17-APR-93	Acetone	7.000	J	.000	ug/kg
1964	112648	5 - 6.5	17-APR-93	Toluene	3.000	J	.000	ug/kg
1964	112685	29 - 30.5	17-APR-93	2-Butanone	1.000	J	.000	ug/kg
1964	112685	29 - 30.5	17-APR-93	Toluene	20.000	-	.000	ug/kg
1965	112737	4 - 6	20-APR-93	Toluene	3.000	J	.000	ug/kg
1965	112763	26.5 - 28	21-APR-93	Toluene	1.000	J	.000	ug/kg
1966	112859	4.5 - 6.5	21-APR-93	Toluene	11.000	J	.000	ug/kg
1967	112696	4.5 - 7.5	18-APR-93	Toluene	39.000	-	.000	ug/kg
1967	112731	29.5 - 31	19-APR-93	Toluene	2.000	J	.000	ug/kg
1968	112835	4.5 - 6.5	20-APR-93	2-Butanone	11.000	J	.000	ug/kg
1968	112835	4.5 - 6.5	20-APR-93	Acetone	56.000	-	.000	ug/kg
1968	112835	4.5 - 6.5	20-APR-93	Toluene	4.000	J	.000	ug/kg
1968	112849	15.5 - 16.5	20-APR-93	Acetone	3.000	J	.000	ug/kg
1968	112849	15.5 - 16.5	20-APR-93	Toluene	52.000	-	.000	ug/kg
1969	112563	9 - 10.5	15-APR-93	Toluene	17.000	-	.000	ug/kg

TABLE F-2C
(Continued)

SAMPLE LOCATION	SAMPLE ID	SAMPLE INTERVALS	SAMPLE DATE	PARAMETER	RESULTS	VAL QUAL	Background Concentration	UNITS
VOLATILE ORGANICS (Continued)								
1970	112690	4 - 5.5	18-APR-93	Toluene	1.000	J	.000	ug/kg
1970	112893	9 - 10.5	18-APR-93	Acetone	5.000	J	.000	ug/kg
1971	112593	9.5 - 11	15-APR-93	Acetone	3.000	J	.000	ug/kg
1971	112593	9.5 - 11	15-APR-93	Toluene	3.000	J	.000	ug/kg
1972	110584	2.5 - 4	08-APR-93	Acetone	6.000	J	.000	ug/kg
1972	110584	2.5 - 4	08-APR-93	Toluene	11.000	J	.000	ug/kg
1972	112494	7.5 - 9	08-APR-93	Acetone	3.000	J	.000	ug/kg
1977	110571	8.5 - 10	06-APR-93	Acetone	8.000	J	.000	ug/kg
1977	110571	8.5 - 10	06-APR-93	Toluene	2.000	J	.000	ug/kg
1977	110579	16.5 - 18.5	07-APR-93	2-Butanone	2.000	J	.000	ug/kg
1977	110579	16.5 - 18.5	07-APR-93	Carbon disulfide	4.000	J	.000	ug/kg
1977	110579	16.5 - 18.5	07-APR-93	Toluene	31.000	-	.000	ug/kg
1977	110579	16.5 - 18.5	07-APR-93	Acetone	14.000	-	.000	ug/kg
1978	110406	.5 - 1	24-MAR-93	Toluene	1.000	J	.000	ug/kg
1978	112584	9.5 - 11	16-APR-93	Acetone	5.000	J	.000	ug/kg
1978	112588	13.5 - 15	16-APR-93	Acetone	3.000	J	.000	ug/kg
TRENCH 4 SF	113722	0 - 3.42	16-JUN-93	Carbon disulfide	2.000	J	.000	ug/kg
SEMIVOLATILE ORGANICS								
11187	112520	4 - 6	13-APR-93	Fluoranthene	110.000	J	.000	ug/kg
1964	112685	29 - 30.5	17-APR-93	bis(2-Ethylhexyl) phthalate	68.000	J	.000	ug/kg
1965	112737	4 - 6	20-APR-93	bis(2-Ethylhexyl) phthalate	44.000	J	.000	ug/kg
1966	110405	.5 - 1	24-MAR-93	2-Methylnaphthalene	91.000	J	.000	ug/kg
1966	110405	.5 - 1	24-MAR-93	Pyrene	44.000	J	.000	ug/kg
1966	110405	.5 - 1	24-MAR-93	Phenanthrene	85.000	J	.000	ug/kg
1966	110405	.5 - 1	24-MAR-93	Naphthalene	61.000	J	.000	ug/kg
1966	110405	.5 - 1	24-MAR-93	Chrysene	53.000	J	.000	ug/kg
1967	110362	.5 - 1	22-MAR-93	Benzoic acid	45.000	J	.000	ug/kg
1967	110362	.5 - 1	22-MAR-93	bis(2-Ethylhexyl) phthalate	96.000	J	.000	ug/kg
1967	112696	4.5 - 7.5	18-APR-93	bis(2-Ethylhexyl) phthalate	49.000	J	.000	ug/kg
1967	112731	29.5 - 31	19-APR-93	Benzoic acid	44.000	J	.000	ug/kg
1968	110396	.5 - 1	22-MAR-93	Benzo(a)anthracene	44.000	J	.000	ug/kg
1968	110396	.5 - 1	22-MAR-93	bis(2-Ethylhexyl) phthalate	51.000	J	.000	ug/kg
1968	110396	.5 - 1	22-MAR-93	Pyrene	76.000	J	.000	ug/kg
1968	110396	.5 - 1	22-MAR-93	Phenanthrene	52.000	J	.000	ug/kg
1968	110396	.5 - 1	22-MAR-93	Fluoranthene	96.000	J	.000	ug/kg
1968	110396	.5 - 1	22-MAR-93	Chrysene	58.000	J	.000	ug/kg
1968	110396	.5 - 1	22-MAR-93	Benzo(b)fluoranthene	42.000	J	.000	ug/kg
1969	110339	.5 - 1	22-MAR-93	Benzoic acid	57.000	J	.000	ug/kg
1969	110339	.5 - 1	22-MAR-93	bis(2-Ethylhexyl) phthalate	110.000	J	.000	ug/kg
1970	112690	4 - 5.5	18-APR-93	Benzoic acid	46.000	J	.000	ug/kg
1970	112690	4 - 5.5	18-APR-93	bis(2-Ethylhexyl) phthalate	56.000	J	.000	ug/kg
1971	110327	.5 - 1	22-MAR-93	bis(2-Ethylhexyl) phthalate	100.000	J	.000	ug/kg

0531

5174

TABLE F-2C
(Continued)

SAMPLE LOCATION	SAMPLE ID	SAMPLE INTERVALS	SAMPLE DATE	PARAMETER	RESULTS	VAL QUAL	Background Concentration	UNITS
SEMIVOLATILE ORGANICS (Continued)								
1972	110382	.5 - 1	19-MAR-93	Acenaphthylene	410.000	-	.000	ug/kg
1972	110382	.5 - 1	19-MAR-93	bis(2-Ethylhexyl) phthalate	87.000	J	.000	ug/kg
1972	110382	.5 - 1	19-MAR-93	Pyrene	1400.000	-	.000	ug/kg
1972	110382	.5 - 1	19-MAR-93	Phenanthrene	350.000	J	.000	ug/kg
1972	110382	.5 - 1	19-MAR-93	Indeno(1,2,3-cd)pyrene	210.000	J	.000	ug/kg
1972	110382	.5 - 1	19-MAR-93	Fluoranthene	1800.000	-	.000	ug/kg
1972	110382	.5 - 1	19-MAR-93	Dibenzo(a,h)anthracene	440.000	-	.000	ug/kg
1972	110382	.5 - 1	19-MAR-93	Chrysene	1400.000	-	.000	ug/kg
1972	110382	.5 - 1	19-MAR-93	Carbazole	51.000	J	.000	ug/kg
1972	110382	.5 - 1	19-MAR-93	Benzo(a)pyrene	1800.000	-	.000	ug/kg
1972	110382	.5 - 1	19-MAR-93	Benzo(k)fluoranthene	1600.000	-	.000	ug/kg
1972	110382	.5 - 1	19-MAR-93	Benzo(g,h,i)perylene	1200.000	-	.000	ug/kg
1972	110382	.5 - 1	19-MAR-93	Benzo(b)fluoranthene	1600.000	-	.000	ug/kg
1972	110382	.5 - 1	19-MAR-93	Anthracene	250.000	J	.000	ug/kg
1972	110382	.5 - 1	19-MAR-93	Benzo(a)anthracene	1100.000	-	.000	ug/kg
1973	110413	.5 - 1	24-MAR-93	Benzo(a)anthracene	57.000	J	.000	ug/kg
1973	110413	.5 - 1	24-MAR-93	Pyrene	120.000	J	.000	ug/kg
1973	110413	.5 - 1	24-MAR-93	Phenanthrene	61.000	J	.000	ug/kg
1973	110413	.5 - 1	24-MAR-93	Fluoranthene	130.000	J	.000	ug/kg
1973	110413	.5 - 1	24-MAR-93	Chrysene	82.000	J	.000	ug/kg
1973	110413	.5 - 1	24-MAR-93	Benzo(k)fluoranthene	57.000	J	.000	ug/kg
1973	110413	.5 - 1	24-MAR-93	Benzo(a)pyrene	51.000	J	.000	ug/kg
1974	110415	.5 - 1	24-MAR-93	Benzo(a)pyrene	41.000	J	.000	ug/kg
1974	110415	.5 - 1	24-MAR-93	Benzo(k)fluoranthene	48.000	J	.000	ug/kg
1974	110415	.5 - 1	24-MAR-93	Pyrene	79.000	J	.000	ug/kg
1974	110415	.5 - 1	24-MAR-93	bis(2-Ethylhexyl) phthalate	55.000	J	.000	ug/kg
1974	110415	.5 - 1	24-MAR-93	Fluoranthene	83.000	J	.000	ug/kg
1975	110389	.5 - 1	22-MAR-93	bis(2-Ethylhexyl) phthalate	51.000	J	.000	ug/kg
1975	112545	4 - 5	13-APR-93	bis(2-Ethylhexyl) phthalate	71.000	J	.000	ug/kg
1978	110406	.5 - 1	24-MAR-93	Benzo(a)pyrene	3.000	J	.000	ug/kg
1978	110406	.5 - 1	24-MAR-93	bis(2-Ethylhexyl) phthalate	46.000	J	.000	ug/kg
1978	112584	9.5 - 11	16-APR-93	Benzo(g,h,i)perylene	76.000	J	.000	ug/kg
SF-SS-19	110369	.5 - 1	22-MAR-93	Benzo(a)anthracene	97.000	J	.000	ug/kg
SF-SS-19	110369	.5 - 1	22-MAR-93	Benzo(a)pyrene	110.000	J	.000	ug/kg
SF-SS-19	110369	.5 - 1	22-MAR-93	Benzo(g,h,i)perylene	79.000	J	.000	ug/kg
SF-SS-19	110369	.5 - 1	22-MAR-93	Chrysene	140.000	J	.000	ug/kg
SF-SS-19	110369	.5 - 1	22-MAR-93	Phenanthrene	80.000	J	.000	ug/kg
SF-SS-19	110369	.5 - 1	22-MAR-93	bis(2-Ethylhexyl) phthalate	88.000	J	.000	ug/kg
SF-SS-19	110369	.5 - 1	22-MAR-93	Pyrene	170.000	J	.000	ug/kg
SF-SS-19	110369	.5 - 1	22-MAR-93	Indeno(1,2,3-cd)pyrene	77.000	J	.000	ug/kg
SF-SS-19	110369	.5 - 1	22-MAR-93	Fluoranthene	210.000	J	.000	ug/kg
SF-SS-19	110369	.5 - 1	22-MAR-93	Benzo(k)fluoranthene	110.000	J	.000	ug/kg
SF-SS-19	110369	.5 - 1	22-MAR-93	Benzo(b)fluoranthene	110.000	J	.000	ug/kg

TABLE F-2C
(Continued)

SAMPLE LOCATION	SAMPLE ID	SAMPLE INTERVALS	SAMPLE DATE	PARAMETER	RESULTS	VAL QUAL	Background Concentration	UNITS
SEMIVOLATILE ORGANICS (Continued)								
TRENCH #1	113718	2 - 2	03-JUN-93	Anthracene	62.000	J	.000	ug/kg
TRENCH #1	113718	2 - 2	03-JUN-93	Indeno(1,2,3-cd)pyrene	42.000	J	.000	ug/kg
TRENCH #1	113718	2 - 2	03-JUN-93	Fluoranthene	140.000	J	.000	ug/kg
TRENCH #1	113718	2 - 2	03-JUN-93	Di-n-butyl phthalate	49.000	J	.000	ug/kg
TRENCH #1	113718	2 - 2	03-JUN-93	Benzo(k)fluoranthene	58.000	J	.000	ug/kg
TRENCH #1	113718	2 - 2	03-JUN-93	Benzo(g,h,i)perylene	52.000	J	.000	ug/kg
TRENCH #1	113718	2 - 2	03-JUN-93	Benzo(b)fluoranthene	58.000	J	.000	ug/kg
TRENCH #1	113718	2 - 2	03-JUN-93	Benzo(a)anthracene	60.000	J	.000	ug/kg
TRENCH #1	113718	2 - 2	03-JUN-93	Benzo(a)pyrene	59.000	J	.000	ug/kg
TRENCH #1	113718	2 - 2	03-JUN-93	bis(2-Ethylhexyl) phthalate	340.000	J	.000	ug/kg
TRENCH #1	113718	2 - 2	03-JUN-93	Tributyl phosphate	170.000	J	.000	ug/kg
TRENCH #1	113718	2 - 2	03-JUN-93	Pyrene	110.000	J	.000	ug/kg
TRENCH #1	113718	2 - 2	03-JUN-93	Phenanthrene	62.000	J	.000	ug/kg
PESTICIDES/PCBs								
11187	112520	4 - 6	13-APR-93	Aroclor-1254	86.000	J	.000	ug/kg
1965	112737	4 - 6	20-APR-93	Aroclor-1254	43.000	-	.000	ug/kg
1967	112696	4.5 - 7.5	18-APR-93	Aroclor-1254	85.000	-	.000	ug/kg
1968	110396	.5 - 1	22-MAR-93	Dieldrin	16.000	-	.000	ug/kg
1968	110396	.5 - 1	22-MAR-93	Endrin ketone	5.300	J	.000	ug/kg
1968	110396	.5 - 1	22-MAR-93	alpha-Chlordane	8.000	J	.000	ug/kg
1968	110396	.5 - 1	22-MAR-93	gamma-Chlordane	7.200	NJ	.000	ug/kg
1969	110339	.5 - 1	22-MAR-93	Aroclor-1254	54.000	-	.000	ug/kg
1972	110382	.5 - 1	19-MAR-93	Aroclor-1254	85.000	-	.000	ug/kg
1973	110413	.5 - 1	24-MAR-93	Aroclor-1254	82.000	-	.000	ug/kg
1974	110415	.5 - 1	24-MAR-93	Aroclor-1254	58.000	J	.000	ug/kg
1975	110389	.5 - 1	22-MAR-93	Aroclor-1254	140.000	-	.000	ug/kg
1975	112545	4 - 5	13-APR-93	Aroclor-1254	41.000	-	.000	ug/kg
1978	110406	.5 - 1	24-MAR-93	Aroclor-1254	47.000	-	.000	ug/kg
SF-SS-19	110369	.5 - 1	22-MAR-93	Aroclor-1260	89.000	J	.000	ug/kg
TRENCH #1	113718	2 - 2	03-JUN-93	Aroclor-1254	170.000	J	.000	ug/kg
TRENCH 4 SF	113722	0 - 3.42	16-JUN-93	Aroclor-1254	430.000	J	.000	ug/kg

TABLE F-2D

SOUTH FIELD
CONCENTRATIONS OF DETECTED ANALYTES
ABOVE BACKGROUND[a] IN SURFACE WATER
PHASE II FIELD INVESTIGATION
OPERABLE UNIT 2 REMEDIAL INVESTIGATION
FERNALD ENVIRONMENTAL MANAGEMENT PROJECT

SAMPLE LOCATION	SAMPLE ID	SAMPLE INTERVALS	SAMPLE DATE	PARAMETER	FILTER FLAG	RESULTS	VAL QUAL	BACKGROUND	UNITS
METALS									
SF-SW-01	110422	-	24-MAR-93	Aluminum	FLTR	.178	-	0	mg/L
SF-SW-01	110422	-	24-MAR-93	Barium	FLTR	.050	-	0	mg/L
SF-SW-01	110422	-	24-MAR-93	Magnesium	FLTR	30.000	-	0	mg/L
SF-SW-01	110422	-	24-MAR-93	Calcium	FLTR	103.000	-	0	mg/L
SF-SW-01	110422	-	24-MAR-93	Potassium	FLTR	1.270	-	0	mg/L
SF-SW-01	110422	-	24-MAR-93	Sodium	FLTR	4.260	-	0	mg/L
SF-SW-01	110422	-	24-MAR-93	Silicon	FLTR	4.220	-	0	mg/L
SF-SW-02	110432	-	25-MAR-93	Aluminum	FLTR	.183	-	0	mg/L
SF-SW-02	110432	-	25-MAR-93	Barium	FLTR	.054	-	0	mg/L
SF-SW-02	110432	-	25-MAR-93	Magnesium	FLTR	38.200	-	0	mg/L
SF-SW-02	110432	-	25-MAR-93	Potassium	FLTR	1.050	-	0	mg/L
SF-SW-02	110432	-	25-MAR-93	Calcium	FLTR	109.000	-	0	mg/L
SF-SW-02	110432	-	25-MAR-93	Silicon	FLTR	5.840	-	0	mg/L
SF-SW-02	110432	-	25-MAR-93	Sodium	FLTR	5.050	-	0	mg/L
RADIONUCLIDES									
SF-SW-01	110422	-	24-MAR-93	GROSS ALPHA	UNFL	205.000	-	0	pCi/L
SF-SW-01	110422	-	24-MAR-93	U-235/236	UNFL	7.470	-	0	pCi/L
SF-SW-01	110422	-	24-MAR-93	U-TOTAL	UNFL	340.000	-	0	ug/L
SF-SW-01	110422	-	24-MAR-93	U-238	UNFL	136.000	-	0	pCi/L
SF-SW-01	110422	-	24-MAR-93	U-234	UNFL	110.000	-	0	pCi/L
SF-SW-01	110422	-	24-MAR-93	GROSS BETA	UNFL	97.000	J	0	pCi/L
SF-SW-02	110432	-	25-MAR-93	GROSS ALPHA	UNFL	224.000	-	0	pCi/L
SF-SW-02	110432	-	25-MAR-93	U-234	UNFL	159.000	-	0	pCi/L
SF-SW-02	110432	-	25-MAR-93	GROSS BETA	UNFL	119.000	-	0	pCi/L
SF-SW-02	110432	-	25-MAR-93	U-TOTAL	UNFL	487.000	-	0	ug/L
SF-SW-02	110432	-	25-MAR-93	U-238	UNFL	174.000	-	0	pCi/L
SF-SW-02	110432	-	25-MAR-93	U-235/236	UNFL	7.400	-	0	pCi/L
GENERAL CHEMISTRY									
SF-SW-01	110422	-	24-MAR-93	Chloride	UNFL	3.700	-	0	mg/L
SF-SW-01	110422	-	24-MAR-93	Fluoride	UNFL	.400	-	0	mg/L
SF-SW-01	110422	-	24-MAR-93	Phosphorus	UNFL	.070	-	0	mg/L

See footnotes at end of table

TABLE F-2D
(Continued)

SAMPLE LOCATION	SAMPLE ID	SAMPLE INTERVALS	SAMPLE DATE	PARAMETER	FILTER FLAG	RESULTS	VAL QUAL	BACKGROUND	UNITS
GENERAL CHEMISTRY (Continued)									
SF-SW-01	110422	-	24-MAR-93	Sulfate	UNFL	71.740	-	0	mg/L
SF-SW-01	110422	-	24-MAR-93	Total Organic Carbon	UNFL	3.440	-	0	mg/L
SF-SW-01	110422	-	24-MAR-93	Total Kjeldahl Nitrogen	UNFL	.350	-	0	mg/L
SF-SW-01	110422	-	24-MAR-93	Total Organic Nitrogen	UNFL	.350	-	0	mg/L
SF-SW-02	110432	-	25-MAR-93	Chloride	UNFL	4.400	-	0	mg/L
SF-SW-02	110432	-	25-MAR-93	Fluoride	UNFL	.360	-	0	mg/L
SF-SW-02	110432	-	25-MAR-93	Sulfate	UNFL	87.610	-	0	mg/L
SF-SW-02	110432	-	25-MAR-93	Total Kjeldahl Nitrogen	UNFL	.220	-	0	mg/L
SF-SW-02	110432	-	25-MAR-93	Total Organic Carbon	UNFL	2.440	-	0	mg/L
SF-SW-02	110432	-	25-MAR-93	Total Organic Nitrogen	UNFL	.220	-	0	mg/L

[a]Zero background concentration has been used for surface water. Background data for surface water is not available at this time.

FLTR = Filtered sample; filtered status identified on Request for Analysis/Chain of Custody

UNFL = Unfiltered sample; filtered status identified on Request for Analysis/Chain of Custody

TABLE F-2E

SOUTH FIELD
CONCENTRATIONS OF DETECTED ANALYTES
ABOVE BACKGROUND IN SEDIMENT
PHASE II FIELD INVESTIGATION
OPERABLE UNIT 2 REMEDIAL INVESTIGATION
FERNALD ENVIRONMENTAL MANAGEMENT PROJECT

SAMPLE LOCATION	SAMPLE ID	SAMPLE INTERVALS	SAMPLE DATE	PARAMETER	RESULTS	VAL QUAL	BACKGROUND	UNITS
METALS								
SF-SD-01	110425	-	24-MAR-93	Calcium	22400.000	J	5296.781	mg/kg
SF-SD-01	110425	-	24-MAR-93	Magnesium	6460.000	-	1460	mg/kg
SF-SD-01	110425	-	24-MAR-93	Silver	2.900	-	0	mg/kg
SF-SD-01	110425	-	24-MAR-93	Sodium	67.100	-	55.145	mg/kg
SF-SD-01	110425	-	24-MAR-93	Selenium	.860	-	.72	mg/kg
SF-SD-02	110430	-	25-MAR-93	Barium	109.000	-	88.5	mg/kg
SF-SD-02	110430	-	25-MAR-93	Beryllium	1.100	-	.6	mg/kg
SF-SD-02	110430	-	25-MAR-93	Calcium	83500.000	J	5296.781	mg/kg
SF-SD-02	110430	-	25-MAR-93	Copper	25.400	-	15.7	mg/kg
SF-SD-02	110430	-	25-MAR-93	Molybdenum	6.300	J	0	mg/kg
SF-SD-02	110430	-	25-MAR-93	Zinc	68.700	J	58.5	mg/kg
SF-SD-02	110430	-	25-MAR-93	Sodium	155.000	-	55.145	mg/kg
SF-SD-02	110430	-	25-MAR-93	Silver	6.500	-	0	mg/kg
SF-SD-02	110430	-	25-MAR-93	Potassium	1460.000	-	1349.53	mg/kg
SF-SD-02	110430	-	25-MAR-93	Nickel	26.400	-	25.145	mg/kg
SF-SD-02	110430	-	25-MAR-93	Magnesium	20200.000	-	1460	mg/kg
SF-SD-02	110430	-	25-MAR-93	Lead	50.800	-	29.575	mg/kg
SF-SD-03	110428	-	25-MAR-93	Arsenic	75.600	-	11.608	mg/kg
SF-SD-03	110428	-	25-MAR-93	Chromium	19.200	-	17.057	mg/kg
SF-SD-03	110428	-	25-MAR-93	Copper	122.000	-	15.7	mg/kg
SF-SD-03	110428	-	25-MAR-93	Cobalt	19.400	-	16.913	mg/kg
SF-SD-03	110428	-	25-MAR-93	Cyanide	.540	-	.23	mg/kg
SF-SD-03	110428	-	25-MAR-93	Zinc	118.000	J	58.5	mg/kg
SF-SD-03	110428	-	25-MAR-93	Vanadium	53.600	-	33.693	mg/kg
SF-SD-03	110428	-	25-MAR-93	Thallium	4.400	-	.58	mg/kg
SF-SD-03	110428	-	25-MAR-93	Sodium	237.000	-	55.145	mg/kg
SF-SD-03	110428	-	25-MAR-93	Selenium	5.900	-	.72	mg/kg
SF-SD-03	110428	-	25-MAR-93	Potassium	1920.000	-	1349.53	mg/kg
SF-SD-03	110428	-	25-MAR-93	Nickel	36.400	-	25.145	mg/kg
SF-SD-03	110428	-	25-MAR-93	Magnesium	4510.000	-	1460	mg/kg
SF-SD-03	110428	-	25-MAR-93	Lead	91.500	-	29.575	mg/kg
SF-SD-03	110428	-	25-MAR-93	Calcium	19300.000	J	5296.781	mg/kg
SF-SD-03	110428	-	25-MAR-93	Barium	212.000	-	88.5	mg/kg
SF-SD-03	110428	-	25-MAR-93	Beryllium	4.600	-	.6	mg/kg

TABLE F-2E
(Continued)

SAMPLE LOCATION	SAMPLE ID	SAMPLE INTERVALS	SAMPLE DATE	PARAMETER	RESULTS	VAL QUAL	BACKGROUND	UNITS
RADIONUCLIDES								
SF-SD-01	110425	-	24-MAR-93	GROSS ALPHA	29.100	-	0	pCi/g
SF-SD-01	110425	-	24-MAR-93	GROSS BETA	58.200	J	0	pCi/g
SF-SD-01	110425	-	24-MAR-93	U-TOTAL	15.200	-	3.24	mg/kg
SF-SD-01	110425	-	24-MAR-93	U-238	5.210	-	1.27	pCi/g
SF-SD-01	110425	-	24-MAR-93	U-235/236	.255	J	.181	pCi/g
SF-SD-01	110425	-	24-MAR-93	U-234	3.620	-	1.319	pCi/g
SF-SD-01	110425	-	24-MAR-93	SR-90	.546	J	0	pCi/g
SF-SD-01	110425	-	24-MAR-93	RA-228	1.240	-	1.17	pCi/g
SF-SD-01	110425	-	24-MAR-93	RA-226	1.680	-	1.528	pCi/g
SF-SD-01	110425	-	24-MAR-93	PU-239/240	.067	J	0	pCi/g
SF-SD-01	110425	-	24-MAR-93	PU-238	.057	J	0	pCi/g
SF-SD-01	110425	-	24-MAR-93	NP-237	.323	N	0	pCi/g
SF-SD-02	110430	-	25-MAR-93	GROSS ALPHA	33.500	-	0	pCi/g
SF-SD-02	110430	-	25-MAR-93	PU-238	.100	J	0	pCi/g
SF-SD-02	110430	-	25-MAR-93	NP-237	.280	N	0	pCi/g
SF-SD-02	110430	-	25-MAR-93	TH-230	8.960	-	2.112	pCi/g
SF-SD-02	110430	-	25-MAR-93	U-238	6.210	-	1.27	pCi/g
SF-SD-02	110430	-	25-MAR-93	U-TOTAL	20.000	J	3.24	mg/kg
SF-SD-02	110430	-	25-MAR-93	U-235/236	.290	J	.181	pCi/g
SF-SD-02	110430	-	25-MAR-93	U-234	5.130	-	1.319	pCi/g
SF-SD-02	110430	-	25-MAR-93	RA-226	1.570	-	1.528	pCi/g
SF-SD-02	110430	-	25-MAR-93	GROSS BETA	32.600	-	0	pCi/g
SF-SD-03	110428	-	25-MAR-93	GROSS ALPHA	61.400	-	0	pCi/g
SF-SD-03	110428	-	25-MAR-93	U-TOTAL	30.100	J	3.24	mg/kg
SF-SD-03	110428	-	25-MAR-93	U-238	8.750	-	1.27	pCi/g
SF-SD-03	110428	-	25-MAR-93	U-235/236	.410	J	.181	pCi/g
SF-SD-03	110428	-	25-MAR-93	U-234	7.950	-	1.319	pCi/g
SF-SD-03	110428	-	25-MAR-93	TH-TOTAL	23.400	-	10.7	mg/kg
SF-SD-03	110428	-	25-MAR-93	TH-232	2.570	-	1.469	pCi/g
SF-SD-03	110428	-	25-MAR-93	TH-230	4.910	-	2.112	pCi/g
SF-SD-03	110428	-	25-MAR-93	TH-228	2.800	-	1.519	pCi/g
SF-SD-03	110428	-	25-MAR-93	SR-90	1.010	J	0	pCi/g
SF-SD-03	110428	-	25-MAR-93	RA-228	2.530	-	1.17	pCi/g
SF-SD-03	110428	-	25-MAR-93	RA-226	2.960	-	1.528	pCi/g
SF-SD-03	110428	-	25-MAR-93	PU-238	1.900	-	0	pCi/g
SF-SD-03	110428	-	25-MAR-93	NP-237	.420	N	0	pCi/g
SF-SD-03	110428	-	25-MAR-93	GROSS BETA	36.200	-	0	pCi/g
SF-SD-03	110428	-	25-MAR-93	PU-239/240	.370	J	0	pCi/g
VOLATILE ORGANICS								
SF-SD-03	110428	-	25-MAR-93	Toluene	8.000	J	0	ug/kg

0537
5174

TABLE F-2E
(Continued)

SAMPLE LOCATION	SAMPLE ID	SAMPLE INTERVALS	SAMPLE DATE	PARAMETER	RESULTS	VAL QUAL	BACKGROUND	UNITS
SEMIVOLATILE ORGANICS								
SF-SD-01	110425	-	24-MAR-93	Chrysene	87.000	J	0	ug/kg
SF-SD-01	110425	-	24-MAR-93	bis(2-Ethylhexyl) phthalate	74.000	J	0	ug/kg
SF-SD-01	110425	-	24-MAR-93	Fluoranthene	130.000	J	0	ug/kg
SF-SD-01	110425	-	24-MAR-93	Phenanthrene	63.000	J	0	ug/kg
SF-SD-01	110425	-	24-MAR-93	Pyrene	110.000	J	0	ug/kg
SF-SD-02	110430	-	25-MAR-93	Benzo(a)anthracene	66.000	J	0	ug/kg
SF-SD-02	110430	-	25-MAR-93	Benzo(g,h,i)perylene	120.000	J	0	ug/kg
SF-SD-02	110430	-	25-MAR-93	bis(2-Ethylhexyl) phthalate	120.000	J	0	ug/kg
SF-SD-02	110430	-	25-MAR-93	Pyrene	110.000	J	0	ug/kg
SF-SD-02	110430	-	25-MAR-93	Phenol	56.000	J	0	ug/kg
SF-SD-02	110430	-	25-MAR-93	Indeno(1,2,3-cd)pyrene	99.000	J	0	ug/kg
SF-SD-02	110430	-	25-MAR-93	Fluoranthene	120.000	J	0	ug/kg
SF-SD-02	110430	-	25-MAR-93	Chrysene	110.000	J	0	ug/kg
SF-SD-02	110430	-	25-MAR-93	Benzo(k)fluoranthene	120.000	J	0	ug/kg
SF-SD-02	110430	-	25-MAR-93	Benzoic acid	160.000	J	0	ug/kg
SF-SD-02	110430	-	25-MAR-93	Benzo(b)fluoranthene	110.000	J	0	ug/kg
SF-SD-02	110430	-	25-MAR-93	Benzo(a)pyrene	110.000	J	0	ug/kg
SF-SD-03	110428	-	25-MAR-93	Benzo(k)fluoranthene	74.000	J	0	ug/kg
SF-SD-03	110428	-	25-MAR-93	Benzoic acid	99.000	J	0	ug/kg
SF-SD-03	110428	-	25-MAR-93	Chrysene	67.000	J	0	ug/kg
SF-SD-03	110428	-	25-MAR-93	bis(2-Ethylhexyl) phthalate	130.000	J	0	ug/kg
SF-SD-03	110428	-	25-MAR-93	Pyrene	71.000	J	0	ug/kg
SF-SD-03	110428	-	25-MAR-93	Fluoranthene	74.000	J	0	ug/kg
PESTICIDES/PCBs								
SF-SD-02	110430	-	25-MAR-93	Aroclor-1254	96.000	-	0	ug/kg

TABLE F-2F

SOUTH FIELD
CONCENTRATIONS OF DETECTED ANALYTES
ABOVE BACKGROUND[a] IN GROUNDWATER - 1000 SERIES
PHASE I FIELD INVESTIGATION
OPERABLE UNIT 2 REMEDIAL INVESTIGATION
FERNALD ENVIRONMENTAL MANAGEMENT PROJECT

SAMPLE LOCATION	SAMPLE ID	SAMPLE INTERVALS	SAMPLE DATE	PARAMETER	FILTER FLAG	RESULTS	VAL QUAL	BACKGROUND	UNITS
METALS									
1046	003089	-	13-APR-88	Manganese	FLTR	.167	-	.165	mg/L
1046	003649	-	23-OCT-88	Selenium	FLTR	.002	J	0	mg/L
1046	003854	-	22-JAN-89	Cadmium	FLTR	.008	-	.007	mg/L
1433	047040	-	16-NOV-92	Calcium	FLTR	129.000	-	125.574	mg/L
1433	047040	-	16-NOV-92	Copper	FLTR	.031	-	.03	mg/L
1433	047040	-	16-NOV-92	Silicon	FLTR	10.500	-	0	mg/L
1433	047044	-	30-NOV-92	Calcium	*U	127.000	-	125.574	mg/L
1433	047044	-	30-NOV-92	Silicon	*U	10.200	-	0	mg/L
RADIONUCLIDES									
1046	003089	-	13-APR-88	TH-228	*U	1.100	J	1.04	pCi/L
1046	003089	-	13-APR-88	U-234	*U	62.500	-	1.9	pCi/L
1046	003089	-	13-APR-88	U-235/236	*U	3.800	-	0	pCi/L
1046	003089	-	13-APR-88	U-238	*U	79.700	-	1.07	pCi/L
1046	003089	-	13-APR-88	U-TOTAL	*U	203.000	-	4	ug/L
1046	003370	-	24-JUL-88	U-234	*U	2.800	J	1.9	pCi/L
1046	003370	-	24-JUL-88	U-238	*U	2.000	J	1.07	pCi/L
1046	003370	-	24-JUL-88	U-TOTAL	*U	6.000	-	4	ug/L
1046	003649	-	23-OCT-88	U-234	*U	2.000	J	1.9	pCi/L
1046	003649	-	23-OCT-88	U-238	*U	2.300	J	1.07	pCi/L
1046	003649	-	23-OCT-88	U-TOTAL	*U	6.000	-	4	ug/L
1046	003854	-	22-JAN-89	U-234	*U	2.400	-	1.9	pCi/L
1046	003854	-	22-JAN-89	U-238	*U	1.900	-	1.07	pCi/L
1046	003854	-	22-JAN-89	U-TOTAL	*U	6.000	-	4	ug/L
1046	066829	-	12-DEC-89	TH-228	UNKN	1.470	J	1.04	pCi/L
1046	066829	-	12-DEC-89	U-234	UNKN	2.960	-	1.9	pCi/L
1046	066829	-	12-DEC-89	U-238	UNKN	1.940	-	1.07	pCi/L
1046	066829	-	12-DEC-89	U-TOTAL	UNKN	8.360	-	4	ug/L
1065	066834	-	13-DEC-89	U-TOTAL	UNKN	5.330	-	4	ug/L
1433	047040	-	16-NOV-92	GROSS ALPHA	UNKN	2619.000	-	0	pCi/L
1433	047040	-	16-NOV-92	GROSS BETA	UNKN	1286.000	-	0	pCi/L
1433	047040	-	16-NOV-92	TH-232	UNKN	.370	J	0	pCi/L
1433	047040	-	16-NOV-92	TH-TOTAL	UNKN	3.400	J	3	ug/L

See footnotes at end of table

TABLE F-2F
(Continued)

SAMPLE LOCATION	SAMPLE ID	SAMPLE INTERVALS	SAMPLE DATE	PARAMETER	FILTER FLAG	RESULTS	VAL QUAL	BACKGROUND	UNITS
RADIONUCLIDES (Continued)									
1433	047040	-	16-NOV-92	U-234	UNKN	1530.000	J	1.9	pCi/L
1433	047040	-	16-NOV-92	U-238	UNKN	1537.000	J	1.07	pCi/L
1433	047040	-	16-NOV-92	U-TOTAL	UNKN	3969.000	-	4	ug/L
1433	047044	-	30-NOV-92	GROSS ALPHA	*U	372.000	J	0	pCi/L
1433	047044	-	30-NOV-92	GROSS BETA	*U	129.000	-	0	pCi/L
1433	047048	-	02-DEC-92	GROSS BETA	UNKN	739.000	-	0	pCi/L
1433	047048	-	02-DEC-92	NP-237	UNKN	.420	N	0	pCi/L
1433	047048	-	02-DEC-92	U-234	UNKN	723.000	J	1.9	pCi/L
1433	047048	-	02-DEC-92	U-235/236	UNKN	31.900	J	0	pCi/L
1433	047048	-	02-DEC-92	U-238	UNKN	731.000	J	1.07	pCi/L
1433	047048	-	02-DEC-92	U-TOTAL	UNKN	3390.000	-	4	ug/L
GENERAL CHEMISTRY									
1046	003649	-	23-OCT-88	Phosphorus	UNFL	.880	-	.223	mg/L
1046	003649	-	23-OCT-88	Total Organic Nitrogen	UNFL	.500	-	0	mg/L
1046	003854	-	22-JAN-89	Phosphorus	UNFL	.400	-	.223	mg/L
1046	003854	-	22-JAN-89	Total Kjeldahl Nitrogen	UNFL	.200	-	0	mg/L
1046	003854	-	22-JAN-89	Total Organic Nitrogen	UNFL	.200	-	0	mg/L
1065	003136	-	14-APR-88	Total Organic Nitrogen	UNFL	.100	-	0	mg/L
1433	047040	-	16-NOV-92	Phosphorus	*U	.340	J	.223	mg/L
1433	047040	-	16-NOV-92	Total Organic Carbon	*U	4.400	-	0	mg/L
1433	047040	-	16-NOV-92	Total Organic Halides	*U	.014	-	0	mg/L
1433	047040	-	16-NOV-92	Total Organic Nitrogen	*U	.288	-	0	mg/L
1433	047044	-	30-NOV-92	Fluoride	*U	1.420	-	1.352	mg/L
1433	047044	-	30-NOV-92	Phosphorus	*U	.360	-	.223	mg/L
1433	047044	-	30-NOV-92	Total Organic Carbon	*U	3.580	-	0	mg/L
1433	047044	-	30-NOV-92	Total Organic Nitrogen	*U	.143	-	0	mg/L

[a]Background concentrations established for metals are filtered while all other background papameters are unfiltered.

FLTR = Filtered sample; filtered status identified on Request for Analysis/Chain of Custody

UNFL = Unfiltered sample; filtered status identified on Request for Analysis/Chain of Custody

UNKN = Unknown; filtered status could not be determined.

*U = Unfiltered sample; filtered status not identified on Request for Analysis/Chain of Custody; determination based upon other field investigation documentation.

TABLE F-2G

SOUTH FIELD
CONCENTRATIONS OF DETECTED ANALYTES
ABOVE BACKGROUND[a] IN GROUNDWATER - 1000 SERIES
PHASE II FIELD INVESTIGATION
OPERABLE UNIT 2 REMEDIAL INVESTIGATION
FERNALD ENVIRONMENTAL MANAGEMENT PROJECT

SAMPLE LOCATION	SAMPLE ID	SAMPLE INTERVALS	SAMPLE DATE	PARAMETER	FILTER FLAG	RESULTS	VAL QUAL	BACKGROUND	UNITS
METALS									
1046	116231	-	11-MAY-93	Aluminum	UNFL	2.410	-	.123	mg/L
1046	116231	-	11-MAY-93	Manganese	UNFL	.169	-	.165	mg/L
1046	116231	-	11-MAY-93	Silicon	UNFL	9.140	-	0	mg/L
1065	112013	-	04-MAY-93	Aluminum	UNFL	.774	-	.123	mg/L
1065	112013	-	04-MAY-93	Cadmium	UNFL	.034	-	.007	mg/L
1065	112013	-	04-MAY-93	Silicon	UNFL	6.610	-	0	mg/L
1065	112013	-	04-MAY-93	Zinc	UNFL	.122	-	.0317	mg/L
1065	112014	-	04-MAY-93	Antimony	FLTR	.014	J	0	mg/L
1065	112014	-	04-MAY-93	Silicon	FLTR	5.670	-	0	mg/L
1065	112014	-	04-MAY-93	Zinc	FLTR	.037	-	.0317	mg/L
11032	113869	-	30-JUN-93	Aluminum	FLTR	.435	-	.123	mg/L
11032	113869	-	30-JUN-93	Aluminum	UNFL	130.000	-	.123	mg/L
11032	113869	-	30-JUN-93	Antimony	FLTR	.006	J	0	mg/L
11032	113869	-	30-JUN-93	Barium	UNFL	1.050	-	.459	mg/L
11032	113869	-	30-JUN-93	Beryllium	UNFL	.006	-	.0018	mg/L
11032	113869	-	30-JUN-93	Calcium	UNFL	1360.000	-	125.574	mg/L
11032	113869	-	30-JUN-93	Chromium	UNFL	.167	J	.0345	mg/L
11032	113869	-	30-JUN-93	Cobalt	UNFL	.069	-	0	mg/L
11032	113869	-	30-JUN-93	Copper	UNFL	.246	-	.03	mg/L
11032	113869	-	30-JUN-93	Iron	UNFL	265.000	-	10.965	mg/L
11032	113869	-	30-JUN-93	Lead	UNFL	.084	-	.05	mg/L
11032	113869	-	30-JUN-93	Magnesium	FLTR	57.400	-	49.627	mg/L
11032	113869	-	30-JUN-93	Magnesium	UNFL	413.000	-	49.627	mg/L
11032	113869	-	30-JUN-93	Manganese	FLTR	.274	-	.165	mg/L
11032	113869	-	30-JUN-93	Manganese	UNFL	4.920	-	.165	mg/L
11032	113869	-	30-JUN-93	Molybdenum	UNFL	.050	-	.028	mg/L
11032	113869	-	30-JUN-93	Nickel	UNFL	.243	-	.026	mg/L
11032	113869	-	30-JUN-93	Silicon	FLTR	8.200	-	0	mg/L
11032	113869	-	30-JUN-93	Silicon	UNFL	83.400	-	0	mg/L
11032	113869	-	30-JUN-93	Silver	UNFL	.061	-	.04	mg/L
11032	113869	-	30-JUN-93	Vanadium	UNFL	.319	J	.0195	mg/L
11032	113869	-	30-JUN-93	Zinc	UNFL	.654	-	.0317	mg/L

See footnotes at end of table

TABLE F-2G
(Continued)

SAMPLE LOCATION	SAMPLE ID	SAMPLE INTERVALS	SAMPLE DATE	PARAMETER	FILTER FLAG	RESULTS	VAL QUAL	BACKGROUND	UNITS
METALS (Continued)									
11085	113792	-	16-JUN-93	Aluminum	UNFL	184.000	-	.123	mg/L
11085	113792	-	16-JUN-93	Antimony	FLTR	.007	-	0	mg/L
11085	113792	-	16-JUN-93	Barium	UNFL	1.140	-	.459	mg/L
11085	113792	-	16-JUN-93	Beryllium	UNFL	.010	-	.0018	mg/L
11085	113792	-	16-JUN-93	Calcium	UNFL	1190.000	-	125.574	mg/L
11085	113792	-	16-JUN-93	Chromium	UNFL	.196	-	.0345	mg/L
11085	113792	-	16-JUN-93	Cobalt	UNFL	.116	-	0	mg/L
11085	113792	-	16-JUN-93	Copper	UNFL	.332	-	.03	mg/L
11085	113792	-	16-JUN-93	Iron	UNFL	370.000	-	10.965	mg/L
11085	113792	-	16-JUN-93	Lead	UNFL	.099	-	.05	mg/L
11085	113792	-	16-JUN-93	Magnesium	UNFL	384.000	-	49.627	mg/L
11085	113792	-	16-JUN-93	Manganese	UNFL	6.490	-	.165	mg/L
11085	113792	-	16-JUN-93	Molybdenum	UNFL	.108	-	.028	mg/L
11085	113792	-	16-JUN-93	Nickel	UNFL	.339	-	.026	mg/L
11085	113792	-	16-JUN-93	Silicon	FLTR	7.450	-	0	mg/L
11085	113792	-	16-JUN-93	Silicon	UNFL	78.600	-	0	mg/L
11085	113792	-	16-JUN-93	Silver	UNFL	.089	-	.04	mg/L
11085	113792	-	16-JUN-93	Vanadium	UNFL	.376	-	.0195	mg/L
11085	113792	-	16-JUN-93	Zinc	UNFL	.940	-	.0317	mg/L
1941	112997	-	30-APR-93	Antimony	UNFL	.013	J	0	mg/L
1941	112997	-	30-APR-93	Cyanide	UNFL	.002	-	0	mg/L
1941	112997	-	30-APR-93	Magnesium	UNFL	60.700	-	49.627	mg/L
1941	112997	-	30-APR-93	Selenium	UNFL	.004	-	0	mg/L
1941	112997	-	30-APR-93	Silicon	UNFL	8.030	-	0	mg/L
1941	113316	-	28-MAY-93	Aluminum	UNFL	86.100	-	.123	mg/L
1941	113316	-	28-MAY-93	Antimony	UNFL	.006	J	0	mg/L
1941	113316	-	28-MAY-93	Barium	UNFL	.565	-	.459	mg/L
1941	113316	-	28-MAY-93	Beryllium	UNFL	.004	-	.0018	mg/L
1941	113316	-	28-MAY-93	Calcium	UNFL	610.000	-	125.574	mg/L
1941	113316	-	28-MAY-93	Chromium	UNFL	.090	J	.0345	mg/L
1941	113316	-	28-MAY-93	Cobalt	UNFL	.033	-	0	mg/L
1941	113316	-	28-MAY-93	Copper	UNFL	.120	-	.03	mg/L
1941	113316	-	28-MAY-93	Iron	UNFL	131.000	-	10.965	mg/L
1941	113316	-	28-MAY-93	Magnesium	UNFL	250.000	-	49.627	mg/L
1941	113316	-	28-MAY-93	Manganese	UNFL	2.240	-	.165	mg/L
1941	113316	-	28-MAY-93	Molybdenum	UNFL	.044	-	.028	mg/L
1941	113316	-	28-MAY-93	Nickel	UNFL	.136	J	.026	mg/L
1941	113316	-	28-MAY-93	Selenium	UNFL	.004	J	0	mg/L
1941	113316	-	28-MAY-93	Silicon	UNFL	102.000	J	0	mg/L

See footnotes at end of table

TABLE F-2G
(Continued)

SAMPLE LOCATION	SAMPLE ID	SAMPLE INTERVALS	SAMPLE DATE	PARAMETER	FILTER FLAG	RESULTS	VAL QUAL	BACKGROUND	UNITS
METALS (Continued)									
1941	113316	-	28-MAY-93	Vanadium	UNFL	.205	-	.0195	mg/L
1941	113316	-	28-MAY-93	Zinc	UNFL	.330	J	.0317	mg/L
1942	113000	-	01-MAY-93	Calcium	UNFL	143.000	-	125.574	mg/L
1942	113000	-	01-MAY-93	Cyanide	UNFL	.002	-	0	mg/L
1942	113000	-	01-MAY-93	Magnesium	UNFL	60.900	-	49.627	mg/L
1942	113000	-	01-MAY-93	Manganese	UNFL	.943	-	.165	mg/L
1942	113000	-	01-MAY-93	Nickel	UNFL	.068	-	.026	mg/L
1942	113000	-	01-MAY-93	Silicon	UNFL	6.580	-	0	mg/L
1942	113319	-	28-MAY-93	Aluminum	UNFL	53.000	-	.123	mg/L
1942	113319	-	28-MAY-93	Calcium	UNFL	390.000	-	125.574	mg/L
1942	113319	-	28-MAY-93	Chromium	UNFL	.056	J	.0345	mg/L
1942	113319	-	28-MAY-93	Cobalt	UNFL	.026	-	0	mg/L
1942	113319	-	28-MAY-93	Copper	UNFL	.076	-	.03	mg/L
1942	113319	-	28-MAY-93	Iron	UNFL	82.400	-	10.965	mg/L
1942	113319	-	28-MAY-93	Magnesium	UNFL	145.000	-	49.627	mg/L
1942	113319	-	28-MAY-93	Manganese	UNFL	2.310	-	.165	mg/L
1942	113319	-	28-MAY-93	Molybdenum	UNFL	.031	-	.028	mg/L
1942	113319	-	28-MAY-93	Nickel	UNFL	.116	J	.026	mg/L
1942	113319	-	28-MAY-93	Silicon	UNFL	74.600	J	0	mg/L
1942	113319	-	28-MAY-93	Vanadium	UNFL	.120	-	.0195	mg/L
1942	113319	-	28-MAY-93	Zinc	UNFL	.221	J	.0317	mg/L
1954	113798	-	22-JUN-93	Aluminum	UNFL	49.000	-	.123	mg/L
1954	113798	-	22-JUN-93	Antimony	FLTR	.012	-	0	mg/L
1954	113798	-	22-JUN-93	Calcium	FLTR	161.000	-	125.574	mg/L
1954	113798	-	22-JUN-93	Calcium	UNFL	381.000	-	125.574	mg/L
1954	113798	-	22-JUN-93	Chromium	UNFL	.047	-	.0345	mg/L
1954	113798	-	22-JUN-93	Cobalt	UNFL	.025	-	0	mg/L
1954	113798	-	22-JUN-93	Copper	UNFL	.062	-	.03	mg/L
1954	113798	-	22-JUN-93	Iron	UNFL	70.300	-	10.965	mg/L
1954	113798	-	22-JUN-93	Magnesium	FLTR	72.700	-	49.627	mg/L
1954	113798	-	22-JUN-93	Magnesium	UNFL	147.000	-	49.627	mg/L
1954	113798	-	22-JUN-93	Manganese	FLTR	1.500	-	.165	mg/L
1954	113798	-	22-JUN-93	Manganese	UNFL	2.370	-	.165	mg/L
1954	113798	-	22-JUN-93	Molybdenum	UNFL	.032	-	.028	mg/L
1954	113798	-	22-JUN-93	Nickel	UNFL	.127	-	.026	mg/L
1954	113798	-	22-JUN-93	Silicon	FLTR	7.890	-	0	mg/L
1954	113798	-	22-JUN-93	Silicon	UNFL	77.200	-	0	mg/L
1954	113798	-	22-JUN-93	Vanadium	UNFL	.103	-	.0195	mg/L
1954	113798	-	22-JUN-93	Zinc	UNFL	.181	-	.0317	mg/L

See footnotes at end of table

0543

5174

TABLE F-2G
(Continued)

SAMPLE LOCATION	SAMPLE ID	SAMPLE INTERVALS	SAMPLE DATE	PARAMETER	FILTER FLAG	RESULTS	VAL QUAL	BACKGROUND	UNITS
RADIONUCLIDES									
1046	116231	-	11-MAY-93	GROSS BETA	UNFL	8.810	J	0	pCi/L
1046	116231	-	11-MAY-93	NP-237	UNFL	.480	N	0	pCi/L
1046	116231	-	11-MAY-93	U-234	UNFL	7.830	-	1.9	pCi/L
1046	116231	-	11-MAY-93	U-235/236	UNFL	.479	J	0	pCi/L
1046	116231	-	11-MAY-93	U-238	UNFL	7.910	-	1.07	pCi/L
1046	116231	-	11-MAY-93	U-TOTAL	UNFL	18.900	-	4	ug/L
1065	112013	-	04-MAY-93	NP-237	UNFL	.220	N	0	pCi/L
1065	112013	-	04-MAY-93	PU-238	UNFL	.090	J	0	pCi/L
1065	112014	-	04-MAY-93	NP-237	UNFL	.300	N	0	pCi/L
1065	112014	-	04-MAY-93	U-234	UNFL	20.300	-	1.9	pCi/L
11032	113869	-	30-JUN-93	GROSS BETA	FLTR	6.640	J	0	pCi/L
11032	113869	-	30-JUN-93	GROSS BETA	UNFL	67.500	J	0	pCi/L
11032	113869	-	30-JUN-93	PU-238	UNFL	.190	J	0	pCi/L
11032	113869	-	30-JUN-93	SR-90	FLTR	1.330	J	0	pCi/L
11032	113869	-	30-JUN-93	U-234	FLTR	2.620	-	1.9	pCi/L
11032	113869	-	30-JUN-93	U-234	UNFL	8.720	-	1.9	pCi/L
11032	113869	-	30-JUN-93	U-235/236	FLTR	.120	-	0	pCi/L
11032	113869	-	30-JUN-93	U-235/236	UNFL	.340	-	0	pCi/L
11032	113869	-	30-JUN-93	U-238	FLTR	2.430	-	1.07	pCi/L
11032	113869	-	30-JUN-93	U-238	UNFL	8.870	-	1.07	pCi/L
11032	113869	-	30-JUN-93	U-TOTAL	FLTR	6.140	J	4	ug/L
11032	113869	-	30-JUN-93	U-TOTAL	UNFL	22.600	J	4	ug/L
11085	113792	-	16-JUN-93	GROSS ALPHA	FLTR	12.100	J	0	pCi/L
11085	113792	-	16-JUN-93	GROSS ALPHA	UNFL	198.000	J	0	pCi/L
11085	113792	-	16-JUN-93	GROSS BETA	UNFL	426.000	J	0	pCi/L
11085	113792	-	16-JUN-93	NP-237	FLTR	.590	N	0	pCi/L
11085	113792	-	16-JUN-93	PU-238	FLTR	.385	J	0	pCi/L
11085	113792	-	16-JUN-93	PU-238	UNFL	.311	J	0	pCi/L
11085	113792	-	16-JUN-93	PU-239/240	FLTR	.204	J	0	pCi/L
11085	113792	-	16-JUN-93	PU-239/240	UNFL	.120	J	0	pCi/L
11085	113792	-	16-JUN-93	RA-226	UNFL	1.360	J	1	pCi/L
11085	113792	-	16-JUN-93	TH-228	UNFL	9.870	-	1.04	pCi/L
11085	113792	-	16-JUN-93	TH-230	FLTR	2.360	J	2	pCi/L
11085	113792	-	16-JUN-93	TH-230	UNFL	11.200	-	2	pCi/L
11085	113792	-	16-JUN-93	TH-232	FLTR	.216	J	0	pCi/L
11085	113792	-	16-JUN-93	TH-232	UNFL	8.560	-	0	pCi/L
11085	113792	-	16-JUN-93	TH-TOTAL	UNFL	78.000	-	3	ug/L
11085	113792	-	16-JUN-93	U-234	UNFL	7.460	-	1.9	pCi/L
11085	113792	-	16-JUN-93	U-235/236	UNFL	.303	J	0	pCi/L

See footnotes at end of table

TABLE F-2G
(Continued)

SAMPLE LOCATION	SAMPLE ID	SAMPLE INTERVALS	SAMPLE DATE	PARAMETER	FILTER FLAG	RESULTS	VAL QUAL	BACKGROUND	UNITS
RADIONUCLIDES (Continued)									
11085	113792	-	16-JUN-93	U-238	FLTR	1.430	-	1.07	pCi/L
11085	113792	-	16-JUN-93	U-238	UNFL	7.090	-	1.07	pCi/L
11085	113792	-	16-JUN-93	U-TOTAL	FLTR	4.330	-	4	ug/L
11085	113792	-	16-JUN-93	U-TOTAL	UNFL	13.700	-	4	ug/L
1941	112997	-	30-APR-93	GROSS ALPHA	UNFL	314.000	J	0	pCi/L
1941	112997	-	30-APR-93	GROSS BETA	UNFL	123.000	J	0	pCi/L
1941	112997	-	30-APR-93	SR-90	UNFL	3.310	J	0	pCi/L
1941	112997	-	30-APR-93	U-234	UNFL	216.000	-	1.9	pCi/L
1941	112997	-	30-APR-93	U-235/236	UNFL	10.700	-	0	pCi/L
1941	112997	-	30-APR-93	U-238	UNFL	220.000	-	1.07	pCi/L
1941	112997	-	30-APR-93	U-TOTAL	UNFL	547.000	-	4	ug/L
1941	113316	-	28-MAY-93	GROSS ALPHA	UNFL	609.000	J	0	pCi/L
1941	113316	-	28-MAY-93	GROSS BETA	UNFL	314.000	-	0	pCi/L
1941	113316	-	28-MAY-93	RA-226	UNFL	1.050	J	1	pCi/L
1941	113316	-	28-MAY-93	TH-228	UNFL	3.870	-	1.04	pCi/L
1941	113316	-	28-MAY-93	TH-230	UNFL	6.800	-	2	pCi/L
1941	113316	-	28-MAY-93	TH-232	UNFL	3.750	-	0	pCi/L
1941	113316	-	28-MAY-93	TH-TOTAL	UNFL	34.200	-	3	ug/L
1941	113316	-	28-MAY-93	U-234	UNFL	166.000	-	1.9	pCi/L
1941	113316	-	28-MAY-93	U-235/236	UNFL	8.480	-	0	pCi/L
1941	113316	-	28-MAY-93	U-238	UNFL	176.000	-	1.07	pCi/L
1941	113316	-	28-MAY-93	U-TOTAL	UNFL	388.000	-	4	ug/L
1942	113000	-	01-MAY-93	GROSS ALPHA	UNFL	220.000	J	0	pCi/L
1942	113000	-	01-MAY-93	GROSS BETA	UNFL	66.900	J	0	pCi/L
1942	113000	-	01-MAY-93	NP-237	UNFL	.395	N	0	pCi/L
1942	113000	-	01-MAY-93	PU-238	UNFL	.560	J	0	pCi/L
1942	113000	-	01-MAY-93	SR-90	UNFL	3.050	J	0	pCi/L
1942	113000	-	01-MAY-93	U-234	UNFL	123.000	-	1.9	pCi/L
1942	113000	-	01-MAY-93	U-235/236	UNFL	6.230	-	0	pCi/L
1942	113000	-	01-MAY-93	U-238	UNFL	125.000	-	1.07	pCi/L
1942	113000	-	01-MAY-93	U-TOTAL	UNFL	340.000	-	4	ug/L
1942	113319	-	28-MAY-93	GROSS ALPHA	UNFL	1080.000	J	0	pCi/L
1942	113319	-	28-MAY-93	GROSS BETA	UNFL	638.000	-	0	pCi/L
1942	113319	-	28-MAY-93	TH-228	UNFL	2.210	-	1.04	pCi/L
1942	113319	-	28-MAY-93	TH-230	UNFL	3.900	-	2	pCi/L
1942	113319	-	28-MAY-93	TH-232	UNFL	1.770	-	0	pCi/L
1942	113319	-	28-MAY-93	TH-TOTAL	UNFL	16.200	J	3	ug/L
1942	113319	-	28-MAY-93	U-234	UNFL	223.000	-	1.9	pCi/L
1942	113319	-	28-MAY-93	U-235/236	UNFL	15.700	-	0	pCi/L

See footnotes at end of table

0545
5174

TABLE F-2G
(Continued)

SAMPLE LOCATION	SAMPLE ID	SAMPLE INTERVALS	SAMPLE DATE	PARAMETER	FILTER FLAG	RESULTS	VAL QUAL	BACKGROUND	UNITS
RADIONUCLIDES (Continued)									
1942	113319	-	28-MAY-93	U-238	UNFL	229.000	-	1.07	pCi/L
1942	113319	-	28-MAY-93	U-TOTAL	UNFL	573.000	-	4	ug/L
1954	113798	-	22-JUN-93	GROSS ALPHA	FLTR	61.000	J	0	pCi/L
1954	113798	-	22-JUN-93	GROSS ALPHA	UNFL	38.000	J	0	pCi/L
1954	113798	-	22-JUN-93	GROSS BETA	FLTR	18.300	J	0	pCi/L
1954	113798	-	22-JUN-93	GROSS BETA	UNFL	41.000	J	0	pCi/L
1954	113798	-	22-JUN-93	PU-239/240	UNFL	.193	J	0	pCi/L
1954	113798	-	22-JUN-93	RA-226	UNFL	1.460	-	1	pCi/L
1954	113798	-	22-JUN-93	TH-228	UNFL	1.100	-	1.04	pCi/L
1954	113798	-	22-JUN-93	TH-232	UNFL	.938	J	0	pCi/L
1954	113798	-	22-JUN-93	TH-TOTAL	UNFL	8.550	-	3	ug/L
1954	113798	-	22-JUN-93	U-234	FLTR	27.900	-	1.9	pCi/L
1954	113798	-	22-JUN-93	U-234	UNFL	18.600	-	1.9	pCi/L
1954	113798	-	22-JUN-93	U-235/236	FLTR	1.720	-	0	pCi/L
1954	113798	-	22-JUN-93	U-235/236	UNFL	.936	J	0	pCi/L
1954	113798	-	22-JUN-93	U-238	FLTR	29.500	-	1.07	pCi/L
1954	113798	-	22-JUN-93	U-238	UNFL	19.100	-	1.07	pCi/L
1954	113798	-	22-JUN-93	U-TOTAL	FLTR	64.500	-	4	ug/L
1954	113798	-	22-JUN-93	U-TOTAL	UNFL	38.900	-	4	ug/L
VOLATILE ORGANICS									
11032	113869	-	30-JUN-93	Acetone	UNFL	6.000	J	0	ug/L
SEMIVOLATILE ORGANICS									
1046	116231	-	11-MAY-93	Di-n-butyl phthalate	UNFL	4.000	J	0	ug/L
11032	113869	-	30-JUN-93	Diethyl phthalate	UNFL	1.000	J	0	ug/L
11032	113869	-	30-JUN-93	Tributyl phosphate	UNFL	1.000	J	0	ug/L
GENERAL CHEMISTRY									
1046	113312	-	28-MAY-93	Total Organic Carbon	UNFL	1.100	-	0	mg/L
1046	113312	-	28-MAY-93	Total Organic Nitrogen	UNFL	.190	-	0	mg/L
1065	112013	-	04-MAY-93	Total Kjeldahl Nitrogen	UNFL	.340	-	0	mg/L
1065	112013	-	04-MAY-93	Total Organic Carbon	UNFL	1.150	-	0	mg/L
1065	112013	-	04-MAY-93	Total Organic Nitrogen	UNFL	.340	-	0	mg/L
11032	113869	-	30-JUN-93	Total Kjeldahl Nitrogen	UNFL	3.320	-	0	mg/L
11032	113869	-	30-JUN-93	Total Organic Carbon	UNFL	1.790	J	0	mg/L
11032	113869	-	30-JUN-93	Total Organic Nitrogen	UNFL	3.060	J	0	mg/L
11085	113792	-	16-JUN-93	Total Kjeldahl Nitrogen	UNFL	4.610	-	0	mg/L
11085	113792	-	16-JUN-93	Total Organic Carbon	UNFL	1.300	-	0	mg/L

See footnotes at end of table

TABLE F-2G
(Continued)

SAMPLE LOCATION	SAMPLE ID	SAMPLE INTERVALS	SAMPLE DATE	PARAMETER	FILTER FLAG	RESULTS	VAL QUAL	BACKGROUND	UNITS
GENERAL CHEMISTRY (Continued)									
11085	113792	-	16-JUN-93	Total Organic Halides	UNFL	.021	-	0	mg/L
11085	113792	-	16-JUN-93	Total Organic Nitrogen	UNFL	4.500	-	0	mg/L
1941	112997	-	30-APR-93	Total Kjeldahl Nitrogen	UNFL	8.430	-	0	mg/L
1941	112997	-	30-APR-93	Total Organic Carbon	UNFL	2.600	-	0	mg/L
1941	112997	-	30-APR-93	Total Organic Nitrogen	UNFL	8.020	-	0	mg/L
1942	113000	-	01-MAY-93	Sulfate	UNFL	162.700	-	141.894	mg/L
1942	113000	-	01-MAY-93	Total Kjeldahl Nitrogen	UNFL	3.240	-	0	mg/L
1942	113000	-	01-MAY-93	Total Organic Carbon	UNFL	3.380	-	0	mg/L
1942	113000	-	01-MAY-93	Total Organic Halides	UNFL	.012	-	0	mg/L
1942	113000	-	01-MAY-93	Total Organic Nitrogen	UNFL	2.680	-	0	mg/L
1954	113798	-	22-JUN-93	Sulfate	UNFL	203.700	-	141.894	mg/L
1954	113798	-	22-JUN-93	Total Kjeldahl Nitrogen	UNFL	1.490	-	0	mg/L
1954	113798	-	22-JUN-93	Total Organic Carbon	UNFL	1.400	-	0	mg/L
1954	113798	-	22-JUN-93	Total Organic Halides	UNFL	.021	J	0	mg/L
1954	113798	-	22-JUN-93	Total Organic Nitrogen	UNFL	1.270	-	0	mg/L

[a]Background concentrations established for metals are filtered while all other background parameters are unfiltered

FLTR = Filtered sample; filtered status identified on Request for Analysis/Chain of Custody

UNFL = Unfiltered sample; filtered status identified on Request for Analysis/Chain of Custody

TABLE F-2H

SOUTH FIELD
CONCENTRATIONS OF DETECTED ANALYTES
ABOVE BACKGROUND[a] IN GROUNDWATER - 2000 SERIES
PHASE I FIELD INVESTIGATION
OPERABLE UNIT 2 REMEDIAL INVESTIGATION
FERNALD ENVIRONMENTAL MANAGEMENT PROJECT

SAMPLE LOCATION	SAMPLE ID	SAMPLE INTERVALS	SAMPLE DATE	PARAMETER	FILTER FLAG	DUPS	RESULTS	VAL QUAL	BACKGROUND	UNITS
METALS										
2014	003064	-	28-MAR-88	Aluminum	FLTR		.755	-	.184	mg/L
2014	004151	-	26-JUL-89	Aluminum	FLTR		.243	-	.184	mg/L
2014	004151	-	26-JUL-89	Nickel	FLTR		.084	-	.026	mg/L
2014	004211	-	01-APR-90	Molybdenum	FLTR		.049	J	.027	mg/L
2046	004097	-	10-MAY-89	Calcium	FLTR		143.000	-	135.163	mg/L
2046	004097	-	10-MAY-89	Magnesium	FLTR		38.700	-	38.07	mg/L
2046	004097	-	10-MAY-89	Potassium	FLTR		3.230	-	3.087	mg/L
2046	004219	-	03-APR-90	Aluminum	FLTR		.185	-	.184	mg/L
2046	004219	-	03-APR-90	Cadmium	FLTR		.007	-	.006	mg/L
2046	004219	-	03-APR-90	Potassium	FLTR		3.510	J	3.087	mg/L
2065	003095	-	19-APR-88	Magnesium	FLTR		42.800	-	38.07	mg/L
2065	003095	-	19-APR-88	Potassium	FLTR		4.070	-	3.087	mg/L
2065	003438	-	04-AUG-88	Calcium	*F		160.000	-	135.163	mg/L
2065	003438	-	04-AUG-88	Magnesium	*F		46.000	-	38.07	mg/L
2065	003538	-	02-FEB-89	Cadmium	FLTR	DUP	.009	-	.006	mg/L
2065	003538	-	02-FEB-89	Calcium	FLTR	DUP	177.000	-	135.163	mg/L
2065	003538	-	02-FEB-89	Magnesium	FLTR	DUP	50.100	-	38.07	mg/L
2065	003538	-	02-FEB-89	Potassium	FLTR	DUP	3.250	-	3.087	mg/L
2065	003693	-	08-NOV-88	Calcium	FLTR		140.000	-	135.163	mg/L
2065	003693	-	08-NOV-88	Magnesium	FLTR		39.400	-	38.07	mg/L
2065	003884	-	02-FEB-89	Cadmium	FLTR		.009	-	.006	mg/L
2065	003884	-	02-FEB-89	Calcium	FLTR		185.000	-	135.163	mg/L
2065	003884	-	02-FEB-89	Magnesium	FLTR		51.300	-	38.07	mg/L
2065	003884	-	02-FEB-89	Nickel	FLTR		.032	-	.026	mg/L
2065	003884	-	02-FEB-89	Potassium	FLTR		3.190	-	3.087	mg/L
2065	003884	-	02-FEB-89	Selenium	FLTR		.006	J	.005	mg/L
2065	004163	-	30-JUL-89	Cadmium	FLTR		.008	-	.006	mg/L
2065	004163	-	30-JUL-89	Calcium	FLTR		184.000	-	135.163	mg/L
2065	004163	-	30-JUL-89	Chromium	FLTR		.050	-	.042	mg/L
2065	004163	-	30-JUL-89	Magnesium	FLTR		54.300	-	38.07	mg/L
2065	004168	-	30-JUL-89	Cadmium	FLTR	DUP	.008	-	.006	mg/L
2065	004168	-	30-JUL-89	Calcium	FLTR	DUP	183.000	-	135.163	mg/L

See footnotes at end of table

TABLE F-2H
(Continued)

SAMPLE LOCATION	SAMPLE ID	SAMPLE INTERVALS	SAMPLE DATE	PARAMETER	FILTER FLAG	DUPS	RESULTS	VAL QUAL	BACKGROUND	UNITS
METALS (Continued)										
2065	004168	-	30-JUL-89	Chromium	FLTR	DUP	.052	-	.042	mg/L
2065	004168	-	30-JUL-89	Magnesium	FLTR	DUP	54.300	-	38.07	mg/L
2065	004225	-	09-APR-90	Cadmium	FLTR		.007	J	.006	mg/L
2065	004225	-	09-APR-90	Calcium	FLTR		170.000	J	135.163	mg/L
2065	004225	-	09-APR-90	Chromium	FLTR		.052	J	.042	mg/L
2065	004225	-	09-APR-90	Magnesium	FLTR		58.200	J	38.07	mg/L
2065	004225	-	09-APR-90	Potassium	FLTR		3.460	J	3.087	mg/L
2065	004225	-	09-APR-90	Vanadium	FLTR		.031	J	.027	mg/L
2385	004192	-	06-MAY-90	Cadmium	FLTR		.008	-	.006	mg/L
2385	004192	-	06-MAY-90	Calcium	FLTR		146.000	-	135.163	mg/L
2385	004192	-	06-MAY-90	Magnesium	FLTR		44.200	-	38.07	mg/L
2385	004192	-	06-MAY-90	Nickel	FLTR		.042	-	.026	mg/L
2385	004192	-	06-MAY-90	Silver	FLTR		.026	-	.023	mg/L
2385	004303	-	10-JUL-90	Calcium	FLTR		136.000	-	135.163	mg/L
2385	004303	-	10-JUL-90	Magnesium	FLTR		40.600	-	38.07	mg/L
RADIONUCLIDES										
1516	046938	-	17-JUL-90	U-TOTAL	*U		293.000	-	2.92	ug/L
1516	046941	-	21-AUG-90	U-TOTAL	FLTR		687.000	-	2.92	ug/L
1517	046944	-	17-JUL-90	U-TOTAL	UNKN	DUP	52.800	-	2.92	ug/L
1517	046945	-	17-JUL-90	TH-TOTAL	UNKN		3.720	J	2	ug/L
1517	046945	-	17-JUL-90	U-TOTAL	UNKN		966.000	-	2.92	ug/L
1517	046946	-	21-AUG-90	U-TOTAL	FLTR		29.900	-	2.92	ug/L
1518	046965	-	21-AUG-90	U-TOTAL	FLTR		64.000	-	2.92	ug/L
2014	003064	-	28-MAR-88	U-234	*U		9.500	J	1.9	pCi/L
2014	003064	-	28-MAR-88	U-235/236	*U		1.600	J	0	pCi/L
2014	003064	-	28-MAR-88	U-238	*U		13.100	J	.9	pCi/L
2014	003384	-	28-JUL-88	U-234	*U		7.700	J	1.9	pCi/L
2014	003384	-	28-JUL-88	U-238	*U		9.900	J	.9	pCi/L
2014	003384	-	28-JUL-88	U-TOTAL	*U		33.000	-	2.92	ug/L
2014	003673	-	06-NOV-88	U-234	*U		9.800	-	1.9	pCi/L
2014	003673	-	06-NOV-88	U-238	*U		13.500	-	.9	pCi/L
2014	003673	-	06-NOV-88	U-TOTAL	*U		35.000	J	2.92	ug/L
2014	003869	-	31-JAN-89	RA-226	*U		1.400	-	1.2	pCi/L
2014	003869	-	31-JAN-89	U-234	*U		4.200	-	1.9	pCi/L
2014	003869	-	31-JAN-89	U-238	*U		5.700	-	.9	pCi/L
2014	003869	-	31-JAN-89	U-TOTAL	*U		17.000	-	2.92	ug/L
2014	004151	-	26-JUL-89	U-234	*U		7.000	-	1.9	pCi/L
2014	004151	-	26-JUL-89	U-238	*U		9.000	-	.9	pCi/L
2014	004151	-	26-JUL-89	U-TOTAL	*U		33.000	-	2.92	ug/L

See footnotes at end of table

TABLE F-2H
(Continued)

SAMPLE LOCATION	SAMPLE ID	SAMPLE INTERVALS	SAMPLE DATE	PARAMETER	FILTER FLAG	DUPS	RESULTS	VAL QUAL	BACKGROUND	UNITS
RADIONUCLIDES (Continued)										
2014	004211	-	01-APR-90	U-234	*U		7.150	J	1.9	pCi/L
2014	004211	-	01-APR-90	U-238	*U		8.950	J	.9	pCi/L
2014	004211	-	01-APR-90	U-TOTAL	*U		36.000	-	2.92	ug/L
2046	003997	-	02-FEB-89	U-234	*U		93.800	-	1.9	pCi/L
2046	003997	-	02-FEB-89	U-235/236	*U		4.300	-	0	pCi/L
2046	003997	-	02-FEB-89	U-238	*U		102.000	-	.9	pCi/L
2046	003997	-	02-FEB-89	U-TOTAL	*U		309.000	-	2.92	ug/L
2046	004097	-	10-MAY-89	U-234	*U		219.000	-	1.9	pCi/L
2046	004097	-	10-MAY-89	U-235/236	*U		9.700	-	0	pCi/L
2046	004097	-	10-MAY-89	U-238	*U		231.000	-	.9	pCi/L
2046	004097	-	10-MAY-89	U-TOTAL	*U		851.000	-	2.92	ug/L
2046	004159	-	28-JUL-89	U-234	*U		86.900	-	1.9	pCi/L
2046	004159	-	28-JUL-89	U-235/236	*U		3.800	-	0	pCi/L
2046	004159	-	28-JUL-89	U-238	*U		87.700	-	.9	pCi/L
2046	004159	-	28-JUL-89	U-TOTAL	*U		232.000	-	2.92	ug/L
2046	004219	-	03-APR-90	U-234	*U		199.000	J	1.9	pCi/L
2046	004219	-	03-APR-90	U-235/236	*U		11.500	J	0	pCi/L
2046	004219	-	03-APR-90	U-238	*U		206.000	J	.9	pCi/L
2046	004219	-	03-APR-90	U-TOTAL	*U		907.000	-	2.92	ug/L
2065	003095	-	19-APR-88	U-234	*U		5.100	-	1.9	pCi/L
2065	003095	-	19-APR-88	U-238	*U		3.300	-	.9	pCi/L
2065	003095	-	19-APR-88	U-TOTAL	*U		3.000	J	2.92	ug/L
2065	003438	-	04-AUG-88	U-234	FLTR		4.800	J	1.9	pCi/L
2065	003438	-	04-AUG-88	U-234	UNFL		4.600	J	1.9	pCi/L
2065	003438	-	04-AUG-88	U-238	FLTR		4.100	J	.9	pCi/L
2065	003438	-	04-AUG-88	U-238	UNFL		4.000	J	.9	pCi/L
2065	003438	-	04-AUG-88	U-TOTAL	FLTR		10.000	-	2.92	ug/L
2065	003438	-	04-AUG-88	U-TOTAL	UNFL		9.000	-	2.92	ug/L
2065	003538	-	02-FEB-89	TH-232	FLTR	DUP	1.400	-	0	pCi/L
2065	003538	-	02-FEB-89	TH-TOTAL	FLTR	DUP	13.000	-	2	ug/L
2065	003538	-	02-FEB-89	U-234	FLTR	DUP	6.000	-	1.9	pCi/L
2065	003538	-	02-FEB-89	U-234	UNFL	DUP	5.300	-	1.9	pCi/L
2065	003538	-	02-FEB-89	U-238	FLTR	DUP	3.700	-	.9	pCi/L
2065	003538	-	02-FEB-89	U-238	UNFL	DUP	3.900	-	.9	pCi/L
2065	003538	-	02-FEB-89	U-TOTAL	FLTR	DUP	13.000	-	2.92	ug/L
2065	003538	-	02-FEB-89	U-TOTAL	UNFL	DUP	9.000	-	2.92	ug/L
2065	003693	-	08-NOV-88	U-234	FLTR		4.700	J	1.9	pCi/L
2065	003693	-	08-NOV-88	U-234	UNFL		2.600	J	1.9	pCi/L
2065	003693	-	08-NOV-88	U-238	FLTR		3.900	J	.9	pCi/L
2065	003693	-	08-NOV-88	U-238	UNFL		2.600	J	.9	pCi/L

See footnotes at end of table

TABLE F-2H
(Continued)

SAMPLE LOCATION	SAMPLE ID	SAMPLE INTERVALS	SAMPLE DATE	PARAMETER	FILTER FLAG	DUPS	RESULTS	VAL QUAL	BACKGROUND	UNITS
RADIONUCLIDES (Continued)										
2065	003693	-	08-NOV-88	U-TOTAL	FLTR		12.000	-	2.92	ug/L
2065	003693	-	08-NOV-88	U-TOTAL	UNFL		7.000	-	2.92	ug/L
2065	003884	-	02-FEB-89	TH-228	FLTR		2.300	J	1.52	pCi/L
2065	003884	-	02-FEB-89	U-234	FLTR		5.000	J	1.9	pCi/L
2065	003884	-	02-FEB-89	U-238	FLTR		3.500	J	.9	pCi/L
2065	004163	-	30-JUL-89	U-234	*U		5.500	-	1.9	pCi/L
2065	004163	-	30-JUL-89	U-238	*U		5.300	-	.9	pCi/L
2065	004163	-	30-JUL-89	U-TOTAL	*U		12.000	-	2.92	ug/L
2065	004168	-	30-JUL-89	U-234	*U	DUP	4.100	-	1.9	pCi/L
2065	004168	-	30-JUL-89	U-238	*U	DUP	4.000	-	.9	pCi/L
2065	004168	-	30-JUL-89	U-TOTAL	*U	DUP	11.000	-	2.92	ug/L
2065	004225	-	09-APR-90	U-234	*U		3.890	-	1.9	pCi/L
2065	004225	-	09-APR-90	U-238	*U		3.780	-	.9	pCi/L
2065	004225	-	09-APR-90	U-TOTAL	*U		11.400	-	2.92	ug/L
2385	004192	-	06-MAY-90	TH-232	*U		1.490	J	0	pCi/L
2385	004192	-	06-MAY-90	TH-TOTAL	*U		13.500	J	2	ug/L
2385	004192	-	06-MAY-90	U-234	*U		51.400	J	1.9	pCi/L
2385	004192	-	06-MAY-90	U-235/236	*U		1.780	J	0	pCi/L
2385	004192	-	06-MAY-90	U-238	*U		51.400	J	.9	pCi/L
2385	004192	-	06-MAY-90	U-TOTAL	*U		204.000	J	2.92	ug/L
2385	004303	-	10-JUL-90	U-234	*U		34.800	J	1.9	pCi/L
2385	004303	-	10-JUL-90	U-235/236	*U		1.810	J	0	pCi/L
2385	004303	-	10-JUL-90	U-238	*U		36.200	J	.9	pCi/L
2385	004303	-	10-JUL-90	U-TOTAL	*U		108.000	J	2.92	ug/L
VOLATILE ORGANICS										
1517	046945	-	17-JUL-90	1,1,1-Trichloroethane	UNFL		5.000	-	0	ug/L
1517	046945	-	17-JUL-90	1,1-Dichloroethane	UNFL		9.000	-	0	ug/L
1517	046945	-	17-JUL-90	1,2-Dichloroethene	UNFL		5.000	-	0	ug/L
1517	046945	-	17-JUL-90	Acetone	UNFL		5.000	J	0	ug/L
1517	046945	-	17-JUL-90	Trichloroethene	UNFL		7.000	-	0	ug/L
2014	003064	-	28-MAR-88	Acetone	UNFL		2.000	J	0	ug/L
SEMIVOLATILE ORGANICS										
2014	003064	-	28-MAR-88	bis(2-Ethylhexyl) phthalate	UNFL		2.000	J	0	ug/L
2065	003095	-	19-APR-88	Diethyl phthalate	UNFL		20.000	-	0	ug/L
GENERAL CHEMISTRY										
2014	003673	-	06-NOV-88	Total Kjeldahl Nitrogen	UNFL		1.070	J	0	mg/L
2014	003673	-	06-NOV-88	Total Organic Halides	UNFL		1.700	-	.021	mg/L

See footnotes at end of table

0551

5174

TABLE F-2H
(Continued)

SAMPLE LOCATION	SAMPLE ID	SAMPLE INTERVALS	SAMPLE DATE	PARAMETER	FILTER FLAG	DUPS	RESULTS	VAL QUAL	BACKGROUND	UNITS
GENERAL CHEMISTRY (Continued)										
2014	003673	-	06-NOV-88	Total Organic Nitrogen	UNFL		1.070	J	.652	mg/L
2014	003869	-	31-JAN-89	Total Kjeldahl Nitrogen	UNFL		.762	-	0	mg/L
2014	004151	-	26-JUL-89	Total Organic Halides	UNFL		.060	J	.021	mg/L
2014	004211	-	01-APR-90	Total Organic Carbon	UNFL		4.070	J	3.764	mg/L
2046	003997	-	02-FEB-89	Total Kjeldahl Nitrogen	UNFL		.275	J	0	mg/L
2046	004097	-	10-MAY-89	Phosphorus	UNFL		.801	-	.693	mg/L
2046	004097	-	10-MAY-89	Total Kjeldahl Nitrogen	UNFL		.377	-	0	mg/L
2046	004159	-	28-JUL-89	Total Kjeldahl Nitrogen	UNFL		.516	-	0	mg/L
2048	003994	-	09-FEB-89	Phosphorus	UNFL		.960	J	.693	mg/L
2048	003994	-	09-FEB-89	Total Kjeldahl Nitrogen	UNFL		.441	J	0	mg/L
2048	004100	-	02-MAY-89	Phosphorus	UNFL		1.291	-	.693	mg/L
2048	004100	-	02-MAY-89	Total Kjeldahl Nitrogen	UNFL		.725	-	0	mg/L
2048	004100	-	02-MAY-89	Total Organic Nitrogen	UNFL		.725	-	.652	mg/L
2065	003538	-	02-FEB-89	Total Kjeldahl Nitrogen	UNFL	DUP	1.790	J	0	mg/L
2065	003538	-	02-FEB-89	Total Organic Nitrogen	UNFL	DUP	1.790	-	.652	mg/L
2065	003884	-	02-FEB-89	Total Kjeldahl Nitrogen	UNFL		.100	J	0	mg/L
2065	004163	-	30-JUL-89	Total Kjeldahl Nitrogen	UNFL		.409	-	0	mg/L
2065	004168	-	30-JUL-89	Total Kjeldahl Nitrogen	UNFL	DUP	.452	-	0	mg/L
2385	004192	-	06-MAY-90	Total Organic Carbon	UNFL		62.000	-	3.764	mg/L
2401	038375	-	03-JUN-92	Total Organic Carbon	UNFL		22.000	-	3.764	mg/L

[a]Background concentrations established for metals are filtered while all other background parameters are unfiltered

FLTR = Filtered sample; filtered status identified on Request for Analysis/Chain of Custody

UNFL = Unfiltered sample; filtered status identified on Request for Analysis/Chain of Custody

UNKN = Unknown; filtered status could not be determined.

DUP = Duplicate Sample

*F = Filtered sample; filtered status not identified on Request for Analysis/Chain of Custody; determination based upon other field investigation documentation.

*U = Unfiltered sample; filtered status not identified on Request for Analysis/Chain of Custody; determination based upon other field investigation documentation.

N/A = Not applicable

TABLE F-2I

SOUTH FIELD
CONCENTRATIONS OF DETECTED ANALYTES
ABOVE BACKGROUND[a] IN GROUNDWATER - 2000 SERIES
PHASE II FIELD INVESTIGATION
OPERABLE UNIT 2 REMEDIAL INVESTIGATION
FERNALD ENVIRONMENTAL MANAGEMENT PROJECT

SAMPLE LOCATION	SAMPLE ID	SAMPLE INTERVALS	SAMPLE DATE	PARAMETER	FILTER FLAG	DUPS	RESULTS	VAL QUAL	BACKGROUND	UNITS
METALS										
2014	111992	-	30-APR-93	Aluminum	UNFL		.696	-	.184	mg/L
2046	116233	-	11-MAY-93	Potassium	UNFL		4.400	-	3.087	mg/L
2065	112008	-	03-MAY-93	Calcium	UNFL		155.000	-	135.163	mg/L
2065	112008	-	03-MAY-93	Magnesium	UNFL		49.300	-	38.07	mg/L
2065	112008	-	03-MAY-93	Potassium	UNFL		3.090	-	3.087	mg/L
2065	113291	-	03-MAY-93	Calcium	FLTR		158.000	-	135.163	mg/L
2065	113291	-	03-MAY-93	Magnesium	FLTR		50.800	-	38.07	mg/L
2065	113291	-	03-MAY-93	Potassium	FLTR		3.200	-	3.087	mg/L
2385	111998	-	28-APR-93	Magnesium	FLTR		40.300	-	38.07	mg/L
2401	116229	-	11-MAY-93	Aluminum	UNFL		.234	-	.184	mg/L
2943	113314	-	27-MAY-93	Aluminum	UNFL	DUP	.906	J	.184	mg/L
2944	113866	-	30-JUN-93	Aluminum	UNFL		5.110	-	.184	mg/L
2944	113866	-	30-JUN-93	Calcium	UNFL		198.000	-	135.163	mg/L
2944	113866	-	30-JUN-93	Iron	UNFL		15.100	-	4	mg/L
2944	113866	-	30-JUN-93	Magnesium	UNFL		60.200	-	38.07	mg/L
2944	113866	-	30-JUN-93	Potassium	UNFL		3.180	-	3.087	mg/L
2944	113866	-	30-JUN-93	Silicon	UNFL		12.800	-	10.491	mg/L
2945	112994	-	28-APR-93	Calcium	UNFL		166.000	-	135.163	mg/L
2945	113313	-	26-MAY-93	Aluminum	UNFL		.834	-	.184	mg/L
2945	113313	-	26-MAY-93	Calcium	UNFL		169.000	-	135.163	mg/L
2945	113313	-	26-MAY-93	Potassium	UNFL		3.160	-	3.087	mg/L
2954	113795	-	21-JUN-93	Calcium	FLTR		147.000	-	135.163	mg/L
2954	113795	-	21-JUN-93	Calcium	UNFL		146.000	-	135.163	mg/L
2954	113795	-	21-JUN-93	Potassium	FLTR		4.110	-	3.087	mg/L
2954	113795	-	21-JUN-93	Potassium	UNFL		3.970	-	3.087	mg/L
RADIONUCLIDES										
2014	111992	-	30-APR-93	GROSS BETA	UNFL		7.030	J	0	pCi/L
2014	111992	-	30-APR-93	NP-237	UNFL		.480	N	0	pCi/L
2014	111992	-	30-APR-93	U-234	UNFL		3.490	-	1.9	pCi/L
2014	111992	-	30-APR-93	U-235/236	UNFL		.220	J	0	pCi/L
2014	111992	-	30-APR-93	U-238	UNFL		3.290	-	.9	pCi/L
2014	111992	-	30-APR-93	U-TOTAL	UNFL		9.050	-	2.92	ug/L

See footnotes at end of table

0553
5174

TABLE F-2I
(Continued)

SAMPLE LOCATION	SAMPLE ID	SAMPLE INTERVALS	SAMPLE DATE	PARAMETER	FILTER FLAG	DUPS	RESULTS	VAL QUAL	BACKGROUND	UNITS
RADIONUCLIDES (Continued)										
2046	116233	-	11-MAY-93	GROSS ALPHA	UNFL		319.000	J	0	pCi/L
2046	116233	-	11-MAY-93	GROSS BETA	UNFL		96.600	J	0	pCi/L
2046	116233	-	11-MAY-93	NP-237	UNFL		.710	N	0	pCi/L
2046	116233	-	11-MAY-93	PU-238	UNFL		.152	J	0	pCi/L
2046	116233	-	11-MAY-93	U-234	UNFL		160.000	-	1.9	pCi/L
2046	116233	-	11-MAY-93	U-235/236	UNFL		8.720	-	0	pCi/L
2046	116233	-	11-MAY-93	U-238	UNFL		172.000	-	.9	pCi/L
2046	116233	-	11-MAY-93	U-TOTAL	UNFL		423.000	-	2.92	ug/L
2065	112008	-	03-MAY-93	GROSS BETA	UNFL		6.920	J	0	pCi/L
2065	112008	-	03-MAY-93	U-234	UNFL		4.810	-	1.9	pCi/L
2065	112008	-	03-MAY-93	U-235/236	UNFL		.311	J	0	pCi/L
2065	112008	-	03-MAY-93	U-238	UNFL		3.640	-	.9	pCi/L
2065	112008	-	03-MAY-93	U-TOTAL	UNFL		9.940	-	2.92	ug/L
2065	113291	-	03-MAY-93	GROSS BETA	FLTR		6.620	J	0	pCi/L
2065	113291	-	03-MAY-93	U-234	FLTR		5.430	-	1.9	pCi/L
2065	113291	-	03-MAY-93	U-238	FLTR		3.390	-	.9	pCi/L
2065	113291	-	03-MAY-93	U-TOTAL	FLTR		9.960	-	2.92	ug/L
2385	111998	-	28-APR-93	GROSS ALPHA	UNFL		49.700	J	0	pCi/L
2385	111998	-	28-APR-93	GROSS BETA	UNFL		25.500	J	0	pCi/L
2385	111998	-	28-APR-93	PU-238	UNFL		.637	J	0	pCi/L
2385	111998	-	28-APR-93	U-234	UNFL		33.700	-	1.9	pCi/L
2385	111998	-	28-APR-93	U-235/236	UNFL		1.690	-	0	pCi/L
2385	111998	-	28-APR-93	U-238	UNFL		37.100	-	.9	pCi/L
2385	111998	-	28-APR-93	U-TOTAL	UNFL		98.700	-	2.92	ug/L
2401	116229	-	11-MAY-93	NP-237	UNFL		.841	N	0	pCi/L
2401	116229	-	11-MAY-93	PU-238	UNFL		.256	J	0	pCi/L
2401	116229	-	11-MAY-93	U-238	UNFL		1.440	J	.9	pCi/L
2401	116229	-	11-MAY-93	U-TOTAL	UNFL		5.130	-	2.92	ug/L
2943	113003	-	05-MAY-93	NP-237	UNFL		.150	N	0	pCi/L
2943	113003	-	05-MAY-93	TH-230	UNFL		2.060	-	1.79	pCi/L
2943	113003	-	05-MAY-93	U-235/236	UNFL		.710	J	0	pCi/L
2943	113003	-	05-MAY-93	U-238	UNFL		1.310	-	.9	pCi/L
2943	113003	-	05-MAY-93	U-TOTAL	UNFL		2.930	-	2.92	ug/L
2943	113314	-	27-MAY-93	PU-238	UNFL		.075	J	0	pCi/L
2943	113314	-	27-MAY-93	U-235/236	UNFL		.757	J	0	pCi/L
2943	113314	-	27-MAY-93	U-238	UNFL		1.100	-	.9	pCi/L
2943	113314	-	27-MAY-93	U-TOTAL	UNFL		3.000	-	2.92	ug/L
2943	113315	-	27-MAY-93	GROSS BETA	UNFL	DUP	8.370	-	0	pCi/L
2943	113315	-	27-MAY-93	PU-238	UNFL	DUP	.065	J	0	pCi/L
2943	113315	-	27-MAY-93	U-238	UNFL	DUP	1.250	-	.9	pCi/L

See footnotes at end of table

TABLE F-2I
(Continued)

SAMPLE LOCATION	SAMPLE ID	SAMPLE INTERVALS	SAMPLE DATE	PARAMETER	FILTER FLAG	DUPS	RESULTS	VAL QUAL	BACKGROUND	UNITS
RADIONUCLIDES (Continued)										
2943	113315	-	27-MAY-93	U-TOTAL	UNFL	DUP	3.200	-	2.92	ug/L
2944	113866	-	30-JUN-93	GROSS BETA	FLTR		12.700	J	0	pCi/L
2945	112994	-	28-APR-93	GROSS ALPHA	UNFL		1410.000	J	0	pCi/L
2945	112994	-	28-APR-93	GROSS BETA	UNFL		520.000	J	0	pCi/L
2945	112994	-	28-APR-93	NP-237	UNFL		.796	J	0	pCi/L
2945	112994	-	28-APR-93	TH-232	UNFL		.044	J	0	pCi/L
2945	112994	-	28-APR-93	U-234	UNFL		662.000	-	1.9	pCi/L
2945	112994	-	28-APR-93	U-235/236	UNFL		31.700	-	0	pCi/L
2945	112994	-	28-APR-93	U-238	UNFL		707.000	-	.9	pCi/L
2945	112994	-	28-APR-93	U-TOTAL	UNFL		2070.000	-	2.92	ug/L
2945	113313	-	26-MAY-93	GROSS ALPHA	UNFL		1120.000	J	0	pCi/L
2945	113313	-	26-MAY-93	GROSS BETA	UNFL		411.000	-	0	pCi/L
2945	113313	-	26-MAY-93	NP-237	UNFL		.962	J	0	pCi/L
2945	113313	-	26-MAY-93	U-TOTAL	UNFL		1820.000	-	2.92	ug/L
2954	113795	-	21-JUN-93	GROSS ALPHA	FLTR		553.000	J	0	pCi/L
2954	113795	-	21-JUN-93	GROSS ALPHA	UNFL		781.000	J	0	pCi/L
2954	113795	-	21-JUN-93	GROSS BETA	FLTR		150.000	J	0	pCi/L
2954	113795	-	21-JUN-93	GROSS BETA	UNFL		158.000	J	0	pCi/L
2954	113795	-	21-JUN-93	NP-237	FLTR		.698	N	0	pCi/L
2954	113795	-	21-JUN-93	SR-90	FLTR		1.170	J	0	pCi/L
2954	113795	-	21-JUN-93	U-234	FLTR		357.500	-	1.9	pCi/L
2954	113795	-	21-JUN-93	U-234	UNFL		372.000	-	1.9	pCi/L
2954	113795	-	21-JUN-93	U-235/236	FLTR		15.700	-	0	pCi/L
2954	113795	-	21-JUN-93	U-235/236	UNFL		15.600	-	0	pCi/L
2954	113795	-	21-JUN-93	U-238	FLTR		381.000	-	.9	pCi/L
2954	113795	-	21-JUN-93	U-238	UNFL		384.000	-	.9	pCi/L
2954	113795	-	21-JUN-93	U-TOTAL	FLTR		1129.000	-	2.92	ug/L
2954	113795	-	21-JUN-93	U-TOTAL	UNFL		1167.000	-	2.92	ug/L
VOLATILE ORGANICS										
2065	112008	-	03-MAY-93	Acetone	UNFL		10.000	-	0	ug/L
2945	112994	-	28-APR-93	1,1,1-Trichloroethane	UNFL		1.000	J	0	ug/L
2945	112994	-	28-APR-93	Acetone	UNFL		3.000	J	0	ug/L
SEMIVOLATILE ORGANICS										
2046	116233	-	11-MAY-93	Di-n-butyl phthalate	UNFL		4.000	J	0	ug/L
2046	116233	-	11-MAY-93	bis(2-Ethylhexyl) phthalate	UNFL		3.000	J	0	ug/L
2401	116229	-	11-MAY-93	Di-n-butyl phthalate	UNFL		5.000	J	0	ug/L
2401	116229	-	11-MAY-93	bis(2-Ethylhexyl) phthalate	UNFL		2.000	J	0	ug/L
2945	112994	-	28-APR-93	Butyl benzyl phthalate	UNFL		1.000	J	0	ug/L

See footnotes at end of table

TABLE F-2I
(Continued)

SAMPLE LOCATION	SAMPLE ID	SAMPLE INTERVALS	SAMPLE DATE	PARAMETER	FILTER FLAG	DUPS	RESULTS	VAL QUAL	BACKGROUND	UNITS
SEMIVOLATILE ORGANICS (Continued)										
2954	113795	-	21-JUN-93	Butyl benzyl phthalate	UNFL		2.000	J	0	ug/L
2954	113795	-	21-JUN-93	bis(2-Ethylhexyl) phthalate	UNFL		6.000	J	0	ug/L
GENERAL CHEMISTRY										
2014	111992	-	30-APR-93	Total Kjeldahl Nitrogen	UNFL		.220	-	0	mg/L
2046	116233	-	11-MAY-93	Total Kjeldahl Nitrogen	UNFL		.110	-	0	mg/L
2385	111998	-	28-APR-93	Total Kjeldahl Nitrogen	UNFL		.190	-	0	mg/L
2401	116229	-	11-MAY-93	Total Kjeldahl Nitrogen	UNFL		.160	-	0	mg/L
2943	113003	-	05-MAY-93	Total Kjeldahl Nitrogen	UNFL		.100	-	0	mg/L
2944	113866	-	30-JUN-93	Total Kjeldahl Nitrogen	UNFL		.240	-	0	mg/L
2945	112994	-	28-APR-93	Total Kjeldahl Nitrogen	UNFL		.320	-	0	mg/L
2954	113795	-	21-JUN-93	Total Kjeldahl Nitrogen	UNFL		.110	-	0	mg/L

[a]Background concentrations established for metals are filtered while all other background parameters are unfiltered.

FLTR = Filtered sample; filtered status identified on Request for Analysis/Chain of Custody

UNFL = Unfiltered sample; filtered status identified on Request for Analysis/Chain of Custody

DUP = Duplicate Sample

TABLE F-2J

SOUTH FIELD
CONCENTRATIONS OF DETECTED ANALYTES
ABOVE BACKGROUND[a] IN GROUNDWATER - 3000 AND 4000 SERIES
PHASE I FIELD INVESTIGATION
OPERABLE UNIT 2 REMEDIAL INVESTIGATION
FERNALD ENVIRONMENTAL MANAGEMENT PROJECT

SAMPLE LOCATION	SAMPLE ID	SAMPLE INTERVALS	SAMPLE DATE	PARAMETER	FILTER FLAG	RESULTS	VAL QUAL	BACKGROUND	UNITS
METALS									
3046	004207	-	15-JUN-90	Nickel	FLTR	.030	-	.026	mg/L
3385	004309	-	24-JUL-90	Nickel	*F	.029	-	.026	mg/L
4014	003871	-	31-JAN-89	Mercury	FLTR	.006	-	.001	mg/L
4014	004089	-	01-MAY-89	Mercury	FLTR	.003	-	.001	mg/L
4016	003996	-	20-JAN-89	Manganese	FLTR	1.020	-	.8	mg/L
RADIONUCLIDES									
3014	003084	-	08-APR-88	TH-228	*U	2.500	J	1.52	pCi/L
3014	003084	-	08-APR-88	TH-232	*U	1.100	J	0	pCi/L
3014	003084	-	08-APR-88	U-234	*U	6.700	J	1.9	pCi/L
3014	003084	-	08-APR-88	U-238	*U	8.500	J	.9	pCi/L
3014	003084	-	08-APR-88	U-TOTAL	*U	23.000	J	2.92	ug/L
3014	003385	-	28-JUL-88	TH-TOTAL	*U	7.000	J	2	ug/L
3014	003385	-	28-JUL-88	U-234	*U	7.300	J	1.9	pCi/L
3014	003385	-	28-JUL-88	U-238	*U	10.000	J	.9	pCi/L
3014	003385	-	28-JUL-88	U-TOTAL	*U	29.000	-	2.92	ug/L
3014	003672	-	06-NOV-88	U-234	*U	7.100	-	1.9	pCi/L
3014	003672	-	06-NOV-88	U-238	*U	8.700	-	.9	pCi/L
3014	003672	-	06-NOV-88	U-TOTAL	*U	28.000	J	2.92	ug/L
3014	003870	-	31-JAN-89	U-234	*U	6.900	-	1.9	pCi/L
3014	003870	-	31-JAN-89	U-238	*U	8.900	-	.9	pCi/L
3014	003870	-	31-JAN-89	U-TOTAL	*U	30.000	-	2.92	ug/L
3014	004239	-	01-APR-90	U-234	*U	17.100	J	1.9	pCi/L
3014	004239	-	01-APR-90	U-235/236	*U	1.470	J	0	pCi/L
3014	004239	-	01-APR-90	U-238	*U	16.400	J	.9	pCi/L
3014	004239	-	01-APR-90	U-TOTAL	*U	35.300	-	2.92	ug/L
3045	004198	-	23-MAY-90	U-TOTAL	*U	6.020	-	2.92	ug/L
3046	004207	-	15-JUN-90	RA-226	*U	2.400	-	1.2	pCi/L
3046	004332	-	24-AUG-90	TH-228	*U	1.590	-	1.52	pCi/L
3046	004332	-	24-AUG-90	U-TOTAL	*U	3.030	-	2.92	ug/L
3385	004309	-	24-JUL-90	TH-230	*U	2.210	J	1.79	pCi/L

See footnotes at end of table

5174

TABLE F-2J
(Continued)

SAMPLE LOCATION	SAMPLE ID	SAMPLE INTERVALS	SAMPLE DATE	PARAMETER	FILTER FLAG	RESULTS	VAL QUAL	BACKGROUND	UNITS
RADIONUCLIDES (Continued)									
3385	004309	-	24-JUL-90	TH-232	*U	1.040	J	0	pCi/L
3385	004309	-	24-JUL-90	TH-TOTAL	*U	9.380	J	2	ug/L
3385	004363	-	10-JAN-91	U-TOTAL	*U	2.940	-	2.92	ug/L
GENERAL CHEMISTRY									
3014	003672	-	06-NOV-88	Total Kjeldahl Nitrogen	UNFL	.290	J	0	mg/L
3014	003672	-	06-NOV-88	Total Organic Halides	UNFL	1.100	-	.021	mg/L
3014	003870	-	31-JAN-89	Total Kjeldahl Nitrogen	UNFL	.286	-	0	mg/L
3014	003870	-	31-JAN-89	Total Organic Halides	N/A	1.310	-	.021	mg/L
3014	004239	-	01-APR-90	Total Organic Carbon	UNFL	4.450	J	3.764	mg/L
3065	003995	-	25-JAN-89	Total Kjeldahl Nitrogen	UNFL	.100	-	0	mg/L
3065	004098	-	31-MAY-89	Total Kjeldahl Nitrogen	UNFL	.112	-	0	mg/L
3385	004363	-	10-JAN-91	Total Organic Halides	UNFL	.164	-	.021	mg/L
4014	003871	-	31-JAN-89	Total Kjeldahl Nitrogen	UNFL	.192	-	0	mg/L

[a]Background concentrations established for metals are filtered while all other background parameters are unfiltered.

FLTR = Filtered sample; filtered status identified on Request for Analysis/Chain of Custody

UNFL = Unfiltered sample; filtered status identified on Request for Analysis/Chain of Custody

*F = Filtered sample; filtered status not identified on Request for Analysis/Chain of Custody; determination based upon other field investigation documentation.

*U = Unfiltered sample; filtered status not identified on Request for Analysis/Chain of Custody; determination based upon other field investigation documentation.

N/A = Not Applicable

TABLE F-3A

SOUTH FIELD
RI/FS SURFACE SOIL RESULTS
OPERABLE UNIT 2 REMEDIAL INVESTIGATION
FERNALD ENVIRONMENTAL MANAGEMENT PROJECT

PHASE I - RADIOLOGICAL PARAMETERS

BORING NUMBER	ZONE 3		
SAMPLE NUMBER	005001		
	0 - 2		
SAMPLING DATE	08/28/87		
RADIOLOGICAL PARAMETERS	RESULTS	UNITS	VQ
CS-137	0.300	pci/g	R
NP-237	0.600	pci/g	R
PU-238	0.600	pci/g	R
PU-239/240	0.600	pci/g	R
RA-226	1.200	pci/g	R
RA-228	1.000	pci/g	R
RU-106	1.400	pci/g	R
SR-90	0.500	pci/g	R
TC-99	1.000	pci/g	R
TH-228	0.900	pci/g	R
TH-230	1.500	pci/g	R
TH-232	1.700	pci/g	R
U-234	2.600	pci/g	R
U-235/236	0.600	pci/g	R
U-238	2.700	pci/g	R

0559

TABLE F-3A
(Continued)

PHASE II - RADIOLOGICAL PARAMETERS

BORING NUMBER	1964			1965			1966		
SAMPLE NUMBER	110331			110351			110355		
	0 - 0.5			0 - 0.5			0 - 0.5		
SAMPLING DATE	03/22/93			03/22/93			03/22/93		
RADIOLOGICAL PARAMETERS	RESULTS	UNITS	VQ	RESULTS	UNITS	VQ	RESULTS	UNITS	VQ
CS-137	0.692	pci/g	-	0.836	pci/g	-	0.736	pci/g	-
GROSS ALPHA	25.200	pci/g	-	62.000	pci/g	-	79.500	pci/g	-
GROSS BETA	39.000	pci/g	-	56.600	pci/g	-	53.700	pci/g	-
NP-237	0.180	pci/g	N	0.483	pci/g	N	0.214	pci/g	N
PU-238	0.091	pci/g	J	0.019	pci/g	J	0.116	pci/g	J
PU-239/240	0.043	pci/g	J	0.024	pci/g	J	0.076	pci/g	J
RA-226	1.220	pci/g	J	1.800	pci/g	-	1.740	pci/g	-
RA-228	1.070	pci/g	-	1.210	pci/g	-	3.880	pci/g	-
RU-106	0.622	pci/g	UJ	0.777	pci/g	UJ	0.978	pci/g	UJ
SR-90	0.355	pci/g	N	0.534	pci/g	-	0.393	pci/g	UJ
TC-99	0.342	pci/g	UJ	0.333	pci/g	UJ	0.392	pci/g	UJ
TH-228	0.911	pci/g	-	0.770	pci/g	-	4.410	pci/g	-
TH-230	1.350	pci/g	-	0.117	pci/g	-	12.100	pci/g	-
TH-232	0.849	pci/g	-	0.825	pci/g	-	3.990	pci/g	-
TH-TOTAL	7.810	ug/g	-	7.590	ug/g	-	36.700	ug/g	-
U-234	3.430	pci/g	-	16.300	pci/g	-	10.000	pci/g	-
U-235/236	0.157	pci/g	J	0.887	pci/g	-	0.515	pci/g	-
U-238	3.470	pci/g	-	16.600	pci/g	-	11.300	pci/g	-
U-TOTAL	10.500	mg/kg	-	49.000	mg/kg	-	38.100	mg/kg	-

0560

TABLE F-3A
(Continued)

PHASE II - RADIOLOGICAL PARAMETERS

BORING NUMBER	1967			1968			1969		
SAMPLE NUMBER	110358			110392			110338		
	0 - 0.5			0 - 0.5			0 - 0.5		
SAMPLING DATE	03/22/93			03/22/93			03/22/93		
RADIOLOGICAL PARAMETERS	RESULTS	UNITS	VQ	RESULTS	UNITS	VQ	RESULTS	UNITS	VQ
CS-137	0.390	pci/g	-	0.465	pci/g	-	0.254	pci/g	-
GROSS ALPHA	20.800	pci/g	-	33.500	pci/g	-	19.000	pci/g	-
GROSS BETA	37.700	pci/g	-	48.800	pci/g	-	35.000	pci/g	-
NP-237	0.074	pci/g	U	0.185	pci/g	N	0.136	pci/g	N
PU-238	0.128	pci/g	J	0.072	pci/g	J	0.044	pci/g	J
PU-239/240	0.032	pci/g	UJ	0.061	pci/g	J	0.019	pci/g	J
RA-226	0.950	pci/g	J	1.140	pci/g	J	1.170	pci/g	J
RA-228	1.050	pci/g	-	1.020	pci/g	-	1.070	pci/g	-
RU-106	0.820	pci/g	UJ	0.864	pci/g	UJ	0.068	pci/g	UJ
SR-90	0.360	pci/g	UJ	0.428	pci/g	UJ	0.491	pci/g	UJ
TC-99	0.310	pci/g	UJ	0.345	pci/g	UJ	0.330	pci/g	UJ
TH-228	0.912	pci/g	R	0.867	pci/g	-	0.658	pci/g	-
TH-230	1.500	pci/g	R	1.980	pci/g	-	1.070	pci/g	-
TH-232	0.908	pci/g	R	1.070	pci/g	-	0.728	pci/g	-
TH-TOTAL	8.350	pci/g	R	9.840	ug/g	-	6.700	ug/g	-
U-234	4.460	pci/g	-	9.710	pci/g	-	3.580	pci/g	-
U-235/236	0.198	pci/g	J	0.303	pci/g	J	0.197	pci/g	J
U-238	4.410	pci/g	-	9.840	pci/g	-	3.790	pci/g	-
U-TOTAL	12.500	mg/kg	-	31.200	mg/kg	-	16.700	mg/kg	-

0561

5174

TABLE F-3A
(Continued)

PHASE II - RADIOLOGICAL PARAMETERS

BORING NUMBER	1970			1971			1972		
SAMPLE NUMBER	110372			110324			110378		
	0 - 0.5			0 - 0.5			0 - 0.5		
SAMPLING DATE	03/22/92			03/22/93			03/19/93		
RADIOLOGICAL PARAMETERS	RESULTS	UNITS	VQ	RESULTS	UNITS	VQ	RESULTS	UNITS	VQ
CS-137	0.691	pci/g	-	0.109	pci/g	UJ	0.473	pci/g	-
GROSS ALPHA	31.400	pci/g	-	18.700	pci/g	-	234.000	pci/g	J
GROSS BETA	41.300	pci/g	-	34.700	pci/g	-	94.700	pci/g	J
NP-237	NA			0.010	pci/g	R	NA		
PU-238	NA			0.042	pci/g	UJ	0.341	pci/g	J
PU-239/240	NA			0.021	pci/g	J	0.042	pci/g	J
RA-226	1.140	pci/g	J	0.874	pci/g	J	21.600	pci/g	-
RA-228	1.050	pci/g	-	0.986	pci/g	-	1.170	pci/g	-
RU-106	0.773	pci/g	UJ	0.840	pci/g	UJ	0.124	pci/g	UJ
SR-90	0.420	pci/g	UJ	0.553	pci/g	UJ	0.387	pci/g	UJ
TC-99	0.368	pci/g	UJ	0.335	pci/g	UJ	0.377	pci/g	UJ
TH-228	1.030	pci/g	-	0.684	pci/g	-	1.250	pci/g	R
TH-230	2.210	pci/g	-	0.158	pci/g	-	21.100	pci/g	R
TH-232	0.922	pci/g	-	0.813	pci/g	-	1.060	pci/g	R
TH-TOTAL	8.480	ug/g	-	7.480	ug/g	-	9.750	ug/g	R
U-234	7.440	pci/g	-	6.040	pci/g	-	6.180	pci/g	-
U-235/236	0.315	pci/g	J	0.344	pci/g	-	0.299	pci/g	J
U-238	7.720	pci/g	-	6.480	pci/g	-	6.880	pci/g	-
U-TOTAL	27.400	mg/kg	-	25.500	mg/kg	-	28.300	mg/kg	-

TABLE F-3A
(Continued)

PHASE II - RADIOLOGICAL PARAMETERS

BORING NUMBER	1975			1976(11188)			1977		
SAMPLE NUMBER	110385			110340			110304		
	0 - 0.5			0 - 0.5			0 - 0.5		
SAMPLING DATE	03/22/93			03/22/93			03/19/93		
RADIOLOGICAL PARAMETERS	RESULTS	UNITS	VQ	RESULTS	UNITS	VQ	RESULTS	UNITS	VQ
CS-137	0.089	pci/g	J	0.112	pci/g	-	0.116	pci/g	-
GROSS ALPHA	47.500	pci/g	-	33.900	pci/g	-	20.300	pci/g	J
GROSS BETA	45.200	pci/g	-	32.200	pci/g	-	29.000	pci/g	J
NP-237	0.110	pci/g	N	0.239	pci/g	N	0.336	pci/g	N
PU-238	0.019	pci/g	-	0.039	pci/g	J	0.035	pci/g	J
PU-239/240	0.035	pci/g	UJ	0.049	pci/g	J	0.061	pci/g	J
RA-226	1.020	pci/g	J	1.440	pci/g	J	1.120	pci/g	-
RA-228	1.060	pci/g	-	1.000	pci/g	-	1.180	pci/g	-
RU-106	0.730	pci/g	UJ	0.082	pci/g	UJ	0.603	pci/g	UJ
SR-90	0.160	pci/g	J	0.498	pci/g	UJ	0.485	pci/g	UJ
TC-99	142.000	pci/g	J	0.343	pci/g	UJ	0.365	pci/g	UJ
TH-228	0.980	pci/g	-	0.823	pci/g	-	1.060	pci/g	-
TH-230	3.520	pci/g	-	1.700	pci/g	-	1.920	pci/g	-
TH-232	0.190	pci/g	-	0.927	pci/g	-	0.859	pci/g	-
TH-TOTAL	8.360	ug/g	-	8.530	ug/g	-	7.900	ug/g	-
U-234	6.620	pci/g	-	3.200	pci/g	-	3.320	pci/g	-
U-235/236	0.350	pci/g	J	0.226	pci/g	J	0.170	pci/g	J
U-238	6.920	pci/g	-	3.540	pci/g	-	4.150	pci/g	-
U-TOTAL	23.800	mg/kg	-	10.400	mg/kg	-	19.000	mg/kg	-

0563

5174

TABLE F-3A
(Continued)

PHASE II - RADIOLOGICAL PARAMETERS

BORING NUMBER	1978			SF-SS-10(11186)			SF-SS-11(11187)		
SAMPLE NUMBER	110335			110317			110321		
	0 - 0.5			0 - 0.5			0 - 0.5		
SAMPLING DATE	03/22/93			03/19/93			03/19/93		
RADIOLOGICAL PARAMETERS	RESULTS	UNITS	VQ	RESULTS	UNITS	VQ	RESULTS	UNITS	VQ
CS-137	0.799	pci/g	-	0.583	pci/g	-	0.196	pci/g	-
GROSS ALPHA	41.800	pci/g	-	237.000	pci/g	J	39.300	pci/g	-
GROSS BETA	43.500	pci/g	-	113.000	pci/g	J	43.200	pci/g	-
NP-237	0.177	pci/g	N	0.226	pci/g	N	0.162	pci/g	R
PU-238	0.058	pci/g	J	0.046	pci/g	J	0.162	pci/g	R
PU-239/240	0.058	pci/g	J	0.065	pci/g	J	0.078	pci/g	R
RA-226	1.220	pci/g	J	30.800	pci/g	-	1.160	pci/g	-
RA-228	0.973	pci/g	-	1.650	pci/g	-	1.920	pci/g	-
RU-106	0.616	pci/g	UJ	0.956	pci/g	UJ	0.853	pci/g	UJ
SR-90	1.000	pci/g	-	0.396	pci/g	UJ	0.420	pci/g	UJ
TC-99	0.361	pci/g	UJ	0.371	pci/g	UJ	0.374	pci/g	UJ
TH-228	1.020	pci/g	-	1.250	pci/g	-	1.710	pci/g	-
TH-230	1.810	pci/g	-	13.800	pci/g	-	2.220	pci/g	-
TH-232	0.903	pci/g	-	1.200	pci/g	-	1.420	pci/g	-
TH-TOTAL	8.310	ug/g	-	11.040	ug/g	-	13.100	ug/g	-
U-234	4.980	pci/g	-	8.010	pci/g	-	13.700	pci/g	-
U-235/236	0.210	pci/g	J	0.346	pci/g	J	0.771	pci/g	-
U-238	5.350	pci/g	-	9.060	pci/g	-	15.100	pci/g	-
U-TOTAL	18.800	mg/kg	-	36.000	mg/kg	-	50.600	mg/kg	-

TABLE F-3A
(Continued)

PHASE II - RADIOLOGICAL PARAMETERS

BORING NUMBER	SF-SS-16			SF-SS-17			SF-SS-18		
SAMPLE NUMBER	110343			110297			110287		
	0 - 0.5			0 - 0.5			0 - 0.5		
SAMPLING DATE	03/22/93			03/18/93			03/18/93		
RADIOLOGICAL PARAMETERS	RESULTS	UNITS	VQ	RESULTS	UNITS	VQ	RESULTS	UNITS	VQ
CS-137	0.350	pci/g	-	0.289	pci/g	-	0.088	pci/g	UJ
GROSS ALPHA	29.900	pci/g	-	30.300	pci/g	-	22.500	pci/g	-
GROSS BETA	32.200	pci/g	-	31.800	pci/g	-	27.700	pci/g	-
NP-237	0.092	pci/g	N	0.321	pci/g	R	0.052	pci/g	U
PU-238	0.051	pci/g	UJ	0.284	pci/g	R	0.125	pci/g	J
PU-239/240	0.049	pci/g	J	0.169	pci/g	R	0.132	pci/g	UJ
RA-226	1.330	pci/g	J	1.920	pci/g	-	1.040	pci/g	-
RA-228	1.200	pci/g	-	1.310	pci/g	-	0.917	pci/g	-
RU-106	0.826	pci/g	UJ	0.800	pci/g	UJ	0.635	pci/g	UJ
SR-90	0.491	pci/g	UJ	0.508	pci/g	UJ	0.942	pci/g	J
TC-99	0.346	pci/g	UJ	0.371	pci/g	UJ	0.361	pci/g	UJ
TH-228	1.080	pci/g	-	0.819	pci/g	R	0.815	pci/g	-
TH-230	2.060	pci/g	-	3.790	pci/g	R	1.530	pci/g	-
TH-232	0.835	pci/g	-	0.857	pci/g	R	0.929	pci/g	-
TH-TOTAL	7.680	ug/g	-	7.810	ug/g	R	8.460	ug/g	-
U-234	6.440	pci/g	-	4.940	pci/g	J	2.730	pci/g	J
U-235/236	0.285	pci/g	J	0.258	pci/g	J	0.149	pci/g	J
U-238	6.530	pci/g	-	5.990	pci/g	J	2.870	pci/g	J
U-TOTAL	1.860	mg/kg	-	28.400	mg/kg	-	17.200	mg/kg	-

0565

5174

TABLE F-3A
(Continued)

PHASE II - RADIOLOGICAL PARAMETERS

BORING NUMBER	SF-SS-19			SF-SS-20			SF-SS-21		
SAMPLE NUMBER	110365			110290			110307		
	0 - 0.5			0 - 0.5			0 - 0.5		
SAMPLING DATE	03/22/93			03/19/93			03/18/93		
RADIOLOGICAL PARAMETERS	RESULTS	UNITS	VQ	RESULTS	UNITS	VQ	RESULTS	UNITS	VQ
CS-137	0.415	pci/g	-	0.313	pci/g	-	0.565	pci/g	-
GROSS ALPHA	28.600	pci/g	-	42.600	pci/g	-	50.700	pci/g	-
GROSS BETA	41.000	pci/g	-	34.500	pci/g	-	32.300	pci/g	-
NP-237	0.110	pci/g	N	0.253	pci/g	R	0.056	pci/g	N
PU-238	0.057	pci/g	J	0.144	pci/g	R	0.039	pci/g	UJ
PU-239/240	0.045	pci/g	J	0.144	pci/g	R	0.026	pci/g	UJ
RA-226	1.430	pci/g	-	1.060	pci/g	-	3.240	pci/g	-
RA-228	1.160	pci/g	-	1.260	pci/g	-	1.290	pci/g	-
RU-106	0.841	pci/g	UJ	0.759	pci/g	UJ	0.794	pci/g	UJ
SR-90	0.481	pci/g	UJ	0.744	pci/g	UJ	0.601	pci/g	UJ
TC-99	0.339	pci/g	UJ	0.363	pci/g	UJ	0.362	pci/g	UJ
TH-228	0.863	pci/g	-	1.110	pci/g	R	1.250	pci/g	R
TH-230	2.330	pci/g	-	8.090	pci/g	R	7.840	pci/g	R
TH-232	0.674	pci/g	-	1.270	pci/g	R	1.000	pci/g	R
TH-TOTAL	6.200	ug/g	-	11.600	ug/g	R	9.140	ug/g	R
U-234	4.260	pci/g	-	11.560	pci/g	J	7.930	pci/g	J
U-235/236	0.166	pci/g	J	0.470	pci/g	J	0.458	pci/g	J
U-238	5.460	pci/g	-	11.680	pci/g	J	9.320	pci/g	J
U-TOTAL	16.300	mg/kg	-	36.400	mg/kg	-	24.500	mg/kg	-

TABLE F-3A
(Continued)

PHASE II - CHEMICAL PARAMETERS

BORING NUMBER	11188 (1976)			1964			1965		
SAMPLE NUMBER	110340			110331			110351		
	0-0.5			0-0.5			0-0.5		
SAMPLING DATE	03/22/93			03/22/93			03/22/93		
CHEMICAL PARAMETERS	RESULTS	UNITS	L VQ	RESULTS	UNITS	L VQ	RESULTS	UNITS	L VQ
Inorganics									
Aluminum	10700.000	mg/kg	C -	10700.000	mg/kg	C -	12100.000	mg/kg	C -
Antimony	1.100	mg/kg	C R	1.200	mg/kg	C R	1.200	mg/kg	C R
Arsenic	7.500	mg/kg	C -	7.900	mg/kg	C -	4.900	mg/kg	C -
Barium	76.500	mg/kg	C -	77.200	mg/kg	C -	86.200	mg/kg	C -
Beryllium	0.870	mg/kg	C -	0.860	mg/kg	C -	0.980	mg/kg	C -
Cadmium	1.100	mg/kg	C U	1.200	mg/kg	C U	1.200	mg/kg	C U
Calcium	86000.000	mg/kg	C -	41500.000	mg/kg	C -	33900.000	mg/kg	C -
Chromium	12.800	mg/kg	C -	13.100	mg/kg	C -	15.100	mg/kg	C -
Cobalt	5.800	mg/kg	C -	7.100	mg/kg	C -	7.700	mg/kg	C -
Copper	14.300	mg/kg	C -	16.900	mg/kg	C -	19.600	mg/kg	C -
Cyanide	0.120	mg/kg	C U	0.130	mg/kg	C U	0.140	mg/kg	C U
Iron	17700.000	mg/kg	C -	18700.000	mg/kg	C -	20700.000	mg/kg	C -
Lead	14.300	mg/kg	C J	26.900	mg/kg	C J	22.100	mg/kg	C J
Magnesium	29700.000	mg/kg	C J	13700.000	mg/kg	C J	12800.000	mg/kg	C J
Manganese	478.000	mg/kg	C -	715.000	mg/kg	C -	423.000	mg/kg	C -
Mercury	0.120	mg/kg	C U	0.120	mg/kg	C U	0.130	mg/kg	C U
Molybdenum	5.100	mg/kg	C -	5.500	mg/kg	C -	5.500	mg/kg	C -
Nickel	16.200	mg/kg	C -	18.200	mg/kg	C -	20.100	mg/kg	C -
Potassium	1340.000	mg/kg	C -	1940.000	mg/kg	C -	2170.000	mg/kg	C -
Selenium	0.480	mg/kg	C UJ	0.480	mg/kg	C UJ	0.500	mg/kg	C UJ
Silicon	526.000	mg/kg	C J	503.000	mg/kg	C J	606.000	mg/kg	C J
Silver	5.000	mg/kg	C -	5.300	mg/kg	C -	6.500	mg/kg	C -
Sodium	120.000	mg/kg	C -	91.300	mg/kg	C -	90.200	mg/kg	C -
Thallium	0.480	mg/kg	C U	0.480	mg/kg	C U	0.500	mg/kg	C U
Vanadium	26.700	mg/kg	C -	27.700	mg/kg	C -	30.800	mg/kg	C -
Zinc	44.400	mg/kg	C -	55.400	mg/kg	C -	62.900	mg/kg	C -
Volatile Organics									
1,1,1-Trichloroethane	6.000	ug/kg	C U	6.000	ug/kg	C U	7.000	ug/kg	C U
1,1,2,2-Tetrachloroethane	6.000	ug/kg	C U	6.000	ug/kg	C U	7.000	ug/kg	C U
1,1,2-Trichloroethane	6.000	ug/kg	C U	6.000	ug/kg	C U	7.000	ug/kg	C U
1,1-Dichloroethane	6.000	ug/kg	C UJ	6.000	ug/kg	C UJ	7.000	ug/kg	C UJ
1,1-Dichloroethene	6.000	ug/kg	C U	6.000	ug/kg	C U	7.000	ug/kg	C U
1,2-Dichloroethane	6.000	ug/kg	C U	6.000	ug/kg	C U	7.000	ug/kg	C U
1,2-Dichloroethene	6.000	ug/kg	C U	6.000	ug/kg	C U	7.000	ug/kg	C U
1,2-Dichloropropane	6.000	ug/kg	C U	6.000	ug/kg	C U	7.000	ug/kg	C U
2-Butanone	13.000	ug/kg	C UJ	13.000	ug/kg	C UJ	14.000	ug/kg	C UJ
2-Hexanone	13.000	ug/kg	C U	13.000	ug/kg	C U	14.000	ug/kg	C U
4-Methyl-2-pentanone	13.000	ug/kg	C U	13.000	ug/kg	C U	14.000	ug/kg	C U
Acetone	13.000	ug/kg	C U	13.000	ug/kg	C U	41.000	ug/kg	C U
Benzene	6.000	ug/kg	C U	6.000	ug/kg	C U	7.000	ug/kg	C U

0567
5174

TABLE F-3A
(Continued)

PHASE II - CHEMICAL PARAMETERS

BORING NUMBER	11188 (1976)			1964			1965		
SAMPLE NUMBER	110340			110331			110351		
	0-0.5			0-0.5			0-0.5		
SAMPLING DATE	03/22/93			03/22/93			03/22/93		
CHEMICAL PARAMETERS	RESULTS	UNITS	L VQ	RESULTS	UNITS	L VQ	RESULTS	UNITS	L VQ
Volatile Organics									
Bromodichloromethane	6.000	ug/kg	C U	6.000	ug/kg	C U	7.000	ug/kg	C U
Bromoform	6.000	ug/kg	C U	6.000	ug/kg	C U	7.000	ug/kg	C U
Bromomethane	13.000	ug/kg	C UJ	13.000	ug/kg	C UJ	14.000	ug/kg	C UJ
Carbon Tetrachloride	6.000	ug/kg	C U	6.000	ug/kg	C U	7.000	ug/kg	C U
Carbon disulfide	6.000	ug/kg	C U	6.000	ug/kg	C U	7.000	ug/kg	C U
Chlorobenzene	6.000	ug/kg	C U	6.000	ug/kg	C U	7.000	ug/kg	C U
Chloroethane	13.000	ug/kg	C UJ	13.000	ug/kg	C UJ	14.000	ug/kg	C UJ
Chloroform	6.000	ug/kg	C U	6.000	ug/kg	C U	7.000	ug/kg	C U
Chloromethane	13.000	ug/kg	C U	13.000	ug/kg	C U	14.000	ug/kg	C U
Dibromochloromethane	6.000	ug/kg	C U	6.000	ug/kg	C U	7.000	ug/kg	C U
Ethylbenzene	6.000	ug/kg	C U	6.000	ug/kg	C U	7.000	ug/kg	C U
Methylene chloride	13.000	ug/kg	C UJ	13.000	ug/kg	C UJ	14.000	ug/kg	C UJ
Styrene	6.000	ug/kg	C U	6.000	ug/kg	C U	7.000	ug/kg	C U
Tetrachloroethene	6.000	ug/kg	C U	6.000	ug/kg	C U	7.000	ug/kg	C U
Toluene	6.000	ug/kg	C U	6.000	ug/kg	C U	7.000	ug/kg	C U
Trichloroethene	6.000	ug/kg	C U	6.000	ug/kg	C U	7.000	ug/kg	C U
Vinyl Acetate	13.000	ug/kg	C U	13.000	ug/kg	C U	14.000	ug/kg	C U
Vinyl chloride	13.000	ug/kg	C U	13.000	ug/kg	C U	14.000	ug/kg	C U
Xylenes, Total	6.000	ug/kg	C U	6.000	ug/kg	C U	7.000	ug/kg	C U
cis-1,3-Dichloropropene	6.000	ug/kg	C U	6.000	ug/kg	C U	7.000	ug/kg	C U
trans-1,3-Dichloropropene	6.000	ug/kg	C U	6.000	ug/kg	C U	7.000	ug/kg	C U
Semivolatile Organics									
1,2,4-Trichlorobenzene	430.000	ug/kg	C U	430.000	ug/kg	C U	480.000	ug/kg	C U
1,2-Dichlorobenzene	430.000	ug/kg	C U	430.000	ug/kg	C U	480.000	ug/kg	C U
1,2-Diphenylhydrazine	430.000	ug/kg	C UJ	430.000	ug/kg	C U	480.000	ug/kg	C U
1,3-Dichlorobenzene	430.000	ug/kg	C U	430.000	ug/kg	C U	480.000	ug/kg	C U
1,4-Dichlorobenzene	430.000	ug/kg	C U	430.000	ug/kg	C U	480.000	ug/kg	C U
2,4,5-Trichlorophenol	1000.000	ug/kg	C U	1000.000	ug/kg	C U	1200.000	ug/kg	C U
2,4,6-Trichlorophenol	430.000	ug/kg	C U	430.000	ug/kg	C U	480.000	ug/kg	C U
2,4-Dichlorophenol	430.000	ug/kg	C U	430.000	ug/kg	C U	480.000	ug/kg	C U
2,4-Dimethylphenol	430.000	ug/kg	C U	430.000	ug/kg	C U	480.000	ug/kg	C U
2,4-Dinitrophenol	2100.000	ug/kg	C UJ	2100.000	ug/kg	C UJ	2300.000	ug/kg	C UJ
2,4-Dinitrotoluene	430.000	ug/kg	C UJ	430.000	ug/kg	C U	480.000	ug/kg	C U
2,6-Dinitrotoluene	430.000	ug/kg	C U	430.000	ug/kg	C U	480.000	ug/kg	C UJ
2-Chloronaphthalene	430.000	ug/kg	C U	430.000	ug/kg	C U	480.000	ug/kg	C U
2-Chlorophenol	430.000	ug/kg	C U	430.000	ug/kg	C U	480.000	ug/kg	C U
2-Methylnaphthalene	430.000	ug/kg	C U	430.000	ug/kg	C U	480.000	ug/kg	C U
2-Methylphenol	430.000	ug/kg	C U	430.000	ug/kg	C U	480.000	ug/kg	C U
2-Nitroaniline	1000.000	ug/kg	C U	1000.000	ug/kg	C U	1200.000	ug/kg	C U
2-Nitrophenol	430.000	ug/kg	C U	430.000	ug/kg	C U	480.000	ug/kg	C U

TABLE F-3A
(Continued)

PHASE II - CHEMICAL PARAMETERS

BORING NUMBER	11188 (1976)			1964			1965		
SAMPLE NUMBER	110340			110331			110351		
	0-0.5			0-0.5			0-0.5		
SAMPLING DATE	03/22/93			03/22/93			03/22/93		
CHEMICAL PARAMETERS	RESULTS	UNITS	L VQ	RESULTS	UNITS	L VQ	RESULTS	UNITS	L VQ
Semivolatile Organics									
3,3'-Dichlorobenzidine	430.000	ug/kg	C U	430.000	ug/kg	C U	480.000	ug/kg	C U
3-Nitroaniline	1000.000	ug/kg	C U	1000.000	ug/kg	C U	1200.000	ug/kg	C U
4,6-Dinitro-2-methylphenol	1000.000	ug/kg	C UJ	1000.000	ug/kg	C UJ	1200.000	ug/kg	C UJ
4-Bromophenyl phenyl ether	430.000	ug/kg	C UJ	430.000	ug/kg	C U	480.000	ug/kg	C U
4-Chloro-3-methylphenol	430.000	ug/kg	C U	430.000	ug/kg	C U	480.000	ug/kg	C U
4-Chlorophenylphenyl ether	430.000	ug/kg	C UJ	430.000	ug/kg	C U	480.000	ug/kg	C U
4-Methylphenol	430.000	ug/kg	C U	430.000	ug/kg	C U	480.000	ug/kg	C U
4-Nitroaniline	1000.000	ug/kg	C UJ	1000.000	ug/kg	C U	1200.000	ug/kg	C U
4-Nitrophenol	1000.000	ug/kg	C UJ	1000.000	ug/kg	C U	1200.000	ug/kg	C U
Acenaphthene	430.000	ug/kg	C U	430.000	ug/kg	C U	480.000	ug/kg	C U
Acenaphthylene	55.000	ug/kg	C J	430.000	ug/kg	C U	480.000	ug/kg	C U
Anthracene	430.000	ug/kg	C U	430.000	ug/kg	C U	480.000	ug/kg	C U
Benzo(a)anthracene	180.000	ug/kg	C J	430.000	ug/kg	C U	480.000	ug/kg	C U
Benzo(a)pyrene	280.000	ug/kg	C J	430.000	ug/kg	C U	480.000	ug/kg	C U
Benzo(b)fluoranthene	240.000	ug/kg	C J	430.000	ug/kg	C U	480.000	ug/kg	C U
Benzo(g,h,i)perylene	210.000	ug/kg	C J	430.000	ug/kg	C U	480.000	ug/kg	C U
Benzo(k)fluoranthene	290.000	ug/kg	C J	430.000	ug/kg	C U	480.000	ug/kg	C U
Benzoic acid	56.000	ug/kg	C J	270.000	ug/kg	C J	95.000	ug/kg	C J
Benzyl alcohol	430.000	ug/kg	C U	430.000	ug/kg	C U	480.000	ug/kg	C U
Butyl benzyl phthalate	430.000	ug/kg	C U	430.000	ug/kg	C U	480.000	ug/kg	C U
Carbazole	430.000	ug/kg	C U	430.000	ug/kg	C U	480.000	ug/kg	C U
Chrysene	240.000	ug/kg	C J	430.000	ug/kg	C U	480.000	ug/kg	C U
Di-n-butyl phthalate	430.000	ug/kg	C U	430.000	ug/kg	C U	480.000	ug/kg	C U
Di-n-octyl phthalate	430.000	ug/kg	C U	430.000	ug/kg	C U	480.000	ug/kg	C U
Dibenzo(a,h)anthracene	69.000	ug/kg	C J	430.000	ug/kg	C U	480.000	ug/kg	C U
Dibenzofuran	430.000	ug/kg	C UJ	430.000	ug/kg	C U	480.000	ug/kg	C U
Diethyl phthalate	430.000	ug/kg	C UJ	430.000	ug/kg	C U	480.000	ug/kg	C U
Dimethyl phthalate	430.000	ug/kg	C U	430.000	ug/kg	C U	480.000	ug/kg	C U
Fluoranthene	320.000	ug/kg	C J	45.000	ug/kg	C J	480.000	ug/kg	C U
Fluorene	430.000	ug/kg	C UJ	430.000	ug/kg	C U	480.000	ug/kg	C U
Hexachlorobenzene	430.000	ug/kg	C UJ	430.000	ug/kg	C U	480.000	ug/kg	C U
Hexachlorobutadiene	430.000	ug/kg	C U	430.000	ug/kg	C U	480.000	ug/kg	C U
Hexachlorocyclopentadiene	430.000	ug/kg	C U	430.000	ug/kg	C U	480.000	ug/kg	C U
Hexachloroethane	430.000	ug/kg	C U	430.000	ug/kg	C U	480.000	ug/kg	C U
Indeno(1,2,3-cd)pyrene	210.000	ug/kg	C J	430.000	ug/kg	C U	480.000	ug/kg	C U
Isophorone	430.000	ug/kg	C U	430.000	ug/kg	C U	480.000	ug/kg	C U
N-Nitroso-di-n-propylamine	430.000	ug/kg	C U	430.000	ug/kg	C U	480.000	ug/kg	C U
N-Nitrosodimethylamine	430.000	ug/kg	C U	430.000	ug/kg	C U	480.000	ug/kg	C U
N-Nitrosodiphenylamine	430.000	ug/kg	C UJ	430.000	ug/kg	C U	480.000	ug/kg	C U
Naphthalene	430.000	ug/kg	C U	430.000	ug/kg	C U	480.000	ug/kg	C U
Nitrobenzene	430.000	ug/kg	C U	430.000	ug/kg	C U	480.000	ug/kg	C U
Pentachlorophenol	1000.000	ug/kg	C U	1000.000	ug/kg	C U	1200.000	ug/kg	C U

0569

5174

TABLE F-3A
(Continued)

PHASE II - CHEMICAL PARAMETERS

BORING NUMBER	11188 (1976)			1964			1965		
SAMPLE NUMBER	110340			110331			110351		
	0-0.5			0-0.5			0-0.5		
SAMPLING DATE	03/22/93			03/22/93			03/22/93		
CHEMICAL PARAMETERS	RESULTS	UNITS	L VQ	RESULTS	UNITS	L VQ	RESULTS	UNITS	L VQ
Semivolatile Organics									
Phenanthrene	81.000	ug/kg	C J	430.000	ug/kg	C U	480.000	ug/kg	C U
Phenol	430.000	ug/kg	C U	430.000	ug/kg	C U	480.000	ug/kg	C U
Pyrene	270.000	ug/kg	C J	430.000	ug/kg	C U	480.000	ug/kg	C U
Tributyl phosphate	430.000	ug/kg	C UJ	430.000	ug/kg	C U	480.000	ug/kg	C U
bis(2-Chloroethoxy)methane	430.000	ug/kg	C U	430.000	ug/kg	C U	480.000	ug/kg	C U
bis(2-Chloroethyl)ether	430.000	ug/kg	C U	430.000	ug/kg	C U	480.000	ug/kg	C U
bis(2-Chloroisopropyl) ether	430.000	ug/kg	C U	430.000	ug/kg	C U	480.000	ug/kg	C U
bis(2-Ethylhexyl) phthalate	80.000	ug/kg	C J	91.000	ug/kg	C J	110.000	ug/kg	C J
p-Chloroaniline	430.000	ug/kg	C U	430.000	ug/kg	C U	480.000	ug/kg	C U
Pesticide Organics/PCBs									
4,4'-DDD	4.300	ug/kg	C U	4.300	ug/kg	C U	4.800	ug/kg	C U
4,4'-DDE	4.300	ug/kg	C U	4.300	ug/kg	C U	4.800	ug/kg	C U
4,4'-DDT	4.300	ug/kg	C U	4.300	ug/kg	C U	4.800	ug/kg	C U
Aldrin	2.200	ug/kg	C U	2.200	ug/kg	C U	2.500	ug/kg	C U
Aroclor-1016	43.000	ug/kg	C U	43.000	ug/kg	C U	48.000	ug/kg	C U
Aroclor-1221	86.000	ug/kg	C U	87.000	ug/kg	C U	97.000	ug/kg	C U
Aroclor-1232	43.000	ug/kg	C U	43.000	ug/kg	C U	48.000	ug/kg	C U
Aroclor-1242	43.000	ug/kg	C U	43.000	ug/kg	C U	48.000	ug/kg	C U
Aroclor-1248	43.000	ug/kg	C U	43.000	ug/kg	C U	48.000	ug/kg	C U
Aroclor-1254	43.000	ug/kg	C U	43.000	ug/kg	C U	48.000	ug/kg	C U
Aroclor-1260	43.000	ug/kg	C U	43.000	ug/kg	C U	48.000	ug/kg	C U
Dieldrin	4.300	ug/kg	C U	4.300	ug/kg	C U	4.800	ug/kg	C U
Endosulfan II	4.300	ug/kg	C U	4.300	ug/kg	C U	4.800	ug/kg	C U
Endosulfan sulfate	4.300	ug/kg	C U	4.300	ug/kg	C U	4.800	ug/kg	C U
Endosulfan-I	2.200	ug/kg	C U	2.200	ug/kg	C U	2.500	ug/kg	C U
Endrin	4.300	ug/kg	C U	4.300	ug/kg	C U	4.800	ug/kg	C U
Endrin aldehyde	4.300	ug/kg	C U	4.300	ug/kg	C U	4.800	ug/kg	C U
Endrin ketone	5.900	ug/kg	C J	4.300	ug/kg	C U	4.800	ug/kg	C U
Heptachlor	2.200	ug/kg	C U	2.200	ug/kg	C U	2.500	ug/kg	C U
Heptachlor epoxide	2.200	ug/kg	C U	2.200	ug/kg	C U	2.500	ug/kg	C U
Methoxychlor	22.000	ug/kg	C U	22.000	ug/kg	C U	25.000	ug/kg	C U
Toxaphene	220.000	ug/kg	C U	220.000	ug/kg	C U	250.000	ug/kg	C U
alpha-BHC	2.200	ug/kg	C U	2.200	ug/kg	C U	2.500	ug/kg	C U
alpha-Chlordane	2.200	ug/kg	C U	2.200	ug/kg	C U	2.500	ug/kg	C U
beta-BHC	2.200	ug/kg	C U	2.200	ug/kg	C U	2.500	ug/kg	C U
delta-BHC	2.200	ug/kg	C U	2.200	ug/kg	C U	2.500	ug/kg	C U
gamma-BHC (Lindane)	2.200	ug/kg	C U	2.200	ug/kg	C U	2.500	ug/kg	C U
gamma-Chlordane	2.200	ug/kg	C U	2.200	ug/kg	C U	2.500	ug/kg	C U

TABLE F-3A
(Continued)

PHASE II - CHEMICAL PARAMETERS

BORING NUMBER	1966				1967				1968			
SAMPLE NUMBER	110355				110358				110392			
	0-0.5				0-0.5				0-0.5			
SAMPLING DATE	03/22/93				03/22/93				03/22/93			
CHEMICAL PARAMETERS	RESULTS	UNITS	L	VQ	RESULTS	UNITS	L	VQ	RESULTS	UNITS	L	VQ
Inorganics												
Aluminum	9010.000	mg/kg	D	-	8260.000	mg/kg	C	-	8640.000	mg/kg	C	-
Antimony	1.300	mg/kg	D	R	1.200	mg/kg	C	R	0.970	mg/kg	C	R
Arsenic	7.300	mg/kg	D	-	8.400	mg/kg	C	-	5.500	mg/kg	C	J
Barium	125.000	mg/kg	D	-	57.400	mg/kg	C	-	65.500	mg/kg	C	-
Beryllium	0.910	mg/kg	D	-	0.710	mg/kg	C	-	0.570	mg/kg	C	-
Cadmium	1.300	mg/kg	D	U	1.200	mg/kg	C	U	0.970	mg/kg	C	U
Calcium	32900.000	mg/kg	D	-	58400.000	mg/kg	C	-	71300.000	mg/kg	C	-
Chromium	11.300	mg/kg	D	-	10.600	mg/kg	C	-	10.900	mg/kg	C	-
Cobalt	13.900	mg/kg	D	-	6.500	mg/kg	C	-	5.700	mg/kg	C	-
Copper	18.300	mg/kg	D	-	14.500	mg/kg	C	-	14.100	mg/kg	C	-
Cyanide	0.180	mg/kg	D	-	0.130	mg/kg	C	-	0.130	mg/kg	C	U
Iron	18000.000	mg/kg	D	-	16800.000	mg/kg	C	-	15900.000	mg/kg	C	-
Lead	23.100	mg/kg	D	J	17.300	mg/kg	C	J	13.700	mg/kg	C	J
Magnesium	11900.000	mg/kg	D	J	17900.000	mg/kg	C	J	31600.000	mg/kg	C	J
Manganese	1180.000	mg/kg	D	-	460.000	mg/kg	C	-	484.000	mg/kg	C	-
Mercury	0.120	mg/kg	D	U	0.110	mg/kg	C	U	0.120	mg/kg	C	U
Molybdenum	5.500	mg/kg	D	-	6.200	mg/kg	C	-	4.300	mg/kg	C	-
Nickel	22.700	mg/kg	D	-	16.900	mg/kg	C	-	14.700	mg/kg	C	-
Potassium	1530.000	mg/kg	D	-	1480.000	mg/kg	C	-	1400.000	mg/kg	C	-
Selenium	0.620	mg/kg	D	J	0.450	mg/kg	C	UJ	0.520	mg/kg	C	J
Silicon	498.000	mg/kg	D	J	580.000	mg/kg	C	J	460.000	mg/kg	C	J
Silver	5.700	mg/kg	D	-	5.500	mg/kg	C	-	4.500	mg/kg	C	-
Sodium	79.000	mg/kg	D	-	97.200	mg/kg	C	-	121.000	mg/kg	C	-
Thallium	0.540	mg/kg	D	U	0.450	mg/kg	C	U	0.480	mg/kg	C	U
Vanadium	27.100	mg/kg	D	-	22.500	mg/kg	C	-	23.400	mg/kg	C	-
Zinc	47.800	mg/kg	D	-	44.300	mg/kg	C	-	44.800	mg/kg	C	-
Volatile Organics												
1,1,1-Trichloroethane	7.000	ug/kg	D	U	12.000	ug/kg	C	U	7.000	ug/kg	C	U
1,1,2,2-Tetrachloroethane	7.000	ug/kg	D	U	12.000	ug/kg	C	U	7.000	ug/kg	C	U
1,1,2-Trichloroethane	7.000	ug/kg	D	U	12.000	ug/kg	C	U	7.000	ug/kg	C	U
1,1-Dichloroethane	7.000	ug/kg	D	UJ	12.000	ug/kg	C	U	7.000	ug/kg	C	UJ
1,1-Dichloroethene	7.000	ug/kg	D	U	12.000	ug/kg	C	U	7.000	ug/kg	C	U
1,2-Dichloroethane	7.000	ug/kg	D	U	12.000	ug/kg	C	U	7.000	ug/kg	C	U
1,2-Dichloroethene	7.000	ug/kg	D	U	12.000	ug/kg	C	U	7.000	ug/kg	C	U
1,2-Dichloropropane	7.000	ug/kg	D	U	12.000	ug/kg	C	U	7.000	ug/kg	C	U
2-Butanone	14.000	ug/kg	D	UJ	12.000	ug/kg	C	U	13.000	ug/kg	C	UJ
2-Hexanone	14.000	ug/kg	D	U	12.000	ug/kg	C	U	13.000	ug/kg	C	U
4-Methyl-2-pentanone	14.000	ug/kg	D	U	12.000	ug/kg	C	U	13.000	ug/kg	C	U
Acetone	14.000	ug/kg	D	U	10.000	ug/kg	C	UJ	19.000	ug/kg	C	-
Benzene	7.000	ug/kg	D	U	12.000	ug/kg	C	U	7.000	ug/kg	C	U

0571

574

TABLE F-3A
(Continued)

PHASE II - CHEMICAL PARAMETERS

BORING NUMBER	1966			1967			1968		
SAMPLE NUMBER	110355			110358			110392		
	0-0.5			0-0.5			0-0.5		
SAMPLING DATE	03/22/93			03/22/93			03/22/93		
CHEMICAL PARAMETERS	RESULTS	UNITS	L VQ	RESULTS	UNITS	L VQ	RESULTS	UNITS	L VQ
Volatile Organics									
Bromodichloromethane	7.000	ug/kg	D U	12.000	ug/kg	C U	7.000	ug/kg	C U
Bromoform	7.000	ug/kg	D U	12.000	ug/kg	C U	7.000	ug/kg	C U
Bromomethane	14.000	ug/kg	D UJ	12.000	ug/kg	C U	13.000	ug/kg	C UJ
Carbon Tetrachloride	7.000	ug/kg	D U	12.000	ug/kg	C U	7.000	ug/kg	C U
Carbon disulfide	7.000	ug/kg	D U	12.000	ug/kg	C U	7.000	ug/kg	C U
Chlorobenzene	7.000	ug/kg	D U	12.000	ug/kg	C U	7.000	ug/kg	C U
Chloroethane	14.000	ug/kg	D UJ	12.000	ug/kg	C U	13.000	ug/kg	C UJ
Chloroform	7.000	ug/kg	D U	12.000	ug/kg	C U	7.000	ug/kg	C U
Chloromethane	14.000	ug/kg	D U	12.000	ug/kg	C UJ	13.000	ug/kg	C U
Dibromochloromethane	7.000	ug/kg	D U	12.000	ug/kg	C U	7.000	ug/kg	C U
Ethylbenzene	7.000	ug/kg	D U	12.000	ug/kg	C U	7.000	ug/kg	C U
Methylene chloride	5.000	ug/kg	D J	10.000	ug/kg	C UJ	7.000	ug/kg	C UJ
Styrene	7.000	ug/kg	D U	12.000	ug/kg	C U	7.000	ug/kg	C U
Tetrachloroethene	7.000	ug/kg	D U	12.000	ug/kg	C U	7.000	ug/kg	C U
Toluene	7.000	ug/kg	D U	12.000	ug/kg	C U	7.000	ug/kg	C U
Trichloroethene	7.000	ug/kg	D U	12.000	ug/kg	C U	7.000	ug/kg	C U
Vinyl Acetate	14.000	ug/kg	D U	12.000	ug/kg	C UJ	13.000	ug/kg	C U
Vinyl chloride	14.000	ug/kg	D U	12.000	ug/kg	C U	13.000	ug/kg	C U
Xylenes, Total	7.000	ug/kg	D U	12.000	ug/kg	C U	7.000	ug/kg	C U
cis-1,3-Dichloropropene	7.000	ug/kg	D U	12.000	ug/kg	C U	7.000	ug/kg	C U
trans-1,3-Dichloropropene	7.000	ug/kg	D U	12.000	ug/kg	C U	7.000	ug/kg	C U
Semivolatile Organics									
1,2,4-Trichlorobenzene	460.000	ug/kg	D U	430.000	ug/kg	C U	430.000	ug/kg	C U
1,2-Dichlorobenzene	460.000	ug/kg	D U	430.000	ug/kg	C U	430.000	ug/kg	C U
1,2-Diphenylhydrazine	460.000	ug/kg	D U	430.000	ug/kg	C U	430.000	ug/kg	C U
1,3-Dichlorobenzene	460.000	ug/kg	D U	430.000	ug/kg	C U	430.000	ug/kg	C U
1,4-Dichlorobenzene	460.000	ug/kg	D U	430.000	ug/kg	C U	430.000	ug/kg	C U
2,4,5-Trichlorophenol	1100.000	ug/kg	D U	1000.000	ug/kg	C U	1000.000	ug/kg	C U
2,4,6-Trichlorophenol	460.000	ug/kg	D U	430.000	ug/kg	C U	430.000	ug/kg	C U
2,4-Dichlorophenol	460.000	ug/kg	D U	430.000	ug/kg	C U	430.000	ug/kg	C U
2,4-Dimethylphenol	460.000	ug/kg	D U	430.000	ug/kg	C U	430.000	ug/kg	C U
2,4-Dinitrophenol	2200.000	ug/kg	D UJ	2100.000	ug/kg	C UJ	2100.000	ug/kg	C UJ
2,4-Dinitrotoluene	460.000	ug/kg	D U	430.000	ug/kg	C U	430.000	ug/kg	C U
2,6-Dinitrotoluene	460.000	ug/kg	D U	430.000	ug/kg	C U	430.000	ug/kg	C U
2-Chloronaphthalene	460.000	ug/kg	D U	430.000	ug/kg	C U	430.000	ug/kg	C U
2-Chlorophenol	460.000	ug/kg	D U	430.000	ug/kg	C U	430.000	ug/kg	C U
2-Methylnaphthalene	460.000	ug/kg	D U	430.000	ug/kg	C U	430.000	ug/kg	C U
2-Methylphenol	460.000	ug/kg	D U	430.000	ug/kg	C U	430.000	ug/kg	C U
2-Nitroaniline	1100.000	ug/kg	D U	1000.000	ug/kg	C U	1000.000	ug/kg	C U
2-Nitrophenol	460.000	ug/kg	D U	430.000	ug/kg	C U	430.000	ug/kg	C U

TABLE F-3A
(Continued)

PHASE II - CHEMICAL PARAMETERS

BORING NUMBER	1966			1967			1968		
SAMPLE NUMBER	110355			110358			110392		
	0-0.5			0-0.5			0-0.5		
SAMPLING DATE	03/22/93			03/22/93			03/22/93		
CHEMICAL PARAMETERS	RESULTS	UNITS	L VQ	RESULTS	UNITS	L VQ	RESULTS	UNITS	L VQ
Semivolatile Organics									
3,3'-Dichlorobenzidine	460.000	ug/kg	D U	430.000	ug/kg	C U	430.000	ug/kg	C U
3-Nitroaniline	1100.000	ug/kg	D U	1000.000	ug/kg	C U	1000.000	ug/kg	C U
4,6-Dinitro-2-methylphenol	1100.000	ug/kg	D UJ	1000.000	ug/kg	C UJ	1000.000	ug/kg	C UJ
4-Bromophenyl phenyl ether	460.000	ug/kg	D U	430.000	ug/kg	C U	430.000	ug/kg	C U
4-Chloro-3-methylphenol	460.000	ug/kg	D U	430.000	ug/kg	C U	430.000	ug/kg	C U
4-Chlorophenylphenyl ether	460.000	ug/kg	D U	430.000	ug/kg	C U	430.000	ug/kg	C U
4-Methylphenol	460.000	ug/kg	D U	430.000	ug/kg	C U	430.000	ug/kg	C U
4-Nitroaniline	1100.000	ug/kg	D U	1000.000	ug/kg	C U	1000.000	ug/kg	C U
4-Nitrophenol	1100.000	ug/kg	D U	1000.000	ug/kg	C U	1000.000	ug/kg	C U
Acenaphthene	460.000	ug/kg	D U	430.000	ug/kg	C U	430.000	ug/kg	C U
Acenaphthylene	460.000	ug/kg	D U	430.000	ug/kg	C U	430.000	ug/kg	C U
Anthracene	460.000	ug/kg	D U	430.000	ug/kg	C U	430.000	ug/kg	C U
Benzo(a)anthracene	460.000	ug/kg	D U	430.000	ug/kg	C U	51.000	ug/kg	C J
Benzo(a)pyrene	460.000	ug/kg	D U	430.000	ug/kg	C U	55.000	ug/kg	C J
Benzo(b)fluoranthene	460.000	ug/kg	D U	430.000	ug/kg	C U	62.000	ug/kg	C J
Benzo(g,h,i)perylene	460.000	ug/kg	D U	430.000	ug/kg	C U	430.000	ug/kg	C U
Benzo(k)fluoranthene	460.000	ug/kg	D U	430.000	ug/kg	C U	53.000	ug/kg	C J
Benzoic acid	2200.000	ug/kg	D UJ	72.000	ug/kg	C J	60.000	ug/kg	C J
Benzyl alcohol	460.000	ug/kg	D U	430.000	ug/kg	C U	430.000	ug/kg	C U
Butyl benzyl phthalate	460.000	ug/kg	D U	430.000	ug/kg	C U	430.000	ug/kg	C U
Carbazole	460.000	ug/kg	D U	430.000	ug/kg	C U	430.000	ug/kg	C U
Chrysene	460.000	ug/kg	D U	430.000	ug/kg	C U	70.000	ug/kg	C J
Di-n-butyl phthalate	460.000	ug/kg	D U	430.000	ug/kg	C U	430.000	ug/kg	C U
Di-n-octyl phthalate	460.000	ug/kg	D U	430.000	ug/kg	C U	430.000	ug/kg	C U
Dibenzo(a,h)anthracene	460.000	ug/kg	D U	430.000	ug/kg	C U	430.000	ug/kg	C U
Dibenzofuran	460.000	ug/kg	D U	430.000	ug/kg	C U	430.000	ug/kg	C U
Diethyl phthalate	460.000	ug/kg	D U	430.000	ug/kg	C U	430.000	ug/kg	C U
Dimethyl phthalate	460.000	ug/kg	D U	430.000	ug/kg	C U	430.000	ug/kg	C U
Fluoranthene	460.000	ug/kg	D U	430.000	ug/kg	C U	110.000	ug/kg	C J
Fluorene	460.000	ug/kg	D U	430.000	ug/kg	C U	430.000	ug/kg	C U
Hexachlorobenzene	460.000	ug/kg	D U	430.000	ug/kg	C U	430.000	ug/kg	C U
Hexachlorobutadiene	460.000	ug/kg	D U	430.000	ug/kg	C U	430.000	ug/kg	C U
Hexachlorocyclopentadiene	460.000	ug/kg	D U	430.000	ug/kg	C U	430.000	ug/kg	C U
Hexachloroethane	460.000	ug/kg	D U	430.000	ug/kg	C U	430.000	ug/kg	C U
Indeno(1,2,3-cd)pyrene	460.000	ug/kg	D U	430.000	ug/kg	C U	430.000	ug/kg	C U
Isophorone	460.000	ug/kg	D U	430.000	ug/kg	C U	430.000	ug/kg	C U
N-Nitroso-di-n-propylamine	460.000	ug/kg	D U	430.000	ug/kg	C U	430.000	ug/kg	C U
N-Nitrosodimethylamine	460.000	ug/kg	D U	430.000	ug/kg	C U	430.000	ug/kg	C U
N-Nitrosodiphenylamine	460.000	ug/kg	D U	430.000	ug/kg	C U	430.000	ug/kg	C U
Naphthalene	460.000	ug/kg	D U	430.000	ug/kg	C U	430.000	ug/kg	C U
Nitrobenzene	460.000	ug/kg	D U	430.000	ug/kg	C U	430.000	ug/kg	C U
Pentachlorophenol	1100.000	ug/kg	D U	1000.000	ug/kg	C U	1000.000	ug/kg	C U

TABLE F-3A
(Continued)

PHASE II - CHEMICAL PARAMETERS

BORING NUMBER	1966				1967				1968			
SAMPLE NUMBER	110355				110358				110392			
	0-0.5				0-0.5				0-0.5			
SAMPLING DATE	03/22/93				03/22/93				03/22/93			
CHEMICAL PARAMETERS	RESULTS	UNITS	L	VQ	RESULTS	UNITS	L	VQ	RESULTS	UNITS	L	VQ
Semivolatile Organics												
Phenanthrene	460.000	ug/kg	D	U	430.000	ug/kg	C	U	430.000	ug/kg	C	U
Phenol	460.000	ug/kg	D	U	430.000	ug/kg	C	U	430.000	ug/kg	C	U
Pyrene	460.000	ug/kg	D	U	430.000	ug/kg	C	U	86.000	ug/kg	C	J
Tributyl phosphate	460.000	ug/kg	D	U	430.000	ug/kg	C	U	430.000	ug/kg	C	U
bis(2-Chloroethoxy)methane	460.000	ug/kg	D	U	430.000	ug/kg	C	U	430.000	ug/kg	C	U
bis(2-Chloroethyl)ether	460.000	ug/kg	D	U	430.000	ug/kg	C	U	430.000	ug/kg	C	U
bis(2-Chloroisopropyl) ether	460.000	ug/kg	D	U	430.000	ug/kg	C	U	430.000	ug/kg	C	U
bis(2-Ethylhexyl) phthalate	91.000	ug/kg	D	J	73.000	ug/kg	C	J	87.000	ug/kg	C	J
p-Chloroaniline	460.000	ug/kg	D	U	430.000	ug/kg	C	U	430.000	ug/kg	C	U
Pesticide Organics/PCBs												
4,4'-DDD	4.600	ug/kg	D	U	4.300	ug/kg	C	U	4.300	ug/kg	C	U
4,4'-DDE	4.600	ug/kg	D	U	4.300	ug/kg	C	U	4.300	ug/kg	C	U
4,4'-DDT	4.600	ug/kg	D	U	4.300	ug/kg	C	U	4.300	ug/kg	C	U
Aldrin	2.400	ug/kg	D	U	2.200	ug/kg	C	U	2.200	ug/kg	C	U
Aroclor-1016	46.000	ug/kg	D	U	43.000	ug/kg	C	U	43.000	ug/kg	C	U
Aroclor-1221	93.000	ug/kg	D	U	86.000	ug/kg	C	U	87.000	ug/kg	C	U
Aroclor-1232	46.000	ug/kg	D	U	43.000	ug/kg	C	U	43.000	ug/kg	C	U
Aroclor-1242	46.000	ug/kg	D	U	43.000	ug/kg	C	U	43.000	ug/kg	C	U
Aroclor-1248	46.000	ug/kg	D	U	43.000	ug/kg	C	U	43.000	ug/kg	C	U
Aroclor-1254	46.000	ug/kg	D	U	43.000	ug/kg	C	U	43.000	ug/kg	C	U
Aroclor-1260	46.000	ug/kg	D	U	43.000	ug/kg	C	U	43.000	ug/kg	C	U
Dieldrin	4.600	ug/kg	D	U	4.300	ug/kg	C	U	4.300	ug/kg	C	U
Endosulfan II	4.600	ug/kg	D	U	4.300	ug/kg	C	U	4.300	ug/kg	C	U
Endosulfan sulfate	4.600	ug/kg	D	U	4.300	ug/kg	C	U	4.300	ug/kg	C	U
Endosulfan-I	2.400	ug/kg	D	U	2.200	ug/kg	C	U	2.200	ug/kg	C	U
Endrin	4.600	ug/kg	D	U	4.300	ug/kg	C	U	4.300	ug/kg	C	U
Endrin aldehyde	4.600	ug/kg	D	U	4.300	ug/kg	C	U	4.300	ug/kg	C	U
Endrin ketone	4.600	ug/kg	D	U	4.300	ug/kg	C	U	4.300	ug/kg	C	U
Heptachlor	2.400	ug/kg	D	U	2.200	ug/kg	C	U	2.200	ug/kg	C	U
Heptachlor epoxide	2.400	ug/kg	D	U	2.200	ug/kg	C	U	2.200	ug/kg	C	U
Methoxychlor	24.000	ug/kg	D	U	22.000	ug/kg	C	U	22.000	ug/kg	C	U
Toxaphene	240.000	ug/kg	D	U	220.000	ug/kg	C	U	220.000	ug/kg	C	U
alpha-BHC	2.400	ug/kg	D	U	2.200	ug/kg	C	U	2.200	ug/kg	C	U
alpha-Chlordane	2.400	ug/kg	D	U	2.200	ug/kg	C	U	2.200	ug/kg	C	U
beta-BHC	2.400	ug/kg	D	U	2.200	ug/kg	C	U	2.200	ug/kg	C	U
delta-BHC	2.400	ug/kg	D	U	2.200	ug/kg	C	U	2.200	ug/kg	C	U
gamma-BHC (Lindane)	2.400	ug/kg	D	U	2.200	ug/kg	C	U	2.200	ug/kg	C	U
gamma-Chlordane	2.400	ug/kg	D	U	2.200	ug/kg	C	U	2.200	ug/kg	C	U

TABLE F-3A
(Continued)

PHASE II - CHEMICAL PARAMETERS

BORING NUMBER	1969				1970				1971			
SAMPLE NUMBER	110338				110372				110324			
	0-0.5				0-0.5				0-0.5			
SAMPLING DATE	03/22/93				03/22/92				03/22/93			
CHEMICAL PARAMETERS	RESULTS	UNITS	L	VQ	RESULTS	UNITS	L	VQ	RESULTS	UNITS	L	VQ
Inorganics												
Aluminum	14900.000	mg/kg	C	-	10400.000	mg/kg	C	-	10600.000	mg/kg	C	-
Antimony	1.400	mg/kg	C	R	1.900	mg/kg	C	J	1.200	mg/kg	C	R
Arsenic	9.100	mg/kg	C	-	7.700	mg/kg	C	-	5.200	mg/kg	C	-
Barium	98.700	mg/kg	C	-	82.800	mg/kg	C	-	66.700	mg/kg	C	-
Beryllium	1.500	mg/kg	C	-	0.680	mg/kg	C	-	0.750	mg/kg	C	-
Cadmium	1.400	mg/kg	C	U	0.940	mg/kg	C	U	1.200	mg/kg	C	U
Calcium	60900.000	mg/kg	C	-	40400.000	mg/kg	C	-	29700.000	mg/kg	C	-
Chromium	16.200	mg/kg	C	-	13.300	mg/kg	C	-	13.100	mg/kg	C	-
Cobalt	7.600	mg/kg	C	-	7.600	mg/kg	C	-	10.400	mg/kg	C	-
Copper	16.100	mg/kg	C	-	18.900	mg/kg	C	-	18.600	mg/kg	C	-
Cyanide	0.150	mg/kg	C	U	0.180	mg/kg	C	-	0.120	mg/kg	C	U
Iron	19500.000	mg/kg	C	-	19900.000	mg/kg	C	-	19100.000	mg/kg	C	-
Lead	15.100	mg/kg	C	J	30.000	mg/kg	C	J	14.500	mg/kg	C	J
Magnesium	17600.000	mg/kg	C	J	13000.000	mg/kg	C	J	9340.000	mg/kg	C	J
Manganese	943.000	mg/kg	C	-	609.000	mg/kg	C	-	501.000	mg/kg	C	-
Mercury	0.140	mg/kg	C	U	0.130	mg/kg	C	U	0.120	mg/kg	C	U
Molybdenum	5.600	mg/kg	C	-	5.200	mg/kg	C	-	5.600	mg/kg	C	-
Nickel	17.200	mg/kg	C	-	19.000	mg/kg	C	-	18.300	mg/kg	C	-
Potassium	1550.000	mg/kg	C	-	1730.000	mg/kg	C	-	1110.000	mg/kg	C	-
Selenium	0.620	mg/kg	C	J	0.440	mg/kg	C	UJ	0.430	mg/kg	C	UJ
Silicon	652.000	mg/kg	C	J	474.000	mg/kg	C	J	433.000	mg/kg	C	J
Silver	5.800	mg/kg	C	-	6.100	mg/kg	C	-	6.000	mg/kg	C	-
Sodium	177.000	mg/kg	C	-	78.800	mg/kg	C	-	90.000	mg/kg	C	-
Thallium	0.540	mg/kg	C	U	0.440	mg/kg	C	U	0.430	mg/kg	C	U
Vanadium	30.200	mg/kg	C	-	28.600	mg/kg	C	-	27.800	mg/kg	C	-
Zinc	48.400	mg/kg	C	-	62.100	mg/kg	C	-	51.400	mg/kg	C	-
Volatile Organics												
1,1,1-Trichloroethane	6.000	ug/kg	C	U	7.000	ug/kg	C	U	6.000	ug/kg	C	U
1,1,2,2-Tetrachloroethane	6.000	ug/kg	C	U	7.000	ug/kg	C	U	6.000	ug/kg	C	U
1,1,2-Trichloroethane	6.000	ug/kg	C	U	7.000	ug/kg	C	U	6.000	ug/kg	C	U
1,1-Dichloroethane	6.000	ug/kg	C	UJ	7.000	ug/kg	C	UJ	6.000	ug/kg	C	UJ
1,1-Dichloroethene	6.000	ug/kg	C	U	7.000	ug/kg	C	U	6.000	ug/kg	C	U
1,2-Dichloroethane	6.000	ug/kg	C	U	7.000	ug/kg	C	UJ	6.000	ug/kg	C	U
1,2-Dichloroethene	6.000	ug/kg	C	U	7.000	ug/kg	C	UJ	6.000	ug/kg	C	U
1,2-Dichloropropane	6.000	ug/kg	C	U	7.000	ug/kg	C	U	6.000	ug/kg	C	U
2-Butanone	12.000	ug/kg	C	UJ	14.000	ug/kg	C	UJ	12.000	ug/kg	C	UJ
2-Hexanone	12.000	ug/kg	C	U	14.000	ug/kg	C	U	12.000	ug/kg	C	U
4-Methyl-2-pentanone	12.000	ug/kg	C	U	14.000	ug/kg	C	U	12.000	ug/kg	C	U
Acetone	12.000	ug/kg	C	U	68.000	ug/kg	C	-	12.000	ug/kg	C	U
Benzene	6.000	ug/kg	C	U	7.000	ug/kg	C	U	6.000	ug/kg	C	U

0575

TABLE F-3A
(Continued)

PHASE II - CHEMICAL PARAMETERS

BORING NUMBER	1969			1970			1971		
SAMPLE NUMBER	110338			110372			110324		
	0-0.5			0-0.5			0-0.5		
SAMPLING DATE	03/22/93			03/22/92			03/22/93		
CHEMICAL PARAMETERS	RESULTS	UNITS	L VQ	RESULTS	UNITS	L VQ	RESULTS	UNITS	L VQ
Volatile Organics									
Bromodichloromethane	6.000	ug/kg	C U	7.000	ug/kg	C U	6.000	ug/kg	C U
Bromoform	6.000	ug/kg	C U	7.000	ug/kg	C U	6.000	ug/kg	C U
Bromomethane	12.000	ug/kg	C UJ	14.000	ug/kg	C UJ	12.000	ug/kg	C UJ
Carbon Tetrachloride	6.000	ug/kg	C U	7.000	ug/kg	C U	6.000	ug/kg	C U
Carbon disulfide	6.000	ug/kg	C U	7.000	ug/kg	C U	6.000	ug/kg	C U
Chlorobenzene	6.000	ug/kg	C U	7.000	ug/kg	C U	6.000	ug/kg	C U
Chloroethane	12.000	ug/kg	C UJ	14.000	ug/kg	C UJ	12.000	ug/kg	C UJ
Chloroform	6.000	ug/kg	C U	7.000	ug/kg	C U	6.000	ug/kg	C U
Chloromethane	12.000	ug/kg	C U	14.000	ug/kg	C U	12.000	ug/kg	C U
Dibromochloromethane	6.000	ug/kg	C U	7.000	ug/kg	C U	6.000	ug/kg	C U
Ethylbenzene	6.000	ug/kg	C U	7.000	ug/kg	C U	6.000	ug/kg	C U
Methylene chloride	12.000	ug/kg	C UJ	14.000	ug/kg	C UJ	12.000	ug/kg	C UJ
Styrene	6.000	ug/kg	C U	7.000	ug/kg	C U	6.000	ug/kg	C U
Tetrachloroethene	6.000	ug/kg	C U	7.000	ug/kg	C U	6.000	ug/kg	C U
Toluene	6.000	ug/kg	C U	2.000	ug/kg	C U	6.000	ug/kg	C U
Trichloroethene	6.000	ug/kg	C U	7.000	ug/kg	C U	6.000	ug/kg	C U
Vinyl Acetate	12.000	ug/kg	C U	14.000	ug/kg	C U	12.000	ug/kg	C U
Vinyl chloride	12.000	ug/kg	C U	14.000	ug/kg	C U	12.000	ug/kg	C U
Xylenes, Total	6.000	ug/kg	C U	7.000	ug/kg	C U	6.000	ug/kg	C U
cis-1,3-Dichloropropene	6.000	ug/kg	C U	7.000	ug/kg	C U	6.000	ug/kg	C U
trans-1,3-Dichloropropene	6.000	ug/kg	C U	7.000	ug/kg	C U	6.000	ug/kg	C U
Semivolatile Organics									
1,2,4-Trichlorobenzene	500.000	ug/kg	C U	450.000	ug/kg	C U	420.000	ug/kg	C U
1,2-Dichlorobenzene	500.000	ug/kg	C U	450.000	ug/kg	C U	420.000	ug/kg	C U
1,2-Diphenylhydrazine	500.000	ug/kg	C U	450.000	ug/kg	C U	420.000	ug/kg	C U
1,3-Dichlorobenzene	500.000	ug/kg	C U	450.000	ug/kg	C U	420.000	ug/kg	C U
1,4-Dichlorobenzene	500.000	ug/kg	C U	450.000	ug/kg	C U	420.000	ug/kg	C U
2,4,5-Trichlorophenol	1200.000	ug/kg	C U	1100.000	ug/kg	C U	1000.000	ug/kg	C U
2,4,6-Trichlorophenol	500.000	ug/kg	C U	450.000	ug/kg	C U	420.000	ug/kg	C U
2,4-Dichlorophenol	500.000	ug/kg	C U	450.000	ug/kg	C U	420.000	ug/kg	C U
2,4-Dimethylphenol	500.000	ug/kg	C U	450.000	ug/kg	C U	420.000	ug/kg	C U
2,4-Dinitrophenol	2400.000	ug/kg	C UJ	2200.000	ug/kg	C UJ	2000.000	ug/kg	C UJ
2,4-Dinitrotoluene	500.000	ug/kg	C U	450.000	ug/kg	C U	420.000	ug/kg	C U
2,6-Dinitrotoluene	500.000	ug/kg	C U	450.000	ug/kg	C U	420.000	ug/kg	C U
2-Chloronaphthalene	500.000	ug/kg	C U	450.000	ug/kg	C U	420.000	ug/kg	C U
2-Chlorophenol	500.000	ug/kg	C U	450.000	ug/kg	C U	420.000	ug/kg	C U
2-Methylnaphthalene	500.000	ug/kg	C U	450.000	ug/kg	C U	420.000	ug/kg	C U
2-Methylphenol	500.000	ug/kg	C U	450.000	ug/kg	C U	420.000	ug/kg	C U
2-Nitroaniline	1200.000	ug/kg	C U	1100.000	ug/kg	C U	1000.000	ug/kg	C U
2-Nitrophenol	500.000	ug/kg	C U	450.000	ug/kg	C U	420.000	ug/kg	C U

TABLE F-3A
(Continued)

PHASE II - CHEMICAL PARAMETERS

BORING NUMBER	1969			1970			1971		
SAMPLE NUMBER	110338			110372			110324		
	0-0.5			0-0.5			0-0.5		
SAMPLING DATE	03/22/93			03/22/92			03/22/93		
CHEMICAL PARAMETERS	RESULTS	UNITS	L VQ	RESULTS	UNITS	L VQ	RESULTS	UNITS	L VQ
Semivolatile Organics									
3,3'-Dichlorobenzidine	500.000	ug/kg	C U	450.000	ug/kg	C U	420.000	ug/kg	C U
3-Nitroaniline	1200.000	ug/kg	C U	1100.000	ug/kg	C U	1000.000	ug/kg	C U
4,6-Dinitro-2-methylphenol	1200.000	ug/kg	C UJ	1100.000	ug/kg	C UJ	1000.000	ug/kg	C UJ
4-Bromophenyl phenyl ether	500.000	ug/kg	C U	450.000	ug/kg	C U	420.000	ug/kg	C U
4-Chloro-3-methylphenol	500.000	ug/kg	C U	450.000	ug/kg	C U	420.000	ug/kg	C U
4-Chlorophenylphenyl ether	500.000	ug/kg	C U	450.000	ug/kg	C U	420.000	ug/kg	C U
4-Methylphenol	500.000	ug/kg	C U	450.000	ug/kg	C U	420.000	ug/kg	C U
4-Nitroaniline	1200.000	ug/kg	C U	1100.000	ug/kg	C U	1000.000	ug/kg	C U
4-Nitrophenol	1200.000	ug/kg	C U	1100.000	ug/kg	C U	1000.000	ug/kg	C U
Acenaphthene	500.000	ug/kg	C U	450.000	ug/kg	C U	420.000	ug/kg	C U
Acenaphthylene	500.000	ug/kg	C U	450.000	ug/kg	C U	420.000	ug/kg	C U
Anthracene	500.000	ug/kg	C U	450.000	ug/kg	C U	420.000	ug/kg	C U
Benzo(a)anthracene	500.000	ug/kg	C U	58.000	ug/kg	C J	44.000	ug/kg	C J
Benzo(a)pyrene	500.000	ug/kg	C U	67.000	ug/kg	C J	420.000	ug/kg	C U
Benzo(b)fluoranthene	500.000	ug/kg	C U	74.000	ug/kg	C J	420.000	ug/kg	C U
Benzo(g,h,i)perylene	160.000	ug/kg	C J	51.000	ug/kg	C J	420.000	ug/kg	C U
Benzo(k)fluoranthene	500.000	ug/kg	C U	69.000	ug/kg	C J	52.000	ug/kg	C J
Benzoic acid	62.000	ug/kg	C J	63.000	ug/kg	C J	2000.000	ug/kg	C UJ
Benzyl alcohol	500.000	ug/kg	C U	450.000	ug/kg	C U	420.000	ug/kg	C U
Butyl benzyl phthalate	500.000	ug/kg	C U	450.000	ug/kg	C U	420.000	ug/kg	C U
Carbazole	500.000	ug/kg	C U	450.000	ug/kg	C U	420.000	ug/kg	C U
Chrysene	500.000	ug/kg	C U	83.000	ug/kg	C J	63.000	ug/kg	C J
Di-n-butyl phthalate	550.000	ug/kg	C U	450.000	ug/kg	C U	420.000	ug/kg	C U
Di-n-octyl phthalate	500.000	ug/kg	C U	450.000	ug/kg	C U	420.000	ug/kg	C U
Dibenzo(a,h)anthracene	500.000	ug/kg	C U	450.000	ug/kg	C U	420.000	ug/kg	C U
Dibenzofuran	500.000	ug/kg	C U	450.000	ug/kg	C U	420.000	ug/kg	C U
Diethyl phthalate	500.000	ug/kg	C U	450.000	ug/kg	C U	420.000	ug/kg	C U
Dimethyl phthalate	500.000	ug/kg	C U	450.000	ug/kg	C U	420.000	ug/kg	C U
Fluoranthene	53.000	ug/kg	C J	130.000	ug/kg	C J	120.000	ug/kg	C J
Fluorene	500.000	ug/kg	C U	450.000	ug/kg	C U	420.000	ug/kg	C U
Hexachlorobenzene	500.000	ug/kg	C U	450.000	ug/kg	C U	420.000	ug/kg	C U
Hexachlorobutadiene	500.000	ug/kg	C U	450.000	ug/kg	C U	420.000	ug/kg	C U
Hexachlorocyclopentadiene	500.000	ug/kg	C U	450.000	ug/kg	C U	420.000	ug/kg	C U
Hexachloroethane	500.000	ug/kg	C U	450.000	ug/kg	C U	420.000	ug/kg	C U
Indeno(1,2,3-cd)pyrene	500.000	ug/kg	C U	52.000	ug/kg	C J	420.000	ug/kg	C U
Isophorone	500.000	ug/kg	C U	450.000	ug/kg	C U	420.000	ug/kg	C U
N-Nitroso-di-n-propylamine	500.000	ug/kg	C U	450.000	ug/kg	C U	420.000	ug/kg	C U
N-Nitrosodimethylamine	500.000	ug/kg	C U	450.000	ug/kg	C U	420.000	ug/kg	C U
N-Nitrosodiphenylamine	500.000	ug/kg	C U	450.000	ug/kg	C U	420.000	ug/kg	C U
Naphthalene	500.000	ug/kg	C U	450.000	ug/kg	C U	420.000	ug/kg	C U
Nitrobenzene	500.000	ug/kg	C U	450.000	ug/kg	C U	420.000	ug/kg	C U
Pentachlorophenol	1200.000	ug/kg	C U	1100.000	ug/kg	C U	1000.000	ug/kg	C U

05774

TABLE F-3A
(Continued)

PHASE II - CHEMICAL PARAMETERS

BORING NUMBER	1969			1970			1971		
SAMPLE NUMBER	110338			110372			110324		
	0-0.5			0-0.5			0-0.5		
SAMPLING DATE	03/22/93			03/22/92			03/22/93		
CHEMICAL PARAMETERS	RESULTS	UNITS	L VQ	RESULTS	UNITS	L VQ	RESULTS	UNITS	L VQ
Semivolatile Organics									
Phenanthrene	500.000	ug/kg	C U	48.000	ug/kg	C J	67.000	ug/kg	C J
Phenol	500.000	ug/kg	C U	450.000	ug/kg	C U	420.000	ug/kg	C U
Pyrene	500.000	ug/kg	C U	100.000	ug/kg	C J	93.000	ug/kg	C J
Tributyl phosphate	500.000	ug/kg	C U	450.000	ug/kg	C U	420.000	ug/kg	C U
bis(2-Chloroethoxy)methane	500.000	ug/kg	C U	450.000	ug/kg	C U	420.000	ug/kg	C U
bis(2-Chloroethyl)ether	500.000	ug/kg	C U	450.000	ug/kg	C U	420.000	ug/kg	C U
bis(2-Chloroisopropyl) ether	500.000	ug/kg	C U	450.000	ug/kg	C U	420.000	ug/kg	C U
bis(2-Ethylhexyl) phthalate	89.000	ug/kg	C J	91.000	ug/kg	C J	80.000	ug/kg	C J
p-Chloroaniline	500.000	ug/kg	C U	450.000	ug/kg	C U	420.000	ug/kg	C U
Pesticide Organics/PCBs									
4,4'-DDD	5.000	ug/kg	C U	4.500	ug/kg	C U	4.100	ug/kg	C U
4,4'-DDE	5.000	ug/kg	C U	4.500	ug/kg	C U	4.100	ug/kg	C U
4,4'-DDT	5.000	ug/kg	C U	4.500	ug/kg	C U	4.100	ug/kg	C U
Aldrin	2.600	ug/kg	C U	2.300	ug/kg	C U	2.100	ug/kg	C U
Aroclor-1016	50.000	ug/kg	C U	45.000	ug/kg	C U	41.000	ug/kg	C U
Aroclor-1221	100.000	ug/kg	C U	92.000	ug/kg	C U	84.000	ug/kg	C U
Aroclor-1232	50.000	ug/kg	C U	45.000	ug/kg	C U	41.000	ug/kg	C U
Aroclor-1242	50.000	ug/kg	C U	45.000	ug/kg	C U	41.000	ug/kg	C U
Aroclor-1248	50.000	ug/kg	C U	45.000	ug/kg	C U	41.000	ug/kg	C U
Aroclor-1254	50.000	ug/kg	C U	45.000	ug/kg	C U	41.000	ug/kg	C U
Aroclor-1260	50.000	ug/kg	C U	45.000	ug/kg	C U	41.000	ug/kg	C U
Dieldrin	5.000	ug/kg	C U	4.500	ug/kg	C U	4.100	ug/kg	C U
Endosulfan II	5.000	ug/kg	C U	4.500	ug/kg	C U	4.100	ug/kg	C U
Endosulfan sulfate	5.000	ug/kg	C U	4.500	ug/kg	C U	4.100	ug/kg	C U
Endosulfan-I	2.600	ug/kg	C U	2.300	ug/kg	C U	2.100	ug/kg	C U
Endrin	5.000	ug/kg	C U	4.500	ug/kg	C U	4.100	ug/kg	C U
Endrin aldehyde	5.000	ug/kg	C U	4.500	ug/kg	C U	4.100	ug/kg	C U
Endrin ketone	5.000	ug/kg	C U	4.500	ug/kg	C U	4.100	ug/kg	C U
Heptachlor	2.600	ug/kg	C U	2.300	ug/kg	C U	2.100	ug/kg	C U
Heptachlor epoxide	2.600	ug/kg	C U	2.300	ug/kg	C U	2.100	ug/kg	C U
Methoxychlor	26.000	ug/kg	C U	23.000	ug/kg	C U	21.000	ug/kg	C U
Toxaphene	260.000	ug/kg	C U	230.000	ug/kg	C U	210.000	ug/kg	C U
alpha-BHC	2.600	ug/kg	C U	2.300	ug/kg	C U	2.100	ug/kg	C U
alpha-Chlordane	2.600	ug/kg	C U	2.300	ug/kg	C U	2.100	ug/kg	C U
beta-BHC	2.600	ug/kg	C U	2.300	ug/kg	C U	2.100	ug/kg	C U
delta-BHC	2.600	ug/kg	C U	2.300	ug/kg	C U	2.100	ug/kg	C U
gamma-BHC (Lindane)	2.600	ug/kg	C U	2.300	ug/kg	C U	2.100	ug/kg	C U
gamma-Chlordane	2.600	ug/kg	C U	2.300	ug/kg	C U	2.100	ug/kg	C U

TABLE F-3A
(Continued)

PHASE II - CHEMICAL PARAMETERS

BORING NUMBER	1972			1975			1977		
SAMPLE NUMBER	110378			110385			110304		
	0-0.5			0-0.5			0-0.5		
SAMPLING DATE	03/19/93			03/22/93			03/19/93		
CHEMICAL PARAMETERS	RESULTS	UNITS	L VQ	RESULTS	UNITS	L VQ	RESULTS	UNITS	L VQ
Inorganics									
Aluminum	8670.000	mg/kg	C -	9710.000	mg/kg	D -	8230.000	mg/kg	C -
Antimony	1.200	mg/kg	C UJ	1.200	mg/kg	D J	1.200	mg/kg	C UJ
Arsenic	7.000	mg/kg	C -	7.000	mg/kg	D -	6.800	mg/kg	C -
Barium	63.600	mg/kg	C -	76.700	mg/kg	D -	74.600	mg/kg	C -
Beryllium	0.520	mg/kg	C -	0.610	mg/kg	D -	0.630	mg/kg	C -
Cadmium	1.200	mg/kg	C U	0.960	mg/kg	D U	1.200	mg/kg	C U
Calcium	64800.000	mg/kg	C -	68100.000	mg/kg	D -	82700.000	mg/kg	C -
Chromium	17.300	mg/kg	C -	11.600	mg/kg	D -	9.400	mg/kg	C -
Cobalt	6.900	mg/kg	C -	7.300	mg/kg	D -	5.900	mg/kg	C -
Copper	18.400	mg/kg	C -	15.100	mg/kg	D -	12.200	mg/kg	C -
Cyanide	0.210	mg/kg	C -	0.140	mg/kg	D -	0.120	mg/kg	C U
Iron	14800.000	mg/kg	C -	18500.000	mg/kg	D -	14700.000	mg/kg	C -
Lead	22.500	mg/kg	C -	19.200	mg/kg	D J	23.300	mg/kg	C -
Magnesium	21700.000	mg/kg	C -	19800.000	mg/kg	D J	29000.000	mg/kg	C -
Manganese	536.000	mg/kg	C -	576.000	mg/kg	D -	729.000	mg/kg	C -
Mercury	0.110	mg/kg	C UJ	0.120	mg/kg	D U	0.110	mg/kg	C UJ
Molybdenum	4.800	mg/kg	C -	5.300	mg/kg	D -	4.700	mg/kg	C U
Nickel	16.900	mg/kg	C -	17.800	mg/kg	D -	13.100	mg/kg	C -
Potassium	1420.000	mg/kg	C -	1160.000	mg/kg	D -	903.000	mg/kg	C -
Selenium	0.430	mg/kg	C U	0.720	mg/kg	D J	0.460	mg/kg	C U
Silicon	993.000	mg/kg	C J	406.000	mg/kg	D -	1080.000	mg/kg	C J
Silver	3.900	mg/kg	C J	5.200	mg/kg	D -	3.400	mg/kg	C J
Sodium	122.000	mg/kg	C -	103.000	mg/kg	D -	154.000	mg/kg	C -
Thallium	0.430	mg/kg	C U	0.490	mg/kg	D U	0.460	mg/kg	C U
Vanadium	20.800	mg/kg	C -	26.100	mg/kg	D -	17.800	mg/kg	C -
Zinc	47.700	mg/kg	C -	45.500	mg/kg	D -	45.800	mg/kg	C -
Volatile Organics									
1,1,1-Trichloroethane	12.000	ug/kg	C U	6.000	ug/kg	D U	12.000	ug/kg	C U
1,1,2,2-Tetrachloroethane	12.000	ug/kg	C U	6.000	ug/kg	D U	12.000	ug/kg	C U
1,1,2-Trichloroethane	12.000	ug/kg	C U	6.000	ug/kg	D U	12.000	ug/kg	C U
1,1-Dichloroethane	12.000	ug/kg	C U	6.000	ug/kg	D UJ	12.000	ug/kg	C U
1,1-Dichloroethene	12.000	ug/kg	C U	6.000	ug/kg	D U	12.000	ug/kg	C U
1,2-Dichloroethane	12.000	ug/kg	C U	6.000	ug/kg	D U	12.000	ug/kg	C U
1,2-Dichloroethene	12.000	ug/kg	C U	6.000	ug/kg	D U	12.000	ug/kg	C U
1,2-Dichloropropane	12.000	ug/kg	C U	6.000	ug/kg	D U	12.000	ug/kg	C U
2-Butanone	12.000	ug/kg	C U	12.000	ug/kg	D UJ	12.000	ug/kg	C U
2-Hexanone	12.000	ug/kg	C U	12.000	ug/kg	D U	12.000	ug/kg	C U
4-Methyl-2-pentanone	12.000	ug/kg	C U	12.000	ug/kg	D U	12.000	ug/kg	C U
Acetone	12.000	ug/kg	C UJ	19.000	ug/kg	D -	12.000	ug/kg	C UJ
Benzene	12.000	ug/kg	C U	6.000	ug/kg	D U	12.000	ug/kg	C U

TABLE F-3A
(Continued)

PHASE II - CHEMICAL PARAMETERS

BORING NUMBER	1972			1975			1977		
SAMPLE NUMBER	110378			110385			110304		
	0-0.5			0-0.5			0-0.5		
SAMPLING DATE	03/19/93			03/22/93			03/19/93		
CHEMICAL PARAMETERS	RESULTS	UNITS	L VQ	RESULTS	UNITS	L VQ	RESULTS	UNITS	L VQ
Volatile Organics									
Bromodichloromethane	12.000	ug/kg	C U	6.000	ug/kg	D U	12.000	ug/kg	C U
Bromoform	12.000	ug/kg	C U	6.000	ug/kg	D U	12.000	ug/kg	C U
Bromomethane	12.000	ug/kg	C U	12.000	ug/kg	D UJ	12.000	ug/kg	C U
Carbon Tetrachloride	12.000	ug/kg	C U	6.000	ug/kg	D U	12.000	ug/kg	C U
Carbon disulfide	12.000	ug/kg	C U	6.000	ug/kg	D U	12.000	ug/kg	C U
Chlorobenzene	12.000	ug/kg	C U	6.000	ug/kg	D U	12.000	ug/kg	C U
Chloroethane	12.000	ug/kg	C U	12.000	ug/kg	D UJ	12.000	ug/kg	C U
Chloroform	12.000	ug/kg	C U	6.000	ug/kg	D U	12.000	ug/kg	C U
Chloromethane	12.000	ug/kg	C R	12.000	ug/kg	D U	12.000	ug/kg	C R
Dibromochloromethane	12.000	ug/kg	C U	6.000	ug/kg	D U	12.000	ug/kg	C U
Ethylbenzene	12.000	ug/kg	C U	6.000	ug/kg	D U	12.000	ug/kg	C U
Methylene chloride	12.000	ug/kg	C UJ	3.000	ug/kg	D J	12.000	ug/kg	C UJ
Styrene	12.000	ug/kg	C U	6.000	ug/kg	D U	12.000	ug/kg	C U
Tetrachloroethene	12.000	ug/kg	C U	6.000	ug/kg	D U	12.000	ug/kg	C U
Toluene	12.000	ug/kg	C U	6.000	ug/kg	D U	12.000	ug/kg	C U
Trichloroethene	12.000	ug/kg	C U	6.000	ug/kg	D U	12.000	ug/kg	C U
Vinyl Acetate	12.000	ug/kg	C UJ	12.000	ug/kg	D U	12.000	ug/kg	C UJ
Vinyl chloride	12.000	ug/kg	C U	12.000	ug/kg	D U	12.000	ug/kg	C U
Xylenes, Total	12.000	ug/kg	C U	6.000	ug/kg	D U	12.000	ug/kg	C U
cis-1,3-Dichloropropene	12.000	ug/kg	C U	6.000	ug/kg	D U	12.000	ug/kg	C U
trans-1,3-Dichloropropene	12.000	ug/kg	C U	6.000	ug/kg	D U	12.000	ug/kg	C U
Semivolatile Organics									
1,2,4-Trichlorobenzene	4000.000	ug/kg	C U	410.000	ug/kg	D U	400.000	ug/kg	C U
1,2-Dichlorobenzene	4000.000	ug/kg	C U	410.000	ug/kg	D U	400.000	ug/kg	C U
1,2-Diphenylhydrazine	NA			410.000	ug/kg	D U	NA		
1,3-Dichlorobenzene	4000.000	ug/kg	C U	410.000	ug/kg	D U	400.000	ug/kg	C U
1,4-Dichlorobenzene	4000.000	ug/kg	C U	410.000	ug/kg	D U	400.000	ug/kg	C U
2,4,5-Trichlorophenol	9600.000	ug/kg	C U	1000.000	ug/kg	D U	980.000	ug/kg	C U
2,4,6-Trichlorophenol	4000.000	ug/kg	C U	410.000	ug/kg	D U	400.000	ug/kg	C U
2,4-Dichlorophenol	4000.000	ug/kg	C U	410.000	ug/kg	D U	400.000	ug/kg	C U
2,4-Dimethylphenol	4000.000	ug/kg	C U	410.000	ug/kg	D U	400.000	ug/kg	C U
2,4-Dinitrophenol	19000.000	ug/kg	C R	2000.000	ug/kg	D UJ	2000.000	ug/kg	C R
2,4-Dinitrotoluene	4000.000	ug/kg	C UJ	410.000	ug/kg	D U	400.000	ug/kg	C U
2,6-Dinitrotoluene	4000.000	ug/kg	C UJ	410.000	ug/kg	D U	400.000	ug/kg	C UJ
2-Chloronaphthalene	4000.000	ug/kg	C U	410.000	ug/kg	D U	400.000	ug/kg	C U
2-Chlorophenol	4000.000	ug/kg	C U	410.000	ug/kg	D U	400.000	ug/kg	C U
2-Methylnaphthalene	4000.000	ug/kg	C U	410.000	ug/kg	D U	400.000	ug/kg	C U
2-Methylphenol	4000.000	ug/kg	C U	410.000	ug/kg	D U	400.000	ug/kg	C U
2-Nitroaniline	9600.000	ug/kg	C U	1000.000	ug/kg	D U	980.000	ug/kg	C U
2-Nitrophenol	4000.000	ug/kg	C U	410.000	ug/kg	D U	400.000	ug/kg	C U

TABLE F-3A
(Continued)

PHASE II - CHEMICAL PARAMETERS

BORING NUMBER	1972					1975					1977				
SAMPLE NUMBER	110378					110385					110304				
	0-0.5					0-0.5					0-0.5				
SAMPLING DATE	03/19/93					03/22/93					03/19/93				
CHEMICAL PARAMETERS	RESULTS	UNITS	L	VQ		RESULTS	UNITS	L	VQ		RESULTS	UNITS	L	VQ	
Semivolatile Organics															
3,3'-Dichlorobenzidine	4000.000	ug/kg	C	U		410.000	ug/kg	D	U		400.000	ug/kg	C	U	
3-Nitroaniline	9600.000	ug/kg	C	U		1000.000	ug/kg	D	U		980.000	ug/kg	C	U	
4,6-Dinitro-2-methylphenol	9600.000	ug/kg	C	R		1000.000	ug/kg	D	UJ		980.000	ug/kg	C	R	
4-Bromophenyl phenyl ether	4000.000	ug/kg	C	U		410.000	ug/kg	D	U		400.000	ug/kg	C	U	
4-Chloro-3-methylphenol	4000.000	ug/kg	C	U		410.000	ug/kg	D	U		400.000	ug/kg	C	U	
4-Chlorophenylphenyl ether	4000.000	ug/kg	C	U		410.000	ug/kg	D	U		400.000	ug/kg	C	U	
4-Methylphenol	4000.000	ug/kg	C	U		410.000	ug/kg	D	U		400.000	ug/kg	C	U	
4-Nitroaniline	9600.000	ug/kg	C	U		1000.000	ug/kg	D	U		980.000	ug/kg	C	U	
4-Nitrophenol	9600.000	ug/kg	C	R		1000.000	ug/kg	D	U		980.000	ug/kg	C	U	
Acenaphthene	4000.000	ug/kg	C	U		410.000	ug/kg	D	U		400.000	ug/kg	C	R	
Acenaphthylene	1200.000	ug/kg	C	J		410.000	ug/kg	D	U		130.000	ug/kg	C	J	
Anthracene	730.000	ug/kg	C	J		410.000	ug/kg	D	U		130.000	ug/kg	C	J	
Benzo(a)anthracene	5500.000	ug/kg	C	-		410.000	ug/kg	D	U		630.000	ug/kg	C	-	
Benzo(a)pyrene	9400.000	ug/kg	C	-		410.000	ug/kg	D	U		800.000	ug/kg	C	-	
Benzo(b)fluoranthene	6200.000	ug/kg	C	-		410.000	ug/kg	D	U		670.000	ug/kg	C	-	
Benzo(g,h,i)perylene	6200.000	ug/kg	C	-		410.000	ug/kg	D	U		650.000	ug/kg	C	-	
Benzo(k)fluoranthene	7300.000	ug/kg	C	-		410.000	ug/kg	D	U		710.000	ug/kg	C	-	
Benzoic acid	19000.000	ug/kg	C	R		2000.000	ug/kg	D	UJ		2000.000	ug/kg	C	R	
Benzyl alcohol	4000.000	ug/kg	C	R		410.000	ug/kg	D	U		400.000	ug/kg	C	R	
Butyl benzyl phthalate	4000.000	ug/kg	C	U		410.000	ug/kg	D	U		400.000	ug/kg	C	U	
Carbazole	4000.000	ug/kg	C	U		410.000	ug/kg	D	U		67.000	ug/kg	C	J	
Chrysene	6000.000	ug/kg	C	-		410.000	ug/kg	D	U		750.000	ug/kg	C	-	
Di-n-butyl phthalate	4000.000	ug/kg	C	U		410.000	ug/kg	D	U		400.000	ug/kg	C	U	
Di-n-octyl phthalate	4000.000	ug/kg	C	UJ		410.000	ug/kg	D	U		400.000	ug/kg	C	UJ	
Dibenzo(a,h)anthracene	1900.000	ug/kg	C	J		410.000	ug/kg	D	U		230.000	ug/kg	C	J	
Dibenzofuran	4000.000	ug/kg	C	U		410.000	ug/kg	D	U		400.000	ug/kg	C	UJ	
Diethyl phthalate	4000.000	ug/kg	C	U		410.000	ug/kg	D	U		400.000	ug/kg	C	U	
Dimethyl phthalate	4000.000	ug/kg	C	U		410.000	ug/kg	D	U		400.000	ug/kg	C	U	
Fluoranthene	9200.000	ug/kg	C	-		48.000	ug/kg	D	J		1000.000	ug/kg	C	-	
Fluorene	4000.000	ug/kg	C	U		410.000	ug/kg	D	U		400.000	ug/kg	C	U	
Hexachlorobenzene	4000.000	ug/kg	C	U		410.000	ug/kg	D	U		400.000	ug/kg	C	U	
Hexachlorobutadiene	4000.000	ug/kg	C	U		410.000	ug/kg	D	U		400.000	ug/kg	C	U	
Hexachlorocyclopentadiene	4000.000	ug/kg	C	UJ		410.000	ug/kg	D	U		400.000	ug/kg	C	UJ	
Hexachloroethane	4000.000	ug/kg	C	U		410.000	ug/kg	D	U		400.000	ug/kg	C	U	
Indeno(1,2,3-cd)pyrene	6000.000	ug/kg	C	-		410.000	ug/kg	D	U		620.000	ug/kg	C	-	
Isophorone	4000.000	ug/kg	C	U		410.000	ug/kg	D	U		400.000	ug/kg	C	U	
N-Nitroso-di-n-propylamine	4000.000	ug/kg	C	U		410.000	ug/kg	D	U		400.000	ug/kg	C	U	
N-Nitrosodimethylamine	NA					410.000	ug/kg	D	U		NA				
N-Nitrosodiphenylamine	4000.000	ug/kg	C	U		410.000	ug/kg	D	U		400.000	ug/kg	C	U	
Naphthalene	4000.000	ug/kg	C	U		410.000	ug/kg	D	U		400.000	ug/kg	C	U	
Nitrobenzene	4000.000	ug/kg	C	U		410.000	ug/kg	D	U		400.000	ug/kg	C	U	
Pentachlorophenol	9600.000	ug/kg	C	UJ		1000.000	ug/kg	D	U		980.000	ug/kg	C	UJ	

TABLE F-3A
(Continued)

PHASE II - CHEMICAL PARAMETERS

BORING NUMBER	1972				1975				1977			
SAMPLE NUMBER	110378				110385				110304			
	0-0.5				0-0.5				0-0.5			
SAMPLING DATE	03/19/93				03/22/93				03/19/93			
CHEMICAL PARAMETERS	RESULTS	UNITS	L	VQ	RESULTS	UNITS	L	VQ	RESULTS	UNITS	L	VQ
Semivolatile Organics												
Phenanthrene	1200.000	ug/kg	C	J	410.000	ug/kg	D	U	380.000	ug/kg	C	J
Phenol	4000.000	ug/kg	C	U	410.000	ug/kg	D	U	400.000	ug/kg	C	U
Pyrene	8200.000	ug/kg	C	-	410.000	ug/kg	D	U	930.000	ug/kg	C	-
Tributyl phosphate	NA				410.000	ug/kg	D	U	NA			
bis(2-Chloroethoxy)methane	4000.000	ug/kg	C	U	410.000	ug/kg	D	U	400.000	ug/kg	C	U
bis(2-Chloroethyl)ether	4000.000	ug/kg	C	U	410.000	ug/kg	D	U	400.000	ug/kg	C	U
bis(2-Chloroisopropyl) ether	4000.000	ug/kg	C	UJ	410.000	ug/kg	D	U	400.000	ug/kg	C	UJ
bis(2-Ethylhexyl) phthalate	4000.000	ug/kg	C	U	64.000	ug/kg	D	J	66.000	ug/kg	C	J
p-Chloroaniline	4000.000	ug/kg	C	U	410.000	ug/kg	D	U	400.000	ug/kg	C	U
Pesticide Organics/PCBs												
4,4'-DDD	4.100	ug/kg	C	U	4.100	ug/kg	D	U	4.000	ug/kg	C	U
4,4'-DDE	4.100	ug/kg	C	U	4.100	ug/kg	D	U	4.000	ug/kg	C	U
4,4'-DDT	4.100	ug/kg	C	U	4.100	ug/kg	D	U	4.000	ug/kg	C	U
Aldrin	2.100	ug/kg	C	U	2.100	ug/kg	D	U	2.100	ug/kg	C	U
Aroclor-1016	41.000	ug/kg	C	U	41.000	ug/kg	D	U	40.000	ug/kg	C	U
Aroclor-1221	82.000	ug/kg	C	U	84.000	ug/kg	D	U	82.000	ug/kg	C	U
Aroclor-1232	41.000	ug/kg	C	U	41.000	ug/kg	D	U	40.000	ug/kg	C	U
Aroclor-1242	41.000	ug/kg	C	U	41.000	ug/kg	D	U	40.000	ug/kg	C	U
Aroclor-1248	41.000	ug/kg	C	U	41.000	ug/kg	D	U	40.000	ug/kg	C	U
Aroclor-1254	41.000	ug/kg	C	U	41.000	ug/kg	D	U	89.000	ug/kg	C	-
Aroclor-1260	41.000	ug/kg	C	U	41.000	ug/kg	D	U	40.000	ug/kg	C	U
Dieldrin	9.700	ug/kg	C	-	4.100	ug/kg	D	U	4.000	ug/kg	C	U
Endosulfan II	4.100	ug/kg	C	U	4.100	ug/kg	D	U	4.000	ug/kg	C	U
Endosulfan sulfate	4.100	ug/kg	C	U	4.100	ug/kg	D	U	4.000	ug/kg	C	U
Endosulfan-I	2.100	ug/kg	C	U	2.100	ug/kg	D	U	2.100	ug/kg	C	U
Endrin	4.100	ug/kg	C	U	4.100	ug/kg	D	U	4.000	ug/kg	C	U
Endrin aldehyde	4.100	ug/kg	C	U	4.100	ug/kg	D	U	4.000	ug/kg	C	U
Endrin ketone	5.500	ug/kg	C	R	4.100	ug/kg	D	U	4.000	ug/kg	C	U
Heptachlor	2.100	ug/kg	C	U	2.100	ug/kg	D	U	2.100	ug/kg	C	U
Heptachlor epoxide	2.100	ug/kg	C	U	2.100	ug/kg	D	U	2.100	ug/kg	C	U
Methoxychlor	21.000	ug/kg	C	U	21.000	ug/kg	D	U	21.000	ug/kg	C	U
Toxaphene	210.000	ug/kg	C	U	210.000	ug/kg	D	U	210.000	ug/kg	C	U
alpha-BHC	2.100	ug/kg	C	U	2.100	ug/kg	D	U	2.100	ug/kg	C	U
alpha-Chlordane	2.100	ug/kg	C	U	2.100	ug/kg	D	U	2.100	ug/kg	C	U
beta-BHC	2.100	ug/kg	C	U	2.100	ug/kg	D	U	2.100	ug/kg	C	U
delta-BHC	2.100	ug/kg	C	U	2.100	ug/kg	D	U	2.100	ug/kg	C	U
gamma-BHC (Lindane)	2.100	ug/kg	C	U	2.100	ug/kg	D	U	2.100	ug/kg	C	U
gamma-Chlordane	2.100	ug/kg	C	U	2.100	ug/kg	D	U	2.100	ug/kg	C	U

TABLE F-3A
(Continued)

PHASE II - CHEMICAL PARAMETERS

BORING NUMBER	1978					SF-SS-18					SF-SS-20				
SAMPLE NUMBER	110335					110287					110290				
	0-0.5					0-0.5					0-0.5				
SAMPLING DATE	03/22/93					03/18/93					03/19/93				
CHEMICAL PARAMETERS	RESULTS	UNITS	L	VQ		RESULTS	UNITS	L	VQ		RESULTS	UNITS	L	VQ	
Inorganics															
Aluminum	11100.000	mg/kg	C	-		7470.000	mg/kg	C	-		7250.000	mg/kg	D	-	
Antimony	1.000	mg/kg	C	R		1.100	mg/kg	C	UJ		1.200	mg/kg	D	UJ	
Arsenic	6.100	mg/kg	C	-		5.200	mg/kg	C	J		6.500	mg/kg	D	-	
Barium	84.900	mg/kg	C	-		61.900	mg/kg	C	-		60.900	mg/kg	D	-	
Beryllium	0.860	mg/kg	C	-		0.920	mg/kg	C	U		0.600	mg/kg	D	-	
Cadmium	1.000	mg/kg	C	U		2.300	mg/kg	C	U		1.200	mg/kg	D	U	
Calcium	34600.000	mg/kg	C	-		140000.000	mg/kg	C	-		81600.000	mg/kg	D	-	
Chromium	13.800	mg/kg	C	-		8.100	mg/kg	C	U		9.600	mg/kg	D	-	
Cobalt	6.500	mg/kg	C	-		7.100	mg/kg	C	-		4.500	mg/kg	D	-	
Copper	16.700	mg/kg	C	-		9.300	mg/kg	C	-		14.200	mg/kg	D	-	
Cyanide	0.130	mg/kg	C	U		0.120	mg/kg	C	-		0.230	mg/kg	D	-	
Iron	20100.000	mg/kg	C	-		12800.000	mg/kg	C	-		14000.000	mg/kg	D	-	
Lead	19.400	mg/kg	C	J		20.000	mg/kg	C	-		18.800	mg/kg	D	-	
Magnesium	14100.000	mg/kg	C	J		18200.000	mg/kg	C	-		20600.000	mg/kg	D	-	
Manganese	546.000	mg/kg	C	-		713.000	mg/kg	C	-		398.000	mg/kg	D	-	
Mercury	0.120	mg/kg	C	U		0.100	mg/kg	C	UJ		0.120	mg/kg	D	UJ	
Molybdenum	5.600	mg/kg	C	-		9.200	mg/kg	C	U		4.800	mg/kg	D	U	
Nickel	17.500	mg/kg	C	-		11.900	mg/kg	C	-		15.000	mg/kg	D	-	
Potassium	1560.000	mg/kg	C	-		1040.000	mg/kg	C	-		1250.000	mg/kg	D	-	
Selenium	0.450	mg/kg	C	UJ		0.460	mg/kg	C	U		0.470	mg/kg	D	U	
Silicon	537.000	mg/kg	C	J		916.000	mg/kg	C	J		753.000	mg/kg	D	J	
Silver	6.000	mg/kg	C	-		4.600	mg/kg	C	U		4.000	mg/kg	D	J	
Sodium	83.300	mg/kg	C	-		131.000	mg/kg	C	-		107.000	mg/kg	D	-	
Thallium	0.450	mg/kg	C	U		0.460	mg/kg	C	U		0.470	mg/kg	D	U	
Vanadium	29.300	mg/kg	C	-		18.600	mg/kg	C	-		19.400	mg/kg	D	-	
Zinc	52.700	mg/kg	C	-		33.300	mg/kg	C	-		47.300	mg/kg	D	-	
Volatile Organics															
1,1,1-Trichloroethane	6.000	ug/kg	C	U		11.000	ug/kg	C	U		12.000	ug/kg	D	U	
1,1,2,2-Tetrachloroethane	6.000	ug/kg	C	U		11.000	ug/kg	C	U		12.000	ug/kg	D	U	
1,1,2-Trichloroethane	6.000	ug/kg	C	U		11.000	ug/kg	C	U		12.000	ug/kg	D	U	
1,1-Dichloroethane	6.000	ug/kg	C	UJ		11.000	ug/kg	C	U		12.000	ug/kg	D	U	
1,1-Dichloroethene	6.000	ug/kg	C	U		11.000	ug/kg	C	U		12.000	ug/kg	D	U	
1,2-Dichloroethane	6.000	ug/kg	C	U		11.000	ug/kg	C	U		12.000	ug/kg	D	U	
1,2-Dichloroethene	6.000	ug/kg	C	U		11.000	ug/kg	C	U		12.000	ug/kg	D	U	
1,2-Dichloropropane	6.000	ug/kg	C	U		11.000	ug/kg	C	U		12.000	ug/kg	D	U	
2-Butanone	13.000	ug/kg	C	UJ		11.000	ug/kg	C	U		12.000	ug/kg	D	U	
2-Hexanone	13.000	ug/kg	C	U		11.000	ug/kg	C	U		12.000	ug/kg	D	U	
4-Methyl-2-pentanone	13.000	ug/kg	C	U		11.000	ug/kg	C	U		12.000	ug/kg	D	U	
Acetone	13.000	ug/kg	C	U		11.000	ug/kg	C	UJ		9.000	ug/kg	D	J	
Benzene	6.000	ug/kg	C	U		11.000	ug/kg	C	U		12.000	ug/kg	D	U	

TABLE F-3A
(Continued)

PHASE II - CHEMICAL PARAMETERS

BORING NUMBER	1978				SF-SS-18				SF-SS-20			
SAMPLE NUMBER	110335				110287				110290			
	0-0.5				0-0.5				0-0.5			
SAMPLING DATE	03/22/93				03/18/93				03/19/93			
CHEMICAL PARAMETERS	RESULTS	UNITS	L	VQ	RESULTS	UNITS	L	VQ	RESULTS	UNITS	L	VQ
Volatile Organics												
Bromodichloromethane	6.000	ug/kg	C	U	11.000	ug/kg	C	U	12.000	ug/kg	D	U
Bromoform	6.000	ug/kg	C	U	11.000	ug/kg	C	U	12.000	ug/kg	D	U
Bromomethane	13.000	ug/kg	C	UJ	11.000	ug/kg	C	UJ	12.000	ug/kg	D	UJ
Carbon Tetrachloride	6.000	ug/kg	C	U	11.000	ug/kg	C	U	12.000	ug/kg	D	U
Carbon disulfide	6.000	ug/kg	C	U	11.000	ug/kg	C	U	12.000	ug/kg	D	U
Chlorobenzene	6.000	ug/kg	C	U	11.000	ug/kg	C	U	12.000	ug/kg	D	U
Chloroethane	13.000	ug/kg	C	UJ	11.000	ug/kg	C	UJ	12.000	ug/kg	D	U
Chloroform	6.000	ug/kg	C	U	11.000	ug/kg	C	U	12.000	ug/kg	D	U
Chloromethane	13.000	ug/kg	C	U	11.000	ug/kg	C	U	12.000	ug/kg	D	U
Dibromochloromethane	6.000	ug/kg	C	U	11.000	ug/kg	C	U	12.000	ug/kg	D	U
Ethylbenzene	6.000	ug/kg	C	U	11.000	ug/kg	C	U	12.000	ug/kg	D	U
Methylene chloride	13.000	ug/kg	C	UJ	10.000	ug/kg	C	U	12.000	ug/kg	D	UJ
Styrene	6.000	ug/kg	C	U	11.000	ug/kg	C	U	12.000	ug/kg	D	U
Tetrachloroethene	6.000	ug/kg	C	U	11.000	ug/kg	C	U	12.000	ug/kg	D	U
Toluene	6.000	ug/kg	C	U	11.000	ug/kg	C	U	12.000	ug/kg	D	U
Trichloroethene	6.000	ug/kg	C	U	11.000	ug/kg	C	U	12.000	ug/kg	D	U
Vinyl Acetate	13.000	ug/kg	C	U	11.000	ug/kg	C	U	12.000	ug/kg	D	U
Vinyl chloride	13.000	ug/kg	C	U	11.000	ug/kg	C	UJ	12.000	ug/kg	D	U
Xylenes, Total	6.000	ug/kg	C	U	11.000	ug/kg	C	U	12.000	ug/kg	D	U
cis-1,3-Dichloropropene	6.000	ug/kg	C	U	11.000	ug/kg	C	U	12.000	ug/kg	D	U
trans-1,3-Dichloropropene	6.000	ug/kg	C	U	11.000	ug/kg	C	U	12.000	ug/kg	D	U
Semivolatile Organics												
1,2,4-Trichlorobenzene	440.000	ug/kg	C	U	390.000	ug/kg	C	U	420.000	ug/kg	D	U
1,2-Dichlorobenzene	440.000	ug/kg	C	U	390.000	ug/kg	C	U	420.000	ug/kg	D	U
1,2-Diphenylhydrazine	440.000	ug/kg	C	U	390.000	ug/kg	C	UJ	420.000	ug/kg	D	UJ
1,3-Dichlorobenzene	440.000	ug/kg	C	U	390.000	ug/kg	C	U	420.000	ug/kg	D	U
1,4-Dichlorobenzene	440.000	ug/kg	C	U	390.000	ug/kg	C	U	420.000	ug/kg	D	U
2,4,5-Trichlorophenol	1100.000	ug/kg	C	U	950.000	ug/kg	C	U	1000.000	ug/kg	D	U
2,4,6-Trichlorophenol	440.000	ug/kg	C	U	390.000	ug/kg	C	U	420.000	ug/kg	D	U
2,4-Dichlorophenol	440.000	ug/kg	C	U	390.000	ug/kg	C	U	420.000	ug/kg	D	U
2,4-Dimethylphenol	440.000	ug/kg	C	U	390.000	ug/kg	C	U	420.000	ug/kg	D	U
2,4-Dinitrophenol	2100.000	ug/kg	C	UJ	1900.000	ug/kg	C	R	2000.000	ug/kg	D	R
2,4-Dinitrotoluene	440.000	ug/kg	C	U	390.000	ug/kg	C	UJ	420.000	ug/kg	D	UJ
2,6-Dinitrotoluene	440.000	ug/kg	C	U	390.000	ug/kg	C	UJ	420.000	ug/kg	D	UJ
2-Chloronaphthalene	440.000	ug/kg	C	U	390.000	ug/kg	C	U	420.000	ug/kg	D	U
2-Chlorophenol	440.000	ug/kg	C	U	390.000	ug/kg	C	U	420.000	ug/kg	D	U
2-Methylnaphthalene	440.000	ug/kg	C	U	390.000	ug/kg	C	U	420.000	ug/kg	D	U
2-Methylphenol	440.000	ug/kg	C	U	390.000	ug/kg	C	U	420.000	ug/kg	D	U
2-Nitroaniline	1100.000	ug/kg	C	U	950.000	ug/kg	C	U	1000.000	ug/kg	D	U
2-Nitrophenol	440.000	ug/kg	C	U	390.000	ug/kg	C	U	420.000	ug/kg	D	U

TABLE F-3A
(Continued)

PHASE II - CHEMICAL PARAMETERS

BORING NUMBER	1978				SF-SS-18				SF-SS-20			
SAMPLE NUMBER	110335				110287				110290			
	0-0.5				0-0.5				0-0.5			
SAMPLING DATE	03/22/93				03/18/93				03/19/93			
CHEMICAL PARAMETERS	RESULTS	UNITS	L	VQ	RESULTS	UNITS	L	VQ	RESULTS	UNITS	L	VQ
Semivolatile Organics												
3,3'-Dichlorobenzidine	440.000	ug/kg	C	U	390.000	ug/kg	C	U	420.000	ug/kg	D	U
3-Nitroaniline	1100.000	ug/kg	C	U	950.000	ug/kg	C	U	1000.000	ug/kg	D	U
4,6-Dinitro-2-methylphenol	1100.000	ug/kg	C	UJ	950.000	ug/kg	C	R	1000.000	ug/kg	D	R
4-Bromophenyl phenyl ether	440.000	ug/kg	C	U	390.000	ug/kg	C	U	420.000	ug/kg	D	U
4-Chloro-3-methylphenol	440.000	ug/kg	C	U	390.000	ug/kg	C	U	420.000	ug/kg	D	U
4-Chlorophenylphenyl ether	440.000	ug/kg	C	U	390.000	ug/kg	C	U	420.000	ug/kg	D	U
4-Methylphenol	440.000	ug/kg	C	U	390.000	ug/kg	C	U	420.000	ug/kg	D	U
4-Nitroaniline	1100.000	ug/kg	C	U	950.000	ug/kg	C	U	1000.000	ug/kg	D	U
4-Nitrophenol	1100.000	ug/kg	C	U	950.000	ug/kg	C	U	1000.000	ug/kg	D	U
Acenaphthene	440.000	ug/kg	C	U	390.000	ug/kg	C	U	420.000	ug/kg	D	U
Acenaphthylene	440.000	ug/kg	C	U	120.000	ug/kg	C	J	420.000	ug/kg	D	U
Anthracene	440.000	ug/kg	C	U	110.000	ug/kg	C	J	420.000	ug/kg	D	U
Benzo(a)anthracene	440.000	ug/kg	C	U	530.000	ug/kg	C	-	46.000	ug/kg	D	J
Benzo(a)pyrene	440.000	ug/kg	C	U	750.000	ug/kg	C	-	79.000	ug/kg	D	J
Benzo(b)fluoranthene	440.000	ug/kg	C	U	700.000	ug/kg	C	-	65.000	ug/kg	D	J
Benzo(g,h,i)perylene	440.000	ug/kg	C	U	560.000	ug/kg	C	-	79.000	ug/kg	D	J
Benzo(k)fluoranthene	440.000	ug/kg	C	U	670.000	ug/kg	C	-	57.000	ug/kg	D	J
Benzoic acid	2100.000	ug/kg	C	UJ	1900.000	ug/kg	C	UJ	2000.000	ug/kg	D	U
Benzyl alcohol	440.000	ug/kg	C	U	390.000	ug/kg	C	R	420.000	ug/kg	D	R
Butyl benzyl phthalate	440.000	ug/kg	C	U	390.000	ug/kg	C	U	420.000	ug/kg	D	U
Carbazole	440.000	ug/kg	C	U	48.000	ug/kg	C	J	420.000	ug/kg	D	U
Chrysene	440.000	ug/kg	C	U	670.000	ug/kg	C	-	65.000	ug/kg	D	J
Di-n-butyl phthalate	440.000	ug/kg	C	U	330.000	ug/kg	C	U	420.000	ug/kg	D	U
Di-n-octyl phthalate	440.000	ug/kg	C	U	390.000	ug/kg	C	U	420.000	ug/kg	D	U
Dibenzo(a,h)anthracene	440.000	ug/kg	C	U	180.000	ug/kg	C	J	420.000	ug/kg	D	U
Dibenzofuran	440.000	ug/kg	C	U	390.000	ug/kg	C	U	420.000	ug/kg	D	U
Diethyl phthalate	440.000	ug/kg	C	U	390.000	ug/kg	C	U	420.000	ug/kg	D	U
Dimethyl phthalate	440.000	ug/kg	C	U	390.000	ug/kg	C	U	420.000	ug/kg	D	U
Fluoranthene	440.000	ug/kg	C	U	1100.000	ug/kg	C	-	68.000	ug/kg	D	J
Fluorene	440.000	ug/kg	C	U	390.000	ug/kg	C	U	420.000	ug/kg	D	U
Hexachlorobenzene	440.000	ug/kg	C	U	390.000	ug/kg	C	U	420.000	ug/kg	D	U
Hexachlorobutadiene	440.000	ug/kg	C	U	390.000	ug/kg	C	U	420.000	ug/kg	D	U
Hexachlorocyclopentadiene	440.000	ug/kg	C	U	390.000	ug/kg	C	U	420.000	ug/kg	D	U
Hexachloroethane	440.000	ug/kg	C	U	390.000	ug/kg	C	U	420.000	ug/kg	D	U
Indeno(1,2,3-cd)pyrene	440.000	ug/kg	C	U	520.000	ug/kg	C	-	45.000	ug/kg	D	J
Isophorone	440.000	ug/kg	C	U	390.000	ug/kg	C	U	420.000	ug/kg	D	U
N-Nitroso-di-n-propylamine	440.000	ug/kg	C	U	390.000	ug/kg	C	U	420.000	ug/kg	D	U
N-Nitrosodimethylamine	440.000	ug/kg	C	U	390.000	ug/kg	C	U	420.000	ug/kg	D	U
N-Nitrosodiphenylamine	440.000	ug/kg	C	U	390.000	ug/kg	C	U	420.000	ug/kg	D	U
Naphthalene	440.000	ug/kg	C	U	390.000	ug/kg	C	U	420.000	ug/kg	D	U
Nitrobenzene	440.000	ug/kg	C	U	390.000	ug/kg	C	U	420.000	ug/kg	D	U
Pentachlorophenol	1100.000	ug/kg	C	U	950.000	ug/kg	C	U	1000.000	ug/kg	D	U

0585

5174

TABLE F-3A
(Continued)

PHASE II - CHEMICAL PARAMETERS

BORING NUMBER	1978				SF-SS-18				SF-SS-20			
SAMPLE NUMBER	110335				110287				110290			
	0-0.5				0-0.5				0-0.5			
SAMPLING DATE	03/22/93				03/18/93				03/19/93			
CHEMICAL PARAMETERS	RESULTS	UNITS	L	VQ	RESULTS	UNITS	L	VQ	RESULTS	UNITS	L	VQ
Semivolatile Organics												
Phenanthrene	440.000	ug/kg	C	U	400.000	ug/kg	C	-	420.000	ug/kg	D	U
Phenol	440.000	ug/kg	C	U	390.000	ug/kg	C	U	420.000	ug/kg	D	U
Pyrene	440.000	ug/kg	C	U	850.000	ug/kg	C	-	62.000	ug/kg	D	J
Tributyl phosphate	440.000	ug/kg	C	U	390.000	ug/kg	C	U	420.000	ug/kg	D	U
bis(2-Chloroethoxy)methane	440.000	ug/kg	C	U	390.000	ug/kg	C	U	420.000	ug/kg	D	U
bis(2-Chloroethyl)ether	440.000	ug/kg	C	U	390.000	ug/kg	C	U	420.000	ug/kg	D	U
bis(2-Chloroisopropyl) ether	440.000	ug/kg	C	U	390.000	ug/kg	C	U	420.000	ug/kg	D	U
bis(2-Ethylhexyl) phthalate	82.000	ug/kg	C	J	72.000	ug/kg	C	J	71.000	ug/kg	D	J
p-Chloroaniline	440.000	ug/kg	C	U	390.000	ug/kg	C	U	420.000	ug/kg	D	U
Pesticide Organics/PCBs												
4,4'-DDD	4.400	ug/kg	C	U	3.900	ug/kg	C	U	4.200	ug/kg	D	U
4,4'-DDE	4.400	ug/kg	C	U	3.900	ug/kg	C	U	4.200	ug/kg	D	U
4,4'-DDT	4.400	ug/kg	C	U	3.900	ug/kg	C	U	4.200	ug/kg	D	U
Aldrin	2.300	ug/kg	C	U	2.000	ug/kg	C	U	2.200	ug/kg	D	U
Aroclor-1016	44.000	ug/kg	C	U	39.000	ug/kg	C	U	42.000	ug/kg	D	U
Aroclor-1221	90.000	ug/kg	C	U	79.000	ug/kg	C	U	85.000	ug/kg	D	U
Aroclor-1232	44.000	ug/kg	C	U	39.000	ug/kg	C	U	42.000	ug/kg	D	U
Aroclor-1242	44.000	ug/kg	C	U	39.000	ug/kg	C	U	42.000	ug/kg	D	U
Aroclor-1248	44.000	ug/kg	C	U	39.000	ug/kg	C	U	42.000	ug/kg	D	U
Aroclor-1254	44.000	ug/kg	C	U	39.000	ug/kg	C	U	42.000	ug/kg	D	U
Aroclor-1260	44.000	ug/kg	C	U	38.000	ug/kg	C	J	42.000	ug/kg	D	U
Dieldrin	4.400	ug/kg	C	U	3.900	ug/kg	C	U	4.200	ug/kg	D	U
Endosulfan II	4.400	ug/kg	C	U	3.900	ug/kg	C	U	4.200	ug/kg	D	U
Endosulfan sulfate	4.400	ug/kg	C	U	3.900	ug/kg	C	U	4.200	ug/kg	D	U
Endosulfan-I	2.300	ug/kg	C	U	2.000	ug/kg	C	U	2.200	ug/kg	D	U
Endrin	4.400	ug/kg	C	U	3.900	ug/kg	C	U	4.200	ug/kg	D	U
Endrin aldehyde	4.400	ug/kg	C	U	3.900	ug/kg	C	U	4.200	ug/kg	D	U
Endrin ketone	4.400	ug/kg	C	U	3.900	ug/kg	C	U	4.200	ug/kg	D	U
Heptachlor	2.300	ug/kg	C	U	2.000	ug/kg	C	U	2.200	ug/kg	D	U
Heptachlor epoxide	2.300	ug/kg	C	U	2.000	ug/kg	C	U	2.200	ug/kg	D	U
Methoxychlor	23.000	ug/kg	C	U	20.000	ug/kg	C	U	22.000	ug/kg	D	U
Toxaphene	230.000	ug/kg	C	U	200.000	ug/kg	C	U	220.000	ug/kg	D	U
alpha-BHC	2.300	ug/kg	C	U	2.000	ug/kg	C	U	2.200	ug/kg	D	U
alpha-Chlordane	2.300	ug/kg	C	U	2.000	ug/kg	C	U	2.200	ug/kg	D	U
beta-BHC	2.300	ug/kg	C	U	2.000	ug/kg	C	U	2.200	ug/kg	D	U
delta-BHC	2.300	ug/kg	C	U	2.000	ug/kg	C	U	2.200	ug/kg	D	U
gamma-BHC (Lindane)	2.300	ug/kg	C	U	2.000	ug/kg	C	U	2.200	ug/kg	D	U
gamma-Chlordane	2.300	ug/kg	C	U	2.000	ug/kg	C	U	2.200	ug/kg	D	U

TABLE F-3A
(Continued)

PHASE II - CHEMICAL PARAMETERS

BORING NUMBER	SF-SS-17			SF-SS-21			SF-SS-10		
SAMPLE NUMBER	110297			110307			110317		
	0-0.5			0-0.5			0-0.5		
SAMPLING DATE	03/18/93			03/18/93			03/19/93		
CHEMICAL PARAMETERS	RESULTS	UNITS	L VQ	RESULTS	UNITS	L VQ	RESULTS	UNITS	L VQ
Inorganics									
Aluminum	16300.000	mg/kg	C -	10900.000	mg/kg	C -	12300.000	mg/kg	D -
Antimony	1.200	mg/kg	C UJ	1.300	mg/kg	C UJ	0.920	mg/kg	D UJ
Arsenic	5.500	mg/kg	C -	9.300	mg/kg	C -	7.800	mg/kg	D -
Barium	151.000	mg/kg	C -	110.000	mg/kg	C -	96.100	mg/kg	D -
Beryllium	1.900	mg/kg	C -	1.000	mg/kg	C -	0.830	mg/kg	D -
Cadmium	1.200	mg/kg	C U	1.300	mg/kg	C U	0.920	mg/kg	D U
Calcium	88500.000	mg/kg	C -	12900.000	mg/kg	C -	44600.000	mg/kg	D -
Chromium	21.500	mg/kg	C -	14.000	mg/kg	C -	12.800	mg/kg	D -
Cobalt	3.700	mg/kg	C -	7.300	mg/kg	C -	7.100	mg/kg	D -
Copper	11.400	mg/kg	C -	17.600	mg/kg	C -	17.100	mg/kg	D -
Cyanide	0.150	mg/kg	C -	0.210	mg/kg	C -	0.320	mg/kg	D -
Iron	16500.000	mg/kg	C -	18400.000	mg/kg	C -	17300.000	mg/kg	D -
Lead	24.900	mg/kg	C -	23.600	mg/kg	C -	30.800	mg/kg	D -
Magnesium	18900.000	mg/kg	C -	6490.000	mg/kg	C -	13200.000	mg/kg	D -
Manganese	2650.000	mg/kg	C -	498.000	mg/kg	C -	624.000	mg/kg	D -
Mercury	0.120	mg/kg	C UJ	0.120	mg/kg	C UJ	0.120	mg/kg	D UJ
Molybdenum	4.900	mg/kg	C U	5.200	mg/kg	C -	5.300	mg/kg	D -
Nickel	11.900	mg/kg	C -	15.100	mg/kg	C -	15.100	mg/kg	D -
Potassium	1600.000	mg/kg	C -	1270.000	mg/kg	C -	1700.000	mg/kg	D -
Selenium	0.480	mg/kg	C U	0.520	mg/kg	C U	0.360	mg/kg	D U
Silicon	939.000	mg/kg	C J	697.000	mg/kg	C J	562.000	mg/kg	D J
Silver	4.400	mg/kg	C J	5.500	mg/kg	C J	4.800	mg/kg	D J
Sodium	328.000	mg/kg	C -	69.500	mg/kg	C -	114.000	mg/kg	D -
Thallium	0.480	mg/kg	C U	0.520	mg/kg	C U	0.360	mg/kg	D U
Vanadium	21.400	mg/kg	C -	29.000	mg/kg	C -	27.200	mg/kg	D -
Zinc	67.800	mg/kg	C -	51.500	mg/kg	C -	50.500	mg/kg	D -
Volatile Organics									
1,1,1-Trichloroethane	12.000	ug/kg	C U	13.000	ug/kg	C U	13.000	ug/kg	D U
1,1,2,2-Tetrachloroethane	12.000	ug/kg	C U	13.000	ug/kg	C U	13.000	ug/kg	D U
1,1,2-Trichloroethane	12.000	ug/kg	C U	13.000	ug/kg	C U	13.000	ug/kg	D U
1,1-Dichloroethane	12.000	ug/kg	C U	13.000	ug/kg	C U	13.000	ug/kg	D U
1,1-Dichloroethene	12.000	ug/kg	C U	13.000	ug/kg	C U	13.000	ug/kg	D U
1,2-Dichloroethane	12.000	ug/kg	C U	13.000	ug/kg	C U	13.000	ug/kg	D U
1,2-Dichloroethene	12.000	ug/kg	C U	13.000	ug/kg	C U	13.000	ug/kg	D U
1,2-Dichloropropane	12.000	ug/kg	C U	13.000	ug/kg	C U	13.000	ug/kg	D U
2-Butanone	10.000	ug/kg	C U	10.000	ug/kg	C U	13.000	ug/kg	D U
2-Hexanone	12.000	ug/kg	C U	13.000	ug/kg	C U	13.000	ug/kg	D U
4-Methyl-2-pentanone	12.000	ug/kg	C U	13.000	ug/kg	C U	13.000	ug/kg	D U
Acetone	12.000	ug/kg	C UJ	7.000	ug/kg	C J	13.000	ug/kg	D UJ
Benzene	12.000	ug/kg	C U	13.000	ug/kg	C U	13.000	ug/kg	D U

TABLE F-3A
(Continued)

PHASE II - CHEMICAL PARAMETERS

BORING NUMBER	SF-SS-17			SF-SS-21			SF-SS-10		
SAMPLE NUMBER	110297			110307			110317		
	0-0.5			0-0.5			0-0.5		
SAMPLING DATE	03/18/93			03/18/93			03/19/93		
CHEMICAL PARAMETERS	RESULTS	UNITS	L VQ	RESULTS	UNITS	L VQ	RESULTS	UNITS	L VQ
Volatile Organics									
Bromodichloromethane	12.000	ug/kg	C U	13.000	ug/kg	C U	13.000	ug/kg	D U
Bromoform	12.000	ug/kg	C U	13.000	ug/kg	C U	13.000	ug/kg	D U
Bromomethane	12.000	ug/kg	C UJ	13.000	ug/kg	C UJ	13.000	ug/kg	D U
Carbon Tetrachloride	12.000	ug/kg	C U	13.000	ug/kg	C U	13.000	ug/kg	D U
Carbon disulfide	12.000	ug/kg	C U	13.000	ug/kg	C U	13.000	ug/kg	D U
Chlorobenzene	12.000	ug/kg	C U	13.000	ug/kg	C U	13.000	ug/kg	D U
Chloroethane	12.000	ug/kg	C U	13.000	ug/kg	C U	13.000	ug/kg	D U
Chloroform	12.000	ug/kg	C U	13.000	ug/kg	C U	13.000	ug/kg	D U
Chloromethane	12.000	ug/kg	C U	13.000	ug/kg	C U	13.000	ug/kg	D R
Dibromochloromethane	12.000	ug/kg	C U	13.000	ug/kg	C U	13.000	ug/kg	D U
Ethylbenzene	12.000	ug/kg	C U	13.000	ug/kg	C U	13.000	ug/kg	D U
Methylene chloride	10.000	ug/kg	C U	10.000	ug/kg	C U	13.000	ug/kg	D UJ
Styrene	12.000	ug/kg	C U	13.000	ug/kg	C U	13.000	ug/kg	D U
Tetrachloroethene	12.000	ug/kg	C U	13.000	ug/kg	C U	13.000	ug/kg	D U
Toluene	12.000	ug/kg	C U	13.000	ug/kg	C U	13.000	ug/kg	D U
Trichloroethene	12.000	ug/kg	C U	13.000	ug/kg	C U	13.000	ug/kg	D U
Vinyl Acetate	12.000	ug/kg	C U	13.000	ug/kg	C U	13.000	ug/kg	D UJ
Vinyl chloride	12.000	ug/kg	C U	13.000	ug/kg	C U	13.000	ug/kg	D U
Xylenes, Total	12.000	ug/kg	C U	13.000	ug/kg	C U	13.000	ug/kg	D U
cis-1,3-Dichloropropene	12.000	ug/kg	C U	13.000	ug/kg	C U	13.000	ug/kg	D U
trans-1,3-Dichloropropene	12.000	ug/kg	C U	13.000	ug/kg	C U	13.000	ug/kg	D U
Semivolatile Organics									
1,2,4-Trichlorobenzene	420.000	ug/kg	C U	450.000	ug/kg	C U	430.000	ug/kg	D U
1,2-Dichlorobenzene	420.000	ug/kg	C U	450.000	ug/kg	C U	430.000	ug/kg	D U
1,2-Diphenylhydrazine	420.000	ug/kg	C UJ	450.000	ug/kg	C UJ	NA		
1,3-Dichlorobenzene	420.000	ug/kg	C U	450.000	ug/kg	C U	430.000	ug/kg	D U
1,4-Dichlorobenzene	420.000	ug/kg	C U	450.000	ug/kg	C U	430.000	ug/kg	D U
2,4,5-Trichlorophenol	1000.000	ug/kg	C U	1100.000	ug/kg	C U	1000.000	ug/kg	D U
2,4,6-Trichlorophenol	420.000	ug/kg	C U	450.000	ug/kg	C U	430.000	ug/kg	D U
2,4-Dichlorophenol	420.000	ug/kg	C U	450.000	ug/kg	C U	430.000	ug/kg	D U
2,4-Dimethylphenol	420.000	ug/kg	C U	450.000	ug/kg	C U	430.000	ug/kg	D U
2,4-Dinitrophenol	2000.000	ug/kg	C R	2200.000	ug/kg	C R	1000.000	ug/kg	D R
2,4-Dinitrotoluene	420.000	ug/kg	C UJ	450.000	ug/kg	C UJ	430.000	ug/kg	D UJ
2,6-Dinitrotoluene	420.000	ug/kg	C UJ	450.000	ug/kg	C UJ	430.000	ug/kg	D UJ
2-Chloronaphthalene	420.000	ug/kg	C U	450.000	ug/kg	C U	430.000	ug/kg	D U
2-Chlorophenol	420.000	ug/kg	C U	450.000	ug/kg	C U	430.000	ug/kg	D U
2-Methylnaphthalene	420.000	ug/kg	C U	450.000	ug/kg	C U	430.000	ug/kg	D U
2-Methylphenol	420.000	ug/kg	C U	450.000	ug/kg	C U	430.000	ug/kg	D U
2-Nitroaniline	1000.000	ug/kg	C U	1100.000	ug/kg	C U	1000.000	ug/kg	D U
2-Nitrophenol	420.000	ug/kg	C U	450.000	ug/kg	C U	430.000	ug/kg	D U

TABLE F-3A
(Continued)

PHASE II - CHEMICAL PARAMETERS

BORING NUMBER	SF-SS-17			SF-SS-21			SF-SS-10		
SAMPLE NUMBER	110297			110307			110317		
	0-0.5			0-0.5			0-0.5		
SAMPLING DATE	03/18/93			03/18/93			03/19/93		
CHEMICAL PARAMETERS	RESULTS	UNITS	L VQ	RESULTS	UNITS	L VQ	RESULTS	UNITS	L VQ
Semivolatile Organics									
3,3'-Dichlorobenzidine	420.000	ug/kg	C U	450.000	ug/kg	C U	430.000	ug/kg	D U
3-Nitroaniline	1000.000	ug/kg	C U	1100.000	ug/kg	C U	1000.000	ug/kg	D U
4,6-Dinitro-2-methylphenol	1000.000	ug/kg	C R	1100.000	ug/kg	C R	1000.000	ug/kg	D R
4-Bromophenyl phenyl ether	420.000	ug/kg	C U	450.000	ug/kg	C U	430.000	ug/kg	D U
4-Chloro-3-methylphenol	420.000	ug/kg	C U	450.000	ug/kg	C U	430.000	ug/kg	D U
4-Chlorophenylphenyl ether	420.000	ug/kg	C U	450.000	ug/kg	C U	430.000	ug/kg	D U
4-Methylphenol	420.000	ug/kg	C U	450.000	ug/kg	C U	430.000	ug/kg	D U
4-Nitroaniline	1000.000	ug/kg	C U	1100.000	ug/kg	C U	1000.000	ug/kg	D U
4-Nitrophenol	1000.000	ug/kg	C U	1100.000	ug/kg	C U	1000.000	ug/kg	D R
Acenaphthene	140.000	ug/kg	C J	450.000	ug/kg	C U	430.000	ug/kg	D U
Acenaphthylene	590.000	ug/kg	C -	450.000	ug/kg	C U	430.000	ug/kg	D U
Anthracene	560.000	ug/kg	C -	450.000	ug/kg	C U	87.000	ug/kg	D J
Benzo(a)anthracene	2500.000	ug/kg	C -	450.000	ug/kg	C U	250.000	ug/kg	D J
Benzo(a)pyrene	4700.000	ug/kg	C -	450.000	ug/kg	C U	270.000	ug/kg	D J
Benzo(b)fluoranthene	3900.000	ug/kg	C -	450.000	ug/kg	C U	240.000	ug/kg	D J
Benzo(g,h,i)perylene	3100.000	ug/kg	C -	450.000	ug/kg	C U	150.000	ug/kg	D J
Benzo(k)fluoranthene	3300.000	ug/kg	C -	450.000	ug/kg	C U	240.000	ug/kg	D J
Benzoic acid	52.000	ug/kg	C J	2200.000	ug/kg	C UJ	2100.000	ug/kg	D R
Benzyl alcohol	420.000	ug/kg	C R	450.000	ug/kg	C R	430.000	ug/kg	D R
Butyl benzyl phthalate	420.000	ug/kg	C U	450.000	ug/kg	C U	430.000	ug/kg	D U
Carbazole	170.000	ug/kg	C J	450.000	ug/kg	C U	430.000	ug/kg	D U
Chrysene	3200.000	ug/kg	C -	450.000	ug/kg	C U	310.000	ug/kg	D J
Di-n-butyl phthalate	330.000	ug/kg	C U	330.000	ug/kg	C U	430.000	ug/kg	D U
Di-n-octyl phthalate	420.000	ug/kg	C U	450.000	ug/kg	C U	430.000	ug/kg	D UJ
Dibenzo(a,h)anthracene	1100.000	ug/kg	C -	450.000	ug/kg	C U	66.000	ug/kg	D J
Dibenzofuran	130.000	ug/kg	C J	450.000	ug/kg	C U	430.000	ug/kg	D U
Diethyl phthalate	420.000	ug/kg	C U	450.000	ug/kg	C U	430.000	ug/kg	D U
Dimethyl phthalate	420.000	ug/kg	C U	450.000	ug/kg	C U	430.000	ug/kg	D U
Fluoranthene	4300.000	ug/kg	C -	450.000	ug/kg	C U	640.000	ug/kg	D -
Fluorene	220.000	ug/kg	C J	450.000	ug/kg	C U	430.000	ug/kg	D U
Hexachlorobenzene	420.000	ug/kg	C U	450.000	ug/kg	C U	430.000	ug/kg	D U
Hexachlorobutadiene	420.000	ug/kg	C U	450.000	ug/kg	C U	430.000	ug/kg	D U
Hexachlorocyclopentadiene	420.000	ug/kg	C U	450.000	ug/kg	C U	430.000	ug/kg	D UJ
Hexachloroethane	420.000	ug/kg	C U	450.000	ug/kg	C U	430.000	ug/kg	D U
Indeno(1,2,3-cd)pyrene	3000.000	ug/kg	C -	450.000	ug/kg	C U	150.000	ug/kg	D J
Isophorone	420.000	ug/kg	C U	450.000	ug/kg	C U	430.000	ug/kg	D U
N-Nitroso-di-n-propylamine	420.000	ug/kg	C U	450.000	ug/kg	C U	430.000	ug/kg	D U
N-Nitrosodimethylamine	420.000	ug/kg	C U	450.000	ug/kg	C U	NA		
N-Nitrosodiphenylamine	420.000	ug/kg	C U	450.000	ug/kg	C U	430.000	ug/kg	D U
Naphthalene	420.000	ug/kg	C U	450.000	ug/kg	C U	430.000	ug/kg	D U
Nitrobenzene	420.000	ug/kg	C U	450.000	ug/kg	C U	430.000	ug/kg	D U
Pentachlorophenol	1000.000	ug/kg	C U	1100.000	ug/kg	C U	1000.000	ug/kg	D UJ

0589

5174

TABLE F-3A
(Continued)

PHASE II - CHEMICAL PARAMETERS

BORING NUMBER	SF-SS-17			SF-SS-21			SF-SS-10		
SAMPLE NUMBER	110297			110307			110317		
	0-0.5			0-0.5			0-0.5		
SAMPLING DATE	03/18/93			03/18/93			03/19/93		
CHEMICAL PARAMETERS	RESULTS	UNITS	L VQ	RESULTS	UNITS	L VQ	RESULTS	UNITS	L VQ
Semivolatile Organics									
Phenanthrene	2300.000	ug/kg	C -	450.000	ug/kg	C U	410.000	ug/kg	D J
Phenol	420.000	ug/kg	C U	450.000	ug/kg	C U	430.000	ug/kg	D U
Pyrene	3500.000	ug/kg	C -	450.000	ug/kg	C U	480.000	ug/kg	D -
Tributyl phosphate	420.000	ug/kg	C U	450.000	ug/kg	C U	NA		
bis(2-Chloroethoxy)methane	420.000	ug/kg	C U	450.000	ug/kg	C U	430.000	ug/kg	D U
bis(2-Chloroethyl)ether	420.000	ug/kg	C U	450.000	ug/kg	C U	430.000	ug/kg	D U
bis(2-Chloroisopropyl) ether	420.000	ug/kg	C U	450.000	ug/kg	C U	430.000	ug/kg	D UJ
bis(2-Ethylhexyl) phthalate	100.000	ug/kg	C J	450.000	ug/kg	C U	91.000	ug/kg	D J
p-Chloroaniline	420.000	ug/kg	C U	450.000	ug/kg	C U	430.000	ug/kg	D U
Pesticide Organics/PCBs									
4,4'-DDD	4.200	ug/kg	C U	4.500	ug/kg	C U	4.300	ug/kg	D U
4,4'-DDE	4.200	ug/kg	C U	4.500	ug/kg	C U	4.300	ug/kg	D U
4,4'-DDT	4.200	ug/kg	C U	4.500	ug/kg	C U	4.300	ug/kg	D U
Aldrin	2.100	ug/kg	C U	2.300	ug/kg	C U	2.200	ug/kg	D U
Aroclor-1016	42.000	ug/kg	C U	45.000	ug/kg	C U	43.000	ug/kg	D U
Aroclor-1221	84.000	ug/kg	C U	91.000	ug/kg	C U	87.000	ug/kg	D U
Aroclor-1232	42.000	ug/kg	C U	45.000	ug/kg	C U	43.000	ug/kg	D U
Aroclor-1242	42.000	ug/kg	C U	45.000	ug/kg	C U	43.000	ug/kg	D U
Aroclor-1248	42.000	ug/kg	C U	45.000	ug/kg	C U	43.000	ug/kg	D U
Aroclor-1254	42.000	ug/kg	C U	45.000	ug/kg	C U	43.000	ug/kg	D U
Aroclor-1260	42.000	ug/kg	C U	45.000	ug/kg	C U	43.000	ug/kg	D U
Dieldrin	4.200	ug/kg	C U	4.500	ug/kg	C U	4.300	ug/kg	D U
Endosulfan II	4.200	ug/kg	C U	4.500	ug/kg	C U	4.300	ug/kg	D U
Endosulfan sulfate	4.200	ug/kg	C U	4.500	ug/kg	C U	4.300	ug/kg	D U
Endosulfan-I	2.100	ug/kg	C U	2.300	ug/kg	C U	2.200	ug/kg	D U
Endrin	4.200	ug/kg	C U	4.500	ug/kg	C U	4.300	ug/kg	D U
Endrin aldehyde	4.200	ug/kg	C U	4.500	ug/kg	C U	4.300	ug/kg	D U
Endrin ketone	4.200	ug/kg	C U	4.500	ug/kg	C U	4.300	ug/kg	D U
Heptachlor	2.100	ug/kg	C U	2.300	ug/kg	C U	2.200	ug/kg	D U
Heptachlor epoxide	2.100	ug/kg	C U	2.300	ug/kg	C U	2.200	ug/kg	D U
Methoxychlor	21.000	ug/kg	C U	23.000	ug/kg	C U	22.000	ug/kg	D U
Toxaphene	210.000	ug/kg	C U	230.000	ug/kg	C U	220.000	ug/kg	D U
alpha-BHC	2.100	ug/kg	C U	2.300	ug/kg	C U	2.200	ug/kg	D U
alpha-Chlordane	2.100	ug/kg	C U	2.300	ug/kg	C U	2.200	ug/kg	D U
beta-BHC	2.100	ug/kg	C U	2.300	ug/kg	C U	2.200	ug/kg	D U
delta-BHC	2.100	ug/kg	C U	2.300	ug/kg	C U	2.200	ug/kg	D U
gamma-BHC (Lindane)	2.100	ug/kg	C U	2.300	ug/kg	C U	2.200	ug/kg	D U
gamma-Chlordane	2.100	ug/kg	C U	2.300	ug/kg	C U	2.200	ug/kg	D U

TABLE F-3A
(Continued)

PHASE II - CHEMICAL PARAMETERS

BORING NUMBER	SF-SS-11			SF-SS-16			SF-SS-19		
SAMPLE NUMBER	110321			110343			110365		
	0-0.5			0-0.5			0-0.5		
SAMPLING DATE	03/19/93			03/22/93			03/22/93		
CHEMICAL PARAMETERS	RESULTS	UNITS	L VQ	RESULTS	UNITS	L VQ	RESULTS	UNITS	L VQ
Inorganics									
Aluminum	11700.000	mg/kg	C -	10700.000	mg/kg	C -	7110.000	mg/kg	C -
Antimony	0.890	mg/kg	C UJ	5.600	mg/kg	C R	0.850	mg/kg	C R
Arsenic	4.900	mg/kg	C -	5.900	mg/kg	C -	4.600	mg/kg	C -
Barium	75.500	mg/kg	C -	72.600	mg/kg	C -	55.100	mg/kg	C -
Beryllium	0.590	mg/kg	C -	0.840	mg/kg	C -	0.490	mg/kg	C -
Cadmium	0.890	mg/kg	C U	1.100	mg/kg	C U	0.850	mg/kg	C U
Calcium	67000.000	mg/kg	C -	42100.000	mg/kg	C -	87600.000	mg/kg	C -
Chromium	12.100	mg/kg	C -	13.100	mg/kg	C -	8.800	mg/kg	C -
Cobalt	6.600	mg/kg	C -	6.600	mg/kg	C -	4.500	mg/kg	C -
Copper	16.200	mg/kg	C -	15.800	mg/kg	C -	12.100	mg/kg	C -
Cyanide	0.120	mg/kg	C U	0.120	mg/kg	C U	0.120	mg/kg	C U
Iron	20200.000	mg/kg	C -	18600.000	mg/kg	C -	13300.000	mg/kg	C -
Lead	15.100	mg/kg	C -	14.700	mg/kg	C J	46.000	mg/kg	C J
Magnesium	16700.000	mg/kg	C -	13600.000	mg/kg	C J	28200.000	mg/kg	C J
Manganese	662.000	mg/kg	C -	488.000	mg/kg	C -	368.000	mg/kg	C -
Mercury	0.110	mg/kg	C UJ	0.120	mg/kg	C U	0.120	mg/kg	C U
Molybdenum	5.800	mg/kg	C -	5.100	mg/kg	C -	4.000	mg/kg	C -
Nickel	15.100	mg/kg	C -	16.300	mg/kg	C U	12.800	mg/kg	C -
Potassium	1330.000	mg/kg	C -	1690.000	mg/kg	C -	1220.000	mg/kg	C -
Selenium	0.380	mg/kg	C U	0.470	mg/kg	C UJ	0.360	mg/kg	C UJ
Silicon	466.000	mg/kg	C J	555.000	mg/kg	C J	421.000	mg/kg	C J
Silver	5.600	mg/kg	C J	5.700	mg/kg	C -	3.200	mg/kg	C -
Sodium	150.000	mg/kg	C -	88.700	mg/kg	C -	122.000	mg/kg	C -
Thallium	0.380	mg/kg	C U	0.470	mg/kg	C U	0.360	mg/kg	C U
Vanadium	24.700	mg/kg	C -	27.600	mg/kg	C -	18.900	mg/kg	C -
Zinc	47.800	mg/kg	C -	55.400	mg/kg	C -	36.800	mg/kg	C -
Volatile Organics									
1,1,1-Trichloroethane	12.000	ug/kg	C U	6.000	ug/kg	C U	7.000	ug/kg	C U
1,1,2,2-Tetrachloroethane	12.000	ug/kg	C U	6.000	ug/kg	C U	7.000	ug/kg	C U
1,1,2-Trichloroethane	12.000	ug/kg	C U	6.000	ug/kg	C U	7.000	ug/kg	C U
1,1-Dichloroethane	12.000	ug/kg	C U	6.000	ug/kg	C UJ	7.000	ug/kg	C UJ
1,1-Dichloroethene	12.000	ug/kg	C U	6.000	ug/kg	C U	7.000	ug/kg	C U
1,2-Dichloroethane	12.000	ug/kg	C U	6.000	ug/kg	C U	7.000	ug/kg	C U
1,2-Dichloroethene	12.000	ug/kg	C U	6.000	ug/kg	C U	7.000	ug/kg	C U
1,2-Dichloropropane	12.000	ug/kg	C U	6.000	ug/kg	C U	7.000	ug/kg	C U
2-Butanone	12.000	ug/kg	C U	13.000	ug/kg	C UJ	14.000	ug/kg	C UJ
2-Hexanone	12.000	ug/kg	C U	13.000	ug/kg	C U	14.000	ug/kg	C U
4-Methyl-2-pentanone	12.000	ug/kg	C U	13.000	ug/kg	C U	14.000	ug/kg	C U
Acetone	12.000	ug/kg	C UJ	13.000	ug/kg	C U	30.000	ug/kg	C U
Benzene	12.000	ug/kg	C U	6.000	ug/kg	C U	7.000	ug/kg	C U

0591
5174

TABLE F-3A
(Continued)

PHASE II - CHEMICAL PARAMETERS

BORING NUMBER	SF-SS-11			SF-SS-16			SF-SS-19		
SAMPLE NUMBER	110321			110343			110365		
	0-0.5			0-0.5			0-0.5		
SAMPLING DATE	03/19/93			03/22/93			03/22/93		
CHEMICAL PARAMETERS	RESULTS	UNITS	L VQ	RESULTS	UNITS	L VQ	RESULTS	UNITS	L VQ
Volatile Organics									
Bromodichloromethane	12.000	ug/kg	C U	6.000	ug/kg	C U	7.000	ug/kg	C U
Bromoform	12.000	ug/kg	C U	6.000	ug/kg	C U	7.000	ug/kg	C U
Bromomethane	12.000	ug/kg	C U	13.000	ug/kg	C UJ	14.000	ug/kg	C UJ
Carbon Tetrachloride	12.000	ug/kg	C U	6.000	ug/kg	C U	7.000	ug/kg	C U
Carbon disulfide	12.000	ug/kg	C U	6.000	ug/kg	C U	7.000	ug/kg	C U
Chlorobenzene	12.000	ug/kg	C U	6.000	ug/kg	C U	7.000	ug/kg	C U
Chloroethane	12.000	ug/kg	C U	13.000	ug/kg	C UJ	14.000	ug/kg	C UJ
Chloroform	12.000	ug/kg	C U	6.000	ug/kg	C U	7.000	ug/kg	C U
Chloromethane	12.000	ug/kg	C R	13.000	ug/kg	C U	14.000	ug/kg	C U
Dibromochloromethane	12.000	ug/kg	C U	6.000	ug/kg	C U	7.000	ug/kg	C U
Ethylbenzene	12.000	ug/kg	C U	6.000	ug/kg	C U	7.000	ug/kg	C U
Methylene chloride	12.000	ug/kg	C UJ	6.000	ug/kg	C UJ	14.000	ug/kg	C UJ
Styrene	12.000	ug/kg	C U	6.000	ug/kg	C U	7.000	ug/kg	C U
Tetrachloroethene	12.000	ug/kg	C U	6.000	ug/kg	C U	7.000	ug/kg	C U
Toluene	12.000	ug/kg	C U	6.000	ug/kg	C U	7.000	ug/kg	C U
Trichloroethene	12.000	ug/kg	C U	6.000	ug/kg	C U	7.000	ug/kg	C U
Vinyl Acetate	12.000	ug/kg	C UJ	13.000	ug/kg	C U	14.000	ug/kg	C U
Vinyl chloride	12.000	ug/kg	C U	13.000	ug/kg	C U	14.000	ug/kg	C U
Xylenes, Total	12.000	ug/kg	C U	6.000	ug/kg	C U	7.000	ug/kg	C U
cis-1,3-Dichloropropene	12.000	ug/kg	C U	6.000	ug/kg	C U	7.000	ug/kg	C U
trans-1,3-Dichloropropene	12.000	ug/kg	C U	6.000	ug/kg	C U	7.000	ug/kg	C U
Semivolatile Organics									
1,2,4-Trichlorobenzene	410.000	ug/kg	C U	420.000	ug/kg	C U	410.000	ug/kg	C U
1,2-Dichlorobenzene	410.000	ug/kg	C U	420.000	ug/kg	C U	410.000	ug/kg	C U
1,2-Diphenylhydrazine	NA			420.000	ug/kg	C U	410.000	ug/kg	C U
1,3-Dichlorobenzene	410.000	ug/kg	C U	420.000	ug/kg	C U	410.000	ug/kg	C U
1,4-Dichlorobenzene	410.000	ug/kg	C U	420.000	ug/kg	C U	410.000	ug/kg	C U
2,4,5-Trichlorophenol	1000.000	ug/kg	C U	1000.000	ug/kg	C U	1000.000	ug/kg	C U
2,4,6-Trichlorophenol	410.000	ug/kg	C U	420.000	ug/kg	C U	410.000	ug/kg	C U
2,4-Dichlorophenol	410.000	ug/kg	C U	420.000	ug/kg	C U	410.000	ug/kg	C U
2,4-Dimethylphenol	410.000	ug/kg	C U	420.000	ug/kg	C U	410.000	ug/kg	C U
2,4-Dinitrophenol	1000.000	ug/kg	C R	2000.000	ug/kg	C UJ	2000.000	ug/kg	C UJ
2,4-Dinitrotoluene	410.000	ug/kg	C UJ	420.000	ug/kg	C U	410.000	ug/kg	C U
2,6-Dinitrotoluene	410.000	ug/kg	C UJ	420.000	ug/kg	C U	410.000	ug/kg	C U
2-Chloronaphthalene	410.000	ug/kg	C U	420.000	ug/kg	C U	410.000	ug/kg	C U
2-Chlorophenol	410.000	ug/kg	C U	420.000	ug/kg	C U	410.000	ug/kg	C U
2-Methylnaphthalene	410.000	ug/kg	C U	420.000	ug/kg	C U	410.000	ug/kg	C U
2-Methylphenol	410.000	ug/kg	C U	420.000	ug/kg	C U	410.000	ug/kg	C U
2-Nitroaniline	1000.000	ug/kg	C U	1000.000	ug/kg	C U	1000.000	ug/kg	C U
2-Nitrophenol	410.000	ug/kg	C U	420.000	ug/kg	C U	410.000	ug/kg	C U

TABLE F-3A
(Continued)

PHASE II - CHEMICAL PARAMETERS

BORING NUMBER	SF-SS-11				SF-SS-16				SF-SS-19			
SAMPLE NUMBER	110321				110343				110365			
	0-0.5				0-0.5				0-0.5			
SAMPLING DATE	03/19/93				03/22/93				03/22/93			
CHEMICAL PARAMETERS	RESULTS	UNITS	L	VQ	RESULTS	UNITS	L	VQ	RESULTS	UNITS	L	VQ
Semivolatile Organics												
3,3'-Dichlorobenzidine	410.000	ug/kg	C	U	420.000	ug/kg	C	U	410.000	ug/kg	C	U
3-Nitroaniline	1000.000	ug/kg	C	U	1000.000	ug/kg	C	U	1000.000	ug/kg	C	U
4,6-Dinitro-2-methylphenol	1000.000	ug/kg	C	R	1000.000	ug/kg	C	UJ	1000.000	ug/kg	C	UJ
4-Bromophenyl phenyl ether	410.000	ug/kg	C	U	420.000	ug/kg	C	U	410.000	ug/kg	C	U
4-Chloro-3-methylphenol	410.000	ug/kg	C	U	420.000	ug/kg	C	U	410.000	ug/kg	C	U
4-Chlorophenylphenyl ether	410.000	ug/kg	C	U	420.000	ug/kg	C	U	410.000	ug/kg	C	U
4-Methylphenol	410.000	ug/kg	C	U	420.000	ug/kg	C	U	410.000	ug/kg	C	U
4-Nitroaniline	1000.000	ug/kg	C	U	1000.000	ug/kg	C	U	1000.000	ug/kg	C	U
4-Nitrophenol	1000.000	ug/kg	C	R	1000.000	ug/kg	C	U	1000.000	ug/kg	C	U
Acenaphthene	410.000	ug/kg	C	U	420.000	ug/kg	C	U	410.000	ug/kg	C	U
Acenaphthylene	410.000	ug/kg	C	U	420.000	ug/kg	C	U	410.000	ug/kg	C	U
Anthracene	410.000	ug/kg	C	U	59.000	ug/kg	C	J	410.000	ug/kg	C	U
Benzo(a)anthracene	410.000	ug/kg	C	U	160.000	ug/kg	C	J	54.000	ug/kg	C	J
Benzo(a)pyrene	51.000	ug/kg	C	J	170.000	ug/kg	C	J	59.000	ug/kg	C	J
Benzo(b)fluoranthene	46.000	ug/kg	G	J	160.000	ug/kg	C	J	66.000	ug/kg	C	J
Benzo(g,h,i)perylene	53.000	ug/kg	C	J	100.000	ug/kg	C	J	62.000	ug/kg	C	J
Benzo(k)fluoranthene	49.000	ug/kg	C	J	180.000	ug/kg	C	J	71.000	ug/kg	C	J
Benzoic acid	2000.000	ug/kg	C	R	78.000	ug/kg	C	J	72.000	ug/kg	C	J
Benzyl alcohol	410.000	ug/kg	C	R	420.000	ug/kg	C	U	410.000	ug/kg	C	U
Butyl benzyl phthalate	410.000	ug/kg	C	U	420.000	ug/kg	C	U	410.000	ug/kg	C	U
Carbazole	410.000	ug/kg	C	U	420.000	ug/kg	C	U	410.000	ug/kg	C	U
Chrysene	60.000	ug/kg	C	J	200.000	ug/kg	C	J	77.000	ug/kg	C	J
Di-n-butyl phthalate	410.000	ug/kg	C	U	420.000	ug/kg	C	U	410.000	ug/kg	C	U
Di-n-octyl phthalate	410.000	ug/kg	C	UJ	420.000	ug/kg	C	U	410.000	ug/kg	C	U
Dibenzo(a,h)anthracene	410.000	ug/kg	C	U	43.000	ug/kg	C	J	410.000	ug/kg	C	U
Dibenzofuran	410.000	ug/kg	C	U	420.000	ug/kg	C	U	410.000	ug/kg	C	U
Diethyl phthalate	410.000	ug/kg	C	U	420.000	ug/kg	C	U	410.000	ug/kg	C	U
Dimethyl phthalate	62.000	ug/kg	C	J	420.000	ug/kg	C	U	410.000	ug/kg	C	U
Fluoranthene	73.000	ug/kg	C	J	340.000	ug/kg	C	J	87.000	ug/kg	C	J
Fluorene	410.000	ug/kg	C	U	420.000	ug/kg	C	U	410.000	ug/kg	C	U
Hexachlorobenzene	410.000	ug/kg	C	U	420.000	ug/kg	C	U	410.000	ug/kg	C	U
Hexachlorobutadiene	410.000	ug/kg	C	U	420.000	ug/kg	C	U	410.000	ug/kg	C	U
Hexachlorocyclopentadiene	410.000	ug/kg	C	UJ	420.000	ug/kg	C	U	410.000	ug/kg	C	U
Hexachloroethane	410.000	ug/kg	C	U	420.000	ug/kg	C	U	410.000	ug/kg	C	U
Indeno(1,2,3-cd)pyrene	410.000	ug/kg	C	U	110.000	ug/kg	C	J	51.000	ug/kg	C	J
Isophorone	410.000	ug/kg	C	U	420.000	ug/kg	C	U	410.000	ug/kg	C	U
N-Nitroso-di-n-propylamine	410.000	ug/kg	C	U	420.000	ug/kg	C	U	410.000	ug/kg	C	U
N-Nitrosodimethylamine	NA				420.000	ug/kg	C	U	410.000	ug/kg	C	U
N-Nitrosodiphenylamine	410.000	ug/kg	C	U	420.000	ug/kg	C	U	410.000	ug/kg	C	U
Naphthalene	410.000	ug/kg	C	U	420.000	ug/kg	C	U	410.000	ug/kg	C	U
Nitrobenzene	410.000	ug/kg	C	U	420.000	ug/kg	C	U	410.000	ug/kg	C	U
Pentachlorophenol	1000.000	ug/kg	C	UJ	1000.000	ug/kg	C	U	1000.000	ug/kg	C	U

TABLE F-3A
(Continued)

PHASE II - CHEMICAL PARAMETERS

BORING NUMBER	SF-SS-11			SF-SS-16			SF-SS-19		
SAMPLE NUMBER	110321			110343			110365		
	0-0.5			0-0.5			0-0.5		
SAMPLING DATE	03/19/93			03/22/93			03/22/93		
CHEMICAL PARAMETERS	RESULTS	UNITS	L VQ	RESULTS	UNITS	L VQ	RESULTS	UNITS	L VQ
Semivolatile Organics									
Phenanthrene	410.000	ug/kg	C U	200.000	ug/kg	C J	410.000	ug/kg	C U
Phenol	410.000	ug/kg	C U	420.000	ug/kg	C U	410.000	ug/kg	C U
Pyrene	64.000	ug/kg	C J	270.000	ug/kg	C J	80.000	ug/kg	C J
Tributyl phosphate	NA			420.000	ug/kg	C U	410.000	ug/kg	C U
bis(2-Chloroethoxy)methane	410.000	ug/kg	C U	420.000	ug/kg	C U	410.000	ug/kg	C U
bis(2-Chloroethyl)ether	410.000	ug/kg	C U	420.000	ug/kg	C U	410.000	ug/kg	C U
bis(2-Chloroisopropyl) ether	410.000	ug/kg	C UJ	420.000	ug/kg	C U	410.000	ug/kg	C U
bis(2-Ethylhexyl) phthalate	65.000	ug/kg	C J	95.000	ug/kg	C J	83.000	ug/kg	C J
p-Chloroaniline	410.000	ug/kg	C U	420.000	ug/kg	C U	410.000	ug/kg	C U
Pesticide Organics/PCBs									
4,4'-DDD	4.100	ug/kg	C U	4.300	ug/kg	C U	4.100	ug/kg	C U
4,4'-DDE	4.100	ug/kg	C U	4.300	ug/kg	C U	4.100	ug/kg	C U
4,4'-DDT	4.100	ug/kg	C U	4.300	ug/kg	C U	4.100	ug/kg	C U
Aldrin	2.100	ug/kg	C U	2.200	ug/kg	C U	2.100	ug/kg	C U
Aroclor-1016	41.000	ug/kg	C U	43.000	ug/kg	C U	41.000	ug/kg	C U
Aroclor-1221	83.000	ug/kg	C U	86.000	ug/kg	C U	83.000	ug/kg	C U
Aroclor-1232	41.000	ug/kg	C U	43.000	ug/kg	C U	41.000	ug/kg	C U
Aroclor-1242	41.000	ug/kg	C U	43.000	ug/kg	C U	41.000	ug/kg	C U
Aroclor-1248	41.000	ug/kg	C U	43.000	ug/kg	C U	41.000	ug/kg	C U
Aroclor-1254	41.000	ug/kg	C U	43.000	ug/kg	C U	41.000	ug/kg	C U
Aroclor-1260	41.000	ug/kg	C U	43.000	ug/kg	C U	52.000	ug/kg	C -
Dieldrin	4.100	ug/kg	C U	4.300	ug/kg	C U	4.100	ug/kg	C U
Endosulfan II	4.100	ug/kg	C U	4.300	ug/kg	C U	4.100	ug/kg	C U
Endosulfan sulfate	4.100	ug/kg	C U	4.300	ug/kg	C U	4.100	ug/kg	C U
Endosulfan-I	2.100	ug/kg	C U	2.200	ug/kg	C U	2.100	ug/kg	C U
Endrin	4.100	ug/kg	C U	4.300	ug/kg	C U	4.100	ug/kg	C U
Endrin aldehyde	4.100	ug/kg	C U	4.300	ug/kg	C U	4.100	ug/kg	C U
Endrin ketone	4.100	ug/kg	C U	4.300	ug/kg	C U	4.100	ug/kg	C U
Heptachlor	2.100	ug/kg	C U	2.200	ug/kg	C U	2.100	ug/kg	C U
Heptachlor epoxide	2.100	ug/kg	C U	2.200	ug/kg	C U	2.100	ug/kg	C U
Methoxychlor	21.000	ug/kg	C U	22.000	ug/kg	C U	21.000	ug/kg	C U
Toxaphene	210.000	ug/kg	C U	220.000	ug/kg	C U	210.000	ug/kg	C U
alpha-BHC	2.100	ug/kg	C U	2.200	ug/kg	C U	2.100	ug/kg	C U
alpha-Chlordane	2.100	ug/kg	C U	2.200	ug/kg	C U	2.100	ug/kg	C U
beta-BHC	2.100	ug/kg	C U	2.200	ug/kg	C U	2.100	ug/kg	C U
delta-BHC	2.100	ug/kg	C U	2.200	ug/kg	C U	2.100	ug/kg	C U
gamma-BHC (Lindane)	2.100	ug/kg	C U	2.200	ug/kg	C U	2.100	ug/kg	C U
gamma-Chlordane	2.100	ug/kg	C U	2.200	ug/kg	C U	2.100	ug/kg	C U

TABLE F-3B
SOUTH FIELD
TENTATIVELY IDENTIFIED COMPOUNDS
SURFACE SOIL

Sample Number	Sample Location	Parameter	Result	Units
110335	SF-SB-15	2-pentanone, 4-hydroxy-4-met	110	ug/kg
110335	SF-SB-15	propanoic acid, 2-methyl-,	170	ug/kg
110335	SF-SB-15	tritetracontane	92	ug/kg
110335	SF-SB-15	hexanedionic acid, mono(2-eth	470	ug/kg
110335	SF-SB-15	iron, tricarbonyl n-(phenyl-	120	ug/kg
110335	SF-SB-15	tetratetracontane	93	ug/kg
110335	SF-SB-15	tritetracontane	96	ug/kg
110335	SF-SB-15	tritetracontane	140	ug/kg
110335	SF-SB-15	tritetracontane	160	ug/kg
110335	SF-SB-15	stigmast-5-en-3-ol, (3.beta.)-	160	ug/kg
110338	SF-SB-06	1,2-ethanediol, diacetate	21000	ug/kg
110338	SF-SB-06	2h-pyran-2-one, 5,6-dihydro-	290	ug/kg
110338	SF-SB-06	hexanedionic acid, mono(2-eth	180	ug/kg
110338	SF-SB-06	tridecanoic acid	270	ug/kg
110338	SF-SB-06	hexanedionic acid, mono(2-eth	150	ug/kg
110338	SF-SB-06	hexanedionic acid, mono(2-eth	190	ug/kg
110338	SF-SB-06	hexanedionic acid, dioctyl es	27000	ug/kg
110340	SF-SB-13	2-heptanone, 6-methyl-5-meth	470	ug/kg
110340	SF-SB-13	2,4(1h,3h)-pyrimidinedione	720	ug/kg
110340	SF-SB-13	hexanedionic acid, mono(2-eth	120	ug/kg
110340	SF-SB-13	hexanedionic acid, mono(2-eth	25000	ug/kg
110340	SF-SB-13	benzo-j-fluoranthene	170	ug/kg
110351	SF-SB-02	cyclopentanone, 2,5-dimethyl	230	ug/kg
110351	SF-SB-02	2-heptanone, 6-methyl-5-meth	370	ug/kg
110351	SF-SB-02	2,4(1h,3h)-pyrimidinedione	450	ug/kg
110351	SF-SB-02	2h-1-benzopyran-2-one	1500	ug/kg
110351	SF-SB-02	propanoic acid, 2-methyl-, 1	200	ug/kg
110351	SF-SB-02	tetradecanoic acid	460	ug/kg
110351	SF-SB-02	hexanedionic acid, mono(2-eth	2700	ug/kg
110351	SF-SB-02	(z)14-tricosenyl formate	200	ug/kg
110351	SF-SB-02	ergost-5-en-3-ol, (3.beta.)-	260	ug/kg
110351	SF-SB-02	stigmast-5-en-3-ol, (3.beta.)-	1300	ug/kg
110355	SF-SB-03	2-heptanone, 6-methyl-5-meth	450	ug/kg
110355	SF-SB-03	2,4,6-trimethyl-1-nonene	510	ug/kg
110355	SF-SB-03	tetradecanoic acid	230	ug/kg
110355	SF-SB-03	hexanedionic acid, mono(2-eth	100	ug/kg
110355	SF-SB-03	hexanedionic acid, mono(2-eth	20000	ug/kg
110355	SF-SB-03	(z)14-tricosenyl formate	110	ug/kg
110355	SF-SB-03	octadecane, 9-ethyl-9-heptyl	140	ug/kg
110358	SF-SB-04	7-oxabicyclo 4.1.0 heptane	240	ug/kg
110358	SF-SB-04	propanoic acid, 2-methyl-, 1	130	ug/kg
110358	SF-SB-04	tetradecanoic acid	120	ug/kg
110358	SF-SB-04	hexanedioic acid, dioctyl es	12000	ug/kg
110365	SF-SS-19	hexanedionic acid, mono(2-eth	290	ug/kg
110365	SF-SS-19	tetradecanoic acid	340	ug/kg
110365	SF-SS-19	3-hexene, 2,2,3,4,5,5-hexame	100	ug/kg
110365	SF-SS-19	hexanedioic acid, dioctyl es	140	ug/kg
110365	SF-SS-19	hexanedioic acid, mono(2-eth	21000	ug/kg
110365	SF-SS-19	naphthalene, 1,1'-(1,3-propa	210	ug/kg
110365	SF-SS-19	dotriacontane	210	ug/kg
110365	SF-SS-19	2(1h)-pyridinone, 3-phenylm	140	ug/kg
110365	SF-SS-19	dotriacontane	200	ug/kg
110365	SF-SS-19	dotriacontane	110	ug/kg

TABLE F-3B
SOUTH FIELD
TENTATIVELY IDENTIFIED COMPOUNDS
SURFACE SOIL

Sample Number	Sample Location	Parameter	Result	Units
110287	SF-SS-18	1-hexanol, 2-ethyl-	220	ug/kg
110287	SF-SS-18	propanoic acid, 2-methyl-,	120	ug/kg
110287	SF-SS-18	tetradecanoic acid	210	ug/kg
110287	SF-SS-18	tritetracontane	100	ug/kg
110287	SF-SS-18	11h-benzo-a-fluorene	160	ug/kg
110287	SF-SS-18	tritetracontane	170	ug/kg
110287	SF-SS-18	hexanedioic acid, mono(2-eth	270	ug/kg
110287	SF-SS-18	tritetracontane	310	ug/kg
110287	SF-SS-18	tetratetracontane	300	ug/kg
110287	SF-SS-18	tritetracontane	270	ug/kg
110287	SF-SS-18	tritetracontane	200	ug/kg
110287	SF-SS-18	benzo-j-fluoranthene	180	ug/kg
110287	SF-SS-18	benzo-j-fluoranthene	650	ug/kg
110290	SF-SS-20	1-hexanol, 2-ethyl-	290	ug/kg
110290	SF-SS-20	tetradecanoic acid	370	ug/kg
110290	SF-SS-20	hexanedioic acid, mono(2-eth	7900	ug/kg
110290	SF-SS-20	tritetracontane	230	ug/kg
110290	SF-SS-20	tritetracontane	230	ug/kg
110290	SF-SS-20	tritetracontane	250	ug/kg
110290	SF-SS-20	(z)14-tricosenyl formate	280	ug/kg
110290	SF-SS-20	tritetracontane	470	ug/kg
110290	SF-SS-20	tritetracontane	850	ug/kg
110297	SF-SS-17	11h-benzo-a-fluorene	1000	ug/kg
110297	SF-SS-17	11h-benzo-a-fluorene	490	ug/kg
110297	SF-SS-17	hexanedioic acid, dioctyl es	17000	ug/kg
110297	SF-SS-17	cyclopenta cd pyrene	670	ug/kg
110297	SF-SS-17	3,4-dihydrocyclopenta(cd)pyr	450	ug/kg
110297	SF-SS-17	benzo-j-fluoranthene	990	ug/kg
110297	SF-SS-17	benzo-j-fluoranthene	2300	ug/kg
110297	SF-SS-17	benzo-j-fluoranthene	1400	ug/kg
110307	SF-SS-21	propanoic acid, 2-methyl-,	140	ug/kg
110307	SF-SS-21	tetradecanoic acid	190	ug/kg
110307	SF-SS-21	hexanedioic acid, mono(2-eth	400	ug/kg
110307	SF-SS-21	tritetracontane	140	ug/kg
110307	SF-SS-21	eicosane, 2-methyl-	120	ug/kg
110358	SF-SB-04	silane, fluorotrimethyl-	10	ug/kg
110372	SF-SB-07	methane, thiobis-	8.4	ug/kg
110324	SF-SB-08	cyclopentane, nitro-	270	ug/kg
110324	SF-SB-08	propanoic acid, 2-methyl-,	120	ug/kg
110324	SF-SB-08	hexanedioic acid, dioctyl es	10000	ug/kg
110331	SF-SB-01	2-heptanone, 6-methyl-5-meth	280	ug/kg
110331	SF-SB-01	2,4-(1h,3h)-pyrimidinedione	490	ug/kg
110331	SF-SB-01	pyrazolo 5,1-c-as-triazin-4	280	ug/kg
110331	SF-SB-01	propanoic acid, 2-methyl-,	200	ug/kg
110331	SF-SB-01	hexanedioic acid, dioctyl es	100	ug/kg
110331	SF-SB-01	iron, tricarbonyl n-(phenyl-	8000	ug/kg
110331	SF-SB-01	(z)14-tricosenyl formate	93	ug/kg
110331	SF-SB-01	ergost-5-en-3-ol, (3.beta.)-	170	ug/kg
110331	SF-SB-01	stigmast-5-en-3-ol, (3.beta.)-	200	ug/kg
110335	SF-SB-15	glycene, N,N-dimethyl-, ethy	24000	ug/kg
110335	SF-SB-15	hydroperoxide, 1,1-dimethyle	22000	ug/kg
110335	SF-SB-15	propane, 1-isocyano-	220	ug/kg
110335	SF-SB-15	ethane, 1,1,2,2-tetrachloro-	170	ug/kg

TABLE F-3B
SOUTH FIELD
TENTATIVELY IDENTIFIED COMPOUNDS
SURFACE SOIL

Sample Number	Sample Location	Parameter	Result	Units
110365	SF-SS-19	cyclohexane, 1-(1,5-dimethyl	87	ug/kg
110365	SF-SS-19	lup-20(29)-en-3-ol, (3.beta.	120	ug/kg
110365	SF-SS-19	dotriacontane	400	ug/kg
110365	SF-SS-19	octadecane, 9-ethyl-9-heptyl	94	ug/kg
110365	SF-SS-19	arsenous acid, tris (trimethy	120	ug/kg
110372	SF-SB-07	7-oxabicyclo 4.1.0 heptane	270	ug/kg
110372	SF-SB-07	2,4,6-trimethyl-1-nonene	2800	ug/kg
110372	SF-SB-07	hexanoic acid	160	ug/kg
110372	SF-SB-07	propanoic acid, 2-methyl-, 1	230	ug/kg
110372	SF-SB-07	tetradecanoic acid	510	ug/kg
110372	SF-SB-07	hexanedionic acid, mono(2-eth	1500	ug/kg
110372	SF-SB-07	1-dotriacontanol	160	ug/kg
110372	SF-SB-07	1,3-dioxolane, 4-ethyl-5-oct	140	ug/kg
110372	SF-SB-07	1,3-dioxolane, 4-ethyl-5-oct	600	ug/kg
110372	SF-SB-07	stigmast-5-en-3-ol, (3.beta.)-	900	ug/kg
110372	SF-SB-07	arsenous acid, tris (trimethy	220	ug/kg
110372	SF-SB-07	pregnan-3-one, (5.alpha.)-	140	ug/kg
110385	SF-SB-12	cyclobutanone, 2-methyl-2-ox	200	ug/kg
110385	SF-SB-12	2,4,6-trimethyl-1-nonene	240	ug/kg
110385	SF-SB-12	2h-1-benzopyran-2-one	420	ug/kg
110385	SF-SB-12	tetradecanoic acid	130	ug/kg
110385	SF-SB-12	1-dotriacontanol	110	ug/kg
110385	SF-SB-12	eicosane, 2-methyl	270	ug/kg

TABLE F-4

SOUTH FIELD
CIS SURFACE SOIL RADIOLOGICAL RESULTS
OPERABLE UNIT 2 REMEDIAL INVESTIGATION
FERNALD ENVIRONMENTAL MANAGEMENT PROJECT

FEMP ID #		SL24206			SS24212			SL24049			SL24197		
Depth		2-6"			2-6"			6-12"			2-6"		
Date		02/27/87			04/29/87			04/17/87			04/23/87		
	Isotope	Activity (pCi/g)	Uncertainty	Validation Qualifier	Activity (pCi/g)	Uncertainty	Validation Qualifier	Activity (pCi/g)	Uncertainty	Validation Qualifier	Activity (pCi/g)	Uncertainty	Validation Qualifier
	Uranium-234	8.98	±0.48	J	115	±1.72		78.9	±1.45		98.4	±2.39	
	Uranium-235	0.31	±0.09	J	5.53	±0.38		3.62	±0.31		3.80	±0.47	
	Uranium-238	9.54	±0.50	U	129	±1.82		82.7	±1.48	J	102	±2.44	
	Thorium-228	1.71	±0.53		1.47	±0.42	J	0.28	±0.11	J	1.75	±1.20	R
	Thorium-230	17.5	±1.41		31.8	±1.79	J	399	±3.77	J	14.8	±7.62	R
	Thorium-232	1.54	±0.46	U	1.32	±0.37	U	0.49	±0.13	J	2.33	±1.10	R
	Plutonium-238	0.13	NA[a]	U	0.14	NA	U	0.13	NA	U	0.13	NA	U
	Plutonium-239/240	0.03	NA	U	0.06	NA	U	0.07	±0.05	J	0.08	±0.04	J
	Ruthenium-106	2.70	NA	U	2.01	NA	U	1.67	NA	U	1.69	NA	U
	Cesium-137	0.48	±0.77	J	0.26	NA	U	2.81	±0.90	J	2.24	±0.48	J
	Technetium-99	1.40	NA	U	1.5	NA	U	1.10	NA	U	1.1	NA	U
	Strontium-90	0.24	NA	U	0.32	NA	U	0.15	NA	U	0.63	±0.26	
	Neptunium-237	0.41	NA	U	0.09	NA	U	0.13	NA	U	0.04	NA	U

See footnote at end of table

0598
5174

TABLE F-4
(Continued)

FEMP ID #		SL24121			SL24255			SS24046			SS24081		
Depth		2-6"			6-12"			0-2"			0-2"		
Date		04/27/87			04/22/87			04/17/87			04/20/87		
	Isotope	Activity (pCi/g)	Uncertainty	Validation Qualifier	Activity (pCi/g)	Uncertainity	Validation Qualifier	Activity (pCi/g)	Uncertainty	Validation Qualifier	Activity (pCi/g)	Uncertainty	Validation Qualifier
	Uranium-234	13.6	±0.57	J	8.32	±0.47	J	15.1	±0.56	J	2851	±38.8	
	Uranium-235	0.62	±0.12	J	0.35	±0.09	J	0.63	±0.11	J	356	±13.7	
	Uranium-238	14.8	±0.59	J	8.54	±0.47	U	16.2	±0.58	J	2940	±39.4	
	Thorium-228	0.74	±0.32	J	0.62	±0.30	J	0.51	±0.11	J	0.85	±0.22	J
	Thorium-230	83.5	±3.09	U	18.2	±1.38	U	310	±2.66	J	77.1	±1.96	U
	Thorium-232	0.69	±0.28	J	0.39	±0.21	J	1.00	±0.15	J	0.45	±0.15	J
	Plutonium-238	0.23	NA	U	0.09	NA	U	0.09	NA	U	0.07	NA	U
	Plutonium-239/240	0.16	NA	U	0.04	NA	U	0.03	NA	U	0.02	NA	U
	Ruthenium-106	31.9	±7.78	J	2.12	NA	U	1.90	NA	U	23.8	±23.5	J
	Cesium-137	0.29	NA	U	0.25	NA	U	0.61	±0.35	J	4.38	±2.52	J
	Technetium-99	1.2	NA	U	1.20	NA	U	1.2	NA	U	1.3	NA	U
	Strontium-90	0.27	NA	U	0.23	NA	U	0.26	NA	U	0.12	NA	U
	Neptunium-237	0.05	NA	U	0.04	NA	U	0.04	NA	U	0.04	NA	U

See footnote at end of table

TABLE F-4
(Continued)

FEMP ID #		SS24196			SS24183			SL24116			SL24262		
Depth		0-2"			0-2"			2-6"			6-12"		
Date		04/23/87			04/24/87			04/27/87			04/22/87		
	Isotope	Activity (pCi/g)	Uncertainty	Validation Qualifier	Activity (pCi/g)	Uncertainity	Validation Qualifier	Activity (pCi/g)	Uncertainty	Validation Qualifier	Activity (pCi/g)	Uncertainty	Validation Qualifier
	Uranium-234	105	±1.64		12.3	±0.59	U	14.3	±0.47	U	48.6	±0.99	J
	Uranium-235	4.38	±0.34		0.68	±0.14	U	0.67	±0.11	U	2.39	±0.22	J
	Uranium-238	108	±1.66		11.2	±0.57	U	14.2	±0.47	U	56.7	±1.07	J
	Thorium-228	0.62	±0.21	J	34.3	±2.19		0.19	±0.13	J	0.27	±0.07	J
	Thorium-230	21.2	±1.08	U	10.7	±1.25		12.1	±0.78		12.1	±0.44	J
	Thorium-232	0.53	±0.19	J	36.5	±2.26		0.18	±0.09		0.18	±0.05	J
	Plutonium-238	0.07	NA	U	0.06	±0.07	J	0.18	NA	U	0.26	NA	U
	Plutonium-239/240	0.08	NA	U	0.06	NA	U	0.04	NA	U	0.10	NA	U
	Ruthenium-106	1.92	NA	U	5.74	±3.41		14.4	±6.57		1.88	NA	U
	Cesium-137	1.02	±0.49	J	0.69	±0.39		2.04	±0.89		0.37	±0.70	J
	Technetium-99	1.2	NA	U	1.50	NA	U	1.20	NA	U	1.20	NA	U
	Strontium-90	0.22	NA	U	0.27	NA	U	0.31	NA	U	0.25	NA	U
	Neptunium-237	0.04	NA	U	0.04	NA	U	0.02	NA	U	0.04	NA	U

0600

See footnote at end of table

5174

TABLE F-4
(Continued)

FEMP ID #	SS24189			SL24192			SL24199			SS24151		
Depth	0-2"			2-6"			2-6"			0-2"		
Date	04/24/87			04/23/87			04/23/87			04/21/87		
Isotope	Activity (pCi/g)	Uncertainty	Validation Qualifier	Activity (pCi/g)	Uncertainty	Validation Qualifier	Activity (pCi/g)	Uncertainty	Validation Qualifier	Activity (pCi/g)	Uncertainty	Validation Qualifier
Uranium-234	4.73	±0.32	J	18.9	±0.75	J	6.31	±0.37	U	8.50	±0.40	U
Uranium-235	0.27	±0.08	J	1.07	±0.18	J	0.27	±0.08	U	0.39	±0.09	U
Uranium-238	7.49	±0.45	U	17.7	±0.73	J	5.92	±0.36	U	9.21	±0.42	U
Thorium-228	0.15	±0.07	U	0.24	±0.07	J	0.16	±0.09	J	0.17	NA	U
Thorium-230	0.15	±0.07	U	3.56	±0.26	J	2.92	±0.28	J	2.31	±0.28	J
Thorium-232	0.04	±0.03	J	0.11	±0.05	J	0.06	NA	U	0.12	NA	U
Plutonium-238	0.15	NA	U	0.44	NA	U	0.16	NA	U	0.02	NA	U
Plutonium-239/240	0.05	NA	U	0.11	NA	U	0.04	NA	U	0.02	NA	U
Ruthenium=106	2.49	±3.37		3.84	±5.00		5.62	±2.88		3.94	±3.29	J
Cesium-137	2.39	±0.70		0.54	±0.52	J	0.37	±0.37	J	0.24	NA	U
Technetium-99	1.20	NA	U	1.30	NA	U	1.30	NA	U	2.10	NA	U
Strontium-90	0.34	NA	U	0.42	NA	U	0.35	NA	U	0.27	NA	U
Neptunium-237	0.04	NA	U	0.03	NA	U	0.04	NA	U	0.03	NA	U

See footnote at end of table

0501

TABLE F-4
(Continued)

FEMP ID #		SL24117			SL24113			SS24123			SS24142		
Depth		6-12"			2-6"			0-2"			0-2"		
Date		04/27/87			04/27/87			04/23/87			04/28/87		
	Isotope	Activity (pCi/g)	Uncertainty	Validation Qualifier	Activity (pCi/g)	Uncertainity	Validation Qualifier	Activity (pCi/g)	Uncertainty	Validation Qualifier	Activity (pCi/g)	Uncertainty	Validation Qualifier
	Uranium-234	46.0	±0.95	J	26.5	±0.83		7.21	±0.38	U	99.2	±1.48	J
	Uranium-235	1.97	±0.20	J	1.59	±0.20	J	0.30	±0.08	U	4.17	±0.30	J
	Uranium-238	57.8	±1.07	J	21.9	±0.75	J	7.48	±0.39	U	94.1	±1.44	J
	Thorium-228	0.39	±0.24	J	0.13	±0.08	J	0.30	±0.08	J	4.80	±0.79	J
	Thorium-230	0.88	±0.29	J	14.2	±0.81	J	9.29	±0.45		1.16	±0.48	J
	Thorium-232	0.21	NA	U	0.52	±0.17	J	0.22	±0.07		5.33	±0.80	J
	Plutonium-238	0.48	NA	U	0.62	NA	U	0.15	NA	R	0.27	NA	U
	Plutonium-239/240	0.25	NA	U	0.24	NA	U	0.15	NA	R	0.05	NA	U
	Ruthenium-106	1.73	±2.54	U	6.35	±4.28		9.98	±5.74		7.86	±4.90	
	Cesium-137	0.15	±0.26	U	1.74	±0.67		1.38	±0.72		1.03	±0.52	
	Technetium-99	1.20	NA	U	1.20	NA	U	1.40	NA	U	1.40	NA	U
	Strontium-90	0.23	NA	U	0.26	NA	U	0.24	NA	U	0.21	NA	U
	Neptunium-237	0.03	NA	U	0.03	NA	U	0.03	NA	U	0.03	NA	U

See footnote at end of table

TABLE F-4
(Continued)

FEMP ID #	SS24133			SS24235			SS24221			SL24236		
Depth	0-2"			0-2"			0-2"			2-5"		
Date	05/12/87			04/22/87			04/29/87			04/22/87		
Isotope	Activity (pCi/g)	Uncertainty	Validation Qualifier	Activity (pCi/g)	Uncertainity	Validation Qualifier	Activity (pCi/g)	Uncertainty	Validation Qualifier	Activity (pCi/g)	Uncertainty	Validation Qualifier
Uranium-234	491	±10.3		44.4	±0.89	J	117	±1.67	J	74.0	±2.16	J
Uranium-235	20.1	±2.04		1.86	±0.18	J	4.85	±0.34	J	3.23	±0.45	J
Uranium-238	500	±10.1		42.4	±0.87	J	124	±1.71	J	68.9	±2.09	J
Thorium-228	1.03	±0.10	J	41.2	±4.29	J	1.87	±0.20	J	7.95	±0.047	J
Thorium-230	35.7	±1.08	J	103	±6.80	J	7.05	±0.37	J	28.7	±0.89	J
Thorium-232	1.04	±0.19	J	44.2	±4.49	J	2.43	±0.22	J	10.0	±0.53	J
Plutonium-238	0.09	NA	U	0.10	NA	U	0.14	NA	U	0.15	NA	R
Plutonium-239/240	0.05	NA	U	0.02	NA	U	0.14	NA	U	0.15	NA	R
Ruthenium-106	1.95	NA	U	2.29	±3.34	J	2.09	NA	U	1.98	NA	U
Cesium-137	0.25	NA	U	0.28	NA	U	0.27	NA	U	0.61	±0.36	
Technetium-99	1.2	NA	U	1.30	NA	U	4.0	NA	U	1.30	NA	U
Strontium-90	0.23	NA	U	0.24	NA	U	0.28	NA	U	0.29	NA	U
Neptunium-237	0.03	NA	U	0.04	NA	U	0.02	NA	U	0.03	NA	U

See footnote at end of table

0503

TABLE F-4
(Continued)

FEMP ID #		SL24094			SL24179			SL24052		
Depth		0-6"			12-18"			6-12"		
Date		05/12/87			05/12/87			04/17/87		
	Isotope	Activity (pCi/g)	Uncertainty	Validation Qualifier	Activity (pCi/g)	Uncertainity	Validation Qualifier	Activity (pCi/g)	Uncertainity	Validation Qualifier
	Uranium-234	4.16	±0.35	J	31.2	±0.78		28.0	±1.0	
	Uranium-235	0.19	±0.08	J	1.36	±0.16	J	1.2	±0.20	
	Uranium-238	5.43	±0.40	U	29.1	±0.75	J	29.0	±1.0	
	Thorium-228	0.51	±0.16		129	±4.31	J	3.0	±0.70	
	Thorium-230	20.7	±0.86		21.4	±1.76	J	23330.0	±20.0	
	Thorium-232	0.51	±0.15		130	±4.33	J	4.50	±0.70	
	Plutonium-238	0.19	NA	U	0.13	NA	U	0.10	NA	U
	Plutonium-239/240	0.03	NA	U	0.10	NA	U	0.10	NA	U
	Ruthenium-106	3.81	±4.27	J	11.9	±5.56	J	3.00	NA	U
	Cesium-137	0.27	NA	U	0.27	NA	U	0.50	NA	U
	Technetium-99	1.2	NA	U	1.2	NA	U	0.40	NA	U
	Strontium-90	0.32	NA	U	0.37	NA	U	0.60	NA	U
	Neptunium-237	0.08	NA	U	0.13	NA	U	0.10	NA	U

[a]Not Applicable

0504

5174

TABLE F-5

SOUTH FIELD
SURFACE MEDIA ANALYSES ENVIRONMENTAL SURVEY
OPERABLE UNIT 2 REMEDIAL INVESTIGATION
FERNALD ENVIRONMENTAL MANAGEMENT PROJECT

Analyte	FE0108SS	FE0109SS	FE0110SS	FE0112SS	FE0115SS
Asbestos	ND	ND	ND	ND	ND
RADIONUCLIDES (pCi/g)					
Bismuth-214	1.2±0.1	0.75±0.11	3.0±0.1	0.87±0.05	0.92±0.08
Cesium-137	0.74±0.07	0.46±0.07	I	0.08±0.02	0.24±0.03
Radium-226	1.2±0.1G	0.77±0.08G	3.0±0.2G	0.87±0.10G	0.85±0.06G
Thorium-228	1.5±0.2G	1.3±0.2G	2.6±0.1G	0.92±0.05G	1.1±0.1G
Thorium-232	1.3±0.2G	1.2±0.2G	2.7±0.1G	0.84±0.06G	1.1±0.1G
Uranium-235	N	N	N	0.3±0.02	0.79±0.03
Uranium-238	53±8	37±8	N	7.8±2.3	29±6
Total Uranium (mg/kg)	8.8	57.0	7.4	16.0	58
TCLP METALS (mg/L)					
Arsenic	<0.1	<0.5	<0.1	<0.5	<0.1
Barium	0.58 B	0.42 B	0.49 B	0.45 B	0.55 B
Cadmium	<0.02	<0.02	<0.02	<0.02	<0.02
Chromium	<0.03	<0.03	<0.03	<0.03	<0.03
Lead	<0.3	<0.3	<0.3	<0.3	<0.3
Mercury	<0.001	<0.001	<0.001	<0.001	<0.001
Selenium	<0.5	<0.5	<0.5	<0.5	<0.5
Silver	<0.1	<0.1	<0.1	<0.1	<0.1
VOLATILE ORGANIC COMPOUNDS (µg/kg)					
1,1-Dichloroethane	<0.005	<5	<0.005	<5	<0.005
1,1,1-Trichloroethane	<0.005	<5	<0.005	<5	<0.005
1,1,2-Trichloroethane	<0.005	<5	<0.005	<5	<0.005
1,1,2,2-Tetrachloroethane	<0.005	<5	<0.005	<5	<0.005
1,2-Dichloroethane	<0.005	<5	<0.005	<5	<0.005
1,2-Dichloroprophane	<0.005	<5	<0.005	<5	<0.005
2-Hexanone	<0.01	<10	<0.01	<10	<0.01
2-Butanone	0.003 BJ	<10	0.035	10 B	0.004 BJ
2-Chloroethylvinyl ether	<0.01	<10	<0.01	<10	<0.01
4-Methyl-2-pentanone	<0.01	<10	<0.01	<10	<0.01
Acetone	0.007 BJ	<10	0.180 Z5	120 Z5	0.016 B
Benzene	<0.005	<5	<0.005	<5	<0.005
Bromodichloromethane	<0.005	<5	<0.005	<5	<0.005
Bromoform	<0.005	<5	<0.005	<5	<0.005

0605

See notes at end of table

TABLE F-5
(Continued)

Analyte	FE0108SS	FE0109SS	FE0110SS	FE0112SS	FE0115SS
VOLATILE ORGANIC COMPOUNDS (µg/kg) (Continued)					
Bromomethane	<10	<10	<10	<10	<10
Carbon tetrachloride	<0.005	<5	<0.005	<5	<0.005
Carbon disulfide	<0.005	<5	<0.005	<5	<0.005
Chlorobenzene	<5	<5	<5	<5	<5
Chloroethane	<10	<10	<10	<10	<10
Chloroform	<5	<5	10	4 BJ	3 BJ
Chloromethane	<10	<10	<10	<10	<10
Cis-1,3-dichloropropene	<5	<5	<5	<5	<5
Dibromochloromethane	<5	<5	<5	<5	<5
Ethyl benzene	<5	<5	<5	<5	<5
Methylene chloride	32	18 B	280 Z5	84 Z5	51
Styrene	<5	<5	<5	<5	<5
Tetrachloroethene	<5	<5	<5	<5	<5
Toluene	7 B	4 BJ	26	13 BJ	4 BJ
Total xylenes	<5	<5	<5	<5	<5
Trans-1,2-dichloroethene	<5	<5	<5	<5	<5
Trans-1,3-dichloropropene	<5	<5	<5	<5	<5
Trichloroethene	<5	<5	<5	<5	<5
Vinyl acetate	<10	<10	<10	<10	<10
Vinyl chloride	<10	<10	<10	<10	<10
PCBs (mg/kg)					
Aroclor-1242	NA	NA	NA	NA	NA
Aroclor-1248	NA	NA	NA	NA	NA
Aroclor-1254	NA	NA	NA	NA	NA
Aroclor-1260	NA	NA	NA	NA	NA

ND = None Detected
Z5 = The samples exhibited low internal standard recovery due to the retention properties of the matrix. The reported detection limits are for soil samples and should not be used as the minimum attainable limits
G = Gamma Spectroscopy Analysis
N = Nuclide not identified by GAMANAL analysis as being present in the sample; no value reported
I = Nuclide identified by GAMANAL analysis of sample spectrum, but values did not exceed room background at the 95% confidence level; no value reported
B = Analyte was found in the blank as well as the sample
J = Estimated value of compound present but less than the specified detection limit
NA = Not analyzed

TABLE F-6A

SOUTH FIELD
RI/FS SUBSURFACE SOIL RESULTS
OPERABLE UNIT 2 REMEDIAL INVESTIGATION
FERNALD ENVIRONMENTAL MANAGEMENT PROJECT

PHASE I - RADIOLOGICAL PARAMETERS

BORING NUMBER	1014			1046			1046		
SAMPLE NUMBER	007354			008014			008024		
	1.5 - 3			0 - 1.5			15 - 16.5		
SAMPLING DATE	10/17/87			02/06/88			02/08/88		
RADIOLOGICAL PARAMETERS	RESULTS	UNITS	VQ	RESULTS	UNITS	VQ	RESULTS	UNITS	VQ
CS-137	0.200	pci/g	UJ	0.200	pci/g	UJ	0.200	pci/g	UJ
NP-237	0.600	pci/g	UJ	0.600	pci/g	U	0.600	pci/g	U
PU-238	0.600	pci/g	U	0.600	pci/g	U	0.600	pci/g	U
PU-239/240	0.600	pci/g	U	0.600	pci/g	U	0.600	pci/g	U
RA-226	1.000	pci/g	J	1.300	pci/g	J	0.300	pci/g	UJ
RA-228	0.900	pci/g	J	1.300	pci/g	J	0.500	pci/g	J
RU-106	1.000	pci/g	UJ	1.000	pci/g	UJ	1.000	pci/g	UJ
SR-90	0.500	pci/g	U	0.500	pci/g	U	0.500	pci/g	U
TC-99	0.900	pci/g	U	2.800	pci/g	R	2.400	pci/g	R
TH-228	0.800	pci/g	-	1.100	pci/g	-	0.500	pci/g	U
TH-230	2.000	pci/g	-	1.300	pci/g	-	1.000	pci/g	J
TH-232	0.800	pci/g	-	0.800	pci/g	-	0.600	pci/g	U
U-234	1.400	pci/g	-	1.700	pci/g	-	0.600	pci/g	J
U-235/236	0.600	pci/g	U	0.600	pci/g	U	0.600	pci/g	U
U-238	1.400	pci/g	-	2.100	pci/g	-	0.700	pci/g	-

0607

- 5174

TABLE F-6A
(Continued)

PHASE I - RADIOLOGICAL PARAMETERS

BORING NUMBER	1046			1407			1407		
SAMPLE NUMBER	008025			098000			098001		
	15 - 16.5			0 - 0.5			0.5 - 1		
SAMPLING DATE	02/08/88			05/16/89			05/16/89		
RADIOLOGICAL PARAMETERS	RESULTS	UNITS	VQ	RESULTS	UNITS	VQ	RESULTS	UNITS	VQ
CS-137	0.200	pci/g	UJ	NA			NA		
NP-237	0.600	pci/g	U	NA			NA		
PU-238	0.600	pci/g	U	NA			NA		
PU-239/240	0.600	pci/g	U	NA			NA		
RA-226	0.600	pci/g	J	NA			NA		
RA-228	0.500	pci/g	UJ	NA			NA		
RU-106	1.000	pci/g	UJ	NA			NA		
SR-90	0.500	pci/g	U	NA			NA		
TC-99	3.300	pci/g	R	NA			NA		
TH-228	0.600	pci/g	U	NA			NA		
TH-230	0.800	pci/g	J	NA			NA		
TH-232	0.600	pci/g	U	NA			NA		
U-234	0.600	pci/g	U	NA			NA		
U-235/236	0.600	pci/g	U	NA			NA		
U-238	0.600	pci/g	U	NA			NA		
U-TOTAL	NA			3.000	mg/kg	R	6.000	mg/kg	-

TABLE F-6A
(Continued)

PHASE I - RADIOLOGICAL PARAMETERS

BORING NUMBER	1407			1407			1407		
SAMPLE NUMBER	098002			098003			098004		
	1.5 - 2			3 - 3.5			4.5 - 5		
SAMPLING DATE	05/16/89			05/16/89			05/16/89		
RADIOLOGICAL PARAMETERS	RESULTS	UNITS	VQ	RESULTS	UNITS	VQ	RESULTS	UNITS	VQ
U-TOTAL	5.000	mg/kg	-	3.000	mg/kg	-	4.000	mg/kg	-

0609

5174

TABLE F-6A
(Continued)

PHASE I - RADIOLOGICAL PARAMETERS

BORING NUMBER	1407			1407			1407		
SAMPLE NUMBER	098006			098008			098009		
	6 - 6.5			7.5 - 8			8 - 8.5		
SAMPLING DATE	05/16/89			05/16/89			05/16/89		
RADIOLOGICAL PARAMETERS	RESULTS	UNITS	VQ	RESULTS	UNITS	VQ	RESULTS	UNITS	VQ
U-TOTAL	3.000	mg/kg	R	5.000	mg/kg	-	1.000	mg/kg	-

TABLE F-6A
(Continued)

PHASE I - RADIOLOGICAL PARAMETERS

BORING NUMBER	1433			1455			1455		
SAMPLE NUMBER	047019			055900			055901		
	2 - 5			0 - 3			0 - 3.75		
SAMPLING DATE	07/29/92			11/04/89			11/04/89		
RADIOLOGICAL PARAMETERS	RESULTS	UNITS	VQ	RESULTS	UNITS	VQ	RESULTS	UNITS	VQ
CS-137	0.200	pci/g	U	0.200	pci/g	UJ	0.200	pci/g	UJ
GROSS ALPHA	168.000	pci/g	NV	NA			NA		
GROSS BETA	96.000	pci/g	NV	NA			NA		
NP-237	0.600	pci/g	UJ	0.600	pci/g	U	0.600	pci/g	U
PU-238	0.600	pci/g	UJ	0.600	pci/g	UJ	0.600	pci/g	UJ
PU-239/240	0.600	pci/g	UJ	0.600	pci/g	U	0.600	pci/g	U
RA-226	7.670	pci/g	-	5.930	pci/g	J	1.300	pci/g	J
RA-228	19.000	pci/g	-	1.270	pci/g	J	1.580	pci/g	J
RU-106	1.500	pci/g	U	1.000	pci/g	UJ	1.000	pci/g	UJ
SR-90	1.910	pci/g	-	0.500	pci/g	R	0.500	pci/g	R
TC-99	0.900	pci/g	UJ	0.900	pci/g	R	0.900	pci/g	R
TH-228	20.300	pci/g	J	1.520	pci/g	J	1.420	pci/g	J
TH-230	5.860	pci/g	J	10.300	pci/g	J	2.120	pci/g	J
TH-232	17.500	pci/g	J	1.290	pci/g	-	1.190	pci/g	-
TH-TOTAL	158.000	ug/g	J	11.600	ug/g	-	10.700	ug/g	-
U-234	41.200	pci/g	J	12.600	pci/g	-	2.440	pci/g	-
U-235/236	2.240	pci/g	J	0.748	pci/g	-	0.600	pci/g	U
U-238	41.300	pci/g	J	14.600	pci/g	-	3.100	pci/g	-
U-TOTAL	128.000	mg/kg	-	42.600	mg/kg	J	10.300	mg/kg	J

0514

5174

TABLE F-6A
(Continued)

PHASE I - RADIOLOGICAL PARAMETERS

BORING NUMBER	1456			1456			1457		
SAMPLE NUMBER	055902			055903			055904		
	0 - 3.75			0 - 4.25			0 - 3.75		
SAMPLING DATE	11/04/89			11/04/89			11/04/89		
RADIOLOGICAL PARAMETERS	RESULTS	UNITS	VQ	RESULTS	UNITS	VQ	RESULTS	UNITS	VQ
CS-137	0.200	pci/g	UJ	0.200	pci/g	UJ	0.200	pci/g	UJ
NP-237	0.600	pci/g	U	0.600	pci/g	U	0.600	pci/g	U
PU-238	0.600	pci/g	UJ	0.600	pci/g	UJ	0.600	pci/g	UJ
PU-239/240	1.230	pci/g	-	0.600	pci/g	U	0.600	pci/g	U
RA-226	0.940	pci/g	J	1.180	pci/g	J	15.700	pci/g	J
RA-228	0.900	pci/g	J	1.300	pci/g	J	2.460	pci/g	J
RU-106	1.000	pci/g	UJ	1.000	pci/g	UJ	1.000	pci/g	UJ
SR-90	0.500	pci/g	U	0.500	pci/g	U	0.500	pci/g	U
TC-99	0.900	pci/g	R	0.900	pci/g	R	0.900	pci/g	R
TH-228	1.070	pci/g	J	1.250	pci/g	J	2.630	pci/g	J
TH-230	1.370	pci/g	J	1.780	pci/g	J	57.300	pci/g	J
TH-232	1.030	pci/g	-	1.050	pci/g	-	3.440	pci/g	-
TH-TOTAL	9.330	ug/g	-	9.440	ug/g	-	31.000	ug/g	-
U-234	9.360	pci/g	-	22.100	pci/g	-	26.400	pci/g	-
U-235/236	0.665	pci/g	-	1.120	pci/g	-	1.660	pci/g	-
U-238	10.600	pci/g	-	22.600	pci/g	-	28.100	pci/g	-
U-TOTAL	27.700	mg/kg	J	74.400	mg/kg	R	71.400	mg/kg	J

TABLE F-6A
(Continued)

PHASE I - RADIOLOGICAL PARAMETERS

BORING NUMBER	1457			1458			1458		
SAMPLE NUMBER	055905			055913			055914		
	0 - 4.25			0 - 4			0 - 4.5		
SAMPLING DATE	11/04/89			11/06/89			11/06/89		
RADIOLOGICAL PARAMETERS	RESULTS	UNITS	VQ	RESULTS	UNITS	VQ	RESULTS	UNITS	VQ
CS-137	0.200	pci/g	UJ	0.200	pci/g	UJ	0.200	pci/g	UJ
NP-237	0.600	pci/g	U	0.600	pci/g	UJ	0.600	pci/g	UJ
PU-238	0.600	pci/g	UJ	0.600	pci/g	UJ	0.600	pci/g	UJ
PU-239/240	0.600	pci/g	U	0.600	pci/g	U	0.600	pci/g	U
RA-226	1.440	pci/g	J	1.480	pci/g	J	1.410	pci/g	J
RA-228	1.560	pci/g	J	0.500	pci/g	R	1.950	pci/g	J
RU-106	1.000	pci/g	UJ	1.000	pci/g	UJ	1.000	pci/g	UJ
SR-90	0.500	pci/g	U	0.500	pci/g	R	0.500	pci/g	U
TC-99	0.900	pci/g	R	0.900	pci/g	R	0.900	pci/g	R
TH-228	1.300	pci/g	J	1.780	pci/g	J	2.060	pci/g	J
TH-230	2.160	pci/g	J	3.180	pci/g	J	4.410	pci/g	J
TH-232	1.290	pci/g	-	1.740	pci/g	-	1.870	pci/g	-
TH-TOTAL	11.600	ug/g	-	15.700	ug/g	-	16.900	ug/g	-
U-234	4.060	pci/g	-	24.200	pci/g	-	22.400	pci/g	-
U-235/236	0.600	pci/g	U	1.580	pci/g	-	1.180	pci/g	-
U-238	4.410	pci/g	-	23.700	pci/g	-	23.600	pci/g	-
U-TOTAL	11.900	mg/kg	J	76.100	mg/kg	J	59.800	mg/kg	J

TABLE F-6A
(Continued)

PHASE I - RADIOLOGICAL PARAMETERS

BORING NUMBER	1459			1459			1460		
SAMPLE NUMBER	055915			055916			055917		
	0 - 5			0 - 6			0 - 3.5		
SAMPLING DATE	11/06/89			11/06/89			11/06/89		
RADIOLOGICAL PARAMETERS	RESULTS	UNITS	VQ	RESULTS	UNITS	VQ	RESULTS	UNITS	VQ
CS-137	0.200	pci/g	UJ	0.200	pci/g	UJ	0.200	pci/g	UJ
NP-237	0.600	pci/g	UJ	0.600	pci/g	UJ	0.600	pci/g	UJ
PU-238	0.600	pci/g	UJ	0.600	pci/g	UJ	0.600	pci/g	UJ
PU-239/240	0.600	pci/g	U	0.600	pci/g	U	0.600	pci/g	U
RA-226	1.600	pci/g	J	1.310	pci/g	J	1.060	pci/g	J
RA-228	1.370	pci/g	J	1.250	pci/g	J	0.940	pci/g	J
RU-106	1.000	pci/g	UJ	1.000	pci/g	UJ	1.000	pci/g	UJ
SR-90	0.500	pci/g	R	0.500	pci/g	U	0.500	pci/g	U
TC-99	0.900	pci/g	R	0.900	pci/g	R	0.900	pci/g	R
TH-228	1.520	pci/g	J	1.620	pci/g	J	1.280	pci/g	J
TH-230	1.560	pci/g	J	2.160	pci/g	J	1.730	pci/g	J
TH-232	1.310	pci/g	-	1.330	pci/g	-	0.959	pci/g	-
TH-TOTAL	11.800	ug/g	-	12.000	ug/g	-	8.650	ug/g	-
U-234	78.300	pci/g	-	57.200	pci/g	-	119.000	pci/g	-
U-235/236	4.050	pci/g	-	2.730	pci/g	-	20.600	pci/g	-
U-238	82.700	pci/g	-	60.800	pci/g	-	131.000	pci/g	-
U-TOTAL	228.000	mg/kg	J	189.000	mg/kg	J	394.000	mg/kg	J

TABLE F-6A
(Continued)

PHASE I - RADIOLOGICAL PARAMETERS

BORING NUMBER	1460			1461			1461		
SAMPLE NUMBER	055918			055926			055927		
	0 - 4.25			0 - 4			0 - 5		
SAMPLING DATE	11/06/89			11/07/89			11/07/89		
RADIOLOGICAL PARAMETERS	RESULTS	UNITS	VQ	RESULTS	UNITS	VQ	RESULTS	UNITS	VQ
CS-137	0.200	pci/g	UJ	0.200	pci/g	UJ	0.200	pci/g	UJ
NP-237	0.600	pci/g	UJ	0.600	pci/g	R	0.600	pci/g	R
PU-238	0.600	pci/g	UJ	0.600	pci/g	UJ	0.600	pci/g	UJ
PU-239/240	0.600	pci/g	U	0.600	pci/g	U	0.600	pci/g	U
RA-226	1.150	pci/g	J	1.230	pci/g	J	1.650	pci/g	J
RA-228	0.850	pci/g	J	1.060	pci/g	J	1.410	pci/g	J
RU-106	1.000	pci/g	UJ	1.000	pci/g	UJ	1.000	pci/g	UJ
SR-90	0.500	pci/g	U	0.500	pci/g	R	0.500	pci/g	R
TC-99	0.900	pci/g	R	0.900	pci/g	R	0.900	pci/g	R
TH-228	1.260	pci/g	J	1.270	pci/g	J	1.720	pci/g	J
TH-230	3.220	pci/g	J	4.120	pci/g	J	2.130	pci/g	J
TH-232	1.120	pci/g	-	1.050	pci/g	-	1.400	pci/g	-
TH-TOTAL	10.100	ug/g	-	9.460	ug/g	-	12.600	ug/g	-
U-234	75.700	pci/g	-	4.730	pci/g	-	1.490	pci/g	-
U-235/236	3.770	pci/g	-	0.600	pci/g	UJ	0.600	pci/g	UJ
U-238	78.800	pci/g	-	5.580	pci/g	-	1.420	pci/g	-
U-TOTAL	230.000	mg/kg	J	19.100	mg/kg	J	5.170	mg/kg	J

0615

5174

TABLE F-6A
(Continued)

PHASE I - RADIOLOGICAL PARAMETERS

BORING NUMBER	1462			1462			1463		
SAMPLE NUMBER	055928			055929			055930		
	0 - 4			0 - 5			0 - 3.5		
SAMPLING DATE	11/07/89			11/07/89			11/07/89		
RADIOLOGICAL PARAMETERS	RESULTS	UNITS	VQ	RESULTS	UNITS	VQ	RESULTS	UNITS	VQ
CS-137	0.200	pci/g	UJ	0.200	pci/g	UJ	0.200	pci/g	U
NP-237	0.600	pci/g	R	0.600	pci/g	R	0.600	pci/g	R
PU-238	0.600	pci/g	UJ	0.600	pci/g	UJ	0.600	pci/g	UJ
PU-239/240	0.600	pci/g	U	0.600	pci/g	U	0.600	pci/g	U
RA-226	1.300	pci/g	J	1.380	pci/g	J	0.940	pci/g	-
RA-228	0.810	pci/g	J	1.370	pci/g	J	0.730	pci/g	-
RU-106	1.000	pci/g	UJ	1.000	pci/g	UJ	1.000	pci/g	U
SR-90	0.500	pci/g	U	0.500	pci/g	U	0.500	pci/g	U
TC-99	0.900	pci/g	R	0.900	pci/g	R	0.900	pci/g	R
TH-228	0.982	pci/g	J	1.270	pci/g	J	5.320	pci/g	J
TH-230	3.330	pci/g	J	2.060	pci/g	J	4.390	pci/g	J
TH-232	1.050	pci/g	-	1.270	pci/g	-	0.734	pci/g	-
TH-TOTAL	9.450	ug/g	-	11.500	ug/g	-	6.620	ug/g	-
U-234	5.040	pci/g	-	4.710	pci/g	-	19.700	pci/g	-
U-235/236	0.600	pci/g	UJ	0.600	pci/g	UJ	2.550	pci/g	J
U-238	6.210	pci/g	-	4.700	pci/g	-	61.400	pci/g	-
U-TOTAL	19.400	mg/kg	J	14.800	mg/kg	J	121.000	mg/kg	-

TABLE F-6A
(Continued)

PHASE I - RADIOLOGICAL PARAMETERS

BORING NUMBER	1463			1464			1464		
SAMPLE NUMBER	055931			055939			055940		
	0 - 4.5			0 - 3.75			0 - 4.5		
SAMPLING DATE	11/07/89			11/08/89			11/08/89		
RADIOLOGICAL PARAMETERS	RESULTS	UNITS	VQ	RESULTS	UNITS	VQ	RESULTS	UNITS	VQ
CS-137	0.200	pci/g	UJ	0.200	pci/g	R	0.200	pci/g	UJ
NP-237	0.600	pci/g	R	0.600	pci/g	UJ	0.600	pci/g	UJ
PU-238	0.600	pci/g	UJ	0.600	pci/g	UJ	0.600	pci/g	UJ
PU-239/240	0.600	pci/g	U	0.600	pci/g	U	0.600	pci/g	U
RA-226	1.510	pci/g	J	1.180	pci/g	R	1.440	pci/g	J
RA-228	1.260	pci/g	J	0.950	pci/g	R	1.260	pci/g	J
RU-106	1.000	pci/g	UJ	1.000	pci/g	R	1.000	pci/g	UJ
SR-90	0.500	pci/g	U	0.500	pci/g	UJ	0.500	pci/g	UJ
TC-99	0.900	pci/g	R	0.900	pci/g	R	0.900	pci/g	R
TH-228	1.220	pci/g	J	0.983	pci/g	J	1.480	pci/g	J
TH-230	2.010	pci/g	J	1.460	pci/g	J	1.820	pci/g	J
TH-232	1.160	pci/g	-	0.833	pci/g	-	1.230	pci/g	-
TH-TOTAL	10.400	ug/g	-	7.510	ug/g	-	11.100	ug/g	-
U-234	1.150	pci/g	-	1.080	pci/g	-	1.960	pci/g	-
U-235/236	0.600	pci/g	UJ	0.600	pci/g	UJ	0.600	pci/g	UJ
U-238	1.460	pci/g	-	1.370	pci/g	-	1.760	pci/g	-
U-TOTAL	5.520	mg/kg	J	10.800	mg/kg	R	5.030	mg/kg	J

0517

TABLE F-6A
(Continued)

PHASE I - RADIOLOGICAL PARAMETERS

BORING NUMBER	1465			1465			1466		
SAMPLE NUMBER	055941			055942			055943		
	0 - 3.5			0 - 4.5			0 - 3		
SAMPLING DATE	11/08/89			11/08/89			11/08/89		
RADIOLOGICAL PARAMETERS	RESULTS	UNITS	VQ	RESULTS	UNITS	VQ	RESULTS	UNITS	VQ
CS-137	0.200	pci/g	R	0.200	pci/g	UJ	0.200	pci/g	R
NP-237	0.600	pci/g	UJ	0.600	pci/g	UJ	0.600	pci/g	UJ
PU-238	0.600	pci/g	UJ	0.600	pci/g	UJ	0.600	pci/g	UJ
PU-239/240	0.600	pci/g	U	0.600	pci/g	U	0.600	pci/g	U
RA-226	1.070	pci/g	R	1.300	pci/g	J	0.790	pci/g	R
RA-228	0.800	pci/g	R	1.310	pci/g	J	0.500	pci/g	R
RU-106	1.000	pci/g	R	1.000	pci/g	UJ	1.000	pci/g	R
SR-90	0.500	pci/g	U	0.500	pci/g	U	0.500	pci/g	U
TC-99	0.900	pci/g	R	0.900	pci/g	R	0.900	pci/g	R
TH-228	1.120	pci/g	J	1.220	pci/g	J	0.824	pci/g	J
TH-230	1.300	pci/g	J	1.410	pci/g	J	1.300	pci/g	J
TH-232	0.969	pci/g	-	0.856	pci/g	-	0.840	pci/g	-
TH-TOTAL	8.750	ug/g	-	7.730	ug/g	-	7.580	ug/g	-
U-234	1.680	pci/g	-	3.270	pci/g	-	1.130	pci/g	-
U-235/236	0.757	pci/g	J	0.600	pci/g	UJ	0.600	pci/g	UJ
U-238	1.090	pci/g	-	3.500	pci/g	-	1.260	pci/g	-
U-TOTAL	7.330	mg/kg	R	4.260	mg/kg	J	10.600	mg/kg	R

0618

TABLE F-6A
(Continued)

PHASE I - RADIOLOGICAL PARAMETERS

BORING NUMBER	1466			1467			1467		
SAMPLE NUMBER	055944			055952			055953		
	0 - 4.5			0 - 2.5			0 - 3.5		
SAMPLING DATE	11/08/89			11/14/89			11/14/89		
RADIOLOGICAL PARAMETERS	RESULTS	UNITS	VQ	RESULTS	UNITS	VQ	RESULTS	UNITS	VQ
CS-137	0.200	pci/g	UJ	0.200	pci/g	U	0.200	pci/g	U
NP-237	0.600	pci/g	UJ	0.600	pci/g	UJ	0.600	pci/g	UJ
PU-238	0.600	pci/g	UJ	0.600	pci/g	UJ	0.600	pci/g	UJ
PU-239/240	0.600	pci/g	U	0.600	pci/g	UJ	0.600	pci/g	UJ
RA-226	1.560	pci/g	J	0.304	pci/g	U	1.560	pci/g	-
RA-228	1.460	pci/g	J	1.050	pci/g	-	1.350	pci/g	-
RU-106	1.000	pci/g	UJ	1.000	pci/g	U	1.000	pci/g	U
SR-90	0.920	pci/g	-	0.500	pci/g	U	0.500	pci/g	U
TC-99	0.900	pci/g	R	0.900	pci/g	R	0.900	pci/g	R
TH-228	1.350	pci/g	J	0.983	pci/g	J	1.120	pci/g	J
TH-230	1.440	pci/g	J	1.700	pci/g	J	1.990	pci/g	J
TH-232	1.140	pci/g	-	0.703	pci/g	J	1.180	pci/g	J
TH-TOTAL	10.300	ug/g	-	6.350	ug/g	J	10.600	ug/g	J
U-234	4.710	pci/g	-	3.820	pci/g	J	0.965	pci/g	J
U-235/236	0.600	pci/g	UJ	0.600	pci/g	UJ	0.600	pci/g	UJ
U-238	5.360	pci/g	-	4.140	pci/g	J	1.320	pci/g	J
U-TOTAL	4.720	mg/kg	J	11.380	mg/kg	-	8.590	mg/kg	-

0519
5174

TABLE F-6A
(Continued)

PHASE I - RADIOLOGICAL PARAMETERS

BORING NUMBER	1468			1468			1469		
SAMPLE NUMBER	055954			055955			055956		
	0 - 2.5			0 - 3.5			0 - 2.5		
SAMPLING DATE	11/14/89			11/14/89			11/14/89		
RADIOLOGICAL PARAMETERS	RESULTS	UNITS	VQ	RESULTS	UNITS	VQ	RESULTS	UNITS	VQ
CS-137	0.200	pci/g	UJ	0.200	pci/g	UJ	0.200	pci/g	UJ
NP-237	0.600	pci/g	UJ	0.600	pci/g	UJ	0.600	pci/g	UJ
PU-238	0.600	pci/g	UJ	0.600	pci/g	UJ	0.600	pci/g	UJ
PU-239/240	0.600	pci/g	UJ	0.600	pci/g	UJ	0.600	pci/g	UJ
RA-226	0.940	pci/g	J	1.580	pci/g	J	0.900	pci/g	DJ
RA-228	0.900	pci/g	J	0.540	pci/g	UJ	0.740	pci/g	DJ
RU-106	1.000	pci/g	UJ	1.000	pci/g	UJ	1.000	pci/g	UJ
SR-90	0.500	pci/g	R	0.500	pci/g	R	0.500	pci/g	U
TC-99	0.900	pci/g	R	0.900	pci/g	R	0.900	pci/g	R
TH-228	0.909	pci/g	J	1.190	pci/g	J	0.877	pci/g	J
TH-230	1.610	pci/g	J	1.820	pci/g	J	1.200	pci/g	J
TH-232	0.773	pci/g	J	1.130	pci/g	J	0.600	pci/g	UJ
TH-TOTAL	6.970	ug/g	J	10.200	ug/g	J	4.880	ug/g	J
U-234	3.420	pci/g	J	1.310	pci/g	J	2.590	pci/g	J
U-235/236	0.600	pci/g	UJ	0.600	pci/g	UJ	0.600	pci/g	UJ
U-238	3.560	pci/g	J	1.320	pci/g	J	3.180	pci/g	J
U-TOTAL	12.260	mg/kg	J	4.500	mg/kg	UJ	10.890	mg/kg	J

0520

TABLE F-6A
(Continued)

PHASE I - RADIOLOGICAL PARAMETERS

BORING NUMBER	1469			1470			1470		
SAMPLE NUMBER	055957			055966			055967		
	0 - 3.5			0 - 3			0 - 4		
SAMPLING DATE	11/14/89			11/15/89			11/15/89		
RADIOLOGICAL PARAMETERS	RESULTS	UNITS	VQ	RESULTS	UNITS	VQ	RESULTS	UNITS	VQ
CS-137	0.200	pci/g	UJ	0.200	pci/g	R	0.200	pci/g	R
NP-237	0.600	pci/g	UJ	0.600	pci/g	UJ	0.600	pci/g	UJ
PU-238	0.600	pci/g	UJ	0.600	pci/g	U	0.600	pci/g	U
PU-239/240	0.600	pci/g	UJ	0.600	pci/g	U	0.600	pci/g	U
RA-226	1.270	pci/g	J	1.180	pci/g	R	0.315	pci/g	R
RA-228	1.390	pci/g	J	0.897	pci/g	R	0.967	pci/g	R
RU-106	1.000	pci/g	UJ	1.000	pci/g	R	1.000	pci/g	R
SR-90	0.500	pci/g	U	0.500	pci/g	U	0.660	pci/g	J
TC-99	0.900	pci/g	R	0.900	pci/g	U	0.900	pci/g	-
TH-228	0.954	pci/g	J	1.100	pci/g	-	1.050	pci/g	-
TH-230	1.190	pci/g	J	1.940	pci/g	-	1.630	pci/g	-
TH-232	0.885	pci/g	J	1.080	pci/g	-	0.903	pci/g	-
TH-TOTAL	7.990	ug/g	J	9.700	ug/g	-	8.150	ug/g	-
U-234	1.140	pci/g	J	3.790	pci/g	-	1.510	pci/g	-
U-235/236	0.600	pci/g	UJ	0.600	pci/g	U	0.600	pci/g	U
U-238	1.380	pci/g	J	4.040	pci/g	-	1.610	pci/g	-
U-TOTAL	4.960	mg/kg	J	11.600	mg/kg	-	5.060	mg/kg	-

0521

5174

TABLE F-6A
(Continued)

PHASE I - RADIOLOGICAL PARAMETERS

BORING NUMBER	1471			1471			1472		
SAMPLE NUMBER	055968			055969			055970		
	0 - 4			0 - 5.5			0 - 4		
SAMPLING DATE	11/16/89			11/16/89			11/16/89		
RADIOLOGICAL PARAMETERS	RESULTS	UNITS	VQ	RESULTS	UNITS	VQ	RESULTS	UNITS	VQ
CS-137	0.200	pci/g	U	0.200	pci/g	U	0.200	pci/g	U
NP-237	0.600	pci/g	UJ	0.600	pci/g	UJ	0.600	pci/g	UJ
PU-238	0.600	pci/g	U	0.600	pci/g	U	0.600	pci/g	U
PU-239/240	0.600	pci/g	U	0.600	pci/g	U	0.600	pci/g	U
RA-226	1.240	pci/g	-	0.300	pci/g	U	1.330	pci/g	-
RA-228	0.994	pci/g	-	1.090	pci/g	-	0.961	pci/g	-
RU-106	1.000	pci/g	U	1.000	pci/g	U	1.000	pci/g	U
SR-90	0.500	pci/g	U	0.500	pci/g	-	0.500	pci/g	R
TC-99	0.900	pci/g	-	0.900	pci/g	U	0.900	pci/g	U
TH-228	0.874	pci/g	-	1.240	pci/g	-	0,999	pci/g	-
TH-230	1.220	pci/g	-	1.900	pci/g	-	2.860	pci/g	-
TH-232	0.850	pci/g	-	1.000	pci/g	-	0.895	pci/g	-
TH-TOTAL	7.670	ug/g	-	9.050	ug/g	-	8.080	ug/g	-
U-234	1.520	pci/g	-	1.040	pci/g	-	3.460	pci/g	-
U-235/236	0.600	pci/g	U	0.600	pci/g	U	0.600	pci/g	U
U-238	2.120	pci/g	-	1.350	pci/g	-	3.640	pci/g	-
U-TOTAL	6.890	mg/kg	-	5.240	mg/kg	-	10.200	mg/kg	-

0622

TABLE F-6A
(Continued)

PHASE I - RADIOLOGICAL PARAMETERS

BORING NUMBER	1472			1473			1473		
SAMPLE NUMBER	055971			055979			055980		
	0 - 5			0 - 3.5			0 - 5		
SAMPLING DATE	11/16/89			11/17/89			11/17/89		
RADIOLOGICAL PARAMETERS	RESULTS	UNITS	VQ	RESULTS	UNITS	VQ	RESULTS	UNITS	VQ
CS-137	0.200	pci/g	R	0.200	pci/g	UJ	0.200	pci/g	R
NP-237	0.600	pci/g	UJ	0.600	pci/g	UJ	0.600	pci/g	UJ
PU-238	0.600	pci/g	U	0.600	pci/g	U	0.600	pci/g	U
PU-239/240	0.600	pci/g	U	0.600	pci/g	U	0.600	pci/g	U
RA-226	1.060	pci/g	R	0.300	pci/g	UJ	0.771	pci/g	R
RA-228	1.090	pci/g	R	1.070	pci/g	J	0.770	pci/g	R
RU-106	1.000	pci/g	R	1.000	pci/g	UJ	1.000	pci/g	R
SR-90	1.100	pci/g	J	0.500	pci/g	R	653.000	pci/g	R
TC-99	0.900	pci/g	U	0.900	pci/g	UJ	0.900	pci/g	UJ
TH-228	1.070	pci/g	-	1.470	pci/g	-	0.893	pci/g	-
TH-230	1.650	pci/g	-	1.870	pci/g	-	0.600	pci/g	U
TH-232	1.050	pci/g	-	0.912	pci/g	-	0.600	pci/g	U
TH-TOTAL	9.490	ug/g	-	8.230	ug/g	-	5.000	ug/g	-
U-234	2.130	pci/g	-	1.680	pci/g	J	0.673	pci/g	J
U-235/236	0.600	pci/g	U	0.600	pci/g	UJ	0.600	pci/g	UJ
U-238	2.060	pci/g	-	1.860	pci/g	J	0.923	pci/g	J
U-TOTAL	9.900	mg/kg	-	7.020	mg/kg	J	2.150	mg/kg	R

0523

5174

5174

TABLE F-6A
(Continued)

PHASE I - RADIOLOGICAL PARAMETERS

BORING NUMBER	1473			1474			1474		
SAMPLE NUMBER	055981			055982			055983		
	0 - 10			0 - 3.5			0 - 5		
SAMPLING DATE	11/17/89			11/17/89			11/17/89		
RADIOLOGICAL PARAMETERS	RESULTS	UNITS	VQ	RESULTS	UNITS	VQ	RESULTS	UNITS	VQ
CS-137	0.200	pci/g	R	0.200	pci/g	U	0.200	pci/g	U
NP-237	0.600	pci/g	UJ	0.600	pci/g	UJ	0.600	pci/g	UJ
PU-238	0.600	pci/g	U	0.600	pci/g	U	0.600	pci/g	U
PU-239/240	0.600	pci/g	U	0.600	pci/g	U	0.600	pci/g	U
RA-226	1.030	pci/g	R	1.220	pci/g	-	0.926	pci/g	-
RA-228	0.948	pci/g	R	1.070	pci/g	-	0.975	pci/g	-
RU-106	1.000	pci/g	R	1.000	pci/g	U	1.000	pci/g	U
SR-90	0.500	pci/g	R	0.600	pci/g	R	0.500	pci/g	R
TC-99	0.900	pci/g	UJ	0.900	pci/g	UJ	0.900	pci/g	UJ
TH-228	0.719	pci/g	-	1.060	pci/g	-	0.962	pci/g	-
TH-230	0.600	pci/g	U	0.600	pci/g	U	1.290	pci/g	-
TH-232	0.600	pci/g	U	0.883	pci/g	-	0.793	pci/g	-
TH-TOTAL	4.930	ug/g	-	7.970	ug/g	-	7.150	ug/g	-
U-234	1.150	pci/g	J	1.790	pci/g	J	0.887	pci/g	J
U-235/236	0.600	pci/g	UJ	0.600	pci/g	UJ	0.600	pci/g	UJ
U-238	1.050	pci/g	J	1.890	pci/g	J	1.070	pci/g	J
U-TOTAL	4.000	mg/kg	R	9.920	mg/kg	-	3.090	mg/kg	-

0624

TABLE F-6A
(Continued)

PHASE I - RADIOLOGICAL PARAMETERS

BORING NUMBER	1474			1475			1475		
SAMPLE NUMBER	055984			055985			055986		
	0 - 10			0 - 3.75			0 - 5		
SAMPLING DATE	11/17/89			11/17/89			11/17/89		
RADIOLOGICAL PARAMETERS	RESULTS	UNITS	VQ	RESULTS	UNITS	VQ	RESULTS	UNITS	VQ
CS-137	0.200	pci/g	R	0.200	pci/g	U	0.200	pci/g	U
NP-237	0.600	pci/g	UJ	0.600	pci/g	UJ	0.600	pci/g	UJ
PU-238	0.600	pci/g	UJ	0.600	pci/g	U	0.600	pci/g	U
PU-239/240	0.600	pci/g	UJ	0.600	pci/g	U	0.600	pci/g	U
RA-226	1.050	pci/g	R	0.300	pci/g	U	1.080	pci/g	-
RA-228	0.846	pci/g	R	0.645	pci/g	-	1.190	pci/g	-
RU-106	1.000	pci/g	R	1.000	pci/g	U	1.000	pci/g	U
SR-90	0.500	pci/g	R	0.650	pci/g	R	2.500	pci/g	R
TC-99	0.900	pci/g	UJ	0.900	pci/g	UJ	0.900	pci/g	UJ
TH-228	0.901	pci/g	-	1.080	pci/g	-	1.170	pci/g	-
TH-230	1.210	pci/g	-	2.840	pci/g	-	2.160	pci/g	-
TH-232	0.678	pci/g	-	0.921	pci/g	-	1.080	pci/g	-
TH-TOTAL	6.150	ug/g	-	8.310	ug/g	-	9.720	ug/g	-
U-234	1.500	pci/g	J	1.850	pci/g	J	1.030	pci/g	J
U-235/236	0.600	pci/g	UJ	0.600	pci/g	UJ	0.600	pci/g	UJ
U-238	1.380	pci/g	J	2.100	pci/g	J	1.010	pci/g	J
U-TOTAL	4.540	mg/kg	R	8.280	mg/kg	-	3.290	mg/kg	-

0625

5174

TABLE F-6A
(Continued)

PHASE I - RADIOLOGICAL PARAMETERS

BORING NUMBER	1475			1516			1516		
SAMPLE NUMBER	055987			055371			055373		
	0 - 10			0 - 0.5			1 - 1.5		
SAMPLING DATE	11/17/89			05/19/90			05/19/90		
RADIOLOGICAL PARAMETERS	RESULTS	UNITS	VQ	RESULTS	UNITS	VQ	RESULTS	UNITS	VQ
CS-137	0.200	pci/g	R	0.248	pci/g	R	0.200	pci/g	R
NP-237	0.600	pci/g	UJ	0.600	pci/g	J	0.600	pci/g	J
PU-238	0.600	pci/g	U	0.600	pci/g	J	0.600	pci/g	J
PU-239/240	0.600	pci/g	U	0.600	pci/g	J	0.600	pci/g	J
RA-226	0.886	pci/g	R	1.350	pci/g	R	0.300	pci/g	R
RA-228	0.673	pci/g	R	0.858	pci/g	R	0.500	pci/g	R
RU-106	1.000	pci/g	R	1.000	pci/g	R	1.000	pci/g	R
SR-90	0.500	pci/g	R	0.500	pci/g	-	0.500	pci/g	-
TC-99	0.900	pci/g	UJ	0.900	pci/g	J	0.900	pci/g	J
TH-228	0.902	pci/g	-	1.010	pci/g	-	0.600	pci/g	-
TH-230	1.680	pci/g	-	5.590	pci/g	-	3.070	pci/g	-
TH-232	0.872	pci/g	-	1.110	pci/g	-	0.600	pci/g	-
TH-TOTAL	7.870	ug/g	-	10.000	ug/g	-	5.000	ug/g	-
U-234	1.040	pci/g	J	4.640	pci/g	J	2.640	pci/g	J
U-235/236	0.600	pci/g	UJ	0.600	pci/g	J	0.600	pci/g	J
U-238	1.050	pci/g	J	7.000	pci/g	J	2.720	pci/g	J
U-TOTAL	2.280	mg/kg	R	26.400	mg/kg	R	12.900	mg/kg	R

TABLE F-6A
(Continued)

PHASE I - RADIOLOGICAL PARAMETERS

BORING NUMBER	1516			1516			1516		
SAMPLE NUMBER	055375			055377			055379		
	2 - 2.5			3 - 3.5			4 - 4.5		
SAMPLING DATE	05/19/90			05/19/90			05/19/90		
RADIOLOGICAL PARAMETERS	RESULTS	UNITS	VQ	RESULTS	UNITS	VQ	RESULTS	UNITS	VQ
CS-137	0.200	pci/g	R	0.200	pci/g	J	0.200	pci/g	R
NP-237	0.600	pci/g	J	0.600	pci/g	J	0.600	pci/g	J
PU-238	0.600	pci/g	J	0.600	pci/g	J	0.600	pci/g	J
PU-239/240	0.600	pci/g	J	0.600	pci/g	J	0.600	pci/g	J
RA-226	0.300	pci/g	R	0.496	pci/g	J	0.622	pci/g	R
RA-228	0.500	pci/g	R	0.500	pci/g	J	0.500	pci/g	R
RU-106	1.000	pci/g	R	1.000	pci/g	J	1.000	pci/g	R
SR-90	0.500	pci/g	-	1.220	pci/g	J	0.500	pci/g	-
TC-99	0.900	pci/g	J	0.900	pci/g	J	0.900	pci/g	J
TH-228	0.657	pci/g	-	0.600	pci/g	-	0.600	pci/g	-
TH-230	0.794	pci/g	-	0.811	pci/g	J	1.030	pci/g	J
TH-232	0.600	pci/g	-	0.600	pci/g	-	0.600	pci/g	-
TH-TOTAL	5.000	ug/g	-	5.000	ug/g	-	5.000	ug/g	-
U-234	1.290	pci/g	J	1.240	pci/g	J	1.730	pci/g	J
U-235/236	0.600	pci/g	J	0.600	pci/g	J	0.600	pci/g	J
U-238	1.410	pci/g	J	1.670	pci/g	J	1.930	pci/g	J
U-TOTAL	8.150	mg/kg	R	3.440	mg/kg	J	6.940	mg/kg	R

0627

5174

TABLE F-6A
(Continued)

PHASE I - RADIOLOGICAL PARAMETERS

BORING NUMBER	1516			1516			1516		
SAMPLE NUMBER	055383			055387			055389		
	6 - 6.5			8 - 8.5			9 - 9.5		
SAMPLING DATE	05/19/90			05/19/90			05/19/90		
RADIOLOGICAL PARAMETERS	RESULTS	UNITS	VQ	RESULTS	UNITS	VQ	RESULTS	UNITS	VQ
CS-137	0.200	pci/g	J	0.200	pci/g	R	0.200	pci/g	J
NP-237	0.600	pci/g	J	0.600	pci/g	J	0.600	pci/g	J
PU-238	0.600	pci/g	J	0.600	pci/g	J	0.600	pci/g	J
PU-239/240	0.600	pci/g	J	0.600	pci/g	J	0.600	pci/g	J
RA-226	0.862	pci/g	J	0.487	pci/g	R	0.606	pci/g	J
RA-228	0.500	pci/g	J	0.500	pci/g	R	0.500	pci/g	J
RU-106	1.000	pci/g	J	1.000	pci/g	R	1.000	pci/g	J
SR-90	0.500	pci/g	-	0.500	pci/g	-	0.500	pci/g	-
TC-99	0.900	pci/g	J	0.900	pci/g	J	0.900	pci/g	J
TH-228	0.600	pci/g	-	0.600	pci/g	-	0.600	pci/g	-
TH-230	1.370	pci/g	J	0.662	pci/g	J	0.749	pci/g	J
TH-232	0.600	pci/g	-	0.600	pci/g	-	0.600	pci/g	-
TH-TOTAL	5.000	ug/g	-	5.000	ug/g	-	5.000	ug/g	-
U-234	2.290	pci/g	J	1.500	pci/g	J	1.540	pci/g	J
U-235/236	0.600	pci/g	J	0.600	pci/g	J	0.600	pci/g	J
U-238	2.840	pci/g	J	1.530	pci/g	J	1.910	pci/g	J
U-TOTAL	9.420	mg/kg	J	7.930	mg/kg	R	6.550	mg/kg	J

0938

TABLE F-6A
(Continued)

PHASE I - RADIOLOGICAL PARAMETERS

BORING NUMBER	1516			1516			1516		
SAMPLE NUMBER	055391			055393			055395		
	10 - 10.5			11 - 11.5			12 - 12.5		
SAMPLING DATE	05/19/90			05/19/90			05/19/90		
RADIOLOGICAL PARAMETERS	RESULTS	UNITS	VQ	RESULTS	UNITS	VQ	RESULTS	UNITS	VQ
CS-137	0.200	pci/g	R	0.200	pci/g	J	0.200	pci/g	R
NP-237	0.600	pci/g	J	0.600	pci/g	J	0.600	pci/g	J
PU-238	0.600	pci/g	J	0.600	pci/g	J	0.600	pci/g	J
PU-239/240	0.600	pci/g	J	0.600	pci/g	J	0.600	pci/g	J
RA-226	0.531	pci/g	R	0.405	pci/g	J	0.300	pci/g	R
RA-228	0.500	pci/g	R	0.500	pci/g	J	0.500	pci/g	R
RU-106	1.000	pci/g	R	1.000	pci/g	J	1.000	pci/g	R
SR-90	0.500	pci/g	-	0.500	pci/g	-	0.500	pci/g	-
TC-99	0.900	pci/g	J	0.900	pci/g	J	0.900	pci/g	J
TH-228	0.600	pci/g	-	0.600	pci/g	-	0.600	pci/g	J
TH-230	0.849	pci/g	J	0.600	pci/g	-	0.958	pci/g	J
TH-232	0.600	pci/g	-	0.600	pci/g	-	0.600	pci/g	J
TH-TOTAL	5.000	ug/g	-	5.000	ug/g	-	4.670	ug/g	J
U-234	1.480	pci/g	J	1.650	pci/g	J	1.840	pci/g	J
U-235/236	0.600	pci/g	J	0.600	pci/g	J	0.600	pci/g	J
U-238	1.530	pci/g	J	1.840	pci/g	J	1.960	pci/g	J
U-TOTAL	9.410	mg/kg	R	5.520	mg/kg	J	9.030	mg/kg	R

0629

5174

TABLE F-6A
(Continued)

PHASE I - RADIOLOGICAL PARAMETERS

BORING NUMBER	1516			1516			1516		
SAMPLE NUMBER	055399			055401			055405		
	14 - 14.5			15 - 15.5			17 - 17.5		
SAMPLING DATE	05/19/90			05/19/90			05/19/90		
RADIOLOGICAL PARAMETERS	RESULTS	UNITS	VQ	RESULTS	UNITS	VQ	RESULTS	UNITS	VQ
CS-137	0.200	pci/g	J	0.200	pci/g	R	0.200	pci/g	J
NP-237	0.600	pci/g	J	0.600	pci/g	J	0.600	pci/g	J
PU-238	0.600	pci/g	J	0.600	pci/g	J	0.600	pci/g	J
PU-239/240	0.600	pci/g	J	0.600	pci/g	J	0.600	pci/g	J
RA-226	0.514	pci/g	J	0.300	pci/g	R	0.539	pci/g	J
RA-228	0.500	pci/g	J	0.500	pci/g	R	0.500	pci/g	J
RU-106	1.000	pci/g	J	1.000	pci/g	R	1.000	pci/g	J
SR-90	0.500	pci/g	-	0.500	pci/g	-	0.500	pci/g	-
TC-99	0.900	pci/g	J	0.900	pci/g	J	0.900	pci/g	J
TH-228	0.726	pci/g	J	0.743	pci/g	J	0.600	pci/g	J
TH-230	1.230	pci/g	J	1.610	pci/g	J	0.779	pci/g	J
TH-232	0.600	pci/g	J	0.600	pci/g	J	0.600	pci/g	J
TH-TOTAL	4.410	ug/g	J	4.750	ug/g	J	1.680	ug/g	J
U-234	2.270	pci/g	J	1.630	pci/g	J	0.954	pci/g	J
U-235/236	0.600	pci/g	J	0.600	pci/g	J	0.600	pci/g	J
U-238	2.600	pci/g	J	1.800	pci/g	J	0.848	pci/g	J
U-TOTAL	6.660	mg/kg	J	8.600	mg/kg	R	2.640	mg/kg	J

TABLE F-6A
(Continued)

PHASE I - RADIOLOGICAL PARAMETERS

BORING NUMBER	1516			1516			1517		
SAMPLE NUMBER	055407			055409			055413		
	18 - 18.5			19 - 19.5			0 - 0.5		
SAMPLING DATE	05/19/90			05/19/90			05/20/90		
RADIOLOGICAL PARAMETERS	RESULTS	UNITS	VQ	RESULTS	UNITS	VQ	RESULTS	UNITS	VQ
CS-137	0.200	pci/g	R	0.200	pci/g	R	0.200	pci/g	J
NP-237	0.600	pci/g	J	0.600	pci/g	J	0.600	pci/g	J
PU-238	0.600	pci/g	J	0.600	pci/g	J	0.600	pci/g	J
PU-239/240	0.600	pci/g	J	0.600	pci/g	J	0.600	pci/g	J
RA-226	0.594	pci/g	R	0.300	pci/g	R	0.559	pci/g	J
RA-228	0.500	pci/g	R	0.500	pci/g	R	0.500	pci/g	J
RU-106	1.000	pci/g	R	1.000	pci/g	R	1.000	pci/g	J
SR-90	0.500	pci/g	J	0.500	pci/g	-	0.500	pci/g	-
TC-99	0.900	pci/g	J	0.900	pci/g	J	0.900	pci/g	J
TH-228	0.600	pci/g	J	0.600	pci/g	J	0.600	pci/g	-
TH-230	0.705	pci/g	J	0.904	pci/g	J	1.110	pci/g	-
TH-232	0.600	pci/g	J	0.600	pci/g	J	0.600	pci/g	-
TH-TOTAL	1.760	ug/g	J	1.940	ug/g	J	5.000	ug/g	-
U-234	2.300	pci/g	J	0.600	pci/g	J	1.090	pci/g	J
U-235/236	0.600	pci/g	J	0.600	pci/g	J	0.600	pci/g	J
U-238	2.740	pci/g	J	0.600	pci/g	J	1.450	pci/g	J
U-TOTAL	6.330	mg/kg	R	6.760	mg/kg	R	2.950	mg/kg	J

0631

5174

TABLE F-6A
(Continued)

PHASE I - RADIOLOGICAL PARAMETERS

BORING NUMBER	1517			1517			1517		
SAMPLE NUMBER	055416			055419			055422		
	1.5 - 2			3 - 3.5			4.5 - 5		
SAMPLING DATE	05/20/90			05/20/90			05/20/90		
RADIOLOGICAL PARAMETERS	RESULTS	UNITS	VQ	RESULTS	UNITS	VQ	RESULTS	UNITS	VQ
CS-137	0.200	pci/g	R	0.200	pci/g	R	0.200	pci/g	R
NP-237	0.600	pci/g	J	0.600	pci/g	J	0.600	pci/g	J
PU-238	0.600	pci/g	J	0.600	pci/g	J	0.600	pci/g	J
PU-239/240	0.600	pci/g	J	0.600	pci/g	J	0.600	pci/g	J
RA-226	0.700	pci/g	R	1.760	pci/g	R	0.300	pci/g	R
RA-228	0.610	pci/g	R	0.800	pci/g	R	0.500	pci/g	R
RU-106	1.000	pci/g	R	1.100	pci/g	R	1.000	pci/g	R
SR-90	0.500	pci/g	J	0.500	pci/g	-	0.500	pci/g	-
TC-99	0.900	pci/g	J	0.900	pci/g	J	0.900	pci/g	J
TH-228	0.600	pci/g	-	0.600	pci/g	-	0.600	pci/g	-
TH-230	0.812	pci/g	-	0.852	pci/g	-	0.672	pci/g	-
TH-232	0.600	pci/g	-	0.600	pci/g	-	0.600	pci/g	-
TH-TOTAL	5.000	ug/g	-	5.000	ug/g	-	5.000	ug/g	-
U-234	0.984	pci/g	J	0.600	pci/g	J	0.600	pci/g	J
U-235/236	0.600	pci/g	J	0.600	pci/g	J	0.600	pci/g	J
U-238	0.842	pci/g	J	0.600	pci/g	J	0.600	pci/g	J
U-TOTAL	5.830	mg/kg	R	5.890	mg/kg	R	5.050	mg/kg	R

0632

TABLE F-6A
(Continued)

PHASE I - RADIOLOGICAL PARAMETERS

BORING NUMBER	1517			1517			1517		
SAMPLE NUMBER	055425			055427			055429		
	6 - 6.5			7 - 7.5			8 - 8.5		
SAMPLING DATE	05/20/90			05/20/90			05/20/90		
RADIOLOGICAL PARAMETERS	RESULTS	UNITS	VQ	RESULTS	UNITS	VQ	RESULTS	UNITS	VQ
CS-137	0.200	pci/g	J	0.200	pci/g	J	0.200	pci/g	J
NP-237	0.600	pci/g	J	0.600	pci/g	J	0.600	pci/g	J
PU-238	0.600	pci/g	J	0.600	pci/g	J	0.600	pci/g	J
PU-239/240	0.600	pci/g	J	0.600	pci/g	J	0.600	pci/g	J
RA-226	0.450	pci/g	J	0.480	pci/g	J	0.390	pci/g	J
RA-228	0.500	pci/g	J	0.500	pci/g	J	0.500	pci/g	J
RU-106	1.000	pci/g	J	1.000	pci/g	J	1.000	pci/g	J
SR-90	0.500	pci/g	-	0.500	pci/g	-	0.500	pci/g	-
TC-99	0.900	pci/g	J	0.900	pci/g	J	0.900	pci/g	J
TH-228	0.600	pci/g	-	0.600	pci/g	-	0.600	pci/g	-
TH-230	0.691	pci/g	-	0.606	pci/g	-	0.913	pci/g	-
TH-232	0.600	pci/g	-	0.600	pci/g	-	0.600	pci/g	-
TH-TOTAL	5.000	ug/g	-	5.000	ug/g	-	5.000	ug/g	-
U-234	0.600	pci/g	J	0.600	pci/g	J	1.430	pci/g	J
U-235/236	0.600	pci/g	J	0.600	pci/g	J	0.600	pci/g	J
U-238	0.604	pci/g	J	0.600	pci/g	J	0.600	pci/g	J
U-TOTAL	1.810	mg/kg	J	1.210	mg/kg	J	1.170	mg/kg	J

0633

5174

TABLE F-6A
(Continued)

PHASE I - RADIOLOGICAL PARAMETERS

BORING NUMBER	1517			1517			1517		
SAMPLE NUMBER	055431			055433			055437		
	9 - 9.5			10 - 10.5			12 - 12.5		
SAMPLING DATE	05/20/90			05/20/90			05/20/90		
RADIOLOGICAL PARAMETERS	RESULTS	UNITS	VQ	RESULTS	UNITS	VQ	RESULTS	UNITS	VQ
CS-137	0.200	pci/g	J	0.200	pci/g	J	0.200	pci/g	R
NP-237	0.600	pci/g	J	0.600	pci/g	J	0.600	pci/g	J
PU-238	0.600	pci/g	J	0.600	pci/g	J	0.600	pci/g	J
PU-239/240	0.600	pci/g	J	0.600	pci/g	J	0.600	pci/g	J
RA-226	0.560	pci/g	J	0.520	pci/g	J	0.530	pci/g	R
RA-228	0.500	pci/g	J	0.500	pci/g	J	0.500	pci/g	R
RU-106	1.000	pci/g	J	1.000	pci/g	J	1.000	pci/g	R
SR-90	0.500	pci/g	-	0.737	pci/g	J	0.500	pci/g	-
TC-99	0.900	pci/g	J	0.900	pci/g	J	0.900	pci/g	J
TH-228	0.600	pci/g	-	0.600	pci/g	-	0.600	pci/g	-
TH-230	0.668	pci/g	-	0.600	pci/g	-	2.020	pci/g	-
TH-232	0.600	pci/g	-	0.600	pci/g	-	0.600	pci/g	-
TH-TOTAL	5.000	ug/g	-	5.000	ug/g	-	5.000	ug/g	-
U-234	0.600	pci/g	J	0.801	pci/g	J	0.600	pci/g	J
U-235/236	0.600	pci/g	J	0.600	pci/g	J	0.600	pci/g	J
U-238	0.624	pci/g	J	0.600	pci/g	J	0.600	pci/g	J
U-TOTAL	1.850	mg/kg	J	1.520	mg/kg	J	5.950	mg/kg	R

0634

TABLE F-6A
(Continued)

PHASE I - RADIOLOGICAL PARAMETERS

BORING NUMBER	1517			1517			1517		
SAMPLE NUMBER	055440			055443			055446		
	13.5 - 14			15 - 15.5			16.5 - 17		
SAMPLING DATE	05/20/90			05/20/90			05/20/90		
RADIOLOGICAL PARAMETERS	RESULTS	UNITS	VQ	RESULTS	UNITS	VQ	RESULTS	UNITS	VQ
CS-137	0.200	pci/g	J	0.200	pci/g	J	0.200	pci/g	R
NP-237	0.600	pci/g	J	0.600	pci/g	J	0.600	pci/g	J
PU-238	0.600	pci/g	J	0.600	pci/g	J	0.600	pci/g	J
PU-239/240	0.600	pci/g	J	0.600	pci/g	J	0.600	pci/g	J
RA-226	0.410	pci/g	J	0.440	pci/g	J	0.460	pci/g	R
RA-228	0.500	pci/g	J	0.500	pci/g	J	0.500	pci/g	R
RU-106	1.000	pci/g	J	1.000	pci/g	J	1.000	pci/g	R
SR-90	0.500	pci/g	J	0.500	pci/g	-	0.500	pci/g	-
TC-99	0.900	pci/g	J	0.900	pci/g	J	0.900	pci/g	J
TH-228	0.600	pci/g	-	0.600	pci/g	-	1.930	pci/g	-
TH-230	0.600	pci/g	-	0.600	pci/g	-	0.600	pci/g	-
TH-232	0.600	pci/g	-	0.600	pci/g	-	0.600	pci/g	-
TH-TOTAL	5.000	ug/g	-	5.000	ug/g	-	5.000	ug/g	-
U-234	0.600	pci/g	J	0.600	pci/g	J	0.600	pci/g	J
U-235/236	0.600	pci/g	J	0.600	pci/g	J	0.600	pci/g	J
U-238	0.600	pci/g	J	0.600	pci/g	J	0.625	pci/g	J
U-TOTAL	1.440	mg/kg	J	1.780	mg/kg	J	5.250	mg/kg	R

TABLE F-6A
(Continued)

PHASE I - RADIOLOGICAL PARAMETERS

BORING NUMBER	1517			1517			1518		
SAMPLE NUMBER	055449			055451			055454		
	18 - 18.5			19 - 19.5			0 - 0.5		
SAMPLING DATE	05/20/90			05/20/90			05/22/90		
RADIOLOGICAL PARAMETERS	RESULTS	UNITS	VQ	RESULTS	UNITS	VQ	RESULTS	UNITS	VQ
CS-137	0.200	pci/g	J	0.200	pci/g	R	0.200	pci/g	R
NP-237	0.600	pci/g	J	0.600	pci/g	J	0.600	pci/g	J
PU-238	0.600	pci/g	J	0.600	pci/g	J	0.600	pci/g	J
PU-239/240	0.600	pci/g	J	0.600	pci/g	J	0.600	pci/g	J
RA-226	0.523	pci/g	J	0.582	pci/g	R	0.300	pci/g	R
RA-228	0.500	pci/g	J	0.500	pci/g	R	0.500	pci/g	R
RU-106	1.000	pci/g	J	1.000	pci/g	R	1.000	pci/g	R
SR-90	0.500	pci/g	-	0.500	pci/g	-	0.500	pci/g	-
TC-99	0.900	pci/g	J	0.900	pci/g	J	0.900	pci/g	J
TH-228	0.600	pci/g	-	0.600	pci/g	-	1.230	pci/g	J
TH-230	0.863	pci/g	-	0.965	pci/g	-	1.630	pci/g	J
TH-232	0.600	pci/g	-	0.600	pci/g	-	0.632	pci/g	J
TH-TOTAL	5.000	ug/g	-	5.000	ug/g	-	5.700	ug/g	J
U-234	0.600	pci/g	J	0.600	pci/g	J	1.200	pci/g	J
U-235/236	0.600	pci/g	J	0.600	pci/g	J	0.600	pci/g	J
U-238	0.600	pci/g	J	0.600	pci/g	J	1.240	pci/g	J
U-TOTAL	1.540	mg/kg	J	5.640	mg/kg	R	6.170	mg/kg	R

0536

TABLE F-6A
(Continued)

PHASE I - RADIOLOGICAL PARAMETERS

BORING NUMBER	1518			1518			1518		
SAMPLE NUMBER	055456			055458			055460		
	1 - 1.5			2 - 2.5			3 - 3.5		
SAMPLING DATE	05/22/90			05/22/90			05/22/90		
RADIOLOGICAL PARAMETERS	RESULTS	UNITS	VQ	RESULTS	UNITS	VQ	RESULTS	UNITS	VQ
CS-137	0.200	pci/g	J	0.200	pci/g	R	0.200	pci/g	R
NP-237	0.600	pci/g	J	0.600	pci/g	J	0.600	pci/g	J
PU-238	0.600	pci/g	J	0.600	pci/g	J	0.600	pci/g	J
PU-239/240	0.600	pci/g	J	0.600	pci/g	J	0.600	pci/g	J
RA-226	0.670	pci/g	J	0.461	pci/g	R	0.300	pci/g	R
RA-228	0.600	pci/g	JD	0.500	pci/g	R	0.500	pci/g	R
RU-106	1.100	pci/g	JD	1.000	pci/g	R	1.000	pci/g	R
SR-90	0.500	pci/g	-	0.500	pci/g	-	0.700	pci/g	JD
TC-99	0.900	pci/g	J	0.900	pci/g	J	0.900	pci/g	J
TH-228	0.600	pci/g	J	0.600	pci/g	J	0.600	pci/g	J
TH-230	0.692	pci/g	J	0.845	pci/g	J	0.606	pci/g	J
TH-232	0.600	pci/g	J	0.600	pci/g	J	0.600	pci/g	J
TH-TOTAL	1.690	ug/g	J	2.110	ug/g	J	1.800	ug/g	J
U-234	0.600	pci/g	J	0.600	pci/g	J	1.200	pci/g	JD
U-235/236	0.600	pci/g	J	0.600	pci/g	J	1.200	pci/g	JD
U-238	0.600	pci/g	J	0.600	pci/g	J	1.200	pci/g	JD
U-TOTAL	1.530	mg/kg	J	4.200	mg/kg	R	5.690	mg/kg	R

0537

5174

TABLE F-6A
(Continued)

PHASE I - RADIOLOGICAL PARAMETERS

BORING NUMBER	1518			1518			1518		
SAMPLE NUMBER	055462			055464			055466		
	4 - 4.5			5 - 5.5			6 - 6.5		
SAMPLING DATE	05/22/90			05/22/90			05/22/90		
RADIOLOGICAL PARAMETERS	RESULTS	UNITS	VQ	RESULTS	UNITS	VQ	RESULTS	UNITS	VQ
CS-137	0.200	pci/g	J	0.200	pci/g	R	0.200	pci/g	R
NP-237	0.600	pci/g	J	0.600	pci/g	J	0.600	pci/g	J
PU-238	0.600	pci/g	J	0.600	pci/g	J	0.600	pci/g	J
PU-239/240	0.600	pci/g	J	0.600	pci/g	J	0.600	pci/g	J
RA-226	0.537	pci/g	J	0.696	pci/g	R	0.808	pci/g	R
RA-228	0.500	pci/g	J	0.500	pci/g	R	0.500	pci/g	R
RU-106	1.000	pci/g	J	1.000	pci/g	R	1.000	pci/g	R
SR-90	0.500	pci/g	-	0.500	pci/g	-	0.600	pci/g	JD
TC-99	0.900	pci/g	J	0.900	pci/g	J	0.900	pci/g	J
TH-228	0.600	pci/g	J	0.600	pci/g	J	0.737	pci/g	J
TH-230	0.787	pci/g	J	1.130	pci/g	J	1.230	pci/g	J
TH-232	0.600	pci/g	J	0.600	pci/g	J	0.623	pci/g	J
TH-TOTAL	2.120	ug/g	J	2.780	ug/g	J	5.620	ug/g	J
U-234	0.600	pci/g	J	0.709	pci/g	J	0.629	pci/g	J
U-235/236	0.600	pci/g	J	0.600	pci/g	J	0.600	pci/g	J
U-238	0.600	pci/g	J	0.879	pci/g	J	0.873	pci/g	J
U-TOTAL	1.750	mg/kg	J	5.360	mg/kg	R	7.610	mg/kg	R

TABLE F-6A
(Continued)

PHASE I - RADIOLOGICAL PARAMETERS

BORING NUMBER	1518			1518			1518		
SAMPLE NUMBER	055468			055470			055472		
	7 - 7.5			8 - 8.5			9 - 9.5		
SAMPLING DATE	05/22/90			05/22/90			05/22/90		
RADIOLOGICAL PARAMETERS	RESULTS	UNITS	VQ	RESULTS	UNITS	VQ	RESULTS	UNITS	VQ
CS-137	0.200	pci/g	R	0.200	pci/g	R	0.200	pci/g	J
NP-237	0.600	pci/g	J	0.600	pci/g	J	0.600	pci/g	J
PU-238	0.600	pci/g	J	0.600	pci/g	J	0.600	pci/g	J
PU-239/240	0.600	pci/g	J	0.600	pci/g	J	0.600	pci/g	J
RA-226	0.300	pci/g	R	0.602	pci/g	R	0.539	pci/g	J
RA-228	0.500	pci/g	R	0.500	pci/g	R	0.500	pci/g	J
RU-106	1.000	pci/g	R	1.000	pci/g	R	1.000	pci/g	J
SR-90	0.500	pci/g	J	0.500	pci/g	-	0.500	pci/g	-
TC-99	0.900	pci/g	J	0.900	pci/g	J	0.900	pci/g	J
TH-228	0.642	pci/g	J	0.600	pci/g	J	1.530	pci/g	J
TH-230	1.170	pci/g	J	0.888	pci/g	J	0.690	pci/g	J
TH-232	0.600	pci/g	J	0.600	pci/g	J	0.600	pci/g	J
TH-TOTAL	3.360	ug/g	J	3.520	ug/g	J	2.850	ug/g	J
U-234	0.618	pci/g	J	0.600	pci/g	J	0.600	pci/g	J
U-235/236	0.600	pci/g	J	0.600	pci/g	J	0.600	pci/g	J
U-238	0.625	pci/g	J	0.629	pci/g	J	0.600	pci/g	J
U-TOTAL	6.020	mg/kg	R	5.560	mg/kg	R	1.620	mg/kg	J

0639

5174

TABLE F-6A
(Continued)

PHASE I - RADIOLOGICAL PARAMETERS

BORING NUMBER	1518			1518			1518		
SAMPLE NUMBER	055474			055476			055478		
	10 - 10.5			11 - 11.5			12 - 12.5		
SAMPLING DATE	05/22/90			05/22/90			05/22/90		
RADIOLOGICAL PARAMETERS	RESULTS	UNITS	VQ	RESULTS	UNITS	VQ	RESULTS	UNITS	VQ
CS-137	0.200	pci/g	UJ	0.200	pci/g	R	0.200	pci/g	UJ
NP-237	0.600	pci/g	U	0.600	pci/g	U	0.600	pci/g	U
PU-238	0.600	pci/g	UJ	0.600	pci/g	UJ	0.600	pci/g	U
PU-239/240	0.600	pci/g	UJ	0.600	pci/g	UJ	0.600	pci/g	U
RA-226	0.430	pci/g	J	0.300	pci/g	R	0.510	pci/g	J
RA-228	0.500	pci/g	UJ	0.500	pci/g	R	0.500	pci/g	UJ
RU-106	1.000	pci/g	UJ	1.000	pci/g	R	1.000	pci/g	UJ
SR-90	0.500	pci/g	UJ	0.500	pci/g	R	0.500	pci/g	UJ
TC-99	0.900	pci/g	UJ	0.900	pci/g	UJ	0.900	pci/g	UJ
TH-228	0.600	pci/g	U	5.920	pci/g	-	0.600	pci/g	U
TH-230	0.863	pci/g	J	3.010	pci/g	J	1.070	pci/g	J
TH-232	0.600	pci/g	U	5.590	pci/g	-	0.600	pci/g	U
TH-TOTAL	2.570	ug/g	-	50.500	ug/g	-	2.400	ug/g	U
U-234	0.694	pci/g	R	0.610	pci/g	R	0.802	pci/g	R
U-235/236	0.600	pci/g	R	0.930	pci/g	R	0.600	pci/g	R
U-238	0.739	pci/g	R	0.915	pci/g	R	0.665	pci/g	R
U-TOTAL	1.800	mg/kg	UJ	5.330	mg/kg	R	2.800	mg/kg	UJ

TABLE F-6A
(Continued)

PHASE I - RADIOLOGICAL PARAMETERS

BORING NUMBER	1518			1518			1518		
SAMPLE NUMBER	055481			055483			055485		
	13.5 - 14			14.5 - 15			15.5 - 16		
SAMPLING DATE	05/22/90			05/22/90			05/22/90		
RADIOLOGICAL PARAMETERS	RESULTS	UNITS	VQ	RESULTS	UNITS	VQ	RESULTS	UNITS	VQ
CS-137	0.200	pci/g	R	0.200	pci/g	UJ	0.200	pci/g	R
NP-237	0.600	pci/g	U	0.600	pci/g	U	0.600	pci/g	U
PU-238	0.600	pci/g	U	0.600	pci/g	U	0.600	pci/g	U
PU-239/240	0.600	pci/g	U	0.600	pci/g	U	0.600	pci/g	U
RA-226	0.520	pci/g	R	0.500	pci/g	UJ	0.300	pci/g	R
RA-228	0.500	pci/g	R	1.200	pci/g	UJ	0.500	pci/g	R
RU-106	1.000	pci/g	R	2.100	pci/g	UJ	1.000	pci/g	R
SR-90	0.500	pci/g	UJ	0.500	pci/g	UJ	0.500	pci/g	UJ
TC-99	0.900	pci/g	UJ	0.900	pci/g	UJ	0.900	pci/g	UJ
TH-228	0.600	pci/g	U	0.600	pci/g	U	0.600	pci/g	U
TH-230	0.600	pci/g	U	0.968	pci/g	J	1.060	pci/g	J
TH-232	0.600	pci/g	U	0.600	pci/g	U	0.600	pci/g	U
TH-TOTAL	1.260	ug/g	-	1.700	ug/g	U	2.610	ug/g	-
U-234	0.898	pci/g	R	1.080	pci/g	R	2.910	pci/g	R
U-235/236	0.600	pci/g	R	0.772	pci/g	R	0.600	pci/g	R
U-238	0.768	pci/g	R	0.703	pci/g	R	0.600	pci/g	R
U-TOTAL	4.570	mg/kg	R	12.000	mg/kg	UJ	4.260	mg/kg	R

0541

0574

TABLE F-6A
(Continued)

PHASE I - RADIOLOGICAL PARAMETERS

BORING NUMBER	1518			1518			1518		
SAMPLE NUMBER	055487			055489			055491		
	16.5 - 17			17.5 - 18			18.5 - 19		
SAMPLING DATE	05/22/90			05/22/90			05/22/90		
RADIOLOGICAL PARAMETERS	RESULTS	UNITS	VQ	RESULTS	UNITS	VQ	RESULTS	UNITS	VQ
CS-137	0.200	pci/g	UJ	0.200	pci/g	R	0.200	pci/g	UJ
NP-237	0.600	pci/g	U	0.600	pci/g	U	0.600	pci/g	U
PU-238	0.600	pci/g	U	0.600	pci/g	U	0.600	pci/g	U
PU-239/240	0.600	pci/g	U	0.600	pci/g	U	0.600	pci/g	U
RA-226	0.510	pci/g	J	0.560	pci/g	R	0.430	pci/g	J
RA-228	0.500	pci/g	UJ	0.500	pci/g	R	0.500	pci/g	UJ
RU-106	1.000	pci/g	UJ	1.000	pci/g	R	1.000	pci/g	UJ
SR-90	0.500	pci/g	UJ	0.500	pci/g	UJ	0.500	pci/g	UJ
TC-99	0.900	pci/g	UJ	0.900	pci/g	UJ	0.900	pci/g	UJ
TH-228	0.600	pci/g	U	0.740	pci/g	J	0.740	pci/g	J
TH-230	1.020	pci/g	J	0.921	pci/g	J	0.921	pci/g	J
TH-232	0.600	pci/g	U	0.600	pci/g	U	0.600	pci/g	U
TH-TOTAL	1.700	ug/g	U	3.950	ug/g	-	3.950	ug/g	-
U-234	1.980	pci/g	R	0.600	pci/g	R	0.600	pci/g	R
U-235/236	0.600	pci/g	R	0.600	pci/g	R	0.600	pci/g	R
U-238	0.602	pci/g	R	0.669	pci/g	R	0.740	pci/g	R
U-TOTAL	2.400	mg/kg	UJ	5.500	mg/kg	R	1.680	mg/kg	J

TABLE F-6A
(Continued)

PHASE I - RADIOLOGICAL PARAMETERS

BORING NUMBER	1518			2046			2046		
SAMPLE NUMBER	055493			008950			008956		
	19.5 - 20			30 - 31.5			61 - 62.5		
SAMPLING DATE	05/22/90			12/14/88			12/15/88		
RADIOLOGICAL PARAMETERS	RESULTS	UNITS	VQ	RESULTS	UNITS	VQ	RESULTS	UNITS	VQ
CS-137	0.200	pci/g	R	0.200	pci/g	R	NA		
NP-237	0.600	pci/g	U	0.600	pci/g	U	NA		
PU-238	0.600	pci/g	UJ	0.600	pci/g	UJ	NA		
PU-239/240	0.600	pci/g	UJ	0.600	pci/g	UJ	NA		
RA-226	0.600	pci/g	R	0.500	pci/g	R	NA		
RA-228	0.500	pci/g	R	0.500	pci/g	R	NA		
RU-106	1.000	pci/g	R	1.000	pci/g	R	NA		
SR-90	0.500	pci/g	R	0.700	pci/g	-	NA		
TC-99	0.900	pci/g	UJ	0.900	pci/g	U	NA		
TH-228	0.600	pci/g	U	0.600	pci/g	U	NA		
TH-230	1.130	pci/g	J	0.900	pci/g	-	NA		
TH-232	0.600	pci/g	U	0.600	pci/g	U	NA		
TH-TOTAL	2.630	ug/g	-	NA			NA		
U-234	0.799	pci/g	R	0.600	pci/g	U	NA		
U-235/236	0.600	pci/g	R	0.600	pci/g	U	NA		
U-238	0.600	pci/g	R	0.600	pci/g	U	NA		
U-TOTAL	5.800	mg/kg	R	3.000	mg/kg	R	16.000	mg/kg	-

0543

5124

TABLE F-6A
(Continued)

PHASE I - RADIOLOGICAL PARAMETERS

BORING NUMBER	2065			2065			2385		
SAMPLE NUMBER	007184			007191			032622		
	13.5 - 15			35 - 36.5			4.5 - 6		
SAMPLING DATE	09/29/87			09/29/87			04/20/90		
RADIOLOGICAL PARAMETERS	RESULTS	UNITS	VQ	RESULTS	UNITS	VQ	RESULTS	UNITS	VQ
CS-137	0.200	pci/g	UJ	0.200	pci/g	UJ	0.200	pci/g	R
NP-237	0.600	pci/g	UJ	0.600	pci/g	UJ	0.600	pci/g	U
PU-238	0.600	pci/g	UJ	0.600	pci/g	U	0.600	pci/g	U
PU-239/240	0.600	pci/g	UJ	0.600	pci/g	U	0.600	pci/g	U
RA-226	0.300	pci/g	UJ	0.500	pci/g	J	0.900	pci/g	R
RA-228	0.600	pci/g	UJ	0.500	pci/g	UJ	0.740	pci/g	R
RU-106	1.000	pci/g	UJ	1.000	pci/g	UJ	1.000	pci/g	R
SR-90	0.500	pci/g	UJ	0.500	pci/g	U	1.340	pci/g	-
TC-99	2.600	pci/g	UJ	2.900	pci/g	NV	0.900	pci/g	U
TH-228	1.000	pci/g	J	0.600	pci/g	U	0.724	pci/g	-
TH-230	1.600	pci/g	J	0.600	pci/g	U	0.736	pci/g	-
TH-232	0.700	pci/g	J	0.600	pci/g	U	0.651	pci/g	-
TH-TOTAL	NA			NA			5.880	ug/g	-
U-234	1.200	pci/g	J	0.600	pci/g	J	0.981	pci/g	-
U-235/236	0.600	pci/g	UJ	0.600	pci/g	U	0.600	pci/g	U
U-238	1.300	pci/g	J	0.600	pci/g	U	0.736	pci/g	-
U-TOTAL	NA			NA			2.760	mg/kg	R

TABLE F-6A
(Continued)

PHASE I - RADIOLOGICAL PARAMETERS

BORING NUMBER	2385			3046			3385		
SAMPLE NUMBER	032639			032709			032725		
	45 - 46.5			100 - 101.5			80 - 81.5		
SAMPLING DATE	04/21/90			05/30/90			06/13/90		
RADIOLOGICAL PARAMETERS	RESULTS	UNITS	VQ	RESULTS	UNITS	VQ	RESULTS	UNITS	VQ
CS-137	0.200	pci/g	UJ	0.200	pci/g	UJ	0.200	pci/g	R
NP-237	0.600	pci/g	U	0.600	pci/g	U	0.600	pci/g	U
PU-238	0.600	pci/g	U	0.600	pci/g	UJ	0.600	pci/g	UJ
PU-239/240	0.600	pci/g	U	0.600	pci/g	UJ	0.600	pci/g	UJ
RA-226	0.650	pci/g	J	0.492	pci/g	J	1.700	pci/g	R
RA-228	0.500	pci/g	UJ	0.500	pci/g	UJ	1.000	pci/g	R
RU-106	1.000	pci/g	UJ	1.000	pci/g	UJ	1.000	pci/g	R
SR-90	0.500	pci/g	U	0.500	pci/g	R	0.500	pci/g	U
TC-99	0.900	pci/g	U	1.100	pci/g	D	0.900	pci/g	U
TH-228	0.600	pci/g	U	0.742	pci/g	J	0.600	pci/g	U
TH-230	0.600	pci/g	U	0.969	pci/g	J	0.604	pci/g	-
TH-232	0.600	pci/g	U	0.600	pci/g	UJ	0.600	pci/g	U
TH-TOTAL	1.100	ug/g	U	3.930	ug/g	J	4.150	ug/g	-
U-234	0.600	pci/g	U	4.330	pci/g	J	0.736	pci/g	J
U-235/236	0.600	pci/g	U	0.600	pci/g	UJ	0.600	pci/g	U
U-238	0.600	pci/g	U	4.230	pci/g	J	1.050	pci/g	J
U-TOTAL	4.630	mg/kg	J	12.700	mg/kg	J	5.800	mg/kg	R

TABLE F-6A
(Continued)

PHASE I - RADIOLOGICAL PARAMETERS

BORING NUMBER	4014			4014			SPA-0		
SAMPLE NUMBER	010393			010408			039170		
	65 - 66.5			140 - 141.5					
SAMPLING DATE	11/02/88			11/08/88			07/29/92		
RADIOLOGICAL PARAMETERS	RESULTS	UNITS	VQ	RESULTS	UNITS	VQ	RESULTS	UNITS	VQ
CS-137	0.200	pci/g	UJ	0.200	pci/g	UJ	0.200	pci/g	U
GROSS ALPHA	NA			NA			832.000	pci/g	NV
GROSS BETA	NA			NA			23.200	pci/g	NV
NP-237	0.600	pci/g	U	0.600	pci/g	U	NA		
PU-238	0.600	pci/g	U	0.600	pci/g	U	0.600	pci/g	U
PU-239/240	0.600	pci/g	U	0.600	pci/g	U	0.600	pci/g	U
RA-226	0.400	pci/g	J	0.300	pci/g	UJ	1.250	pci/g	-
RA-228	0.500	pci/g	UJ	0.500	pci/g	UJ	1.220	pci/g	-
RU-106	1.000	pci/g	UJ	1.000	pci/g	UJ	1.000	pci/g	U
SR-90	0.500	pci/g	U	0.500	pci/g	U	0.500	pci/g	UJ
TC-99	0.900	pci/g	U	0.900	pci/g	U	0.900	pci/g	U
TH-228	0.600	pci/g	UJ	0.600	pci/g	UJ	1.230	pci/g	J
TH-230	0.700	pci/g	J	0.700	pci/g	J	1.740	pci/g	J
TH-232	0.600	pci/g	UJ	0.600	pci/g	UJ	1.070	pci/g	J
TH-TOTAL	NA			NA			9.640	pci/g	J
U-234	0.600	pci/g	U	0.600	pci/g	U	2.420	pci/g	-
U-235/236	0.600	pci/g	U	0.600	pci/g	U	0.600	pci/g	U
U-238	0.600	pci/g	U	0.600	pci/g	U	2.460	pci/g	-
U-TOTAL	1.000	mg/kg	J	1.000	mg/kg	UJ	18.100	mg/kg	-

TABLE F-6A
(Continued)

PHASE I - RADIOLOGICAL PARAMETERS

BORING NUMBER	SPA-10		
SAMPLE NUMBER	039171		
	0 - 10		
SAMPLING DATE	07/29/92		
RADIOLOGICAL PARAMETERS	RESULTS	UNITS	VQ
CS-137	0.200	pci/g	U
GROSS ALPHA	11.500	pci/g	NV
GROSS BETA	20.100	pci/g	NV
PU-238	0.600	pci/g	U
PU-239/240	0.600	pci/g	U
RA-226	0.870	pci/g	-
RA-228	0.640	pci/g	-
RU-106	1.000	pci/g	U
SR-90	0.500	pci/g	UJ
TC-99	0.900	pci/g	U
TH-228	0.960	pci/g	J
TH-230	1.140	pci/g	J
TH-232	0.640	pci/g	J
TH-TOTAL	5.750	ug/g	J
U-234	1.000	pci/g	-
U-235/236	0.600	pci/g	U
U-238	0.950	pci/g	-
U-TOTAL	3.030	mg/kg	-

0547

5974
FEMP-OU02-4 DRAFT
February 18, 1994

TABLE F-6A
(Continued)

PHASE I - CHEMICAL PARAMETERS

BORING NUMBER	1456			1459			1462		
SAMPLE NUMBER	055906			055919			055932		
	3.75-3.75			5-5			4-4		
SAMPLING DATE	11/05/89			11/06/89			11/07/89		
CHEMICAL PARAMETERS	RESULTS	UNITS	L VQ	RESULTS	UNITS	L VQ	RESULTS	UNITS	L VQ
Inorganics									
Aluminum	7820.000	mg/kg	D -	7950.000	mg/kg	D -	5820.000	mg/kg	D -
Antimony	6.600	mg/kg	D R	5.800	mg/kg	D R	6.500	mg/kg	D R
Arsenic	8.100	mg/kg	D -	4.600	mg/kg	D -	5.900	mg/kg	D -
Barium	76.900	mg/kg	D -	84.500	mg/kg	D -	57.300	mg/kg	D -
Beryllium	1.500	mg/kg	D -	1.400	mg/kg	D -	1.200	mg/kg	D U
Cadmium	4.400	mg/kg	D -	4.100	mg/kg	D -	4.600	mg/kg	D -
Calcium	83300.000	mg/kg	D -	78600.000	mg/kg	D -	109000.000	mg/kg	D -
Chromium	24.900	mg/kg	D -	23.800	mg/kg	D -	24.000	mg/kg	D -
Cobalt	19.100	mg/kg	D -	11.000	mg/kg	D -	10.700	mg/kg	D J
Copper	21.700	mg/kg	D -	24.300	mg/kg	D -	12.100	mg/kg	D -
Cyanide	0.280	mg/kg	D U	0.270	mg/kg	D U	0.290	mg/kg	D U
Iron	18200.000	mg/kg	D -	15900.000	mg/kg	D -	14900.000	mg/kg	D -
Lead	19.200	mg/kg	D -	34.000	mg/kg	D -	13.200	mg/kg	D -
Magnesium	20600.000	mg/kg	D -	24600.000	mg/kg	D -	33100.000	mg/kg	D -
Manganese	572.000	mg/kg	D -	671.000	mg/kg	D -	424.000	mg/kg	D -
Mercury	0.230	mg/kg	D -	0.250	mg/kg	D -	0.110	mg/kg	D U
Molybdenum	2.200	mg/kg	D U	1.900	mg/kg	D U	2.200	mg/kg	D U
Nickel	39.500	mg/kg	D -	29.500	mg/kg	D -	32.100	mg/kg	D -
Potassium	761.000	mg/kg	D -	733.000	mg/kg	D -	561.000	mg/kg	D J
Selenium	0.360	mg/kg	D R	0.320	mg/kg	D R	0.440	mg/kg	D R
Silver	2.200	mg/kg	D -	1.900	mg/kg	D U	2.200	mg/kg	D U
Sodium	144.000	mg/kg	D -	227.000	mg/kg	D -	130.000	mg/kg	D J
Thallium	0.200	mg/kg	D J	0.160	mg/kg	D U	0.220	mg/kg	D U
Vanadium	24.800	mg/kg	D -	21.400	mg/kg	D -	23.400	mg/kg	D -
Zinc	50.400	mg/kg	D J	65.100	mg/kg	D J	39.800	mg/kg	D J
Volatile Organics									
1,1,1-Trichloroethane	6.000	ug/kg	D UJ	5.000	ug/kg	D UJ	6.000	ug/kg	D UJ
1,1,2,2-Tetrachloroethane	6.000	ug/kg	D UJ	5.000	ug/kg	D UJ	6.000	ug/kg	D UJ
1,1,2-Trichloroethane	6.000	ug/kg	D UJ	5.000	ug/kg	D UJ	6.000	ug/kg	D UJ
1,1-Dichloroethane	6.000	ug/kg	D U	5.000	ug/kg	D UJ	6.000	ug/kg	D U
1,1-Dichloroethene	6.000	ug/kg	D U	5.000	ug/kg	D UJ	6.000	ug/kg	D U
1,2-Dichloroethane	6.000	ug/kg	D U	5.000	ug/kg	D UJ	6.000	ug/kg	D U
1,2-Dichloroethene	6.000	ug/kg	D U	5.000	ug/kg	D UJ	6.000	ug/kg	D UJ
1,2-Dichloropropane	6.000	ug/kg	D UJ	5.000	ug/kg	D UJ	6.000	ug/kg	D UJ
2-Butanone	11.000	ug/kg	D UJ	11.000	ug/kg	D UJ	12.000	ug/kg	D UJ
2-Hexanone	11.000	ug/kg	D UJ	11.000	ug/kg	D UJ	12.000	ug/kg	D UJ
4-Methyl-2-pentanone	11.000	ug/kg	D UJ	11.000	ug/kg	D UJ	12.000	ug/kg	D UJ
Acetone	11.000	ug/kg	D UJ	11.000	ug/kg	D UJ	12.000	ug/kg	D UJ
Benzene	6.000	ug/kg	D UJ	5.000	ug/kg	D UJ	6.000	ug/kg	D UJ
Bromodichloromethane	6.000	ug/kg	D UJ	5.000	ug/kg	D UJ	6.000	ug/kg	D UJ

TABLE F-6A
(Continued)

PHASE I - CHEMICAL PARAMETERS

BORING NUMBER	1456				1459				1462			
SAMPLE NUMBER	055906				055919				055932			
	3.75-3.75				5-5				4-4			
SAMPLING DATE	11/05/89				11/06/89				11/07/89			
CHEMICAL PARAMETERS	RESULTS	UNITS	L	VQ	RESULTS	UNITS	L	VQ	RESULTS	UNITS	L	VQ
Volatile Organics												
Bromoform	6.000	ug/kg	D	UJ	5.000	ug/kg	D	UJ	6.000	ug/kg	D	UJ
Bromomethane	11.000	ug/kg	D	UJ	11.000	ug/kg	D	UJ	12.000	ug/kg	D	UJ
Carbon Tetrachloride	6.000	ug/kg	D	UJ	5.000	ug/kg	D	UJ	6.000	ug/kg	D	UJ
Carbon disulfide	6.000	ug/kg	D	U	5.000	ug/kg	D	UJ	6.000	ug/kg	D	U
Chlorobenzene	6.000	ug/kg	D	UJ	5.000	ug/kg	D	UJ	6.000	ug/kg	D	UJ
Chloroethane	11.000	ug/kg	D	U	11.000	ug/kg	D	UJ	12.000	ug/kg	D	U
Chloroform	3.000	ug/kg	D	J	5.000	ug/kg	D	UJ	7.000	ug/kg	D	-
Chloromethane	11.000	ug/kg	D	U	11.000	ug/kg	D	UJ	12.000	ug/kg	D	UJ
Dibromochloromethane	6.000	ug/kg	D	UJ	5.000	ug/kg	D	UJ	6.000	ug/kg	D	UJ
Ethylbenzene	6.000	ug/kg	D	UJ	5.000	ug/kg	D	UJ	6.000	ug/kg	D	UJ
Methylene chloride	21.000	ug/kg	D	U	18.000	ug/kg	D	UJ	6.000	ug/kg	D	-
Styrene	6.000	ug/kg	D	UJ	5.000	ug/kg	D	UJ	6.000	ug/kg	D	UJ
Tetrachloroethene	6.000	ug/kg	D	UJ	5.000	ug/kg	D	UJ	6.000	ug/kg	D	UJ
Toluene	6.000	ug/kg	D	UJ	5.000	ug/kg	D	UJ	6.000	ug/kg	D	UJ
Trichloroethene	6.000	ug/kg	D	UJ	5.000	ug/kg	D	UJ	6.000	ug/kg	D	UJ
Vinyl Acetate	11.000	ug/kg	D	UJ	11.000	ug/kg	D	UJ	12.000	ug/kg	D	UJ
Vinyl chloride	11.000	ug/kg	D	U	11.000	ug/kg	D	UJ	12.000	ug/kg	D	U
Xylenes, Total	6.000	ug/kg	D	UJ	5.000	ug/kg	D	UJ	6.000	ug/kg	D	UJ
cis-1,3-Dichloropropene	6.000	ug/kg	D	UJ	5.000	ug/kg	D	UJ	6.000	ug/kg	D	UJ
trans-1,3-Dichloropropene	6.000	ug/kg	D	UJ	5.000	ug/kg	D	UJ	6.000	ug/kg	D	UJ
Semivolatile Organics												
1,2,4-Trichlorobenzene	370.000	ug/kg	D	U	360.000	ug/kg	D	U	380.000	ug/kg	D	U
1,2-Dichlorobenzene	370.000	ug/kg	D	U	360.000	ug/kg	D	U	380.000	ug/kg	D	U
1,3-Dichlorobenzene	370.000	ug/kg	D	U	360.000	ug/kg	D	U	380.000	ug/kg	D	U
1,4-Dichlorobenzene	370.000	ug/kg	D	U	360.000	ug/kg	D	U	380.000	ug/kg	D	U
2,4,5-Trichlorophenol	1800.000	ug/kg	D	U	1700.000	ug/kg	D	U	1800.000	ug/kg	D	U
2,4,6-Trichlorophenol	370.000	ug/kg	D	U	360.000	ug/kg	D	U	380.000	ug/kg	D	U
2,4-Dichlorophenol	370.000	ug/kg	D	U	360.000	ug/kg	D	U	380.000	ug/kg	D	U
2,4-Dimethylphenol	370.000	ug/kg	D	U	360.000	ug/kg	D	U	380.000	ug/kg	D	U
2,4-Dinitrophenol	1800.000	ug/kg	D	U	1700.000	ug/kg	D	UJ	1800.000	ug/kg	D	U
2,4-Dinitrotoluene	370.000	ug/kg	D	U	360.000	ug/kg	D	U	380.000	ug/kg	D	U
2,6-Dinitrotoluene	370.000	ug/kg	D	U	360.000	ug/kg	D	U	380.000	ug/kg	D	U
2-Chloronaphthalene	370.000	ug/kg	D	U	360.000	ug/kg	D	U	380.000	ug/kg	D	U
2-Chlorophenol	370.000	ug/kg	D	U	360.000	ug/kg	D	U	380.000	ug/kg	D	U
2-Methylnaphthalene	370.000	ug/kg	D	U	360.000	ug/kg	D	U	380.000	ug/kg	D	U
2-Methylphenol	370.000	ug/kg	D	U	360.000	ug/kg	D	U	380.000	ug/kg	D	U
2-Nitroaniline	1800.000	ug/kg	D	U	1700.000	ug/kg	D	U	1800.000	ug/kg	D	U
2-Nitrophenol	370.000	ug/kg	D	U	360.000	ug/kg	D	U	380.000	ug/kg	D	U
3,3'-Dichlorobenzidine	740.000	ug/kg	D	UJ	710.000	ug/kg	D	UJ	750.000	ug/kg	D	UJ
3-Nitroaniline	1800.000	ug/kg	D	U	1700.000	ug/kg	D	U	1800.000	ug/kg	D	U

TABLE F-6A
(Continued)

PHASE I - CHEMICAL PARAMETERS

BORING NUMBER	1456			1459			1462		
SAMPLE NUMBER	055906			055919			055932		
	3.75-3.75			5-5			4-4		
SAMPLING DATE	11/05/89			11/06/89			11/07/89		
CHEMICAL PARAMETERS	RESULTS	UNITS	L VQ	RESULTS	UNITS	L VQ	RESULTS	UNITS	L VQ
Semivolatile Organics									
4,6-Dinitro-2-methylphenol	1800.000	ug/kg	D U	1700.000	ug/kg	D U	1800.000	ug/kg	D U
4-Bromophenyl phenyl ether	370.000	ug/kg	D U	360.000	ug/kg	D U	380.000	ug/kg	D U
4-Chloro-3-methylphenol	370.000	ug/kg	D U	360.000	ug/kg	D U	380.000	ug/kg	D U
4-Chlorophenylphenyl ether	370.000	ug/kg	D U	360.000	ug/kg	D U	380.000	ug/kg	D U
4-Methylphenol	370.000	ug/kg	D U	360.000	ug/kg	D U	380.000	ug/kg	D U
4-Nitroaniline	1800.000	ug/kg	D UJ	1700.000	ug/kg	D UJ	1800.000	ug/kg	D UJ
4-Nitrophenol	1800.000	ug/kg	D U	1700.000	ug/kg	D U	1800.000	ug/kg	D U
Acenaphthene	370.000	ug/kg	D U	360.000	ug/kg	D U	380.000	ug/kg	D U
Acenaphthylene	370.000	ug/kg	D U	360.000	ug/kg	D U	380.000	ug/kg	D U
Anthracene	370.000	ug/kg	D U	360.000	ug/kg	D U	380.000	ug/kg	D U
Benzo(a)anthracene	370.000	ug/kg	D U	170.000	ug/kg	D J	130.000	ug/kg	D J
Benzo(a)pyrene	370.000	ug/kg	D U	230.000	ug/kg	D J	380.000	ug/kg	D U
Benzo(b)fluoranthene	370.000	ug/kg	D U	290.000	ug/kg	D J	140.000	ug/kg	D J
Benzo(g,h,i)perylene	370.000	ug/kg	D U	360.000	ug/kg	D U	380.000	ug/kg	D U
Benzo(k)fluoranthene	370.000	ug/kg	D U	360.000	ug/kg	D U	380.000	ug/kg	D U
Benzoic acid	1800.000	ug/kg	D U	1700.000	ug/kg	D U	1800.000	ug/kg	D U
Benzyl alcohol	370.000	ug/kg	D U	360.000	ug/kg	D U	380.000	ug/kg	D U
Butyl benzyl phthalate	370.000	ug/kg	D U	360.000	ug/kg	D U	380.000	ug/kg	D U
Chrysene	370.000	ug/kg	D U	170.000	ug/kg	D J	150.000	ug/kg	D J
Di-n-butyl phthalate	370.000	ug/kg	D U	360.000	ug/kg	D U	380.000	ug/kg	D U
Di-n-octyl phthalate	370.000	ug/kg	D U	360.000	ug/kg	D U	380.000	ug/kg	D U
Dibenzo(a,h)anthracene	370.000	ug/kg	D U	360.000	ug/kg	D U	380.000	ug/kg	D U
Dibenzofuran	370.000	ug/kg	D U	360.000	ug/kg	D U	380.000	ug/kg	D U
Diethyl phthalate	370.000	ug/kg	D U	360.000	ug/kg	D U	380.000	ug/kg	D U
Dimethyl phthalate	370.000	ug/kg	D U	360.000	ug/kg	D U	380.000	ug/kg	D U
Fluoranthene	39.000	ug/kg	D J	300.000	ug/kg	D J	300.000	ug/kg	D J
Fluorene	370.000	ug/kg	D U	360.000	ug/kg	D U	380.000	ug/kg	D U
Hexachlorobenzene	370.000	ug/kg	D U	360.000	ug/kg	D U	380.000	ug/kg	D U
Hexachlorobutadiene	370.000	ug/kg	D U	360.000	ug/kg	D U	380.000	ug/kg	D U
Hexachlorocyclopentadiene	370.000	ug/kg	D U	360.000	ug/kg	D U	380.000	ug/kg	D U
Hexachloroethane	370.000	ug/kg	D U	360.000	ug/kg	D U	380.000	ug/kg	D U
Indeno(1,2,3-cd)pyrene	370.000	ug/kg	D U	360.000	ug/kg	D U	380.000	ug/kg	D U
Isophorone	370.000	ug/kg	D U	360.000	ug/kg	D U	380.000	ug/kg	D U
Methyl parathion	50.000	ug/kg	D U	50.000	ug/kg	D U	59.000	ug/kg	C U
N-Nitroso-di-n-propylamine	370.000	ug/kg	D U	360.000	ug/kg	D U	380.000	ug/kg	D U
N-Nitrosodiphenylamine	370.000	ug/kg	D U	360.000	ug/kg	D U	380.000	ug/kg	D U
Naphthalene	370.000	ug/kg	D U	360.000	ug/kg	D U	380.000	ug/kg	D U
Nitrobenzene	370.000	ug/kg	D U	360.000	ug/kg	D U	380.000	ug/kg	D U
Parathion	50.000	ug/kg	D U	50.000	ug/kg	D U	59.000	ug/kg	C U
Pentachlorophenol	1800.000	ug/kg	D U	1700.000	ug/kg	D U	1800.000	ug/kg	D U
Phenanthrene	370.000	ug/kg	D U	110.000	ug/kg	D J	240.000	ug/kg	D J
Phenol	370.000	ug/kg	D U	360.000	ug/kg	D U	380.000	ug/kg	D U

TABLE F-6A
(Continued)

PHASE I - CHEMICAL PARAMETERS

BORING NUMBER	1456			1459			1462		
SAMPLE NUMBER	055906			055919			055932		
	3.75-3.75			5-5			4-4		
SAMPLING DATE	11/05/89			11/06/89			11/07/89		
CHEMICAL PARAMETERS	RESULTS	UNITS	L VQ	RESULTS	UNITS	L VQ	RESULTS	UNITS	L VQ
Semivolatile Organics									
Pyrene	43.000	ug/kg	D J	270.000	ug/kg	D J	400.000	ug/kg	D -
Sulfotep	50.000	ug/kg	D UJ	50.000	ug/kg	D UJ	59.000	ug/kg	C U
bis(2-Chloroethoxy)methane	370.000	ug/kg	D U	360.000	ug/kg	D U	380.000	ug/kg	D U
bis(2-Chloroethyl)ether	370.000	ug/kg	D U	360.000	ug/kg	D U	380.000	ug/kg	D U
bis(2-Chloroisopropyl) ether	370.000	ug/kg	D U	360.000	ug/kg	D U	380.000	ug/kg	D U
bis(2-Ethylhexyl) phthalate	370.000	ug/kg	D U	360.000	ug/kg	D U	380.000	ug/kg	D U
p-Chloroaniline	370.000	ug/kg	D U	360.000	ug/kg	D U	380.000	ug/kg	D U
Pesticide Organics/PCBs									
4,4'-DDD	18.000	ug/kg	D UJ	86.000	ug/kg	D UJ	180.000	ug/kg	D U
4,4'-DDE	18.000	ug/kg	D UJ	86.000	ug/kg	D UJ	180.000	ug/kg	D U
4,4'-DDT	18.000	ug/kg	D UJ	86.000	ug/kg	D UJ	180.000	ug/kg	D U
Aldrin	9.000	ug/kg	D UJ	43.000	ug/kg	D UJ	92.000	ug/kg	D U
Aroclor-1016	90.000	ug/kg	D UJ	430.000	ug/kg	D UJ	920.000	ug/kg	D U
Aroclor-1221	90.000	ug/kg	D UJ	430.000	ug/kg	D UJ	920.000	ug/kg	D U
Aroclor-1232	90.000	ug/kg	D UJ	430.000	ug/kg	D UJ	920.000	ug/kg	D U
Aroclor-1242	90.000	ug/kg	D UJ	430.000	ug/kg	D UJ	920.000	ug/kg	D U
Aroclor-1248	90.000	ug/kg	D UJ	430.000	ug/kg	D UJ	920.000	ug/kg	D U
Aroclor-1254	130.000	ug/kg	D J	1100.000	ug/kg	D J	690.000	ug/kg	D J
Aroclor-1260	150.000	ug/kg	D UJ	860.000	ug/kg	D UJ	1800.000	ug/kg	D U
Dieldrin	18.000	ug/kg	D UJ	86.000	ug/kg	D UJ	180.000	ug/kg	D U
Dimethoate	50.000	ug/kg	D U	50.000	ug/kg	D U	59.000	ug/kg	C U
Disulfoton	50.000	ug/kg	D U	50.000	ug/kg	D U	59.000	ug/kg	C U
Endosulfan II	18.000	ug/kg	D UJ	86.000	ug/kg	D UJ	180.000	ug/kg	D U
Endosulfan sulfate	18.000	ug/kg	D UJ	86.000	ug/kg	D UJ	180.000	ug/kg	D U
Endosulfan-I	9.000	ug/kg	D UJ	43.000	ug/kg	D UJ	92.000	ug/kg	D U
Endrin	18.000	ug/kg	D UJ	86.000	ug/kg	D UJ	180.000	ug/kg	D U
Endrin ketone	18.000	ug/kg	D UJ	86.000	ug/kg	D UJ	180.000	ug/kg	D U
Famphur	100.000	ug/kg	D U	100.000	ug/kg	D U	118.000	ug/kg	C U
Heptachlor	9.000	ug/kg	D UJ	43.000	ug/kg	D UJ	92.000	ug/kg	D U
Heptachlor epoxide	9.000	ug/kg	D UJ	43.000	ug/kg	D UJ	92.000	ug/kg	D U
Methoxychlor	90.000	ug/kg	D UJ	430.000	ug/kg	D UJ	920.000	ug/kg	D U
Phorate	50.000	ug/kg	D U	50.000	ug/kg	D U	59.000	ug/kg	C U
Thionazin	50.000	ug/kg	D U	50.000	ug/kg	D U	59.000	ug/kg	C U
Toxaphene	180.000	ug/kg	D UJ	860.000	ug/kg	D UJ	1800.000	ug/kg	D U
alpha-BHC	9.000	ug/kg	D UJ	43.000	ug/kg	D UJ	92.000	ug/kg	D U
alpha-Chlordane	90.000	ug/kg	D UJ	430.000	ug/kg	D UJ	920.000	ug/kg	D U
beta-BHC	9.000	ug/kg	D UJ	43.000	ug/kg	D UJ	92.000	ug/kg	D U
delta-BHC	9.000	ug/kg	D UJ	43.000	ug/kg	D UJ	92.000	ug/kg	D U
gamma-BHC (Lindane)	9.000	ug/kg	D UJ	43.000	ug/kg	D UJ	92.000	ug/kg	D U
gamma-Chlordane	90.000	ug/kg	D UJ	430.000	ug/kg	D UJ	920.000	ug/kg	D U

0651

3174

TABLE F-6A
(Continued)

PHASE I - CHEMICAL PARAMETERS

BORING NUMBER	1465			1468			1471		
SAMPLE NUMBER	055945			055959			055972		
	3.5-3.5			2.5-2.5			4-4		
SAMPLING DATE	11/08/89			11/14/89			11/16/89		
CHEMICAL PARAMETERS	RESULTS	UNITS	L VQ	RESULTS	UNITS	L VQ	RESULTS	UNITS	L VQ
Inorganics									
Aluminum	7780.000	mg/kg	D -	8660.000	mg/kg	C -	13200.000	mg/kg	C -
Antimony	6.100	mg/kg	D R	5.100	mg/kg	C R	5.300	mg/kg	C R
Arsenic	5.800	mg/kg	D -	6.300	mg/kg	C -	7.000	mg/kg	C -
Barium	198.000	mg/kg	D -	79.500	mg/kg	C -	103.000	mg/kg	C -
Beryllium	1.300	mg/kg	D -	1.600	mg/kg	C -	1.200	mg/kg	C U
Cadmium	4.500	mg/kg	D -	3.000	mg/kg	C -	3.100	mg/kg	C -
Calcium	102000.000	mg/kg	D -	126000.000	mg/kg	C -	12100.000	mg/kg	C -
Chromium	25.300	mg/kg	D -	21.300	mg/kg	C -	18.900	mg/kg	C -
Cobalt	14.900	mg/kg	D -	11.300	mg/kg	C -	12.700	mg/kg	C -
Copper	16.200	mg/kg	D -	9.700	mg/kg	C -	17.000	mg/kg	C -
Cyanide	0.300	mg/kg	D U	0.300	mg/kg	C U	0.290	mg/kg	C U
Iron	20700.000	mg/kg	D -	17900.000	mg/kg	C -	25900.000	mg/kg	C -
Lead	20.900	mg/kg	D -	21.000	mg/kg	C -	15.000	mg/kg	C -
Magnesium	24800.000	mg/kg	D -	12200.000	mg/kg	C -	6000.000	mg/kg	C -
Manganese	743.000	mg/kg	D -	823.000	mg/kg	C -	323.000	mg/kg	C -
Mercury	0.120	mg/kg	D U	0.120	mg/kg	C U	0.100	mg/kg	C U
Molybdenum	2.000	mg/kg	D U	1.700	mg/kg	C U	1.800	mg/kg	C U
Nickel	38.000	mg/kg	D -	26.900	mg/kg	C -	36.400	mg/kg	C -
Potassium	863.000	mg/kg	D -	548.000	mg/kg	C -	866.000	mg/kg	C -
Selenium	0.420	mg/kg	D R	0.430	mg/kg	C R	0.350	mg/kg	C R
Silver	2.000	mg/kg	D U	1.700	mg/kg	C U	1.800	mg/kg	C -
Sodium	187.000	mg/kg	D -	235.000	mg/kg	C -	63.300	mg/kg	C -
Thallium	0.210	mg/kg	D U	0.190	mg/kg	C U	0.190	mg/kg	C -
Vanadium	22.800	mg/kg	D -	23.300	mg/kg	C -	18.100	mg/kg	C -
Zinc	56.600	mg/kg	D J	41.000	mg/kg	C -	66.300	mg/kg	C -
Volatile Organics									
1,1,1-Trichloroethane	6.000	ug/kg	D UJ	6.000	ug/kg	C U	6.000	ug/kg	C U
1,1,2,2-Tetrachloroethane	6.000	ug/kg	D U	6.000	ug/kg	C U	6.000	ug/kg	C U
1,1,2-Trichloroethane	6.000	ug/kg	D U	6.000	ug/kg	C U	6.000	ug/kg	C U
1,1-Dichloroethane	6.000	ug/kg	D U	6.000	ug/kg	C U	6.000	ug/kg	C U
1,1-Dichloroethene	6.000	ug/kg	D U	6.000	ug/kg	C U	6.000	ug/kg	C U
1,2-Dichloroethane	6.000	ug/kg	D U	6.000	ug/kg	C U	6.000	ug/kg	C U
1,2-Dichloroethene	6.000	ug/kg	D UJ	6.000	ug/kg	C U	6.000	ug/kg	C U
1,2-Dichloropropane	6.000	ug/kg	D U	6.000	ug/kg	C U	6.000	ug/kg	C U
2-Butanone	12.000	ug/kg	D UJ	12.000	ug/kg	C U	42.000	ug/kg	C -
2-Hexanone	12.000	ug/kg	D UJ	12.000	ug/kg	C U	12.000	ug/kg	C U
4-Methyl-2-pentanone	12.000	ug/kg	D UJ	12.000	ug/kg	C U	12.000	ug/kg	C U
Acetone	12.000	ug/kg	D UJ	12.000	ug/kg	C U	19.000	ug/kg	C U
Benzene	6.000	ug/kg	D U	6.000	ug/kg	C U	6.000	ug/kg	C U
Bromodichloromethane	6.000	ug/kg	D UJ	6.000	ug/kg	C U	6.000	ug/kg	C U

TABLE F-6A
(Continued)

PHASE I - CHEMICAL PARAMETERS

BORING NUMBER	1465				1468				1471			
SAMPLE NUMBER	055945				055959				055972			
	3.5-3.5				2.5-2.5				4-4			
SAMPLING DATE	11/08/89				11/14/89				11/16/89			
CHEMICAL PARAMETERS	RESULTS	UNITS	L	VQ	RESULTS	UNITS	L	VQ	RESULTS	UNITS	L	VQ
Volatile Organics												
Bromoform	6.000	ug/kg	D	UJ	6.000	ug/kg	C	U	6.000	ug/kg	C	U
Bromomethane	12.000	ug/kg	D	R	12.000	ug/kg	C	U	12.000	ug/kg	C	U
Carbon Tetrachloride	6.000	ug/kg	D	U	6.000	ug/kg	C	U	6.000	ug/kg	C	U
Carbon disulfide	6.000	ug/kg	D	U	6.000	ug/kg	C	U	6.000	ug/kg	C	U
Chlorobenzene	6.000	ug/kg	D	U	6.000	ug/kg	C	U	6.000	ug/kg	C	U
Chloroethane	12.000	ug/kg	D	UJ	12.000	ug/kg	C	U	12.000	ug/kg	C	U
Chloroform	6.000	ug/kg	D	UJ	6.000	ug/kg	C	U	6.000	ug/kg	C	U
Chloromethane	12.000	ug/kg	D	U	12.000	ug/kg	C	U	12.000	ug/kg	C	U
Dibromochloromethane	6.000	ug/kg	D	U	6.000	ug/kg	C	U	6.000	ug/kg	C	U
Ethylbenzene	6.000	ug/kg	D	U	6.000	ug/kg	C	U	6.000	ug/kg	C	U
Methylene chloride	6.000	ug/kg	D	UJ	2.000	ug/kg	C	J	57.000	ug/kg	C	-
Styrene	6.000	ug/kg	D	U	6.000	ug/kg	C	U	6.000	ug/kg	C	U
Tetrachloroethene	6.000	ug/kg	D	U	6.000	ug/kg	C	U	6.000	ug/kg	C	U
Toluene	6.000	ug/kg	D	U	6.000	ug/kg	C	U	6.000	ug/kg	C	U
Trichloroethene	6.000	ug/kg	D	U	6.000	ug/kg	C	U	6.000	ug/kg	C	U
Vinyl Acetate	12.000	ug/kg	D	UJ	12.000	ug/kg	C	U	12.000	ug/kg	C	U
Vinyl chloride	12.000	ug/kg	D	U	12.000	ug/kg	C	U	12.000	ug/kg	C	U
Xylenes, Total	6.000	ug/kg	D	U	6.000	ug/kg	C	U	6.000	ug/kg	C	U
cis-1,3-Dichloropropene	6.000	ug/kg	D	U	6.000	ug/kg	C	U	6.000	ug/kg	C	U
trans-1,3-Dichloropropene	6.000	ug/kg	D	UJ	6.000	ug/kg	C	U	6.000	ug/kg	C	U
Semivolatile Organics												
1,2,4-Trichlorobenzene	400.000	ug/kg	D	U	380.000	ug/kg	C	U	380.000	ug/kg	C	U
1,2-Dichlorobenzene	400.000	ug/kg	D	U	380.000	ug/kg	C	U	380.000	ug/kg	C	U
1,3-Dichlorobenzene	400.000	ug/kg	D	U	380.000	ug/kg	C	U	380.000	ug/kg	C	U
1,4-Dichlorobenzene	400.000	ug/kg	D	U	380.000	ug/kg	C	U	380.000	ug/kg	C	U
2,4,5-Trichlorophenol	1900.000	ug/kg	D	U	1800.000	ug/kg	C	U	1900.000	ug/kg	C	U
2,4,6-Trichlorophenol	400.000	ug/kg	D	U	380.000	ug/kg	C	U	380.000	ug/kg	C	U
2,4-Dichlorophenol	400.000	ug/kg	D	U	380.000	ug/kg	C	U	380.000	ug/kg	C	U
2,4-Dimethylphenol	400.000	ug/kg	D	U	380.000	ug/kg	C	U	380.000	ug/kg	C	U
2,4-Dinitrophenol	1900.000	ug/kg	D	U	1800.000	ug/kg	C	U	1900.000	ug/kg	C	U
2,4-Dinitrotoluene	400.000	ug/kg	D	U	380.000	ug/kg	C	U	380.000	ug/kg	C	U
2,6-Dinitrotoluene	400.000	ug/kg	D	U	380.000	ug/kg	C	U	380.000	ug/kg	C	U
2-Chloronaphthalene	400.000	ug/kg	D	U	380.000	ug/kg	C	U	380.000	ug/kg	C	U
2-Chlorophenol	400.000	ug/kg	D	U	380.000	ug/kg	C	U	380.000	ug/kg	C	U
2-Methylnaphthalene	400.000	ug/kg	D	U	380.000	ug/kg	C	U	380.000	ug/kg	C	U
2-Methylphenol	400.000	ug/kg	D	U	380.000	ug/kg	C	U	380.000	ug/kg	C	U
2-Nitroaniline	1900.000	ug/kg	D	U	1800.000	ug/kg	C	U	1900.000	ug/kg	C	U
2-Nitrophenol	400.000	ug/kg	D	U	380.000	ug/kg	C	U	380.000	ug/kg	C	U
3,3'-Dichlorobenzidine	800.000	ug/kg	D	UJ	760.000	ug/kg	C	U	770.000	ug/kg	C	U
3-Nitroaniline	1900.000	ug/kg	D	U	1800.000	ug/kg	C	U	1900.000	ug/kg	C	U

0653

5174

TABLE F-6A
(Continued)

PHASE I - CHEMICAL PARAMETERS

BORING NUMBER	1465			1468			1471		
SAMPLE NUMBER	055945			055959			055972		
	3.5-3.5			2.5-2.5			4-4		
SAMPLING DATE	11/08/89			11/14/89			11/16/89		
CHEMICAL PARAMETERS	RESULTS	UNITS	L VQ	RESULTS	UNITS	L VQ	RESULTS	UNITS	L VQ
Semivolatile Organics									
4,6-Dinitro-2-methylphenol	1900.000	ug/kg	D U	1800.000	ug/kg	C U	1900.000	ug/kg	C U
4-Bromophenyl phenyl ether	400.000	ug/kg	D U	380.000	ug/kg	C U	380.000	ug/kg	C U
4-Chloro-3-methylphenol	400.000	ug/kg	D U	380.000	ug/kg	C U	380.000	ug/kg	C U
4-Chlorophenylphenyl ether	400.000	ug/kg	D U	380.000	ug/kg	C U	380.000	ug/kg	C U
4-Methylphenol	400.000	ug/kg	D U	380.000	ug/kg	C U	380.000	ug/kg	C U
4-Nitroaniline	1900.000	ug/kg	D UJ	1800.000	ug/kg	C U	1900.000	ug/kg	C U
4-Nitrophenol	1900.000	ug/kg	D U	1800.000	ug/kg	C U	1900.000	ug/kg	C U
Acenaphthene	400.000	ug/kg	D U	380.000	ug/kg	C U	380.000	ug/kg	C U
Acenaphthylene	400.000	ug/kg	D U	380.000	ug/kg	C U	380.000	ug/kg	C U
Anthracene	400.000	ug/kg	D U	380.000	ug/kg	C U	380.000	ug/kg	C U
Benzo(a)anthracene	400.000	ug/kg	D U	380.000	ug/kg	C U	380.000	ug/kg	C U
Benzo(a)pyrene	400.000	ug/kg	D U	380.000	ug/kg	C U	380.000	ug/kg	C U
Benzo(b)fluoranthene	400.000	ug/kg	D U	380.000	ug/kg	C U	380.000	ug/kg	C U
Benzo(g,h,i)perylene	400.000	ug/kg	D U	380.000	ug/kg	C U	380.000	ug/kg	C U
Benzo(k)fluoranthene	400.000	ug/kg	D U	380.000	ug/kg	C U	380.000	ug/kg	C U
Benzoic acid	1900.000	ug/kg	D U	1800.000	ug/kg	C U	1900.000	ug/kg	C U
Benzyl alcohol	400.000	ug/kg	D U	380.000	ug/kg	C U	380.000	ug/kg	C U
Butyl benzyl phthalate	400.000	ug/kg	D U	380.000	ug/kg	C U	380.000	ug/kg	C U
Chrysene	400.000	ug/kg	D U	380.000	ug/kg	C U	380.000	ug/kg	C U
Di-n-butyl phthalate	400.000	ug/kg	D U	380.000	ug/kg	C U	380.000	ug/kg	C U
Di-n-octyl phthalate	400.000	ug/kg	D U	380.000	ug/kg	C U	380.000	ug/kg	C U
Dibenzo(a,h)anthracene	400.000	ug/kg	D U	380.000	ug/kg	C U	380.000	ug/kg	C U
Dibenzofuran	400.000	ug/kg	D U	380.000	ug/kg	C U	380.000	ug/kg	C U
Diethyl phthalate	400.000	ug/kg	D U	380.000	ug/kg	C U	380.000	ug/kg	C U
Dimethyl phthalate	400.000	ug/kg	D U	380.000	ug/kg	C U	380.000	ug/kg	C U
Fluoranthene	400.000	ug/kg	D U	380.000	ug/kg	C U	380.000	ug/kg	C U
Fluorene	400.000	ug/kg	D U	380.000	ug/kg	C U	380.000	ug/kg	C U
Hexachlorobenzene	400.000	ug/kg	D U	380.000	ug/kg	C U	380.000	ug/kg	C U
Hexachlorobutadiene	400.000	ug/kg	D U	380.000	ug/kg	C U	380.000	ug/kg	C U
Hexachlorocyclopentadiene	400.000	ug/kg	D U	380.000	ug/kg	C U	380.000	ug/kg	C U
Hexachloroethane	400.000	ug/kg	D U	380.000	ug/kg	C U	380.000	ug/kg	C U
Indeno(1,2,3-cd)pyrene	400.000	ug/kg	D U	380.000	ug/kg	C U	380.000	ug/kg	C U
Isophorone	400.000	ug/kg	D U	380.000	ug/kg	C U	380.000	ug/kg	C U
Methyl parathion	NA			50.000	ug/kg	C U	50.000	ug/kg	C U
N-Nitroso-di-n-propylamine	400.000	ug/kg	D U	380.000	ug/kg	C U	380.000	ug/kg	C U
N-Nitrosodiphenylamine	400.000	ug/kg	D U	380.000	ug/kg	C U	380.000	ug/kg	C U
Naphthalene	400.000	ug/kg	D U	380.000	ug/kg	C U	380.000	ug/kg	C U
Nitrobenzene	400.000	ug/kg	D U	380.000	ug/kg	C U	380.000	ug/kg	C U
Parathion	NA			50.000	ug/kg	C U	50.000	ug/kg	C U
Pentachlorophenol	1900.000	ug/kg	D U	1800.000	ug/kg	C U	1900.000	ug/kg	C U
Phenanthrene	400.000	ug/kg	D U	380.000	ug/kg	C U	380.000	ug/kg	C U
Phenol	400.000	ug/kg	D U	380.000	ug/kg	C U	380.000	ug/kg	C U

TABLE F-6A
(Continued)

PHASE I - CHEMICAL PARAMETERS

BORING NUMBER	1465			1468			1471		
SAMPLE NUMBER	055945			055959			055972		
	3.5-3.5			2.5-2.5			4-4		
SAMPLING DATE	11/08/89			11/14/89			11/16/89		
CHEMICAL PARAMETERS	RESULTS	UNITS	L VQ	RESULTS	UNITS	L VQ	RESULTS	UNITS	L VQ
Semivolatile Organics									
Pyrene	44.000	ug/kg	D J	380.000	ug/kg	C U	380.000	ug/kg	C U
Sulfotep	NA			50.000	ug/kg	C U	50.000	ug/kg	C U
bis(2-Chloroethoxy)methane	400.000	ug/kg	D U	380.000	ug/kg	C U	380.000	ug/kg	C U
bis(2-Chloroethyl)ether	400.000	ug/kg	D UJ	380.000	ug/kg	C U	380.000	ug/kg	C U
bis(2-Chloroisopropyl) ether	400.000	ug/kg	D U	380.000	ug/kg	C U	380.000	ug/kg	C U
bis(2-Ethylhexyl) phthalate	400.000	ug/kg	D U	40.000	ug/kg	C J	380.000	ug/kg	C U
p-Chloroaniline	400.000	ug/kg	D U	380.000	ug/kg	C U	380.000	ug/kg	C U
Pesticide Organics/PCBs									
4,4'-DDD	19.000	ug/kg	D UJ	180.000	ug/kg	C U	18.000	ug/kg	C U
4,4'-DDE	19.000	ug/kg	D UJ	180.000	ug/kg	C U	18.000	ug/kg	C U
4,4'-DDT	19.000	ug/kg	D UJ	180.000	ug/kg	C U	18.000	ug/kg	C U
Aldrin	9.700	ug/kg	D UJ	92.000	ug/kg	C U	9.200	ug/kg	C U
Aroclor-1016	97.000	ug/kg	D UJ	920.000	ug/kg	C U	92.000	ug/kg	C U
Aroclor-1221	97.000	ug/kg	D UJ	920.000	ug/kg	C U	92.000	ug/kg	C U
Aroclor-1232	97.000	ug/kg	D UJ	920.000	ug/kg	C U	92.000	ug/kg	C U
Aroclor-1242	97.000	ug/kg	D UJ	920.000	ug/kg	C U	92.000	ug/kg	C U
Aroclor-1248	97.000	ug/kg	D UJ	920.000	ug/kg	C U	92.000	ug/kg	C U
Aroclor-1254	190.000	ug/kg	D UJ	710.000	ug/kg	C J	180.000	ug/kg	C U
Aroclor-1260	190.000	ug/kg	D UJ	1800.000	ug/kg	C U	180.000	ug/kg	C U
Dieldrin	19.000	ug/kg	D UJ	180.000	ug/kg	C U	18.000	ug/kg	C U
Dimethoate	NA			50.000	ug/kg	C U	50.000	ug/kg	C U
Disulfoton	NA			50.000	ug/kg	C U	50.000	ug/kg	C U
Endosulfan II	19.000	ug/kg	D UJ	180.000	ug/kg	C U	18.000	ug/kg	C U
Endosulfan sulfate	19.000	ug/kg	D UJ	180.000	ug/kg	C U	18.000	ug/kg	C U
Endosulfan-I	9.700	ug/kg	D UJ	92.000	ug/kg	C U	9.200	ug/kg	C U
Endrin	19.000	ug/kg	D UJ	180.000	ug/kg	C U	18.000	ug/kg	C U
Endrin ketone	19.000	ug/kg	D UJ	180.000	ug/kg	C U	18.000	ug/kg	C U
Famphur	NA			100.000	ug/kg	C U	100.000	ug/kg	C U
Heptachlor	9.700	ug/kg	D UJ	92.000	ug/kg	C U	9.200	ug/kg	C U
Heptachlor epoxide	9.700	ug/kg	D UJ	92.000	ug/kg	C U	9.200	ug/kg	C U
Methoxychlor	97.000	ug/kg	D UJ	920.000	ug/kg	C U	92.000	ug/kg	C U
Phorate	NA			50.000	ug/kg	C U	50.000	ug/kg	C U
Thionazin	NA			50.000	ug/kg	C U	50.000	ug/kg	C U
Toxaphene	190.000	ug/kg	D UJ	1800.000	ug/kg	C U	180.000	ug/kg	C U
alpha-BHC	9.700	ug/kg	D UJ	92.000	ug/kg	C U	9.200	ug/kg	C U
alpha-Chlordane	97.000	ug/kg	D UJ	920.000	ug/kg	C U	92.000	ug/kg	C U
beta-BHC	9.700	ug/kg	D UJ	92.000	ug/kg	C U	9.200	ug/kg	C U
delta-BHC	9.700	ug/kg	D UJ	92.000	ug/kg	C U	9.200	ug/kg	C U
gamma-BHC (Lindane)	9.700	ug/kg	D UJ	92.000	ug/kg	C U	9.200	ug/kg	C U
gamma-Chlordane	97.000	ug/kg	D UJ	920.000	ug/kg	C U	92.000	ug/kg	C U

0555
51174

TABLE F-6A
(Continued)

PHASE I - CHEMICAL PARAMETERS

BORING NUMBER	1474			1792			1792		
SAMPLE NUMBER	055988			067343			067346		
	0-10			1.5-3			6-7.5		
SAMPLING DATE	11/17/89			08/21/91			08/21/91		
CHEMICAL PARAMETERS	RESULTS	UNITS	L VQ	RESULTS	UNITS	L VQ	RESULTS	UNITS	L VQ
Inorganics									
Aluminum	8020.000	mg/kg	C NV	13500.000	mg/kg	D -	4860.000	mg/kg	D -
Antimony	5.400	mg/kg	E NV	7.800	mg/kg	D J	29.700	mg/kg	D J
Arsenic	2.200	mg/kg	E NV	7.600	mg/kg	D -	4.200	mg/kg	D -
Barium	29.400	mg/kg	E NV	123.000	mg/kg	D -	52.500	mg/kg	D -
Beryllium	1.300	mg/kg	E NV	1.000	mg/kg	D -	0.800	mg/kg	D -
Boron	NA			17.100	mg/kg	D -	36.000	mg/kg	D J
Cadmium	5.500	mg/kg	E NV	0.440	mg/kg	D UJ	4.900	mg/kg	D J
Calcium	111000.000	mg/kg	E NV	6430.000	mg/kg	D -	165000.000	mg/kg	D -
Chromium	22.700	mg/kg	E NV	21.000	mg/kg	D -	27.300	mg/kg	D -
Cobalt	10.800	mg/kg	D NV	13.200	mg/kg	D -	10.000	mg/kg	D J
Copper	17.700	mg/kg	D NV	20.300	mg/kg	D -	16.500	mg/kg	D -
Cyanide	0.300	mg/kg	E NV	0.110	mg/kg	D UJ	0.100	mg/kg	D UJ
Iron	13100.000	mg/kg	C NV	29200.000	mg/kg	D -	16200.000	mg/kg	D -
Lead	8.100	mg/kg	C NV	14.300	mg/kg	D -	14.100	mg/kg	D -
Magnesium	41600.000	mg/kg	C NV	3810.000	mg/kg	D -	35300.000	mg/kg	D -
Manganese	323.000	mg/kg	C NV	303.000	mg/kg	D -	361.000	mg/kg	D -
Mercury	0.100	mg/kg	C NV	0.110	mg/kg	D U	0.110	mg/kg	D U
Molybdenum	1.800	mg/kg	C NV	15.800	mg/kg	D -	13.000	mg/kg	D J
Nickel	31.100	mg/kg	C NV	22.700	mg/kg	D -	20.600	mg/kg	D -
Potassium	1640.000	mg/kg	C NV	623.000	mg/kg	D -	642.000	mg/kg	D -
Selenium	0.410	mg/kg	E NV	0.440	mg/kg	D U	0.430	mg/kg	D U
Silicon	NA			636.000	mg/kg	D J	883.000	mg/kg	D J
Silver	1.800	mg/kg	C NV	2.200	mg/kg	D -	16.200	mg/kg	D -
Sodium	199.000	mg/kg	E NV	37.500	mg/kg	D -	166.000	mg/kg	D -
Thallium	0.210	mg/kg	E NV	0.440	mg/kg	D U	0.430	mg/kg	D U
Vanadium	24.800	mg/kg	E NV	32.800	mg/kg	D -	24.900	mg/kg	D -
Zinc	46.700	mg/kg	E NV	56.900	mg/kg	D -	26.900	mg/kg	D -
Volatile Organics									
1,1,1-Trichloroethane	6.000	ug/kg	D U	6.000	ug/kg	D U	5.000	ug/kg	D UJ
1,1,2,2-Tetrachloroethane	6.000	ug/kg	D U	6.000	ug/kg	D U	5.000	ug/kg	D UJ
1,1,2-Trichloroethane	6.000	ug/kg	D U	6.000	ug/kg	D U	5.000	ug/kg	D UJ
1,1-Dichloroethane	6.000	ug/kg	D U	6.000	ug/kg	D U	5.000	ug/kg	D UJ
1,1-Dichloroethene	6.000	ug/kg	D U	6.000	ug/kg	D U	5.000	ug/kg	D UJ
1,2-Dichloroethane	6.000	ug/kg	D U	6.000	ug/kg	D U	5.000	ug/kg	D UJ
1,2-Dichloroethene	6.000	ug/kg	D U	6.000	ug/kg	D U	5.000	ug/kg	D UJ
1,2-Dichloropropane	6.000	ug/kg	D U	6.000	ug/kg	D U	5.000	ug/kg	D UJ
2-Butanone	12.000	ug/kg	D U	11.000	ug/kg	D U	11.000	ug/kg	D UJ
2-Hexanone	12.000	ug/kg	D U	11.000	ug/kg	D U	11.000	ug/kg	D UJ
4-Methyl-2-pentanone	12.000	ug/kg	D U	11.000	ug/kg	D U	11.000	ug/kg	D UJ
Acetone	12.000	ug/kg	D U	11.000	ug/kg	D U	11.000	ug/kg	D UJ

TABLE F-6A
(Continued)

PHASE I - CHEMICAL PARAMETERS

BORING NUMBER	1474			1792			1792		
SAMPLE NUMBER	055988			067343			067346		
	0-10			1.5-3			6-7.5		
SAMPLING DATE	11/17/89			08/21/91			08/21/91		
CHEMICAL PARAMETERS	RESULTS	UNITS	L VQ	RESULTS	UNITS	L VQ	RESULTS	UNITS	L VQ
Volatile Organics									
Benzene	6.000	ug/kg	D U	6.000	ug/kg	D U	5.000	ug/kg	D UJ
Bromodichloromethane	6.000	ug/kg	D U	6.000	ug/kg	D U	5.000	ug/kg	D UJ
Bromoform	6.000	ug/kg	D U	6.000	ug/kg	D U	5.000	ug/kg	D UJ
Bromomethane	12.000	ug/kg	D UJ	11.000	ug/kg	D U	11.000	ug/kg	D UJ
Carbon Tetrachloride	6.000	ug/kg	D U	6.000	ug/kg	D U	5.000	ug/kg	D UJ
Carbon disulfide	6.000	ug/kg	D U	6.000	ug/kg	D U	5.000	ug/kg	D UJ
Chlorobenzene	6.000	ug/kg	D U	6.000	ug/kg	D U	5.000	ug/kg	D UJ
Chloroethane	12.000	ug/kg	D U	11.000	ug/kg	D U	11.000	ug/kg	D UJ
Chloroform	6.000	ug/kg	D U	6.000	ug/kg	D U	5.000	ug/kg	D UJ
Chloromethane	12.000	ug/kg	D U	11.000	ug/kg	D U	11.000	ug/kg	D UJ
Dibromochloromethane	6.000	ug/kg	D U	6.000	ug/kg	D U	5.000	ug/kg	D UJ
Ethylbenzene	6.000	ug/kg	D U	6.000	ug/kg	D U	5.000	ug/kg	D UJ
Methylene chloride	6.000	ug/kg	D U	6.000	ug/kg	D U	5.000	ug/kg	D UJ
Styrene	6.000	ug/kg	D U	6.000	ug/kg	D U	5.000	ug/kg	D UJ
Tetrachloroethene	6.000	ug/kg	D U	6.000	ug/kg	D U	5.000	ug/kg	D UJ
Toluene	6.000	ug/kg	D U	6.000	ug/kg	D U	5.000	ug/kg	D UJ
Trichloroethene	6.000	ug/kg	D U	6.000	ug/kg	D U	5.000	ug/kg	D UJ
Vinyl Acetate	12.000	ug/kg	D U	11.000	ug/kg	D U	11.000	ug/kg	D UJ
Vinyl chloride	12.000	ug/kg	D U	11.000	ug/kg	D U	11.000	ug/kg	D UJ
Xylenes, Total	6.000	ug/kg	D U	6.000	ug/kg	D U	5.000	ug/kg	D UJ
cis-1,3-Dichloropropene	6.000	ug/kg	D U	6.000	ug/kg	D U	5.000	ug/kg	D UJ
trans-1,3-Dichloropropene	6.000	ug/kg	D U	6.000	ug/kg	D U	5.000	ug/kg	D UJ
Semivolatile Organics									
1,2,4-Trichlorobenzene	390.000	ug/kg	D U	370.000	ug/kg	D R	360.000	ug/kg	D R
1,2-Dichlorobenzene	390.000	ug/kg	D U	370.000	ug/kg	D R	360.000	ug/kg	D R
1,3-Dichlorobenzene	390.000	ug/kg	D U	370.000	ug/kg	D R	360.000	ug/kg	D R
1,4-Dichlorobenzene	390.000	ug/kg	D U	370.000	ug/kg	D R	360.000	ug/kg	D R
2,4,5-Trichlorophenol	1900.000	ug/kg	D U	1800.000	ug/kg	D R	1800.000	ug/kg	D R
2,4,6-Trichlorophenol	390.000	ug/kg	D U	370.000	ug/kg	D R	360.000	ug/kg	D R
2,4-Dichlorophenol	390.000	ug/kg	D U	370.000	ug/kg	D R	360.000	ug/kg	D R
2,4-Dimethylphenol	390.000	ug/kg	D U	370.000	ug/kg	D R	360.000	ug/kg	D R
2,4-Dinitrophenol	1900.000	ug/kg	D UJ	1800.000	ug/kg	D R	1800.000	ug/kg	D R
2,4-Dinitrotoluene	390.000	ug/kg	D U	370.000	ug/kg	D R	360.000	ug/kg	D R
2,6-Dinitrotoluene	390.000	ug/kg	D U	370.000	ug/kg	D R	360.000	ug/kg	D R
2-Chloronaphthalene	390.000	ug/kg	D U	370.000	ug/kg	D R	360.000	ug/kg	D R
2-Chlorophenol	390.000	ug/kg	D U	370.000	ug/kg	D R	360.000	ug/kg	D R
2-Methylnaphthalene	390.000	ug/kg	D U	370.000	ug/kg	D R	360.000	ug/kg	D R
2-Methylphenol	390.000	ug/kg	D U	370.000	ug/kg	D R	360.000	ug/kg	D R
2-Nitroaniline	1900.000	ug/kg	D U	1800.000	ug/kg	D R	1800.000	ug/kg	D R
2-Nitrophenol	390.000	ug/kg	D U	370.000	ug/kg	D R	360.000	ug/kg	D R

5174

TABLE F-6A
(Continued)

PHASE I - CHEMICAL PARAMETERS

BORING NUMBER	1474			1792			1792		
SAMPLE NUMBER	055988			067343			067346		
	0-10			1.5-3			6-7.5		
SAMPLING DATE	11/17/89			08/21/91			08/21/91		
CHEMICAL PARAMETERS	RESULTS	UNITS	L VQ	RESULTS	UNITS	L VQ	RESULTS	UNITS	L VQ
Semivolatile Organics									
3,3'-Dichlorobenzidine	780.000	ug/kg	D UJ	750.000	ug/kg	D R	720.000	ug/kg	D R
3-Nitroaniline	1900.000	ug/kg	D U	1800.000	ug/kg	D R	1800.000	ug/kg	D R
4,6-Dinitro-2-methylphenol	1900.000	ug/kg	D UJ	1800.000	ug/kg	D R	1800.000	ug/kg	D R
4-Bromophenyl phenyl ether	390.000	ug/kg	D U	370.000	ug/kg	D R	360.000	ug/kg	D R
4-Chloro-3-methylphenol	390.000	ug/kg	D U	370.000	ug/kg	D R	360.000	ug/kg	D R
4-Chlorophenylphenyl ether	390.000	ug/kg	D U	370.000	ug/kg	D R	360.000	ug/kg	D R
4-Methylphenol	390.000	ug/kg	D U	370.000	ug/kg	D R	360.000	ug/kg	D R
4-Nitroaniline	1900.000	ug/kg	D U	1800.000	ug/kg	D R	1800.000	ug/kg	D R
4-Nitrophenol	1900.000	ug/kg	D U	1800.000	ug/kg	D R	1800.000	ug/kg	D R
Acenaphthene	390.000	ug/kg	D U	370.000	ug/kg	D R	360.000	ug/kg	D R
Acenaphthylene	390.000	ug/kg	D U	370.000	ug/kg	D R	360.000	ug/kg	D R
Anthracene	390.000	ug/kg	D U	370.000	ug/kg	D R	360.000	ug/kg	D R
Benzo(a)anthracene	390.000	ug/kg	D U	370.000	ug/kg	D R	360.000	ug/kg	D R
Benzo(a)pyrene	390.000	ug/kg	D U	370.000	ug/kg	D R	360.000	ug/kg	D R
Benzo(b)fluoranthene	390.000	ug/kg	D U	370.000	ug/kg	D R	360.000	ug/kg	D R
Benzo(g,h,i)perylene	390.000	ug/kg	D U	370.000	ug/kg	D R	360.000	ug/kg	D R
Benzo(k)fluoranthene	390.000	ug/kg	D U	370.000	ug/kg	D R	360.000	ug/kg	D R
Benzoic acid	1900.000	ug/kg	D U	1800.000	ug/kg	D R	47.000	ug/kg	D J
Benzyl alcohol	390.000	ug/kg	D U	370.000	ug/kg	D R	360.000	ug/kg	D R
Butyl benzyl phthalate	390.000	ug/kg	D U	370.000	ug/kg	D R	360.000	ug/kg	D R
Chrysene	390.000	ug/kg	D U	370.000	ug/kg	D R	360.000	ug/kg	D R
Di-n-butyl phthalate	390.000	ug/kg	D U	370.000	ug/kg	D R	360.000	ug/kg	D R
Di-n-octyl phthalate	390.000	ug/kg	D U	370.000	ug/kg	D R	360.000	ug/kg	D R
Dibenzo(a,h)anthracene	390.000	ug/kg	D U	370.000	ug/kg	D R	360.000	ug/kg	D R
Dibenzofuran	390.000	ug/kg	D U	370.000	ug/kg	D R	360.000	ug/kg	D R
Diethyl phthalate	390.000	ug/kg	D U	370.000	ug/kg	D R	360.000	ug/kg	D R
Dimethyl phthalate	390.000	ug/kg	D U	370.000	ug/kg	D R	360.000	ug/kg	D R
Fluoranthene	390.000	ug/kg	D U	370.000	ug/kg	D R	42.000	ug/kg	D J
Fluorene	390.000	ug/kg	D U	370.000	ug/kg	D R	360.000	ug/kg	D R
Hexachlorobenzene	390.000	ug/kg	D U	370.000	ug/kg	D R	360.000	ug/kg	D R
Hexachlorobutadiene	390.000	ug/kg	D U	370.000	ug/kg	D R	360.000	ug/kg	D R
Hexachlorocyclopentadiene	390.000	ug/kg	D UJ	370.000	ug/kg	D R	360.000	ug/kg	D R
Hexachloroethane	390.000	ug/kg	D U	370.000	ug/kg	D R	360.000	ug/kg	D R
Indeno(1,2,3-cd)pyrene	390.000	ug/kg	D U	370.000	ug/kg	D R	360.000	ug/kg	D R
Isophorone	390.000	ug/kg	D U	370.000	ug/kg	D R	360.000	ug/kg	D R
Methyl parathion	50.000	ug/kg	D U	100.000	ug/kg	C U	100.000	ug/kg	C R
N-Nitroso-di-n-propylamine	390.000	ug/kg	D U	370.000	ug/kg	D R	360.000	ug/kg	D R
N-Nitrosodiphenylamine	390.000	ug/kg	D U	370.000	ug/kg	D R	360.000	ug/kg	D R
Naphthalene	390.000	ug/kg	D U	370.000	ug/kg	D R	360.000	ug/kg	D R
Nitrobenzene	390.000	ug/kg	D U	370.000	ug/kg	D R	360.000	ug/kg	D R
O,O,O-Triethylphosphorothioate	NA			100.000	ug/kg	D U	100.000	ug/kg	D U
Parathion	50.000	ug/kg	D U	100.000	ug/kg	C U	100.000	ug/kg	C R

TABLE F-6A
(Continued)

PHASE I - CHEMICAL PARAMETERS

BORING NUMBER	1474			1792			1792		
SAMPLE NUMBER	055988			067343			067346		
	0-10			1.5-3			6-7.5		
SAMPLING DATE	11/17/89			08/21/91			08/21/91		
CHEMICAL PARAMETERS	RESULTS	UNITS	L VQ	RESULTS	UNITS	L VQ	RESULTS	UNITS	L VQ
Semivolatile Organics									
Pentachlorophenol	1900.000	ug/kg	D U	1800.000	ug/kg	D R	1800.000	ug/kg	D R
Phenanthrene	390.000	ug/kg	D U	370.000	ug/kg	D R	360.000	ug/kg	D R
Phenol	390.000	ug/kg	D U	370.000	ug/kg	D R	360.000	ug/kg	D R
Pyrene	390.000	ug/kg	D U	370.000	ug/kg	D R	48.000	ug/kg	D J
Sulfotep	50.000	ug/kg	D U	100.000	ug/kg	C U	100.000	ug/kg	C R
bis(2-Chloroethoxy)methane	390.000	ug/kg	D U	370.000	ug/kg	D R	360.000	ug/kg	D R
bis(2-Chloroethyl)ether	390.000	ug/kg	D U	370.000	ug/kg	D R	360.000	ug/kg	D R
bis(2-Chloroisopropyl) ether	390.000	ug/kg	D U	370.000	ug/kg	D R	360.000	ug/kg	D R
bis(2-Ethylhexyl) phthalate	390.000	ug/kg	D U	370.000	ug/kg	D R	360.000	ug/kg	D R
p-Chloroaniline	390.000	ug/kg	D U	370.000	ug/kg	D R	360.000	ug/kg	D R
Pesticide Organics/PCBs									
4,4'-DDD	18.000	ug/kg	D U	18.000	ug/kg	D U	18.000	ug/kg	D U
4,4'-DDE	18.000	ug/kg	D U	18.000	ug/kg	D U	18.000	ug/kg	D U
4,4'-DDT	18.000	ug/kg	D U	18.000	ug/kg	D U	18.000	ug/kg	D U
Aldrin	9.200	ug/kg	D U	9.100	ug/kg	D U	8.900	ug/kg	D U
Aroclor-1016	92.000	ug/kg	D U	91.000	ug/kg	D U	89.000	ug/kg	D U
Aroclor-1221	92.000	ug/kg	D U	91.000	ug/kg	D U	89.000	ug/kg	D U
Aroclor-1232	92.000	ug/kg	D U	91.000	ug/kg	D U	89.000	ug/kg	D U
Aroclor-1242	92.000	ug/kg	D U	91.000	ug/kg	D U	89.000	ug/kg	D U
Aroclor-1248	92.000	ug/kg	D U	91.000	ug/kg	D U	89.000	ug/kg	D U
Aroclor-1254	180.000	ug/kg	D U	180.000	ug/kg	D U	32.000	ug/kg	D J
Aroclor-1260	180.000	ug/kg	D U	180.000	ug/kg	D U	180.000	ug/kg	D U
Azinphosmethyl	NA			1000.000	ug/kg	C U	1000.000	ug/kg	C U
Demeton	NA			200.000	ug/kg	C U	200.000	ug/kg	C U
Diazinon	NA			100.000	ug/kg	C U	100.000	ug/kg	C R
Dieldrin	18.000	ug/kg	D U	18.000	ug/kg	D U	18.000	ug/kg	D U
Dimethoate	50.000	ug/kg	D U	100.000	ug/kg	C U	100.000	ug/kg	C R
Disulfoton	50.000	ug/kg	D U	100.000	ug/kg	C U	100.000	ug/kg	C R
Endosulfan II	18.000	ug/kg	D U	18.000	ug/kg	D U	18.000	ug/kg	D U
Endosulfan sulfate	18.000	ug/kg	D U	18.000	ug/kg	D U	18.000	ug/kg	D U
Endosulfan-I	9.200	ug/kg	D U	9.100	ug/kg	D U	8.900	ug/kg	D U
Endrin	18.000	ug/kg	D U	18.000	ug/kg	D U	18.000	ug/kg	D U
Endrin ketone	18.000	ug/kg	D U	18.000	ug/kg	D U	18.000	ug/kg	D U
Ethion	NA			100.000	ug/kg	C U	100.000	ug/kg	C R
Famphur	100.000	ug/kg	D U	100.000	ug/kg	C U	100.000	ug/kg	C R
Heptachlor	9.200	ug/kg	D U	9.100	ug/kg	D U	8.900	ug/kg	D U
Heptachlor epoxide	9.200	ug/kg	D U	9.100	ug/kg	D U	8.900	ug/kg	D U
Malathion	NA			100.000	ug/kg	C U	100.000	ug/kg	C R
Methoxychlor	92.000	ug/kg	D U	91.000	ug/kg	D U	89.000	ug/kg	D U
Phorate	50.000	ug/kg	D U	100.000	ug/kg	C U	100.000	ug/kg	C R

0559

TABLE F-6A
(Continued)

PHASE I - CHEMICAL PARAMETERS

BORING NUMBER	1474			1792			1792		
SAMPLE NUMBER	055988			067343			067346		
	0-10			1.5-3			6-7.5		
SAMPLING DATE	11/17/89			08/21/91			08/21/91		
CHEMICAL PARAMETERS	RESULTS	UNITS	L VQ	RESULTS	UNITS	L VQ	RESULTS	UNITS	L VQ
Pesticide Organics/PCBs									
Tetraethylpyrophosphate	NA			400.000	ug/kg	C U	400.000	ug/kg	C R
Thionazin	50.000	ug/kg	D U	100.000	ug/kg	C U	100.000	ug/kg	C U
Toxaphene	180.000	ug/kg	D U	180.000	ug/kg	D U	180.000	ug/kg	D U
alpha-BHC	9.200	ug/kg	D U	9.100	ug/kg	D U	8.900	ug/kg	D U
alpha-Chlordane	92.000	ug/kg	D U	91.000	ug/kg	D U	89.000	ug/kg	D U
beta-BHC	9.200	ug/kg	D U	9.100	ug/kg	D U	8.900	ug/kg	D U
delta-BHC	9.200	ug/kg	D U	9.100	ug/kg	D U	8.900	ug/kg	D U
gamma-BHC (Lindane)	9.200	ug/kg	D U	9.100	ug/kg	D U	8.900	ug/kg	D U
gamma-Chlordane	92.000	ug/kg	D U	91.000	ug/kg	D U	89.000	ug/kg	D U
Dioxin Furan									
1,2,3,4,6,7,8-Heptachlorodibenzo-p-dioxin	NA			0.029	ug/kg	E U	0.032	ug/kg	E U
1,2,3,4,6,7,8-Heptachlorodibenzofuran	NA			0.026	ug/kg	E U	0.055	ug/kg	E U
1,2,3,4,7,8,9-Heptachlorodibenzofuran	NA			0.037	ug/kg	E U	0.075	ug/kg	E U
1,2,3,4,7,8-Hexachlorodibenzo-p-dioxin	NA			0.085	ug/kg	E U	0.110	ug/kg	E U
1,2,3,4,7,8-Hexachlorodibenzofuran	NA			0.044	ug/kg	E U	0.065	ug/kg	E U
1,2,3,6,7,8-Hexachlorodibenzo-p-dioxin	NA			0.065	ug/kg	E U	0.090	ug/kg	E U
1,2,3,6,7,8-Hexachlorodibenzofuran	NA			0.039	ug/kg	E U	0.055	ug/kg	E U
1,2,3,7,8,9-Hexachlorodibenzo-p-dioxin	NA			0.070	ug/kg	E U	0.090	ug/kg	E U
1,2,3,7,8,9-Hexachlorodibenzofuran	NA			0.050	ug/kg	E U	0.075	ug/kg	E U
1,2,3,7,8-Pentachlorodibenzo-p-dioxin	NA			0.060	ug/kg	E U	0.060	ug/kg	E U
1,2,3,7,8-Pentachlorodibenzofuran	NA			0.039	ug/kg	E U	0.025	ug/kg	E U
2,3,4,6,7,8-Hexachlorodibenzofuran	NA			0.046	ug/kg	E U	0.065	ug/kg	E U
2,3,4,7,8-Pentachlorodibenzofuran	NA			0.043	ug/kg	E U	0.027	ug/kg	E U
2,3,7,8-TCDD	NA			0.130	ug/kg	E U	0.096	ug/kg	E U
2,3,7,8-TCDF	NA			0.058	ug/kg	E U	0.060	ug/kg	E U
Heptachlorodibenzo-p-dioxin	NA			0.029	ug/kg	E U	0.032	ug/kg	E U
Heptachlorodibenzofuran	NA			0.030	ug/kg	E U	0.060	ug/kg	E U
Hexachlorodibenzo-p-dioxin	NA			0.070	ug/kg	E U	0.095	ug/kg	E U
Hexachlorodibenzofuran	NA			0.044	ug/kg	E U	0.065	ug/kg	E U
Octachlorodibenzo-p-dioxin	NA			0.180	ug/kg	E -	0.350	ug/kg	E -
Octachlorodibenzofuran	NA			0.037	ug/kg	E U	0.034	ug/kg	E U
Pentachlorodibenzo-p-dioxin	NA			0.060	ug/kg	E U	0.060	ug/kg	E U
Pentachlorodibenzofuran	NA			0.041	ug/kg	E U	0.026	ug/kg	E U
Tetrachlorodibenzo-p-dioxin	NA			0.013	ug/kg	E UJ	0.034	ug/kg	E UJ
Tetrachlorodibenzofuran	NA			0.023	ug/kg	E U	0.018	ug/kg	E -

TABLE F-6A
(Continued)

PHASE I - CHEMICAL PARAMETERS

BORING NUMBER	1792					1792					1792				
SAMPLE NUMBER	067350					067353					067356				
	12-13.5					16.5-18					21.5-23				
SAMPLING DATE	08/21/91					08/22/91					08/22/91				
CHEMICAL PARAMETERS	RESULTS	UNITS	L	VQ		RESULTS	UNITS	L	VQ		RESULTS	UNITS	L	VQ	
Inorganics															
Aluminum	6960.000	mg/kg	D	-		8850.000	mg/kg	D	-		10900.000	mg/kg	D	-	
Antimony	21.400	mg/kg	D	J		18.700	mg/kg	D	J		13.800	mg/kg	D	J	
Arsenic	3.900	mg/kg	D	-		4.500	mg/kg	D	-		4.700	mg/kg	D	-	
Barium	75.800	mg/kg	D	-		77.700	mg/kg	D	-		83.900	mg/kg	D	-	
Beryllium	0.850	mg/kg	D	-		0.930	mg/kg	D	-		0.970	mg/kg	D	-	
Boron	31.100	mg/kg	D	J		31.200	mg/kg	D	J		25.200	mg/kg	D	-	
Cadmium	3.200	mg/kg	D	J		2.900	mg/kg	D	J		1.800	mg/kg	D	J	
Calcium	90400.000	mg/kg	D	-		90700.000	mg/kg	D	-		48800.000	mg/kg	D	-	
Chromium	31.900	mg/kg	D	-		29.100	mg/kg	D	-		27.200	mg/kg	D	-	
Cobalt	11.800	mg/kg	D	J		12.000	mg/kg	D	J		13.400	mg/kg	D	-	
Copper	19.900	mg/kg	D	-		20.000	mg/kg	D	-		21.500	mg/kg	D	-	
Cyanide	0.120	mg/kg	D	UJ		0.120	mg/kg	D	UJ		0.130	mg/kg	D	UJ	
Iron	17700.000	mg/kg	D	-		19000.000	mg/kg	D	-		22800.000	mg/kg	D	-	
Lead	1140.000	mg/kg	D	-		17.100	mg/kg	D	-		16.400	mg/kg	D	-	
Magnesium	25300.000	mg/kg	D	-		23000.000	mg/kg	D	-		15100.000	mg/kg	D	-	
Manganese	429.000	mg/kg	D	-		502.000	mg/kg	D	-		435.000	mg/kg	D	-	
Mercury	0.120	mg/kg	D	U		0.110	mg/kg	D	U		0.120	mg/kg	D	U	
Molybdenum	13.400	mg/kg	D	J		14.100	mg/kg	D	J		14.800	mg/kg	D	-	
Nickel	22.100	mg/kg	D	-		23.900	mg/kg	D	-		24.200	mg/kg	D	-	
Potassium	770.000	mg/kg	D	-		1230.000	mg/kg	D	-		979.000	mg/kg	D	-	
Selenium	0.470	mg/kg	D	U		0.470	mg/kg	D	U		0.480	mg/kg	D	U	
Silicon	941.000	mg/kg	D	J		946.000	mg/kg	D	J		975.000	mg/kg	D	J	
Silver	13.200	mg/kg	D	J		13.300	mg/kg	D	J		9.400	mg/kg	D	-	
Sodium	155.000	mg/kg	D	-		157.000	mg/kg	D	-		114.000	mg/kg	D	-	
Thallium	0.470	mg/kg	D	U		0.470	mg/kg	D	U		0.480	mg/kg	D	U	
Vanadium	27.000	mg/kg	D	-		29.000	mg/kg	D	-		29.900	mg/kg	D	-	
Zinc	53.200	mg/kg	D	-		43.300	mg/kg	D	-		50.900	mg/kg	D	-	
Volatile Organics															
1,1,1-Trichloroethane	6.000	ug/kg	D	UJ		6.000	ug/kg	D	U		6.000	ug/kg	D	UJ	
1,1,2,2-Tetrachloroethane	6.000	ug/kg	D	UJ		6.000	ug/kg	D	U		6.000	ug/kg	D	UJ	
1,1,2-Trichloroethane	6.000	ug/kg	D	UJ		6.000	ug/kg	D	U		6.000	ug/kg	D	UJ	
1,1-Dichloroethane	6.000	ug/kg	D	UJ		6.000	ug/kg	D	U		6.000	ug/kg	D	UJ	
1,1-Dichloroethene	6.000	ug/kg	D	UJ		6.000	ug/kg	D	U		6.000	ug/kg	D	UJ	
1,2-Dichloroethane	6.000	ug/kg	D	UJ		6.000	ug/kg	D	U		6.000	ug/kg	D	UJ	
1,2-Dichloroethene	6.000	ug/kg	D	UJ		6.000	ug/kg	D	U		6.000	ug/kg	D	UJ	
1,2-Dichloropropane	6.000	ug/kg	D	UJ		6.000	ug/kg	D	U		6.000	ug/kg	D	UJ	
2-Butanone	12.000	ug/kg	D	UJ		12.000	ug/kg	D	U		6.000	ug/kg	D	UJ	
2-Hexanone	6.000	ug/kg	D	UJ		6.000	ug/kg	D	U		12.000	ug/kg	D	UJ	
4-Methyl-2-pentanone	12.000	ug/kg	D	UJ		1.000	ug/kg	D	J		3.000	ug/kg	D	J	
Acetone	36.000	ug/kg	D	UJ		36.000	ug/kg	D	-		56.000	ug/kg	D	J	

0561

TABLE F-6A
(Continued)

PHASE I - CHEMICAL PARAMETERS

BORING NUMBER	1792			1792			1792		
SAMPLE NUMBER	067350			067353			067356		
	12-13.5			16.5-18			21.5-23		
SAMPLING DATE	08/21/91			08/22/91			08/22/91		
CHEMICAL PARAMETERS	RESULTS	UNITS	L VQ	RESULTS	UNITS	L VQ	RESULTS	UNITS	L VQ
Volatile Organics									
Benzene	6.000	ug/kg	D UJ	6.000	ug/kg	D U	6.000	ug/kg	D UJ
Bromodichloromethane	6.000	ug/kg	D UJ	6.000	ug/kg	D U	6.000	ug/kg	D UJ
Bromoform	6.000	ug/kg	D UJ	6.000	ug/kg	D U	6.000	ug/kg	D UJ
Bromomethane	12.000	ug/kg	D UJ	12.000	ug/kg	D U	12.000	ug/kg	D UJ
Carbon Tetrachloride	6.000	ug/kg	D UJ	6.000	ug/kg	D U	6.000	ug/kg	D UJ
Carbon disulfide	6.000	ug/kg	D UJ	6.000	ug/kg	D U	6.000	ug/kg	D UJ
Chlorobenzene	6.000	ug/kg	D UJ	6.000	ug/kg	D U	6.000	ug/kg	D UJ
Chloroethane	12.000	ug/kg	D UJ	12.000	ug/kg	D U	12.000	ug/kg	D UJ
Chloroform	6.000	ug/kg	D UJ	6.000	ug/kg	D U	6.000	ug/kg	D UJ
Chloromethane	12.000	ug/kg	D UJ	12.000	ug/kg	D U	12.000	ug/kg	D UJ
Dibromochloromethane	6.000	ug/kg	D UJ	6.000	ug/kg	D U	6.000	ug/kg	D UJ
Ethylbenzene	6.000	ug/kg	D UJ	6.000	ug/kg	D U	6.000	ug/kg	D UJ
Methylene chloride	6.000	ug/kg	D UJ	6.000	ug/kg	D U	11.000	ug/kg	D UJ
Styrene	6.000	ug/kg	D UJ	6.000	ug/kg	D U	6.000	ug/kg	D UJ
Tetrachloroethene	6.000	ug/kg	D UJ	6.000	ug/kg	D U	6.000	ug/kg	D UJ
Toluene	6.000	ug/kg	D UJ	6.000	ug/kg	D U	6.000	ug/kg	D UJ
Trichloroethene	6.000	ug/kg	D UJ	6.000	ug/kg	D U	6.000	ug/kg	D UJ
Vinyl Acetate	12.000	ug/kg	D UJ	12.000	ug/kg	D U	12.000	ug/kg	D UJ
Vinyl chloride	12.000	ug/kg	D UJ	12.000	ug/kg	D U	12.000	ug/kg	D UJ
Xylenes, Total	2.000	ug/kg	D J	1.000	ug/kg	D J	6.000	ug/kg	D UJ
cis-1,3-Dichloropropene	6.000	ug/kg	D UJ	6.000	ug/kg	D U	6.000	ug/kg	D UJ
trans-1,3-Dichloropropene	6.000	ug/kg	D UJ	6.000	ug/kg	D U	6.000	ug/kg	D UJ
Semivolatile Organics									
1,2,4-Trichlorobenzene	390.000	ug/kg	D R	390.000	ug/kg	D R	410.000	ug/kg	D R
1,2-Dichlorobenzene	390.000	ug/kg	D R	390.000	ug/kg	D R	410.000	ug/kg	D R
1,3-Dichlorobenzene	390.000	ug/kg	D R	390.000	ug/kg	D R	410.000	ug/kg	D R
1,4-Dichlorobenzene	390.000	ug/kg	D R	390.000	ug/kg	D R	410.000	ug/kg	D R
2,4,5-Trichlorophenol	1900.000	ug/kg	D R	1900.000	ug/kg	D R	2000.000	ug/kg	D R
2,4,6-Trichlorophenol	390.000	ug/kg	D R	390.000	ug/kg	D R	410.000	ug/kg	D R
2,4-Dichlorophenol	390.000	ug/kg	D R	390.000	ug/kg	D R	410.000	ug/kg	D R
2,4-Dimethylphenol	390.000	ug/kg	D R	390.000	ug/kg	D R	410.000	ug/kg	D R
2,4-Dinitrophenol	1900.000	ug/kg	D R	1900.000	ug/kg	D R	2000.000	ug/kg	D R
2,4-Dinitrotoluene	390.000	ug/kg	D R	390.000	ug/kg	D R	410.000	ug/kg	D R
2,6-Dinitrotoluene	390.000	ug/kg	D R	390.000	ug/kg	D R	410.000	ug/kg	D R
2-Chloronaphthalene	390.000	ug/kg	D R	390.000	ug/kg	D R	410.000	ug/kg	D R
2-Chlorophenol	390.000	ug/kg	D R	390.000	ug/kg	D R	410.000	ug/kg	D R
2-Methylnaphthalene	56.000	ug/kg	D J	390.000	ug/kg	D R	410.000	ug/kg	D R
2-Methylphenol	390.000	ug/kg	D R	390.000	ug/kg	D R	410.000	ug/kg	D R
2-Nitroaniline	1900.000	ug/kg	D R	1900.000	ug/kg	D R	2000.000	ug/kg	D R
2-Nitrophenol	390.000	ug/kg	D R	390.000	ug/kg	D R	410.000	ug/kg	D R

TABLE F-6A
(Continued)

PHASE I - CHEMICAL PARAMETERS

BORING NUMBER	1792			1792			1792		
SAMPLE NUMBER	067350			067353			067356		
	12-13.5			16.5-18			21.5-23		
SAMPLING DATE	08/21/91			08/22/91			08/22/91		
CHEMICAL PARAMETERS	RESULTS	UNITS	L VQ	RESULTS	UNITS	L VQ	RESULTS	UNITS	L VQ
Semivolatile Organics									
3,3'-Dichlorobenzidine	780.000	ug/kg	D R	780.000	ug/kg	D R	820.000	ug/kg	D R
3-Nitroaniline	1900.000	ug/kg	D R	1900.000	ug/kg	D R	2000.000	ug/kg	D R
4,6-Dinitro-2-methylphenol	1900.000	ug/kg	D R	1900.000	ug/kg	D R	2000.000	ug/kg	D R
4-Bromophenyl phenyl ether	390.000	ug/kg	D R	390.000	ug/kg	D R	410.000	ug/kg	D R
4-Chloro-3-methylphenol	390.000	ug/kg	D R	390.000	ug/kg	D R	410.000	ug/kg	D R
4-Chlorophenylphenyl ether	390.000	ug/kg	D R	390.000	ug/kg	D R	410.000	ug/kg	D R
4-Methylphenol	390.000	ug/kg	D R	390.000	ug/kg	D R	410.000	ug/kg	D R
4-Nitroaniline	1900.000	ug/kg	D R	1900.000	ug/kg	D R	2000.000	ug/kg	D R
4-Nitrophenol	1900.000	ug/kg	D R	1900.000	ug/kg	D R	2000.000	ug/kg	D R
Acenaphthene	390.000	ug/kg	D R	390.000	ug/kg	D R	410.000	ug/kg	D R
Acenaphthylene	390.000	ug/kg	D R	390.000	ug/kg	D R	410.000	ug/kg	D R
Anthracene	390.000	ug/kg	D R	390.000	ug/kg	D R	410.000	ug/kg	D R
Benzo(a)anthracene	390.000	ug/kg	D R	390.000	ug/kg	D R	410.000	ug/kg	D R
Benzo(a)pyrene	390.000	ug/kg	D R	390.000	ug/kg	D R	410.000	ug/kg	D R
Benzo(b)fluoranthene	390.000	ug/kg	D R	390.000	ug/kg	D R	410.000	ug/kg	D R
Benzo(g,h,i)perylene	390.000	ug/kg	D R	390.000	ug/kg	D R	410.000	ug/kg	D R
Benzo(k)fluoranthene	390.000	ug/kg	D R	390.000	ug/kg	D R	410.000	ug/kg	D R
Benzoic acid	1900.000	ug/kg	D R	57.000	ug/kg	D J	110.000	ug/kg	D J
Benzyl alcohol	390.000	ug/kg	D R	390.000	ug/kg	D R	410.000	ug/kg	D R
Butyl benzyl phthalate	390.000	ug/kg	D R	390.000	ug/kg	D R	410.000	ug/kg	D R
Chrysene	390.000	ug/kg	D R	390.000	ug/kg	D R	410.000	ug/kg	D R
Di-n-butyl phthalate	390.000	ug/kg	D R	390.000	ug/kg	D R	410.000	ug/kg	D R
Di-n-octyl phthalate	210.000	ug/kg	D J	390.000	ug/kg	D R	410.000	ug/kg	D R
Dibenzo(a,h)anthracene	390.000	ug/kg	D R	390.000	ug/kg	D R	410.000	ug/kg	D R
Dibenzofuran	390.000	ug/kg	D R	390.000	ug/kg	D R	410.000	ug/kg	D R
Diethyl phthalate	390.000	ug/kg	D R	390.000	ug/kg	D R	84.000	ug/kg	D J
Dimethyl phthalate	390.000	ug/kg	D R	390.000	ug/kg	D R	410.000	ug/kg	D R
Fluoranthene	390.000	ug/kg	D R	390.000	ug/kg	D R	410.000	ug/kg	D R
Fluorene	390.000	ug/kg	D R	390.000	ug/kg	D R	410.000	ug/kg	D R
Hexachlorobenzene	390.000	ug/kg	D R	390.000	ug/kg	D R	410.000	ug/kg	D R
Hexachlorobutadiene	390.000	ug/kg	D R	390.000	ug/kg	D R	410.000	ug/kg	D R
Hexachlorocyclopentadiene	390.000	ug/kg	D R	390.000	ug/kg	D R	410.000	ug/kg	D R
Hexachloroethane	390.000	ug/kg	D R	390.000	ug/kg	D R	410.000	ug/kg	D R
Indeno(1,2,3-cd)pyrene	390.000	ug/kg	D R	390.000	ug/kg	D R	410.000	ug/kg	D R
Isophorone	390.000	ug/kg	D R	390.000	ug/kg	D R	410.000	ug/kg	D R
Methyl parathion	100.000	ug/kg	C U	100.000	ug/kg	C U	100.000	ug/kg	C U
N-Nitroso-di-n-propylamine	390.000	ug/kg	D R	390.000	ug/kg	D R	410.000	ug/kg	D R
N-Nitrosodiphenylamine	390.000	ug/kg	D R	390.000	ug/kg	D R	410.000	ug/kg	D R
Naphthalene	390.000	ug/kg	D R	390.000	ug/kg	D R	410.000	ug/kg	D R
Nitrobenzene	390.000	ug/kg	D R	390.000	ug/kg	D R	410.000	ug/kg	D R
O,O,O-Triethylphosphorothioate	100.000	ug/kg	D U	100.000	ug/kg	D U	100.000	ug/kg	D U
Parathion	100.000	ug/kg	C U	100.000	ug/kg	C U	100.000	ug/kg	C U

TABLE F-6A
(Continued)

PHASE I - CHEMICAL PARAMETERS

BORING NUMBER	1792			1792			1792		
SAMPLE NUMBER	067350			067353			067356		
	12-13.5			16.5-18			21.5-23		
SAMPLING DATE	08/21/91			08/22/91			08/22/91		
CHEMICAL PARAMETERS	RESULTS	UNITS	L VQ	RESULTS	UNITS	L VQ	RESULTS	UNITS	L VQ
Semivolatile Organics									
Pentachlorophenol	1900.000	ug/kg	D R	1900.000	ug/kg	D R	2000.000	ug/kg	D R
Phenanthrene	390.000	ug/kg	D R	390.000	ug/kg	D R	410.000	ug/kg	D R
Phenol	390.000	ug/kg	D R	390.000	ug/kg	D R	410.000	ug/kg	D R
Pyrene	51.000	ug/kg	D J	57.000	ug/kg	D J	410.000	ug/kg	D R
Sulfotep	100.000	ug/kg	C U	100.000	ug/kg	C U	100.000	ug/kg	C U
bis(2-Chloroethoxy)methane	390.000	ug/kg	D R	390.000	ug/kg	D R	410.000	ug/kg	D R
bis(2-Chloroethyl)ether	390.000	ug/kg	D R	390.000	ug/kg	D R	410.000	ug/kg	D R
bis(2-Chloroisopropyl) ether	390.000	ug/kg	D R	390.000	ug/kg	D R	410.000	ug/kg	D R
bis(2-Ethylhexyl) phthalate	83.000	ug/kg	D R	390.000	ug/kg	D R	410.000	ug/kg	D R
p-Chloroaniline	390.000	ug/kg	D R	390.000	ug/kg	D R	410.000	ug/kg	D R
Pesticide Organics/PCBs									
4,4'-DDD	19.000	ug/kg	D U	19.000	ug/kg	D U	20.000	ug/kg	D U
4,4'-DDE	19.000	ug/kg	D U	19.000	ug/kg	D U	20.000	ug/kg	D U
4,4'-DDT	19.000	ug/kg	D U	19.000	ug/kg	D U	20.000	ug/kg	D U
Aldrin	9.700	ug/kg	D U	9.700	ug/kg	D U	10.000	ug/kg	D U
Aroclor-1016	97.000	ug/kg	D U	97.000	ug/kg	D U	100.000	ug/kg	D U
Aroclor-1221	97.000	ug/kg	D U	97.000	ug/kg	D U	100.000	ug/kg	D U
Aroclor-1232	97.000	ug/kg	D U	97.000	ug/kg	D U	100.000	ug/kg	D U
Aroclor-1242	97.000	ug/kg	D U	97.000	ug/kg	D U	100.000	ug/kg	D U
Aroclor-1248	97.000	ug/kg	D U	97.000	ug/kg	D U	100.000	ug/kg	D U
Aroclor-1254	100.000	ug/kg	D J	190.000	ug/kg	D U	200.000	ug/kg	D U
Aroclor-1260	190.000	ug/kg	D U	190.000	ug/kg	D U	200.000	ug/kg	D U
Azinphosmethyl	1000.000	ug/kg	C U	1000.000	ug/kg	C U	1000.000	ug/kg	C U
Demeton	200.000	ug/kg	C U	200.000	ug/kg	C U	200.000	ug/kg	C U
Diazinon	100.000	ug/kg	C U	100.000	ug/kg	C U	100.000	ug/kg	C U
Dieldrin	19.000	ug/kg	D U	19.000	ug/kg	D U	20.000	ug/kg	D U
Dimethoate	100.000	ug/kg	C U	100.000	ug/kg	C U	100.000	ug/kg	C U
Disulfoton	100.000	ug/kg	C U	100.000	ug/kg	C U	100.000	ug/kg	C U
Endosulfan II	19.000	ug/kg	D U	19.000	ug/kg	D U	20.000	ug/kg	D U
Endosulfan sulfate	19.000	ug/kg	D U	19.000	ug/kg	D U	20.000	ug/kg	D U
Endosulfan-I	9.700	ug/kg	D U	9.700	ug/kg	D U	10.000	ug/kg	D U
Endrin	19.000	ug/kg	D U	19.000	ug/kg	D U	20.000	ug/kg	D U
Endrin ketone	19.000	ug/kg	D U	19.000	ug/kg	D U	20.000	ug/kg	D U
Ethion	100.000	ug/kg	C U	100.000	ug/kg	C U	100.000	ug/kg	C U
Famphur	100.000	ug/kg	C U	100.000	ug/kg	C U	100.000	ug/kg	C U
Heptachlor	9.700	ug/kg	D U	9.700	ug/kg	D U	10.000	ug/kg	D U
Heptachlor epoxide	9.700	ug/kg	D U	9.700	ug/kg	D U	10.000	ug/kg	D U
Malathion	100.000	ug/kg	C U	100.000	ug/kg	C U	100.000	ug/kg	C U
Methoxychlor	97.000	ug/kg	D U	97.000	ug/kg	D U	100.000	ug/kg	D U
Phorate	100.000	ug/kg	C U	100.000	ug/kg	C U	100.000	ug/kg	C U

TABLE F-6A
(Continued)

PHASE I - CHEMICAL PARAMETERS

BORING NUMBER	1792			1792			1792		
SAMPLE NUMBER	067350			067353			067356		
	12-13.5			16.5-18			21.5-23		
SAMPLING DATE	08/21/91			08/22/91			08/22/91		
CHEMICAL PARAMETERS	RESULTS	UNITS	L VQ	RESULTS	UNITS	L VQ	RESULTS	UNITS	L VQ
Pesticide Organics/PCBs									
Tetraethylpyrophosphate	400.000	ug/kg	C U	400.000	ug/kg	C U	400.000	ug/kg	C U
Thionazin	100.000	ug/kg	C U	100.000	ug/kg	C U	100.000	ug/kg	C U
Toxaphene	190.000	ug/kg	D U	190.000	ug/kg	D U	200.000	ug/kg	D U
alpha-BHC	9.700	ug/kg	D U	9.700	ug/kg	D U	10.000	ug/kg	D U
alpha-Chlordane	97.000	ug/kg	D U	97.000	ug/kg	D U	100.000	ug/kg	D U
beta-BHC	9.700	ug/kg	D U	9.700	ug/kg	D U	10.000	ug/kg	D U
delta-BHC	9.700	ug/kg	D U	9.700	ug/kg	D U	10.000	ug/kg	D U
gamma-BHC (Lindane)	9.700	ug/kg	D U	9.700	ug/kg	D U	10.000	ug/kg	D U
gamma-Chlordane	97.000	ug/kg	D U	97.000	ug/kg	D U	100.000	ug/kg	D U
Dioxin Furan									
1,2,3,4,6,7,8-Heptachlorodibenzo-p-dioxin	0.850	ug/kg	E U	0.160	ug/kg	E U	0.044	ug/kg	E U
1,2,3,4,6,7,8-Heptachlorodibenzofuran	2.500	ug/kg	E U	0.220	ug/kg	E UJ	0.120	ug/kg	E U
1,2,3,4,7,8,9-Heptachlorodibenzofuran	3.500	ug/kg	E U	0.310	ug/kg	E UJ	0.170	ug/kg	E U
1,2,3,4,7,8-Hexachlorodibenzo-p-dioxin	0.370	ug/kg	E U	0.160	ug/kg	E U	0.180	ug/kg	E U
1,2,3,4,7,8-Hexachlorodibenzofuran	0.300	ug/kg	E U	0.250	ug/kg	E U	0.060	ug/kg	E U
1,2,3,6,7,8-Hexachlorodibenzo-p-dioxin	0.290	ug/kg	E U	0.130	ug/kg	E U	0.140	ug/kg	E U
1,2,3,6,7,8-Hexachlorodibenzofuran	0.260	ug/kg	E U	0.220	ug/kg	E U	0.050	ug/kg	E U
1,2,3,7,8,9-Hexachlorodibenzo-p-dioxin	0.310	ug/kg	E U	0.140	ug/kg	E U	0.150	ug/kg	E U
1,2,3,7,8,9-Hexachlorodibenzofuran	1.900	ug/kg	E U	0.290	ug/kg	E U	0.070	ug/kg	E U
1,2,3,7,8-Pentachlorodibenzo-p-dioxin	0.700	ug/kg	E U	0.140	ug/kg	E U	0.060	ug/kg	E UJ
1,2,3,7,8-Pentachlorodibenzofuran	0.180	ug/kg	E U	0.065	ug/kg	E U	0.029	ug/kg	E UJ
2,3,4,6,7,8-Hexachlorodibenzofuran	1.700	ug/kg	E U	0.260	ug/kg	E U	0.060	ug/kg	E U
2,3,4,7,8-Pentachlorodibenzofuran	0.550	ug/kg	E U	0.070	ug/kg	E U	0.032	ug/kg	E UJ
2,3,7,8-TCDD	0.650	ug/kg	E U	0.550	ug/kg	E U	0.360	ug/kg	E U
2,3,7,8-TCDF	0.330	ug/kg	E U	0.200	ug/kg	E U	0.090	ug/kg	E U
Heptachlorodibenzo-p-dioxin	0.850	ug/kg	E U	0.160	ug/kg	E U	0.044	ug/kg	E U
Heptachlorodibenzofuran	2.900	ug/kg	E U	0.250	ug/kg	E UJ	0.140	ug/kg	E U
Hexachlorodibenzo-p-dioxin	0.320	ug/kg	E U	0.140	ug/kg	E U	0.160	ug/kg	E U
Hexachlorodibenzofuran	1.600	ug/kg	E U	0.250	ug/kg	E U	0.060	ug/kg	E U
Octachlorodibenzo-p-dioxin	0.750	ug/kg	E -	1.100	ug/kg	E -	0.120	ug/kg	E J
Octachlorodibenzofuran	1.300	ug/kg	E U	0.090	ug/kg	E UJ	0.080	ug/kg	E UJ
Pentachlorodibenzo-p-dioxin	0.700	ug/kg	E U	0.140	ug/kg	E U	0.060	ug/kg	E UJ
Pentachlorodibenzofuran	0.550	ug/kg	E U	0.070	ug/kg	E U	0.030	ug/kg	E UJ
Tetrachlorodibenzo-p-dioxin	0.120	ug/kg	E UJ	0.030	ug/kg	E U	0.015	ug/kg	E U
Tetrachlorodibenzofuran	0.170	ug/kg	E U	0.049	ug/kg	E UJ	0.033	ug/kg	E UJ

TABLE F-6A
(Continued)

PHASE I - CHEMICAL PARAMETERS

BORING NUMBER	1793			1794			1794		
SAMPLE NUMBER	067333			067324			067328		
	3-4.5			0-1			2-2.5		
SAMPLING DATE	08/15/91			08/13/91			08/13/91		
CHEMICAL PARAMETERS	RESULTS	UNITS	L VQ	RESULTS	UNITS	L VQ	RESULTS	UNITS	L VQ
Inorganics									
Aluminum	13200.000	mg/kg	D -	10100.000	mg/kg	D -	6590.000	mg/kg	D -
Antimony	6.800	mg/kg	D UJ	14.900	mg/kg	D J	22.300	mg/kg	D J
Arsenic	2.900	mg/kg	D -	6.100	mg/kg	D -	4.300	mg/kg	D -
Barium	102.000	mg/kg	D -	173.000	mg/kg	D -	60.800	mg/kg	D -
Beryllium	0.990	mg/kg	D -	1.100	mg/kg	D -	0.870	mg/kg	D -
Cadmium	0.690	mg/kg	D J	1.700	mg/kg	D J	3.400	mg/kg	D J
Calcium	19700.000	mg/kg	D -	42000.000	mg/kg	D -	102000.000	mg/kg	D -
Chromium	22.900	mg/kg	D -	25.800	mg/kg	D -	26.900	mg/kg	D -
Cobalt	12.800	mg/kg	D -	23.200	mg/kg	D -	10.700	mg/kg	D -
Copper	21.300	mg/kg	D -	26.800	mg/kg	D -	19.000	mg/kg	D -
Cyanide	0.120	mg/kg	D U	0.120	mg/kg	D U	0.110	mg/kg	D U
Iron	23900.000	mg/kg	D -	25100.000	mg/kg	D -	16300.000	mg/kg	D -
Lead	16.100	mg/kg	D -	18.200	mg/kg	D -	13.600	mg/kg	D -
Magnesium	6390.000	mg/kg	D -	15100.000	mg/kg	D -	27300.000	mg/kg	D -
Manganese	799.000	mg/kg	D -	1060.000	mg/kg	D -	515.000	mg/kg	D -
Mercury	0.110	mg/kg	D U	0.120	mg/kg	D U	0.310	mg/kg	D -
Molybdenum	14.600	mg/kg	D -	14.900	mg/kg	D -	12.300	mg/kg	D -
Nickel	24.000	mg/kg	D -	28.800	mg/kg	D -	24.600	mg/kg	D -
Potassium	896.000	mg/kg	D -	1020.000	mg/kg	D -	678.000	mg/kg	D -
Selenium	0.450	mg/kg	D U	0.490	mg/kg	D U	0.440	mg/kg	D UJ
Silver	4.700	mg/kg	D -	8.600	mg/kg	D -	13.200	mg/kg	D -
Sodium	74.200	mg/kg	D -	522.000	mg/kg	D -	159.000	mg/kg	D -
Thallium	0.450	mg/kg	D U	0.490	mg/kg	D U	0.440	mg/kg	D U
Vanadium	29.300	mg/kg	D -	34.100	mg/kg	D -	24.700	mg/kg	D -
Zinc	68.100	mg/kg	D -	58.300	mg/kg	D -	37.000	mg/kg	D -
Volatile Organics									
1,1,1-Trichloroethane	5.000	ug/kg	D UJ	6.000	ug/kg	D UJ	5.000	ug/kg	D UJ
1,1,2,2-Tetrachloroethane	5.000	ug/kg	D UJ	6.000	ug/kg	D U	5.000	ug/kg	D U
1,1,2-Trichloroethane	5.000	ug/kg	D UJ	6.000	ug/kg	D U	5.000	ug/kg	D U
1,1-Dichloroethane	5.000	ug/kg	D UJ	6.000	ug/kg	D U	5.000	ug/kg	D U
1,1-Dichloroethene	5.000	ug/kg	D UJ	6.000	ug/kg	D U	5.000	ug/kg	D U
1,2-Dichloroethane	5.000	ug/kg	D UJ	6.000	ug/kg	D UJ	5.000	ug/kg	D UJ
1,2-Dichloroethene	5.000	ug/kg	D UJ	6.000	ug/kg	D U	5.000	ug/kg	D U
1,2-Dichloropropane	5.000	ug/kg	D UJ	6.000	ug/kg	D U	5.000	ug/kg	D U
2-Butanone	11.000	ug/kg	D UJ	12.000	ug/kg	D UJ	11.000	ug/kg	D UJ
2-Hexanone	11.000	ug/kg	D UJ	12.000	ug/kg	D U	11.000	ug/kg	D U
4-Methyl-2-pentanone	11.000	ug/kg	D UJ	12.000	ug/kg	D U	11.000	ug/kg	D U
Acetone	11.000	ug/kg	D UJ	5.000	ug/kg	D J	10.000	ug/kg	D J
Benzene	5.000	ug/kg	D UJ	6.000	ug/kg	D U	5.000	ug/kg	D U
Bromodichloromethane	5.000	ug/kg	D UJ	6.000	ug/kg	D UJ	5.000	ug/kg	D UJ

TABLE F-6A
(Continued)

PHASE I - CHEMICAL PARAMETERS

BORING NUMBER	1793			1794			1794		
SAMPLE NUMBER	067333			067324			067328		
	3-4.5			0-1			2-2.5		
SAMPLING DATE	08/15/91			08/13/91			08/13/91		
CHEMICAL PARAMETERS	RESULTS	UNITS	L VQ	RESULTS	UNITS	L VQ	RESULTS	UNITS	L VQ
Volatile Organics									
Bromoform	5.000	ug/kg	D UJ	6.000	ug/kg	D U	5.000	ug/kg	D U
Bromomethane	11.000	ug/kg	D UJ	12.000	ug/kg	D U	11.000	ug/kg	D U
Carbon Tetrachloride	5.000	ug/kg	D UJ	6.000	ug/kg	D UJ	5.000	ug/kg	D UJ
Carbon disulfide	5.000	ug/kg	D UJ	6.000	ug/kg	D U	5.000	ug/kg	D U
Chlorobenzene	5.000	ug/kg	D UJ	6.000	ug/kg	D U	5.000	ug/kg	D U
Chloroethane	11.000	ug/kg	D UJ	12.000	ug/kg	D U	11.000	ug/kg	D U
Chloroform	5.000	ug/kg	D UJ	6.000	ug/kg	D U	5.000	ug/kg	D U
Chloromethane	11.000	ug/kg	D UJ	12.000	ug/kg	D U	11.000	ug/kg	D U
Dibromochloromethane	5.000	ug/kg	D UJ	6.000	ug/kg	D UJ	5.000	ug/kg	D UJ
Ethylbenzene	5.000	ug/kg	D UJ	6.000	ug/kg	D U	5.000	ug/kg	D U
Methylene chloride	34.000	ug/kg	D UJ	10.000	ug/kg	D U	6.000	ug/kg	D U
Styrene	5.000	ug/kg	D UJ	6.000	ug/kg	D U	5.000	ug/kg	D U
Tetrachloroethene	5.000	ug/kg	D UJ	6.000	ug/kg	D U	5.000	ug/kg	D U
Toluene	5.000	ug/kg	D UJ	6.000	ug/kg	D U	5.000	ug/kg	D UJ
Trichloroethene	5.000	ug/kg	D UJ	6.000	ug/kg	D U	5.000	ug/kg	D U
Vinyl Acetate	11.000	ug/kg	D UJ	12.000	ug/kg	D U	11.000	ug/kg	D U
Vinyl chloride	11.000	ug/kg	D UJ	12.000	ug/kg	D U	11.000	ug/kg	D U
Xylenes, Total	5.000	ug/kg	D UJ	6.000	ug/kg	D U	5.000	ug/kg	D U
cis-1,3-Dichloropropene	5.000	ug/kg	D UJ	6.000	ug/kg	D UJ	5.000	ug/kg	D UJ
trans-1,3-Dichloropropene	5.000	ug/kg	D UJ	6.000	ug/kg	D UJ	5.000	ug/kg	D UJ
Semivolatile Organics									
1,2,4-Trichlorobenzene	360.000	ug/kg	D U	380.000	ug/kg	D U	390.000	ug/kg	D U
1,2-Dichlorobenzene	360.000	ug/kg	D U	380.000	ug/kg	D U	390.000	ug/kg	D U
1,3-Dichlorobenzene	360.000	ug/kg	D U	380.000	ug/kg	D U	390.000	ug/kg	D U
1,4-Dichlorobenzene	360.000	ug/kg	D U	380.000	ug/kg	D U	390.000	ug/kg	D U
2,4,5-Trichlorophenol	1700.000	ug/kg	D U	1800.000	ug/kg	D U	1900.000	ug/kg	D U
2,4,6-Trichlorophenol	360.000	ug/kg	D U	380.000	ug/kg	D U	390.000	ug/kg	D U
2,4-Dichlorophenol	360.000	ug/kg	D U	380.000	ug/kg	D U	390.000	ug/kg	D U
2,4-Dimethylphenol	360.000	ug/kg	D U	380.000	ug/kg	D U	390.000	ug/kg	D U
2,4-Dinitrophenol	1700.000	ug/kg	D U	1800.000	ug/kg	D U	1900.000	ug/kg	D U
2,4-Dinitrotoluene	360.000	ug/kg	D U	380.000	ug/kg	D U	390.000	ug/kg	D U
2,6-Dinitrotoluene	360.000	ug/kg	D U	380.000	ug/kg	D U	390.000	ug/kg	D U
2-Chloronaphthalene	360.000	ug/kg	D U	380.000	ug/kg	D U	390.000	ug/kg	D U
2-Chlorophenol	360.000	ug/kg	D U	380.000	ug/kg	D U	390.000	ug/kg	D U
2-Methylnaphthalene	360.000	ug/kg	D U	380.000	ug/kg	D U	390.000	ug/kg	D U
2-Methylphenol	360.000	ug/kg	D U	380.000	ug/kg	D U	390.000	ug/kg	D U
2-Nitroaniline	1700.000	ug/kg	D U	1800.000	ug/kg	D U	1900.000	ug/kg	D UJ
2-Nitrophenol	360.000	ug/kg	D U	380.000	ug/kg	D U	390.000	ug/kg	D U
3,3'-Dichlorobenzidine	720.000	ug/kg	D UJ	750.000	ug/kg	D UJ	780.000	ug/kg	D UJ
3-Nitroaniline	1700.000	ug/kg	D UJ	1800.000	ug/kg	D UJ	1900.000	ug/kg	D R

TABLE F-6A
(Continued)

PHASE I - CHEMICAL PARAMETERS

BORING NUMBER	1793			1794			1794		
SAMPLE NUMBER	067333			067324			067328		
	3-4.5			0-1			2-2.5		
SAMPLING DATE	08/15/91			08/13/91			08/13/91		
CHEMICAL PARAMETERS	RESULTS	UNITS	L VQ	RESULTS	UNITS	L VQ	RESULTS	UNITS	L VQ
Semivolatile Organics									
4,6-Dinitro-2-methylphenol	1700.000	ug/kg	D U	1800.000	ug/kg	D U	1900.000	ug/kg	D U
4-Bromophenyl phenyl ether	360.000	ug/kg	D U	380.000	ug/kg	D U	390.000	ug/kg	D U
4-Chloro-3-methylphenol	360.000	ug/kg	D U	380.000	ug/kg	D U	390.000	ug/kg	D U
4-Chlorophenylphenyl ether	360.000	ug/kg	D U	380.000	ug/kg	D U	390.000	ug/kg	D U
4-Methylphenol	360.000	ug/kg	D U	380.000	ug/kg	D U	390.000	ug/kg	D U
4-Nitroaniline	1700.000	ug/kg	D UJ	1800.000	ug/kg	D UJ	1900.000	ug/kg	D UJ
4-Nitrophenol	1700.000	ug/kg	D U	1800.000	ug/kg	D U	1900.000	ug/kg	D UJ
Acenaphthene	360.000	ug/kg	D U	380.000	ug/kg	D U	390.000	ug/kg	D U
Acenaphthylene	360.000	ug/kg	D U	380.000	ug/kg	D U	390.000	ug/kg	D U
Anthracene	360.000	ug/kg	D U	380.000	ug/kg	D U	390.000	ug/kg	D U
Benzo(a)anthracene	360.000	ug/kg	D U	100.000	ug/kg	D J	78.000	ug/kg	D J
Benzo(a)pyrene	360.000	ug/kg	D U	46.000	ug/kg	D J	390.000	ug/kg	D U
Benzo(b)fluoranthene	360.000	ug/kg	D U	140.000	ug/kg	D J	88.000	ug/kg	D J
Benzo(g,h,i)perylene	360.000	ug/kg	D U	45.000	ug/kg	D J	390.000	ug/kg	D U
Benzo(k)fluoranthene	360.000	ug/kg	D U	380.000	ug/kg	D U	390.000	ug/kg	D U
Benzoic acid	150.000	ug/kg	D J	66.000	ug/kg	D J	1900.000	ug/kg	D UJ
Benzyl alcohol	360.000	ug/kg	D U	380.000	ug/kg	D U	390.000	ug/kg	D U
Butyl benzyl phthalate	360.000	ug/kg	D U	380.000	ug/kg	D U	390.000	ug/kg	D U
Chrysene	360.000	ug/kg	D U	82.000	ug/kg	D J	70.000	ug/kg	D J
Di-n-butyl phthalate	360.000	ug/kg	D U	380.000	ug/kg	D U	390.000	ug/kg	D U
Di-n-octyl phthalate	360.000	ug/kg	D U	380.000	ug/kg	D U	390.000	ug/kg	D U
Dibenzo(a,h)anthracene	360.000	ug/kg	D U	380.000	ug/kg	D U	390.000	ug/kg	D U
Dibenzofuran	360.000	ug/kg	D U	NA			390.000	ug/kg	D U
Diethyl phthalate	360.000	ug/kg	D U	380.000	ug/kg	D U	390.000	ug/kg	D U
Dimethyl phthalate	360.000	ug/kg	D U	380.000	ug/kg	D U	390.000	ug/kg	D U
Fluoranthene	360.000	ug/kg	D U	170.000	ug/kg	D J	150.000	ug/kg	D J
Fluorene	360.000	ug/kg	D U	380.000	ug/kg	D U	390.000	ug/kg	D U
Hexachlorobenzene	360.000	ug/kg	D U	380.000	ug/kg	D U	390.000	ug/kg	D U
Hexachlorobutadiene	360.000	ug/kg	D U	380.000	ug/kg	D U	390.000	ug/kg	D U
Hexachlorocyclopentadiene	360.000	ug/kg	D U	380.000	ug/kg	D U	390.000	ug/kg	D U
Hexachloroethane	360.000	ug/kg	D U	380.000	ug/kg	D U	390.000	ug/kg	D UJ
Indeno(1,2,3-cd)pyrene	360.000	ug/kg	D U	380.000	ug/kg	D U	390.000	ug/kg	D U
Isophorone	360.000	ug/kg	D U	380.000	ug/kg	D U	390.000	ug/kg	D U
Methyl parathion	100.000	ug/kg	C U	100.000	ug/kg	C U	100.000	ug/kg	C U
N-Nitroso-di-n-propylamine	360.000	ug/kg	D U	380.000	ug/kg	D U	390.000	ug/kg	D U
N-Nitrosodiphenylamine	360.000	ug/kg	D U	380.000	ug/kg	D U	390.000	ug/kg	D U
Naphthalene	360.000	ug/kg	D U	380.000	ug/kg	D U	390.000	ug/kg	D U
Nitrobenzene	360.000	ug/kg	D UJ	380.000	ug/kg	D UJ	390.000	ug/kg	D U
O,O,O-Triethylphosphorothioate	100.000	ug/kg	D U	100.000	ug/kg	D U	100.000	ug/kg	D U
Parathion	100.000	ug/kg	C U	100.000	ug/kg	C U	100.000	ug/kg	C U
Pentachlorophenol	1700.000	ug/kg	D U	1800.000	ug/kg	D U	1900.000	ug/kg	D U
Phenanthrene	360.000	ug/kg	D U	96.000	ug/kg	D J	93.000	ug/kg	D J

TABLE F-6A
(Continued)

PHASE I - CHEMICAL PARAMETERS

BORING NUMBER	1793			1794			1794		
SAMPLE NUMBER	067333			067324			067328		
	3-4.5			0-1			2-2.5		
SAMPLING DATE	08/15/91			08/13/91			08/13/91		
CHEMICAL PARAMETERS	RESULTS	UNITS	L VQ	RESULTS	UNITS	L VQ	RESULTS	UNITS	L VQ
Semivolatile Organics									
Phenol	360.000	ug/kg	D U	380.000	ug/kg	D U	390.000	ug/kg	D U
Pyrene	360.000	ug/kg	D U	170.000	ug/kg	D J	140.000	ug/kg	D J
Sulfotep	100.000	ug/kg	C U	100.000	ug/kg	C U	100.000	ug/kg	C U
bis(2-Chloroethoxy)methane	360.000	ug/kg	D U	380.000	ug/kg	D U	390.000	ug/kg	D U
bis(2-Chloroethyl)ether	360.000	ug/kg	D U	380.000	ug/kg	D U	390.000	ug/kg	D U
bis(2-Chloroisopropyl) ether	360.000	ug/kg	D UJ	380.000	ug/kg	D UJ	390.000	ug/kg	D U
bis(2-Ethylhexyl) phthalate	360.000	ug/kg	D U	380.000	ug/kg	D U	390.000	ug/kg	D U
p-Chloroaniline	360.000	ug/kg	D U	380.000	ug/kg	D U	390.000	ug/kg	D UJ
Pesticide Organics/PCBs									
4,4'-DDD	19.000	ug/kg	D U	21.000	ug/kg	D U	19.000	ug/kg	D U
4,4'-DDE	19.000	ug/kg	D U	21.000	ug/kg	D U	19.000	ug/kg	D U
4,4'-DDT	19.000	ug/kg	D U	21.000	ug/kg	D U	19.000	ug/kg	D U
Aldrin	9.400	ug/kg	D U	10.000	ug/kg	D U	9.400	ug/kg	D U
Aroclor-1016	94.000	ug/kg	D U	100.000	ug/kg	D U	94.000	ug/kg	D U
Aroclor-1221	94.000	ug/kg	D U	100.000	ug/kg	D U	94.000	ug/kg	D U
Aroclor-1232	94.000	ug/kg	D U	100.000	ug/kg	D U	94.000	ug/kg	D U
Aroclor-1242	94.000	ug/kg	D U	100.000	ug/kg	D U	94.000	ug/kg	D U
Aroclor-1248	94.000	ug/kg	D U	100.000	ug/kg	D U	94.000	ug/kg	D U
Aroclor-1254	740.000	ug/kg	D -	210.000	ug/kg	D U	190.000	ug/kg	D U
Aroclor-1260	190.000	ug/kg	D U	210.000	ug/kg	D U	190.000	ug/kg	D U
Azinphosmethyl	200.000	ug/kg	C U	200.000	ug/kg	C U	200.000	ug/kg	C U
Demeton	200.000	ug/kg	C U	200.000	ug/kg	C U	200.000	ug/kg	C U
Diazinon	100.000	ug/kg	C U	100.000	ug/kg	C U	100.000	ug/kg	C U
Dieldrin	19.000	ug/kg	D U	21.000	ug/kg	D U	19.000	ug/kg	D U
Dimethoate	100.000	ug/kg	C U	100.000	ug/kg	C U	100.000	ug/kg	C U
Disulfoton	100.000	ug/kg	C U	100.000	ug/kg	C U	100.000	ug/kg	C U
Endosulfan II	19.000	ug/kg	D U	21.000	ug/kg	D U	19.000	ug/kg	D U
Endosulfan sulfate	19.000	ug/kg	D U	21.000	ug/kg	D U	19.000	ug/kg	D U
Endosulfan-I	9.400	ug/kg	D U	10.000	ug/kg	D U	9.400	ug/kg	D U
Endrin	19.000	ug/kg	D U	21.000	ug/kg	D U	19.000	ug/kg	D U
Endrin ketone	19.000	ug/kg	D U	21.000	ug/kg	D U	19.000	ug/kg	D U
Ethion	100.000	ug/kg	C U	100.000	ug/kg	C U	100.000	ug/kg	C U
Famphur	100.000	ug/kg	C U	100.000	ug/kg	C U	100.000	ug/kg	C U
Heptachlor	9.400	ug/kg	D U	10.000	ug/kg	D U	9.400	ug/kg	D U
Heptachlor epoxide	9.400	ug/kg	D U	10.000	ug/kg	D U	9.400	ug/kg	D U
Malathion	100.000	ug/kg	C U	100.000	ug/kg	C U	100.000	ug/kg	C U
Methoxychlor	94.000	ug/kg	D U	100.000	ug/kg	D U	94.000	ug/kg	D U
Phorate	100.000	ug/kg	C U	100.000	ug/kg	C U	100.000	ug/kg	C U
Tetraethylpyrophosphate	400.000	ug/kg	C U	400.000	ug/kg	C U	400.000	ug/kg	C U
Thionazin	100.000	ug/kg	C U	100.000	ug/kg	C U	100.000	ug/kg	C U

TABLE F-6A
(Continued)

PHASE I - CHEMICAL PARAMETERS

BORING NUMBER	1793			1794			1794		
SAMPLE NUMBER	067333			067324			067328		
	3-4.5			0-1			2-2.5		
SAMPLING DATE	08/15/91			08/13/91			08/13/91		
CHEMICAL PARAMETERS	RESULTS	UNITS	L VQ	RESULTS	UNITS	L VQ	RESULTS	UNITS	L VQ
Pesticide Organics/PCBs									
Toxaphene	190.000	ug/kg	D U	210.000	ug/kg	D U	190.000	ug/kg	D U
alpha-BHC	9.400	ug/kg	D U	10.000	ug/kg	D U	9.400	ug/kg	D U
alpha-Chlordane	94.000	ug/kg	D U	100.000	ug/kg	D U	94.000	ug/kg	D U
beta-BHC	9.400	ug/kg	D U	10.000	ug/kg	D U	9.400	ug/kg	D U
delta-BHC	9.400	ug/kg	D U	10.000	ug/kg	D U	9.400	ug/kg	D U
gamma-BHC (Lindane)	9.400	ug/kg	D U	10.000	ug/kg	D U	9.400	ug/kg	D U
gamma-Chlordane	94.000	ug/kg	D U	100.000	ug/kg	D U	94.000	ug/kg	D U
Dioxin Furan									
1,2,3,4,6,7,8-Heptachlorodibenzo-p-dioxin	0.150	ug/kg	E U	0.130	ug/kg	E U	0.048	ug/kg	E U
1,2,3,4,6,7,8-Heptachlorodibenzofuran	0.090	ug/kg	E U	0.070	ug/kg	E UJ	0.080	ug/kg	E UJ
1,2,3,4,7,8,9-Heptachlorodibenzofuran	0.130	ug/kg	E U	0.095	ug/kg	E UJ	0.120	ug/kg	E UJ
1,2,3,4,7,8-Hexachlorodibenzo-p-dioxin	0.049	ug/kg	E U	0.140	ug/kg	E U	0.090	ug/kg	E U
1,2,3,4,7,8-Hexachlorodibenzofuran	0.080	ug/kg	E U	0.130	ug/kg	E U	0.070	ug/kg	E U
1,2,3,6,7,8-Hexachlorodibenzo-p-dioxin	0.039	ug/kg	E U	0.110	ug/kg	E U	0.070	ug/kg	E U
1,2,3,6,7,8-Hexachlorodibenzofuran	0.070	ug/kg	E U	0.120	ug/kg	E U	0.065	ug/kg	E U
1,2,3,7,8,9-Hexachlorodibenzo-p-dioxin	0.041	ug/kg	E U	0.120	ug/kg	E U	0.075	ug/kg	E U
1,2,3,7,8,9-Hexachlorodibenzofuran	0.090	ug/kg	E U	0.150	ug/kg	E U	0.085	ug/kg	E U
1,2,3,7,8-Pentachlorodibenzo-p-dioxin	0.055	ug/kg	E UJ	0.060	ug/kg	E U	0.065	ug/kg	E U
1,2,3,7,8-Pentachlorodibenzofuran	0.033	ug/kg	E UJ	0.024	ug/kg	E U	0.055	ug/kg	E U
2,3,4,6,7,8-Hexachlorodibenzofuran	0.080	ug/kg	E U	0.140	ug/kg	E U	0.075	ug/kg	E U
2,3,4,7,8-Pentachlorodibenzofuran	0.036	ug/kg	E UJ	0.026	ug/kg	E U	0.060	ug/kg	E U
2,3,7,8-TCDD	0.110	ug/kg	E U	0.160	ug/kg	E U	0.100	ug/kg	E U
2,3,7,8-TCDF	0.090	ug/kg	E U	0.140	ug/kg	E U	0.055	ug/kg	E U
Heptachlorodibenzo-p-dioxin	0.150	ug/kg	E U	0.130	ug/kg	E UJ	0.048	ug/kg	E U
Heptachlorodibenzofuran	0.110	ug/kg	E U	0.080	ug/kg	E UJ	0.095	ug/kg	E UJ
Hexachlorodibenzo-p-dioxin	0.042	ug/kg	E U	0.120	ug/kg	E U	0.075	ug/kg	E U
Hexachlorodibenzofuran	0.080	ug/kg	E U	0.130	ug/kg	E U	0.075	ug/kg	E U
Octachlorodibenzo-p-dioxin	0.650	ug/kg	E -	0.600	ug/kg	E -	1.500	ug/kg	E -
Octachlorodibenzofuran	0.130	ug/kg	E U	0.150	ug/kg	E U	0.095	ug/kg	E U
Pentachlorodibenzo-p-dioxin	0.055	ug/kg	E UJ	0.060	ug/kg	E U	0.065	ug/kg	E U
Pentachlorodibenzofuran	0.034	ug/kg	E UJ	0.025	ug/kg	E U	0.055	ug/kg	E U
Tetrachlorodibenzo-p-dioxin	0.024	ug/kg	E U	0.019	ug/kg	E U	0.019	ug/kg	E U
Tetrachlorodibenzofuran	0.035	ug/kg	E UJ	0.029	ug/kg	E U	0.055	ug/kg	E U

TABLE F-6A
(Continued)

PHASE I - CHEMICAL PARAMETERS

BORING NUMBER	1795			1795		
SAMPLE NUMBER	067367			067370		
	0-1			3-4		
SAMPLING DATE	08/23/91			08/23/91		
CHEMICAL PARAMETERS	RESULTS	UNITS	L VQ	RESULTS	UNITS	L VQ
Inorganics						
Aluminum	10900.000	mg/kg	D -	12200.000	mg/kg	D -
Antimony	10.200	mg/kg	D J	7.900	mg/kg	D J
Arsenic	4.000	mg/kg	D -	6.900	mg/kg	D -
Barium	NA			159.000	mg/kg	D -
Beryllium	0.770	mg/kg	D -	0.820	mg/kg	D -
Boron	23.100	mg/kg	D U	22.700	mg/kg	D U
Cadmium	1.500	mg/kg	D J	0.450	mg/kg	D UJ
Calcium	31500.000	mg/kg	D -	3720.000	mg/kg	D -
Chromium	24.700	mg/kg	D -	20.800	mg/kg	D -
Cobalt	13.200	mg/kg	D -	14.400	mg/kg	D -
Copper	18.000	mg/kg	D -	21.300	mg/kg	D -
Cyanide	0.110	mg/kg	D UJ	2.600	mg/kg	D -
Iron	20000.000	mg/kg	D -	24500.000	mg/kg	D -
Lead	10.500	mg/kg	D -	12.200	mg/kg	D -
Magnesium	9930.000	mg/kg	D -	4160.000	mg/kg	D -
Manganese	358.000	mg/kg	D -	380.000	mg/kg	D -
Mercury	0.120	mg/kg	D UJ	0.110	mg/kg	D UJ
Molybdenum	14.500	mg/kg	D -	15.500	mg/kg	D -
Nickel	21.800	mg/kg	D -	28.400	mg/kg	D -
Potassium	925.000	mg/kg	D -	696.000	mg/kg	D -
Selenium	0.450	mg/kg	D U	0.450	mg/kg	D U
Silicon	1530.000	mg/kg	D J	685.000	mg/kg	D J
Silver	NA			2.500	mg/kg	D -
Sodium	101.000	mg/kg	D U	76.600	mg/kg	D U
Thallium	0.450	mg/kg	D U	0.450	mg/kg	D U
Vanadium	26.300	mg/kg	D -	25.700	mg/kg	D -
Zinc	48.400	mg/kg	D -	59.000	mg/kg	D -
Volatile Organics						
1,1,1-Trichloroethane	6.000	ug/kg	D U	6.000	ug/kg	D U
1,1,2,2-Tetrachloroethane	6.000	ug/kg	D U	6.000	ug/kg	D U
1,1,2-Trichloroethane	6.000	ug/kg	D U	6.000	ug/kg	D U
1,1-Dichloroethane	6.000	ug/kg	D U	6.000	ug/kg	D U
1,1-Dichloroethene	6.000	ug/kg	D U	6.000	ug/kg	D U
1,2-Dichloroethane	6.000	ug/kg	D U	6.000	ug/kg	D U
1,2-Dichloroethene	6.000	ug/kg	D U	6.000	ug/kg	D U
1,2-Dichloropropane	6.000	ug/kg	D U	6.000	ug/kg	D U
2-Butanone	11.000	ug/kg	D UJ	11.000	ug/kg	D UJ
2-Hexanone	11.000	ug/kg	D UJ	11.000	ug/kg	D UJ
4-Methyl-2-pentanone	11.000	ug/kg	D UJ	11.000	ug/kg	D UJ
Acetone	5.000	ug/kg	D J	5.000	ug/kg	D J

0571

5174

TABLE F-6A
(Continued)

PHASE I - CHEMICAL PARAMETERS

BORING NUMBER	1795				1795			
SAMPLE NUMBER	067367				067370			
	0-1				3-4			
SAMPLING DATE	08/23/91				08/23/91			
CHEMICAL PARAMETERS	RESULTS	UNITS	L	VQ	RESULTS	UNITS	L	VQ
Volatile Organics								
Benzene	6.000	ug/kg	D	U	6.000	ug/kg	D	U
Bromodichloromethane	6.000	ug/kg	D	U	6.000	ug/kg	D	U
Bromoform	6.000	ug/kg	D	U	6.000	ug/kg	D	U
Bromomethane	11.000	ug/kg	D	U	11.000	ug/kg	D	U
Carbon Tetrachloride	6.000	ug/kg	D	UJ	6.000	ug/kg	D	UJ
Carbon disulfide	6.000	ug/kg	D	U	6.000	ug/kg	D	U
Chlorobenzene	6.000	ug/kg	D	U	6.000	ug/kg	D	U
Chloroethane	11.000	ug/kg	D	U	11.000	ug/kg	D	U
Chloroform	6.000	ug/kg	D	U	6.000	ug/kg	D	U
Chloromethane	11.000	ug/kg	D	U	11.000	ug/kg	D	U
Dibromochloromethane	6.000	ug/kg	D	U	6.000	ug/kg	D	U
Ethylbenzene	6.000	ug/kg	D	U	6.000	ug/kg	D	U
Methylene chloride	9.000	ug/kg	D	UJ	7.000	ug/kg	D	UJ
Pyridine	NA				NA			
Styrene	6.000	ug/kg	D	U	6.000	ug/kg	D	U
Tetrachloroethene	6.000	ug/kg	D	U	6.000	ug/kg	D	U
Toluene	6.000	ug/kg	D	U	6.000	ug/kg	D	U
Trichloroethene	6.000	ug/kg	D	U	6.000	ug/kg	D	U
Vinyl Acetate	11.000	ug/kg	D	U	11.000	ug/kg	D	U
Vinyl chloride	11.000	ug/kg	D	UJ	11.000	ug/kg	D	UJ
Xylenes, Total	6.000	ug/kg	D	U	6.000	ug/kg	D	U
cis-1,3-Dichloropropene	6.000	ug/kg	D	U	6.000	ug/kg	D	U
trans-1,3-Dichloropropene	6.000	ug/kg	D	U	6.000	ug/kg	D	U
Semivolatile Organics								
1,2,4-Trichlorobenzene	390.000	ug/kg	D	U	380.000	ug/kg	D	U
1,2-Dichlorobenzene	390.000	ug/kg	D	U	380.000	ug/kg	D	U
1,3-Dichlorobenzene	390.000	ug/kg	D	U	380.000	ug/kg	D	U
1,4-Dichlorobenzene	NA				380.000	ug/kg	D	U
2,4,5-Trichlorophenol	1900.000	ug/kg	D	U	1800.000	ug/kg	D	U
2,4,6-Trichlorophenol	NA				380.000	ug/kg	D	U
2,4-Dichlorophenol	390.000	ug/kg	D	U	380.000	ug/kg	D	U
2,4-Dimethylphenol	390.000	ug/kg	D	U	380.000	ug/kg	D	U
2,4-Dinitrophenol	1900.000	ug/kg	D	UJ	1800.000	ug/kg	D	UJ
2,4-Dinitrotoluene	390.000	ug/kg	D	U	380.000	ug/kg	D	U
2,6-Dinitrotoluene	390.000	ug/kg	D	U	380.000	ug/kg	D	U
2-Chloronaphthalene	390.000	ug/kg	D	U	380.000	ug/kg	D	U
2-Chlorophenol	390.000	ug/kg	D	U	380.000	ug/kg	D	U
2-Methylnaphthalene	390.000	ug/kg	D	U	380.000	ug/kg	D	U
2-Methylphenol	NA				380.000	ug/kg	D	U
2-Nitroaniline	1900.000	ug/kg	D	U	1800.000	ug/kg	D	U

TABLE F-6A
(Continued)

PHASE I - CHEMICAL PARAMETERS

BORING NUMBER	1795			1795		
SAMPLE NUMBER	067367			067370		
	0-1			3-4		
SAMPLING DATE	08/23/91			08/23/91		
CHEMICAL PARAMETERS	RESULTS	UNITS	L VQ	RESULTS	UNITS	L VQ
Semivolatile Organics						
2-Nitrophenol	390.000	ug/kg	D U	380.000	ug/kg	D U
3,3'-Dichlorobenzidine	770.000	ug/kg	D UJ	760.000	ug/kg	D UJ
3-Methylphenol	NA			NA		
3-Nitroaniline	1900.000	ug/kg	D U	1800.000	ug/kg	D U
4,6-Dinitro-2-methylphenol	1900.000	ug/kg	D U	1800.000	ug/kg	D U
4-Bromophenyl phenyl ether	390.000	ug/kg	D U	380.000	ug/kg	D U
4-Chloro-3-methylphenol	390.000	ug/kg	D U	380.000	ug/kg	D U
4-Chlorophenylphenyl ether	390.000	ug/kg	D U	380.000	ug/kg	D U
4-Methylphenol	NA			380.000	ug/kg	D U
4-Nitroaniline	1900.000	ug/kg	D U	1800.000	ug/kg	D U
4-Nitrophenol	1900.000	ug/kg	D U	1800.000	ug/kg	D U
Acenaphthene	390.000	ug/kg	D U	380.000	ug/kg	D U
Acenaphthylene	390.000	ug/kg	D U	380.000	ug/kg	D U
Anthracene	58.000	ug/kg	D J	380.000	ug/kg	D U
Benzo(a)anthracene	270.000	ug/kg	D J	380.000	ug/kg	D U
Benzo(a)pyrene	120.000	ug/kg	D J	380.000	ug/kg	D U
Benzo(b)fluoranthene	360.000	ug/kg	D J	380.000	ug/kg	D U
Benzo(g,h,i)perylene	100.000	ug/kg	D J	380.000	ug/kg	D U
Benzo(k)fluoranthene	390.000	ug/kg	D U	380.000	ug/kg	D U
Benzoic acid	1900.000	ug/kg	D UJ	1800.000	ug/kg	D UJ
Benzyl alcohol	390.000	ug/kg	D U	380.000	ug/kg	D U
Butyl benzyl phthalate	390.000	ug/kg	D U	380.000	ug/kg	D U
Chrysene	300.000	ug/kg	D J	380.000	ug/kg	D U
Di-n-butyl phthalate	390.000	ug/kg	D U	380.000	ug/kg	D U
Di-n-octyl phthalate	390.000	ug/kg	D U	380.000	ug/kg	D U
Dibenzo(a,h)anthracene	390.000	ug/kg	D U	380.000	ug/kg	D U
Dibenzofuran	390.000	ug/kg	D U	380.000	ug/kg	D U
Diethyl phthalate	390.000	ug/kg	D U	380.000	ug/kg	D U
Dimethyl phthalate	390.000	ug/kg	D U	380.000	ug/kg	D U
Fluoranthene	610.000	ug/kg	D -	380.000	ug/kg	D U
Fluorene	390.000	ug/kg	D U	380.000	ug/kg	D U
Hexachlorobenzene	390.000	ug/kg	D U	380.000	ug/kg	D U
Hexachlorobutadiene	NA			380.000	ug/kg	D U
Hexachlorocyclopentadiene	390.000	ug/kg	D U	380.000	ug/kg	D U
Hexachloroethane	390.000	ug/kg	D U	380.000	ug/kg	D U
Indeno(1,2,3-cd)pyrene	84.000	ug/kg	D J	380.000	ug/kg	D U
Isophorone	390.000	ug/kg	D U	380.000	ug/kg	D U
Methyl parathion	100.000	ug/kg	C UJ	100.000	ug/kg	C UJ
N-Nitroso-di-n-propylamine	390.000	ug/kg	D U	380.000	ug/kg	D U
N-Nitrosodiphenylamine	390.000	ug/kg	D U	380.000	ug/kg	D U
Naphthalene	390.000	ug/kg	D U	380.000	ug/kg	D U
Nitrobenzene	390.000	ug/kg	D U	380.000	ug/kg	D U

0673

5174

TABLE F-6A
(Continued)

PHASE I - CHEMICAL PARAMETERS

BORING NUMBER	1795			1795		
SAMPLE NUMBER	067367			067370		
	0-1			3-4		
SAMPLING DATE	08/23/91			08/23/91		
CHEMICAL PARAMETERS	RESULTS	UNITS	L VQ	RESULTS	UNITS	L VQ
Semivolatile Organics						
O,O,O-Triethylphosphorothioate	100.000	ug/kg	D UJ	100.000	ug/kg	D UJ
Parathion	100.000	ug/kg	C UJ	100.000	ug/kg	C UJ
Pentachlorophenol	NA			1800.000	ug/kg	D U
Phenanthrene	370.000	ug/kg	D J	380.000	ug/kg	D U
Phenol	390.000	ug/kg	D U	380.000	ug/kg	D U
Pyrene	500.000	ug/kg	D -	380.000	ug/kg	D U
Sulfotep	100.000	ug/kg	C UJ	100.000	ug/kg	C UJ
bis(2-Chloroethoxy)methane	390.000	ug/kg	D U	380.000	ug/kg	D U
bis(2-Chloroethyl)ether	390.000	ug/kg	D U	380.000	ug/kg	D U
bis(2-Chloroisopropyl) ether	390.000	ug/kg	D U	380.000	ug/kg	D U
bis(2-Ethylhexyl) phthalate	390.000	ug/kg	D U	380.000	ug/kg	D U
p-Chloroaniline	390.000	ug/kg	D U	380.000	ug/kg	D U
Pesticide Organics/PCBs						
4,4'-DDD	19.000	ug/kg	D U	19.000	ug/kg	D U
4,4'-DDE	19.000	ug/kg	D U	19.000	ug/kg	D U
4,4'-DDT	19.000	ug/kg	D U	19.000	ug/kg	D U
Aldrin	9.500	ug/kg	D U	9.400	ug/kg	D U
Aroclor-1016	95.000	ug/kg	D U	94.000	ug/kg	D U
Aroclor-1221	95.000	ug/kg	D U	94.000	ug/kg	D U
Aroclor-1232	95.000	ug/kg	D U	94.000	ug/kg	D U
Aroclor-1242	95.000	ug/kg	D U	94.000	ug/kg	D U
Aroclor-1248	95.000	ug/kg	D U	94.000	ug/kg	D U
Aroclor-1254	190.000	ug/kg	D U	190.000	ug/kg	D U
Aroclor-1260	190.000	ug/kg	D U	190.000	ug/kg	D U
Chlordane	NA			NA		
Dieldrin	19.000	ug/kg	D U	19.000	ug/kg	D U
Dimethoate	100.000	ug/kg	C UJ	100.000	ug/kg	C UJ
Disulfoton	100.000	ug/kg	C UJ	100.000	ug/kg	C UJ
Endosulfan II	19.000	ug/kg	D U	19.000	ug/kg	D U
Endosulfan sulfate	19.000	ug/kg	D U	19.000	ug/kg	D U
Endosulfan-I	9.500	ug/kg	D U	9.400	ug/kg	D U
Endrin	19.000	ug/kg	D U	19.000	ug/kg	D U
Endrin ketone	19.000	ug/kg	D U	19.000	ug/kg	D U
Ethion	100.000	ug/kg	C UJ	100.000	ug/kg	C UJ
Famphur	100.000	ug/kg	C UJ	100.000	ug/kg	C UJ

TABLE F-6A
(Continued)

PHASE I - CHEMICAL PARAMETERS

BORING NUMBER	1795				1795		
SAMPLE NUMBER	067367				067370		
	0-1				3-4		
SAMPLING DATE	08/23/91				08/23/91		
CHEMICAL PARAMETERS	RESULTS	UNITS	L	VQ	RESULTS	UNITS	L VQ
Pesticide Organics/PCBs							
Heptachlor	NA				9.400	ug/kg	D U
Heptachlor epoxide	9.500	ug/kg	D	U	9.400	ug/kg	D U
Methoxychlor	NA				94.000	ug/kg	D U
Phorate	100.000	ug/kg	C	UJ	100.000	ug/kg	C UJ
Thionazin	100.000	ug/kg	C	UJ	100.000	ug/kg	C UJ
Toxaphene	190.000	ug/kg	D	U	190.000	ug/kg	D U
alpha-BHC	9.500	ug/kg	D	U	9.400	ug/kg	D U
alpha-Chlordane	NA				94.000	ug/kg	D U
beta-BHC	9.500	ug/kg	D	U	9.400	ug/kg	D U
delta-BHC	9.500	ug/kg	D	U	9.400	ug/kg	D U
gamma-BHC (Lindane)	NA				9.400	ug/kg	D U
gamma-Chlordane	NA				94.000	ug/kg	D U
Dioxin Furan							
1,2,3,4,6,7,8-Heptachlorodibenzo-p-dioxin	0.190	ug/kg	E	U	0.085	ug/kg	E U
1,2,3,4,6,7,8-Heptachlorodibenzofuran	0.050	ug/kg	E	U	0.020	ug/kg	E U
1,2,3,4,7,8,9-Heptachlorodibenzofuran	0.070	ug/kg	E	U	0.028	ug/kg	E U
1,2,3,4,7,8-Hexachlorodibenzo-p-dioxin	0.110	ug/kg	E	U	0.200	ug/kg	E U
1,2,3,4,7,8-Hexachlorodibenzofuran	0.048	ug/kg	E	U	0.023	ug/kg	E U
1,2,3,6,7,8-Hexachlorodibenzo-p-dioxin	0.090	ug/kg	E	U	0.160	ug/kg	E U
1,2,3,6,7,8-Hexachlorodibenzofuran	0.043	ug/kg	E	U	0.020	ug/kg	E U
1,2,3,7,8,9-Hexachlorodibenzo-p-dioxin	0.095	ug/kg	E	U	0.170	ug/kg	E U
1,2,3,7,8,9-Hexachlorodibenzofuran	0.055	ug/kg	E	U	0.027	ug/kg	E U
1,2,3,7,8-Pentachlorodibenzo-p-dioxin	0.120	ug/kg	E	UJ	0.065	ug/kg	E UJ
1,2,3,7,8-Pentachlorodibenzofuran	0.032	ug/kg	E	UJ	0.032	ug/kg	E UJ
2,3,4,6,7,8-Hexachlorodibenzofuran	0.050	ug/kg	E	U	0.024	ug/kg	E U
2,3,4,7,8-Pentachlorodibenzofuran	0.035	ug/kg	E	UJ	0.034	ug/kg	E UJ
2,3,7,8-TCDD	0.210	ug/kg	E	U	0.490	ug/kg	E U
2,3,7,8-TCDF	0.280	ug/kg	E	U	0.600	ug/kg	E U
Heptachlorodibenzo-p-dioxin	0.190	ug/kg	E	U	0.085	ug/kg	E U
Heptachlorodibenzofuran	0.060	ug/kg	E	U	0.023	ug/kg	E U
Hexachlorodibenzo-p-dioxin	0.100	ug/kg	E	U	0.170	ug/kg	E U
Hexachlorodibenzofuran	0.049	ug/kg	E	U	0.023	ug/kg	E U
Octachlorodibenzo-p-dioxin	2.900	ug/kg	E	J	3.600	ug/kg	E J
Octachlorodibenzofuran	0.075	ug/kg	E	UJ	0.023	ug/kg	E UJ
Pentachlorodibenzo-p-dioxin	0.120	ug/kg	E	UJ	0.065	ug/kg	E UJ
Pentachlorodibenzofuran	0.034	ug/kg	E	UJ	0.033	ug/kg	E UJ
Tetrachlorodibenzo-p-dioxin	0.022	ug/kg	E	U	0.095	ug/kg	E U
Tetrachlorodibenzofuran	0.027	ug/kg	E	UJ	0.030	ug/kg	E UJ

0675

0174

TABLE F-6A
(Continued)

PHASE II - RADIOLOGICAL PARAMETERS

BORING NUMBER	11186 (1973)			11186 (1973)			11186 (1973)		
SAMPLE NUMBER	110413			112507			112514		
	0.5 - 1			4.5 - 6.5			9.5 - 11		
SAMPLING DATE	03/24/93			04/12/93			04/12/93		
RADIOLOGICAL PARAMETERS	RESULTS	UNITS	VQ	RESULTS	UNITS	VQ	RESULTS	UNITS	VQ
CS-137	0.651	pci/g	UJ	0.104	pci/g	UJ	0.077	pci/g	UJ
GROSS ALPHA	52.500	pci/g	-	29.300	pci/g	-	26.800	pci/g	-
GROSS BETA	62.600	pci/g	J	32.100	pci/g	-	29.800	pci/g	-
NP-237	0.167	pci/g	N	0.553	pci/g	N	0.267	pci/g	N
PU-238	0.042	pci/g	J	0.044	pci/g	J	0.025	pci/g	J
PU-239/240	0.031	pci/g	J	0.042	pci/g	J	0.020	pci/g	UJ
RA-226	3.010	pci/g	-	1.990	pci/g	-	0.948	pci/g	-
RA-228	1.120	pci/g	-	1.100	pci/g	-	0.876	pci/g	-
RU-106	0.104	pci/g	UJ	0.712	pci/g	UJ	0.748	pci/g	UJ
SR-90	0.382	pci/g	UJ	0.815	pci/g	J	0.889	pci/g	J
TC-99	0.351	pci/g	UJ	0.386	pci/g	UJ	0.400	pci/g	UJ
TH-228	1.050	pci/g	-	0.991	pci/g	-	0.875	pci/g	-
TH-230	3.190	pci/g	-	2.000	pci/g	-	1.100	pci/g	-
TH-232	0.951	pci/g	-	0.985	pci/g	-	0.792	pci/g	-
TH-TOTAL	8.660	mg/kg	-	8.980	mg/kg	-	7.220	mg/kg	-
U-234	9.220	pci/g	-	6.050	pci/g	-	2.310	pci/g	-
U-235/236	0.428	pci/g	J	0.300	pci/g	J	0.153	pci/g	J
U-238	9.320	pci/g	-	6.610	pci/g	-	2.730	pci/g	-
U-TOTAL	29.000	mg/kg	-	1.800	mg/kg	-	17.500	mg/kg	-

TABLE F-6A
(Continued)

PHASE II - RADIOLOGICAL PARAMETERS

BORING NUMBER	11187 (1974)			11187 (1974)			11187 (1974)		
SAMPLE NUMBER	110415			112520			112526		
	0.5 - 1			4 - 6			9 - 10.5		
SAMPLING DATE	03/24/93			04/13/93			04/13/93		
RADIOLOGICAL PARAMETERS	RESULTS	UNITS	VQ	RESULTS	UNITS	VQ	RESULTS	UNITS	VQ
CS-137	0.165	pci/g	-	0.142	pci/g	UJ	0.097	pci/g	UJ
GROSS ALPHA	78.900	pci/g	-	176.000	pci/g	-	29.800	pci/g	-
GROSS BETA	68.000	pci/g	J	157.000	pci/g	-	42.300	pci/g	-
NP-237	0.142	pci/g	N	0.316	pci/g	N	6.530	pci/g	-
PU-238	0.042	pci/g	J	0.023	pci/g	-	0.024	pci/g	J
PU-239/240	0.026	pci/g	J	0.016	pci/g	J	0.034	pci/g	J
RA-226	1.640	pci/g	-	1.210	pci/g	-	0.971	pci/g	-
RA-228	2.230	pci/g	-	1.540	pci/g	-	0.934	pci/g	-
RU-106	0.799	pci/g	UJ	1.020	pci/g	UJ	0.694	pci/g	UJ
SR-90	0.431	pci/g	UJ	0.494	pci/g	UJ	0.892	pci/g	J
TC-99	0.372	pci/g	UJ	0.407	pci/g	UJ	0.443	pci/g	UJ
TH-228	2.090	pci/g	-	1.280	pci/g	-	0.745	pci/g	-
TH-230	3.010	pci/g	-	2.610	pci/g	-	1.030	pci/g	-
TH-232	1.520	pci/g	-	1.290	pci/g	-	0.716	pci/g	-
TH-TOTAL	13.800	mg/kg	-	11.800	mg/kg	-	6.530	mg/kg	-
U-234	29.700	pci/g	-	98.400	pci/g	R	3.510	pci/g	-
U-235/236	1.450	pci/g	-	4.880	pci/g	R	0.113	pci/g	J
U-238	29.300	pci/g	-	102.500	pci/g	R	4.550	pci/g	-
U-TOTAL	91.500	mg/kg	-	297.000	mg/kg	-	12.300	mg/kg	-

0677

5174

TABLE F-6A
(Continued)

PHASE II - RADIOLOGICAL PARAMETERS

BORING NUMBER	11188 (1976)			11188 (1976)			1964		
SAMPLE NUMBER	110547			110556			112648		
	4.5 - 6			10 - 11			5 - 6.5		
SAMPLING DATE	04/02/93			04/02/93			04/17/93		
RADIOLOGICAL PARAMETERS	RESULTS	UNITS	VQ	RESULTS	UNITS	VQ	RESULTS	UNITS	VQ
CS-137	0.117	pci/g	UJ	0.078	pci/g	UJ	0.080	pci/g	UJ
GROSS ALPHA	18.100	pci/g	-	17.300	pci/g	-	23.900	pci/g	-
GROSS BETA	19.500	pci/g	-	19.200	pci/g	-	33.800	pci/g	-
NP-237	0.078	pci/g	N	0.037	pci/g	N	0.070	pci/g	N
PU-238	0.025	pci/g	J	0.028	pci/g	UJ	0.050	pci/g	U
PU-239/240	0.042	pci/g	UJ	0.015	pci/g	J	0.030	pci/g	J
RA-226	1.420	pci/g	-	0.775	pci/g	-	1.230	pci/g	-
RA-228	1.310	pci/g	-	0.742	pci/g	-	0.860	pci/g	-
RU-106	0.843	pci/g	UJ	0.630	pci/g	UJ	0.640	pci/g	UJ
SR-90	2.390	pci/g	J	0.789	pci/g	J	0.510	pci/g	UJ
TC-99	0.390	pci/g	UJ	0.344	pci/g	UJ	0.460	pci/g	UJ
TH-228	0.979	pci/g	-	0.550	pci/g	J	0.900	pci/g	-
TH-230	1.460	pci/g	-	1.020	pci/g	-	1.770	pci/g	-
TH-232	0.975	pci/g	-	0.548	pci/g	J	0.760	pci/g	-
TH-TOTAL	8.880	mg/kg	-	4.990	mg/kg	J	6.920	mg/kg	-
U-234	1.750	pci/g	-	0.810	pci/g	-	2.590	pci/g	-
U-235/236	0.146	pci/g	J	0.028	pci/g	J	0.070	pci/g	J
U-238	1.860	pci/g	-	0.740	pci/g	-	2.910	pci/g	-
U-TOTAL	6.680	mg/kg	J	2.770	mg/kg	U	16.700	mg/kg	J

TABLE F-6A
(Continued)

PHASE II - RADIOLOGICAL PARAMETERS

BORING NUMBER	1964			1965			1965		
SAMPLE NUMBER	112685			112737			112763		
	29 - 30.5			4 - 6			26.5 - 28		
SAMPLING DATE	04/17/93			04/20/93			04/21/93		
RADIOLOGICAL PARAMETERS	RESULTS	UNITS	VQ	RESULTS	UNITS	VQ	RESULTS	UNITS	VQ
CS-137	0.090	pci/g	UJ	0.105	pci/g	UJ	0.096	pci/g	UJ
GROSS ALPHA	10.200	pci/g	-	15.100	pci/g	-	8.940	pci/g	UJ
GROSS BETA	13.900	pci/g	-	22.300	pci/g	-	22.000	pci/g	-
NP-237	0.040	pci/g	U	0.032	pci/g	N	0.044	pci/g	U
PU-238	0.070	pci/g	U	0.097	pci/g	J	0.035	pci/g	UJ
PU-239/240	0.010	pci/g	U	0.027	pci/g	UJ	0.029	pci/g	UJ
RA-226	0.600	pci/g	-	1.120	pci/g	-	0.676	pci/g	-
RA-228	0.440	pci/g	J	1.120	pci/g	-	0.461	pci/g	J
RU-106	0.880	pci/g	UJ	0.714	pci/g	UJ	0.600	pci/g	UJ
SR-90	0.480	pci/g	UJ	0.443	pci/g	J	0.385	pci/g	UJ
TC-99	0.440	pci/g	UJ	0.385	pci/g	UJ	0.403	pci/g	UJ
TH-228	0.330	pci/g	J	0.750	pci/g	J	0.442	pci/g	R
TH-230	1.370	pci/g	-	2.810	pci/g	J	1.510	pci/g	R
TH-232	0.330	pci/g	J	0.830	pci/g	J	0.862	pci/g	R
TH-TOTAL	3.000	mg/kg	J	7.530	mg/kg	J	7.930	mg/kg	R
U-234	0.570	pci/g	J	3.070	pci/g	-	0.585	pci/g	J
U-235/236	0.020	pci/g	J	0.100	pci/g	J	0.020	pci/g	J
U-238	0.660	pci/g	-	3.040	pci/g	-	0.588	pci/g	J
U-TOTAL	10.300	mg/kg	J	20.600	mg/kg	-	9.810	mg/kg	-

0679

5174

TABLE F-6A
(Continued)

PHASE II - RADIOLOGICAL PARAMETERS

BORING NUMBER	1966			1966			1966		
SAMPLE NUMBER	110405			112859			112883		
	0.5 - 1			4.5 - 6.5			24 - 25		
SAMPLING DATE	03/24/93			04/21/93			04/22/93		
RADIOLOGICAL PARAMETERS	RESULTS	UNITS	VQ	RESULTS	UNITS	VQ	RESULTS	UNITS	VQ
CS-137	0.301	pci/g	-	0.078	pci/g	UJ	0.094	pci/g	UJ
GROSS ALPHA	57.600	pci/g	-	21.700	pci/g	-	19.100	pci/g	-
GROSS BETA	103.000	pci/g	J	46.500	pci/g	-	34.300	pci/g	-
NP-237	0.283	pci/g	N	0.034	pci/g	R	0.070	pci/g	N
PU-238	0.052	pci/g	J	0.018	pci/g	U	0.039	pci/g	U
PU-239/240	0.045	pci/g	J	0.030	pci/g	UJ	0.030	pci/g	UJ
RA-226	1.240	pci/g	-	1.840	pci/g	-	1.260	pci/g	-
RA-228	3.380	pci/g	-	1.150	pci/g	-	0.913	pci/g	-
RU-106	8.950	pci/g	UJ	0.630	pci/g	UJ	0.930	pci/g	UJ
SR-90	0.352	pci/g	UJ	0.861	pci/g	J	0.963	pci/g	J
TC-99	0.342	pci/g	UJ	0.416	pci/g	UJ	0.377	pci/g	UJ
TH-228	2.860	pci/g	-	0.720	pci/g	R	1.560	pci/g	R
TH-230	4.650	pci/g	-	2.140	pci/g	R	2.540	pci/g	R
TH-232	2.860	pci/g	-	0.810	pci/g	R	1.100	pci/g	R
TH-TOTAL	26.000	mg/kg	-	6.560	mg/kg	R	10.100	mg/kg	R
U-234	8.050	pci/g	-	1.780	pci/g	-	0.884	pci/g	-
U-235/236	0.473	pci/g	J	0.043	pci/g	J	0.037	pci/g	J
U-238	10.600	pci/g	-	1.900	pci/g	-	1.010	pci/g	-
U-TOTAL	31.720	mg/kg	-	13.900	mg/kg	-	12.600	mg/kg	-

TABLE F-6A
(Continued)

PHASE II - RADIOLOGICAL PARAMETERS

BORING NUMBER	1967			1967			1967		
SAMPLE NUMBER	110362			112696			112731		
	0.5 - 1			4.5 - 7.5			29.5 - 31		
SAMPLING DATE	03/22/93			04/18/93			04/19/93		
RADIOLOGICAL PARAMETERS	RESULTS	UNITS	VQ	RESULTS	UNITS	VQ	RESULTS	UNITS	VQ
CS-137	0.237	pci/g	-	0.090	pci/g	UJ	0.073	pci/g	UJ
GROSS ALPHA	14.600	pci/g	-	21.400	pci/g	-	21.900	pci/g	-
GROSS BETA	39.100	pci/g	-	27.000	pci/g	-	22.900	pci/g	-
NP-237	0.166	pci/g	N	0.030	pci/g	U	0.032	pci/g	U
PU-238	0.096	pci/g	J	0.110	pci/g	U	0.035	pci/g	UJ
PU-239/240	0.133	pci/g	UJ	0.030	pci/g	UJ	0.031	pci/g	UJ
RA-226	1.020	pci/g	U	1.070	pci/g	-	1.020	pci/g	-
RA-228	1.060	pci/g	-	1.040	pci/g	-	0.899	pci/g	-
RU-106	0.591	pci/g	UJ	0.670	pci/g	UJ	0.633	pci/g	UJ
SR-90	0.603	pci/g	UJ	0.480	pci/g	UJ	0.441	pci/g	UJ
TC-99	0.343	pci/g	UJ	0.400	pci/g	UJ	0.399	pci/g	UJ
TH-228	0.731	pci/g	-	0.740	pci/g	-	0.995	pci/g	J
TH-230	1.040	pci/g	-	4.350	pci/g	-	1.960	pci/g	J
TH-232	0.938	pci/g	-	0.840	pci/g	-	0.796	pci/g	J
TH-TOTAL	8.630	mg/kg	-	7.660	mg/kg	-	7.320	mg/kg	J
U-234	2.350	pci/g	-	2.500	pci/g	-	0.790	pci/g	-
U-235/236	0.052	pci/g	J	0.160	pci/g	J	0.063	pci/g	J
U-238	2.360	pci/g	-	2.560	pci/g	-	0.859	pci/g	-
U-TOTAL	7.340	mg/kg	-	15.300	mg/kg	J	9.170	mg/kg	-

0681

51174

TABLE F-6A
(Continued)

PHASE II - RADIOLOGICAL PARAMETERS

BORING NUMBER	1968			1968			1968		
SAMPLE NUMBER	110396			112835			112849		
	0.5 - 1			4.5 - 6.5			15.5 - 16.5		
SAMPLING DATE	03/22/93			04/20/93			04/20/93		
RADIOLOGICAL PARAMETERS	RESULTS	UNITS	VQ	RESULTS	UNITS	VQ	RESULTS	UNITS	VQ
CS-137	0.311	pci/g	-	0.108	pci/g	UJ	0.085	pci/g	UJ
GROSS ALPHA	32.600	pci/g	-	22.500	pci/g	-	8.720	pci/g	-
GROSS BETA	42.000	pci/g	-	27.800	pci/g	-	18.000	pci/g	-
NP-237	0.116	pci/g	N	0.075	pci/g	N	0.119	pci/g	N
PU-238	0.035	pci/g	UJ	0.103	pci/g	J	0.020	pci/g	U
PU-239/240	0.041	pci/g	U	0.013	pci/g	U	0.034	pci/g	UJ
RA-226	1.080	pci/g	J	1.170	pci/g	-	0.863	pci/g	-
RA-228	1.000	pci/g	-	0.959	pci/g	-	0.705	pci/g	-
RU-106	0.708	pci/g	UJ	0.777	pci/g	UJ	0.725	pci/g	UJ
SR-90	0.478	pci/g	UJ	0.412	pci/g	UJ	0.371	pci/g	UJ
TC-99	0.322	pci/g	UJ	0.396	pci/g	UJ	0.386	pci/g	UJ
TH-228	0.850	pci/g	-	0.915	pci/g	J	0.524	pci/g	J
TH-230	1.930	pci/g	-	1.250	pci/g	J	0.856	pci/g	J
TH-232	0.840	pci/g	-	0.967	pci/g	J	0.568	pci/g	J
TH-TOTAL	7.650	mg/kg	-	8.900	mg/kg	J	5.230	mg/kg	J
U-234	9.130	pci/g	-	1.360	pci/g	-	0.969	pci/g	-
U-235/236	0.474	pci/g	J	0.075	pci/g	J	0.049	pci/g	J
U-238	9.410	pci/g	-	1.710	pci/g	-	0.993	pci/g	-
U-TOTAL	30.000	mg/kg	-	14.900	mg/kg	-	12.200	mg/kg	-

TABLE F-6A
(Continued)

PHASE II - RADIOLOGICAL PARAMETERS

BORING NUMBER	1969			1969			1969				
SAMPLE NUMBER	110339			112559			112563				
	0.5 - 1			4.5 - 6			9 - 10.5				
SAMPLING DATE	03/22/93			04/15/93			04/15/93				
RADIOLOGICAL PARAMETERS	RESULTS	UNITS	VQ	RESULTS	UNITS	VQ	RESULTS	UNITS	VQ		
CS-137	0.073	pci/g	UJ	0.088	pci/g	UJ	0.080	pci/g	UJ		
GROSS ALPHA	20.400	pci/g	-	21.500	pci/g	-	8.900	pci/g	-		
GROSS BETA	33.200	pci/g	-	21.000	pci/g	-	19.200	pci/g	-		
NP-237	0.356	pci/g	N	0.034	pci/g	N	0.034	pci/g	N		
PU-238	0.068	pci/g	J	0.064	pci/g	UJ	0.058	pci/g	J		
PU-239/240	0.083	pci/g	J	0.064	pci/g	UJ	0.046	pci/g	UJ		
RA-226	1.250	pci/g	J	0.918	pci/g	-	0.927	pci/g	-		
RA-228	1.320	pci/g	-	0.734	pci/g	-	0.646	pci/g	-		
RU-106	0.594	pci/g	UJ	0.703	pci/g	UJ	0.759	pci/g	UJ		
SR-90	0.508	pci/g	-	0.650	pci/g	J	0.666	pci/g	J		
TC-99	0.344	pci/g	UJ	0.331	pci/g	UJ	0.346	pci/g	UJ		
TH-228	0.876	pci/g	-	0.599	pci/g	R	0.765	pci/g	R		
TH-230	1.310	pci/g	-	0.871	pci/g	R	0.781	pci/g	R		
TH-232	0.952	pci/g	-	0.739	pci/g	R	0.800	pci/g	R		
TH-TOTAL	8.760	mg/kg	-	6.800	mg/kg	R	7.360	mg/kg	R		
U-234	3.240	pci/g	-	1.440	pci/g	-	0.643	pci/g	-		
U-235/236	0.241	pci/g	-	0.077	pci/g	J	0.020	pci/g	J		
U-238	3.700	pci/g	-	1.760	pci/g	-	0.767	pci/g	-		
U-TOTAL	9.850	mg/kg	-	4.820	mg/kg	-	3.470	mg/kg	-		

TABLE F-6A
(Continued)

PHASE II - RADIOLOGICAL PARAMETERS

BORING NUMBER	1970			1970			1971		
SAMPLE NUMBER	112690			112893			110327		
	4 - 5.5			9 - 10.5			0.5 - 1		
SAMPLING DATE	04/18/93			04/18/93			03/22/93		
RADIOLOGICAL PARAMETERS	RESULTS	UNITS	VQ	RESULTS	UNITS	VQ	RESULTS	UNITS	VQ
CS-137	0.230	pci/g	-	0.100	pci/g	UJ	0.107	pci/g	UJ
GROSS ALPHA	21.300	pci/g	-	10.900	pci/g	UJ	22.900	pci/g	-
GROSS BETA	27.800	pci/g	-	19.800	pci/g	-	36.800	pci/g	-
NP-237	0.050	pci/g	U	0.060	pci/g	U	0.077	pci/g	N
PU-238	0.280	pci/g	J	0.160	pci/g	J	0.016	pci/g	J
PU-239/240	0.020	pci/g	UJ	0.010	pci/g	UJ	0.021	pci/g	J
RA-226	0.950	pci/g	-	1.090	pci/g	-	1.210	pci/g	J
RA-228	1.080	pci/g	-	0.920	pci/g	-	1.180	pci/g	-
RU-106	0.820	pci/g	UJ	0.730	pci/g	UJ	0.838	pci/g	UJ
SR-90	0.800	pci/g	J	0.690	pci/g	J	0.359	pci/g	UJ
TC-99	0.410	pci/g	UJ	0.450	pci/g	UJ	0.357	pci/g	UJ
TH-228	0.770	pci/g	-	0.880	pci/g	-	0.965	pci/g	-
TH-230	1.550	pci/g	-	1.320	pci/g	-	1.520	pci/g	-
TH-232	0.920	pci/g	-	0.930	pci/g	-	0.892	pci/g	-
TH-TOTAL	8.360	mg/kg	-	8.470	mg/kg	-	8.210	mg/kg	-
U-234	3.680	pci/g	-	1.060	pci/g	-	5.050	pci/g	-
U-235/236	0.130	pci/g	J	0.030	pci/g	J	0.261	pci/g	J
U-238	3.790	pci/g	-	1.030	pci/g	-	4.840	pci/g	-
U-TOTAL	20.400	mg/kg	J	16.200	mg/kg	J	16.700	mg/kg	-

TABLE F-6A
(Continued)

PHASE II - RADIOLOGICAL PARAMETERS

BORING NUMBER	1971			1971			1972		
SAMPLE NUMBER	112536			112593			110382		
	4.5 - 6.5			9.5 - 11			0.5 - 1		
SAMPLING DATE	04/15/93			04/15/93			03/19/93		
RADIOLOGICAL PARAMETERS	RESULTS	UNITS	VQ	RESULTS	UNITS	VQ	RESULTS	UNITS	VQ
CS-137	0.080	pci/g	UJ	0.803	pci/g	UJ	0.547	pci/g	-
GROSS ALPHA	17.100	pci/g	-	16.000	pci/g	-	267.000	pci/g	J
GROSS BETA	32.900	pci/g	-	29.700	pci/g	-	95.800	pci/g	J
NP-237	0.039	pci/g	R	0.029	pci/g	R	NA		
PU-238	0.034	pci/g	J	0.035	pci/g	UJ	0.059	pci/g	J
PU-239/240	0.034	pci/g	UJ	0.021	pci/g	J	0.038	pci/g	UJ
RA-226	1.250	pci/g	-	0.900	pci/g	-	31.200	pci/g	-
RA-228	1.540	pci/g	-	0.965	pci/g	-	2.070	pci/g	-
RU-106	0.697	pci/g	UJ	0.794	pci/g	UJ	1.040	pci/g	UJ
SR-90	1.360	pci/g	J	1.780	pci/g	J	0.460	pci/g	UJ
TC-99	0.348	pci/g	UJ	0.336	pci/g	UJ	0.361	pci/g	UJ
TH-228	1.230	pci/g	R	0.920	pci/g	R	2.150	pci/g	NV
TH-230	1.550	pci/g	R	1.290	pci/g	R	33.800	pci/g	NV
TH-232	1.120	pci/g	R	0.747	pci/g	R	1.980	pci/g	NV
TH-TOTAL	10.300	mg/kg	R	6.870	mg/kg	R	18.100	mg/kg	NV
U-234	1.070	pci/g	-	0.949	pci/g	-	7.480	pci/g	-
U-235/236	0.056	pci/g	J	0.043	pci/g	J	0.287	pci/g	-
U-238	1.340	pci/g	-	1.040	pci/g	-	8.090	pci/g	-
U-TOTAL	2.580	mg/kg	J	5.680	mg/kg	-	36.200	mg/kg	-

0685

5174

TABLE F-6A
(Continued)

PHASE II - RADIOLOGICAL PARAMETERS

BORING NUMBER	1972			1972			1975		
SAMPLE NUMBER	110584			112494			110389		
	2.5 - 4			7.5 - 9			0.5 - 1		
SAMPLING DATE	04/08/93			04/08/93			03/22/93		
RADIOLOGICAL PARAMETERS	RESULTS	UNITS	VQ	RESULTS	UNITS	VQ	RESULTS	UNITS	VQ
CS-137	0.088	pci/g	UJ	0.100	pci/g	UJ	0.110	pci/g	UJ
GROSS ALPHA	62.700	pci/g	-	29.000	pci/g	-	51.400	pci/g	-
GROSS BETA	51.200	pci/g	-	26.700	pci/g	-	45.500	pci/g	-
NP-237	0.369	pci/g	N	0.291	pci/g	N	0.490	pci/g	R
PU-238	0.025	pci/g	UJ	0.029	pci/g	J	0.050	pci/g	J
PU-239/240	0.025	pci/g	UJ	0.030	pci/g	J	0.170	pci/g	UJ
RA-226	5.140	pci/g	-	0.870	pci/g	-	1.510	pci/g	-
RA-228	1.140	pci/g	-	0.930	pci/g	-	1.260	pci/g	-
RU-106	0.780	pci/g	UJ	0.850	pci/g	UJ	0.800	pci/g	UJ
SR-90	1.280	pci/g	J	0.400	pci/g	UJ	0.560	pci/g	UJ
TC-99	0.365	pci/g	UJ	0.380	pci/g	UJ	0.350	pci/g	UJ
TH-228	0.940	pci/g	-	0.670	pci/g	-	0.850	pci/g	-
TH-230	4.180	pci/g	-	0.830	pci/g	-	4.060	pci/g	-
TH-232	1.000	pci/g	-	0.600	pci/g	J	0.780	pci/g	-
TH-TOTAL	9.100	mg/kg	-	5.430	mg/kg	-	7.190	mg/kg	-
U-234	15.200	pci/g	-	4.480	pci/g	-	9.860	pci/g	-
U-235/236	0.830	pci/g	-	0.260	pci/g	J	0.440	pci/g	J
U-238	15.700	pci/g	-	5.000	pci/g	-	10.200	pci/g	-
U-TOTAL	47.600	mg/kg	-	14.400	mg/kg	-	29.700	mg/kg	J

0686

TABLE F-6A
(Continued)

PHASE II - RADIOLOGICAL PARAMETERS

BORING NUMBER	1975			1975			1977		
SAMPLE NUMBER	112545			112550			110571		
	4 - 5			8.5 - 10.5			8.5 - 10		
SAMPLING DATE	04/13/93			04/13/93			04/06/93		
RADIOLOGICAL PARAMETERS	RESULTS	UNITS	VQ	RESULTS	UNITS	VQ	RESULTS	UNITS	VQ
CS-137	0.116	pci/g	UJ	0.079	pci/g	UJ	0.070	pci/g	J
GROSS ALPHA	16.900	pci/g	-	13.000	pci/g	-	28.200	pci/g	-
GROSS BETA	32.300	pci/g	-	24.000	pci/g	-	36.500	pci/g	-
NP-237	0.269	pci/g	N	0.306	pci/g	N	0.440	pci/g	N
PU-238	0.049	pci/g	J	0.167	pci/g	J	0.050	pci/g	J
PU-239/240	0.021	pci/g	J	0.022	pci/g	UJ	0.030	pci/g	J
RA-226	1.260	pci/g	-	1.120	pci/g	-	1.160	pci/g	-
RA-228	1.420	pci/g	-	1.080	pci/g	-	0.970	pci/g	-
RU-106	0.872	pci/g	UJ	0.608	pci/g	UJ	0.810	pci/g	UJ
SR-90	1.570	pci/g	-	0.586	pci/g	UJ	0.460	pci/g	UJ
TC-99	0.405	pci/g	UJ	0.368	pci/g	UJ	0.400	pci/g	UJ
TH-228	1.200	pci/g	-	0.857	pci/g	-	0.910	pci/g	-
TH-230	1.690	pci/g	-	1.100	pci/g	-	1.380	pci/g	-
TH-232	1.170	pci/g	-	0.786	pci/g	-	0.820	pci/g	-
TH-TOTAL	10.700	mg/kg	-	7.160	mg/kg	-	7.430	mg/kg	-
U-234	2.490	pci/g	-	0.977	pci/g	-	9.370	pci/g	-
U-235/236	0.075	pci/g	J	0.048	pci/g	J	0.580	pci/g	J
U-238	2.740	pci/g	-	1.040	pci/g	-	10.400	pci/g	-
U-TOTAL	11.600	mg/kg	-	4.820	mg/kg	-	35.900	mg/kg	-

0687

5174

TABLE F-6A
(Continued)

PHASE II - RADIOLOGICAL PARAMETERS

BORING NUMBER	1977			1978			1978		
SAMPLE NUMBER	110579			110406			112584		
	16.5 - 18.5			0.5 - 1			9.5 - 11		
SAMPLING DATE	04/07/93			03/24/93			04/16/93		
RADIOLOGICAL PARAMETERS	RESULTS	UNITS	VQ	RESULTS	UNITS	VQ	RESULTS	UNITS	VQ
CS-137	0.080	pci/g	UJ	0.098	pci/g	UJ	0.072	pci/g	UJ
GROSS ALPHA	19.600	pci/g	-	23.600	pci/g	-	18.600	pci/g	-
GROSS BETA	21.000	pci/g	-	38.400	pci/g	J	34.300	pci/g	-
NP-237	0.112	pci/g	N	0.219	pci/g	N	0.046	pci/g	N
PU-238	0.023	pci/g	J	0.047	pci/g	J	0.735	pci/g	J
PU-239/240	0.011	pci/g	UJ	0.021	pci/g	UJ	0.030	pci/g	UJ
RA-226	0.810	pci/g	-	1.040	pci/g	-	1.120	pci/g	-
RA-228	0.870	pci/g	-	1.030	pci/g	-	1.410	pci/g	-
RU-106	0.640	pci/g	UJ	0.764	pci/g	UJ	0.597	pci/g	UJ
SR-90	0.590	pci/g	J	0.410	pci/g	UJ	0.570	pci/g	J
TC-99	0.360	pci/g	UJ	0.355	pci/g	UJ	0.350	pci/g	UJ
TH-228	0.880	pci/g	-	0.884	pci/g	-	1.040	pci/g	R
TH-230	1.000	pci/g	-	1.310	pci/g	-	1.450	pci/g	R
TH-232	0.820	pci/g	-	1.000	pci/g	-	1.080	pci/g	R
TH-TOTAL	7.500	mg/kg	-	9.130	mg/kg	-	9.940	mg/kg	R
U-234	1.090	pci/g	-	3.190	pci/g	-	0.757	pci/g	-
U-235/236	0.070	pci/g	J	0.169	pci/g	J	0.024	pci/g	J
U-238	0.980	pci/g	-	3.460	pci/g	-	0.385	pci/g	J
U-TOTAL	3.500	mg/kg	J	10.700	mg/kg	-	5.760	mg/kg	-

TABLE F-6A
(Continued)

PHASE II - RADIOLOGICAL PARAMETERS

BORING NUMBER	1978			SF-SS-19			TRENCH #1		
SAMPLE NUMBER	112588			110369			113105		
	13.5 - 15			0.5 - 1			0 - 7		
SAMPLING DATE	04/16/93			03/22/93			05/28/93		
RADIOLOGICAL PARAMETERS	RESULTS	UNITS	VQ	RESULTS	UNITS	VQ	RESULTS	UNITS	VQ
CS-137	0.085	pci/g	UJ	0.334	pci/g	-	0.110	pci/g	J
GROSS ALPHA	18.700	pci/g	-	25.600	pci/g	-	104.000	pci/g	-
GROSS BETA	20.500	pci/g	-	33.800	pci/g	-	91.600	pci/g	-
NP-237	0.037	pci/g	R	0.076	pci/g	N	0.120	pci/g	N
PU-238	0.018	pci/g	UJ	0.036	pci/g	UJ	0.040	pci/g	J
PU-239/240	0.045	pci/g	UJ	0.048	pci/g	J	0.024	pci/g	UJ
RA-226	0.872	pci/g	-	1.220	pci/g	J	1.770	pci/g	-
RA-228	0.984	pci/g	-	1.090	pci/g	-	3.740	pci/g	-
RU-106	0.792	pci/g	UJ	0.596	pci/g	UJ	0.960	pci/g	UJ
SR-90	0.537	pci/g	J	0.894	pci/g	J	0.250	pci/g	U
TC-99	0.367	pci/g	UJ	0.324	pci/g	UJ	0.540	pci/g	UJ
TH-228	0.720	pci/g	R	0.853	pci/g	-	2.550	pci/g	J
TH-230	0.826	pci/g	R	1.930	pci/g	-	6.270	pci/g	J
TH-232	0.814	pci/g	R	0.839	pci/g	-	3.180	pci/g	J
TH-TOTAL	7.490	mg/kg	R	7.720	mg/kg	-	28.900	mg/kg	J
U-234	0.971	pci/g	-	3.220	pci/g	-	44.500	pci/g	-
U-235/236	0.072	pci/g	J	0.150	pci/g	J	2.620	pci/g	-
U-238	0.897	pci/g	-	3.990	pci/g	-	46.800	pci/g	-
U-TOTAL	4.740	mg/kg	-	12.500	mg/kg	-	165.000	mg/kg	-

TABLE F-6A
(Continued)

PHASE II - RADIOLOGICAL PARAMETERS

BORING NUMBER	TRENCH 2			TRENCH 2			TRENCH 4		
SAMPLE NUMBER	113724			113725			113722 0 - 3.42		
SAMPLING DATE	06/09/93			06/09/93			06/16/93		
RADIOLOGICAL PARAMETERS	RESULTS	UNITS	VQ	RESULTS	UNITS	VQ	RESULTS	UNITS	VQ
CS-137	NA			NA			0.160	pci/g	UJ
GROSS ALPHA	NA			NA			242.000	pci/g	J
GROSS BETA	NA			NA			530.000	pci/g	J
NP-237	NA			NA			0.050	pci/g	U
PU-238	NA			NA			0.030	pci/g	UJ
PU-239/240	NA			NA			0.020	pci/g	UJ
RA-226	9.210	pci/g	-	1.200	pci/g	U	5.760	pci/g	-
RA-228	1.650	pci/g	-	675.000	pci/g	-	0.740	pci/g	-
RU-106	NA			NA			1.350	pci/g	UJ
SR-90	NA			NA			0.210	pci/g	UJ
TC-99	NA			NA			0.660	pci/g	UJ
TH-228	13.400	pci/g	-	595.000	pci/g	-	4.960	pci/g	R
TH-230	37.600	pci/g	-	51.600	pci/g	-	7.700	pci/g	R
TH-232	12.900	pci/g	-	600.000	pci/g	-	6.130	pci/g	R
TH-TOTAL	NA			NA			55.800	mg/kg	R
U-234	228.000	pci/g	-	17.700	pci/g	-	378.000	pci/g	N
U-235/236	11.900	pci/g	-	1.250	pci/g	-	19.700	pci/g	N
U-238	241.000	pci/g	-	18.000	pci/g	-	397.000	pci/g	N
U-TOTAL	725.000	mg/kg	-	34.000	mg/kg	U	1170.000	mg/kg	-

TABLE F-6A
(Continued)

PHASE II - CHEMICAL PARAMETERS

BORING NUMBER	11186 (1973)			11187 (1974)			11187 (1974)		
SAMPLE NUMBER	110413			110415			112520		
	0.5-1			0.5-1			4-6		
SAMPLING DATE	03/24/93			03/24/93			04/13/93		
CHEMICAL PARAMETERS	RESULTS	UNITS	L VQ	RESULTS	UNITS	L VQ	RESULTS	UNITS	L VQ
Inorganics									
Aluminum	8230.000	mg/kg	C J	8980.000	mg/kg	C J	7340.000	mg/kg	C -
Antimony	1.100	mg/kg	C UJ	1.000	mg/kg	C UJ	1.200	mg/kg	C UJ
Arsenic	9.800	mg/kg	C -	5.700	mg/kg	C -	5.500	mg/kg	C -
Barium	70.400	mg/kg	C -	69.400	mg/kg	C -	58.400	mg/kg	C -
Beryllium	0.820	mg/kg	C -	0.570	mg/kg	C -	0.480	mg/kg	C -
Cadmium	1.100	mg/kg	C U	1.000	mg/kg	C U	1.200	mg/kg	C U
Calcium	107000.000	mg/kg	C J	89600.000	mg/kg	C J	136000.000	mg/kg	C -
Chromium	6.300	mg/kg	C -	10.100	mg/kg	C -	10.500	mg/kg	C -
Cobalt	3.700	mg/kg	C -	7.700	mg/kg	C -	3.300	mg/kg	C -
Copper	8.700	mg/kg	C -	13.500	mg/kg	C -	13.000	mg/kg	C -
Cyanide	0.330	mg/kg	C -	0.120	mg/kg	C -	0.120	mg/kg	C U
Iron	10200.000	mg/kg	C J	15900.000	mg/kg	C J	11500.000	mg/kg	C -
Lead	3.400	mg/kg	C -	12.200	mg/kg	C -	7.100	mg/kg	C J
Magnesium	32400.000	mg/kg	C -	20600.000	mg/kg	C -	39900.000	mg/kg	C -
Manganese	658.000	mg/kg	C J	747.000	mg/kg	C J	465.000	mg/kg	C J
Mercury	0.110	mg/kg	C U	0.110	mg/kg	C U	0.100	mg/kg	C U
Molybdenum	4.400	mg/kg	C UJ	5.000	mg/kg	C J	4.700	mg/kg	C U
Nickel	9.700	mg/kg	C -	14.100	mg/kg	C -	10.500	mg/kg	C -
Potassium	675.000	mg/kg	C -	968.000	mg/kg	C -	1030.000	mg/kg	C -
Selenium	0.450	mg/kg	C U	0.400	mg/kg	C U	0.450	mg/kg	C UJ
Silicon	631.000	mg/kg	C J	530.000	mg/kg	C J	610.000	mg/kg	C J
Silver	2.800	mg/kg	C -	3.900	mg/kg	C -	3.700	mg/kg	C -
Sodium	166.000	mg/kg	C -	130.000	mg/kg	C -	219.000	mg/kg	C -
Thallium	0.450	mg/kg	C U	0.400	mg/kg	C U	0.580	mg/kg	C J
Vanadium	14.400	mg/kg	C -	19.300	mg/kg	C -	15.100	mg/kg	C -
Zinc	23.500	mg/kg	C J	39.100	mg/kg	C J	47.600	mg/kg	C -
Volatile Organics									
1,1,1-Trichloroethane	11.000	ug/kg	C U	12.000	ug/kg	C U	12.000	ug/kg	C U
1,1,2,2-Tetrachloroethane	11.000	ug/kg	C U	12.000	ug/kg	C U	12.000	ug/kg	C U
1,1,2-Trichloroethane	11.000	ug/kg	C U	12.000	ug/kg	C U	12.000	ug/kg	C U
1,1-Dichloroethane	11.000	ug/kg	C U	12.000	ug/kg	C U	12.000	ug/kg	C U
1,1-Dichloroethene	11.000	ug/kg	C U	12.000	ug/kg	C U	12.000	ug/kg	C U
1,2-Dichloroethane	11.000	ug/kg	C U	12.000	ug/kg	C U	12.000	ug/kg	C U
1,2-Dichloroethene	11.000	ug/kg	C U	12.000	ug/kg	C U	12.000	ug/kg	C U
1,2-Dichloropropane	11.000	ug/kg	C U	12.000	ug/kg	C U	12.000	ug/kg	C U
2-Butanone	11.000	ug/kg	C U	12.000	ug/kg	C U	12.000	ug/kg	C U
2-Hexanone	11.000	ug/kg	C UJ	12.000	ug/kg	C UJ	12.000	ug/kg	C U
4-Methyl-2-pentanone	11.000	ug/kg	C UJ	12.000	ug/kg	C UJ	12.000	ug/kg	C U
Acetone	11.000	ug/kg	C U	12.000	ug/kg	C U	12.000	ug/kg	C U
Benzene	11.000	ug/kg	C U	12.000	ug/kg	C U	12.000	ug/kg	C U

0691

5174

TABLE F-6A
(Continued)

PHASE II - CHEMICAL PARAMETERS

BORING NUMBER	11186 (1973)			11187 (1974)			11187 (1974)		
SAMPLE NUMBER	110413			110415			112520		
	0.5-1			0.5-1			4-6		
SAMPLING DATE	03/24/93			03/24/93			04/13/93		
CHEMICAL PARAMETERS	RESULTS	UNITS	L VQ	RESULTS	UNITS	L VQ	RESULTS	UNITS	L VQ
Volatile Organics									
Bromodichloromethane	11.000	ug/kg	C U	12.000	ug/kg	C U	12.000	ug/kg	C U
Bromoform	11.000	ug/kg	C U	12.000	ug/kg	C U	12.000	ug/kg	C U
Bromomethane	11.000	ug/kg	C U	12.000	ug/kg	C U	12.000	ug/kg	C U
Carbon Tetrachloride	11.000	ug/kg	C U	12.000	ug/kg	C U	12.000	ug/kg	C U
Carbon disulfide	11.000	ug/kg	C U	12.000	ug/kg	C U	12.000	ug/kg	C U
Chlorobenzene	11.000	ug/kg	C U	12.000	ug/kg	C U	12.000	ug/kg	C U
Chloroethane	11.000	ug/kg	C U	12.000	ug/kg	C U	12.000	ug/kg	C U
Chloroform	11.000	ug/kg	C U	12.000	ug/kg	C U	12.000	ug/kg	C U
Chloromethane	11.000	ug/kg	C U	12.000	ug/kg	C U	12.000	ug/kg	C U
Dibromochloromethane	11.000	ug/kg	C U	12.000	ug/kg	C U	12.000	ug/kg	C U
Ethylbenzene	11.000	ug/kg	C U	12.000	ug/kg	C U	12.000	ug/kg	C U
Methylene chloride	11.000	ug/kg	C U	12.000	ug/kg	C U	12.000	ug/kg	C U
Styrene	11.000	ug/kg	C U	12.000	ug/kg	C U	12.000	ug/kg	C U
Tetrachloroethene	11.000	ug/kg	C U	12.000	ug/kg	C U	12.000	ug/kg	C U
Toluene	11.000	ug/kg	C U	12.000	ug/kg	C U	12.000	ug/kg	C U
Trichloroethene	11.000	ug/kg	C U	12.000	ug/kg	C U	12.000	ug/kg	C U
Vinyl Acetate	11.000	ug/kg	C U	12.000	ug/kg	C U	12.000	ug/kg	C U
Vinyl chloride	11.000	ug/kg	C UJ	12.000	ug/kg	C UJ	12.000	ug/kg	C U
Xylenes, Total	11.000	ug/kg	C U	12.000	ug/kg	C U	12.000	ug/kg	C U
cis-1,3-Dichloropropene	11.000	ug/kg	C U	12.000	ug/kg	C U	12.000	ug/kg	C U
trans-1,3-Dichloropropene	11.000	ug/kg	C U	12.000	ug/kg	C U	12.000	ug/kg	C U
Semivolatile Organics									
1,2,4-Trichlorobenzene	390.000	ug/kg	C U	400.000	ug/kg	C U	410.000	ug/kg	C U
1,2-Dichlorobenzene	390.000	ug/kg	C U	400.000	ug/kg	C U	410.000	ug/kg	C U
1,2-Diphenylhydrazine	390.000	ug/kg	C UJ	400.000	ug/kg	C UJ	NA		
1,3-Dichlorobenzene	390.000	ug/kg	C U	400.000	ug/kg	C U	410.000	ug/kg	C U
1,4-Dichlorobenzene	390.000	ug/kg	C U	400.000	ug/kg	C U	410.000	ug/kg	C U
2,4,5-Trichlorophenol	1900.000	ug/kg	C U	1900.000	ug/kg	C U	2000.000	ug/kg	C U
2,4,6-Trichlorophenol	390.000	ug/kg	C U	400.000	ug/kg	C U	410.000	ug/kg	C U
2,4-Dichlorophenol	390.000	ug/kg	C U	400.000	ug/kg	C U	410.000	ug/kg	C U
2,4-Dimethylphenol	390.000	ug/kg	C U	400.000	ug/kg	C U	410.000	ug/kg	C U
2,4-Dinitrophenol	1900.000	ug/kg	C UJ	1900.000	ug/kg	C UJ	2000.000	ug/kg	C U
2,4-Dinitrotoluene	390.000	ug/kg	C U	400.000	ug/kg	C U	410.000	ug/kg	C U
2,6-Dinitrotoluene	390.000	ug/kg	C U	400.000	ug/kg	C U	410.000	ug/kg	C U
2-Chloronaphthalene	390.000	ug/kg	C U	400.000	ug/kg	C U	410.000	ug/kg	C U
2-Chlorophenol	390.000	ug/kg	C U	400.000	ug/kg	C U	410.000	ug/kg	C U
2-Methylnaphthalene	390.000	ug/kg	C U	400.000	ug/kg	C U	410.000	ug/kg	C U
2-Methylphenol	390.000	ug/kg	C U	400.000	ug/kg	C U	410.000	ug/kg	C U
2-Nitroaniline	1900.000	ug/kg	C UJ	1900.000	ug/kg	C UJ	2000.000	ug/kg	C U
2-Nitrophenol	390.000	ug/kg	C UJ	400.000	ug/kg	C UJ	410.000	ug/kg	C U

5174

TABLE F-6A
(Continued)

PHASE II - CHEMICAL PARAMETERS

BORING NUMBER	11186 (1973)			11187 (1974)			11187 (1974)		
SAMPLE NUMBER	110413			110415			112520		
	0.5-1			0.5-1			4-6		
SAMPLING DATE	03/24/93			03/24/93			04/13/93		
CHEMICAL PARAMETERS	RESULTS	UNITS	L VQ	RESULTS	UNITS	L VQ	RESULTS	UNITS	L VQ
Semivolatile Organics									
3,3'-Dichlorobenzidine	390.000	ug/kg	C U	400.000	ug/kg	C U	410.000	ug/kg	C U
3-Nitroaniline	1900.000	ug/kg	C U	1900.000	ug/kg	C U	2000.000	ug/kg	C U
4,6-Dinitro-2-methylphenol	1900.000	ug/kg	C R	1900.000	ug/kg	C R	2000.000	ug/kg	C R
4-Bromophenyl phenyl ether	390.000	ug/kg	C U	400.000	ug/kg	C U	410.000	ug/kg	C U
4-Chloro-3-methylphenol	390.000	ug/kg	C U	400.000	ug/kg	C U	410.000	ug/kg	C U
4-Chlorophenylphenyl ether	390.000	ug/kg	C U	400.000	ug/kg	C U	410.000	ug/kg	C U
4-Methylphenol	390.000	ug/kg	C U	400.000	ug/kg	C U	410.000	ug/kg	C U
4-Nitroaniline	1900.000	ug/kg	C U	1900.000	ug/kg	C U	2000.000	ug/kg	C R
4-Nitrophenol	1900.000	ug/kg	C U	1900.000	ug/kg	C U	2000.000	ug/kg	C U
Acenaphthene	390.000	ug/kg	C U	400.000	ug/kg	C U	410.000	ug/kg	C U
Acenaphthylene	390.000	ug/kg	C U	400.000	ug/kg	C U	410.000	ug/kg	C U
Anthracene	390.000	ug/kg	C U	400.000	ug/kg	C U	410.000	ug/kg	C U
Benzo(a)anthracene	57.000	ug/kg	C J	400.000	ug/kg	C U	410.000	ug/kg	C U
Benzo(a)pyrene	51.000	ug/kg	C J	41.000	ug/kg	C J	410.000	ug/kg	C U
Benzo(b)fluoranthene	390.000	ug/kg	C U	400.000	ug/kg	C U	410.000	ug/kg	C U
Benzo(g,h,i)perylene	390.000	ug/kg	C U	400.000	ug/kg	C U	410.000	ug/kg	C U
Benzo(k)fluoranthene	57.000	ug/kg	C J	48.000	ug/kg	C J	410.000	ug/kg	C U
Benzoic acid	1900.000	ug/kg	C UJ	1900.000	ug/kg	C UJ	2000.000	ug/kg	C U
Benzyl alcohol	390.000	ug/kg	C UJ	400.000	ug/kg	C UJ	410.000	ug/kg	C U
Butyl benzyl phthalate	390.000	ug/kg	C U	400.000	ug/kg	C U	410.000	ug/kg	C U
Carbazole	390.000	ug/kg	C U	400.000	ug/kg	C U	410.000	ug/kg	C U
Chrysene	82.000	ug/kg	C J	400.000	ug/kg	C U	410.000	ug/kg	C U
Di-n-butyl phthalate	390.000	ug/kg	C U	400.000	ug/kg	C U	410.000	ug/kg	C U
Di-n-octyl phthalate	390.000	ug/kg	C U	400.000	ug/kg	C U	410.000	ug/kg	C U
Dibenzo(a,h)anthracene	390.000	ug/kg	C U	400.000	ug/kg	C U	410.000	ug/kg	C U
Dibenzofuran	390.000	ug/kg	C U	400.000	ug/kg	C U	410.000	ug/kg	C U
Diethyl phthalate	390.000	ug/kg	C U	400.000	ug/kg	C U	410.000	ug/kg	C U
Dimethyl phthalate	390.000	ug/kg	C U	400.000	ug/kg	C U	410.000	ug/kg	C U
Fluoranthene	130.000	ug/kg	C J	83.000	ug/kg	C J	110.000	ug/kg	C J
Fluorene	390.000	ug/kg	C U	400.000	ug/kg	C U	410.000	ug/kg	C U
Hexachlorobenzene	390.000	ug/kg	C U	400.000	ug/kg	C U	410.000	ug/kg	C U
Hexachlorobutadiene	390.000	ug/kg	C U	400.000	ug/kg	C U	410.000	ug/kg	C U
Hexachlorocyclopentadiene	390.000	ug/kg	C U	400.000	ug/kg	C U	410.000	ug/kg	C U
Hexachloroethane	390.000	ug/kg	C U	400.000	ug/kg	C U	410.000	ug/kg	C U
Indeno(1,2,3-cd)pyrene	390.000	ug/kg	C U	400.000	ug/kg	C U	410.000	ug/kg	C U
Isophorone	390.000	ug/kg	C U	400.000	ug/kg	C U	410.000	ug/kg	C U
N-Nitroso-di-n-propylamine	390.000	ug/kg	C U	400.000	ug/kg	C U	410.000	ug/kg	C U
N-Nitrosodimethylamine	390.000	ug/kg	C U	400.000	ug/kg	C U	NA		
N-Nitrosodiphenylamine	390.000	ug/kg	C U	400.000	ug/kg	C U	410.000	ug/kg	C U
Naphthalene	390.000	ug/kg	C U	400.000	ug/kg	C U	410.000	ug/kg	C U
Nitrobenzene	390.000	ug/kg	C U	400.000	ug/kg	C U	410.000	ug/kg	C U
Pentachlorophenol	1900.000	ug/kg	C U	1900.000	ug/kg	C U	2000.000	ug/kg	C U

TABLE F-6A
(Continued)

PHASE II - CHEMICAL PARAMETERS

BORING NUMBER	11186 (1973)			11187 (1974)			11187 (1974)		
SAMPLE NUMBER	110413			110415			112520		
	0.5-1			0.5-1			4-6		
SAMPLING DATE	03/24/93			03/24/93			04/13/93		
CHEMICAL PARAMETERS	RESULTS	UNITS	L VQ	RESULTS	UNITS	L VQ	RESULTS	UNITS	L VQ
Semivolatile Organics									
Phenanthrene	61.000	ug/kg	C J	400.000	ug/kg	C U	410.000	ug/kg	C U
Phenol	390.000	ug/kg	C U	400.000	ug/kg	C U	410.000	ug/kg	C U
Pyrene	120.000	ug/kg	C J	79.000	ug/kg	C J	410.000	ug/kg	C U
Tributyl phosphate	390.000	ug/kg	C U	400.000	ug/kg	C U	NA		
bis(2-Chloroethoxy)methane	390.000	ug/kg	C U	400.000	ug/kg	C U	410.000	ug/kg	C U
bis(2-Chloroethyl)ether	390.000	ug/kg	C U	400.000	ug/kg	C U	410.000	ug/kg	C U
bis(2-Chloroisopropyl) ether	390.000	ug/kg	C U	400.000	ug/kg	C U	410.000	ug/kg	C U
bis(2-Ethylhexyl) phthalate	390.000	ug/kg	C U	55.000	ug/kg	C J	410.000	ug/kg	C U
p-Chloroaniline	390.000	ug/kg	C U	400.000	ug/kg	C U	410.000	ug/kg	C U
Pesticide Organics/PCBs									
4,4'-DDD	3.900	ug/kg	C U	4.000	ug/kg	C U	4.000	ug/kg	C UJ
4,4'-DDE	3.900	ug/kg	C U	4.000	ug/kg	C U	4.000	ug/kg	C U
4,4'-DDT	3.900	ug/kg	C U	4.000	ug/kg	C U	4.000	ug/kg	C U
Aldrin	2.000	ug/kg	C U	2.000	ug/kg	C U	2.100	ug/kg	C U
Aroclor-1016	39.000	ug/kg	C U	40.000	ug/kg	C U	40.000	ug/kg	C U
Aroclor-1221	79.000	ug/kg	C U	80.000	ug/kg	C U	82.000	ug/kg	C U
Aroclor-1232	39.000	ug/kg	C U	40.000	ug/kg	C U	40.000	ug/kg	C U
Aroclor-1242	39.000	ug/kg	C U	40.000	ug/kg	C U	40.000	ug/kg	C U
Aroclor-1248	39.000	ug/kg	C U	40.000	ug/kg	C U	40.000	ug/kg	C U
Aroclor-1254	82.000	ug/kg	C -	58.000	ug/kg	C J	86.000	ug/kg	C J
Aroclor-1260	39.000	ug/kg	C U	40.000	ug/kg	C U	40.000	ug/kg	C U
Dieldrin	3.900	ug/kg	C U	4.000	ug/kg	C U	4.000	ug/kg	C U
Endosulfan II	3.900	ug/kg	C U	4.000	ug/kg	C U	4.000	ug/kg	C U
Endosulfan sulfate	3.900	ug/kg	C U	4.000	ug/kg	C U	4.000	ug/kg	C U
Endosulfan-I	2.000	ug/kg	C U	2.000	ug/kg	C U	2.100	ug/kg	C U
Endrin	3.900	ug/kg	C U	4.000	ug/kg	C U	4.000	ug/kg	C U
Endrin aldehyde	3.900	ug/kg	C U	4.000	ug/kg	C U	4.000	ug/kg	C U
Endrin ketone	3.900	ug/kg	C U	4.000	ug/kg	C U	4.000	ug/kg	C U
Heptachlor	2.000	ug/kg	C U	2.000	ug/kg	C U	2.100	ug/kg	C U
Heptachlor epoxide	2.000	ug/kg	C U	2.000	ug/kg	C U	2.100	ug/kg	C U
Methoxychlor	20.000	ug/kg	C U	20.000	ug/kg	C U	21.000	ug/kg	C U
Toxaphene	200.000	ug/kg	C U	200.000	ug/kg	C U	210.000	ug/kg	C U
alpha-BHC	2.000	ug/kg	C U	2.000	ug/kg	C U	2.100	ug/kg	C U
alpha-Chlordane	2.000	ug/kg	C U	2.000	ug/kg	C U	2.100	ug/kg	C U
beta-BHC	2.000	ug/kg	C U	2.000	ug/kg	C U	2.100	ug/kg	C U
delta-BHC	2.000	ug/kg	C U	2.000	ug/kg	C U	2.100	ug/kg	C U
gamma-BHC (Lindane)	2.000	ug/kg	C U	2.000	ug/kg	C U	2.100	ug/kg	C U
gamma-Chlordane	2.000	ug/kg	C U	2.000	ug/kg	C U	2.100	ug/kg	C U

TABLE F-6A
(Continued)

PHASE II - CHEMICAL PARAMETERS

BORING NUMBER	11188 (1976)			11186 (1973)			11187 (1974)		
SAMPLE NUMBER	110547			112507			112526		
	4.5-6			4.5-6.5			9-10.5		
SAMPLING DATE	04/02/93			04/12/93			04/13/93		
CHEMICAL PARAMETERS	RESULTS	UNITS	L VQ	RESULTS	UNITS	L VQ	RESULTS	UNITS	L VQ
Inorganics									
Aluminum	12500.000	mg/kg	C J	15400.000	mg/kg	C -	12800.000	mg/kg	D -
Antimony	1.100	mg/kg	C UJ	1.300	mg/kg	C UJ	0.940	mg/kg	D UJ
Arsenic	7.200	mg/kg	C -	8.300	mg/kg	C -	7.300	mg/kg	D -
Barium	55.500	mg/kg	C -	93.800	mg/kg	C -	73.600	mg/kg	D -
Beryllium	0.560	mg/kg	C -	0.830	mg/kg	C -	0.650	mg/kg	D -
Cadmium	1.100	mg/kg	C U	1.300	mg/kg	C U	0.940	mg/kg	D U
Calcium	7610.000	mg/kg	C J	14800.000	mg/kg	C -	73500.000	mg/kg	D -
Chromium	14.200	mg/kg	C -	18.900	mg/kg	C -	16.200	mg/kg	D -
Cobalt	6.700	mg/kg	C -	10.000	mg/kg	C -	6.200	mg/kg	D -
Copper	15.500	mg/kg	C -	27.400	mg/kg	C -	19.800	mg/kg	D -
Cyanide	0.110	mg/kg	C U	0.130	mg/kg	C U	0.120	mg/kg	D U
Iron	20800.000	mg/kg	C J	31800.000	mg/kg	C -	24500.000	mg/kg	D -
Lead	5.000	mg/kg	C -	7.800	mg/kg	C J	9.100	mg/kg	D J
Magnesium	4690.000	mg/kg	C -	10600.000	mg/kg	C -	26800.000	mg/kg	D -
Manganese	295.000	mg/kg	C J	768.000	mg/kg	C J	272.000	mg/kg	D J
Mercury	0.110	mg/kg	C U	0.110	mg/kg	C U	0.110	mg/kg	D U
Molybdenum	6.200	mg/kg	C J	8.400	mg/kg	C -	6.700	mg/kg	D -
Nickel	15.400	mg/kg	C -	30.100	mg/kg	C -	22.000	mg/kg	D -
Potassium	939.000	mg/kg	C -	1680.000	mg/kg	C -	1880.000	mg/kg	D -
Selenium	0.440	mg/kg	C U	0.500	mg/kg	C U	0.450	mg/kg	D UJ
Silicon	603.000	mg/kg	C J	673.000	mg/kg	C J	875.000	mg/kg	D J
Silver	6.400	mg/kg	C -	9.600	mg/kg	C -	7.100	mg/kg	D -
Sodium	61.900	mg/kg	C -	106.000	mg/kg	C -	131.000	mg/kg	D -
Thallium	0.440	mg/kg	C U	0.500	mg/kg	C U	0.450	mg/kg	D U
Vanadium	32.400	mg/kg	C -	39.100	mg/kg	C -	30.100	mg/kg	D -
Zinc	53.400	mg/kg	C J	82.300	mg/kg	C -	58.600	mg/kg	D -
Volatile Organics									
1,1,1-Trichloroethane	11.000	ug/kg	C U	13.000	ug/kg	C U	12.000	ug/kg	D U
1,1,2,2-Tetrachloroethane	11.000	ug/kg	C U	13.000	ug/kg	C U	12.000	ug/kg	D U
1,1,2-Trichloroethane	11.000	ug/kg	C U	13.000	ug/kg	C U	12.000	ug/kg	D U
1,1-Dichloroethane	11.000	ug/kg	C U	13.000	ug/kg	C U	12.000	ug/kg	D U
1,1-Dichloroethene	11.000	ug/kg	C U	13.000	ug/kg	C U	12.000	ug/kg	D U
1,2-Dichloroethane	11.000	ug/kg	C U	13.000	ug/kg	C U	12.000	ug/kg	D U
1,2-Dichloroethene	11.000	ug/kg	C U	13.000	ug/kg	C U	12.000	ug/kg	D U
1,2-Dichloropropane	11.000	ug/kg	C U	13.000	ug/kg	C U	12.000	ug/kg	D U
2-Butanone	11.000	ug/kg	C UJ	13.000	ug/kg	C U	12.000	ug/kg	D U
2-Hexanone	11.000	ug/kg	C UJ	13.000	ug/kg	C U	12.000	ug/kg	D U
4-Methyl-2-pentanone	11.000	ug/kg	C UJ	13.000	ug/kg	C U	12.000	ug/kg	D U
Acetone	4.000	ug/kg	C J	13.000	ug/kg	C U	12.000	ug/kg	D U
Benzene	11.000	ug/kg	C U	13.000	ug/kg	C U	12.000	ug/kg	D U

5174

TABLE F-6A
(Continued)

PHASE II - CHEMICAL PARAMETERS

BORING NUMBER	11188 (1976)			11186 (1973)			11187 (1974)		
SAMPLE NUMBER	110547			112507			112526		
	4.5-6			4.5-6.5			9-10.5		
SAMPLING DATE	04/02/93			04/12/93			04/13/93		
CHEMICAL PARAMETERS	RESULTS	UNITS	L VQ	RESULTS	UNITS	L VQ	RESULTS	UNITS	L VQ
Volatile Organics									
Bromodichloromethane	11.000	ug/kg	C U	13.000	ug/kg	C U	12.000	ug/kg	D U
Bromoform	11.000	ug/kg	C U	13.000	ug/kg	C U	12.000	ug/kg	D U
Bromomethane	11.000	ug/kg	C U	13.000	ug/kg	C U	12.000	ug/kg	D U
Carbon Tetrachloride	11.000	ug/kg	C U	13.000	ug/kg	C U	12.000	ug/kg	D U
Carbon disulfide	11.000	ug/kg	C U	13.000	ug/kg	C U	12.000	ug/kg	D U
Chlorobenzene	11.000	ug/kg	C U	13.000	ug/kg	C U	12.000	ug/kg	D U
Chloroethane	11.000	ug/kg	C U	13.000	ug/kg	C U	12.000	ug/kg	D U
Chloroform	11.000	ug/kg	C U	13.000	ug/kg	C U	12.000	ug/kg	D U
Chloromethane	11.000	ug/kg	C U	13.000	ug/kg	C U	12.000	ug/kg	D U
Dibromochloromethane	11.000	ug/kg	C U	13.000	ug/kg	C U	12.000	ug/kg	D U
Ethylbenzene	11.000	ug/kg	C U	13.000	ug/kg	C U	12.000	ug/kg	D U
Methylene chloride	27.000	ug/kg	C U	26.000	ug/kg	C U	17.000	ug/kg	D U
Styrene	11.000	ug/kg	C U	13.000	ug/kg	C U	12.000	ug/kg	D U
Tetrachloroethene	11.000	ug/kg	C U	13.000	ug/kg	C U	12.000	ug/kg	D U
Toluene	41.000	ug/kg	C -	13.000	ug/kg	C U	12.000	ug/kg	D U
Trichloroethene	11.000	ug/kg	C U	13.000	ug/kg	C U	12.000	ug/kg	D U
Vinyl Acetate	11.000	ug/kg	C U	13.000	ug/kg	C U	12.000	ug/kg	D U
Vinyl chloride	11.000	ug/kg	C UJ	13.000	ug/kg	C U	12.000	ug/kg	D U
Xylenes, Total	11.000	ug/kg	C U	13.000	ug/kg	C U	12.000	ug/kg	D U
cis-1,3-Dichloropropene	11.000	ug/kg	C U	13.000	ug/kg	C U	12.000	ug/kg	D U
trans-1,3-Dichloropropene	11.000	ug/kg	C U	13.000	ug/kg	C U	12.000	ug/kg	D U
Semivolatile Organics									
1,2,4-Trichlorobenzene	390.000	ug/kg	C UJ	430.000	ug/kg	C U	400.000	ug/kg	D U
1,2-Dichlorobenzene	390.000	ug/kg	C UJ	430.000	ug/kg	C U	400.000	ug/kg	D U
1,3-Dichlorobenzene	390.000	ug/kg	C UJ	430.000	ug/kg	C U	400.000	ug/kg	D U
1,4-Dichlorobenzene	390.000	ug/kg	C UJ	430.000	ug/kg	C U	400.000	ug/kg	D U
2,4,5-Trichlorophenol	940.000	ug/kg	C UJ	2100.000	ug/kg	C U	2000.000	ug/kg	D U
2,4,6-Trichlorophenol	390.000	ug/kg	C UJ	430.000	ug/kg	C U	400.000	ug/kg	D U
2,4-Dichlorophenol	390.000	ug/kg	C UJ	430.000	ug/kg	C U	400.000	ug/kg	D U
2,4-Dimethylphenol	390.000	ug/kg	C UJ	430.000	ug/kg	C U	400.000	ug/kg	D U
2,4-Dinitrophenol	940.000	ug/kg	C UJ	2100.000	ug/kg	C U	2000.000	ug/kg	D U
2,4-Dinitrotoluene	390.000	ug/kg	C UJ	430.000	ug/kg	C U	400.000	ug/kg	D U
2,6-Dinitrotoluene	390.000	ug/kg	C UJ	430.000	ug/kg	C U	400.000	ug/kg	D U
2-Chloronaphthalene	390.000	ug/kg	C UJ	430.000	ug/kg	C U	400.000	ug/kg	D U
2-Chlorophenol	390.000	ug/kg	C UJ	430.000	ug/kg	C U	400.000	ug/kg	D U
2-Methylnaphthalene	390.000	ug/kg	C UJ	430.000	ug/kg	C U	400.000	ug/kg	D U
2-Methylphenol	390.000	ug/kg	C UJ	430.000	ug/kg	C U	400.000	ug/kg	D U
2-Nitroaniline	940.000	ug/kg	C UJ	2100.000	ug/kg	C U	2000.000	ug/kg	D U
2-Nitrophenol	390.000	ug/kg	C UJ	430.000	ug/kg	C U	400.000	ug/kg	D U
3,3'-Dichlorobenzidine	390.000	ug/kg	C UJ	430.000	ug/kg	C U	400.000	ug/kg	D UJ

TABLE F-6A
(Continued)

PHASE II - CHEMICAL PARAMETERS

BORING NUMBER	11188 (1976)				11186 (1973)				11187 (1974)			
SAMPLE NUMBER	110547				112507				112526			
	4.5-6				4.5-6.5				9-10.5			
SAMPLING DATE	04/02/93				04/12/93				04/13/93			
CHEMICAL PARAMETERS	RESULTS	UNITS	L	VQ	RESULTS	UNITS	L	VQ	RESULTS	UNITS	L	VQ
Semivolatile Organics												
3-Nitroaniline	940.000	ug/kg	C	UJ	2100.000	ug/kg	C	U	2000.000	ug/kg	D	U
4,6-Dinitro-2-methylphenol	940.000	ug/kg	C	UJ	2100.000	ug/kg	C	R	2000.000	ug/kg	D	R
4-Bromophenyl phenyl ether	390.000	ug/kg	C	UJ	430.000	ug/kg	C	U	400.000	ug/kg	D	U
4-Chloro-3-methylphenol	390.000	ug/kg	C	UJ	430.000	ug/kg	C	U	400.000	ug/kg	D	U
4-Chlorophenylphenyl ether	390.000	ug/kg	C	UJ	430.000	ug/kg	C	U	400.000	ug/kg	D	U
4-Methylphenol	390.000	ug/kg	C	UJ	430.000	ug/kg	C	U	400.000	ug/kg	D	U
4-Nitroaniline	940.000	ug/kg	C	UJ	2100.000	ug/kg	C	R	2000.000	ug/kg	D	R
4-Nitrophenol	940.000	ug/kg	C	UJ	2100.000	ug/kg	C	U	2000.000	ug/kg	D	U
Acenaphthene	390.000	ug/kg	C	UJ	430.000	ug/kg	C	U	400.000	ug/kg	D	U
Acenaphthylene	390.000	ug/kg	C	UJ	430.000	ug/kg	C	U	400.000	ug/kg	D	U
Anthracene	390.000	ug/kg	C	UJ	430.000	ug/kg	C	U	400.000	ug/kg	D	U
Benzo(a)anthracene	390.000	ug/kg	C	UJ	430.000	ug/kg	C	U	400.000	ug/kg	D	UJ
Benzo(a)pyrene	390.000	ug/kg	C	UJ	430.000	ug/kg	C	U	400.000	ug/kg	D	U
Benzo(b)fluoranthene	390.000	ug/kg	C	UJ	430.000	ug/kg	C	U	400.000	ug/kg	D	U
Benzo(g,h,i)perylene	390.000	ug/kg	C	UJ	430.000	ug/kg	C	U	400.000	ug/kg	D	U
Benzo(k)fluoranthene	390.000	ug/kg	C	UJ	430.000	ug/kg	C	U	400.000	ug/kg	D	U
Benzoic acid	1900.000	ug/kg	C	UJ	2100.000	ug/kg	C	U	1900.000	ug/kg	D	U
Benzyl alcohol	390.000	ug/kg	C	UJ	430.000	ug/kg	C	U	400.000	ug/kg	D	U
Butyl benzyl phthalate	390.000	ug/kg	C	UJ	430.000	ug/kg	C	U	400.000	ug/kg	D	UJ
Carbazole	390.000	ug/kg	C	UJ	430.000	ug/kg	C	U	400.000	ug/kg	D	U
Chrysene	390.000	ug/kg	C	UJ	430.000	ug/kg	C	U	400.000	ug/kg	D	UJ
Di-n-butyl phthalate	390.000	ug/kg	C	UJ	430.000	ug/kg	C	U	400.000	ug/kg	D	U
Di-n-octyl phthalate	390.000	ug/kg	C	UJ	430.000	ug/kg	C	U	400.000	ug/kg	D	U
Dibenzo(a,h)anthracene	390.000	ug/kg	C	UJ	430.000	ug/kg	C	U	400.000	ug/kg	D	U
Dibenzofuran	390.000	ug/kg	C	UJ	430.000	ug/kg	C	U	400.000	ug/kg	D	U
Diethyl phthalate	390.000	ug/kg	C	UJ	430.000	ug/kg	C	U	400.000	ug/kg	D	U
Dimethyl phthalate	390.000	ug/kg	C	UJ	430.000	ug/kg	C	U	400.000	ug/kg	D	U
Fluoranthene	390.000	ug/kg	C	UJ	430.000	ug/kg	C	U	400.000	ug/kg	D	U
Fluorene	390.000	ug/kg	C	UJ	430.000	ug/kg	C	U	400.000	ug/kg	D	U
Hexachlorobenzene	390.000	ug/kg	C	UJ	430.000	ug/kg	C	U	400.000	ug/kg	D	U
Hexachlorobutadiene	390.000	ug/kg	C	UJ	430.000	ug/kg	C	U	400.000	ug/kg	D	U
Hexachlorocyclopentadiene	390.000	ug/kg	C	UJ	430.000	ug/kg	C	U	400.000	ug/kg	D	U
Hexachloroethane	390.000	ug/kg	C	UJ	430.000	ug/kg	C	U	400.000	ug/kg	D	U
Indeno(1,2,3-cd)pyrene	390.000	ug/kg	C	UJ	430.000	ug/kg	C	U	400.000	ug/kg	D	U
Isophorone	390.000	ug/kg	C	UJ	430.000	ug/kg	C	U	400.000	ug/kg	D	U
N-Nitroso-di-n-propylamine	390.000	ug/kg	C	UJ	430.000	ug/kg	C	U	400.000	ug/kg	D	U
N-Nitrosodiphenylamine	390.000	ug/kg	C	UJ	430.000	ug/kg	C	U	400.000	ug/kg	D	U
Naphthalene	390.000	ug/kg	C	UJ	430.000	ug/kg	C	U	400.000	ug/kg	D	U
Nitrobenzene	390.000	ug/kg	C	UJ	430.000	ug/kg	C	U	400.000	ug/kg	D	U
Pentachlorophenol	940.000	ug/kg	C	UJ	2100.000	ug/kg	C	U	2000.000	ug/kg	D	U
Phenanthrene	390.000	ug/kg	C	UJ	430.000	ug/kg	C	U	400.000	ug/kg	D	U
Phenol	390.000	ug/kg	C	UJ	430.000	ug/kg	C	U	400.000	ug/kg	D	U

5174

TABLE F-6A
(Continued)

PHASE II - CHEMICAL PARAMETERS

BORING NUMBER	11188 (1976)			11186 (1973)			11187 (1974)		
SAMPLE NUMBER	110547			112507			112526		
	4.5-6			4.5-6.5			9-10.5		
SAMPLING DATE	04/02/93			04/12/93			04/13/93		
CHEMICAL PARAMETERS	RESULTS	UNITS	L VQ	RESULTS	UNITS	L VQ	RESULTS	UNITS	L VQ
Semivolatile Organics									
Pyrene	390.000	ug/kg	C UJ	430.000	ug/kg	C U	400.000	ug/kg	D UJ
bis(2-Chloroethoxy)methane	390.000	ug/kg	C UJ	430.000	ug/kg	C U	400.000	ug/kg	D U
bis(2-Chloroethyl)ether	390.000	ug/kg	C UJ	430.000	ug/kg	C U	400.000	ug/kg	D U
bis(2-Chloroisopropyl) ether	390.000	ug/kg	C UJ	430.000	ug/kg	C U	400.000	ug/kg	D U
bis(2-Ethylhexyl) phthalate	390.000	ug/kg	C UJ	430.000	ug/kg	C U	400.000	ug/kg	D UJ
p-Chloroaniline	390.000	ug/kg	C UJ	430.000	ug/kg	C U	400.000	ug/kg	D U
Pesticide Organics/PCBs									
4,4'-DDD	3.900	ug/kg	C UJ	4.200	ug/kg	C UJ	4.000	ug/kg	D UJ
4,4'-DDE	3.900	ug/kg	C U	4.200	ug/kg	C U	4.000	ug/kg	D U
4,4'-DDT	3.900	ug/kg	C U	4.200	ug/kg	C U	4.000	ug/kg	D U
Aldrin	2.000	ug/kg	C U	2.200	ug/kg	C U	2.100	ug/kg	D U
Aroclor-1016	39.000	ug/kg	C U	42.000	ug/kg	C U	40.000	ug/kg	D U
Aroclor-1221	79.000	ug/kg	C U	86.000	ug/kg	C U	81.000	ug/kg	D U
Aroclor-1232	39.000	ug/kg	C U	42.000	ug/kg	C U	40.000	ug/kg	D U
Aroclor-1242	39.000	ug/kg	C U	42.000	ug/kg	C U	40.000	ug/kg	D U
Aroclor-1248	39.000	ug/kg	C U	42.000	ug/kg	C U	40.000	ug/kg	D U
Aroclor-1254	39.000	ug/kg	C U	42.000	ug/kg	C U	40.000	ug/kg	D U
Aroclor-1260	39.000	ug/kg	C U	42.000	ug/kg	C U	40.000	ug/kg	D U
Dieldrin	3.900	ug/kg	C U	4.200	ug/kg	C U	4.000	ug/kg	D U
Endosulfan II	3.900	ug/kg	C U	4.200	ug/kg	C U	4.000	ug/kg	D U
Endosulfan sulfate	3.900	ug/kg	C U	4.200	ug/kg	C U	4.000	ug/kg	D U
Endosulfan-I	2.000	ug/kg	C U	2.200	ug/kg	C U	2.100	ug/kg	D U
Endrin	3.900	ug/kg	C U	4.200	ug/kg	C U	4.000	ug/kg	D U
Endrin aldehyde	3.900	ug/kg	C U	4.200	ug/kg	C U	4.000	ug/kg	D U
Endrin ketone	3.900	ug/kg	C U	4.200	ug/kg	C U	4.000	ug/kg	D U
Heptachlor	2.000	ug/kg	C U	2.200	ug/kg	C U	2.100	ug/kg	D U
Heptachlor epoxide	2.000	ug/kg	C U	2.200	ug/kg	C U	2.100	ug/kg	D U
Methoxychlor	20.000	ug/kg	C U	22.000	ug/kg	C U	21.000	ug/kg	D U
Toxaphene	200.000	ug/kg	C U	220.000	ug/kg	C U	210.000	ug/kg	D U
alpha-BHC	2.000	ug/kg	C U	2.200	ug/kg	C U	2.100	ug/kg	D U
alpha-Chlordane	2.000	ug/kg	C U	2.200	ug/kg	C U	2.100	ug/kg	D U
beta-BHC	2.000	ug/kg	C U	2.200	ug/kg	C U	2.100	ug/kg	D U
delta-BHC	2.000	ug/kg	C U	2.200	ug/kg	C U	2.100	ug/kg	D U
gamma-BHC (Lindane)	2.000	ug/kg	C U	2.200	ug/kg	C U	2.100	ug/kg	D U
gamma-Chlordane	2.000	ug/kg	C U	2.200	ug/kg	C U	2.100	ug/kg	D U

0698

5174

TABLE F-6A
(Continued)

PHASE II - CHEMICAL PARAMETERS

BORING NUMBER	11186 (1973)			11188 (1976)			1964		
SAMPLE NUMBER	112514			110556			112648		
	9.5-11			10-11			5-6.5		
SAMPLING DATE	04/12/93			04/02/93			04/17/93		
CHEMICAL PARAMETERS	RESULTS	UNITS	L VQ	RESULTS	UNITS	L VQ	RESULTS	UNITS	L VQ
Inorganics									
Aluminum	11000.000	mg/kg	C -	4840.000	mg/kg	C J	20500.000	mg/kg	C -
Antimony	1.200	mg/kg	C UJ	1.000	mg/kg	C UJ	1.100	mg/kg	C UJ
Arsenic	6.300	mg/kg	C -	9.400	mg/kg	C -	5.500	mg/kg	C J
Barium	63.500	mg/kg	C -	107.000	mg/kg	C -	203.000	mg/kg	C -
Beryllium	0.530	mg/kg	C -	1.200	mg/kg	C U	1.000	mg/kg	C -
Cadmium	1.200	mg/kg	C U	3.100	mg/kg	C U	1.100	mg/kg	C U
Calcium	79500.000	mg/kg	C -	213000.000	mg/kg	C J	10700.000	mg/kg	C -
Chromium	13.400	mg/kg	C -	6.500	mg/kg	C -	22.300	mg/kg	C -
Cobalt	8.800	mg/kg	C -	6.200	mg/kg	C U	12.600	mg/kg	C -
Copper	20.100	mg/kg	C -	11.100	mg/kg	C -	30.800	mg/kg	C -
Cyanide	0.120	mg/kg	C U	0.130	mg/kg	C U	0.120	mg/kg	C U
Iron	24000.000	mg/kg	C -	13300.000	mg/kg	C J	38400.000	mg/kg	C -
Lead	5.600	mg/kg	C J	9.000	mg/kg	C -	17.100	mg/kg	C -
Magnesium	27500.000	mg/kg	C -	31300.000	mg/kg	C -	6280.000	mg/kg	C -
Manganese	488.000	mg/kg	C J	336.000	mg/kg	C J	1140.000	mg/kg	C -
Mercury	0.120	mg/kg	C U	0.110	mg/kg	C U	0.120	mg/kg	C U
Molybdenum	6.900	mg/kg	C -	12.500	mg/kg	C UJ	10.000	mg/kg	C -
Nickel	23.000	mg/kg	C -	12.500	mg/kg	C U	41.700	mg/kg	C -
Potassium	2060.000	mg/kg	C -	769.000	mg/kg	C -	1810.000	mg/kg	C -
Selenium	0.430	mg/kg	C UJ	0.490	mg/kg	C UJ	0.440	mg/kg	C U
Silicon	688.000	mg/kg	C J	462.000	mg/kg	C J	792.000	mg/kg	C -
Silver	6.900	mg/kg	C -	6.200	mg/kg	C U	10.600	mg/kg	C -
Sodium	131.000	mg/kg	C -	138.000	mg/kg	C -	131.000	mg/kg	C -
Thallium	0.430	mg/kg	C -	0.490	mg/kg	C U	0.440	mg/kg	C U
Vanadium	27.700	mg/kg	C -	16.200	mg/kg	C -	47.900	mg/kg	C -
Zinc	59.700	mg/kg	C -	34.500	mg/kg	C J	73.700	mg/kg	C -
Volatile Organics									
1,1,1-Trichloroethane	12.000	ug/kg	C U	12.000	ug/kg	C U	12.000	ug/kg	C U
1,1,2,2-Tetrachloroethane	12.000	ug/kg	C U	12.000	ug/kg	C U	12.000	ug/kg	C U
1,1,2-Trichloroethane	12.000	ug/kg	C U	12.000	ug/kg	C U	12.000	ug/kg	C U
1,1-Dichloroethane	12.000	ug/kg	C U	12.000	ug/kg	C U	12.000	ug/kg	C U
1,1-Dichloroethene	12.000	ug/kg	C U	12.000	ug/kg	C U	12.000	ug/kg	C U
1,2-Dichloroethane	12.000	ug/kg	C U	12.000	ug/kg	C U	12.000	ug/kg	C U
1,2-Dichloroethene	12.000	ug/kg	C U	12.000	ug/kg	C U	12.000	ug/kg	C U
1,2-Dichloropropane	12.000	ug/kg	C U	12.000	ug/kg	C U	12.000	ug/kg	C U
2-Butanone	12.000	ug/kg	C U	6.000	ug/kg	C J	12.000	ug/kg	C U
2-Hexanone	12.000	ug/kg	C U	12.000	ug/kg	C UJ	12.000	ug/kg	C UJ
4-Methyl-2-pentanone	12.000	ug/kg	C U	12.000	ug/kg	C UJ	12.000	ug/kg	C U
Acetone	12.000	ug/kg	C U	45.000	ug/kg	C J	7.000	ug/kg	C J
Benzene	12.000	ug/kg	C U	12.000	ug/kg	C U	12.000	ug/kg	C U

0699

5174

TABLE F-6A
(Continued)

PHASE II - CHEMICAL PARAMETERS

BORING NUMBER	11186 (1973)			11188 (1976)			1964		
SAMPLE NUMBER	112514			110556			112648		
	9.5-11			10-11			5-6.5		
SAMPLING DATE	04/12/93			04/02/93			04/17/93		
CHEMICAL PARAMETERS	RESULTS	UNITS	L VQ	RESULTS	UNITS	L VQ	RESULTS	UNITS	L VQ
Volatile Organics									
Bromodichloromethane	12.000	ug/kg	C U	12.000	ug/kg	C U	12.000	ug/kg	C U
Bromoform	12.000	ug/kg	C U	12.000	ug/kg	C U	12.000	ug/kg	C U
Bromomethane	12.000	ug/kg	C U	12.000	ug/kg	C U	12.000	ug/kg	C UJ
Carbon Tetrachloride	12.000	ug/kg	C U	12.000	ug/kg	C U	12.000	ug/kg	C U
Carbon disulfide	12.000	ug/kg	C U	12.000	ug/kg	C U	12.000	ug/kg	C U
Chlorobenzene	12.000	ug/kg	C U	12.000	ug/kg	C U	12.000	ug/kg	C U
Chloroethane	12.000	ug/kg	C U	12.000	ug/kg	C U	12.000	ug/kg	C U
Chloroform	12.000	ug/kg	C U	12.000	ug/kg	C U	12.000	ug/kg	C U
Chloromethane	12.000	ug/kg	C U	12.000	ug/kg	C U	12.000	ug/kg	C U
Dibromochloromethane	12.000	ug/kg	C U	12.000	ug/kg	C U	12.000	ug/kg	C U
Ethylbenzene	12.000	ug/kg	C U	12.000	ug/kg	C U	12.000	ug/kg	C U
Methylene chloride	16.000	ug/kg	C U	12.000	ug/kg	C U	17.000	ug/kg	C U
Styrene	12.000	ug/kg	C U	12.000	ug/kg	C U	12.000	ug/kg	C U
Tetrachloroethene	12.000	ug/kg	C U	12.000	ug/kg	C U	12.000	ug/kg	C U
Toluene	12.000	ug/kg	C U	8.000	ug/kg	C J	3.000	ug/kg	C J
Trichloroethene	12.000	ug/kg	C U	12.000	ug/kg	C U	12.000	ug/kg	C U
Vinyl Acetate	12.000	ug/kg	C U	12.000	ug/kg	C U	12.000	ug/kg	C UJ
Vinyl chloride	12.000	ug/kg	C U	12.000	ug/kg	C UJ	12.000	ug/kg	C U
Xylenes, Total	12.000	ug/kg	C U	12.000	ug/kg	C U	12.000	ug/kg	C U
cis-1,3-Dichloropropene	12.000	ug/kg	C U	12.000	ug/kg	C U	12.000	ug/kg	C U
trans-1,3-Dichloropropene	12.000	ug/kg	C U	12.000	ug/kg	C U	12.000	ug/kg	C U
Semivolatile Organics									
1,2,4-Trichlorobenzene	420.000	ug/kg	C U	430.000	ug/kg	C UJ	420.000	ug/kg	C U
1,2-Dichlorobenzene	420.000	ug/kg	C U	430.000	ug/kg	C UJ	420.000	ug/kg	C U
1,3-Dichlorobenzene	420.000	ug/kg	C U	430.000	ug/kg	C UJ	420.000	ug/kg	C U
1,4-Dichlorobenzene	420.000	ug/kg	C U	430.000	ug/kg	C UJ	420.000	ug/kg	C U
2,4,5-Trichlorophenol	2100.000	ug/kg	C U	1000.000	ug/kg	C UJ	2000.000	ug/kg	C U
2,4,6-Trichlorophenol	420.000	ug/kg	C U	430.000	ug/kg	C UJ	420.000	ug/kg	C U
2,4-Dichlorophenol	420.000	ug/kg	C U	430.000	ug/kg	C UJ	420.000	ug/kg	C U
2,4-Dimethylphenol	420.000	ug/kg	C U	430.000	ug/kg	C UJ	420.000	ug/kg	C U
2,4-Dinitrophenol	2100.000	ug/kg	C U	1000.000	ug/kg	C UJ	2000.000	ug/kg	C UJ
2,4-Dinitrotoluene	420.000	ug/kg	C U	430.000	ug/kg	C UJ	420.000	ug/kg	C U
2,6-Dinitrotoluene	420.000	ug/kg	C U	430.000	ug/kg	C UJ	420.000	ug/kg	C U
2-Chloronaphthalene	420.000	ug/kg	C U	430.000	ug/kg	C UJ	420.000	ug/kg	C U
2-Chlorophenol	420.000	ug/kg	C U	430.000	ug/kg	C UJ	420.000	ug/kg	C U
2-Methylnaphthalene	420.000	ug/kg	C U	430.000	ug/kg	C UJ	420.000	ug/kg	C U
2-Methylphenol	420.000	ug/kg	C U	430.000	ug/kg	C UJ	420.000	ug/kg	C U
2-Nitroaniline	2100.000	ug/kg	C U	1000.000	ug/kg	C UJ	2000.000	ug/kg	C U
2-Nitrophenol	420.000	ug/kg	C U	430.000	ug/kg	C UJ	420.000	ug/kg	C U
3,3'-Dichlorobenzidine	420.000	ug/kg	C U	430.000	ug/kg	C UJ	420.000	ug/kg	C U

TABLE F-6A
(Continued)

PHASE II - CHEMICAL PARAMETERS

BORING NUMBER	11186 (1973)			11188 (1976)			1964		
SAMPLE NUMBER	112514			110556			112648		
	9.5-11			10-11			5-6.5		
SAMPLING DATE	04/12/93			04/02/93			04/17/93		
CHEMICAL PARAMETERS	RESULTS	UNITS	L VQ	RESULTS	UNITS	L VQ	RESULTS	UNITS	L VQ
Semivolatile Organics									
3-Nitroaniline	2100.000	ug/kg	C U	1000.000	ug/kg	C UJ	2000.000	ug/kg	C U
4,6-Dinitro-2-methylphenol	2100.000	ug/kg	C R	1000.000	ug/kg	C UJ	2000.000	ug/kg	C UJ
4-Bromophenyl phenyl ether	420.000	ug/kg	C U	430.000	ug/kg	C UJ	420.000	ug/kg	C U
4-Chloro-3-methylphenol	420.000	ug/kg	C U	430.000	ug/kg	C UJ	420.000	ug/kg	C U
4-Chlorophenylphenyl ether	420.000	ug/kg	C U	430.000	ug/kg	C UJ	420.000	ug/kg	C U
4-Methylphenol	420.000	ug/kg	C U	430.000	ug/kg	C UJ	420.000	ug/kg	C U
4-Nitroaniline	2100.000	ug/kg	C R	1000.000	ug/kg	C UJ	2000.000	ug/kg	C U
4-Nitrophenol	2100.000	ug/kg	C U	1000.000	ug/kg	C UJ	2000.000	ug/kg	C UJ
Acenaphthene	420.000	ug/kg	C U	430.000	ug/kg	C UJ	420.000	ug/kg	C U
Acenaphthylene	420.000	ug/kg	C U	430.000	ug/kg	C UJ	420.000	ug/kg	C U
Anthracene	420.000	ug/kg	C U	430.000	ug/kg	C UJ	420.000	ug/kg	C U
Benzo(a)anthracene	420.000	ug/kg	C U	430.000	ug/kg	C UJ	420.000	ug/kg	C U
Benzo(a)pyrene	420.000	ug/kg	C U	430.000	ug/kg	C UJ	420.000	ug/kg	C U
Benzo(b)fluoranthene	420.000	ug/kg	C U	430.000	ug/kg	C UJ	420.000	ug/kg	C U
Benzo(g,h,i)perylene	420.000	ug/kg	C U	430.000	ug/kg	C UJ	420.000	ug/kg	C U
Benzo(k)fluoranthene	420.000	ug/kg	C U	430.000	ug/kg	C UJ	420.000	ug/kg	C U
Benzoic acid	2000.000	ug/kg	C U	2100.000	ug/kg	C UJ	2000.000	ug/kg	C UJ
Benzyl alcohol	420.000	ug/kg	C U	430.000	ug/kg	C UJ	420.000	ug/kg	C U
Butyl benzyl phthalate	420.000	ug/kg	C U	430.000	ug/kg	C UJ	420.000	ug/kg	C U
Carbazole	420.000	ug/kg	C U	430.000	ug/kg	C UJ	420.000	ug/kg	C U
Chrysene	420.000	ug/kg	C U	430.000	ug/kg	C UJ	420.000	ug/kg	C U
Di-n-butyl phthalate	420.000	ug/kg	C U	430.000	ug/kg	C UJ	420.000	ug/kg	C U
Di-n-octyl phthalate	420.000	ug/kg	C U	430.000	ug/kg	C UJ	420.000	ug/kg	C UJ
Dibenzo(a,h)anthracene	420.000	ug/kg	C U	430.000	ug/kg	C UJ	420.000	ug/kg	C U
Dibenzofuran	420.000	ug/kg	C U	430.000	ug/kg	C UJ	420.000	ug/kg	C U
Diethyl phthalate	420.000	ug/kg	C U	430.000	ug/kg	C UJ	420.000	ug/kg	C U
Dimethyl phthalate	420.000	ug/kg	C U	430.000	ug/kg	C UJ	420.000	ug/kg	C U
Fluoranthene	420.000	ug/kg	C U	430.000	ug/kg	C UJ	420.000	ug/kg	C U
Fluorene	420.000	ug/kg	C U	430.000	ug/kg	C UJ	420.000	ug/kg	C U
Hexachlorobenzene	420.000	ug/kg	C U	430.000	ug/kg	C UJ	420.000	ug/kg	C U
Hexachlorobutadiene	420.000	ug/kg	C U	430.000	ug/kg	C UJ	420.000	ug/kg	C U
Hexachlorocyclopentadiene	420.000	ug/kg	C U	430.000	ug/kg	C UJ	420.000	ug/kg	C U
Hexachloroethane	420.000	ug/kg	C U	430.000	ug/kg	C UJ	420.000	ug/kg	C U
Indeno(1,2,3-cd)pyrene	420.000	ug/kg	C U	430.000	ug/kg	C UJ	420.000	ug/kg	C U
Isophorone	420.000	ug/kg	C U	430.000	ug/kg	C UJ	420.000	ug/kg	C U
N-Nitroso-di-n-propylamine	420.000	ug/kg	C U	430.000	ug/kg	C UJ	420.000	ug/kg	C U
N-Nitrosodiphenylamine	420.000	ug/kg	C U	430.000	ug/kg	C UJ	420.000	ug/kg	C U
Naphthalene	420.000	ug/kg	C U	430.000	ug/kg	C UJ	420.000	ug/kg	C U
Nitrobenzene	420.000	ug/kg	C U	430.000	ug/kg	C UJ	420.000	ug/kg	C U
Pentachlorophenol	2100.000	ug/kg	C U	1000.000	ug/kg	C UJ	2000.000	ug/kg	C U
Phenanthrene	420.000	ug/kg	C U	430.000	ug/kg	C UJ	420.000	ug/kg	C U
Phenol	420.000	ug/kg	C U	430.000	ug/kg	C UJ	420.000	ug/kg	C U

TABLE F-6A
(Continued)

PHASE II - CHEMICAL PARAMETERS

BORING NUMBER	11186 (1973)			11188 (1976)			1964		
SAMPLE NUMBER	112514			110556			112648		
	9.5-11			10-11			5-6.5		
SAMPLING DATE	04/12/93			04/02/93			04/17/93		
CHEMICAL PARAMETERS	RESULTS	UNITS	L VQ	RESULTS	UNITS	L VQ	RESULTS	UNITS	L VQ
Semivolatile Organics									
Pyrene	420.000	ug/kg	C U	430.000	ug/kg	C UJ	420.000	ug/kg	C U
bis(2-Chloroethoxy)methane	420.000	ug/kg	C U	430.000	ug/kg	C UJ	420.000	ug/kg	C U
bis(2-Chloroethyl)ether	420.000	ug/kg	C U	430.000	ug/kg	C UJ	420.000	ug/kg	C U
bis(2-Chloroisopropyl) ether	420.000	ug/kg	C U	430.000	ug/kg	C UJ	420.000	ug/kg	C U
bis(2-Ethylhexyl) phthalate	420.000	ug/kg	C U	430.000	ug/kg	C UJ	420.000	ug/kg	C U
p-Chloroaniline	420.000	ug/kg	C U	430.000	ug/kg	C UJ	420.000	ug/kg	C U
Pesticide Organics/PCBs									
4,4'-DDD	4.300	ug/kg	C UJ	4.200	ug/kg	C UJ	4.100	ug/kg	C U
4,4'-DDE	4.300	ug/kg	C U	4.200	ug/kg	C U	4.100	ug/kg	C U
4,4'-DDT	4.300	ug/kg	C U	4.200	ug/kg	C U	4.100	ug/kg	C U
Aldrin	2.200	ug/kg	C U	2.200	ug/kg	C U	2.100	ug/kg	C U
Aroclor-1016	43.000	ug/kg	C U	42.000	ug/kg	C U	41.000	ug/kg	C U
Aroclor-1221	86.000	ug/kg	C U	85.000	ug/kg	C U	84.000	ug/kg	C U
Aroclor-1232	43.000	ug/kg	C U	42.000	ug/kg	C U	41.000	ug/kg	C U
Aroclor-1242	43.000	ug/kg	C U	42.000	ug/kg	C U	41.000	ug/kg	C U
Aroclor-1248	43.000	ug/kg	C U	42.000	ug/kg	C U	41.000	ug/kg	C U
Aroclor-1254	43.000	ug/kg	C U	42.000	ug/kg	C U	41.000	ug/kg	C U
Aroclor-1260	43.000	ug/kg	C U	42.000	ug/kg	C U	41.000	ug/kg	C U
Dieldrin	4.300	ug/kg	C U	4.200	ug/kg	C U	4.100	ug/kg	C U
Endosulfan II	4.300	ug/kg	C U	4.200	ug/kg	C U	4.100	ug/kg	C U
Endosulfan sulfate	4.300	ug/kg	C U	4.200	ug/kg	C U	4.100	ug/kg	C U
Endosulfan-I	2.200	ug/kg	C U	2.200	ug/kg	C U	2.100	ug/kg	C U
Endrin	4.300	ug/kg	C U	4.200	ug/kg	C U	4.100	ug/kg	C U
Endrin aldehyde	4.300	ug/kg	C U	4.200	ug/kg	C U	4.100	ug/kg	C U
Endrin ketone	4.300	ug/kg	C U	4.200	ug/kg	C U	4.100	ug/kg	C U
Heptachlor	2.200	ug/kg	C U	2.200	ug/kg	C U	2.100	ug/kg	C U
Heptachlor epoxide	2.200	ug/kg	C U	2.200	ug/kg	C U	2.100	ug/kg	C U
Methoxychlor	22.000	ug/kg	C U	22.000	ug/kg	C U	21.000	ug/kg	C U
Toxaphene	220.000	ug/kg	C U	220.000	ug/kg	C U	210.000	ug/kg	C U
alpha-BHC	2.200	ug/kg	C U	2.200	ug/kg	C U	2.100	ug/kg	C U
alpha-Chlordane	2.200	ug/kg	C U	2.200	ug/kg	C U	2.100	ug/kg	C U
beta-BHC	2.200	ug/kg	C U	2.200	ug/kg	C U	2.100	ug/kg	C U
delta-BHC	2.200	ug/kg	C U	2.200	ug/kg	C U	2.100	ug/kg	C U
gamma-BHC (Lindane)	2.200	ug/kg	C U	2.200	ug/kg	C U	2.100	ug/kg	C U
gamma-Chlordane	2.200	ug/kg	C U	2.200	ug/kg	C U	2.100	ug/kg	C U

TABLE F-6A
(Continued)

PHASE II - CHEMICAL PARAMETERS

BORING NUMBER	1964			1965			1965		
SAMPLE NUMBER	112685			112737			112763		
	29-30.5			4-6			26.5-28		
SAMPLING DATE	04/17/93			04/20/93			04/21/93		
CHEMICAL PARAMETERS	RESULTS	UNITS	L VQ	RESULTS	UNITS	L VQ	RESULTS	UNITS	L VQ
Inorganics									
Aluminum	2680.000	mg/kg	C -	9150.000	mg/kg	C -	2870.000	mg/kg	C -
Antimony	1.100	mg/kg	C UJ	1.100	mg/kg	C UJ	0.840	mg/kg	C UJ
Arsenic	6.200	mg/kg	C -	7.500	mg/kg	C -	4.100	mg/kg	C -
Barium	15.900	mg/kg	C -	60.700	mg/kg	C -	12.800	mg/kg	C -
Beryllium	0.420	mg/kg	C U	0.440	mg/kg	C U	1.000	mg/kg	C U
Cadmium	1.100	mg/kg	C U	1.100	mg/kg	C U	2.500	mg/kg	C U
Calcium	148000.000	mg/kg	C -	105000.000	mg/kg	C -	147000.000	mg/kg	C -
Chromium	5.000	mg/kg	C -	10.000	mg/kg	C -	5.000	mg/kg	C U
Cobalt	3.000	mg/kg	C -	6.700	mg/kg	C -	5.000	mg/kg	C U
Copper	9.500	mg/kg	C -	14.400	mg/kg	C -	8.300	mg/kg	C -
Cyanide	0.110	mg/kg	C U	0.110	mg/kg	C U	0.100	mg/kg	C U
Iron	7300.000	mg/kg	C -	18800.000	mg/kg	C -	7310.000	mg/kg	C -
Lead	6.400	mg/kg	C -	13.200	mg/kg	C -	5.400	mg/kg	C -
Magnesium	29400.000	mg/kg	C -	25800.000	mg/kg	C -	32400.000	mg/kg	C -
Manganese	344.000	mg/kg	C -	592.000	mg/kg	C -	329.000	mg/kg	C -
Mercury	0.100	mg/kg	C U	0.170	mg/kg	C -	0.090	mg/kg	C U
Molybdenum	4.200	mg/kg	C U	5.200	mg/kg	C -	10.100	mg/kg	C U
Nickel	8.800	mg/kg	C -	16.800	mg/kg	C -	10.100	mg/kg	C U
Potassium	669.000	mg/kg	C -	1570.000	mg/kg	C -	520.000	mg/kg	C -
Selenium	0.420	mg/kg	C UJ	0.430	mg/kg	C U	0.360	mg/kg	C UJ
Silicon	529.000	mg/kg	C -	720.000	mg/kg	C -	456.000	mg/kg	C -
Silver	2.100	mg/kg	C U	4.500	mg/kg	C -	5.000	mg/kg	C U
Sodium	176.000	mg/kg	C -	159.000	mg/kg	C -	190.000	mg/kg	C -
Thallium	0.420	mg/kg	C U	0.430	mg/kg	C U	0.360	mg/kg	C U
Vanadium	10.300	mg/kg	C -	22.800	mg/kg	C -	9.800	mg/kg	C -
Zinc	24.800	mg/kg	C -	43.200	mg/kg	C -	27.800	mg/kg	C -
Volatile Organics									
1,1,1-Trichloroethane	11.000	ug/kg	C U	11.000	ug/kg	C U	10.000	ug/kg	C U
1,1,2,2-Tetrachloroethane	11.000	ug/kg	C U	11.000	ug/kg	C U	10.000	ug/kg	C U
1,1,2-Trichloroethane	11.000	ug/kg	C U	11.000	ug/kg	C U	10.000	ug/kg	C U
1,1-Dichloroethane	11.000	ug/kg	C U	11.000	ug/kg	C U	10.000	ug/kg	C U
1,1-Dichloroethene	11.000	ug/kg	C U	11.000	ug/kg	C U	10.000	ug/kg	C U
1,2-Dichloroethane	11.000	ug/kg	C U	11.000	ug/kg	C UJ	10.000	ug/kg	C U
1,2-Dichloroethene	11.000	ug/kg	C U	11.000	ug/kg	C U	10.000	ug/kg	C U
1,2-Dichloropropane	11.000	ug/kg	C U	11.000	ug/kg	C U	10.000	ug/kg	C U
2-Butanone	1.000	ug/kg	C J	11.000	ug/kg	C U	10.000	ug/kg	C UJ
2-Hexanone	11.000	ug/kg	C UJ	11.000	ug/kg	C UJ	10.000	ug/kg	C UJ
4-Methyl-2-pentanone	11.000	ug/kg	C U	11.000	ug/kg	C UJ	10.000	ug/kg	C UJ
Acetone	11.000	ug/kg	C UJ	11.000	ug/kg	C U	10.000	ug/kg	C U
Benzene	11.000	ug/kg	C U	11.000	ug/kg	C U	10.000	ug/kg	C U

TABLE F-6A
(Continued)

PHASE II - CHEMICAL PARAMETERS

BORING NUMBER	1964			1965			1965		
SAMPLE NUMBER	112685			112737			112763		
	29-30.5			4-6			26.5-28		
SAMPLING DATE	04/17/93			04/20/93			04/21/93		
CHEMICAL PARAMETERS	RESULTS	UNITS	L VQ	RESULTS	UNITS	L VQ	RESULTS	UNITS	L VQ
Volatile Organics									
Bromodichloromethane	11.000	ug/kg	C U	11.000	ug/kg	C U	10.000	ug/kg	C U
Bromoform	11.000	ug/kg	C U	11.000	ug/kg	C U	10.000	ug/kg	C U
Bromomethane	11.000	ug/kg	C UJ	11.000	ug/kg	C UJ	10.000	ug/kg	C UJ
Carbon Tetrachloride	11.000	ug/kg	C U	11.000	ug/kg	C U	10.000	ug/kg	C U
Carbon disulfide	11.000	ug/kg	C U	11.000	ug/kg	C UJ	10.000	ug/kg	C U
Chlorobenzene	11.000	ug/kg	C U	11.000	ug/kg	C U	10.000	ug/kg	C U
Chloroethane	11.000	ug/kg	C U	11.000	ug/kg	C UJ	10.000	ug/kg	C UJ
Chloroform	11.000	ug/kg	C U	11.000	ug/kg	C U	10.000	ug/kg	C U
Chloromethane	11.000	ug/kg	C U	11.000	ug/kg	C UJ	10.000	ug/kg	C UJ
Dibromochloromethane	11.000	ug/kg	C U	11.000	ug/kg	C U	10.000	ug/kg	C U
Ethylbenzene	11.000	ug/kg	C U	11.000	ug/kg	C U	10.000	ug/kg	C U
Methylene chloride	19.000	ug/kg	C U	11.000	ug/kg	C U	10.000	ug/kg	C U
Styrene	11.000	ug/kg	C U	11.000	ug/kg	C U	10.000	ug/kg	C U
Tetrachloroethene	11.000	ug/kg	C U	11.000	ug/kg	C U	10.000	ug/kg	C U
Toluene	20.000	ug/kg	C -	3.000	ug/kg	C J	1.000	ug/kg	C J
Trichloroethene	11.000	ug/kg	C U	11.000	ug/kg	C U	10.000	ug/kg	C U
Vinyl Acetate	11.000	ug/kg	C UJ	11.000	ug/kg	C UJ	10.000	ug/kg	C UJ
Vinyl chloride	11.000	ug/kg	C U	11.000	ug/kg	C U	10.000	ug/kg	C U
Xylenes, Total	11.000	ug/kg	C U	11.000	ug/kg	C U	10.000	ug/kg	C U
cis-1,3-Dichloropropene	11.000	ug/kg	C U	11.000	ug/kg	C U	10.000	ug/kg	C U
trans-1,3-Dichloropropene	11.000	ug/kg	C U	11.000	ug/kg	C U	10.000	ug/kg	C U
Semivolatile Organics									
1,2,4-Trichlorobenzene	350.000	ug/kg	C U	370.000	ug/kg	C U	350.000	ug/kg	C U
1,2-Dichlorobenzene	350.000	ug/kg	C U	370.000	ug/kg	C U	350.000	ug/kg	C U
1,3-Dichlorobenzene	350.000	ug/kg	C U	370.000	ug/kg	C U	350.000	ug/kg	C U
1,4-Dichlorobenzene	350.000	ug/kg	C U	370.000	ug/kg	C U	350.000	ug/kg	C U
2,4,5-Trichlorophenol	1700.000	ug/kg	C U	900.000	ug/kg	C U	850.000	ug/kg	C U
2,4,6-Trichlorophenol	350.000	ug/kg	C U	370.000	ug/kg	C U	350.000	ug/kg	C U
2,4-Dichlorophenol	350.000	ug/kg	C U	370.000	ug/kg	C U	350.000	ug/kg	C U
2,4-Dimethylphenol	350.000	ug/kg	C U	370.000	ug/kg	C U	350.000	ug/kg	C U
2,4-Dinitrophenol	1700.000	ug/kg	C UJ	1800.000	ug/kg	C UJ	1700.000	ug/kg	C R
2,4-Dinitrotoluene	350.000	ug/kg	C U	370.000	ug/kg	C U	350.000	ug/kg	C UJ
2,6-Dinitrotoluene	350.000	ug/kg	C U	370.000	ug/kg	C U	350.000	ug/kg	C U
2-Benzyl-4-chlorophenol	NA			NA			350.000	ug/kg	C U
2-Chloronaphthalene	350.000	ug/kg	C U	370.000	ug/kg	C U	350.000	ug/kg	C U
2-Chlorophenol	350.000	ug/kg	C U	370.000	ug/kg	C U	350.000	ug/kg	C U
2-Methylnaphthalene	350.000	ug/kg	C U	370.000	ug/kg	C U	350.000	ug/kg	C U
2-Methylphenol	350.000	ug/kg	C U	370.000	ug/kg	C U	350.000	ug/kg	C U
2-Nitroaniline	1700.000	ug/kg	C U	900.000	ug/kg	C U	850.000	ug/kg	C U
2-Nitrophenol	350.000	ug/kg	C U	370.000	ug/kg	C U	350.000	ug/kg	C U

TABLE F-6A
(Continued)

PHASE II - CHEMICAL PARAMETERS

BORING NUMBER	1964			1965			1965		
SAMPLE NUMBER	112685			112737			112763		
	29-30.5			4-6			26.5-28		
SAMPLING DATE	04/17/93			04/20/93			04/21/93		
CHEMICAL PARAMETERS	RESULTS	UNITS	L VQ	RESULTS	UNITS	L VQ	RESULTS	UNITS	L VQ
Semivolatile Organics									
3,3'-Dichlorobenzidine	350.000	ug/kg	C U	370.000	ug/kg	C U	350.000	ug/kg	C U
3-Nitroaniline	1700.000	ug/kg	C U	900.000	ug/kg	C U	850.000	ug/kg	C U
4,6-Dinitro-2-methylphenol	1700.000	ug/kg	C UJ	900.000	ug/kg	C U	850.000	ug/kg	C R
4-Bromophenyl phenyl ether	350.000	ug/kg	C U	370.000	ug/kg	C U	350.000	ug/kg	C U
4-Chloro-3-methylphenol	350.000	ug/kg	C U	370.000	ug/kg	C U	350.000	ug/kg	C U
4-Chlorophenylphenyl ether	350.000	ug/kg	C U	370.000	ug/kg	C U	350.000	ug/kg	C U
4-Methylphenol	350.000	ug/kg	C U	370.000	ug/kg	C U	350.000	ug/kg	C U
4-Nitroaniline	1700.000	ug/kg	C U	900.000	ug/kg	C U	850.000	ug/kg	C U
4-Nitrophenol	1700.000	ug/kg	C UJ	900.000	ug/kg	C UJ	850.000	ug/kg	C UJ
Acenaphthene	350.000	ug/kg	C U	370.000	ug/kg	C U	350.000	ug/kg	C U
Acenaphthylene	350.000	ug/kg	C U	370.000	ug/kg	C U	350.000	ug/kg	C U
Anthracene	350.000	ug/kg	C U	370.000	ug/kg	C U	350.000	ug/kg	C U
Benzo(a)anthracene	350.000	ug/kg	C U	370.000	ug/kg	C U	350.000	ug/kg	C U
Benzo(a)pyrene	350.000	ug/kg	C U	370.000	ug/kg	C U	350.000	ug/kg	C U
Benzo(b)fluoranthene	350.000	ug/kg	C U	370.000	ug/kg	C U	350.000	ug/kg	C U
Benzo(g,h,i)perylene	350.000	ug/kg	C U	370.000	ug/kg	C U	350.000	ug/kg	C U
Benzo(k)fluoranthene	350.000	ug/kg	C U	370.000	ug/kg	C U	350.000	ug/kg	C U
Benzoic acid	1700.000	ug/kg	C UJ	1800.000	ug/kg	C UJ	1700.000	ug/kg	C R
Benzyl alcohol	350.000	ug/kg	C U	370.000	ug/kg	C U	350.000	ug/kg	C UJ
Butyl benzyl phthalate	350.000	ug/kg	C U	370.000	ug/kg	C U	350.000	ug/kg	C U
Carbazole	350.000	ug/kg	C U	370.000	ug/kg	C U	350.000	ug/kg	C U
Chrysene	350.000	ug/kg	C U	370.000	ug/kg	C U	350.000	ug/kg	C U
Di-n-butyl phthalate	350.000	ug/kg	C U	370.000	ug/kg	C U	350.000	ug/kg	C U
Di-n-octyl phthalate	350.000	ug/kg	C UJ	370.000	ug/kg	C UJ	350.000	ug/kg	C U
Dibenzo(a,h)anthracene	350.000	ug/kg	C U	370.000	ug/kg	C U	350.000	ug/kg	C U
Dibenzofuran	350.000	ug/kg	C U	370.000	ug/kg	C U	350.000	ug/kg	C U
Diethyl phthalate	350.000	ug/kg	C U	370.000	ug/kg	C U	350.000	ug/kg	C U
Dimethyl phthalate	350.000	ug/kg	C U	370.000	ug/kg	C U	350.000	ug/kg	C U
Fluoranthene	350.000	ug/kg	C U	370.000	ug/kg	C U	350.000	ug/kg	C U
Fluorene	350.000	ug/kg	C U	370.000	ug/kg	C U	350.000	ug/kg	C U
Hexachlorobenzene	350.000	ug/kg	C U	370.000	ug/kg	C U	350.000	ug/kg	C U
Hexachlorobutadiene	350.000	ug/kg	C U	370.000	ug/kg	C U	350.000	ug/kg	C U
Hexachlorocyclopentadiene	350.000	ug/kg	C U	370.000	ug/kg	C UJ	350.000	ug/kg	C UJ
Hexachloroethane	350.000	ug/kg	C U	370.000	ug/kg	C U	350.000	ug/kg	C U
Indeno(1,2,3-cd)pyrene	350.000	ug/kg	C U	370.000	ug/kg	C U	350.000	ug/kg	C U
Isophorone	350.000	ug/kg	C U	370.000	ug/kg	C U	350.000	ug/kg	C U
N-Nitroso-di-n-propylamine	350.000	ug/kg	C U	370.000	ug/kg	C U	350.000	ug/kg	C U
N-Nitrosodimethylamine	NA			NA			350.000	ug/kg	C U
N-Nitrosodiphenylamine	350.000	ug/kg	C U	370.000	ug/kg	C U	350.000	ug/kg	C U
Naphthalene	350.000	ug/kg	C U	370.000	ug/kg	C U	350.000	ug/kg	C U
Nitrobenzene	350.000	ug/kg	C U	370.000	ug/kg	C U	350.000	ug/kg	C U
Pentachlorophenol	1700.000	ug/kg	C U	900.000	ug/kg	C U	850.000	ug/kg	C U

TABLE F-6A
(Continued)

PHASE II - CHEMICAL PARAMETERS

BORING NUMBER	1964			1965			1965		
SAMPLE NUMBER	112685			112737			112763		
	29-30.5			4-6			26.5-28		
SAMPLING DATE	04/17/93			04/20/93			04/21/93		
CHEMICAL PARAMETERS	RESULTS	UNITS	L VQ	RESULTS	UNITS	L VQ	RESULTS	UNITS	L VQ
Semivolatile Organics									
Phenanthrene	350.000	ug/kg	C U	370.000	ug/kg	C U	350.000	ug/kg	C U
Phenol	350.000	ug/kg	C U	370.000	ug/kg	C U	350.000	ug/kg	C U
Pyrene	350.000	ug/kg	C U	370.000	ug/kg	C U	350.000	ug/kg	C U
Tributyl phosphate	NA			NA			350.000	ug/kg	C U
bis(2-Chloroethoxy)methane	350.000	ug/kg	C U	370.000	ug/kg	C U	350.000	ug/kg	C U
bis(2-Chloroethyl)ether	350.000	ug/kg	C U	370.000	ug/kg	C U	350.000	ug/kg	C U
bis(2-Chloroisopropyl) ether	350.000	ug/kg	C U	370.000	ug/kg	C UJ	350.000	ug/kg	C U
bis(2-Ethylhexyl) phthalate	68.000	ug/kg	C J	44.000	ug/kg	C J	350.000	ug/kg	C U
p-Chloroaniline	350.000	ug/kg	C U	370.000	ug/kg	C U	350.000	ug/kg	C U
Pesticide Organics/PCBs									
4,4'-DDD	3.600	ug/kg	C U	3.700	ug/kg	C U	3.500	ug/kg	C U
4,4'-DDE	3.600	ug/kg	C U	3.700	ug/kg	C U	3.500	ug/kg	C U
4,4'-DDT	3.600	ug/kg	C U	3.700	ug/kg	C U	3.500	ug/kg	C U
Aldrin	1.800	ug/kg	C U	1.900	ug/kg	C U	1.800	ug/kg	C U
Aroclor-1016	36.000	ug/kg	C U	37.000	ug/kg	C U	35.000	ug/kg	C U
Aroclor-1221	73.000	ug/kg	C U	75.000	ug/kg	C U	70.000	ug/kg	C U
Aroclor-1232	36.000	ug/kg	C U	37.000	ug/kg	C U	35.000	ug/kg	C U
Aroclor-1242	36.000	ug/kg	C U	37.000	ug/kg	C U	35.000	ug/kg	C U
Aroclor-1248	36.000	ug/kg	C U	37.000	ug/kg	C U	35.000	ug/kg	C U
Aroclor-1254	36.000	ug/kg	C U	43.000	ug/kg	C -	35.000	ug/kg	C U
Aroclor-1260	36.000	ug/kg	C U	37.000	ug/kg	C U	35.000	ug/kg	C U
Dieldrin	3.600	ug/kg	C U	3.700	ug/kg	C U	3.500	ug/kg	C U
Endosulfan II	3.600	ug/kg	C U	3.700	ug/kg	C U	3.500	ug/kg	C U
Endosulfan sulfate	3.600	ug/kg	C U	3.700	ug/kg	C U	3.500	ug/kg	C U
Endosulfan-I	1.800	ug/kg	C U	1.900	ug/kg	C U	1.800	ug/kg	C U
Endrin	3.600	ug/kg	C U	3.700	ug/kg	C U	3.500	ug/kg	C U
Endrin aldehyde	3.600	ug/kg	C U	3.700	ug/kg	C U	3.500	ug/kg	C U
Endrin ketone	3.600	ug/kg	C U	3.700	ug/kg	C U	3.500	ug/kg	C U
Heptachlor	1.800	ug/kg	C U	1.900	ug/kg	C U	1.800	ug/kg	C U
Heptachlor epoxide	1.800	ug/kg	C U	1.900	ug/kg	C U	1.800	ug/kg	C U
Methoxychlor	18.000	ug/kg	C U	19.000	ug/kg	C U	18.000	ug/kg	C U
Toxaphene	180.000	ug/kg	C U	190.000	ug/kg	C U	180.000	ug/kg	C U
alpha-BHC	1.800	ug/kg	C U	1.900	ug/kg	C U	1.800	ug/kg	C U
alpha-Chlordane	1.800	ug/kg	C U	1.900	ug/kg	C U	1.800	ug/kg	C U
beta-BHC	1.800	ug/kg	C U	1.900	ug/kg	C U	1.800	ug/kg	C U
delta-BHC	1.800	ug/kg	C U	1.900	ug/kg	C U	1.800	ug/kg	C U
gamma-BHC (Lindane)	1.800	ug/kg	C U	1.900	ug/kg	C U	1.800	ug/kg	C U
gamma-Chlordane	1.800	ug/kg	C U	1.900	ug/kg	C U	1.800	ug/kg	C U

TABLE F-6A
(Continued)

PHASE II - CHEMICAL PARAMETERS

BORING NUMBER	1966			1966			1966		
SAMPLE NUMBER	110405			112859			112883		
	0.5-1			4.5-6.5			24-25		
SAMPLING DATE	03/24/93			04/21/93			04/22/93		
CHEMICAL PARAMETERS	RESULTS	UNITS	L VQ	RESULTS	UNITS	L VQ	RESULTS	UNITS	L VQ
Inorganics									
Aluminum	9880.000	mg/kg	C J	17100.000	mg/kg	C -	14700.000	mg/kg	C -
Antimony	1.200	mg/kg	C UJ	1.100	mg/kg	C UJ	1.100	mg/kg	C UJ
Arsenic	7.000	mg/kg	C J	5.300	mg/kg	C -	6.900	mg/kg	C -
Barium	76.300	mg/kg	C -	153.000	mg/kg	C -	92.900	mg/kg	C -
Beryllium	0.590	mg/kg	C -	0.740	mg/kg	C -	0.730	mg/kg	C -
Cadmium	1.200	mg/kg	C U	1.100	mg/kg	C U	1.100	mg/kg	C U
Calcium	35200.000	mg/kg	C J	18200.000	mg/kg	C -	5050.000	mg/kg	C -
Chromium	12.100	mg/kg	C -	20.300	mg/kg	C -	19.900	mg/kg	C -
Cobalt	6.900	mg/kg	C -	14.200	mg/kg	C -	11.600	mg/kg	C -
Copper	18.600	mg/kg	C -	23.900	mg/kg	C -	24.400	mg/kg	C -
Cyanide	0.140	mg/kg	C -	0.120	mg/kg	C U	0.120	mg/kg	C U
Iron	18900.000	mg/kg	C J	33300.000	mg/kg	C -	32900.000	mg/kg	C -
Lead	17.600	mg/kg	C -	16.000	mg/kg	C -	13.100	mg/kg	C J
Magnesium	12500.000	mg/kg	C -	7320.000	mg/kg	C -	4860.000	mg/kg	C -
Manganese	489.000	mg/kg	C J	576.000	mg/kg	C -	984.000	mg/kg	C -
Mercury	0.120	mg/kg	C U	0.110	mg/kg	C U	0.110	mg/kg	C U
Molybdenum	6.300	mg/kg	C J	8.900	mg/kg	C -	8.600	mg/kg	C -
Nickel	16.700	mg/kg	C -	28.000	mg/kg	C -	36.700	mg/kg	C -
Potassium	1300.000	mg/kg	C -	1880.000	mg/kg	C -	1410.000	mg/kg	C -
Selenium	0.480	mg/kg	C U	0.490	mg/kg	C U	0.490	mg/kg	C UJ
Silicon	781.000	mg/kg	C J	562.000	mg/kg	C -	484.000	mg/kg	C J
Silver	5.300	mg/kg	C -	9.500	mg/kg	C -	9.700	mg/kg	C -
Sodium	91.100	mg/kg	C -	136.000	mg/kg	C -	72.400	mg/kg	C -
Thallium	0.480	mg/kg	C U	0.490	mg/kg	C U	0.490	mg/kg	C U
Vanadium	25.600	mg/kg	C -	44.700	mg/kg	C -	36.400	mg/kg	C -
Zinc	47.500	mg/kg	C J	71.800	mg/kg	C -	88.600	mg/kg	C -
Volatile Organics									
1,1,1-Trichloroethane	13.000	ug/kg	C U	12.000	ug/kg	C U	12.000	ug/kg	C U
1,1,2,2-Tetrachloroethane	13.000	ug/kg	C U	12.000	ug/kg	C U	12.000	ug/kg	C U
1,1,2-Trichloroethane	13.000	ug/kg	C U	12.000	ug/kg	C U	12.000	ug/kg	C U
1,1-Dichloroethane	13.000	ug/kg	C U	12.000	ug/kg	C U	12.000	ug/kg	C U
1,1-Dichloroethene	13.000	ug/kg	C U	12.000	ug/kg	C U	12.000	ug/kg	C U
1,2-Dichloroethane	13.000	ug/kg	C U	12.000	ug/kg	C U	12.000	ug/kg	C U
1,2-Dichloroethene	13.000	ug/kg	C U	12.000	ug/kg	C U	12.000	ug/kg	C U
1,2-Dichloropropane	13.000	ug/kg	C U	12.000	ug/kg	C U	12.000	ug/kg	C U
2-Butanone	13.000	ug/kg	C U	12.000	ug/kg	C UJ	12.000	ug/kg	C UJ
2-Hexanone	13.000	ug/kg	C UJ	12.000	ug/kg	C UJ	12.000	ug/kg	C UJ
4-Methyl-2-pentanone	13.000	ug/kg	C UJ	12.000	ug/kg	C UJ	12.000	ug/kg	C UJ
Acetone	13.000	ug/kg	C U	12.000	ug/kg	C U	12.000	ug/kg	C U
Benzene	13.000	ug/kg	C U	12.000	ug/kg	C U	12.000	ug/kg	C U

07067

R 5174

TABLE F-6A
(Continued)

PHASE II - CHEMICAL PARAMETERS

BORING NUMBER	1966			1966			1966		
SAMPLE NUMBER	110405			112859			112883		
	0.5-1			4.5-6.5			24-25		
SAMPLING DATE	03/24/93			04/21/93			04/22/93		
CHEMICAL PARAMETERS	RESULTS	UNITS	L VQ	RESULTS	UNITS	L VQ	RESULTS	UNITS	L VQ
Volatile Organics									
Bromodichloromethane	13.000	ug/kg	C U	12.000	ug/kg	C U	12.000	ug/kg	C U
Bromoform	13.000	ug/kg	C U	12.000	ug/kg	C U	12.000	ug/kg	C U
Bromomethane	13.000	ug/kg	C U	12.000	ug/kg	C UJ	12.000	ug/kg	C UJ
Carbon Tetrachloride	13.000	ug/kg	C U	12.000	ug/kg	C U	12.000	ug/kg	C U
Carbon disulfide	13.000	ug/kg	C U	12.000	ug/kg	C U	12.000	ug/kg	C U
Chlorobenzene	13.000	ug/kg	C U	12.000	ug/kg	C U	12.000	ug/kg	C U
Chloroethane	13.000	ug/kg	C U	12.000	ug/kg	C UJ	12.000	ug/kg	C UJ
Chloroform	13.000	ug/kg	C U	12.000	ug/kg	C U	12.000	ug/kg	C U
Chloromethane	13.000	ug/kg	C U	12.000	ug/kg	C UJ	12.000	ug/kg	C UJ
Dibromochloromethane	13.000	ug/kg	C U	12.000	ug/kg	C U	12.000	ug/kg	C U
Ethylbenzene	13.000	ug/kg	C U	12.000	ug/kg	C U	12.000	ug/kg	C U
Methylene chloride	13.000	ug/kg	C U	12.000	ug/kg	C U	12.000	ug/kg	C U
Styrene	13.000	ug/kg	C U	12.000	ug/kg	C U	12.000	ug/kg	C U
Tetrachloroethene	13.000	ug/kg	C U	12.000	ug/kg	C U	12.000	ug/kg	C U
Toluene	13.000	ug/kg	C U	11.000	ug/kg	C J	12.000	ug/kg	C U
Trichloroethene	13.000	ug/kg	C U	12.000	ug/kg	C U	12.000	ug/kg	C U
Vinyl Acetate	13.000	ug/kg	C U	12.000	ug/kg	C UJ	12.000	ug/kg	C UJ
Vinyl chloride	13.000	ug/kg	C UJ	12.000	ug/kg	C U	12.000	ug/kg	C U
Xylenes, Total	13.000	ug/kg	C U	12.000	ug/kg	C U	12.000	ug/kg	C U
cis-1,3-Dichloropropene	13.000	ug/kg	C U	12.000	ug/kg	C U	12.000	ug/kg	C U
trans-1,3-Dichloropropene	13.000	ug/kg	C U	12.000	ug/kg	C U	12.000	ug/kg	C U
Semivolatile Organics									
1,2,4-Trichlorobenzene	430.000	ug/kg	C U	420.000	ug/kg	C U	410.000	ug/kg	C U
1,2-Dichlorobenzene	430.000	ug/kg	C U	420.000	ug/kg	C U	410.000	ug/kg	C U
1,2-Diphenylhydrazine	430.000	ug/kg	C UJ	NA			NA		
1,3-Dichlorobenzene	430.000	ug/kg	C U	420.000	ug/kg	C U	410.000	ug/kg	C U
1,4-Dichlorobenzene	430.000	ug/kg	C U	420.000	ug/kg	C U	410.000	ug/kg	C U
2,4,5-Trichlorophenol	2100.000	ug/kg	C U	1000.000	ug/kg	C U	990.000	ug/kg	C U
2,4,6-Trichlorophenol	430.000	ug/kg	C U	420.000	ug/kg	C U	410.000	ug/kg	C U
2,4-Dichlorophenol	430.000	ug/kg	C U	420.000	ug/kg	C U	410.000	ug/kg	C U
2,4-Dimethylphenol	430.000	ug/kg	C U	420.000	ug/kg	C U	410.000	ug/kg	C U
2,4-Dinitrophenol	2100.000	ug/kg	C UJ	2000.000	ug/kg	C R	2000.000	ug/kg	C R
2,4-Dinitrotoluene	430.000	ug/kg	C U	420.000	ug/kg	C UJ	410.000	ug/kg	C UJ
2,6-Dinitrotoluene	430.000	ug/kg	C U	420.000	ug/kg	C U	410.000	ug/kg	C U
2-Benzyl-4-chlorophenol	NA			420.000	ug/kg	C U	410.000	ug/kg	C U
2-Chloronaphthalene	430.000	ug/kg	C U	420.000	ug/kg	C U	410.000	ug/kg	C U
2-Chlorophenol	430.000	ug/kg	C U	420.000	ug/kg	C U	410.000	ug/kg	C U
2-Methylnaphthalene	91.000	ug/kg	C J	420.000	ug/kg	C U	410.000	ug/kg	C U
2-Methylphenol	430.000	ug/kg	C U	420.000	ug/kg	C U	410.000	ug/kg	C U
2-Nitroaniline	2100.000	ug/kg	C UJ	1000.000	ug/kg	C U	990.000	ug/kg	C U

TABLE F-6A
(Continued)

PHASE II - CHEMICAL PARAMETERS

BORING NUMBER	1966			1966			1966		
SAMPLE NUMBER	110405			112859			112883		
	0.5-1			4.5-6.5			24-25		
SAMPLING DATE	03/24/93			04/21/93			04/22/93		
CHEMICAL PARAMETERS	RESULTS	UNITS	L VQ	RESULTS	UNITS	L VQ	RESULTS	UNITS	L VQ
Semivolatile Organics									
2-Nitrophenol	430.000	ug/kg	C UJ	420.000	ug/kg	C U	410.000	ug/kg	C U
3,3'-Dichlorobenzidine	430.000	ug/kg	C U	420.000	ug/kg	C U	410.000	ug/kg	C U
3-Nitroaniline	2100.000	ug/kg	C U	1000.000	ug/kg	C U	990.000	ug/kg	C U
4,6-Dinitro-2-methylphenol	2100.000	ug/kg	C R	1000.000	ug/kg	C R	990.000	ug/kg	C R
4-Bromophenyl phenyl ether	430.000	ug/kg	C U	420.000	ug/kg	C U	410.000	ug/kg	C U
4-Chloro-3-methylphenol	430.000	ug/kg	C U	420.000	ug/kg	C U	410.000	ug/kg	C U
4-Chlorophenylphenyl ether	430.000	ug/kg	C U	420.000	ug/kg	C U	410.000	ug/kg	C U
4-Methylphenol	430.000	ug/kg	C U	420.000	ug/kg	C U	410.000	ug/kg	C U
4-Nitroaniline	2100.000	ug/kg	C U	1000.000	ug/kg	C U	990.000	ug/kg	C U
4-Nitrophenol	2100.000	ug/kg	C U	1000.000	ug/kg	C UJ	990.000	ug/kg	C UJ
Acenaphthene	430.000	ug/kg	C U	420.000	ug/kg	C U	410.000	ug/kg	C U
Acenaphthylene	430.000	ug/kg	C U	420.000	ug/kg	C U	410.000	ug/kg	C U
Anthracene	430.000	ug/kg	C U	420.000	ug/kg	C U	410.000	ug/kg	C U
Benzo(a)anthracene	430.000	ug/kg	C U	420.000	ug/kg	C U	410.000	ug/kg	C U
Benzo(a)pyrene	430.000	ug/kg	C R	420.000	ug/kg	C U	410.000	ug/kg	C U
Benzo(b)fluoranthene	430.000	ug/kg	C R	420.000	ug/kg	C U	410.000	ug/kg	C U
Benzo(g,h,i)perylene	430.000	ug/kg	C R	420.000	ug/kg	C U	410.000	ug/kg	C U
Benzo(k)fluoranthene	430.000	ug/kg	C R	420.000	ug/kg	C U	410.000	ug/kg	C U
Benzoic acid	2100.000	ug/kg	C UJ	2000.000	ug/kg	C R	2000.000	ug/kg	C R
Benzyl alcohol	430.000	ug/kg	C UJ	420.000	ug/kg	C UJ	410.000	ug/kg	C UJ
Butyl benzyl phthalate	430.000	ug/kg	C U	420.000	ug/kg	C U	410.000	ug/kg	C U
Carbazole	430.000	ug/kg	C U	420.000	ug/kg	C U	410.000	ug/kg	C U
Chrysene	53.000	ug/kg	C J	420.000	ug/kg	C U	410.000	ug/kg	C U
Di-n-butyl phthalate	430.000	ug/kg	C U	51.000	ug/kg	C U	410.000	ug/kg	C U
Di-n-octyl phthalate	430.000	ug/kg	C R	420.000	ug/kg	C U	410.000	ug/kg	C U
Dibenzo(a,h)anthracene	430.000	ug/kg	C R	420.000	ug/kg	C U	410.000	ug/kg	C U
Dibenzofuran	430.000	ug/kg	C U	420.000	ug/kg	C U	410.000	ug/kg	C U
Diethyl phthalate	430.000	ug/kg	C U	420.000	ug/kg	C U	410.000	ug/kg	C U
Dimethyl phthalate	430.000	ug/kg	C U	420.000	ug/kg	C U	410.000	ug/kg	C U
Fluoranthene	430.000	ug/kg	C U	420.000	ug/kg	C U	410.000	ug/kg	C U
Fluorene	430.000	ug/kg	C U	420.000	ug/kg	C U	410.000	ug/kg	C U
Hexachlorobenzene	430.000	ug/kg	C U	420.000	ug/kg	C U	410.000	ug/kg	C U
Hexachlorobutadiene	430.000	ug/kg	C U	420.000	ug/kg	C U	410.000	ug/kg	C U
Hexachlorocyclopentadiene	430.000	ug/kg	C U	420.000	ug/kg	C UJ	410.000	ug/kg	C UJ
Hexachloroethane	430.000	ug/kg	C U	420.000	ug/kg	C U	410.000	ug/kg	C U
Indeno(1,2,3-cd)pyrene	430.000	ug/kg	C R	420.000	ug/kg	C U	410.000	ug/kg	C U
Isophorone	430.000	ug/kg	C U	420.000	ug/kg	C U	410.000	ug/kg	C U
N-Nitroso-di-n-propylamine	430.000	ug/kg	C U	420.000	ug/kg	C U	410.000	ug/kg	C U
N-Nitrosodimethylamine	430.000	ug/kg	C U	420.000	ug/kg	C U	410.000	ug/kg	C U
N-Nitrosodiphenylamine	430.000	ug/kg	C U	420.000	ug/kg	C U	410.000	ug/kg	C U
Naphthalene	61.000	ug/kg	C J	420.000	ug/kg	C U	410.000	ug/kg	C U
Nitrobenzene	430.000	ug/kg	C U	420.000	ug/kg	C U	410.000	ug/kg	C U

0709

5174

TABLE F-6A
(Continued)

PHASE II - CHEMICAL PARAMETERS

BORING NUMBER	1966			1966			1966		
SAMPLE NUMBER	110405			112859			112883		
	0.5-1			4.5-6.5			24-25		
SAMPLING DATE	03/24/93			04/21/93			04/22/93		
CHEMICAL PARAMETERS	RESULTS	UNITS	L VQ	RESULTS	UNITS	L VQ	RESULTS	UNITS	L VQ
Semivolatile Organics									
Pentachlorophenol	2100.000	ug/kg	C U	1000.000	ug/kg	C U	990.000	ug/kg	C U
Phenanthrene	85.000	ug/kg	C J	420.000	ug/kg	C U	410.000	ug/kg	C U
Phenol	430.000	ug/kg	C U	420.000	ug/kg	C U	410.000	ug/kg	C U
Pyrene	44.000	ug/kg	C J	420.000	ug/kg	C U	410.000	ug/kg	C U
Tributyl phosphate	430.000	ug/kg	C U	420.000	ug/kg	C U	410.000	ug/kg	C U
bis(2-Chloroethoxy)methane	430.000	ug/kg	C U	420.000	ug/kg	C U	410.000	ug/kg	C U
bis(2-Chloroethyl)ether	430.000	ug/kg	C U	420.000	ug/kg	C U	410.000	ug/kg	C U
bis(2-Chloroisopropyl) ether	430.000	ug/kg	C U	420.000	ug/kg	C U	410.000	ug/kg	C U
bis(2-Ethylhexyl) phthalate	49.000	ug/kg	C R	420.000	ug/kg	C U	410.000	ug/kg	C U
p-Chloroaniline	430.000	ug/kg	C U	420.000	ug/kg	C U	410.000	ug/kg	C U
Pesticide Organics/PCBs									
4,4'-DDD	4.300	ug/kg	C U	4.200	ug/kg	C U	4.200	ug/kg	C U
4,4'-DDE	4.300	ug/kg	C U	4.200	ug/kg	C U	4.200	ug/kg	C U
4,4'-DDT	4.300	ug/kg	C U	4.200	ug/kg	C U	4.200	ug/kg	C U
Aldrin	2.200	ug/kg	C U	2.100	ug/kg	C U	2.100	ug/kg	C U
Aroclor-1016	43.000	ug/kg	C U	42.000	ug/kg	C U	42.000	ug/kg	C U
Aroclor-1221	87.000	ug/kg	C U	85.000	ug/kg	C U	84.000	ug/kg	C U
Aroclor-1232	43.000	ug/kg	C U	42.000	ug/kg	C U	42.000	ug/kg	C U
Aroclor-1242	43.000	ug/kg	C U	42.000	ug/kg	C U	42.000	ug/kg	C U
Aroclor-1248	43.000	ug/kg	C U	42.000	ug/kg	C U	42.000	ug/kg	C U
Aroclor-1254	43.000	ug/kg	C U	42.000	ug/kg	C U	42.000	ug/kg	C U
Aroclor-1260	43.000	ug/kg	C U	42.000	ug/kg	C U	42.000	ug/kg	C U
Dieldrin	4.300	ug/kg	C U	4.200	ug/kg	C U	4.200	ug/kg	C U
Endosulfan II	4.300	ug/kg	C U	4.200	ug/kg	C U	4.200	ug/kg	C U
Endosulfan sulfate	4.300	ug/kg	C U	4.200	ug/kg	C U	4.200	ug/kg	C U
Endosulfan-I	2.200	ug/kg	C U	2.100	ug/kg	C U	2.100	ug/kg	C U
Endrin	4.300	ug/kg	C U	4.200	ug/kg	C U	4.200	ug/kg	C U
Endrin aldehyde	4.300	ug/kg	C U	4.200	ug/kg	C U	4.200	ug/kg	C U
Endrin ketone	4.300	ug/kg	C U	4.200	ug/kg	C U	4.200	ug/kg	C U
Heptachlor	2.200	ug/kg	C U	2.100	ug/kg	C U	2.100	ug/kg	C U
Heptachlor epoxide	2.200	ug/kg	C U	2.100	ug/kg	C U	2.100	ug/kg	C U
Methoxychlor	22.000	ug/kg	C U	21.000	ug/kg	C U	21.000	ug/kg	C U
Toxaphene	220.000	ug/kg	C U	210.000	ug/kg	C U	210.000	ug/kg	C U
alpha-BHC	2.200	ug/kg	C U	2.100	ug/kg	C U	2.100	ug/kg	C U
alpha-Chlordane	2.200	ug/kg	C U	2.100	ug/kg	C U	2.100	ug/kg	C U
beta-BHC	2.200	ug/kg	C U	2.100	ug/kg	C U	2.100	ug/kg	C U
delta-BHC	2.200	ug/kg	C U	2.100	ug/kg	C U	2.100	ug/kg	C U
gamma-BHC (Lindane)	2.200	ug/kg	C U	2.100	ug/kg	C U	2.100	ug/kg	C U
gamma-Chlordane	2.200	ug/kg	C U	2.100	ug/kg	C U	2.100	ug/kg	C U

TABLE F-6A
(Continued)

PHASE II - CHEMICAL PARAMETERS

BORING NUMBER	1967			1967			1967		
SAMPLE NUMBER	110362			112696			112731		
	0.5-1			4.5-7.5			29.5-31		
SAMPLING DATE	03/22/93			04/18/93			04/19/93		
CHEMICAL PARAMETERS	RESULTS	UNITS	L VQ	RESULTS	UNITS	L VQ	RESULTS	UNITS	L VQ
Inorganics									
Aluminum	8250.000	mg/kg	C -	11300.000	mg/kg	C -	11600.000	mg/kg	C -
Antimony	0.880	mg/kg	C R	0.900	mg/kg	C UJ	1.100	mg/kg	C UJ
Arsenic	7.600	mg/kg	C -	6.800	mg/kg	C -	2.500	mg/kg	C -
Barium	58.100	mg/kg	C -	81.100	mg/kg	C -	53.400	mg/kg	C -
Beryllium	0.590	mg/kg	C -	0.510	mg/kg	C -	0.490	mg/kg	C -
Cadmium	0.880	mg/kg	C U	0.900	mg/kg	C U	1.100	mg/kg	C U
Calcium	91100.000	mg/kg	C -	98200.000	mg/kg	C -	3010.000	mg/kg	C -
Chromium	10.400	mg/kg	C -	12.600	mg/kg	C -	12.700	mg/kg	C -
Cobalt	7.700	mg/kg	C -	7.200	mg/kg	C -	8.300	mg/kg	C -
Copper	13.900	mg/kg	C -	15.100	mg/kg	C -	14.800	mg/kg	C -
Cyanide	0.120	mg/kg	C U	0.120	mg/kg	C U	0.120	mg/kg	C U
Iron	17300.000	mg/kg	C -	20400.000	mg/kg	C -	19100.000	mg/kg	C -
Lead	8.000	mg/kg	C J	11.900	mg/kg	C -	11.800	mg/kg	C -
Magnesium	26200.000	mg/kg	C J	27400.000	mg/kg	C -	2780.000	mg/kg	C -
Manganese	553.000	mg/kg	C -	597.000	mg/kg	C -	570.000	mg/kg	C -
Mercury	0.120	mg/kg	C U	0.110	mg/kg	C U	0.100	mg/kg	C U
Molybdenum	5.300	mg/kg	C -	6.000	mg/kg	C -	5.400	mg/kg	C -
Nickel	16.200	mg/kg	C -	16.600	mg/kg	C -	13.900	mg/kg	C -
Potassium	1370.000	mg/kg	C -	1630.000	mg/kg	C -	1290.000	mg/kg	C -
Selenium	0.370	mg/kg	C UJ	0.450	mg/kg	C U	0.480	mg/kg	C U
Silicon	356.000	mg/kg	C J	840.000	mg/kg	C -	749.000	mg/kg	C -
Silver	5.200	mg/kg	C -	5.000	mg/kg	C -	5.600	mg/kg	C -
Sodium	126.000	mg/kg	C -	154.000	mg/kg	C -	66.700	mg/kg	C -
Thallium	0.370	mg/kg	C U	0.450	mg/kg	C U	0.480	mg/kg	C U
Vanadium	21.800	mg/kg	C -	27.000	mg/kg	C -	26.700	mg/kg	C -
Zinc	41.000	mg/kg	C -	47.400	mg/kg	C -	50.300	mg/kg	C -
Volatile Organics									
1,1,1-Trichloroethane	6.000	ug/kg	C U	12.000	ug/kg	C U	12.000	ug/kg	C U
1,1,2,2-Tetrachloroethane	6.000	ug/kg	C U	12.000	ug/kg	C U	12.000	ug/kg	C U
1,1,2-Trichloroethane	6.000	ug/kg	C U	12.000	ug/kg	C U	12.000	ug/kg	C U
1,1-Dichloroethane	6.000	ug/kg	C UJ	12.000	ug/kg	C U	12.000	ug/kg	C U
1,1-Dichloroethene	6.000	ug/kg	C U	12.000	ug/kg	C U	12.000	ug/kg	C U
1,2-Dichloroethane	6.000	ug/kg	C U	12.000	ug/kg	C U	12.000	ug/kg	C U
1,2-Dichloroethene	6.000	ug/kg	C U	12.000	ug/kg	C U	12.000	ug/kg	C U
1,2-Dichloropropane	6.000	ug/kg	C U	12.000	ug/kg	C U	12.000	ug/kg	C U
2-Butanone	12.000	ug/kg	C UJ	12.000	ug/kg	C U	12.000	ug/kg	C UJ
2-Hexanone	12.000	ug/kg	C U	12.000	ug/kg	C UJ	12.000	ug/kg	C UJ
4-Methyl-2-pentanone	12.000	ug/kg	C U	12.000	ug/kg	C U	12.000	ug/kg	C UJ
Acetone	12.000	ug/kg	C U	12.000	ug/kg	C UJ	12.000	ug/kg	C U
Benzene	6.000	ug/kg	C U	12.000	ug/kg	C U	12.000	ug/kg	C U

TABLE F-6A
(Continued)

PHASE II - CHEMICAL PARAMETERS

BORING NUMBER	1967			1967			1967		
SAMPLE NUMBER	110362			112696			112731		
	0.5-1			4.5-7.5			29.5-31		
SAMPLING DATE	03/22/93			04/18/93			04/19/93		
CHEMICAL PARAMETERS	RESULTS	UNITS	L VQ	RESULTS	UNITS	L VQ	RESULTS	UNITS	L VQ
Volatile Organics									
Bromodichloromethane	6.000	ug/kg	C U	12.000	ug/kg	C U	12.000	ug/kg	C U
Bromoform	6.000	ug/kg	C U	12.000	ug/kg	C U	12.000	ug/kg	C U
Bromomethane	12.000	ug/kg	C UJ	12.000	ug/kg	C UJ	12.000	ug/kg	C UJ
Carbon Tetrachloride	6.000	ug/kg	C U	12.000	ug/kg	C U	12.000	ug/kg	C U
Carbon disulfide	6.000	ug/kg	C U	12.000	ug/kg	C U	12.000	ug/kg	C UJ
Chlorobenzene	6.000	ug/kg	C U	12.000	ug/kg	C U	12.000	ug/kg	C U
Chloroethane	12.000	ug/kg	C UJ	12.000	ug/kg	C U	12.000	ug/kg	C UJ
Chloroform	6.000	ug/kg	C U	12.000	ug/kg	C U	12.000	ug/kg	C U
Chloromethane	12.000	ug/kg	C U	12.000	ug/kg	C U	12.000	ug/kg	C UJ
Dibromochloromethane	6.000	ug/kg	C U	12.000	ug/kg	C U	12.000	ug/kg	C U
Ethylbenzene	6.000	ug/kg	C U	12.000	ug/kg	C U	12.000	ug/kg	C U
Methylene chloride	12.000	ug/kg	C UJ	17.000	ug/kg	C U	12.000	ug/kg	C U
Styrene	6.000	ug/kg	C U	12.000	ug/kg	C U	12.000	ug/kg	C U
Tetrachloroethene	6.000	ug/kg	C U	12.000	ug/kg	C U	12.000	ug/kg	C U
Toluene	6.000	ug/kg	C U	39.000	ug/kg	C -	2.000	ug/kg	C J
Trichloroethene	6.000	ug/kg	C U	12.000	ug/kg	C U	12.000	ug/kg	C U
Vinyl Acetate	12.000	ug/kg	C U	12.000	ug/kg	C UJ	12.000	ug/kg	C UJ
Vinyl chloride	12.000	ug/kg	C U	12.000	ug/kg	C U	12.000	ug/kg	C U
Xylenes, Total	6.000	ug/kg	C U	12.000	ug/kg	C U	12.000	ug/kg	C U
cis-1,3-Dichloropropene	6.000	ug/kg	C U	12.000	ug/kg	C U	12.000	ug/kg	C U
trans-1,3-Dichloropropene	6.000	ug/kg	C U	12.000	ug/kg	C U	12.000	ug/kg	C U
Semivolatile Organics									
1,2,4-Trichlorobenzene	410.000	ug/kg	C U	390.000	ug/kg	C U	400.000	ug/kg	C U
1,2-Dichlorobenzene	410.000	ug/kg	C U	390.000	ug/kg	C U	400.000	ug/kg	C U
1,2-Diphenylhydrazine	410.000	ug/kg	C U	NA			NA		
1,3-Dichlorobenzene	410.000	ug/kg	C U	390.000	ug/kg	C U	400.000	ug/kg	C U
1,4-Dichlorobenzene	410.000	ug/kg	C U	390.000	ug/kg	C U	400.000	ug/kg	C U
2,4,5-Trichlorophenol	1000.000	ug/kg	C U	1900.000	ug/kg	C U	960.000	ug/kg	C U
2,4,6-Trichlorophenol	410.000	ug/kg	C U	390.000	ug/kg	C U	400.000	ug/kg	C U
2,4-Dichlorophenol	410.000	ug/kg	C U	390.000	ug/kg	C U	400.000	ug/kg	C U
2,4-Dimethylphenol	410.000	ug/kg	C U	390.000	ug/kg	C U	400.000	ug/kg	C U
2,4-Dinitrophenol	2000.000	ug/kg	C UJ	1900.000	ug/kg	C UJ	1900.000	ug/kg	C UJ
2,4-Dinitrotoluene	410.000	ug/kg	C UJ	390.000	ug/kg	C U	400.000	ug/kg	C U
2,6-Dinitrotoluene	410.000	ug/kg	C U	390.000	ug/kg	C U	400.000	ug/kg	C U
2-Chloronaphthalene	410.000	ug/kg	C U	390.000	ug/kg	C U	400.000	ug/kg	C U
2-Chlorophenol	410.000	ug/kg	C U	390.000	ug/kg	C U	400.000	ug/kg	C U
2-Methylnaphthalene	410.000	ug/kg	C U	390.000	ug/kg	C U	400.000	ug/kg	C U
2-Methylphenol	410.000	ug/kg	C U	390.000	ug/kg	C U	400.000	ug/kg	C U
2-Nitroaniline	1000.000	ug/kg	C U	1900.000	ug/kg	C U	960.000	ug/kg	C U
2-Nitrophenol	410.000	ug/kg	C U	390.000	ug/kg	C U	400.000	ug/kg	C U

TABLE F-6A
(Continued)

PHASE II - CHEMICAL PARAMETERS

BORING NUMBER	1967			1967			1967		
SAMPLE NUMBER	110362			112696			112731		
	0.5-1			4.5-7.5			29.5-31		
SAMPLING DATE	03/22/93			04/18/93			04/19/93		
CHEMICAL PARAMETERS	RESULTS	UNITS	L VQ	RESULTS	UNITS	L VQ	RESULTS	UNITS	L VQ
Semivolatile Organics									
3,3'-Dichlorobenzidine	410.000	ug/kg	C U	390.000	ug/kg	C U	400.000	ug/kg	C U
3-Nitroaniline	1000.000	ug/kg	C U	1900.000	ug/kg	C U	960.000	ug/kg	C U
4,6-Dinitro-2-methylphenol	1000.000	ug/kg	C UJ	1900.000	ug/kg	C UJ	960.000	ug/kg	C U
4-Bromophenyl phenyl ether	410.000	ug/kg	C U	390.000	ug/kg	C U	400.000	ug/kg	C U
4-Chloro-3-methylphenol	410.000	ug/kg	C U	390.000	ug/kg	C U	400.000	ug/kg	C U
4-Chlorophenylphenyl ether	410.000	ug/kg	C UJ	390.000	ug/kg	C U	400.000	ug/kg	C U
4-Methylphenol	410.000	ug/kg	C U	390.000	ug/kg	C U	400.000	ug/kg	C U
4-Nitroaniline	1000.000	ug/kg	C UJ	1900.000	ug/kg	C U	960.000	ug/kg	C U
4-Nitrophenol	1000.000	ug/kg	C UJ	1900.000	ug/kg	C UJ	960.000	ug/kg	C UJ
Acenaphthene	410.000	ug/kg	C U	390.000	ug/kg	C U	400.000	ug/kg	C U
Acenaphthylene	410.000	ug/kg	C U	390.000	ug/kg	C U	400.000	ug/kg	C U
Anthracene	410.000	ug/kg	C U	390.000	ug/kg	C U	400.000	ug/kg	C U
Benzo(a)anthracene	410.000	ug/kg	C U	390.000	ug/kg	C U	400.000	ug/kg	C U
Benzo(a)pyrene	410.000	ug/kg	C U	390.000	ug/kg	C U	400.000	ug/kg	C U
Benzo(b)fluoranthene	410.000	ug/kg	C U	390.000	ug/kg	C U	400.000	ug/kg	C U
Benzo(g,h,i)perylene	410.000	ug/kg	C U	390.000	ug/kg	C U	400.000	ug/kg	C U
Benzo(k)fluoranthene	410.000	ug/kg	C U	390.000	ug/kg	C U	400.000	ug/kg	C U
Benzoic acid	45.000	ug/kg	C J	1900.000	ug/kg	C UJ	44.000	ug/kg	C J
Benzyl alcohol	410.000	ug/kg	C U	390.000	ug/kg	C U	400.000	ug/kg	C U
Butyl benzyl phthalate	410.000	ug/kg	C U	390.000	ug/kg	C U	400.000	ug/kg	C U
Carbazole	410.000	ug/kg	C U	390.000	ug/kg	C U	400.000	ug/kg	C U
Chrysene	410.000	ug/kg	C U	390.000	ug/kg	C U	400.000	ug/kg	C U
Di-n-butyl phthalate	410.000	ug/kg	C U	390.000	ug/kg	C U	400.000	ug/kg	C U
Di-n-octyl phthalate	410.000	ug/kg	C U	390.000	ug/kg	C UJ	400.000	ug/kg	C UJ
Dibenzo(a,h)anthracene	410.000	ug/kg	C U	390.000	ug/kg	C U	400.000	ug/kg	C U
Dibenzofuran	410.000	ug/kg	C UJ	390.000	ug/kg	C U	400.000	ug/kg	C U
Diethyl phthalate	410.000	ug/kg	C UJ	390.000	ug/kg	C U	400.000	ug/kg	C U
Dimethyl phthalate	410.000	ug/kg	C U	390.000	ug/kg	C U	400.000	ug/kg	C U
Fluoranthene	410.000	ug/kg	C U	390.000	ug/kg	C U	400.000	ug/kg	C U
Fluorene	410.000	ug/kg	C UJ	390.000	ug/kg	C U	400.000	ug/kg	C U
Hexachlorobenzene	410.000	ug/kg	C U	390.000	ug/kg	C U	400.000	ug/kg	C U
Hexachlorobutadiene	410.000	ug/kg	C U	390.000	ug/kg	C U	400.000	ug/kg	C U
Hexachlorocyclopentadiene	410.000	ug/kg	C U	390.000	ug/kg	C U	400.000	ug/kg	C UJ
Hexachloroethane	410.000	ug/kg	C U	390.000	ug/kg	C U	400.000	ug/kg	C U
Indeno(1,2,3-cd)pyrene	410.000	ug/kg	C U	390.000	ug/kg	C U	400.000	ug/kg	C U
Isophorone	410.000	ug/kg	C U	390.000	ug/kg	C U	400.000	ug/kg	C U
N-Nitroso-di-n-propylamine	410.000	ug/kg	C U	390.000	ug/kg	C U	400.000	ug/kg	C U
N-Nitrosodimethylamine	410.000	ug/kg	C U	NA			NA		
N-Nitrosodiphenylamine	410.000	ug/kg	C U	390.000	ug/kg	C U	400.000	ug/kg	C U
Naphthalene	410.000	ug/kg	C U	390.000	ug/kg	C U	400.000	ug/kg	C U
Nitrobenzene	410.000	ug/kg	C U	390.000	ug/kg	C U	400.000	ug/kg	C U
Pentachlorophenol	1000.000	ug/kg	C U	1900.000	ug/kg	C U	960.000	ug/kg	C U

0713

5174

TABLE F-6A
(Continued)

PHASE II - CHEMICAL PARAMETERS

BORING NUMBER	1967			1967			1967		
SAMPLE NUMBER	110362			112696			112731		
	0.5-1			4.5-7.5			29.5-31		
SAMPLING DATE	03/22/93			04/18/93			04/19/93		
CHEMICAL PARAMETERS	RESULTS	UNITS	L VQ	RESULTS	UNITS	L VQ	RESULTS	UNITS	L VQ
Semivolatile Organics									
Phenanthrene	410.000	ug/kg	C U	390.000	ug/kg	C U	400.000	ug/kg	C U
Phenol	410.000	ug/kg	C U	390.000	ug/kg	C U	400.000	ug/kg	C U
Pyrene	410.000	ug/kg	C U	390.000	ug/kg	C U	400.000	ug/kg	C U
Tributyl phosphate	410.000	ug/kg	C U	NA			NA		
bis(2-Chloroethoxy)methane	410.000	ug/kg	C U	390.000	ug/kg	C U	400.000	ug/kg	C U
bis(2-Chloroethyl)ether	410.000	ug/kg	C U	390.000	ug/kg	C U	400.000	ug/kg	C U
bis(2-Chloroisopropyl) ether	410.000	ug/kg	C U	390.000	ug/kg	C U	400.000	ug/kg	C UJ
bis(2-Ethylhexyl) phthalate	96.000	ug/kg	C J	49.000	ug/kg	C J	400.000	ug/kg	C U
p-Chloroaniline	410.000	ug/kg	C U	390.000	ug/kg	C U	400.000	ug/kg	C U
Pesticide Organics/PCBs									
4,4'-DDD	4.100	ug/kg	C U	4.000	ug/kg	C U	4.000	ug/kg	C U
4,4'-DDE	4.100	ug/kg	C U	4.000	ug/kg	C U	4.000	ug/kg	C U
4,4'-DDT	4.100	ug/kg	C U	4.000	ug/kg	C U	4.000	ug/kg	C U
Aldrin	2.100	ug/kg	C U	2.000	ug/kg	C U	2.100	ug/kg	C U
Aroclor-1016	41.000	ug/kg	C U	40.000	ug/kg	C U	40.000	ug/kg	C U
Aroclor-1221	84.000	ug/kg	C U	80.000	ug/kg	C U	82.000	ug/kg	C U
Aroclor-1232	41.000	ug/kg	C U	40.000	ug/kg	C U	40.000	ug/kg	C U
Aroclor-1242	41.000	ug/kg	C U	40.000	ug/kg	C U	40.000	ug/kg	C U
Aroclor-1248	41.000	ug/kg	C U	40.000	ug/kg	C U	40.000	ug/kg	C U
Aroclor-1254	41.000	ug/kg	C U	85.000	ug/kg	C -	40.000	ug/kg	C U
Aroclor-1260	41.000	ug/kg	C U	40.000	ug/kg	C U	40.000	ug/kg	C U
Dieldrin	4.100	ug/kg	C U	4.000	ug/kg	C U	4.000	ug/kg	C U
Endosulfan II	4.100	ug/kg	C U	4.000	ug/kg	C U	4.000	ug/kg	C U
Endosulfan sulfate	4.100	ug/kg	C U	4.000	ug/kg	C U	4.000	ug/kg	C U
Endosulfan-I	2.100	ug/kg	C U	2.000	ug/kg	C U	2.100	ug/kg	C U
Endrin	4.100	ug/kg	C U	4.000	ug/kg	C U	4.000	ug/kg	C U
Endrin aldehyde	4.100	ug/kg	C U	4.000	ug/kg	C U	4.000	ug/kg	C U
Endrin ketone	4.100	ug/kg	C U	4.000	ug/kg	C U	4.000	ug/kg	C U
Heptachlor	2.100	ug/kg	C U	2.000	ug/kg	C U	2.100	ug/kg	C U
Heptachlor epoxide	2.100	ug/kg	C U	2.000	ug/kg	C U	2.100	ug/kg	C U
Methoxychlor	21.000	ug/kg	C U	20.000	ug/kg	C U	21.000	ug/kg	C U
Toxaphene	210.000	ug/kg	C U	200.000	ug/kg	C U	210.000	ug/kg	C U
alpha-BHC	2.100	ug/kg	C U	2.000	ug/kg	C U	2.100	ug/kg	C U
alpha-Chlordane	2.100	ug/kg	C U	2.000	ug/kg	C U	2.100	ug/kg	C U
beta-BHC	2.100	ug/kg	C U	2.000	ug/kg	C U	2.100	ug/kg	C U
delta-BHC	2.100	ug/kg	C U	2.000	ug/kg	C U	2.100	ug/kg	C U
gamma-BHC (Lindane)	2.100	ug/kg	C U	2.000	ug/kg	C U	2.100	ug/kg	C U
gamma-Chlordane	2.100	ug/kg	C U	2.000	ug/kg	C U	2.100	ug/kg	C U

TABLE F-6A
(Continued)

PHASE II - CHEMICAL PARAMETERS

BORING NUMBER	1968			1968			1968		
SAMPLE NUMBER	110396			112835			112849		
	0.5-1			4.5-6.5			15.5-16.5		
SAMPLING DATE	03/22/93			04/20/93			04/20/93		
CHEMICAL PARAMETERS	RESULTS	UNITS	L VQ	RESULTS	UNITS	L VQ	RESULTS	UNITS	L VQ
Inorganics									
Aluminum	6390.000	mg/kg	C -	10400.000	mg/kg	C -	13900.000	mg/kg	C -
Antimony	1.100	mg/kg	C R	1.200	mg/kg	C UJ	0.780	mg/kg	C UJ
Arsenic	2.800	mg/kg	C -	3.700	mg/kg	C -	5.100	mg/kg	C J
Barium	63.600	mg/kg	C -	68.500	mg/kg	C -	96.100	mg/kg	C -
Beryllium	0.580	mg/kg	C -	0.470	mg/kg	C U	1.600	mg/kg	C U
Cadmium	1.100	mg/kg	C U	1.200	mg/kg	C U	3.900	mg/kg	C U
Calcium	37400.000	mg/kg	C -	59300.000	mg/kg	C -	187000.000	mg/kg	C -
Chromium	8.500	mg/kg	C -	11.500	mg/kg	C -	16.800	mg/kg	C -
Cobalt	8.800	mg/kg	C -	8.300	mg/kg	C -	9.900	mg/kg	C -
Copper	14.000	mg/kg	C -	15.200	mg/kg	C -	23.500	mg/kg	C -
Cyanide	0.120	mg/kg	C U	0.120	mg/kg	C U	0.110	mg/kg	C U
Iron	13500.000	mg/kg	C -	16900.000	mg/kg	C -	32700.000	mg/kg	C -
Lead	6.200	mg/kg	C J	13.200	mg/kg	C -	8.700	mg/kg	C -
Magnesium	10200.000	mg/kg	C J	19600.000	mg/kg	C -	50800.000	mg/kg	C -
Manganese	659.000	mg/kg	C -	477.000	mg/kg	C -	911.000	mg/kg	C -
Mercury	0.110	mg/kg	C U	0.110	mg/kg	C U	0.100	mg/kg	C U
Molybdenum	4.600	mg/kg	C -	4.700	mg/kg	C U	15.500	mg/kg	C U
Nickel	13.800	mg/kg	C -	16.200	mg/kg	C -	28.100	mg/kg	C -
Potassium	766.000	mg/kg	C -	2480.000	mg/kg	C -	1410.000	mg/kg	C -
Selenium	0.400	mg/kg	C UJ	0.480	mg/kg	C U	0.340	mg/kg	C UJ
Silicon	594.000	mg/kg	C J	679.000	mg/kg	C -	914.000	mg/kg	C -
Silver	4.000	mg/kg	C -	4.400	mg/kg	C -	7.900	mg/kg	C -
Sodium	92.100	mg/kg	C -	118.000	mg/kg	C -	272.000	mg/kg	C -
Thallium	0.400	mg/kg	C U	0.480	mg/kg	C U	0.340	mg/kg	C U
Vanadium	19.200	mg/kg	C -	25.800	mg/kg	C -	34.700	mg/kg	C -
Zinc	34.400	mg/kg	C -	46.300	mg/kg	C -	82.600	mg/kg	C -
Volatile Organics									
1,1,1-Trichloroethane	6.000	ug/kg	C U	12.000	ug/kg	C U	11.000	ug/kg	C U
1,1,2,2-Tetrachloroethane	6.000	ug/kg	C U	12.000	ug/kg	C U	11.000	ug/kg	C U
1,1,2-Trichloroethane	6.000	ug/kg	C U	12.000	ug/kg	C U	11.000	ug/kg	C U
1,1-Dichloroethane	6.000	ug/kg	C UJ	12.000	ug/kg	C U	11.000	ug/kg	C U
1,1-Dichloroethene	6.000	ug/kg	C U	12.000	ug/kg	C U	11.000	ug/kg	C U
1,2-Dichloroethane	6.000	ug/kg	C U	12.000	ug/kg	C U	11.000	ug/kg	C U
1,2-Dichloroethene	6.000	ug/kg	C U	12.000	ug/kg	C U	11.000	ug/kg	C U
1,2-Dichloropropane	6.000	ug/kg	C U	12.000	ug/kg	C U	11.000	ug/kg	C U
2-Butanone	11.000	ug/kg	C UJ	11.000	ug/kg	C J	11.000	ug/kg	C UJ
2-Hexanone	11.000	ug/kg	C U	12.000	ug/kg	C UJ	11.000	ug/kg	C UJ
4-Methyl-2-pentanone	11.000	ug/kg	C U	12.000	ug/kg	C UJ	11.000	ug/kg	C UJ
Acetone	11.000	ug/kg	C U	56.000	ug/kg	C -	3.000	ug/kg	C J
Benzene	6.000	ug/kg	C U	12.000	ug/kg	C U	11.000	ug/kg	C U

TABLE F-6A
(Continued)

PHASE II - CHEMICAL PARAMETERS

BORING NUMBER	1968			1968			1968		
SAMPLE NUMBER	110396			112835			112849		
	0.5-1			4.5-6.5			15.5-16.5		
SAMPLING DATE	03/22/93			04/20/93			04/20/93		
CHEMICAL PARAMETERS	RESULTS	UNITS	L VQ	RESULTS	UNITS	L VQ	RESULTS	UNITS	L VQ
Volatile Organics									
Bromodichloromethane	6.000	ug/kg	C U	12.000	ug/kg	C U	11.000	ug/kg	C U
Bromoform	6.000	ug/kg	C U	12.000	ug/kg	C U	11.000	ug/kg	C U
Bromomethane	11.000	ug/kg	C UJ	12.000	ug/kg	C UJ	11.000	ug/kg	C UJ
Carbon Tetrachloride	6.000	ug/kg	C U	12.000	ug/kg	C U	11.000	ug/kg	C U
Carbon disulfide	6.000	ug/kg	C U	12.000	ug/kg	C UJ	11.000	ug/kg	C UJ
Chlorobenzene	6.000	ug/kg	C U	12.000	ug/kg	C U	11.000	ug/kg	C U
Chloroethane	11.000	ug/kg	C UJ	12.000	ug/kg	C UJ	11.000	ug/kg	C UJ
Chloroform	6.000	ug/kg	C U	12.000	ug/kg	C U	11.000	ug/kg	C U
Chloromethane	11.000	ug/kg	C U	12.000	ug/kg	C UJ	11.000	ug/kg	C UJ
Dibromochloromethane	6.000	ug/kg	C U	12.000	ug/kg	C U	11.000	ug/kg	C U
Ethylbenzene	6.000	ug/kg	C U	12.000	ug/kg	C U	11.000	ug/kg	C U
Methylene chloride	11.000	ug/kg	C UJ	12.000	ug/kg	C U	11.000	ug/kg	C U
Styrene	6.000	ug/kg	C U	12.000	ug/kg	C U	11.000	ug/kg	C U
Tetrachloroethene	6.000	ug/kg	C U	12.000	ug/kg	C U	11.000	ug/kg	C U
Toluene	6.000	ug/kg	C U	4.000	ug/kg	C J	52.000	ug/kg	C -
Trichloroethene	6.000	ug/kg	C U	12.000	ug/kg	C U	11.000	ug/kg	C U
Vinyl Acetate	11.000	ug/kg	C U	12.000	ug/kg	C UJ	11.000	ug/kg	C UJ
Vinyl chloride	11.000	ug/kg	C U	12.000	ug/kg	C U	11.000	ug/kg	C U
Xylenes, Total	6.000	ug/kg	C U	12.000	ug/kg	C U	11.000	ug/kg	C U
cis-1,3-Dichloropropene	6.000	ug/kg	C U	12.000	ug/kg	C U	11.000	ug/kg	C U
trans-1,3-Dichloropropene	6.000	ug/kg	C U	12.000	ug/kg	C U	11.000	ug/kg	C U
Semivolatile Organics									
1,2,4-Trichlorobenzene	400.000	ug/kg	C U	400.000	ug/kg	C U	370.000	ug/kg	C U
1,2-Dichlorobenzene	400.000	ug/kg	C U	400.000	ug/kg	C U	370.000	ug/kg	C U
1,2-Diphenylhydrazine	400.000	ug/kg	C U	NA			NA		
1,3-Dichlorobenzene	400.000	ug/kg	C U	400.000	ug/kg	C U	370.000	ug/kg	C U
1,4-Dichlorobenzene	400.000	ug/kg	C U	400.000	ug/kg	C U	370.000	ug/kg	C U
2,4,5-Trichlorophenol	980.000	ug/kg	C U	970.000	ug/kg	C U	900.000	ug/kg	C U
2,4,6-Trichlorophenol	400.000	ug/kg	C U	400.000	ug/kg	C U	370.000	ug/kg	C U
2,4-Dichlorophenol	400.000	ug/kg	C U	400.000	ug/kg	C U	370.000	ug/kg	C U
2,4-Dimethylphenol	400.000	ug/kg	C U	400.000	ug/kg	C U	370.000	ug/kg	C U
2,4-Dinitrophenol	2000.000	ug/kg	C UJ	1900.000	ug/kg	C UJ	1800.000	ug/kg	C UJ
2,4-Dinitrotoluene	400.000	ug/kg	C U	400.000	ug/kg	C U	370.000	ug/kg	C U
2,6-Dinitrotoluene	400.000	ug/kg	C U	400.000	ug/kg	C U	370.000	ug/kg	C U
2-Chloronaphthalene	400.000	ug/kg	C U	400.000	ug/kg	C U	370.000	ug/kg	C U
2-Chlorophenol	400.000	ug/kg	C U	400.000	ug/kg	C U	370.000	ug/kg	C U
2-Methylnaphthalene	400.000	ug/kg	C U	400.000	ug/kg	C U	370.000	ug/kg	C U
2-Methylphenol	400.000	ug/kg	C U	400.000	ug/kg	C U	370.000	ug/kg	C U
2-Nitroaniline	980.000	ug/kg	C U	970.000	ug/kg	C U	900.000	ug/kg	C U
2-Nitrophenol	400.000	ug/kg	C U	400.000	ug/kg	C U	370.000	ug/kg	C U

TABLE F-6A
(Continued)

PHASE II - CHEMICAL PARAMETERS

BORING NUMBER	1968					1968					1968				
SAMPLE NUMBER	110396					112835					112849				
	0.5-1					4.5-6.5					15.5-16.5				
SAMPLING DATE	03/22/93					04/20/93					04/20/93				
CHEMICAL PARAMETERS	RESULTS	UNITS	L		VQ	RESULTS	UNITS	L		VQ	RESULTS	UNITS	L		VQ
Semivolatile Organics															
3,3'-Dichlorobenzidine	400.000	ug/kg	C		U	400.000	ug/kg	C		U	370.000	ug/kg	C		U
3-Nitroaniline	980.000	ug/kg	C		U	970.000	ug/kg	C		U	900.000	ug/kg	C		U
4,6-Dinitro-2-methylphenol	980.000	ug/kg	C		UJ	970.000	ug/kg	C		U	900.000	ug/kg	C		U
4-Bromophenyl phenyl ether	400.000	ug/kg	C		U	400.000	ug/kg	C		U	370.000	ug/kg	C		U
4-Chloro-3-methylphenol	400.000	ug/kg	C		U	400.000	ug/kg	C		U	370.000	ug/kg	C		U
4-Chlorophenylphenyl ether	400.000	ug/kg	C		U	400.000	ug/kg	C		U	370.000	ug/kg	C		U
4-Methylphenol	400.000	ug/kg	C		U	400.000	ug/kg	C		U	370.000	ug/kg	C		U
4-Nitroaniline	980.000	ug/kg	C		U	970.000	ug/kg	C		U	900.000	ug/kg	C		U
4-Nitrophenol	980.000	ug/kg	C		U	970.000	ug/kg	C		UJ	900.000	ug/kg	C		UJ
Acenaphthene	400.000	ug/kg	C		U	400.000	ug/kg	C		U	370.000	ug/kg	C		U
Acenaphthylene	400.000	ug/kg	C		U	400.000	ug/kg	C		U	370.000	ug/kg	C		U
Anthracene	400.000	ug/kg	C		U	400.000	ug/kg	C		U	370.000	ug/kg	C		U
Benzo(a)anthracene	44.000	ug/kg	C		J	400.000	ug/kg	C		U	370.000	ug/kg	C		U
Benzo(a)pyrene	400.000	ug/kg	C		U	400.000	ug/kg	C		U	370.000	ug/kg	C		U
Benzo(b)fluoranthene	42.000	ug/kg	C		J	400.000	ug/kg	C		U	370.000	ug/kg	C		U
Benzo(g,h,i)perylene	400.000	ug/kg	C		U	400.000	ug/kg	C		U	370.000	ug/kg	C		U
Benzo(k)fluoranthene	400.000	ug/kg	C		U	400.000	ug/kg	C		U	370.000	ug/kg	C		U
Benzoic acid	2000.000	ug/kg	C		UJ	1900.000	ug/kg	C		UJ	1800.000	ug/kg	C		UJ
Benzyl alcohol	400.000	ug/kg	C		U	400.000	ug/kg	C		U	370.000	ug/kg	C		U
Butyl benzyl phthalate	400.000	ug/kg	C		U	400.000	ug/kg	C		U	370.000	ug/kg	C		U
Carbazole	400.000	ug/kg	C		U	400.000	ug/kg	C		U	370.000	ug/kg	C		U
Chrysene	58.000	ug/kg	C		J	400.000	ug/kg	C		U	370.000	ug/kg	C		U
Di-n-butyl phthalate	400.000	ug/kg	C		U	400.000	ug/kg	C		U	370.000	ug/kg	C		U
Di-n-octyl phthalate	400.000	ug/kg	C		U	400.000	ug/kg	C		UJ	370.000	ug/kg	C		UJ
Dibenzo(a,h)anthracene	400.000	ug/kg	C		U	400.000	ug/kg	C		U	370.000	ug/kg	C		U
Dibenzofuran	400.000	ug/kg	C		U	400.000	ug/kg	C		U	370.000	ug/kg	C		U
Diethyl phthalate	400.000	ug/kg	C		U	400.000	ug/kg	C		U	370.000	ug/kg	C		U
Dimethyl phthalate	400.000	ug/kg	C		U	400.000	ug/kg	C		U	370.000	ug/kg	C		U
Fluoranthene	96.000	ug/kg	C		J	400.000	ug/kg	C		U	370.000	ug/kg	C		U
Fluorene	400.000	ug/kg	C		U	400.000	ug/kg	C		U	370.000	ug/kg	C		U
Hexachlorobenzene	400.000	ug/kg	C		U	400.000	ug/kg	C		U	370.000	ug/kg	C		U
Hexachlorobutadiene	400.000	ug/kg	C		U	400.000	ug/kg	C		U	370.000	ug/kg	C		U
Hexachlorocyclopentadiene	400.000	ug/kg	C		U	400.000	ug/kg	C		UJ	370.000	ug/kg	C		UJ
Hexachloroethane	400.000	ug/kg	C		U	400.000	ug/kg	C		U	370.000	ug/kg	C		U
Indeno(1,2,3-cd)pyrene	400.000	ug/kg	C		U	400.000	ug/kg	C		U	370.000	ug/kg	C		U
Isophorone	400.000	ug/kg	C		U	400.000	ug/kg	C		U	370.000	ug/kg	C		U
N-Nitroso-di-n-propylamine	400.000	ug/kg	C		U	400.000	ug/kg	C		U	370.000	ug/kg	C		U
N-Nitrosodimethylamine	400.000	ug/kg	C		U	NA					NA				
N-Nitrosodiphenylamine	400.000	ug/kg	C		U	400.000	ug/kg	C		U	370.000	ug/kg	C		U
Naphthalene	400.000	ug/kg	C		U	400.000	ug/kg	C		U	370.000	ug/kg	C		U
Nitrobenzene	400.000	ug/kg	C		U	400.000	ug/kg	C		U	370.000	ug/kg	C		U
Pentachlorophenol	980.000	ug/kg	C		U	970.000	ug/kg	C		U	900.000	ug/kg	C		U

0717
5174

TABLE F-6A
(Continued)

PHASE II - CHEMICAL PARAMETERS

BORING NUMBER	1968			1968			1968		
SAMPLE NUMBER	110396			112835			112849		
	0.5-1			4.5-6.5			15.5-16.5		
SAMPLING DATE	03/22/93			04/20/93			04/20/93		
CHEMICAL PARAMETERS	RESULTS	UNITS	L VQ	RESULTS	UNITS	L VQ	RESULTS	UNITS	L VQ
Semivolatile Organics									
Phenanthrene	52.000	ug/kg	C J	400.000	ug/kg	C U	370.000	ug/kg	C U
Phenol	400.000	ug/kg	C U	400.000	ug/kg	C U	370.000	ug/kg	C U
Pyrene	76.000	ug/kg	C J	400.000	ug/kg	C U	370.000	ug/kg	C U
Tributyl phosphate	400.000	ug/kg	C U	NA			NA		
bis(2-Chloroethoxy)methane	400.000	ug/kg	C U	400.000	ug/kg	C U	370.000	ug/kg	C U
bis(2-Chloroethyl)ether	400.000	ug/kg	C U	400.000	ug/kg	C U	370.000	ug/kg	C U
bis(2-Chloroisopropyl) ether	400.000	ug/kg	C U	400.000	ug/kg	C UJ	370.000	ug/kg	C UJ
bis(2-Ethylhexyl) phthalate	51.000	ug/kg	C J	400.000	ug/kg	C U	370.000	ug/kg	C U
p-Chloroaniline	400.000	ug/kg	C U	400.000	ug/kg	C U	370.000	ug/kg	C U
Pesticide Organics/PCBs									
4,4'-DDD	4.000	ug/kg	C U	3.900	ug/kg	C U	3.700	ug/kg	C U
4,4'-DDE	4.000	ug/kg	C U	3.900	ug/kg	C U	3.700	ug/kg	C U
4,4'-DDT	4.000	ug/kg	C U	3.900	ug/kg	C U	3.700	ug/kg	C U
Aldrin	2.100	ug/kg	C U	2.000	ug/kg	C U	1.900	ug/kg	C U
Aroclor-1016	40.000	ug/kg	C U	39.000	ug/kg	C U	37.000	ug/kg	C U
Aroclor-1221	82.000	ug/kg	C U	80.000	ug/kg	C U	76.000	ug/kg	C U
Aroclor-1232	40.000	ug/kg	C U	39.000	ug/kg	C U	37.000	ug/kg	C U
Aroclor-1242	40.000	ug/kg	C U	39.000	ug/kg	C U	37.000	ug/kg	C U
Aroclor-1248	40.000	ug/kg	C U	39.000	ug/kg	C U	37.000	ug/kg	C U
Aroclor-1254	40.000	ug/kg	C U	39.000	ug/kg	C U	37.000	ug/kg	C U
Aroclor-1260	40.000	ug/kg	C U	39.000	ug/kg	C U	37.000	ug/kg	C U
Dieldrin	16.000	ug/kg	C -	3.900	ug/kg	C U	3.700	ug/kg	C U
Endosulfan II	4.000	ug/kg	C U	3.900	ug/kg	C U	3.700	ug/kg	C U
Endosulfan sulfate	4.000	ug/kg	C U	3.900	ug/kg	C U	3.700	ug/kg	C U
Endosulfan-I	2.100	ug/kg	C U	2.000	ug/kg	C U	1.900	ug/kg	C U
Endrin	4.000	ug/kg	C U	3.900	ug/kg	C U	3.700	ug/kg	C U
Endrin aldehyde	4.000	ug/kg	C U	3.900	ug/kg	C U	3.700	ug/kg	C U
Endrin ketone	5.300	ug/kg	C J	3.900	ug/kg	C U	3.700	ug/kg	C U
Heptachlor	2.100	ug/kg	C U	2.000	ug/kg	C U	1.900	ug/kg	C U
Heptachlor epoxide	2.100	ug/kg	C U	2.000	ug/kg	C U	1.900	ug/kg	C U
Methoxychlor	21.000	ug/kg	C U	20.000	ug/kg	C U	19.000	ug/kg	C U
Toxaphene	210.000	ug/kg	C U	200.000	ug/kg	C U	190.000	ug/kg	C U
alpha-BHC	2.100	ug/kg	C U	2.000	ug/kg	C U	1.900	ug/kg	C U
alpha-Chlordane	8.000	ug/kg	C J	2.000	ug/kg	C U	1.900	ug/kg	C U
beta-BHC	2.100	ug/kg	C U	2.000	ug/kg	C U	1.900	ug/kg	C U
delta-BHC	2.100	ug/kg	C U	2.000	ug/kg	C U	1.900	ug/kg	C U
gamma-BHC (Lindane)	2.100	ug/kg	C U	2.000	ug/kg	C U	1.900	ug/kg	C U
gamma-Chlordane	7.200	ug/kg	C NJ	2.000	ug/kg	C U	1.900	ug/kg	C U

TABLE F-6A
(Continued)

PHASE II - CHEMICAL PARAMETERS

BORING NUMBER	1969					1969					1969				
SAMPLE NUMBER	110339					112559					112563				
	0.5-1					4.5-6					9-10.5				
SAMPLING DATE	03/22/93					04/15/93					04/15/93				
CHEMICAL PARAMETERS	RESULTS	UNITS	L	VQ		RESULTS	UNITS	L	VQ		RESULTS	UNITS	L	VQ	
Inorganics															
Aluminum	22800.000	mg/kg	C	-		4600.000	mg/kg	D	-		11000.000	mg/kg	C	-	
Antimony	1.300	mg/kg	C	R		1.700	mg/kg	D	UJ		1.200	mg/kg	C	U	
Arsenic	9.100	mg/kg	C	-		5.100	mg/kg	D	-		7.400	mg/kg	C	-	
Barium	124.000	mg/kg	C	-		32.100	mg/kg	D	-		67.500	mg/kg	C	-	
Beryllium	2.200	mg/kg	C	-		0.480	mg/kg	D	U		0.660	mg/kg	C	-	
Cadmium	1.300	mg/kg	C	U		1.200	mg/kg	D	U		1.200	mg/kg	C	U	
Calcium	61500.000	mg/kg	C	-		112000.000	mg/kg	D	-		85100.000	mg/kg	C	-	
Chromium	13.200	mg/kg	C	-		6.100	mg/kg	D	-		13.300	mg/kg	C	-	
Cobalt	4.600	mg/kg	C	-		5.000	mg/kg	D	-		7.500	mg/kg	C	-	
Copper	16.000	mg/kg	C	-		12.300	mg/kg	D	-		18.100	mg/kg	C	-	
Cyanide	0.130	mg/kg	C	U		0.120	mg/kg	D	U		0.130	mg/kg	C	U	
Iron	18500.000	mg/kg	C	-		13400.000	mg/kg	D	-		21100.000	mg/kg	C	-	
Lead	16.800	mg/kg	C	J		9.000	mg/kg	D	-		10.400	mg/kg	C	-	
Magnesium	14400.000	mg/kg	C	J		41300.000	mg/kg	D	-		27800.000	mg/kg	C	-	
Manganese	911.000	mg/kg	C	-		606.000	mg/kg	D	-		425.000	mg/kg	C	-	
Mercury	0.110	mg/kg	C	U		0.120	mg/kg	D	U		0.120	mg/kg	C	-	
Molybdenum	5.200	mg/kg	C	-		4.800	mg/kg	D	U		6.200	mg/kg	C	-	
Nickel	12.800	mg/kg	C	-		16.400	mg/kg	D	-		22.700	mg/kg	C	-	
Potassium	1280.000	mg/kg	C	-		743.000	mg/kg	D	-		1790.000	mg/kg	C	-	
Selenium	0.460	mg/kg	C	UJ		0.450	mg/kg	D	U		0.370	mg/kg	C	U	
Silicon	597.000	mg/kg	C	J		708.000	mg/kg	D	-		657.000	mg/kg	C	-	
Silver	5.300	mg/kg	C	-		3.700	mg/kg	D	-		5.900	mg/kg	C	-	
Sodium	259.000	mg/kg	C	-		148.000	mg/kg	D	-		124.000	mg/kg	C	-	
Thallium	0.460	mg/kg	C	U		0.450	mg/kg	D	U		0.370	mg/kg	C	U	
Vanadium	25.000	mg/kg	C	-		14.000	mg/kg	D	-		23.500	mg/kg	C	-	
Zinc	42.600	mg/kg	C	-		31.700	mg/kg	D	-		54.900	mg/kg	C	-	
Volatile Organics															
1,1,1-Trichloroethane	7.000	ug/kg	C	U		12.000	ug/kg	D	U		12.000	ug/kg	C	U	
1,1,2,2-Tetrachloroethane	7.000	ug/kg	C	U		12.000	ug/kg	D	U		12.000	ug/kg	C	U	
1,1,2-Trichloroethane	7.000	ug/kg	C	U		12.000	ug/kg	D	U		12.000	ug/kg	C	U	
1,1-Dichloroethane	7.000	ug/kg	C	UJ		12.000	ug/kg	D	U		12.000	ug/kg	C	U	
1,1-Dichloroethene	7.000	ug/kg	C	U		12.000	ug/kg	D	U		12.000	ug/kg	C	U	
1,2-Dichloroethane	7.000	ug/kg	C	U		12.000	ug/kg	D	U		12.000	ug/kg	C	U	
1,2-Dichloroethene	7.000	ug/kg	C	U		12.000	ug/kg	D	U		12.000	ug/kg	C	U	
1,2-Dichloropropane	7.000	ug/kg	C	U		12.000	ug/kg	D	U		12.000	ug/kg	C	U	
2-Butanone	13.000	ug/kg	C	UJ		12.000	ug/kg	D	U		12.000	ug/kg	C	U	
2-Hexanone	13.000	ug/kg	C	U		12.000	ug/kg	D	UJ		12.000	ug/kg	C	UJ	
4-Methyl-2-pentanone	13.000	ug/kg	C	U		12.000	ug/kg	D	UJ		12.000	ug/kg	C	UJ	
Acetone	13.000	ug/kg	C	U		12.000	ug/kg	D	U		12.000	ug/kg	C	U	
Benzene	7.000	ug/kg	C	U		12.000	ug/kg	D	U		12.000	ug/kg	C	U	

TABLE F-6A
(Continued)

PHASE II - CHEMICAL PARAMETERS

BORING NUMBER	1969				1969				1969			
SAMPLE NUMBER	110339				112559				112563			
	0.5-1				4.5-6				9-10.5			
SAMPLING DATE	03/22/93				04/15/93				04/15/93			
CHEMICAL PARAMETERS	RESULTS	UNITS	L	VQ	RESULTS	UNITS	L	VQ	RESULTS	UNITS	L	VQ
Volatile Organics												
Bromodichloromethane	7.000	ug/kg	C	U	12.000	ug/kg	D	U	12.000	ug/kg	C	U
Bromoform	7.000	ug/kg	C	U	12.000	ug/kg	D	U	12.000	ug/kg	C	U
Bromomethane	13.000	ug/kg	C	UJ	12.000	ug/kg	D	UJ	12.000	ug/kg	C	UJ
Carbon Tetrachloride	7.000	ug/kg	C	U	12.000	ug/kg	D	U	12.000	ug/kg	C	U
Carbon disulfide	7.000	ug/kg	C	U	12.000	ug/kg	D	U	12.000	ug/kg	C	U
Chlorobenzene	7.000	ug/kg	C	U	12.000	ug/kg	D	U	12.000	ug/kg	C	U
Chloroethane	13.000	ug/kg	C	UJ	12.000	ug/kg	D	UJ	12.000	ug/kg	C	UJ
Chloroform	7.000	ug/kg	C	U	12.000	ug/kg	D	U	12.000	ug/kg	C	U
Chloromethane	13.000	ug/kg	C	U	12.000	ug/kg	D	U	12.000	ug/kg	C	U
Dibromochloromethane	7.000	ug/kg	C	U	12.000	ug/kg	D	U	12.000	ug/kg	C	U
Ethylbenzene	7.000	ug/kg	C	U	12.000	ug/kg	D	U	12.000	ug/kg	C	U
Methylene chloride	13.000	ug/kg	C	UJ	12.000	ug/kg	D	U	12.000	ug/kg	C	U
Styrene	7.000	ug/kg	C	U	12.000	ug/kg	D	U	12.000	ug/kg	C	U
Tetrachloroethene	7.000	ug/kg	C	U	12.000	ug/kg	D	U	12.000	ug/kg	C	U
Toluene	7.000	ug/kg	C	U	12.000	ug/kg	D	U	17.000	ug/kg	C	-
Trichloroethene	7.000	ug/kg	C	U	12.000	ug/kg	D	U	12.000	ug/kg	C	U
Vinyl Acetate	13.000	ug/kg	C	U	12.000	ug/kg	D	UJ	12.000	ug/kg	C	UJ
Vinyl chloride	13.000	ug/kg	C	U	12.000	ug/kg	D	U	12.000	ug/kg	C	U
Xylenes, Total	7.000	ug/kg	C	U	12.000	ug/kg	D	U	12.000	ug/kg	C	U
cis-1,3-Dichloropropene	7.000	ug/kg	C	U	12.000	ug/kg	D	U	12.000	ug/kg	C	U
trans-1,3-Dichloropropene	7.000	ug/kg	C	U	12.000	ug/kg	D	U	12.000	ug/kg	C	U
Semivolatile Organics												
1,2,4-Trichlorobenzene	440.000	ug/kg	C	U	420.000	ug/kg	D	U	420.000	ug/kg	C	U
1,2-Dichlorobenzene	440.000	ug/kg	C	U	420.000	ug/kg	D	U	420.000	ug/kg	C	U
1,2-Diphenylhydrazine	440.000	ug/kg	C	U	NA				NA			
1,3-Dichlorobenzene	440.000	ug/kg	C	U	420.000	ug/kg	D	U	420.000	ug/kg	C	U
1,4-Dichlorobenzene	440.000	ug/kg	C	U	420.000	ug/kg	D	U	420.000	ug/kg	C	U
2,4,5-Trichlorophenol	1100.000	ug/kg	C	U	1000.000	ug/kg	D	U	1000.000	ug/kg	C	U
2,4,6-Trichlorophenol	440.000	ug/kg	C	U	420.000	ug/kg	D	U	420.000	ug/kg	C	U
2,4-Dichlorophenol	440.000	ug/kg	C	U	420.000	ug/kg	D	U	420.000	ug/kg	C	U
2,4-Dimethylphenol	440.000	ug/kg	C	U	420.000	ug/kg	D	U	420.000	ug/kg	C	U
2,4-Dinitrophenol	2100.000	ug/kg	C	UJ	1000.000	ug/kg	D	UJ	1000.000	ug/kg	C	UJ
2,4-Dinitrotoluene	440.000	ug/kg	C	U	420.000	ug/kg	D	U	420.000	ug/kg	C	U
2,6-Dinitrotoluene	440.000	ug/kg	C	U	420.000	ug/kg	D	U	420.000	ug/kg	C	U
2-Chloronaphthalene	440.000	ug/kg	C	U	420.000	ug/kg	D	U	420.000	ug/kg	C	U
2-Chlorophenol	440.000	ug/kg	C	U	420.000	ug/kg	D	U	420.000	ug/kg	C	U
2-Methylnaphthalene	440.000	ug/kg	C	U	420.000	ug/kg	D	U	420.000	ug/kg	C	U
2-Methylphenol	440.000	ug/kg	C	U	420.000	ug/kg	D	U	420.000	ug/kg	C	U
2-Nitroaniline	1100.000	ug/kg	C	U	1000.000	ug/kg	D	U	1000.000	ug/kg	C	U
2-Nitrophenol	440.000	ug/kg	C	U	420.000	ug/kg	D	U	420.000	ug/kg	C	U

TABLE F-6A
(Continued)

PHASE II - CHEMICAL PARAMETERS

BORING NUMBER	1969			1969			1969		
SAMPLE NUMBER	110339			112559			112563		
	0.5-1			4.5-6			9-10.5		
SAMPLING DATE	03/22/93			04/15/93			04/15/93		
CHEMICAL PARAMETERS	RESULTS	UNITS	L VQ	RESULTS	UNITS	L VQ	RESULTS	UNITS	L VQ
Semivolatile Organics									
3,3'-Dichlorobenzidine	440.000	ug/kg	C U	420.000	ug/kg	D U	420.000	ug/kg	C U
3-Nitroaniline	1100.000	ug/kg	C U	1000.000	ug/kg	D U	1000.000	ug/kg	C U
4,6-Dinitro-2-methylphenol	1100.000	ug/kg	C UJ	1000.000	ug/kg	D R	1000.000	ug/kg	C R
4-Bromophenyl phenyl ether	440.000	ug/kg	C U	420.000	ug/kg	D UJ	420.000	ug/kg	C UJ
4-Chloro-3-methylphenol	440.000	ug/kg	C U	420.000	ug/kg	D U	420.000	ug/kg	C U
4-Chlorophenylphenyl ether	440.000	ug/kg	C U	420.000	ug/kg	D U	420.000	ug/kg	C U
4-Methylphenol	440.000	ug/kg	C U	420.000	ug/kg	D U	420.000	ug/kg	C U
4-Nitroaniline	1100.000	ug/kg	C U	1000.000	ug/kg	D R	1000.000	ug/kg	C R
4-Nitrophenol	1100.000	ug/kg	C U	1000.000	ug/kg	D U	1000.000	ug/kg	C U
Acenaphthene	440.000	ug/kg	C U	420.000	ug/kg	D U	420.000	ug/kg	C U
Acenaphthylene	440.000	ug/kg	C U	420.000	ug/kg	D U	420.000	ug/kg	C U
Anthracene	440.000	ug/kg	C U	420.000	ug/kg	D U	420.000	ug/kg	C U
Benzo(a)anthracene	440.000	ug/kg	C U	420.000	ug/kg	D U	420.000	ug/kg	C U
Benzo(a)pyrene	440.000	ug/kg	C U	420.000	ug/kg	D U	420.000	ug/kg	C U
Benzo(b)fluoranthene	440.000	ug/kg	C U	420.000	ug/kg	D U	420.000	ug/kg	C U
Benzo(g,h,i)perylene	440.000	ug/kg	C U	420.000	ug/kg	D UJ	420.000	ug/kg	C UJ
Benzo(k)fluoranthene	440.000	ug/kg	C U	420.000	ug/kg	D U	420.000	ug/kg	C U
Benzoic acid	57.000	ug/kg	C J	2000.000	ug/kg	D UJ	2000.000	ug/kg	C UJ
Benzyl alcohol	440.000	ug/kg	C U	420.000	ug/kg	D U	420.000	ug/kg	C U
Butyl benzyl phthalate	440.000	ug/kg	C U	420.000	ug/kg	D U	420.000	ug/kg	C U
Carbazole	440.000	ug/kg	C U	420.000	ug/kg	D U	420.000	ug/kg	C U
Chrysene	440.000	ug/kg	C U	420.000	ug/kg	D U	420.000	ug/kg	C U
Di-n-butyl phthalate	440.000	ug/kg	C U	420.000	ug/kg	D U	420.000	ug/kg	C U
Di-n-octyl phthalate	440.000	ug/kg	C U	420.000	ug/kg	D U	420.000	ug/kg	C U
Dibenzo(a,h)anthracene	440.000	ug/kg	C U	420.000	ug/kg	D U	420.000	ug/kg	C U
Dibenzofuran	440.000	ug/kg	C U	420.000	ug/kg	D U	420.000	ug/kg	C U
Diethyl phthalate	440.000	ug/kg	C U	420.000	ug/kg	D U	420.000	ug/kg	C U
Dimethyl phthalate	440.000	ug/kg	C U	420.000	ug/kg	D U	420.000	ug/kg	C U
Fluoranthene	440.000	ug/kg	C U	420.000	ug/kg	D U	420.000	ug/kg	C U
Fluorene	440.000	ug/kg	C U	420.000	ug/kg	D U	420.000	ug/kg	C U
Hexachlorobenzene	440.000	ug/kg	C U	420.000	ug/kg	D U	420.000	ug/kg	C U
Hexachlorobutadiene	440.000	ug/kg	C U	420.000	ug/kg	D U	420.000	ug/kg	C U
Hexachlorocyclopentadiene	440.000	ug/kg	C U	420.000	ug/kg	D UJ	420.000	ug/kg	C UJ
Hexachloroethane	440.000	ug/kg	C U	420.000	ug/kg	D U	420.000	ug/kg	C U
Indeno(1,2,3-cd)pyrene	440.000	ug/kg	C U	420.000	ug/kg	D U	420.000	ug/kg	C U
Isophorone	440.000	ug/kg	C U	420.000	ug/kg	D U	420.000	ug/kg	C U
N-Nitroso-di-n-propylamine	440.000	ug/kg	C U	420.000	ug/kg	D UJ	420.000	ug/kg	C UJ
N-Nitrosodimethylamine	440.000	ug/kg	C U	NA			NA		
N-Nitrosodiphenylamine	440.000	ug/kg	C U	420.000	ug/kg	D U	420.000	ug/kg	C U
Naphthalene	440.000	ug/kg	C U	420.000	ug/kg	D U	420.000	ug/kg	C U
Nitrobenzene	440.000	ug/kg	C U	420.000	ug/kg	D U	420.000	ug/kg	C U
Pentachlorophenol	1100.000	ug/kg	C U	1000.000	ug/kg	D UJ	1000.000	ug/kg	C UJ

TABLE F-6A
(Continued)

PHASE II - CHEMICAL PARAMETERS

BORING NUMBER	1969				1969				1969			
SAMPLE NUMBER	110339				112559				112563			
	0.5-1				4.5-6				9-10.5			
SAMPLING DATE	03/22/93				04/15/93				04/15/93			
CHEMICAL PARAMETERS	RESULTS	UNITS	L	VQ	RESULTS	UNITS	L	VQ	RESULTS	UNITS	L	VQ
Semivolatile Organics												
Phenanthrene	440.000	ug/kg	C	U	420.000	ug/kg	D	U	420.000	ug/kg	C	U
Phenol	440.000	ug/kg	C	U	420.000	ug/kg	D	U	420.000	ug/kg	C	U
Pyrene	440.000	ug/kg	C	U	420.000	ug/kg	D	U	420.000	ug/kg	C	U
Tributyl phosphate	440.000	ug/kg	C	U	NA				NA			
bis(2-Chloroethoxy)methane	440.000	ug/kg	C	U	420.000	ug/kg	D	U	420.000	ug/kg	C	U
bis(2-Chloroethyl)ether	440.000	ug/kg	C	U	420.000	ug/kg	D	UJ	420.000	ug/kg	C	U
bis(2-Chloroisopropyl) ether	440.000	ug/kg	C	U	420.000	ug/kg	D	U	420.000	ug/kg	C	UJ
bis(2-Ethylhexyl) phthalate	110.000	ug/kg	C	J	420.000	ug/kg	D	U	420.000	ug/kg	C	U
p-Chloroaniline	440.000	ug/kg	C	U	420.000	ug/kg	D	U	420.000	ug/kg	C	U
Pesticide Organics/PCBs												
4,4'-DDD	4.500	ug/kg	C	U	4.200	ug/kg	D	U	NA			
4,4'-DDE	4.500	ug/kg	C	U	4.200	ug/kg	D	U	NA			
4,4'-DDT	4.500	ug/kg	C	U	4.200	ug/kg	D	U	NA			
Aldrin	2.300	ug/kg	C	U	2.200	ug/kg	D	U	NA			
Aroclor-1016	45.000	ug/kg	C	U	42.000	ug/kg	D	U	NA			
Aroclor-1221	91.000	ug/kg	C	U	85.000	ug/kg	D	U	NA			
Aroclor-1232	45.000	ug/kg	C	U	42.000	ug/kg	D	U	NA			
Aroclor-1242	45.000	ug/kg	C	U	42.000	ug/kg	D	U	NA			
Aroclor-1248	45.000	ug/kg	C	U	42.000	ug/kg	D	U	NA			
Aroclor-1254	54.000	ug/kg	C	-	42.000	ug/kg	D	U	NA			
Aroclor-1260	45.000	ug/kg	C	U	42.000	ug/kg	D	U	NA			
Dieldrin	4.500	ug/kg	C	U	4.200	ug/kg	D	U	NA			
Endosulfan II	4.500	ug/kg	C	U	4.200	ug/kg	D	U	NA			
Endosulfan sulfate	4.500	ug/kg	C	U	4.200	ug/kg	D	U	NA			
Endosulfan-I	2.300	ug/kg	C	U	2.200	ug/kg	D	U	NA			
Endrin	4.500	ug/kg	C	U	4.200	ug/kg	D	U	NA			
Endrin aldehyde	4.500	ug/kg	C	U	4.200	ug/kg	D	U	NA			
Endrin ketone	4.500	ug/kg	C	U	4.200	ug/kg	D	U	NA			
Heptachlor	2.300	ug/kg	C	U	2.200	ug/kg	D	U	NA			
Heptachlor epoxide	2.300	ug/kg	C	U	2.200	ug/kg	D	U	NA			
Methoxychlor	23.000	ug/kg	C	U	22.000	ug/kg	D	U	NA			
Toxaphene	230.000	ug/kg	C	U	220.000	ug/kg	D	U	NA			
alpha-BHC	2.300	ug/kg	C	U	2.200	ug/kg	D	U	NA			
alpha-Chlordane	2.300	ug/kg	C	U	2.200	ug/kg	D	U	NA			
beta-BHC	2.300	ug/kg	C	U	2.200	ug/kg	D	U	NA			
delta-BHC	2.300	ug/kg	C	U	2.200	ug/kg	D	U	NA			
gamma-BHC (Lindane)	2.300	ug/kg	C	U	2.200	ug/kg	D	U	NA			
gamma-Chlordane	2.300	ug/kg	C	U	2.200	ug/kg	D	U	NA			

TABLE F-6A
(Continued)

PHASE II - CHEMICAL PARAMETERS

BORING NUMBER	1970					1970					1971				
SAMPLE NUMBER	112690					112893					110327				
	4-5.5					9-10.5					0.5-1				
SAMPLING DATE	04/18/93					04/18/93					03/22/93				
CHEMICAL PARAMETERS	RESULTS	UNITS	L	VQ		RESULTS	UNITS	L	VQ		RESULTS	UNITS	L	VQ	
Inorganics															
Aluminum	10600.000	mg/kg	C	-		14300.000	mg/kg	C	-		11600.000	mg/kg	C	-	
Antimony	1.200	mg/kg	C	J		1.200	mg/kg	C	UJ		0.940	mg/kg	C	R	
Arsenic	7.100	mg/kg	C	-		7.100	mg/kg	C	-		4.900	mg/kg	C	-	
Barium	100.000	mg/kg	C	-		119.000	mg/kg	C	-		58.900	mg/kg	C	-	
Beryllium	0.480	mg/kg	C	U		0.650	mg/kg	C	-		0.780	mg/kg	C	-	
Cadmium	1.200	mg/kg	C	U		1.200	mg/kg	C	U		0.940	mg/kg	C	U	
Calcium	104000.000	mg/kg	C	-		33100.000	mg/kg	C	-		6410.000	mg/kg	C	-	
Chromium	16.200	mg/kg	C	-		15.800	mg/kg	C	-		14.400	mg/kg	C	-	
Cobalt	5.800	mg/kg	C	-		7.100	mg/kg	C	-		10.600	mg/kg	C	-	
Copper	34.200	mg/kg	C	-		18.000	mg/kg	C	-		17.300	mg/kg	C	-	
Cyanide	0.120	mg/kg	C	U		0.130	mg/kg	C	U		0.000	mg/L	C	U	
Iron	28200.000	mg/kg	C	-		23200.000	mg/kg	C	-		19800.000	mg/kg	C	-	
Lead	40.000	mg/kg	C	-		12.800	mg/kg	C	-		11.700	mg/kg	C	J	
Magnesium	21000.000	mg/kg	C	-		12900.000	mg/kg	C	-		3720.000	mg/kg	C	J	
Manganese	549.000	mg/kg	C	-		448.000	mg/kg	C	-		225.000	mg/kg	C	-	
Mercury	0.110	mg/kg	C	U		0.120	mg/kg	C	U		0.110	mg/kg	C	U	
Molybdenum	9.800	mg/kg	C	-		5.200	mg/kg	C	-		6.100	mg/kg	C	-	
Nickel	20.800	mg/kg	C	-		18.400	mg/kg	C	-		16.300	mg/kg	C	-	
Potassium	1450.000	mg/kg	C	-		1340.000	mg/kg	C	-		1110.000	mg/kg	C	-	
Selenium	0.370	mg/kg	C	UJ		0.460	mg/kg	C	UJ		0.400	mg/kg	C	UJ	
Silicon	996.000	mg/kg	C	-		666.000	mg/kg	C	-		556.000	mg/kg	C	J	
Silver	7.000	mg/kg	C	-		6.000	mg/kg	C	-		6.300	mg/kg	C	-	
Sodium	151.000	mg/kg	C	-		116.000	mg/kg	C	-		51.700	mg/kg	C	-	
Thallium	0.370	mg/kg	C	U		0.460	mg/kg	C	U		0.400	mg/kg	C	U	
Vanadium	29.600	mg/kg	C	-		34.200	mg/kg	C	-		30.900	mg/kg	C	-	
Zinc	81.700	mg/kg	C	-		57.000	mg/kg	C	-		51.800	mg/kg	C	-	
Volatile Organics															
1,1,1-Trichloroethane	12.000	ug/kg	C	U		13.000	ug/kg	C	U		6.000	ug/kg	C	U	
1,1,2,2-Tetrachloroethane	12.000	ug/kg	C	U		13.000	ug/kg	C	U		6.000	ug/kg	C	U	
1,1,2-Trichloroethane	12.000	ug/kg	C	U		13.000	ug/kg	C	U		6.000	ug/kg	C	U	
1,1-Dichloroethane	12.000	ug/kg	C	U		13.000	ug/kg	C	U		6.000	ug/kg	C	UJ	
1,1-Dichloroethene	12.000	ug/kg	C	U		13.000	ug/kg	C	U		6.000	ug/kg	C	U	
1,2-Dichloroethane	12.000	ug/kg	C	U		13.000	ug/kg	C	U		6.000	ug/kg	C	U	
1,2-Dichloroethene	12.000	ug/kg	C	U		13.000	ug/kg	C	U		6.000	ug/kg	C	U	
1,2-Dichloropropane	12.000	ug/kg	C	U		13.000	ug/kg	C	U		6.000	ug/kg	C	U	
2-Butanone	12.000	ug/kg	C	U		13.000	ug/kg	C	U		12.000	ug/kg	C	UJ	
2-Hexanone	12.000	ug/kg	C	U		13.000	ug/kg	C	U		12.000	ug/kg	C	U	
4-Methyl-2-pentanone	12.000	ug/kg	C	U		13.000	ug/kg	C	U		12.000	ug/kg	C	U	
Acetone	12.000	ug/kg	C	U		5.000	ug/kg	C	J		21.000	ug/kg	C	U	
Benzene	12.000	ug/kg	C	U		13.000	ug/kg	C	U		6.000	ug/kg	C	U	

TABLE F-6A
(Continued)

PHASE II - CHEMICAL PARAMETERS

BORING NUMBER	1970			1970			1971		
SAMPLE NUMBER	112690			112893			110327		
	4-5.5			9-10.5			0.5-1		
SAMPLING DATE	04/18/93			04/18/93			03/22/93		
CHEMICAL PARAMETERS	RESULTS	UNITS	L VQ	RESULTS	UNITS	L VQ	RESULTS	UNITS	L VQ
Volatile Organics									
Bromodichloromethane	12.000	ug/kg	C U	13.000	ug/kg	C U	6.000	ug/kg	C U
Bromoform	12.000	ug/kg	C U	13.000	ug/kg	C U	6.000	ug/kg	C U
Bromomethane	12.000	ug/kg	C U	13.000	ug/kg	C U	12.000	ug/kg	C UJ
Carbon Tetrachloride	12.000	ug/kg	C U	13.000	ug/kg	C U	6.000	ug/kg	C U
Carbon disulfide	12.000	ug/kg	C UJ	13.000	ug/kg	C UJ	6.000	ug/kg	C U
Chlorobenzene	12.000	ug/kg	C U	13.000	ug/kg	C U	6.000	ug/kg	C U
Chloroethane	12.000	ug/kg	C U	13.000	ug/kg	C U	12.000	ug/kg	C UJ
Chloroform	12.000	ug/kg	C U	13.000	ug/kg	C U	6.000	ug/kg	C U
Chloromethane	12.000	ug/kg	C U	13.000	ug/kg	C U	12.000	ug/kg	C U
Dibromochloromethane	12.000	ug/kg	C U	13.000	ug/kg	C U	6.000	ug/kg	C U
Ethylbenzene	12.000	ug/kg	C U	13.000	ug/kg	C U	6.000	ug/kg	C U
Methylene chloride	15.000	ug/kg	C U	13.000	ug/kg	C U	12.000	ug/kg	C UJ
Styrene	12.000	ug/kg	C U	13.000	ug/kg	C U	6.000	ug/kg	C U
Tetrachloroethene	12.000	ug/kg	C U	13.000	ug/kg	C U	6.000	ug/kg	C U
Toluene	1.000	ug/kg	C J	13.000	ug/kg	C U	6.000	ug/kg	C U
Trichloroethene	12.000	ug/kg	C U	13.000	ug/kg	C U	6.000	ug/kg	C U
Vinyl Acetate	12.000	ug/kg	C U	13.000	ug/kg	C U	12.000	ug/kg	C U
Vinyl chloride	12.000	ug/kg	C U	13.000	ug/kg	C U	12.000	ug/kg	C U
Xylenes, Total	12.000	ug/kg	C U	13.000	ug/kg	C U	6.000	ug/kg	C U
cis-1,3-Dichloropropene	12.000	ug/kg	C U	13.000	ug/kg	C U	6.000	ug/kg	C U
trans-1,3-Dichloropropene	12.000	ug/kg	C U	13.000	ug/kg	C U	6.000	ug/kg	C U
Semivolatile Organics									
1,2,4-Trichlorobenzene	400.000	ug/kg	C U	430.000	ug/kg	C U	410.000	ug/kg	C U
1,2-Dichlorobenzene	400.000	ug/kg	C U	430.000	ug/kg	C U	410.000	ug/kg	C U
1,2-Diphenylhydrazine	NA			NA			410.000	ug/kg	C U
1,3-Dichlorobenzene	400.000	ug/kg	C U	430.000	ug/kg	C U	410.000	ug/kg	C U
1,4-Dichlorobenzene	400.000	ug/kg	C U	430.000	ug/kg	C U	410.000	ug/kg	C U
2,4,5-Trichlorophenol	2000.000	ug/kg	C U	2100.000	ug/kg	C U	1000.000	ug/kg	C U
2,4,6-Trichlorophenol	400.000	ug/kg	C U	430.000	ug/kg	C U	410.000	ug/kg	C U
2,4-Dichlorophenol	400.000	ug/kg	C U	430.000	ug/kg	C U	410.000	ug/kg	C U
2,4-Dimethylphenol	400.000	ug/kg	C U	430.000	ug/kg	C U	410.000	ug/kg	C U
2,4-Dinitrophenol	2000.000	ug/kg	C UJ	2100.000	ug/kg	C UJ	2000.000	ug/kg	C UJ
2,4-Dinitrotoluene	400.000	ug/kg	C U	430.000	ug/kg	C U	410.000	ug/kg	C U
2,6-Dinitrotoluene	400.000	ug/kg	C U	430.000	ug/kg	C U	410.000	ug/kg	C U
2-Chloronaphthalene	400.000	ug/kg	C U	430.000	ug/kg	C U	410.000	ug/kg	C U
2-Chlorophenol	400.000	ug/kg	C U	430.000	ug/kg	C U	410.000	ug/kg	C U
2-Methylnaphthalene	400.000	ug/kg	C U	430.000	ug/kg	C U	410.000	ug/kg	C U
2-Methylphenol	400.000	ug/kg	C U	430.000	ug/kg	C U	410.000	ug/kg	C U
2-Nitroaniline	2000.000	ug/kg	C U	2100.000	ug/kg	C U	1000.000	ug/kg	C U
2-Nitrophenol	400.000	ug/kg	C U	430.000	ug/kg	C U	410.000	ug/kg	C U

TABLE F-6A
(Continued)

PHASE II - CHEMICAL PARAMETERS

BORING NUMBER	1970			1970			1971		
SAMPLE NUMBER	112690			112893			110327		
	4-5.5			9-10.5			0.5-1		
SAMPLING DATE	04/18/93			04/18/93			03/22/93		
CHEMICAL PARAMETERS	RESULTS	UNITS	L VQ	RESULTS	UNITS	L VQ	RESULTS	UNITS	L VQ
Semivolatile Organics									
3,3'-Dichlorobenzidine	400.000	ug/kg	C U	430.000	ug/kg	C U	410.000	ug/kg	C U
3-Nitroaniline	2000.000	ug/kg	C U	2100.000	ug/kg	C U	1000.000	ug/kg	C U
4,6-Dinitro-2-methylphenol	2000.000	ug/kg	C UJ	2100.000	ug/kg	C UJ	1000.000	ug/kg	C UJ
4-Bromophenyl phenyl ether	400.000	ug/kg	C U	430.000	ug/kg	C U	410.000	ug/kg	C U
4-Chloro-3-methylphenol	400.000	ug/kg	C U	430.000	ug/kg	C U	410.000	ug/kg	C U
4-Chlorophenylphenyl ether	400.000	ug/kg	C U	430.000	ug/kg	C U	410.000	ug/kg	C U
4-Methylphenol	400.000	ug/kg	C U	430.000	ug/kg	C U	410.000	ug/kg	C U
4-Nitroaniline	2000.000	ug/kg	C U	2100.000	ug/kg	C U	1000.000	ug/kg	C U
4-Nitrophenol	2000.000	ug/kg	C UJ	2100.000	ug/kg	C UJ	1000.000	ug/kg	C U
Acenaphthene	400.000	ug/kg	C U	430.000	ug/kg	C U	410.000	ug/kg	C U
Acenaphthylene	400.000	ug/kg	C U	430.000	ug/kg	C U	410.000	ug/kg	C U
Anthracene	400.000	ug/kg	C U	430.000	ug/kg	C U	410.000	ug/kg	C U
Benzo(a)anthracene	400.000	ug/kg	C U	430.000	ug/kg	C U	410.000	ug/kg	C U
Benzo(a)pyrene	400.000	ug/kg	C U	430.000	ug/kg	C U	410.000	ug/kg	C U
Benzo(b)fluoranthene	400.000	ug/kg	C U	430.000	ug/kg	C U	410.000	ug/kg	C U
Benzo(g,h,i)perylene	400.000	ug/kg	C U	430.000	ug/kg	C U	410.000	ug/kg	C U
Benzo(k)fluoranthene	400.000	ug/kg	C U	430.000	ug/kg	C U	410.000	ug/kg	C U
Benzoic acid	46.000	ug/kg	C J	2100.000	ug/kg	C UJ	2000.000	ug/kg	C UJ
Benzyl alcohol	400.000	ug/kg	C U	430.000	ug/kg	C U	410.000	ug/kg	C U
Butyl benzyl phthalate	400.000	ug/kg	C U	430.000	ug/kg	C U	410.000	ug/kg	C U
Carbazole	400.000	ug/kg	C U	430.000	ug/kg	C U	410.000	ug/kg	C U
Chrysene	400.000	ug/kg	C U	430.000	ug/kg	C U	410.000	ug/kg	C U
Di-n-butyl phthalate	400.000	ug/kg	C U	430.000	ug/kg	C U	410.000	ug/kg	C U
Di-n-octyl phthalate	400.000	ug/kg	C UJ	430.000	ug/kg	C UJ	410.000	ug/kg	C U
Dibenzo(a,h)anthracene	400.000	ug/kg	C U	430.000	ug/kg	C U	410.000	ug/kg	C U
Dibenzofuran	400.000	ug/kg	C U	430.000	ug/kg	C U	410.000	ug/kg	C U
Diethyl phthalate	400.000	ug/kg	C U	430.000	ug/kg	C U	410.000	ug/kg	C U
Dimethyl phthalate	400.000	ug/kg	C U	430.000	ug/kg	C U	410.000	ug/kg	C U
Fluoranthene	400.000	ug/kg	C U	430.000	ug/kg	C U	410.000	ug/kg	C U
Fluorene	400.000	ug/kg	C U	430.000	ug/kg	C U	410.000	ug/kg	C U
Hexachlorobenzene	400.000	ug/kg	C U	430.000	ug/kg	C U	410.000	ug/kg	C U
Hexachlorobutadiene	400.000	ug/kg	C U	430.000	ug/kg	C U	410.000	ug/kg	C U
Hexachlorocyclopentadiene	400.000	ug/kg	C U	430.000	ug/kg	C U	410.000	ug/kg	C U
Hexachloroethane	400.000	ug/kg	C U	430.000	ug/kg	C U	410.000	ug/kg	C U
Indeno(1,2,3-cd)pyrene	400.000	ug/kg	C U	430.000	ug/kg	C U	410.000	ug/kg	C U
Isophorone	400.000	ug/kg	C U	430.000	ug/kg	C U	410.000	ug/kg	C U
N-Nitroso-di-n-propylamine	400.000	ug/kg	C U	430.000	ug/kg	C U	410.000	ug/kg	C U
N-Nitrosodimethylamine	NA			NA			410.000	ug/kg	C U
N-Nitrosodiphenylamine	400.000	ug/kg	C U	430.000	ug/kg	C U	410.000	ug/kg	C U
Naphthalene	400.000	ug/kg	C U	430.000	ug/kg	C U	410.000	ug/kg	C U
Nitrobenzene	400.000	ug/kg	C U	430.000	ug/kg	C U	410.000	ug/kg	C U
Pentachlorophenol	2000.000	ug/kg	C U	2100.000	ug/kg	C U	1000.000	ug/kg	C U

0725
5174

TABLE F-6A
(Continued)

PHASE II - CHEMICAL PARAMETERS

BORING NUMBER	1970			1970			1971		
SAMPLE NUMBER	112690			112893			110327		
	4-5.5			9-10.5			0.5-1		
SAMPLING DATE	04/18/93			04/18/93			03/22/93		
CHEMICAL PARAMETERS	RESULTS	UNITS	L VQ	RESULTS	UNITS	L VQ	RESULTS	UNITS	L VQ
Semivolatile Organics									
Phenanthrene	400.000	ug/kg	C U	430.000	ug/kg	C U	410.000	ug/kg	C U
Phenol	400.000	ug/kg	C U	430.000	ug/kg	C U	410.000	ug/kg	C U
Pyrene	400.000	ug/kg	C U	430.000	ug/kg	C U	410.000	ug/kg	C U
Tributyl phosphate	NA			NA			410.000	ug/kg	C U
bis(2-Chloroethoxy)methane	400.000	ug/kg	C U	430.000	ug/kg	C U	410.000	ug/kg	C U
bis(2-Chloroethyl)ether	400.000	ug/kg	C U	430.000	ug/kg	C U	410.000	ug/kg	C U
bis(2-Chloroisopropyl) ether	400.000	ug/kg	C U	430.000	ug/kg	C U	410.000	ug/kg	C U
bis(2-Ethylhexyl) phthalate	56.000	ug/kg	C J	430.000	ug/kg	C U	100.000	ug/kg	C J
p-Chloroaniline	400.000	ug/kg	C U	430.000	ug/kg	C U	410.000	ug/kg	C U
Pesticide Organics/PCBs									
4,4'-DDD	4.100	ug/kg	C U	4.300	ug/kg	C U	4.100	ug/kg	C U
4,4'-DDE	4.100	ug/kg	C U	4.300	ug/kg	C U	4.100	ug/kg	C U
4,4'-DDT	4.100	ug/kg	C U	4.300	ug/kg	C U	4.100	ug/kg	C U
Aldrin	2.100	ug/kg	C U	2.200	ug/kg	C U	2.100	ug/kg	C U
Aroclor-1016	41.000	ug/kg	C U	43.000	ug/kg	C U	41.000	ug/kg	C U
Aroclor-1221	82.000	ug/kg	C U	88.000	ug/kg	C U	84.000	ug/kg	C U
Aroclor-1232	41.000	ug/kg	C U	43.000	ug/kg	C U	41.000	ug/kg	C U
Aroclor-1242	41.000	ug/kg	C U	43.000	ug/kg	C U	41.000	ug/kg	C U
Aroclor-1248	41.000	ug/kg	C U	43.000	ug/kg	C U	41.000	ug/kg	C U
Aroclor-1254	41.000	ug/kg	C U	43.000	ug/kg	C U	41.000	ug/kg	C U
Aroclor-1260	41.000	ug/kg	C U	43.000	ug/kg	C U	41.000	ug/kg	C U
Dieldrin	4.100	ug/kg	C U	4.300	ug/kg	C U	4.100	ug/kg	C U
Endosulfan II	4.100	ug/kg	C U	4.300	ug/kg	C U	4.100	ug/kg	C U
Endosulfan sulfate	4.100	ug/kg	C U	4.300	ug/kg	C U	4.100	ug/kg	C U
Endosulfan-I	2.100	ug/kg	C U	2.200	ug/kg	C U	2.100	ug/kg	C U
Endrin	4.100	ug/kg	C U	4.300	ug/kg	C U	4.100	ug/kg	C U
Endrin aldehyde	4.100	ug/kg	C U	4.300	ug/kg	C U	4.100	ug/kg	C U
Endrin ketone	4.100	ug/kg	C U	4.300	ug/kg	C U	4.100	ug/kg	C U
Heptachlor	2.100	ug/kg	C U	2.200	ug/kg	C U	2.100	ug/kg	C U
Heptachlor epoxide	2.100	ug/kg	C U	2.200	ug/kg	C U	2.100	ug/kg	C U
Methoxychlor	21.000	ug/kg	C U	22.000	ug/kg	C U	21.000	ug/kg	C U
Toxaphene	210.000	ug/kg	C U	220.000	ug/kg	C U	210.000	ug/kg	C U
alpha-BHC	2.100	ug/kg	C U	2.200	ug/kg	C U	2.100	ug/kg	C U
alpha-Chlordane	2.100	ug/kg	C U	2.200	ug/kg	C U	2.100	ug/kg	C U
beta-BHC	2.100	ug/kg	C U	2.200	ug/kg	C U	2.100	ug/kg	C U
delta-BHC	2.100	ug/kg	C U	2.200	ug/kg	C U	2.100	ug/kg	C U
gamma-BHC (Lindane)	2.100	ug/kg	C U	2.200	ug/kg	C U	2.100	ug/kg	C U
gamma-Chlordane	2.100	ug/kg	C U	2.200	ug/kg	C U	2.100	ug/kg	C U

5124
0726

TABLE F-6A
(Continued)

PHASE II - CHEMICAL PARAMETERS

BORING NUMBER	1971	1971	1972
SAMPLE NUMBER	112536	112593	110382
	4.5-6.5	9.5-11	0.5-1
SAMPLING DATE	04/15/93	04/15/93	03/19/93

CHEMICAL PARAMETERS	RESULTS	UNITS	L	VQ	RESULTS	UNITS	L	VQ	RESULTS	UNITS	L	VQ
Inorganics												
Aluminum	15600.000	mg/kg	C	-	12200.000	mg/kg	C	-	7800.000	mg/kg	C	-
Antimony	1.200	mg/kg	C	U	1.000	mg/kg	C	U	1.100	mg/kg	C	UJ
Arsenic	8.900	mg/kg	C	-	5.600	mg/kg	C	-	14.100	mg/kg	C	-
Barium	81.500	mg/kg	C	-	72.900	mg/kg	C	-	60.000	mg/kg	C	-
Beryllium	0.920	mg/kg	C	-	0.650	mg/kg	C	-	0.460	mg/kg	C	-
Cadmium	1.200	mg/kg	C	U	1.000	mg/kg	C	U	1.100	mg/kg	C	U
Calcium	77500.000	mg/kg	C	-	130000.000	mg/kg	C	-	104000.000	mg/kg	C	-
Chromium	17.500	mg/kg	C	-	13.800	mg/kg	C	-	13.300	mg/kg	C	-
Cobalt	13.100	mg/kg	C	-	11.000	mg/kg	C	-	7.400	mg/kg	C	-
Copper	25.000	mg/kg	C	-	19.700	mg/kg	C	-	18.100	mg/kg	C	-
Cyanide	0.130	mg/kg	C	U	0.780	mg/kg	C	-	0.170	mg/kg	C	-
Iron	30100.000	mg/kg	C	-	22200.000	mg/kg	C	-	14600.000	mg/kg	C	-
Lead	12.600	mg/kg	C	-	10.300	mg/kg	C	-	44.100	mg/kg	C	-
Magnesium	25100.000	mg/kg	C	-	21300.000	mg/kg	C	-	32600.000	mg/kg	C	-
Manganese	724.000	mg/kg	C	-	488.000	mg/kg	C	-	766.000	mg/kg	C	-
Mercury	0.120	mg/kg	C	U	0.120	mg/kg	C	U	0.140	mg/kg	C	J
Molybdenum	8.900	mg/kg	C	-	7.500	mg/kg	C	-	4.500	mg/kg	C	U
Nickel	33.500	mg/kg	C	-	24.800	mg/kg	C	-	13.800	mg/kg	C	-
Potassium	2480.000	mg/kg	C	-	2590.000	mg/kg	C	-	1070.000	mg/kg	C	-
Selenium	0.470	mg/kg	C	U	0.450	mg/kg	C	U	0.450	mg/kg	C	U
Silicon	862.000	mg/kg	C	-	734.000	mg/kg	C	-	685.000	mg/kg	C	J
Silver	9.200	mg/kg	C	-	6.400	mg/kg	C	-	3.400	mg/kg	C	J
Sodium	124.000	mg/kg	C	-	117.000	mg/kg	C	-	133.000	mg/kg	C	-
Thallium	0.470	mg/kg	C	U	0.450	mg/kg	C	U	0.450	mg/kg	C	U
Vanadium	35.600	mg/kg	C	-	24.800	mg/kg	C	-	21.100	mg/kg	C	-
Zinc	69.700	mg/kg	C	-	57.800	mg/kg	C	-	41.500	mg/kg	C	-
Volatile Organics												
1,1,1-Trichloroethane	12.000	ug/kg	C	U	12.000	ug/kg	C	U	12.000	ug/kg	C	U
1,1,2,2-Tetrachloroethane	12.000	ug/kg	C	U	12.000	ug/kg	C	U	12.000	ug/kg	C	U
1,1,2-Trichloroethane	12.000	ug/kg	C	U	12.000	ug/kg	C	U	12.000	ug/kg	C	U
1,1-Dichloroethane	12.000	ug/kg	C	U	12.000	ug/kg	C	U	12.000	ug/kg	C	U
1,1-Dichloroethene	12.000	ug/kg	C	U	12.000	ug/kg	C	U	12.000	ug/kg	C	U
1,2-Dichloroethane	12.000	ug/kg	C	U	12.000	ug/kg	C	U	12.000	ug/kg	C	U
1,2-Dichloroethene	12.000	ug/kg	C	U	12.000	ug/kg	C	U	12.000	ug/kg	C	U
1,2-Dichloropropane	12.000	ug/kg	C	U	12.000	ug/kg	C	U	12.000	ug/kg	C	U
2-Butanone	12.000	ug/kg	C	U	12.000	ug/kg	C	U	12.000	ug/kg	C	U
2-Hexanone	12.000	ug/kg	C	UJ	12.000	ug/kg	C	UJ	12.000	ug/kg	C	U
4-Methyl-2-pentanone	12.000	ug/kg	C	UJ	12.000	ug/kg	C	UJ	12.000	ug/kg	C	U
Acetone	12.000	ug/kg	C	U	3.000	ug/kg	C	J	12.000	ug/kg	C	UJ
Benzene	12.000	ug/kg	C	U	12.000	ug/kg	C	U	12.000	ug/kg	C	U

0727

TABLE F-6A
(Continued)

PHASE II - CHEMICAL PARAMETERS

BORING NUMBER	1971			1971			1972		
SAMPLE NUMBER	112536			112593			110382		
	4.5-6.5			9.5-11			0.5-1		
SAMPLING DATE	04/15/93			04/15/93			03/19/93		
CHEMICAL PARAMETERS	RESULTS	UNITS	L VQ	RESULTS	UNITS	L VQ	RESULTS	UNITS	L VQ
Volatile Organics									
Bromodichloromethane	12.000	ug/kg	C U	12.000	ug/kg	C U	12.000	ug/kg	C U
Bromoform	12.000	ug/kg	C U	12.000	ug/kg	C U	12.000	ug/kg	C U
Bromomethane	12.000	ug/kg	C UJ	12.000	ug/kg	C UJ	12.000	ug/kg	C U
Carbon Tetrachloride	12.000	ug/kg	C U	12.000	ug/kg	C U	12.000	ug/kg	C U
Carbon disulfide	12.000	ug/kg	C U	12.000	ug/kg	C U	12.000	ug/kg	C U
Chlorobenzene	12.000	ug/kg	C U	12.000	ug/kg	C U	12.000	ug/kg	C U
Chloroethane	12.000	ug/kg	C UJ	12.000	ug/kg	C UJ	12.000	ug/kg	C U
Chloroform	12.000	ug/kg	C U	12.000	ug/kg	C U	12.000	ug/kg	C U
Chloromethane	12.000	ug/kg	C U	12.000	ug/kg	C U	12.000	ug/kg	C R
Dibromochloromethane	12.000	ug/kg	C U	12.000	ug/kg	C U	12.000	ug/kg	C U
Ethylbenzene	12.000	ug/kg	C U	12.000	ug/kg	C U	12.000	ug/kg	C U
Methylene chloride	15.000	ug/kg	C U	14.000	ug/kg	C U	12.000	ug/kg	C UJ
Styrene	12.000	ug/kg	C U	12.000	ug/kg	C U	12.000	ug/kg	C U
Tetrachloroethene	12.000	ug/kg	C U	12.000	ug/kg	C U	12.000	ug/kg	C U
Toluene	12.000	ug/kg	C U	3.000	ug/kg	C J	12.000	ug/kg	C U
Trichloroethene	12.000	ug/kg	C U	12.000	ug/kg	C U	12.000	ug/kg	C U
Vinyl Acetate	12.000	ug/kg	C UJ	12.000	ug/kg	C UJ	12.000	ug/kg	C UJ
Vinyl chloride	12.000	ug/kg	C U	12.000	ug/kg	C U	12.000	ug/kg	C U
Xylenes, Total	12.000	ug/kg	C U	12.000	ug/kg	C U	12.000	ug/kg	C U
cis-1,3-Dichloropropene	12.000	ug/kg	C U	12.000	ug/kg	C U	12.000	ug/kg	C U
trans-1,3-Dichloropropene	12.000	ug/kg	C U	12.000	ug/kg	C U	12.000	ug/kg	C U
Semivolatile Organics									
1,2,4-Trichlorobenzene	420.000	ug/kg	C U	410.000	ug/kg	C U	400.000	ug/kg	C U
1,2-Dichlorobenzene	420.000	ug/kg	C U	410.000	ug/kg	C U	400.000	ug/kg	C U
1,3-Dichlorobenzene	420.000	ug/kg	C U	410.000	ug/kg	C U	400.000	ug/kg	C U
1,4-Dichlorobenzene	420.000	ug/kg	C U	410.000	ug/kg	C U	400.000	ug/kg	C U
2,4,5-Trichlorophenol	1000.000	ug/kg	C UJ	990.000	ug/kg	C U	960.000	ug/kg	C U
2,4,6-Trichlorophenol	420.000	ug/kg	C UJ	410.000	ug/kg	C U	400.000	ug/kg	C U
2,4-Dichlorophenol	420.000	ug/kg	C U	410.000	ug/kg	C U	400.000	ug/kg	C U
2,4-Dimethylphenol	420.000	ug/kg	C U	410.000	ug/kg	C U	400.000	ug/kg	C U
2,4-Dinitrophenol	1000.000	ug/kg	C UJ	990.000	ug/kg	C UJ	1900.000	ug/kg	C R
2,4-Dinitrotqluene	420.000	ug/kg	C U	410.000	ug/kg	C U	400.000	ug/kg	C UJ
2,6-Dinitrotoluene	420.000	ug/kg	C UJ	410.000	ug/kg	C U	400.000	ug/kg	C UJ
2-Chloronaphthalene	420.000	ug/kg	C UJ	410.000	ug/kg	C U	400.000	ug/kg	C U
2-Chlorophenol	420.000	ug/kg	C U	410.000	ug/kg	C U	400.000	ug/kg	C U
2-Methylnaphthalene	420.000	ug/kg	C U	410.000	ug/kg	C U	400.000	ug/kg	C U
2-Methylphenol	420.000	ug/kg	C U	410.000	ug/kg	C U	400.000	ug/kg	C U
2-Nitroaniline	1000.000	ug/kg	C UJ	990.000	ug/kg	C U	960.000	ug/kg	C U
2-Nitrophenol	420.000	ug/kg	C U	410.000	ug/kg	C U	400.000	ug/kg	C U
3,3'-Dichlorobenzidine	420.000	ug/kg	C U	410.000	ug/kg	C U	400.000	ug/kg	C U

TABLE F-6A
(Continued)

PHASE II - CHEMICAL PARAMETERS

BORING NUMBER	1971			1971			1972		
SAMPLE NUMBER	112536			112593			110382		
	4.5-6.5			9.5-11			0.5-1		
SAMPLING DATE	04/15/93			04/15/93			03/19/93		
CHEMICAL PARAMETERS	RESULTS	UNITS	L VQ	RESULTS	UNITS	L VQ	RESULTS	UNITS	L VQ
Semivolatile Organics									
3-Nitroaniline	1000.000	ug/kg	C U	990.000	ug/kg	C U	960.000	ug/kg	C U
4,6-Dinitro-2-methylphenol	1000.000	ug/kg	C R	990.000	ug/kg	C R	960.000	ug/kg	C R
4-Bromophenyl phenyl ether	420.000	ug/kg	C UJ	410.000	ug/kg	C UJ	400.000	ug/kg	C U
4-Chloro-3-methylphenol	420.000	ug/kg	C U	410.000	ug/kg	C U	400.000	ug/kg	C U
4-Chlorophenylphenyl ether	420.000	ug/kg	C U	410.000	ug/kg	C U	400.000	ug/kg	C U
4-Methylphenol	420.000	ug/kg	C U	410.000	ug/kg	C U	400.000	ug/kg	C U
4-Nitroaniline	1000.000	ug/kg	C R	990.000	ug/kg	C R	960.000	ug/kg	C U
4-Nitrophenol	1000.000	ug/kg	C U	990.000	ug/kg	C U	960.000	ug/kg	C R
Acenaphthene	420.000	ug/kg	C U	410.000	ug/kg	C U	400.000	ug/kg	C U
Acenaphthylene	420.000	ug/kg	C UJ	410.000	ug/kg	C U	410.000	ug/kg	C -
Anthracene	420.000	ug/kg	C U	410.000	ug/kg	C U	250.000	ug/kg	C J
Benzo(a)anthracene	420.000	ug/kg	C U	410.000	ug/kg	C U	1100.000	ug/kg	C -
Benzo(a)pyrene	420.000	ug/kg	C U	410.000	ug/kg	C U	1800.000	ug/kg	C -
Benzo(b)fluoranthene	420.000	ug/kg	C U	410.000	ug/kg	C U	1600.000	ug/kg	C -
Benzo(g,h,i)perylene	420.000	ug/kg	C UJ	410.000	ug/kg	C UJ	1200.000	ug/kg	C -
Benzo(k)fluoranthene	420.000	ug/kg	C U	410.000	ug/kg	C U	1600.000	ug/kg	C -
Benzoic acid	2000.000	ug/kg	C UJ	2000.000	ug/kg	C UJ	1900.000	ug/kg	C R
Benzyl alcohol	420.000	ug/kg	C U	410.000	ug/kg	C U	400.000	ug/kg	C R
Butyl benzyl phthalate	420.000	ug/kg	C U	410.000	ug/kg	C U	400.000	ug/kg	C U
Carbazole	420.000	ug/kg	C U	410.000	ug/kg	C U	51.000	ug/kg	C J
Chrysene	420.000	ug/kg	C U	410.000	ug/kg	C U	1400.000	ug/kg	C -
Di-n-butyl phthalate	420.000	ug/kg	C U	410.000	ug/kg	C U	400.000	ug/kg	C U
Di-n-octyl phthalate	420.000	ug/kg	C U	410.000	ug/kg	C U	400.000	ug/kg	C UJ
Dibenzo(a,h)anthracene	420.000	ug/kg	C U	410.000	ug/kg	C U	440.000	ug/kg	C -
Dibenzofuran	420.000	ug/kg	C U	410.000	ug/kg	C U	400.000	ug/kg	C U
Diethyl phthalate	420.000	ug/kg	C U	410.000	ug/kg	C U	400.000	ug/kg	C U
Dimethyl phthalate	420.000	ug/kg	C UJ	410.000	ug/kg	C U	400.000	ug/kg	C U
Fluoranthene	420.000	ug/kg	C U	410.000	ug/kg	C U	1800.000	ug/kg	C -
Fluorene	420.000	ug/kg	C U	410.000	ug/kg	C U	400.000	ug/kg	C U
Hexachlorobenzene	420.000	ug/kg	C U	410.000	ug/kg	C U	400.000	ug/kg	C U
Hexachlorobutadiene	420.000	ug/kg	C U	410.000	ug/kg	C U	400.000	ug/kg	C U
Hexachlorocyclopentadiene	420.000	ug/kg	C UJ	410.000	ug/kg	C UJ	400.000	ug/kg	C UJ
Hexachloroethane	420.000	ug/kg	C U	410.000	ug/kg	C U	400.000	ug/kg	C U
Indeno(1,2,3-cd)pyrene	420.000	ug/kg	C U	410.000	ug/kg	C U	210.000	ug/kg	C J
Isophorone	420.000	ug/kg	C U	410.000	ug/kg	C U	400.000	ug/kg	C U
N-Nitroso-di-n-propylamine	420.000	ug/kg	C UJ	410.000	ug/kg	C UJ	400.000	ug/kg	C U
N-Nitrosodiphenylamine	420.000	ug/kg	C U	410.000	ug/kg	C U	400.000	ug/kg	C U
Naphthalene	420.000	ug/kg	C U	410.000	ug/kg	C U	400.000	ug/kg	C U
Nitrobenzene	420.000	ug/kg	C U	410.000	ug/kg	C U	400.000	ug/kg	C U
Pentachlorophenol	1000.000	ug/kg	C UJ	990.000	ug/kg	C UJ	960.000	ug/kg	C UJ
Phenanthrene	420.000	ug/kg	C U	410.000	ug/kg	C U	350.000	ug/kg	C J
Phenol	420.000	ug/kg	C U	410.000	ug/kg	C U	400.000	ug/kg	C U

0729

5174

TABLE F-6A
(Continued)

PHASE II - CHEMICAL PARAMETERS

BORING NUMBER	1971			1971			1972		
SAMPLE NUMBER	112536			112593			110382		
	4.5-6.5			9.5-11			0.5-1		
SAMPLING DATE	04/15/93			04/15/93			03/19/93		
CHEMICAL PARAMETERS	RESULTS	UNITS	L VQ	RESULTS	UNITS	L VQ	RESULTS	UNITS	L VQ
Semivolatile Organics									
Pyrene	420.000	ug/kg	C U	410.000	ug/kg	C U	1400.000	ug/kg	C -
bis(2-Chloroethoxy)methane	420.000	ug/kg	C U	410.000	ug/kg	C U	400.000	ug/kg	C U
bis(2-Chloroethyl)ether	420.000	ug/kg	C U	410.000	ug/kg	C U	400.000	ug/kg	C U
bis(2-Chloroisopropyl) ether	420.000	ug/kg	C UJ	410.000	ug/kg	C UJ	400.000	ug/kg	C UJ
bis(2-Ethylhexyl) phthalate	420.000	ug/kg	C U	410.000	ug/kg	C U	87.000	ug/kg	C J
p-Chloroaniline	420.000	ug/kg	C U	410.000	ug/kg	C U	400.000	ug/kg	C U
Pesticide Organics/PCBs									
4,4'-DDD	4.200	ug/kg	C U	4.100	ug/kg	C U	4.000	ug/kg	C U
4,4'-DDE	4.200	ug/kg	C U	4.100	ug/kg	C U	4.000	ug/kg	C U
4,4'-DDT	4.200	ug/kg	C U	4.100	ug/kg	C U	4.000	ug/kg	C U
Aldrin	2.200	ug/kg	C U	2.100	ug/kg	C U	2.100	ug/kg	C U
Aroclor-1016	42.000	ug/kg	C U	41.000	ug/kg	C U	40.000	ug/kg	C U
Aroclor-1221	85.000	ug/kg	C U	83.000	ug/kg	C U	81.000	ug/kg	C U
Aroclor-1232	42.000	ug/kg	C U	41.000	ug/kg	C U	40.000	ug/kg	C U
Aroclor-1242	42.000	ug/kg	C U	41.000	ug/kg	C U	40.000	ug/kg	C U
Aroclor-1248	42.000	ug/kg	C U	41.000	ug/kg	C U	40.000	ug/kg	C U
Aroclor-1254	42.000	ug/kg	C U	41.000	ug/kg	C U	85.000	ug/kg	C -
Aroclor-1260	42.000	ug/kg	C U	41.000	ug/kg	C U	40.000	ug/kg	C U
Dieldrin	4.200	ug/kg	C U	4.100	ug/kg	C U	4.000	ug/kg	C U
Endosulfan II	4.200	ug/kg	C U	4.100	ug/kg	C U	4.000	ug/kg	C U
Endosulfan sulfate	4.200	ug/kg	C U	4.100	ug/kg	C U	4.000	ug/kg	C U
Endosulfan-I	2.200	ug/kg	C U	2.100	ug/kg	C U	2.100	ug/kg	C U
Endrin	4.200	ug/kg	C U	4.100	ug/kg	C U	4.000	ug/kg	C U
Endrin aldehyde	4.200	ug/kg	C U	4.100	ug/kg	C U	4.000	ug/kg	C U
Endrin ketone	4.200	ug/kg	C U	4.100	ug/kg	C U	4.000	ug/kg	C U
Heptachlor	2.200	ug/kg	C U	2.100	ug/kg	C U	2.100	ug/kg	C U
Heptachlor epoxide	2.200	ug/kg	C U	2.100	ug/kg	C U	2.100	ug/kg	C U
Methoxychlor	22.000	ug/kg	C U	21.000	ug/kg	C U	21.000	ug/kg	C U
Toxaphene	220.000	ug/kg	C U	210.000	ug/kg	C U	210.000	ug/kg	C U
alpha-BHC	2.200	ug/kg	C U	2.100	ug/kg	C U	2.100	ug/kg	C U
alpha-Chlordane	2.200	ug/kg	C U	2.100	ug/kg	C U	2.100	ug/kg	C U
beta-BHC	2.200	ug/kg	C U	2.100	ug/kg	C U	2.100	ug/kg	C U
delta-BHC	2.200	ug/kg	C U	2.100	ug/kg	C U	2.100	ug/kg	C U
gamma-BHC (Lindane)	2.200	ug/kg	C U	2.100	ug/kg	C U	2.100	ug/kg	C U
gamma-Chlordane	2.200	ug/kg	C U	2.100	ug/kg	C U	2.100	ug/kg	C U

TABLE F-6A
(Continued)

PHASE II - CHEMICAL PARAMETERS

BORING NUMBER	1972			1972			1975		
SAMPLE NUMBER	110584			112494			110389		
	2.5-4			7.5-9			0.5-1		
SAMPLING DATE	04/08/93			04/08/93			03/22/93		
CHEMICAL PARAMETERS	RESULTS	UNITS	L VQ	RESULTS	UNITS	L VQ	RESULTS	UNITS	L VQ
Inorganics									
Aluminum	20000.000	mg/kg	C -	6560.000	mg/kg	C -	6740.000	mg/kg	C -
Antimony	1.100	mg/kg	C UJ	0.870	mg/kg	C UJ	0.950	mg/kg	C R
Arsenic	10.200	mg/kg	C J	4.000	mg/kg	C -	5.500	mg/kg	C -
Barium	53.400	mg/kg	C -	41.000	mg/kg	C -	55.600	mg/kg	C -
Beryllium	0.600	mg/kg	C -	1.700	mg/kg	C U	0.510	mg/kg	C -
Cadmium	1.100	mg/kg	C U	4.400	mg/kg	C U	0.950	mg/kg	C U
Calcium	1620.000	mg/kg	C -	115000.000	mg/kg	C -	50600.000	mg/kg	C -
Chromium	20.400	mg/kg	C -	9.000	mg/kg	C -	8.100	mg/kg	C -
Cobalt	5.600	mg/kg	C -	8.700	mg/kg	C U	4.700	mg/kg	C -
Copper	23.900	mg/kg	C -	12.100	mg/kg	C -	11.400	mg/kg	C -
Cyanide	0.120	mg/kg	C U	0.120	mg/kg	C U	0.160	mg/kg	C -
Iron	29600.000	mg/kg	C -	13800.000	mg/kg	C -	14100.000	mg/kg	C -
Lead	11.800	mg/kg	C J	3.300	mg/kg	C J	18.700	mg/kg	C J
Magnesium	3410.000	mg/kg	C -	35200.000	mg/kg	C -	13200.000	mg/kg	C J
Manganese	186.000	mg/kg	C J	311.000	mg/kg	C J	428.000	mg/kg	C -
Mercury	0.110	mg/kg	C U	0.110	mg/kg	C U	0.120	mg/kg	C U
Molybdenum	8.600	mg/kg	C -	17.500	mg/kg	C U	4.000	mg/kg	C -
Nickel	21.800	mg/kg	C -	17.500	mg/kg	C U	11.800	mg/kg	C -
Potassium	1510.000	mg/kg	C -	1100.000	mg/kg	C -	809.000	mg/kg	C -
Selenium	0.470	mg/kg	C U	0.410	mg/kg	C U	0.460	mg/kg	C UJ
Silicon	766.000	mg/kg	C J	1010.000	mg/kg	C J	506.000	mg/kg	C J
Silver	9.000	mg/kg	C -	8.700	mg/kg	C U	4.100	mg/kg	C -
Sodium	67.600	mg/kg	C -	294.000	mg/kg	C -	88.000	mg/kg	C -
Thallium	0.470	mg/kg	C U	0.410	mg/kg	C U	0.460	mg/kg	C U
Vanadium	47.500	mg/kg	C -	18.700	mg/kg	C -	19.500	mg/kg	C -
Zinc	65.200	mg/kg	C -	60.200	mg/kg	C -	34.200	mg/kg	C -
Volatile Organics									
1,1,1-Trichloroethane	12.000	ug/kg	C U	12.000	ug/kg	C U	6.000	ug/kg	C U
1,1,2,2-Tetrachloroethane	12.000	ug/kg	C U	12.000	ug/kg	C U	6.000	ug/kg	C U
1,1,2-Trichloroethane	12.000	ug/kg	C U	12.000	ug/kg	C U	6.000	ug/kg	C U
1,1-Dichloroethane	12.000	ug/kg	C U	12.000	ug/kg	C U	6.000	ug/kg	C UJ
1,1-Dichloroethene	12.000	ug/kg	C U	12.000	ug/kg	C U	6.000	ug/kg	C U
1,2-Dichloroethane	12.000	ug/kg	C U	12.000	ug/kg	C U	6.000	ug/kg	C U
1,2-Dichloroethene	12.000	ug/kg	C U	12.000	ug/kg	C U	6.000	ug/kg	C U
1,2-Dichloropropane	12.000	ug/kg	C U	12.000	ug/kg	C U	6.000	ug/kg	C U
2-Butanone	12.000	ug/kg	C U	12.000	ug/kg	C U	12.000	ug/kg	C UJ
2-Hexanone	12.000	ug/kg	C U	12.000	ug/kg	C U	12.000	ug/kg	C U
4-Methyl-2-pentanone	12.000	ug/kg	C U	12.000	ug/kg	C U	12.000	ug/kg	C U
Acetone	6.000	ug/kg	C J	3.000	ug/kg	C J	12.000	ug/kg	C U
Benzene	12.000	ug/kg	C U	12.000	ug/kg	C U	6.000	ug/kg	C U

0734
5174

TABLE F-6A
(Continued)

PHASE II - CHEMICAL PARAMETERS

BORING NUMBER	1972	1972	1975
SAMPLE NUMBER	110584	112494	110389
	2.5-4	7.5-9	0.5-1
SAMPLING DATE	04/08/93	04/08/93	03/22/93

CHEMICAL PARAMETERS	RESULTS	UNITS	L	VQ	RESULTS	UNITS	L	VQ	RESULTS	UNITS	L	VQ
Volatile Organics												
Bromodichloromethane	12.000	ug/kg	C	U	12.000	ug/kg	C	U	6.000	ug/kg	C	U
Bromoform	12.000	ug/kg	C	U	12.000	ug/kg	C	U	6.000	ug/kg	C	U
Bromomethane	12.000	ug/kg	C	U	12.000	ug/kg	C	U	12.000	ug/kg	C	UJ
Carbon Tetrachloride	12.000	ug/kg	C	U	12.000	ug/kg	C	U	6.000	ug/kg	C	U
Carbon disulfide	12.000	ug/kg	C	U	12.000	ug/kg	C	U	6.000	ug/kg	C	U
Chlorobenzene	12.000	ug/kg	C	U	12.000	ug/kg	C	U	6.000	ug/kg	C	U
Chloroethane	12.000	ug/kg	C	U	12.000	ug/kg	C	U	12.000	ug/kg	C	UJ
Chloroform	12.000	ug/kg	C	U	12.000	ug/kg	C	U	6.000	ug/kg	C	U
Chloromethane	12.000	ug/kg	C	U	12.000	ug/kg	C	U	12.000	ug/kg	C	U
Dibromochloromethane	12.000	ug/kg	C	U	12.000	ug/kg	C	U	6.000	ug/kg	C	U
Ethylbenzene	12.000	ug/kg	C	U	12.000	ug/kg	C	U	6.000	ug/kg	C	U
Methylene chloride	12.000	ug/kg	C	U	12.000	ug/kg	C	U	6.000	ug/kg	C	UJ
Styrene	12.000	ug/kg	C	U	12.000	ug/kg	C	U	6.000	ug/kg	C	U
Tetrachloroethene	12.000	ug/kg	C	U	12.000	ug/kg	C	U	6.000	ug/kg	C	U
Toluene	11.000	ug/kg	C	J	12.000	ug/kg	C	U	6.000	ug/kg	C	U
Trichloroethene	12.000	ug/kg	C	U	12.000	ug/kg	C	U	6.000	ug/kg	C	U
Vinyl Acetate	12.000	ug/kg	C	U	12.000	ug/kg	C	U	12.000	ug/kg	C	U
Vinyl chloride	12.000	ug/kg	C	U	12.000	ug/kg	C	U	12.000	ug/kg	C	U
Xylenes, Total	12.000	ug/kg	C	U	12.000	ug/kg	C	U	6.000	ug/kg	C	U
cis-1,3-Dichloropropene	12.000	ug/kg	C	U	12.000	ug/kg	C	U	6.000	ug/kg	C	U
trans-1,3-Dichloropropene	12.000	ug/kg	C	U	12.000	ug/kg	C	U	6.000	ug/kg	C	U
Semivolatile Organics												
1,2,4-Trichlorobenzene	390.000	ug/kg	C	U	410.000	ug/kg	C	U	410.000	ug/kg	C	U
1,2-Dichlorobenzene	390.000	ug/kg	C	U	410.000	ug/kg	C	U	410.000	ug/kg	C	U
1,2-Diphenylhydrazine	NA				NA				410.000	ug/kg	C	U
1,3-Dichlorobenzene	390.000	ug/kg	C	U	410.000	ug/kg	C	U	410.000	ug/kg	C	U
1,4-Dichlorobenzene	390.000	ug/kg	C	U	410.000	ug/kg	C	U	410.000	ug/kg	C	U
2,4,5-Trichlorophenol	950.000	ug/kg	C	U	980.000	ug/kg	C	U	990.000	ug/kg	C	U
2,4,6-Trichlorophenol	390.000	ug/kg	C	U	410.000	ug/kg	C	U	410.000	ug/kg	C	U
2,4-Dichlorophenol	390.000	ug/kg	C	U	410.000	ug/kg	C	U	410.000	ug/kg	C	U
2,4-Dimethylphenol	390.000	ug/kg	C	U	410.000	ug/kg	C	U	410.000	ug/kg	C	U
2,4-Dinitrophenol	950.000	ug/kg	C	U	980.000	ug/kg	C	U	2000.000	ug/kg	C	UJ
2,4-Dinitrotoluene	390.000	ug/kg	C	U	410.000	ug/kg	C	U	410.000	ug/kg	C	U
2,6-Dinitrotoluene	390.000	ug/kg	C	U	410.000	ug/kg	C	U	410.000	ug/kg	C	U
2-Chloronaphthalene	390.000	ug/kg	C	U	410.000	ug/kg	C	U	410.000	ug/kg	C	U
2-Chlorophenol	390.000	ug/kg	C	U	410.000	ug/kg	C	U	410.000	ug/kg	C	U
2-Methylnaphthalene	390.000	ug/kg	C	U	410.000	ug/kg	C	U	410.000	ug/kg	C	U
2-Methylphenol	390.000	ug/kg	C	U	410.000	ug/kg	C	U	410.000	ug/kg	C	U
2-Nitroaniline	950.000	ug/kg	C	U	980.000	ug/kg	C	U	990.000	ug/kg	C	U
2-Nitrophenol	390.000	ug/kg	C	U	410.000	ug/kg	C	U	410.000	ug/kg	C	U

TABLE F-6A
(Continued)

PHASE II - CHEMICAL PARAMETERS

BORING NUMBER	1972			1972			1975		
SAMPLE NUMBER	110584			112494			110389		
	2.5-4			7.5-9			0.5-1		
SAMPLING DATE	04/08/93			04/08/93			03/22/93		
CHEMICAL PARAMETERS	RESULTS	UNITS	L VQ	RESULTS	UNITS	L VQ	RESULTS	UNITS	L VQ
Semivolatile Organics									
3,3'-Dichlorobenzidine	390.000	ug/kg	C U	410.000	ug/kg	C U	410.000	ug/kg	C U
3-Nitroaniline	950.000	ug/kg	C U	980.000	ug/kg	C U	990.000	ug/kg	C U
4,6-Dinitro-2-methylphenol	950.000	ug/kg	C U	980.000	ug/kg	C U	990.000	ug/kg	C UJ
4-Bromophenyl phenyl ether	390.000	ug/kg	C U	410.000	ug/kg	C U	410.000	ug/kg	C U
4-Chloro-3-methylphenol	390.000	ug/kg	C U	410.000	ug/kg	C U	410.000	ug/kg	C U
4-Chlorophenylphenyl ether	390.000	ug/kg	C U	410.000	ug/kg	C U	410.000	ug/kg	C U
4-Methylphenol	390.000	ug/kg	C U	410.000	ug/kg	C U	410.000	ug/kg	C U
4-Nitroaniline	950.000	ug/kg	C U	980.000	ug/kg	C U	990.000	ug/kg	C U
4-Nitrophenol	950.000	ug/kg	C U	980.000	ug/kg	C U	990.000	ug/kg	C U
Acenaphthene	390.000	ug/kg	C U	410.000	ug/kg	C U	410.000	ug/kg	C U
Acenaphthylene	390.000	ug/kg	C U	410.000	ug/kg	C U	410.000	ug/kg	C U
Anthracene	390.000	ug/kg	C U	410.000	ug/kg	C U	410.000	ug/kg	C U
Benzo(a)anthracene	390.000	ug/kg	C U	410.000	ug/kg	C U	410.000	ug/kg	C U
Benzo(a)pyrene	390.000	ug/kg	C U	410.000	ug/kg	C U	410.000	ug/kg	C U
Benzo(b)fluoranthene	390.000	ug/kg	C U	410.000	ug/kg	C U	410.000	ug/kg	C U
Benzo(g,h,i)perylene	390.000	ug/kg	C UJ	410.000	ug/kg	C UJ	410.000	ug/kg	C U
Benzo(k)fluoranthene	390.000	ug/kg	C U	410.000	ug/kg	C U	410.000	ug/kg	C U
Benzoic acid	1900.000	ug/kg	C U	2000.000	ug/kg	C U	2000.000	ug/kg	C UJ
Benzyl alcohol	390.000	ug/kg	C U	410.000	ug/kg	C U	410.000	ug/kg	C U
Butyl benzyl phthalate	390.000	ug/kg	C U	410.000	ug/kg	C U	410.000	ug/kg	C U
Carbazole	390.000	ug/kg	C U	410.000	ug/kg	C U	410.000	ug/kg	C U
Chrysene	390.000	ug/kg	C U	410.000	ug/kg	C U	410.000	ug/kg	C U
Di-n-butyl phthalate	390.000	ug/kg	C U	410.000	ug/kg	C U	410.000	ug/kg	C U
Di-n-octyl phthalate	390.000	ug/kg	C U	410.000	ug/kg	C U	410.000	ug/kg	C U
Dibenzo(a,h)anthracene	390.000	ug/kg	C U	410.000	ug/kg	C U	410.000	ug/kg	C U
Dibenzofuran	390.000	ug/kg	C U	410.000	ug/kg	C U	410.000	ug/kg	C U
Diethyl phthalate	390.000	ug/kg	C UJ	410.000	ug/kg	C UJ	410.000	ug/kg	C U
Dimethyl phthalate	390.000	ug/kg	C U	410.000	ug/kg	C U	410.000	ug/kg	C U
Fluoranthene	390.000	ug/kg	C U	410.000	ug/kg	C U	410.000	ug/kg	C U
Fluorene	390.000	ug/kg	C U	410.000	ug/kg	C U	410.000	ug/kg	C U
Hexachlorobenzene	390.000	ug/kg	C U	410.000	ug/kg	C U	410.000	ug/kg	C U
Hexachlorobutadiene	390.000	ug/kg	C U	410.000	ug/kg	C U	410.000	ug/kg	C U
Hexachlorocyclopentadiene	390.000	ug/kg	C U	410.000	ug/kg	C U	410.000	ug/kg	C U
Hexachloroethane	390.000	ug/kg	C U	410.000	ug/kg	C U	410.000	ug/kg	C U
Indeno(1,2,3-cd)pyrene	390.000	ug/kg	C U	410.000	ug/kg	C U	410.000	ug/kg	C U
Isophorone	390.000	ug/kg	C U	410.000	ug/kg	C U	410.000	ug/kg	C U
N-Nitroso-di-n-propylamine	390.000	ug/kg	C U	410.000	ug/kg	C U	410.000	ug/kg	C U
N-Nitrosodimethylamine	NA			NA			410.000	ug/kg	C U
N-Nitrosodiphenylamine	390.000	ug/kg	C U	410.000	ug/kg	C U	410.000	ug/kg	C U
Naphthalene	390.000	ug/kg	C U	410.000	ug/kg	C U	410.000	ug/kg	C U
Nitrobenzene	390.000	ug/kg	C U	410.000	ug/kg	C U	410.000	ug/kg	C U
Pentachlorophenol	950.000	ug/kg	C U	980.000	ug/kg	C U	990.000	ug/kg	C U

0733

0 5174

TABLE F-6A
(Continued)

PHASE II - CHEMICAL PARAMETERS

BORING NUMBER	1972			1972			1975		
SAMPLE NUMBER	110584			112494			110389		
	2.5-4			7.5-9			0.5-1		
SAMPLING DATE	04/08/93			04/08/93			03/22/93		
CHEMICAL PARAMETERS	RESULTS	UNITS	L VQ	RESULTS	UNITS	L VQ	RESULTS	UNITS	L VQ
Semivolatile Organics									
Phenanthrene	390.000	ug/kg	C U	410.000	ug/kg	C U	410.000	ug/kg	C U
Phenol	390.000	ug/kg	C U	410.000	ug/kg	C U	410.000	ug/kg	C U
Pyrene	390.000	ug/kg	C U	410.000	ug/kg	C U	410.000	ug/kg	C U
Tributyl phosphate	NA			NA			410.000	ug/kg	C U
bis(2-Chloroethoxy)methane	390.000	ug/kg	C U	410.000	ug/kg	C U	410.000	ug/kg	C U
bis(2-Chloroethyl)ether	390.000	ug/kg	C U	410.000	ug/kg	C U	410.000	ug/kg	C U
bis(2-Chloroisopropyl) ether	390.000	ug/kg	C U	410.000	ug/kg	C U	410.000	ug/kg	C U
bis(2-Ethylhexyl) phthalate	390.000	ug/kg	C U	410.000	ug/kg	C U	51.000	ug/kg	C J
p-Chloroaniline	390.000	ug/kg	C U	410.000	ug/kg	C U	410.000	ug/kg	C U
Pesticide Organics/PCBs									
4,4'-DDD	4.000	ug/kg	C UJ	4.000	ug/kg	C UJ	4.100	ug/kg	C U
4,4'-DDE	4.000	ug/kg	C U	4.000	ug/kg	C U	4.100	ug/kg	C U
4,4'-DDT	4.000	ug/kg	C U	4.000	ug/kg	C U	4.100	ug/kg	C U
Aldrin	2.000	ug/kg	C U	2.100	ug/kg	C U	2.100	ug/kg	C U
Aroclor-1016	40.000	ug/kg	C U	40.000	ug/kg	C U	41.000	ug/kg	C U
Aroclor-1221	80.000	ug/kg	C U	82.000	ug/kg	C U	83.000	ug/kg	C U
Aroclor-1232	40.000	ug/kg	C U	40.000	ug/kg	C U	41.000	ug/kg	C U
Aroclor-1242	40.000	ug/kg	C U	40.000	ug/kg	C U	41.000	ug/kg	C U
Aroclor-1248	40.000	ug/kg	C U	40.000	ug/kg	C U	41.000	ug/kg	C U
Aroclor-1254	40.000	ug/kg	C U	40.000	ug/kg	C U	140.000	ug/kg	C -
Aroclor-1260	40.000	ug/kg	C U	40.000	ug/kg	C U	41.000	ug/kg	C U
Dieldrin	4.000	ug/kg	C U	4.000	ug/kg	C U	4.100	ug/kg	C U
Endosulfan II	4.000	ug/kg	C U	4.000	ug/kg	C U	4.100	ug/kg	C U
Endosulfan sulfate	4.000	ug/kg	C U	4.000	ug/kg	C U	4.100	ug/kg	C U
Endosulfan-I	2.000	ug/kg	C U	2.100	ug/kg	C U	2.100	ug/kg	C U
Endrin	4.000	ug/kg	C U	4.000	ug/kg	C U	4.100	ug/kg	C U
Endrin aldehyde	4.000	ug/kg	C U	4.000	ug/kg	C U	4.100	ug/kg	C U
Endrin ketone	4.000	ug/kg	C U	4.000	ug/kg	C U	4.100	ug/kg	C U
Heptachlor	2.000	ug/kg	C U	2.100	ug/kg	C U	2.100	ug/kg	C U
Heptachlor epoxide	2.000	ug/kg	C U	2.100	ug/kg	C U	2.100	ug/kg	C U
Methoxychlor	20.000	ug/kg	C U	21.000	ug/kg	C U	21.000	ug/kg	C U
Toxaphene	200.000	ug/kg	C U	210.000	ug/kg	C U	210.000	ug/kg	C U
alpha-BHC	2.000	ug/kg	C U	2.100	ug/kg	C U	2.100	ug/kg	C U
alpha-Chlordane	2.000	ug/kg	C U	2.100	ug/kg	C U	2.100	ug/kg	C U
beta-BHC	2.000	ug/kg	C U	2.100	ug/kg	C U	2.100	ug/kg	C U
delta-BHC	2.000	ug/kg	C U	2.100	ug/kg	C U	2.100	ug/kg	C U
gamma-BHC (Lindane)	2.000	ug/kg	C U	2.100	ug/kg	C U	2.100	ug/kg	C U
gamma-Chlordane	2.000	ug/kg	C U	2.100	ug/kg	C U	2.100	ug/kg	C U

TABLE F-6A
(Continued)

PHASE II - CHEMICAL PARAMETERS

BORING NUMBER	1975			1975			1977		
SAMPLE NUMBER	112545			112550			110571		
	4-5			8.5-10.5			8.5-10		
SAMPLING DATE	04/13/93			04/13/93			04/06/93		
CHEMICAL PARAMETERS	RESULTS	UNITS	L VQ	RESULTS	UNITS	L VQ	RESULTS	UNITS	L VQ
Inorganics									
Aluminum	16600.000	mg/kg	D -	12000.000	mg/kg	C -	14900.000	mg/kg	D -
Antimony	1.200	mg/kg	D UJ	0.870	mg/kg	C UJ	1.200	mg/kg	D UJ
Arsenic	11.900	mg/kg	D -	6.900	mg/kg	C -	5.200	mg/kg	D -
Barium	179.000	mg/kg	D -	83.100	mg/kg	C -	97.400	mg/kg	D -
Beryllium	0.850	mg/kg	D -	0.580	mg/kg	C -	0.770	mg/kg	D -
Cadmium	1.200	mg/kg	D U	0.870	mg/kg	C U	1.200	mg/kg	D U
Calcium	3880.000	mg/kg	D -	68800.000	mg/kg	C -	76900.000	mg/kg	D -
Chromium	19.700	mg/kg	D -	14.300	mg/kg	C -	15.800	mg/kg	D -
Cobalt	4.800	mg/kg	D -	10.600	mg/kg	C -	9.500	mg/kg	D U
Copper	24.400	mg/kg	D -	21.300	mg/kg	C -	20.800	mg/kg	D -
Cyanide	0.120	mg/kg	D U	0.120	mg/kg	C U	0.120	mg/kg	D U
Iron	28200.000	mg/kg	D -	25500.000	mg/kg	C -	22700.000	mg/kg	D -
Lead	4.500	mg/kg	D J	5.500	mg/kg	C J	13.300	mg/kg	D J
Magnesium	4790.000	mg/kg	D -	22800.000	mg/kg	C -	26500.000	mg/kg	D -
Manganese	190.000	mg/kg	D J	452.000	mg/kg	C J	536.000	mg/kg	D J
Mercury	0.110	mg/kg	D U	0.110	mg/kg	C U	0.120	mg/kg	D U
Molybdenum	7.700	mg/kg	D -	7.500	mg/kg	C -	5.700	mg/kg	D -
Nickel	23.000	mg/kg	D -	26.600	mg/kg	C -	23.400	mg/kg	D -
Potassium	1030.000	mg/kg	D -	2210.000	mg/kg	C -	1490.000	mg/kg	D -
Selenium	0.470	mg/kg	D U	0.440	mg/kg	C UJ	0.450	mg/kg	D U
Silicon	401.000	mg/kg	D J	872.000	mg/kg	C J	975.000	mg/kg	D J
Silver	8.700	mg/kg	D -	7.400	mg/kg	C -	6.300	mg/kg	D -
Sodium	82.500	mg/kg	D -	126.000	mg/kg	C -	126.000	mg/kg	D -
Thallium	0.470	mg/kg	D U	0.440	mg/kg	C U	0.450	mg/kg	D U
Vanadium	35.800	mg/kg	D -	28.400	mg/kg	C -	32.800	mg/kg	D -
Zinc	72.900	mg/kg	D -	64.300	mg/kg	C -	55.500	mg/kg	D -
Volatile Organics									
1,1,1-Trichloroethane	12.000	ug/kg	D U	12.000	ug/kg	C U	12.000	ug/kg	D U
1,1,2,2-Tetrachloroethane	12.000	ug/kg	D U	12.000	ug/kg	C U	12.000	ug/kg	D U
1,1,2-Trichloroethane	12.000	ug/kg	D U	12.000	ug/kg	C U	12.000	ug/kg	D U
1,1-Dichloroethane	12.000	ug/kg	D U	12.000	ug/kg	C U	12.000	ug/kg	D U
1,1-Dichloroethene	12.000	ug/kg	D U	12.000	ug/kg	C U	12.000	ug/kg	D U
1,2-Dichloroethane	12.000	ug/kg	D U	12.000	ug/kg	C U	12.000	ug/kg	D U
1,2-Dichloroethene	12.000	ug/kg	D U	12.000	ug/kg	C U	12.000	ug/kg	D U
1,2-Dichloropropane	12.000	ug/kg	D U	12.000	ug/kg	C U	12.000	ug/kg	D U
2-Butanone	12.000	ug/kg	D U	12.000	ug/kg	C U	12.000	ug/kg	D U
2-Hexanone	12.000	ug/kg	D U	12.000	ug/kg	C U	12.000	ug/kg	D U
4-Methyl-2-pentanone	12.000	ug/kg	D U	12.000	ug/kg	C U	12.000	ug/kg	D U
Acetone	12.000	ug/kg	D U	12.000	ug/kg	C U	8.000	ug/kg	D J
Benzene	12.000	ug/kg	D U	12.000	ug/kg	C U	12.000	ug/kg	D U

0735

F 5174

TABLE F-6A
(Continued)

PHASE II - CHEMICAL PARAMETERS

BORING NUMBER	1975			1975			1977		
SAMPLE NUMBER	112545			112550			110571		
	4-5			8.5-10.5			8.5-10		
SAMPLING DATE	04/13/93			04/13/93			04/06/93		
CHEMICAL PARAMETERS	RESULTS	UNITS	L VQ	RESULTS	UNITS	L VQ	RESULTS	UNITS	L VQ
Volatile Organics									
Bromodichloromethane	12.000	ug/kg	D U	12.000	ug/kg	C U	12.000	ug/kg	D U
Bromoform	12.000	ug/kg	D U	12.000	ug/kg	C U	12.000	ug/kg	D U
Bromomethane	12.000	ug/kg	D U	12.000	ug/kg	C U	12.000	ug/kg	D U
Carbon Tetrachloride	12.000	ug/kg	D U	12.000	ug/kg	C U	12.000	ug/kg	D U
Carbon disulfide	12.000	ug/kg	D U	12.000	ug/kg	C U	12.000	ug/kg	D U
Chlorobenzene	12.000	ug/kg	D U	12.000	ug/kg	C U	12.000	ug/kg	D U
Chloroethane	12.000	ug/kg	D U	12.000	ug/kg	C U	12.000	ug/kg	D U
Chloroform	12.000	ug/kg	D U	12.000	ug/kg	C U	12.000	ug/kg	D U
Chloromethane	12.000	ug/kg	D U	12.000	ug/kg	C U	12.000	ug/kg	D U
Dibromochloromethane	12.000	ug/kg	D U	12.000	ug/kg	C U	12.000	ug/kg	D U
Ethylbenzene	12.000	ug/kg	D U	12.000	ug/kg	C U	12.000	ug/kg	D U
Methylene chloride	18.000	ug/kg	D U	16.000	ug/kg	C U	12.000	ug/kg	D U
Styrene	12.000	ug/kg	D U	12.000	ug/kg	C U	12.000	ug/kg	D U
Tetrachloroethene	12.000	ug/kg	D U	12.000	ug/kg	C U	12.000	ug/kg	D U
Toluene	12.000	ug/kg	D U	12.000	ug/kg	C U	2.000	ug/kg	D J
Trichloroethene	12.000	ug/kg	D U	12.000	ug/kg	C U	12.000	ug/kg	D U
Vinyl Acetate	12.000	ug/kg	D U	12.000	ug/kg	C U	12.000	ug/kg	D U
Vinyl chloride	12.000	ug/kg	D U	12.000	ug/kg	C U	12.000	ug/kg	D U
Xylenes, Total	12.000	ug/kg	D U	12.000	ug/kg	C U	12.000	ug/kg	D U
cis-1,3-Dichloropropene	12.000	ug/kg	D U	12.000	ug/kg	C U	12.000	ug/kg	D U
trans-1,3-Dichloropropene	12.000	ug/kg	D U	12.000	ug/kg	C U	12.000	ug/kg	D U
Semivolatile Organics									
1,2,4-Trichlorobenzene	400.000	ug/kg	D U	410.000	ug/kg	C U	410.000	ug/kg	D U
1,2-Dichlorobenzene	400.000	ug/kg	D U	410.000	ug/kg	C U	410.000	ug/kg	D U
1,3-Dichlorobenzene	400.000	ug/kg	D U	410.000	ug/kg	C U	410.000	ug/kg	D U
1,4-Dichlorobenzene	400.000	ug/kg	D U	410.000	ug/kg	C U	410.000	ug/kg	D U
2,4,5-Trichlorophenol	2000.000	ug/kg	D U	2000.000	ug/kg	C U	990.000	ug/kg	D U
2,4,6-Trichlorophenol	400.000	ug/kg	D U	410.000	ug/kg	C U	410.000	ug/kg	D U
2,4-Dichlorophenol	400.000	ug/kg	D U	410.000	ug/kg	C U	410.000	ug/kg	D U
2,4-Dimethylphenol	400.000	ug/kg	D U	410.000	ug/kg	C U	410.000	ug/kg	D U
2,4-Dinitrophenol	2000.000	ug/kg	D U	2000.000	ug/kg	C U	990.000	ug/kg	D U
2,4-Dinitrotoluene	400.000	ug/kg	D U	410.000	ug/kg	C U	410.000	ug/kg	D U
2,6-Dinitrotoluene	400.000	ug/kg	D U	410.000	ug/kg	C U	410.000	ug/kg	D U
2-Chloronaphthalene	400.000	ug/kg	D U	410.000	ug/kg	C U	410.000	ug/kg	D U
2-Chlorophenol	400.000	ug/kg	D U	410.000	ug/kg	C U	410.000	ug/kg	D U
2-Methylnaphthalene	400.000	ug/kg	D U	410.000	ug/kg	C U	410.000	ug/kg	D U
2-Methylphenol	400.000	ug/kg	D U	410.000	ug/kg	C U	410.000	ug/kg	D U
2-Nitroaniline	2000.000	ug/kg	D U	2000.000	ug/kg	C U	990.000	ug/kg	D U
2-Nitrophenol	400.000	ug/kg	D U	410.000	ug/kg	C U	410.000	ug/kg	D U
3,3'-Dichlorobenzidine	400.000	ug/kg	D U	410.000	ug/kg	C U	410.000	ug/kg	D U

TABLE F-6A
(Continued)

PHASE II - CHEMICAL PARAMETERS

BORING NUMBER	1975			1975			1977		
SAMPLE NUMBER	112545			112550			110571		
	4-5			8.5-10.5			8.5-10		
SAMPLING DATE	04/13/93			04/13/93			04/06/93		
CHEMICAL PARAMETERS	RESULTS	UNITS	L VQ	RESULTS	UNITS	L VQ	RESULTS	UNITS	L VQ
Semivolatile Organics									
3-Nitroaniline	2000.000	ug/kg	D U	2000.000	ug/kg	C U	990.000	ug/kg	D U
4,6-Dinitro-2-methylphenol	2000.000	ug/kg	D R	2000.000	ug/kg	C R	990.000	ug/kg	D U
4-Bromophenyl phenyl ether	400.000	ug/kg	D U	410.000	ug/kg	C U	410.000	ug/kg	D U
4-Chloro-3-methylphenol	400.000	ug/kg	D U	410.000	ug/kg	C U	410.000	ug/kg	D U
4-Chlorophenylphenyl ether	400.000	ug/kg	D U	410.000	ug/kg	C U	410.000	ug/kg	D U
4-Methylphenol	400.000	ug/kg	D U	410.000	ug/kg	C U	410.000	ug/kg	D U
4-Nitroaniline	2000.000	ug/kg	D R	2000.000	ug/kg	C R	990.000	ug/kg	D U
4-Nitrophenol	2000.000	ug/kg	D U	2000.000	ug/kg	C U	990.000	ug/kg	D U
Acenaphthene	400.000	ug/kg	D U	410.000	ug/kg	C U	410.000	ug/kg	D U
Acenaphthylene	400.000	ug/kg	D U	410.000	ug/kg	C U	410.000	ug/kg	D U
Anthracene	400.000	ug/kg	D U	410.000	ug/kg	C U	410.000	ug/kg	D U
Benzo(a)anthracene	400.000	ug/kg	D U	410.000	ug/kg	C U	410.000	ug/kg	D U
Benzo(a)pyrene	400.000	ug/kg	D U	410.000	ug/kg	C U	410.000	ug/kg	D U
Benzo(b)fluoranthene	400.000	ug/kg	D U	410.000	ug/kg	C U	410.000	ug/kg	D U
Benzo(g,h,i)perylene	400.000	ug/kg	D U	410.000	ug/kg	C U	410.000	ug/kg	D UJ
Benzo(k)fluoranthene	400.000	ug/kg	D U	410.000	ug/kg	C U	410.000	ug/kg	D U
Benzoic acid	1900.000	ug/kg	D U	2000.000	ug/kg	C U	2000.000	ug/kg	D U
Benzyl alcohol	400.000	ug/kg	D U	410.000	ug/kg	C U	410.000	ug/kg	D U
Butyl benzyl phthalate	400.000	ug/kg	D U	410.000	ug/kg	C U	410.000	ug/kg	D U
Carbazole	400.000	ug/kg	D U	410.000	ug/kg	C U	410.000	ug/kg	D U
Chrysene	400.000	ug/kg	D U	410.000	ug/kg	C U	410.000	ug/kg	D U
Di-n-butyl phthalate	400.000	ug/kg	D U	410.000	ug/kg	C U	410.000	ug/kg	D U
Di-n-octyl phthalate	400.000	ug/kg	D U	410.000	ug/kg	C U	410.000	ug/kg	D U
Dibenzo(a,h)anthracene	400.000	ug/kg	D U	410.000	ug/kg	C U	410.000	ug/kg	D U
Dibenzofuran	400.000	ug/kg	D U	410.000	ug/kg	C U	410.000	ug/kg	D U
Diethyl phthalate	400.000	ug/kg	D U	410.000	ug/kg	C U	410.000	ug/kg	D UJ
Dimethyl phthalate	400.000	ug/kg	D U	410.000	ug/kg	C U	410.000	ug/kg	D U
Fluoranthene	400.000	ug/kg	D U	410.000	ug/kg	C U	410.000	ug/kg	D U
Fluorene	400.000	ug/kg	D U	410.000	ug/kg	C U	410.000	ug/kg	D U
Hexachlorobenzene	400.000	ug/kg	D U	410.000	ug/kg	C U	410.000	ug/kg	D U
Hexachlorobutadiene	400.000	ug/kg	D U	410.000	ug/kg	C U	410.000	ug/kg	D U
Hexachlorocyclopentadiene	400.000	ug/kg	D U	410.000	ug/kg	C U	410.000	ug/kg	D U
Hexachloroethane	400.000	ug/kg	D U	410.000	ug/kg	C U	410.000	ug/kg	D U
Indeno(1,2,3-cd)pyrene	400.000	ug/kg	D U	410.000	ug/kg	C U	410.000	ug/kg	D U
Isophorone	400.000	ug/kg	D U	410.000	ug/kg	C U	410.000	ug/kg	D U
N-Nitroso-di-n-propylamine	400.000	ug/kg	D U	410.000	ug/kg	C U	410.000	ug/kg	D U
N-Nitrosodiphenylamine	400.000	ug/kg	D U	410.000	ug/kg	C U	410.000	ug/kg	D U
Naphthalene	400.000	ug/kg	D U	410.000	ug/kg	C U	410.000	ug/kg	D U
Nitrobenzene	400.000	ug/kg	D U	410.000	ug/kg	C U	410.000	ug/kg	D U
Pentachlorophenol	2000.000	ug/kg	D U	2000.000	ug/kg	C U	990.000	ug/kg	D U
Phenanthrene	400.000	ug/kg	D U	410.000	ug/kg	C U	410.000	ug/kg	D U
Phenol	400.000	ug/kg	D U	410.000	ug/kg	C U	410.000	ug/kg	D U

0737

FEMP-SU02-4.0R.FT4
February 18, 1994

TABLE F-6A
(Continued)

PHASE II - CHEMICAL PARAMETERS

BORING NUMBER	1975			1975			1977		
SAMPLE NUMBER	112545			112550			110571		
	4-5			8.5-10.5			8.5-10		
SAMPLING DATE	04/13/93			04/13/93			04/06/93		
CHEMICAL PARAMETERS	RESULTS	UNITS	L VQ	RESULTS	UNITS	L VQ	RESULTS	UNITS	L VQ
Semivolatile Organics									
Pyrene	400.000	ug/kg	D U	410.000	ug/kg	C U	410.000	ug/kg	D U
bis(2-Chloroethoxy)methane	400.000	ug/kg	D U	410.000	ug/kg	C U	410.000	ug/kg	D U
bis(2-Chloroethyl)ether	400.000	ug/kg	D U	410.000	ug/kg	C U	410.000	ug/kg	D U
bis(2-Chloroisopropyl) ether	400.000	ug/kg	D U	410.000	ug/kg	C U	410.000	ug/kg	D U
bis(2-Ethylhexyl) phthalate	71.000	ug/kg	D J	410.000	ug/kg	C U	410.000	ug/kg	D U
p-Chloroaniline	400.000	ug/kg	D U	410.000	ug/kg	C U	410.000	ug/kg	D U
Pesticide Organics/PCBs									
4,4'-DDD	4.100	ug/kg	D UJ	4.100	ug/kg	C UJ	4.100	ug/kg	D UJ
4,4'-DDE	4.100	ug/kg	D U	4.100	ug/kg	C U	4.100	ug/kg	D U
4,4'-DDT	4.100	ug/kg	D U	4.100	ug/kg	C U	4.100	ug/kg	D U
Aldrin	2.100	ug/kg	D U	2.100	ug/kg	C U	2.100	ug/kg	D U
Aroclor-1016	41.000	ug/kg	D U	41.000	ug/kg	C U	41.000	ug/kg	D U
Aroclor-1221	82.000	ug/kg	D U	83.000	ug/kg	C U	83.000	ug/kg	D U
Aroclor-1232	41.000	ug/kg	D U	41.000	ug/kg	C U	41.000	ug/kg	D U
Aroclor-1242	41.000	ug/kg	D U	41.000	ug/kg	C U	41.000	ug/kg	D U
Aroclor-1248	41.000	ug/kg	D U	41.000	ug/kg	C U	41.000	ug/kg	D U
Aroclor-1254	41.000	ug/kg	D -	41.000	ug/kg	C U	41.000	ug/kg	D U
Aroclor-1260	41.000	ug/kg	D U	41.000	ug/kg	C U	41.000	ug/kg	D U
Dieldrin	4.100	ug/kg	D U	4.100	ug/kg	C U	4.100	ug/kg	D U
Endosulfan II	4.100	ug/kg	D U	4.100	ug/kg	C U	4.100	ug/kg	D U
Endosulfan sulfate	4.100	ug/kg	D U	4.100	ug/kg	C U	4.100	ug/kg	D U
Endosulfan-I	2.100	ug/kg	D U	2.100	ug/kg	C U	2.100	ug/kg	D U
Endrin	4.100	ug/kg	D U	4.100	ug/kg	C U	4.100	ug/kg	D U
Endrin aldehyde	4.100	ug/kg	D U	4.100	ug/kg	C U	4.100	ug/kg	D U
Endrin ketone	4.100	ug/kg	D U	4.100	ug/kg	C U	4.100	ug/kg	D U
Heptachlor	2.100	ug/kg	D U	2.100	ug/kg	C U	2.100	ug/kg	D U
Heptachlor epoxide	2.100	ug/kg	D U	2.100	ug/kg	C U	2.100	ug/kg	D U
Methoxychlor	21.000	ug/kg	D U	21.000	ug/kg	C U	21.000	ug/kg	D U
Toxaphene	210.000	ug/kg	D U	210.000	ug/kg	C U	210.000	ug/kg	D U
alpha-BHC	2.100	ug/kg	D U	2.100	ug/kg	C U	2.100	ug/kg	D U
alpha-Chlordane	2.100	ug/kg	D U	2.100	ug/kg	C U	2.100	ug/kg	D U
beta-BHC	2.100	ug/kg	D U	2.100	ug/kg	C U	2.100	ug/kg	D U
delta-BHC	2.100	ug/kg	D U	2.100	ug/kg	C U	2.100	ug/kg	D U
gamma-BHC (Lindane)	2.100	ug/kg	D U	2.100	ug/kg	C U	2.100	ug/kg	D U
gamma-Chlordane	2.100	ug/kg	D U	2.100	ug/kg	C U	2.100	ug/kg	D U

TABLE F-6A
(Continued)

PHASE II - CHEMICAL PARAMETERS

BORING NUMBER	1977			1978			1978		
SAMPLE NUMBER	110579			110406			112584		
	16.5-18.5			0.5-1			9.5-11		
SAMPLING DATE	04/07/93			03/24/93			04/16/93		
CHEMICAL PARAMETERS	RESULTS	UNITS	L VQ	RESULTS	UNITS	L VQ	RESULTS	UNITS	L VQ
Inorganics									
Aluminum	6460.000	mg/kg	C -	11000.000	mg/kg	C J	14600.000	mg/kg	C -
Antimony	0.970	mg/kg	C UJ	1.100	mg/kg	C UJ	1.300	mg/kg	C U
Arsenic	1.500	mg/kg	C -	7.600	mg/kg	C J	4.000	mg/kg	C -
Barium	22.400	mg/kg	C -	86.700	mg/kg	C -	97.400	mg/kg	C -
Beryllium	0.390	mg/kg	C U	0.560	mg/kg	C -	1.000	mg/kg	C -
Cadmium	0.970	mg/kg	C U	1.100	mg/kg	C U	1.300	mg/kg	C U
Calcium	106000.000	mg/kg	C -	32300.000	mg/kg	C J	7360.000	mg/kg	C -
Chromium	8.500	mg/kg	C -	12.700	mg/kg	C -	17.400	mg/kg	C -
Cobalt	4.500	mg/kg	C -	8.100	mg/kg	C -	7.500	mg/kg	C -
Copper	14.300	mg/kg	C -	16.800	mg/kg	C -	23.900	mg/kg	C -
Cyanide	0.110	mg/kg	C U	0.120	mg/kg	C U	0.130	mg/kg	C U
Iron	15000.000	mg/kg	C -	21300.000	mg/kg	C J	22200.000	mg/kg	C -
Lead	4.600	mg/kg	C J	8.000	mg/kg	C -	4.900	mg/kg	C J
Magnesium	31400.000	mg/kg	C -	11800.000	mg/kg	C -	4470.000	mg/kg	C -
Manganese	309.000	mg/kg	C J	618.000	mg/kg	C J	406.000	mg/kg	C -
Mercury	0.100	mg/kg	C U	0.110	mg/kg	C U	0.120	mg/kg	C U
Molybdenum	5.500	mg/kg	C -	7.100	mg/kg	C J	6.400	mg/kg	C -
Nickel	14.800	mg/kg	C -	21.700	mg/kg	C -	22.300	mg/kg	C -
Potassium	1310.000	mg/kg	C -	918.000	mg/kg	C -	1440.000	mg/kg	C -
Selenium	0.440	mg/kg	C UJ	0.470	mg/kg	C U	0.510	mg/kg	C U
Silicon	5.500	mg/kg	C J	468.000	mg/kg	C J	719.000	mg/kg	C -
Silver	3.800	mg/kg	C -	5.600	mg/kg	C -	7.200	mg/kg	C -
Sodium	155.000	mg/kg	C -	72.400	mg/kg	C -	76.400	mg/kg	C -
Thallium	0.480	mg/kg	C -	0.470	mg/kg	C U	0.510	mg/kg	C U
Vanadium	17.200	mg/kg	C -	26.500	mg/kg	C -	33.600	mg/kg	C -
Zinc	36.800	mg/kg	C -	48.000	mg/kg	C J	65.600	mg/kg	C -
Volatile Organics									
1,1,1-Trichloroethane	11.000	ug/kg	C U	12.000	ug/kg	C U	13.000	ug/kg	C U
1,1,2,2-Tetrachloroethane	11.000	ug/kg	C U	12.000	ug/kg	C U	13.000	ug/kg	C U
1,1,2-Trichloroethane	11.000	ug/kg	C U	12.000	ug/kg	C U	13.000	ug/kg	C U
1,1-Dichloroethane	11.000	ug/kg	C U	12.000	ug/kg	C U	13.000	ug/kg	C U
1,1-Dichloroethene	11.000	ug/kg	C U	12.000	ug/kg	C U	13.000	ug/kg	C U
1,2-Dichloroethane	11.000	ug/kg	C U	12.000	ug/kg	C U	13.000	ug/kg	C U
1,2-Dichloroethene	11.000	ug/kg	C U	12.000	ug/kg	C U	13.000	ug/kg	C U
1,2-Dichloropropane	11.000	ug/kg	C U	12.000	ug/kg	C U	13.000	ug/kg	C U
2-Butanone	2.000	ug/kg	C J	12.000	ug/kg	C U	13.000	ug/kg	C U
2-Hexanone	11.000	ug/kg	C U	12.000	ug/kg	C UJ	13.000	ug/kg	C UJ
4-Methyl-2-pentanone	11.000	ug/kg	C U	12.000	ug/kg	C UJ	13.000	ug/kg	C UJ
Acetone	14.000	ug/kg	C -	12.000	ug/kg	C U	5.000	ug/kg	C J
Benzene	11.000	ug/kg	C U	12.000	ug/kg	C U	13.000	ug/kg	C U

TABLE F-6A
(Continued)

PHASE II - CHEMICAL PARAMETERS

BORING NUMBER	1977			1978			1978		
SAMPLE NUMBER	110579			110406			112584		
	16.5-18.5			0.5-1			9.5-11		
SAMPLING DATE	04/07/93			03/24/93			04/16/93		
CHEMICAL PARAMETERS	RESULTS	UNITS	L VQ	RESULTS	UNITS	L VQ	RESULTS	UNITS	L VQ
Volatile Organics									
Bromodichloromethane	11.000	ug/kg	C U	12.000	ug/kg	C U	13.000	ug/kg	C U
Bromoform	11.000	ug/kg	C U	12.000	ug/kg	C U	13.000	ug/kg	C U
Bromomethane	11.000	ug/kg	C U	12.000	ug/kg	C U	13.000	ug/kg	C UJ
Carbon Tetrachloride	11.000	ug/kg	C U	12.000	ug/kg	C U	13.000	ug/kg	C U
Carbon disulfide	4.000	ug/kg	C J	12.000	ug/kg	C U	13.000	ug/kg	C U
Chlorobenzene	11.000	ug/kg	C U	12.000	ug/kg	C U	13.000	ug/kg	C U
Chloroethane	11.000	ug/kg	C U	12.000	ug/kg	C U	13.000	ug/kg	C UJ
Chloroform	11.000	ug/kg	C U	12.000	ug/kg	C U	13.000	ug/kg	C U
Chloromethane	11.000	ug/kg	C U	12.000	ug/kg	C U	13.000	ug/kg	C U
Dibromochloromethane	11.000	ug/kg	C U	12.000	ug/kg	C U	13.000	ug/kg	C U
Ethylbenzene	11.000	ug/kg	C U	12.000	ug/kg	C U	13.000	ug/kg	C U
Methylene chloride	11.000	ug/kg	C U	12.000	ug/kg	C U	13.000	ug/kg	C U
Styrene	11.000	ug/kg	C U	12.000	ug/kg	C U	13.000	ug/kg	C U
Tetrachloroethene	11.000	ug/kg	C U	12.000	ug/kg	C U	13.000	ug/kg	C U
Toluene	31.000	ug/kg	C -	1.000	ug/kg	C J	13.000	ug/kg	C U
Trichloroethene	11.000	ug/kg	C U	12.000	ug/kg	C U	13.000	ug/kg	C U
Vinyl Acetate	11.000	ug/kg	C U	12.000	ug/kg	C U	13.000	ug/kg	C UJ
Vinyl chloride	11.000	ug/kg	C U	12.000	ug/kg	C UJ	13.000	ug/kg	C U
Xylenes, Total	11.000	ug/kg	C U	12.000	ug/kg	C U	13.000	ug/kg	C U
cis-1,3-Dichloropropene	11.000	ug/kg	C U	12.000	ug/kg	C U	13.000	ug/kg	C U
trans-1,3-Dichloropropene	11.000	ug/kg	C U	12.000	ug/kg	C U	13.000	ug/kg	C U
Semivolatile Organics									
1,2,4-Trichlorobenzene	380.000	ug/kg	C U	400.000	ug/kg	C U	450.000	ug/kg	C U
1,2-Dichlorobenzene	380.000	ug/kg	C U	400.000	ug/kg	C U	450.000	ug/kg	C U
1,2-Diphenylhydrazine	NA			400.000	ug/kg	C UJ	NA		
1,3-Dichlorobenzene	380.000	ug/kg	C U	400.000	ug/kg	C U	450.000	ug/kg	C U
1,4-Dichlorobenzene	380.000	ug/kg	C U	400.000	ug/kg	C U	450.000	ug/kg	C U
2,4,5-Trichlorophenol	910.000	ug/kg	C U	1900.000	ug/kg	C U	1100.000	ug/kg	C U
2,4,6-Trichlorophenol	380.000	ug/kg	C U	400.000	ug/kg	C U	450.000	ug/kg	C U
2,4-Dichlorophenol	380.000	ug/kg	C U	400.000	ug/kg	C U	450.000	ug/kg	C U
2,4-Dimethylphenol	380.000	ug/kg	C U	400.000	ug/kg	C U	450.000	ug/kg	C U
2,4-Dinitrophenol	910.000	ug/kg	C U	1900.000	ug/kg	C UJ	1100.000	ug/kg	C UJ
2,4-Dinitrotoluene	380.000	ug/kg	C U	400.000	ug/kg	C U	450.000	ug/kg	C U
2,6-Dinitrotoluene	380.000	ug/kg	C U	400.000	ug/kg	C U	450.000	ug/kg	C U
2-Chloronaphthalene	380.000	ug/kg	C U	400.000	ug/kg	C U	450.000	ug/kg	C U
2-Chlorophenol	380.000	ug/kg	C U	400.000	ug/kg	C U	450.000	ug/kg	C U
2-Methylnaphthalene	380.000	ug/kg	C U	400.000	ug/kg	C U	450.000	ug/kg	C U
2-Methylphenol	380.000	ug/kg	C U	400.000	ug/kg	C U	450.000	ug/kg	C U
2-Nitroaniline	910.000	ug/kg	C U	1900.000	ug/kg	C UJ	1100.000	ug/kg	C U
2-Nitrophenol	380.000	ug/kg	C U	400.000	ug/kg	C UJ	450.000	ug/kg	C U

TABLE F-6A
(Continued)

PHASE II - CHEMICAL PARAMETERS

BORING NUMBER	1977				1978				1978			
SAMPLE NUMBER	110579				110406				112584			
	16.5-18.5				0.5-1				9.5-11			
SAMPLING DATE	04/07/93				03/24/93				04/16/93			
CHEMICAL PARAMETERS	RESULTS	UNITS	L	VQ	RESULTS	UNITS	L	VQ	RESULTS	UNITS	L	VQ
Semivolatile Organics												
3,3'-Dichlorobenzidine	380.000	ug/kg	C	U	400.000	ug/kg	C	U	450.000	ug/kg	C	U
3-Nitroaniline	910.000	ug/kg	C	U	1900.000	ug/kg	C	U	1100.000	ug/kg	C	U
4,6-Dinitro-2-methylphenol	910.000	ug/kg	C	U	1900.000	ug/kg	C	R	1100.000	ug/kg	C	R
4-Bromophenyl phenyl ether	380.000	ug/kg	C	U	400.000	ug/kg	C	U	450.000	ug/kg	C	UJ
4-Chloro-3-methylphenol	380.000	ug/kg	C	U	400.000	ug/kg	C	U	450.000	ug/kg	C	U
4-Chlorophenylphenyl ether	380.000	ug/kg	C	U	400.000	ug/kg	C	U	450.000	ug/kg	C	U
4-Methylphenol	380.000	ug/kg	C	U	400.000	ug/kg	C	U	450.000	ug/kg	C	U
4-Nitroaniline	910.000	ug/kg	C	U	1900.000	ug/kg	C	U	1100.000	ug/kg	C	R
4-Nitrophenol	910.000	ug/kg	C	U	1900.000	ug/kg	C	U	1100.000	ug/kg	C	U
Acenaphthene	380.000	ug/kg	C	U	400.000	ug/kg	C	U	450.000	ug/kg	C	U
Acenaphthylene	380.000	ug/kg	C	U	400.000	ug/kg	C	U	450.000	ug/kg	C	U
Anthracene	380.000	ug/kg	C	U	400.000	ug/kg	C	U	450.000	ug/kg	C	U
Benzo(a)anthracene	380.000	ug/kg	C	U	400.000	ug/kg	C	U	450.000	ug/kg	C	U
Benzo(a)pyrene	380.000	ug/kg	C	U	3.000	ug/kg	C	J	450.000	ug/kg	C	U
Benzo(b)fluoranthene	380.000	ug/kg	C	U	400.000	ug/kg	C	U	450.000	ug/kg	C	U
Benzo(g,h,i)perylene	380.000	ug/kg	C	UJ	400.000	ug/kg	C	U	76.000	ug/kg	C	J
Benzo(k)fluoranthene	380.000	ug/kg	C	U	400.000	ug/kg	C	U	450.000	ug/kg	C	U
Benzoic acid	1800.000	ug/kg	C	U	1900.000	ug/kg	C	UJ	2200.000	ug/kg	C	UJ
Benzyl alcohol	380.000	ug/kg	C	U	400.000	ug/kg	C	UJ	450.000	ug/kg	C	U
Butyl benzyl phthalate	380.000	ug/kg	C	U	400.000	ug/kg	C	U	450.000	ug/kg	C	U
Carbazole	380.000	ug/kg	C	U	400.000	ug/kg	C	U	450.000	ug/kg	C	U
Chrysene	380.000	ug/kg	C	U	400.000	ug/kg	C	U	450.000	ug/kg	C	U
Di-n-butyl phthalate	380.000	ug/kg	C	U	400.000	ug/kg	C	U	450.000	ug/kg	C	U
Di-n-octyl phthalate	380.000	ug/kg	C	U	400.000	ug/kg	C	U	450.000	ug/kg	C	U
Dibenzo(a,h)anthracene	380.000	ug/kg	C	U	400.000	ug/kg	C	U	450.000	ug/kg	C	U
Dibenzofuran	380.000	ug/kg	C	U	400.000	ug/kg	C	U	450.000	ug/kg	C	U
Diethyl phthalate	380.000	ug/kg	C	UJ	400.000	ug/kg	C	U	450.000	ug/kg	C	U
Dimethyl phthalate	380.000	ug/kg	C	U	400.000	ug/kg	C	U	450.000	ug/kg	C	U
Fluoranthene	380.000	ug/kg	C	U	400.000	ug/kg	C	U	450.000	ug/kg	C	U
Fluorene	380.000	ug/kg	C	U	400.000	ug/kg	C	U	450.000	ug/kg	C	U
Hexachlorobenzene	380.000	ug/kg	C	U	400.000	ug/kg	C	U	450.000	ug/kg	C	U
Hexachlorobutadiene	380.000	ug/kg	C	U	400.000	ug/kg	C	U	450.000	ug/kg	C	U
Hexachlorocyclopentadiene	380.000	ug/kg	C	U	400.000	ug/kg	C	U	450.000	ug/kg	C	UJ
Hexachloroethane	380.000	ug/kg	C	U	400.000	ug/kg	C	U	450.000	ug/kg	C	U
Indeno(1,2,3-cd)pyrene	380.000	ug/kg	C	U	400.000	ug/kg	C	U	450.000	ug/kg	C	U
Isophorone	380.000	ug/kg	C	U	400.000	ug/kg	C	U	450.000	ug/kg	C	U
N-Nitroso-di-n-propylamine	380.000	ug/kg	C	U	400.000	ug/kg	C	U	450.000	ug/kg	C	UJ
N-Nitrosodimethylamine	NA				400.000	ug/kg	C	U	NA			
N-Nitrosodiphenylamine	380.000	ug/kg	C	U	400.000	ug/kg	C	U	450.000	ug/kg	C	U
Naphthalene	380.000	ug/kg	C	U	400.000	ug/kg	C	U	450.000	ug/kg	C	U
Nitrobenzene	380.000	ug/kg	C	U	400.000	ug/kg	C	U	450.000	ug/kg	C	U
Pentachlorophenol	910.000	ug/kg	C	U	1900.000	ug/kg	C	U	1100.000	ug/kg	C	UJ

0174
0174

TABLE F-6A
(Continued)

PHASE II - CHEMICAL PARAMETERS

BORING NUMBER	1977			1978			1978		
SAMPLE NUMBER	110579			110406			112584		
	16.5-18.5			0.5-1			9.5-11		
SAMPLING DATE	04/07/93			03/24/93			04/16/93		
CHEMICAL PARAMETERS	RESULTS	UNITS	L VQ	RESULTS	UNITS	L VQ	RESULTS	UNITS	L VQ
Semivolatile Organics									
Phenanthrene	380.000	ug/kg	C U	400.000	ug/kg	C U	450.000	ug/kg	C U
Phenol	380.000	ug/kg	C U	400.000	ug/kg	C U	450.000	ug/kg	C U
Pyrene	380.000	ug/kg	C U	400.000	ug/kg	C U	450.000	ug/kg	C U
Tributyl phosphate	NA			400.000	ug/kg	C U	NA		
bis(2-Chloroethoxy)methane	380.000	ug/kg	C U	400.000	ug/kg	C U	450.000	ug/kg	C U
bis(2-Chloroethyl)ether	380.000	ug/kg	C U	400.000	ug/kg	C U	450.000	ug/kg	C U
bis(2-Chloroisopropyl) ether	380.000	ug/kg	C U	400.000	ug/kg	C U	450.000	ug/kg	C UJ
bis(2-Ethylhexyl) phthalate	380.000	ug/kg	C U	46.000	ug/kg	C J	450.000	ug/kg	C U
p-Chloroaniline	380.000	ug/kg	C U	400.000	ug/kg	C U	450.000	ug/kg	C U
Pesticide Organics/PCBs									
4,4'-DDD	4.100	ug/kg	C U	4.000	ug/kg	C U	4.200	ug/kg	C U
4,4'-DDE	4.100	ug/kg	C U	4.000	ug/kg	C U	4.200	ug/kg	C U
4,4'-DDT	4.100	ug/kg	C UJ	4.000	ug/kg	C U	4.200	ug/kg	C U
Aldrin	2.100	ug/kg	C U	2.100	ug/kg	C U	2.200	ug/kg	C U
Aroclor-1016	41.000	ug/kg	C U	40.000	ug/kg	C U	42.000	ug/kg	C U
Aroclor-1221	83.000	ug/kg	C U	81.000	ug/kg	C U	86.000	ug/kg	C U
Aroclor-1232	41.000	ug/kg	C U	40.000	ug/kg	C U	42.000	ug/kg	C U
Aroclor-1242	41.000	ug/kg	C U	40.000	ug/kg	C U	42.000	ug/kg	C U
Aroclor-1248	41.000	ug/kg	C U	40.000	ug/kg	C U	42.000	ug/kg	C U
Aroclor-1254	41.000	ug/kg	C U	47.000	ug/kg	C -	42.000	ug/kg	C U
Aroclor-1260	41.000	ug/kg	C U	40.000	ug/kg	C U	42.000	ug/kg	C U
Dieldrin	4.100	ug/kg	C U	4.000	ug/kg	C U	4.200	ug/kg	C U
Endosulfan II	4.100	ug/kg	C U	4.000	ug/kg	C U	4.200	ug/kg	C U
Endosulfan sulfate	4.100	ug/kg	C U	4.000	ug/kg	C U	4.200	ug/kg	C U
Endosulfan-I	2.100	ug/kg	C U	2.100	ug/kg	C U	2.200	ug/kg	C U
Endrin	4.100	ug/kg	C U	4.000	ug/kg	C U	4.200	ug/kg	C U
Endrin aldehyde	4.100	ug/kg	C U	4.000	ug/kg	C U	4.200	ug/kg	C U
Endrin ketone	4.100	ug/kg	C U	4.000	ug/kg	C U	4.200	ug/kg	C U
Heptachlor	2.100	ug/kg	C U	2.100	ug/kg	C U	2.200	ug/kg	C U
Heptachlor epoxide	2.100	ug/kg	C U	2.100	ug/kg	C U	2.200	ug/kg	C U
Methoxychlor	21.000	ug/kg	C U	21.000	ug/kg	C U	22.000	ug/kg	C U
Toxaphene	210.000	ug/kg	C U	210.000	ug/kg	C U	220.000	ug/kg	C U
alpha-BHC	2.100	ug/kg	C U	2.100	ug/kg	C U	2.200	ug/kg	C U
alpha-Chlordane	2.100	ug/kg	C U	2.100	ug/kg	C U	2.200	ug/kg	C U
beta-BHC	2.100	ug/kg	C U	2.100	ug/kg	C U	2.200	ug/kg	C U
delta-BHC	2.100	ug/kg	C U	2.100	ug/kg	C U	2.200	ug/kg	C U
gamma-BHC (Lindane)	2.100	ug/kg	C U	2.100	ug/kg	C U	2.200	ug/kg	C U
gamma-Chlordane	2.100	ug/kg	C U	2.100	ug/kg	C U	2.200	ug/kg	C U

5124
07442

TABLE F-6A
(Continued)

PHASE II - CHEMICAL PARAMETERS

BORING NUMBER	1978			SF-SS-19		
SAMPLE NUMBER	112588			110369		
	13.5-15			0.5-1		
SAMPLING DATE	04/16/93			03/22/93		
CHEMICAL PARAMETERS	RESULTS	UNITS	L VQ	RESULTS	UNITS	L VQ
Inorganics						
Aluminum	5310.000	mg/kg	C -	7510.000	mg/kg	C -
Antimony	0.770	mg/kg	C UJ	0.940	mg/kg	C R
Arsenic	6.700	mg/kg	C -	4.400	mg/kg	C -
Barium	13.600	mg/kg	C -	48.200	mg/kg	C -
Beryllium	1.500	mg/kg	C U	0.510	mg/kg	C -
Cadmium	3.900	mg/kg	C U	0.940	mg/kg	C U
Calcium	252000.000	mg/kg	C -	108000.000	mg/kg	C -
Chromium	7.700	mg/kg	C U	10.100	mg/kg	C -
Cobalt	7.700	mg/kg	C U	5.600	mg/kg	C -
Copper	7.700	mg/kg	C U	13.500	mg/kg	C -
Cyanide	0.110	mg/kg	C U	0.120	mg/kg	C U
Iron	12000.000	mg/kg	C -	15800.000	mg/kg	C -
Lead	4.900	mg/kg	C -	60.300	mg/kg	C J
Magnesium	11500.000	mg/kg	C -	24700.000	mg/kg	C J
Manganese	973.000	mg/kg	C -	468.000	mg/kg	C -
Mercury	0.100	mg/kg	C U	0.120	mg/kg	C U
Molybdenum	15.400	mg/kg	C U	4.500	mg/kg	C -
Nickel	15.400	mg/kg	C U	14.900	mg/kg	C -
Potassium	1100.000	mg/kg	C -	1270.000	mg/kg	C -
Selenium	0.390	mg/kg	C U	0.460	mg/kg	C UJ
Silicon	303.000	mg/kg	C -	515.000	mg/kg	C J
Silver	7.700	mg/kg	C U	4.500	mg/kg	C -
Sodium	138.000	mg/kg	C -	153.000	mg/kg	C -
Thallium	0.390	mg/kg	C U	0.460	mg/kg	C U
Vanadium	11.800	mg/kg	C -	19.800	mg/kg	C -
Zinc	32.300	mg/kg	C -	37.300	mg/kg	C -
Volatile Organics						
1,1,1-Trichloroethane	11.000	ug/kg	C U	6.000	ug/kg	C U
1,1,2,2-Tetrachloroethane	11.000	ug/kg	C U	6.000	ug/kg	C U
1,1,2-Trichloroethane	11.000	ug/kg	C U	6.000	ug/kg	C U
1,1-Dichloroethane	11.000	ug/kg	C U	6.000	ug/kg	C UJ
1,1-Dichloroethene	11.000	ug/kg	C U	6.000	ug/kg	C U
1,2-Dichloroethane	11.000	ug/kg	C U	6.000	ug/kg	C U
1,2-Dichloroethene	11.000	ug/kg	C U	6.000	ug/kg	C U
1,2-Dichloropropane	11.000	ug/kg	C U	6.000	ug/kg	C U
2-Butanone	11.000	ug/kg	C U	11.000	ug/kg	C UJ
2-Hexanone	11.000	ug/kg	C UJ	11.000	ug/kg	C U
4-Methyl-2-pentanone	11.000	ug/kg	C UJ	11.000	ug/kg	C U
Acetone	3.000	ug/kg	C J	11.000	ug/kg	C U
Benzene	11.000	ug/kg	C U	6.000	ug/kg	C U

0743
5174

TABLE F-6A
(Continued)

PHASE II - CHEMICAL PARAMETERS

BORING NUMBER	1978			SF-SS-19			
SAMPLE NUMBER	112588			110369			
	13.5-15			0.5-1			
SAMPLING DATE	04/16/93			03/22/93			
CHEMICAL PARAMETERS	RESULTS	UNITS	L VQ	RESULTS	UNITS	L	VQ
Volatile Organics							
Bromodichloromethane	11.000	ug/kg	C U	6.000	ug/kg	C	U
Bromoform	11.000	ug/kg	C U	6.000	ug/kg	C	U
Bromomethane	11.000	ug/kg	C UJ	11.000	ug/kg	C	UJ
Carbon Tetrachloride	11.000	ug/kg	C U	6.000	ug/kg	C	U
Carbon disulfide	11.000	ug/kg	C U	6.000	ug/kg	C	U
Chlorobenzene	11.000	ug/kg	C U	6.000	ug/kg	C	U
Chloroethane	11.000	ug/kg	C UJ	11.000	ug/kg	C	UJ
Chloroform	11.000	ug/kg	C U	6.000	ug/kg	C	U
Chloromethane	11.000	ug/kg	C U	11.000	ug/kg	C	U
Dibromochloromethane	11.000	ug/kg	C U	6.000	ug/kg	C	U
Ethylbenzene	11.000	ug/kg	C U	6.000	ug/kg	C	U
Methylene chloride	11.000	ug/kg	C U	11.000	ug/kg	C	UJ
Styrene	11.000	ug/kg	C U	6.000	ug/kg	C	U
Tetrachloroethene	11.000	ug/kg	C U	6.000	ug/kg	C	U
Toluene	11.000	ug/kg	C U	6.000	ug/kg	C	U
Trichloroethene	11.000	ug/kg	C U	6.000	ug/kg	C	U
Vinyl Acetate	11.000	ug/kg	C UJ	11.000	ug/kg	C	U
Vinyl chloride	11.000	ug/kg	C U	11.000	ug/kg	C	U
Xylenes, Total	11.000	ug/kg	C U	6.000	ug/kg	C	U
cis-1,3-Dichloropropene	11.000	ug/kg	C U	6.000	ug/kg	C	U
trans-1,3-Dichloropropene	11.000	ug/kg	C U	6.000	ug/kg	C	U
Semivolatile Organics							
1,2,4-Trichlorobenzene	370.000	ug/kg	C U	420.000	ug/kg	C	U
1,2-Dichlorobenzene	370.000	ug/kg	C U	420.000	ug/kg	C	U
1,2-Diphenylhydrazine	NA			420.000	ug/kg	C	U
1,3-Dichlorobenzene	370.000	ug/kg	C U	420.000	ug/kg	C	U
1,4-Dichlorobenzene	370.000	ug/kg	C U	420.000	ug/kg	C	U
2,4,5-Trichlorophenol	910.000	ug/kg	C U	1000.000	ug/kg	C	U
2,4,6-Trichlorophenol	370.000	ug/kg	C U	420.000	ug/kg	C	U
2,4-Dichlorophenol	370.000	ug/kg	C U	420.000	ug/kg	C	U
2,4-Dimethylphenol	370.000	ug/kg	C U	420.000	ug/kg	C	U
2,4-Dinitrophenol	910.000	ug/kg	C UJ	2000.000	ug/kg	C	UJ
2,4-Dinitrotoluene	370.000	ug/kg	C U	420.000	ug/kg	C	U
2,6-Dinitrotoluene	370.000	ug/kg	C U	420.000	ug/kg	C	U
2-Chloronaphthalene	370.000	ug/kg	C U	420.000	ug/kg	C	U
2-Chlorophenol	370.000	ug/kg	C U	420.000	ug/kg	C	U
2-Methylnaphthalene	370.000	ug/kg	C U	420.000	ug/kg	C	U
2-Methylphenol	370.000	ug/kg	C U	420.000	ug/kg	C	U
2-Nitroaniline	910.000	ug/kg	C U	1000.000	ug/kg	C	U
2-Nitrophenol	370.000	ug/kg	C U	420.000	ug/kg	C	U

TABLE F-6A
(Continued)

PHASE II - CHEMICAL PARAMETERS

BORING NUMBER	1978			SF-SS-19		
SAMPLE NUMBER	112588			110369		
	13.5-15			0.5-1		
SAMPLING DATE	04/16/93			03/22/93		
CHEMICAL PARAMETERS	RESULTS	UNITS	L VQ	RESULTS	UNITS	L VQ
Semivolatile Organics						
3,3'-Dichlorobenzidine	370.000	ug/kg	C U	420.000	ug/kg	C U
3-Nitroaniline	910.000	ug/kg	C U	1000.000	ug/kg	C U
4,6-Dinitro-2-methylphenol	910.000	ug/kg	C R	1000.000	ug/kg	C UJ
4-Bromophenyl phenyl ether	370.000	ug/kg	C UJ	420.000	ug/kg	C U
4-Chloro-3-methylphenol	370.000	ug/kg	C U	420.000	ug/kg	C U
4-Chlorophenylphenyl ether	370.000	ug/kg	C U	420.000	ug/kg	C U
4-Methylphenol	370.000	ug/kg	C U	420.000	ug/kg	C U
4-Nitroaniline	910.000	ug/kg	C R	1000.000	ug/kg	C U
4-Nitrophenol	910.000	ug/kg	C U	1000.000	ug/kg	C U
Acenaphthene	370.000	ug/kg	C U	420.000	ug/kg	C U
Acenaphthylene	370.000	ug/kg	C U	420.000	ug/kg	C U
Anthracene	370.000	ug/kg	C U	420.000	ug/kg	C U
Benzo(a)anthracene	370.000	ug/kg	C U	97.000	ug/kg	C J
Benzo(a)pyrene	370.000	ug/kg	C U	110.000	ug/kg	C J
Benzo(b)fluoranthene	370.000	ug/kg	C U	110.000	ug/kg	C J
Benzo(g,h,i)perylene	370.000	ug/kg	C UJ	79.000	ug/kg	C J
Benzo(k)fluoranthene	370.000	ug/kg	C U	110.000	ug/kg	C J
Benzoic acid	1800.000	ug/kg	C UJ	2000.000	ug/kg	C UJ
Benzyl alcohol	370.000	ug/kg	C U	420.000	ug/kg	C U
Butyl benzyl phthalate	370.000	ug/kg	C U	420.000	ug/kg	C U
Carbazole	370.000	ug/kg	C U	420.000	ug/kg	C U
Chrysene	370.000	ug/kg	C U	140.000	ug/kg	C J
Di-n-butyl phthalate	370.000	ug/kg	C U	420.000	ug/kg	C U
Di-n-octyl phthalate	370.000	ug/kg	C U	420.000	ug/kg	C U
Dibenzo(a,h)anthracene	370.000	ug/kg	C U	420.000	ug/kg	C U
Dibenzofuran	370.000	ug/kg	C U	420.000	ug/kg	C U
Diethyl phthalate	370.000	ug/kg	C U	420.000	ug/kg	C U
Dimethyl phthalate	370.000	ug/kg	C U	420.000	ug/kg	C U
Fluoranthene	370.000	ug/kg	C U	210.000	ug/kg	C J
Fluorene	370.000	ug/kg	C U	420.000	ug/kg	C U
Hexachlorobenzene	370.000	ug/kg	C U	420.000	ug/kg	C U
Hexachlorobutadiene	370.000	ug/kg	C U	420.000	ug/kg	C U
Hexachlorocyclopentadiene	370.000	ug/kg	C UJ	420.000	ug/kg	C U
Hexachloroethane	370.000	ug/kg	C U	420.000	ug/kg	C U
Indeno(1,2,3-cd)pyrene	370.000	ug/kg	C U	77.000	ug/kg	C J
Isophorone	370.000	ug/kg	C U	420.000	ug/kg	C U
N-Nitroso-di-n-propylamine	370.000	ug/kg	C UJ	420.000	ug/kg	C U
N-Nitrosodimethylamine	NA			420.000	ug/kg	C U
N-Nitrosodiphenylamine	370.000	ug/kg	C U	420.000	ug/kg	C U
Naphthalene	370.000	ug/kg	C U	420.000	ug/kg	C U
Nitrobenzene	370.000	ug/kg	C U	420.000	ug/kg	C U
Pentachlorophenol	910.000	ug/kg	C UJ	1000.000	ug/kg	C U

51745
11745

TABLE F-6A
(Continued)

PHASE II - CHEMICAL PARAMETERS

BORING NUMBER	1978			SF-SS-19		
SAMPLE NUMBER	112588			110369		
	13.5-15			0.5-1		
SAMPLING DATE	04/16/93			03/22/93		
CHEMICAL PARAMETERS	RESULTS	UNITS	L VQ	RESULTS	UNITS	L VQ
Semivolatile Organics						
Phenanthrene	370.000	ug/kg	C U	80.000	ug/kg	C J
Phenol	370.000	ug/kg	C U	420.000	ug/kg	C U
Pyrene	370.000	ug/kg	C U	170.000	ug/kg	C J
Tributyl phosphate	NA			420.000	ug/kg	C U
bis(2-Chloroethoxy)methane	370.000	ug/kg	C U	420.000	ug/kg	C U
bis(2-Chloroethyl)ether	370.000	ug/kg	C U	420.000	ug/kg	C U
bis(2-Chloroisopropyl) ether	370.000	ug/kg	C U	420.000	ug/kg	C U
bis(2-Ethylhexyl) phthalate	370.000	ug/kg	C U	88.000	ug/kg	C J
p-Chloroaniline	370.000	ug/kg	C U	420.000	ug/kg	C U
Pesticide Organics/PCBs						
4,4'-DDD	3.700	ug/kg	C U	4.200	ug/kg	C U
4,4'-DDE	3.700	ug/kg	C U	4.200	ug/kg	C U
4,4'-DDT	3.700	ug/kg	C U	4.200	ug/kg	C U
Aldrin	1.900	ug/kg	C U	2.200	ug/kg	C U
Aroclor-1016	37.000	ug/kg	C U	42.000	ug/kg	C U
Aroclor-1221	76.000	ug/kg	C U	85.000	ug/kg	C U
Aroclor-1232	37.000	ug/kg	C U	42.000	ug/kg	C U
Aroclor-1242	37.000	ug/kg	C U	42.000	ug/kg	C U
Aroclor-1248	37.000	ug/kg	C U	42.000	ug/kg	C U
Aroclor-1254	37.000	ug/kg	C U	42.000	ug/kg	C U
Aroclor-1260	37.000	ug/kg	C U	89.000	ug/kg	C J
Dieldrin	3.700	ug/kg	C U	4.200	ug/kg	C U
Endosulfan II	3.700	ug/kg	C U	4.200	ug/kg	C U
Endosulfan sulfate	3.700	ug/kg	C U	4.200	ug/kg	C U
Endosulfan-I	1.900	ug/kg	C U	2.200	ug/kg	C U
Endrin	3.700	ug/kg	C U	4.200	ug/kg	C U
Endrin aldehyde	3.700	ug/kg	C U	4.200	ug/kg	C U
Endrin ketone	3.700	ug/kg	C U	4.200	ug/kg	C U
Heptachlor	1.900	ug/kg	C U	2.200	ug/kg	C U
Heptachlor epoxide	1.900	ug/kg	C U	2.200	ug/kg	C U
Methoxychlor	19.000	ug/kg	C U	22.000	ug/kg	C U
Toxaphene	190.000	ug/kg	C U	220.000	ug/kg	C U
alpha-BHC	1.900	ug/kg	C U	2.200	ug/kg	C U
alpha-Chlordane	1.900	ug/kg	C U	2.200	ug/kg	C U
beta-BHC	1.900	ug/kg	C U	2.200	ug/kg	C U
delta-BHC	1.900	ug/kg	C U	2.200	ug/kg	C U
gamma-BHC (Lindane)	1.900	ug/kg	C U	2.200	ug/kg	C U
gamma-Chlordane	1.900	ug/kg	C U	2.200	ug/kg	C U

5174

TABLE F-6B
SOUTH FIELD
TENTATIVELY IDENTIFIED COMPOUNDS
SEDIMENT AND SUBSURFACE SOIL

Sample Number	Sample Location	Media	Parameter	Result	Units
110425	SF-SD-01	SD	hexanoic acid	130	ug/kg
110425	SF-SD-01	SD	hexanal, 3-methyl-	110	ug/kg
110425	SF-SD-01	SD	tetradecanoic acid	230	ug/kg
110425	SF-SD-01	SD	tritetracontane	130	ug/kg
110428	SF-SD-03	SD	1,2-benzenedicarboxylic acid	240	ug/kg
110428	SF-SD-03	SD	14-pentadecenoic acid	310	ug/kg
110428	SF-SD-03	SD	tetradecanoic acid	830	ug/kg
110428	SF-SD-03	SD	9-octadecenoic acid (z)-	140	ug/kg
110428	SF-SD-03	SD	hexanedioic acid, dioctyl es	140	ug/kg
110428	SF-SD-03	SD	tritetracontane	210	ug/kg
110428	SF-SD-03	SD	tritetracontane	170	ug/kg
110428	SF-SD-03	SD	tritetracontane	220	ug/kg
110428	SF-SD-03	SD	tritetracontane	130	ug/kg
110428	SF-SD-03	SD	tritetracontane	1000	ug/kg
110428	SF-SD-03	SD	tritetracontane	510	ug/kg
110430	SF-SD-02	SD	tetradecanoic acid	350	ug/kg
110430	SF-SD-02	SD	tritetracontane	160	ug/kg
110430	SF-SD-02	SD	tritetracontane	180	ug/kg
110430	SF-SD-02	SD	tritetracontane	240	ug/kg
110430	SF-SD-02	SD	tritetracontane	170	ug/kg
110430	SF-SD-02	SD	tritetracontane	200	ug/kg
110430	SF-SD-02	SD	cyclohexanol, 3-ethenyl-3-me	110	ug/kg
110430	SF-SD-02	SD	tritetracontane	400	ug/kg
110430	SF-SD-02	SD	tritetracontane	970	ug/kg
110430	SF-SD-02	SD	eicosane, 2-methyl-	310	ug/kg
110327	SF-SB-08	SB	propanoic acid, 2-methyl-,	190	ug/kg
110327	SF-SB-08	SB	hexanedioic acid, mono(2-eth	17000	ug/kg
110339	SF-SB-06	SB	1-hepten-3-ol	10000	ug/kg
110339	SF-SB-06	SB	1,2,3,4-butanetetrol, tetra	13000	ug/kg
110339	SF-SB-06	SB	1-propanamine	14000	ug/kg
110339	SF-SB-06	SB	2,6-piperazinedione, 4-benzo	120	ug/kg
110339	SF-SB-06	SB	propanoic acid, 2-methyl-,	220	ug/kg
110339	SF-SB-06	SB	tetradecanoic acid	180	ug/kg
110339	SF-SB-06	SB	hexanedioic acid, mono(2-eth	310	ug/kg
110339	SF-SB-06	SB	stigmast-5-en-3-ol, (3.beta.)-	100	ug/kg
110343	SF-SS-16	SB	1-propanamine	27000	ug/kg
110343	SF-SS-16	SB	2-heptanone, 6-methyl-5-meth	160	ug/kg
110343	SF-SS-16	SB	benzenecarbothioic acid	130	ug/kg
110343	SF-SS-16	SB	propanoic acid, 2-methyl-,	110	ug/kg
110343	SF-SS-16	SB	tetradecanoic acid	180	ug/kg
110343	SF-SS-16	SB	biphenyl, 2,4,4',5-tetrachlo	100	ug/kg
110343	SF-SS-16	SB	hexanedioic acid, dioctyl es	10000	ug/kg
110343	SF-SS-16	SB	1-dotriacontanol	92	ug/kg
110343	SF-SS-16	SB	benzo-j-fluoranthene	98	ug/kg
110343	SF-SS-16	SB	5.alpha.-stigmast-9(11)-en-3	90	ug/kg
110362	SF-SB-04	SB	7-oxabicyclo 4.1.0 heptane	190	ug/kg
110362	SF-SB-04	SB	propanoic acid, 2-methyl-,	88	ug/kg
110362	SF-SB-04	SB	tetradecanoic acid	85	ug/kg
110362	SF-SB-04	SB	hexanedioic acid, mono(2-eth	90	ug/kg
110362	SF-SB-04	SB	eicosane, 2-methyl-	200	ug/kg
110369	SF-SS-19	SB	hexanedioic acid, mono(2-eth	160	ug/kg
110369	SF-SS-19	SB	tetradecanoic acid	270	ug/kg
110369	SF-SS-19	SB	hexanedioic acid, mono(2-eth	110	ug/kg
110369	SF-SS-19	SB	hexanedioic acid, dioctyl es	16000	ug/kg
110369	SF-SS-19	SB	arsenous acid, tris (trimethy	110	ug/kg

5174

TABLE F-6B
SOUTH FIELD
TENTATIVELY IDENTIFIED COMPOUNDS
SEDIMENT AND SUBSURFACE SOIL

Sample Number	Sample Location	Media	Parameter	Result	Units
110392	SF-SB-05	SB	cyclobutanone, 2-methyl-2-ox	230	ug/kg
110392	SF-SB-05	SB	2,4,6-trimethyl-1-nonene	370	ug/kg
110392	SF-SB-05	SB	1-hexanol, 2-ethyl-	110	ug/kg
110392	SF-SB-05	SB	2-pentanone, 4-hydroxy-4-met	120	ug/kg
110392	SF-SB-05	SB	2h-1-benzopyran-2-one	630	ug/kg
110392	SF-SB-05	SB	tetradecanoic acid	380	ug/kg
110392	SF-SB-05	SB	1,3-dioxolane, 4-ethyl-5-oct	140	ug/kg
110392	SF-SB-05	SB	arsenous acid, tris (trimethy	170	ug/kg
110392	SF-SB-05	SB	eicosane, 2-methyl-	170	ug/kg
110392	SF-SB-05	SB	3-isopropoxy-1,1,1,5,5,5-hex	150	ug/kg
110392	SF-SB-05	SB	arsenous acid, tris (trimethy	420	ug/kg
110392	SF-SB-05	SB	arsenous acid, tris (trimethy	580	ug/kg
110392	SF-SB-05	SB	arsenous acid, tris (trimethy	110	ug/kg
110396	SF-SB-05	SB	tetradecanoic acid	110	ug/kg
110396	SF-SB-05	SB	hexanedioic acid, dioctyl es	15000	ug/kg
110396	SF-SB-05	SB	eicosane, 2-methyl-	140	ug/kg
110405	SF-SB-03	SB	propanoic acid, 2-methyl-,	94	ug/kg
110405	SF-SB-03	SB	heptadecane, 2,6,10,15-tetra	120	ug/kg
110405	SF-SB-03	SB	tritetracontane	240	ug/kg
110413	SF-SB-10	SB	hexanedioic acid, dioctyl es	170	ug/kg
110415	SF-SB-11	SB	1,2-benzenedicarboxylic acid	100	ug/kg
110415	SF-SB-11	SB	tritetracontane	86	ug/kg
110415	SF-SB-11	SB	tritetracontane	110	ug/kg
110415	SF-SB-11	SB	tritetracontane	120	ug/kg
112696	1967	SB	cyclopentane, methyl-	10	ug/kg
112696	1967	SB	hexane (dot)	8	ug/kg
112731	1967	SB	2-hexanone, 6-(acetyloxy)-	1700	ug/kg
112731	1967	SB	3-hexen-2-one, 5-methyl-	870	ug/kg
112731	1967	SB	2h-pyran-2.3-diol, tetrahydr	1600	ug/kg
112731	1967	SB	hydroxylamine, o-pentyl-	280	ug/kg
112731	1967	SB	hexanedioic acid, mono (2-eth	82	ug/kg
112731	1967	SB	pentanamide	180	ug/kg
112731	1967	SB	tetrtetrcontane	200	ug/kg
112731	1967	SB	hexadecanoic acid, 1- (2-A	790	ug/kg
112731	1967	SB	hexanedioic acid, dioctyl es	19000	ug/kg
112731	1967	SB	tetratetracontane	430	ug/kg
112731	1967	SB	tetratetracontane	380	ug/kg
112731	1967	SB	tetratetracontane	270	ug/kg
112731	1967	SB	tritetracontane	100	ug/kg
112731	1967	SB	eicosane, 2-methyl-	190	ug/kg
112737	1968	SB	cyclopentane, methyl	6	ug/kg
112737	1968	SB	2-hexanone, 6-(acetyloxy)-	1800	ug/kg
112737	1968	SB	3-hexen-2-one, 5-methyl-	1500	ug/kg
112737	1968	SB	2h-pyran-2.3-diol, tetrahydr	1600	ug/kg
112737	1968	SB	3-octadecanone	170	ug/kg
112737	1968	SB	tritetracontane	180	ug/kg
112737	1968	SB	tritetracontane	380	ug/kg
112737	1968	SB	hexanedioic acid, dioctyl es	18000	ug/kg
112737	1968	SB	tritetracontane	390	ug/kg
112737	1968	SB	tritetracontane	440	ug/kg
112737	1968	SB	tritetracontane	340	ug/kg
112737	1968	SB	dotriacontane	220	ug/kg
112763	1965	SB	2h-pyran-2.3-diol, tetrahydr	1700	ug/kg
112763	1965	SB	ethene, 1,1'-oxybis-	170	ug/kg
112763	1965	SB	ethanone, 1-oxiranyl-	160	ug/kg
112835	1968	SB	2-hexanone, 6-(acetyloxy)-	2300	ug/kg
112835	1968	SB	3-hexen-2-one, 5-methyl-	2000	ug/kg
112835	1968	SB	pentane, 1-propoxy-	160	ug/kg

5174

TABLE F-6B
SOUTH FIELD
TENTATIVELY IDENTIFIED COMPOUNDS
SEDIMENT AND SUBSURFACE SOIL

Sample Number	Sample Location	Media	Parameter	Result	Units
112835	1968	SB	2h-pyran-2.3-diol, tetrahydr	2800	ug/kg
112835	1968	SB	hydroxylamine, o-pentyl-	450	ug/kg
112835	1968	SB	hexanedioic acid, dioctyl es	17000	ug/kg
112835	1968	SB	tritetracontane	170	ug/kg
112835	1968	SB	tritetracontane	160	ug/kg
112835	1968	SB	tritetracontane	130	ug/kg
112835	1968	SB	octadecane, 3-ethyl-5-(2-eth	160	ug/kg
112849	1968	SB	octane, 4-methyl-	230	ug/kg
112849	1968	SB	2-hexanone, 6-(acetyloxy)-	1500	ug/kg
112849	1968	SB	3-hexen-2-one, 5-methyl-	1100	ug/kg
112849	1968	SB	2h-pyran-2.3-diol, tetrahydr	1000	ug/kg
112849	1968	SB	hydroxylamine, o-pentyl-	320	ug/kg
112849	1968	SB	hexadecane, 1-iodo-	150	ug/kg
112849	1968	SB	hexanedioic acid, dioctyl es	18000	ug/kg
112849	1968	SB	tetratetracontane	300	ug/kg
112849	1968	SB	tetratetracontane	270	ug/kg
112849	1968	SB	tetratetracontane	200	ug/kg
112997	1941	SB	azacyclotridecan-2-one	22	ug/kg
113104	TRENCH 1	SB	2-hexanone, 6-(acetyloxy)-	230	ug/kg
113104	TRENCH 1	SB	1,2-benzenedicarboxylic acid	190	ug/kg
113104	TRENCH 1	SB	tritetracontane	83	ug/kg
113104	TRENCH 1	SB	tetratetracontane	190	ug/kg
113104	TRENCH 1	SB	tritetracontane	170	ug/kg
113104	TRENCH 1	SB	tritetracontane	150	ug/kg
113104	TRENCH 1	SB	dotriacontane	110	ug/kg
113718	TRENCH 1	SB	1,1,2-trichloro-1,2,2-triflu	700	ug/kg
113718	TRENCH 1	SB	heptadecane, 2,6,10,15-tetra	150	ug/kg
113718	TRENCH 1	SB	nonadecane	200	ug/kg
113718	TRENCH 1	SB	pentatriacontane	310	ug/kg
113718	TRENCH 1	SB	tritetracontane	320	ug/kg
113718	TRENCH 1	SB	tetratetracontane	210	ug/kg
113718	TRENCH 1	SB	tetratetracontane	330	ug/kg
113718	TRENCH 1	SB	dotriacontane	190	ug/kg
113718	TRENCH 1	SB	dotriacontane	210	ug/kg
113718	TRENCH 1	SB	dotriacontane	210	ug/kg
113718	TRENCH 1	SB	2,5-furandione, 3-(dodecenyl	150	ug/kg
113718	TRENCH 1	SB	4-hexenoic acid, 3-methyl-2,	230	ug/kg
113718	TRENCH 1	SB	baccharane	170	ug/kg
113718	TRENCH 1	SB	cyclohexanol, 3-ethenyl-3-me	290	ug/kg
113718	TRENCH 1	SB	d:a-friedooleanan-7-ol, (7.a	180	ug/kg
113722	TRENCH 4	SB	benzene, 1,1'-(1,2-ethynediy	400	ug/kg

SD - sediment
SB - subsurface soil

0749

TABLE F-7A

SOUTH FIELD
CIS SUBSURFACE SOIL RESULTS RADIOLOGICAL DATA
OPERABLE UNIT 2 REMEDIAL INVESTIGATION
FERNALD ENVIRONMENTAL MANAGEMENT PROJECT

Radionuclide[a]	Qualifier[b]	Activity Concentrations (pCi/g)	Uncertainty (pCi/g)
BOREHOLE 24-01			
Cesium-137		NOT ANALYZED	
Neptunium-237		NOT ANALYZED	
Lead-210		28.00	2.00
Plutonium-238		NOT ANALYZED	
Plutonium-239/240		NOT ANALYZED	
Radium-226		9.00	1.00
Radium-228		1.60	0.80
Ruthenium-106		NOT ANALYZED	
Strontium-90		NOT ANALYZED	
Technetium-99		NOT ANALYZED	
Thorium-228		0.10	0.10
Thorium-230		9.60	0.50
Thorium-232	<[c]	0.10	NA[d]
Uranium-234		9.10	0.40
Uranium-235		0.40	0.10
Uranium-238		19.00	1.00
BOREHOLE 24-02			
Cesium-137		NOT ANALYZED	
Neptunium-237		NOT ANALYZED	
Lead-210		3.00	1.00
Plutonium-238		NOT ANALYZED	
Plutonium-239/240		NOT ANALYZED	
Radium-226		1.20	0.40
Radium-228		0.90	0.60
Ruthenium-106		NOT ANALYZED	
Strontium-90		NOT ANALYZED	
Technetium-99		NOT ANALYZED	
Thorium-228		0.20	0.10
Thorium-230		0.30	0.10
Thorium-232		0.20	0.10
Uranium-234		2.00	0.20
Uranium-235		0.09	0.07
Uranium-238		4.90	0.40

See footnotes at end of table

TABLE F-7A
(Continued)

Radionuclide[a]	Qualifier[b]	Activity Concentrations (pCi/g)	Uncertainty (pCi/g)
BOREHOLE 24-03			
Cesium-137		NOT ANALYZED	
Neptunium-237		NOT ANALYZED	
Lead-210		2.00	1.00
Plutonium-238		NOT ANALYZED	
Plutonium-239/240		NOT ANALYZED	
Radium-226		0.80	0.30
Radium-228		0.60	0.40
Ruthenium-106		NOT ANALYZED	
Strontium-90		NOT ANALYZED	
Technetium-99		NOT ANALYZED	
Thorium-228	<	0.10	NA
Thorium-230		0.10	0.10
Thorium-232	<	0.10	NA
Uranium-234		8.20	0.40
Uranium-235		0.50	0.10
Uranium-238		24.00	1.00
BOREHOLE 24-04			
Cesium-137		NOT ANALYZED	
Neptunium-237		NOT ANALYZED	
Lead-210		4.00	1.00
Plutonium-238		NOT ANALYZED	
Plutonium-239/240		NOT ANALYZED	
Radium-226		2.10	0.50
Radium-228		2.20	0.70
Ruthenium-106		NOT ANALYZED	
Strontium-90		NOT ANALYZED	
Technetium-99		NOT ANALYZED	
Thorium-228		0.30	0.20
Thorium-230		0.50	0.20
Thorium-232	<	0.10	NA
Uranium-234		5.80	0.30
Uranium-235		0.30	0.10
Uranium-238		9.20	0.40
BOREHOLE 24-05			
Cesium-137		NOT ANALYZED	
Neptunium-237		NOT ANALYZED	
Lead-210		26.00	2.00

See footnotes at end of table

TABLE F-7A
(Continued)

Radionuclide[a]	Qualifier[b]	Activity Concentrations (pCi/g)	Uncertainty (pCi/g)
BOREHOLE 24-05 (Continued)			
Plutonium-238		NOT ANALYZED	
Plutonium-239/240		NOT ANALYZED	
Radium-226		17.00	1.00
Radium-228	<	1.00	NA
Ruthenium-106		NOT ANALYZED	
Strontium-90		NOT ANALYZED	
Technetium-99		NOT ANALYZED	
Thorium-228		0.80	0.30
Thorium-230		10.00	1.00
Thorium-232		0.50	0.20
Uranium-234		3.80	0.30
Uranium-235		0.20	0.05
Uranium-238		5.10	0.30
BOREHOLE 24-06			
Cesium-137		NOT ANALYZED	
Neptunium-237		NOT ANALYZED	
Lead-210		4.00	1.00
Plutonium-238		NOT ANALYZED	
Plutonium-239/240		NOT ANALYZED	
Radium-226		5.00	1.00
Radium-228		1.00	0.60
Ruthenium-106		NOT ANALYZED	
Strontium-90		NOT ANALYZED	
Technetium-99		NOT ANALYZED	
Thorium-228	<	0.10	NA
Thorium-230		0.50	0.10
Thorium-232	<	0.10	NA
Uranium-234		2.60	0.20
Uranium-235		0.10	0.04
Uranium-238		3.10	0.20
BOREHOLE 24-07			
Cesium-137		NOT ANALYZED	
Neptunium-237		NOT ANALYZED	
Lead-210		2.00	1.00
Plutonium-238		NOT ANALYZED	
Plutonium-239/240		NOT ANALYZED	

See footnotes at end of table

5174

TABLE F-7A
(Continued)

Radionuclide[a]	Qualifier[b]	Activity Concentrations (pCi/g)	Uncertainty (pCi/g)
		BOREHOLE 24-07 (Continued)	
Radium-226		0.70	0.50
Radium-228		3.00	1.00
Ruthenium-106		NOT ANALYZED	
Strontium-90		NOT ANALYZED	
Technetium-99		NOT ANALYZED	
Thorium-228		0.70	0.20
Thorium-230		1.10	0.30
Thorium-232		0.60	0.20
Uranium-234		15.00	1.00
Uranium-235		0.60	0.10
Uranium-238		16.00	1.00
		BOREHOLE 24-08	
Cesium-137		NOT ANALYZED	
Neptunium-237		NOT ANALYZED	
Lead-210		3.00	1.00
Plutonium-238		NOT ANALYZED	
Plutonium-239/240		NOT ANALYZED	
Radium-226		0.70	0.50
Radium-228		9.00	1.00
Ruthenium-106		NOT ANALYZED	
Strontium-90		NOT ANALYZED	
Technetium-99		NOT ANALYZED	
Thorium-228		1.30	0.20
Thorium-230		0.70	0.20
Thorium-232		1.40	0.20
Uranium-234		14.00	1.00
Uranium-235		0.80	0.10
Uranium-238		17.00	1.00
		BOREHOLE 24-09	
Cesium-137		NOT ANALYZED	
Neptunium-237		NOT ANALYZED	
Lead-210		2.00	1.00
Plutonium-238		NOT ANALYZED	
Plutonium-239/240		NOT ANALYZED	
Radium-226		0.90	0.40
Radium-228		10.00	1.00

See footnotes at end of table

0753

TABLE F-7A
(Continued)

Radionuclide[a]	Qualifier[b]	Activity Concentrations (pCi/g)	Uncertainty (pCi/g)
		BOREHOLE 24-09 (Continued)	
Ruthenium-106		NOT ANALYZED	
Strontium-90		NOT ANALYZED	
Technetium-99		NOT ANALYZED	
Thorium-228		1.90	0.20
Thorium-230		0.50	0.10
Thorium-232		2.10	0.20
Uranium-234		15.00	1.00
Uranium-235		0.80	0.10
Uranium-238		42.00	1.00
		BOREHOLE 24-12	
Cesium-137		NOT ANALYZED	
Neptunium-237		NOT ANALYZED	
Lead-210		2.00	1.00
Plutonium-238		NOT ANALYZED	
Plutonium-239/240		NOT ANALYZED	
Radium-226		0.60	0.30
Radium-228		2.00	0.60
Ruthenium-106		NOT ANALYZED	
Strontium-90		NOT ANALYZED	
Technetium-99		NOT ANALYZED	
Thorium-228	<	0.20	NA
Thorium-230	<	0.10	NA
Thorium-232	<	0.10	NA
Uranium-234		6.70	0.40
Uranium-235		0.20	0.10
Uranium-238		9.00	0.40

[a]RA-226 and RA-228, when reported, were measured by gamma spectrometry and reported on a dry weight basis.

[b]Laboratory qualifiers, no data validation was performed.

[c]< = Less than

[d]Not Applicable

0754

TABLE F-7B

SOUTH FIELD
CIS SUBSURFACE SOIL RESULTS
NON-RADIOLOGICAL DATA
OPERABLE UNIT 2 REMEDIAL INVESTIGATION
FERNALD ENVIRONMENTAL MANAGEMENT PROJECT

DRAFT

Analyte	Sample No. PS-24-001 Boring 24-01 Result	Validation Qualifier	Sample No. PS-24-011 Boring 24-02 Result	Validation Qualifier	Sample No. PS-24-012 Boring 24-03 Result	Validation Qualifier
INORGANICS (mg/kg)						
Aluminum	8990	J	13100	J	9620	J
Antimony	1.0	UJ	0.3	J	0.3	J
Arsenic	6.0	J	4.1	J	3.7	J
Barium	88	J	119		55	
Beryllium	0.2	J	0.4	J	0.4	J
Cadmium	2.9	J	4.2	J	2.9	J
Calcium	32600	J	79400		43100	
Chromium	14		18	J	14	J
Cobalt	28		9.8	J	8.1	J
Copper	23	J	13	J	11	J
Cyanide	0.6	U	0.6	U	0.6	U
Iron	16100	J	21600		640	
Lead	11	J	16	J	15	J
Magnesium	15900	J	16800		18700	
Manganese	838	J	393	J	329	J
Mercury	1.2	J	0.1	J	0.4	J
Nickel	48		28	J	22	J
Potassium	632		1440		640	
Selenium	0.4	R	0.3	J	0.4	J

TABLE F-7B
(Continued)

Analyte	Sample No. PS-24-001 Boring 24-01 Result	Validation Qualifier	Sample No. PS-24-011 Boring 24-02 Result	Validation Qualifier	Sample No. PS-24-012 Boring 24-03 Result	Validation Qualifier
INORGANICS (mg/kg) (Continued)						
Silver	1.4	UJ	1.3	U	1.4	U
Sodium	310	U	59	U	64	U
Thallium	0.2	UJ	0.2	J	0.2	J
Vanadium	15		20		19	
Zinc	49	J	49	J	43	J
VOLATILES (µg/kg)						
1,1,1-Trichloroethane	-	-	200	U	-	-
1,1,2,2-Tetrachloroethane	-	-	200	U	-	-
1,1,2-Trichloroethane	-	-	200	U	-	-
1,1-Dichloroethane	-	-	200	U	-	-
1,1-Dichloroethene	-	-	200	U	-	-
1,2-Dichloroethane	-	-	200	U	-	-
1,2-Dichloropropane	-	-	200	U	-	-
1,3-Dichloropropene	-	-	200	U	-	-
1,3-Dichloropropylene	-	-	ND		-	-
2-Butanone	-	-	400	R	-	-
2-Chloroethyl vinyl ether	-	-	400	J	-	-
2-Hexanone	-	-	400	J	-	-
4-Methyl-2-Pentanone	-	-	400	U	-	-
Acetone	-	-	400	UJ	-	-
Acrolein	-	-	ND	R	-	-
Acrylonitrile	-	-	ND	R	-	-
Benzene	-	-	200	U	-	-

TABLE F-7B
(Continued)

Analyte	Sample No. PS-24-001 Boring 24-01 Result	Validation Qualifier	Sample No. PS-24-011 Boring 24-02 Result	Validation Qualifier	Sample No. PS-24-012 Boring 24-03 Result	Validation Qualifier
VOLATILES (µg/kg) (Continued)						
Bis(chloromethyl)ether	-	-	ND	R	-	-
Bromodichloromethane	-	-	200	U	-	-
Bromoform	-	-	200	U	-	-
Bromomethane	-	-	400	J	-	-
Carbon disulfide	-	-	200	U	-	-
Carbon tetrachloride	-	-	200	U	-	-
Chlorobenzene	-	-	200	U	-	-
Chloroethane	-	-	400	J	-	-
Chloroform	-	-	200	U	-	-
Chloromethane	-	-	400	J	-	-
Cis-1,2-dichloroethylene	-	-	ND		-	-
Dibromochloromethane	-	-	200	U	-	-
Dichlorodifluoromethane	-	-	ND	R	-	-
Ethylbenzene	-	-	200	U	-	-
Methylene chloride	-	-	200	U	-	-
Styrene	-	-	200	U	-	-
Tetrachloroethene	-	-	200	U	-	-
Toluene	-	-	200	U	-	-
Total xylene	-	-	200	U	-	-
Trans-1,2-dichloroethene	-	-	200	U	-	-
Trichloroethene	-	-	200	U	-	-
Vinyl acetate	-	-	400	U	-	-
Vinyl chloride	-	-	400	U	-	-

TABLE F-7B
(Continued)

Analyte	Sample No. PS-24-001 Boring 24-01 Result	Validation Qualifier	Sample No. PS-24-011 Boring 24-02 Result	Validation Qualifier	Sample No. PS-24-012 Boring 24-03 Result	Validation Qualifier
SEMIVOLATILES (μ/kg)						
1,2,4-Trichlorobenzene	450	U	-	-	-	-
1,2-Dichlorobenzene	450	U	-	-	-	-
1,3-Dichlorobenzene	450	U	-	-	-	-
1,4-Dichlorobenzene	450	U	-	-	-	-
2,4,5-Trichlorophenol	2300	R	-	-	-	-
2,4,6-Trichlorophenol	450	U	-	-	-	-
2,4-Dichlorophenol	450	U	-	-	-	-
2,4-Dimethylphenol	450	U	-	-	-	-
2,4-Dinitrophenol	2300	U	-	-	-	-
2,4-Dinitrotoluene	450	U	-	-	-	-
2,6-Dinitrotoluene	450	U	-	-	-	-
2-Chloronaphthalene	450	U	-	-	-	-
2-Chlorophenol	450	U	-	-	-	-
2-Methylnaphthalene	450	U	-	-	-	-
2-Methylphenol	450	U	-	-	-	-
2-Nitroaniline	2300	U	-	-	-	-
2-Nitrophenol	450	U	-	-	-	-
3,3-Dichlorobenzidine	900	U	-	-	-	-
3-Nitroaniline	2300	U	-	-	-	-
4,6-Dinitro-2-methylphenol	2300	U	-	-	-	-
4-Bromophenyl phenyl ether	450	U	-	-	-	-
4-Chloroaniline	450	U	-	-	-	-
4-Chloro-3-methylphenol	450	U	-	-	-	-
4-Methylphenol	450	U	-	-	-	-
4-Nitroaniline	2300	U	-	-	-	-

DRAFT

TABLE F-7B
(Continued)

Analyte	Sample No. PS-24-001 Boring 24-01 Result	Validation Qualifier	Sample No. PS-24-011 Boring 24-02 Result	Validation Qualifier	Sample No. PS-24-012 Boring 24-03 Result	Validation Qualifier
SEMIVOLATILES (μ/kg) (Continued)						
4-Nitrophenol	2300	U	-	-	-	-
Acenaphthene	450	U	-	-	-	-
Acenaphthylene	450	U	-	-	-	-
Anthracene	450	U	-	-	-	-
Benzoic acid	2300	R	-	-	-	-
Benzo(a)anthracene	450	U	-	-	-	-
Benzo(a)pyrene	450	U	-	-	-	-
Benzo(b)fluoranthene	450	U	-	-	-	-
Benzo(g,h,i)perylene	450	U	-	-	-	-
Benzo(k)fluoranthene	450	U	-	-	-	-
Benzyl alcohol	450	U	-	-	-	-
Bis(2-chloroethoxy)methane	450	U	-	-	-	-
Bis(2-chloroethyl)ether	450	U	-	-	-	-
Bis(2-chloroisopropyl)ether	450	J	-	-	-	-
Bis(2-ethylhexyl)phthalate	450	U	-	-	-	-
Butyl benzyl phthalate	450	U	-	-	-	-
Chrysene	450	U	-	-	-	-
Dibenzofuran	450	U	-	-	-	-
Dibenzo(a,h)anthracene	450	U	-	-	-	-
Diethyl phthalate	450	U	-	-	-	-
Dimethyl phthalate	450	U	-	-	-	-
Di-n-butylphthalate	450	U	-	-	-	-
Di-n-octylphthalate	450	U	-	-	-	-
Fluoranthene	450	U	-	-	-	-

DRAFT

TABLE F-7B
(Continued)

Analyte	Sample No. PS-24-001 Boring 24-01 Result	Validation Qualifier	Sample No. PS-24-011 Boring 24-02 Result	Validation Qualifier	Sample No. PS-24-012 Boring 24-03 Result	Validation Qualifier
SEMIVOLATILES (μ/kg) (Continued)						
Fluorene	450	U	-	-	-	-
Hexachlorobenzene	450	J	-	-	-	-
Hexachlorobutadiene	450	U	-	-	-	-
Hexachlorocyclopentadiene	450	J	-	-	-	-
Hexachloroethane	450	U	-	-	-	-
Indeno(1,2,3-cd)pyrene	450	UJ	-	-	-	-
Isophorone	450	J	-	-	-	-
Naphthalene	450	U	-	-	-	-
Nitrobenzene	450	J	-	-	-	-
N-nitrosodiphenylamine	450	J	-	-	-	-
N-nitroso-di-n-propylamine	450	U	-	-	-	-
Pentachlorophenol	2300	U	-	-	-	-
Phenanthrene	450	U	-	-	-	-
Phenol	450	U	-	-	-	-
Pyrene	450	U	-	-	-	-
PCBs/PESTICIDES (μg/kg)						
4,4-dde	-	-	94	U	19	U
Aldrin	-	-	47	U	9.4	U
Alpha-bhc	-	-	47	U	9.4	U
Aroclor 1016	-	-	470	U	94	U
Aroclor 1221	-	-	470	U	94	U
Aroclor 1232	-	-	470	U	94	U
Aroclor 1242	-	-	470	U	94	U
Aroclor 1248	-	-	470	U	94	U

DRAFT

TABLE F-7B
(Continued)

Analyte	Sample No. PS-24-001 Boring 24-01 Result	Validation Qualifier	Sample No. PS-24-011 Boring 24-02 Result	Validation Qualifier	Sample No. PS-24-012 Boring 24-03 Result	Validation Qualifier
PCBs/PESTICIDES (µg/kg) (Continued)						
Aroclor 1254	-	-	510	J	39	J
Aroclor 1260	-	-	940	U	190	U
Beta-bhc	-	-	47	U	9.4	U
Chlordane	-	-	470	U	94	U
Delta-bhc	-	-	47	U	9.4	U
Dieldrin	-	-	94	U	19	U
Endosulfan I	-	-	47	U	9.4	U
Endosulfan II	-	-	94	U	19	U
Endosulfan sulfate	-	-	94	U	19	U
Endrin	-	-	94	U	19	U
Endrin ketone	-	-	94	U	19	U
Heptachlor	-	-	47	U	9.4	U
Heptachlor epoxide	-	-	47	U	9.4	U
Methoxychlor	-	-	470	U	94	U
Toxaphene	-	-	940	U	190	U

DRAFT

TABLE F-7B
(Continued)

Analyte	Sample No. PS-24-014 Boring 24-04 Result	Validation Qualifier	Sample No. PS-24-017 Boring 24-06 Result	Validation Qualifier	Sample No. PS-24-043 Boring 24-05 Result	Validation Qualifier
INORGANICS (mg/kg)						
Aluminum	6670	J	8590	J	10400	J
Antimony	0.3	J	0.3	J	0.3	J
Arsenic	4.4	J	4.7	J	4.9	J
Barium	51		91		48	
Beryllium	0.2	J	0.4	J	0.2	J
Cadmium	2.1	J	3.3		3.1	J
Calcium	61600		32700		4080	
Chromium	9.4	J	12		15	J
Cobalt	6.8	J	15		9.8	J
Copper	9.6	J	19		11	J
Cyanide	0.6	U	0.6		0.6	U
Iron	511		469		348	
Lead	16	J	10		11	J
Magnesium	30300		19100		2830	
Manganese	462	J	1170		319	J
Mercury	0.4	J	0.1		0.1	UJ
Nickel	13	J	36		20	J
Potassium	511		469		348	
Selenium	0.4	J	0.3		0.3	J

DRAFT

TABLE F-7B
(Continued)

Analyte	Sample No. PS-24-014 Boring 24-04 Result	Validation Qualifier	Sample No. PS-24-017 Boring 24-06 Result	Validation Qualifier	Sample No. PS-24-043 Boring 24-05 Result	Validation Qualifier
INORGANICS (mg/kg) (Continued)						
Silver	1.4	U	1.4	U	1.4	U
Sodium	66	U	63	U	64	U
Thallium	0.2	J	0.2	J	0.2	J
Vanadium	16		19		17	
Zinc	34	J	44	J	40	J
PCBs/PESTICIDES (µg/kg)						
4,4-dde	35	U	19	U	38	
4,4-ddt						
Aldrin	17	U	9.7	U	19	
Alpha-bhc	17	U	9.7	U	19	
Aroclor 1016	170	U	97	U	190	
Aroclor 1221	170	U	97	U	190	
Aroclor 1232	170	U	97	U	190	
Aroclor 1242	170	U	97	U	190	
Aroclor 1248	170	U	360		190	
Aroclor 1254	670		190	U	130	
Aroclor 1260	350	U	190	U	380	
Beta-bhc	17	U	9.7	U	19	
Chlordane	170	U	97	U	190	
Delta-bhc	17	U	9.7	U	19	
Dieldrin	35	U	19	U	38	
Endosulfan I	17	U	9.7	U	19	
Endosulfan II	35	U	19	U	38	
Endosulfan sulfate	35	U	19	U	38	

TABLE F-7B
(Continued)

Analyte	Sample No. PS-24-014 Boring 24-04 Result	Validation Qualifier	Sample No. PS-24-017 Boring 24-06 Result	Validation Qualifier	Sample No. PS-24-043 Boring 24-05 Result	Validation Qualifier
PCBs/PESTICIDES (µg/kg) (Continued)						
Endrin	35	U	19	U	38	
Endrin ketone	35	U	19	U	38	
Heptachlor	17	U	9.7	U	19	
Heptachlor epoxide	17	U	9.7	U	19	
Methoxychlor	170	U	97	U	190	
Toxaphene	350	U	190	U	380	

DRAFT

0764

5174

TABLE F-7B
(Continued)

Analyte	Sample No. PS-24-066 Boring 24-08 Result	Validation Qualifier	Sample No. PS-24-095 Boring 24-09 Result	Validation Qualifier	Sample No. PS-24-167 Boring 24-12 Result	Validation Qualifier
INORGANICS (mg/kg)						
Aluminum	-	-	7410	J	8160	
Antimony	-	-	0.3	UJ	0.3	UJ
Arsenic	-	-	5.6	UJ	5.9	J
Barium	-	-	39	J	78	
Beryllium	-	-	0.41	J	0.7	B
Cadmium	-	-	3.7		3.4	
Calcium	-	-	187000	J	74400	J
Chromium	-	-	14	J	18	
Cobalt	-	-	7.8	J	9.9	J
Copper	-	-	10		12	
Cyanide	-	-	0.6	UJ	0.6	U
Iron	-	-	14100		18800	J
Lead	-	-	16		17	J
Magnesium	-	-	14700	J	19300	
Manganese	-	-	442	J	832	J
Mercury	-	-	0.2		0.1	J
Nickel	-	-	10		14	
Potassium	-	-	818		1020	
Selenium	-	-	0.3	U	0.4	J

DRAFT

TABLE F-7B
(Continued)

Analyte	Sample No. PS-24-066 Boring 24-08 Result	Validation Qualifier	Sample No. PS-24-095 Boring 24-09 Result	Validation Qualifier	Sample No. PS-24-167 Boring 24-12 Result	Validation Qualifier
INORGANICS (mg/kg) (Continued)						
Silver	-	-	1.4	U	1.5	UJ
Sodium	-	-	102	J	65	U
Thallium	-	-	0.2	U	0.2	J
Vanadium	-	-	19		26	
Zinc	-	-	43	J	49	
VOLATILES (µg/kg)						
1,1,1-Trichloroethane	170	U	-	-	-	-
1,1,2,2-Tetrachloroethane	170	U	-	-	-	-
1,1,2-Trichloroethane	170	U	-	-	-	-
1,1-Dichloroethane	170	U	-	-	-	-
1,1-Dichloroethene	170	U	-	-	-	-
1,2-Dichloroethane	170	U	-	-	-	-
1,2-Dichloropropane	170	U	-	-	-	-
1,3-Dichloropropene	170	U	-	-	-	-
1,3-Dichloropropylene	ND		-	-	-	-
2-Butanone	340	R	-	-	-	-
2-Chloroethyl vinyl ether	340	UJ	-	-	-	-
2-Hexanone	340	J	-	-	-	-
4-Methyl-2-pentanone	340	U	-	-	-	-
Acetone	170	UJ	-	-	-	-
Acrolein	ND	R	-	-	-	-
Acrylonitrile	ND	R	-	-	-	-
Benzene	170	U	-	-	-	-

0766
5174

TABLE F-7B
(Continued)

Analyte	Sample No. PS-24-066 Boring 24-08 Result	Validation Qualifier	Sample No. PS-24-095 Boring 24-09 Result	Validation Qualifier	Sample No. PS-24-167 Boring 24-12 Result	Validation Qualifier
VOLATILES (µg/kg) (Continued)						
Bis(chloromethyl)ether	ND	R	-	-	-	-
Bromodichloromethane	170	U	-	-	-	-
Bromoform	170	U	-	-	-	-
Bromomethane	340	J	-	-	-	-
Carbon disulfide	170	U	-	-	-	-
Carbon tetrachloride	170	U	-	-	-	-
Chlorobenzene	170	U	-	-	-	-
Chloroethane	340	J	-	-	-	-
Chloroform	170	U	-	-	-	-
Chloromethane	340	J	-	-	-	-
Cis-1,2-dichloroethylene	ND		-	-	-	-
Dibromochloromethane	170	U	-	-	-	-
Dichlorodifluoromethane	ND	R	-	-	-	-
Ethylbenzene	170	U	-	-	-	-
Methylene chloride	170	U	-	-	-	-
Styrene	170	U	-	-	-	-
Tetrachloroethene	170	U	-	-	-	-
Toluene	170	U	-	-	-	-
Total xylene	170	U	-	-	-	-
Trans-1,2-dichloroethene	170	U	-	-	-	-
Trichloroethene	170	U	-	-	-	-
Vinyl acetate	340	U	-	-	-	-
Vinyl chloride	340	U	-	-	-	-

TABLE F-7B
(Continued)

Analyte	Sample No. PS-24-066 Boring 24-08 Result	Validation Qualifier	Sample No. PS-24-095 Boring 24-09 Result	Validation Qualifier	Sample No. PS-24-167 Boring 24-12 Result	Validation Qualifier
PCBs/PESTICIDES (µg/kg)						
4,4-DDE	-	-	18	U	20	U
Aldrin	-	-	9.2	U	10	U
Alpha-bhc	-	-	9.2	U	10	U
Aroclor 1016	-	-	92	U	100	U
Aroclor 1221	-	-	92	U	100	U
Aroclor 1232	-	-	92	U	100	U
Aroclor 1242	-	-	42	J	100	U
Aroclor 1248	-	-	92	U	100	U
Aroclor 1254	-	-	180	U	200	U
Aroclor 1260	-	-	250		28	J
Beta-bhc	-	-	9.2	U	10	U
Chlordane	-	-	92	U	100	U
Delta-bhc	-	-	9.2	U	10	U
Dieldrin	-	-	18	U	20	U
Endosulfan I	-	-	9.2	U	10	U
Endosulfan II	-	-	18	U	20	U
Endosulfan sulfate	-	-	18	U	20	U
Endrin	-	-	18	UJ	20	U
Endrin ketone	-	-	18	U	20	U
Heptachlor	-	-	9.2	U	10	U
Heptachlor epoxide	-	-	9.2	U	10	U
Methoxychlor	-	-	92	U	100	U
Toxaphene	-	-	180	U	200	U

0768

5174

TABLE F-7B
(Continued)

Analyte	Sample No. PS-24-068 Boring 24-07	
	Result	Validation Qualifier
PCBs/PESTICIDES (µg/kg)		
4-DDD	20	U
4,4-DDE	20	U
4-DDT	20	U
Aldrin	10	U
Alpha-bhc	10	U
Aroclor 1016	98	U
Aroclor 1221	98	U
Aroclor 1232	98	U
Aroclor 1242	76	U
Aroclor 1248	98	U
Aroclor 1254	200	U
Aroclor 1260	420	B
Beta-bhc	10	U
Chlordane	98	U
Delta-bhc	10	U
Dieldrin	20	U
Endosulfan I	10	U
Endosulfan II	20	U
Endosulfan sulfate	20	U
Endrin	20	U
Endrin ketone	20	U
Heptachlor	10	U
Heptachlor epoxide	10	U
Lindane	10	U
Methoxychlor	98	U
Toxaphene	200	U

DRAFT

TABLE F-8

SOUTH FIELD
SUBSURFACE MEDIA ENVIRONMENTAL SURVEY
OPERABLE UNIT 2 REMEDIAL INVESTIGATION
FERNALD ENVIRONMENTAL MANAGEMENT PROJECT

Analyte	Test Pit 14		Test Pit 15			Test Pit 16		Test Pit 17	
	1011IS1B	1011IS2B	1012IS1B	1012IS2B	1012IS3B	1013IS1B	1013IS2B	1014IS1B	1014IS2B
RADIONUCLIDES (pCi/g)									
Bismuth-214	3.2±0.1	1.0±0.1	1.1±0.1	1.2±0.1	NA	1.1±0.1	1.4±0.1	1.7±0.1	1.5±0.1
Cesium-137	I	I	I	I	NA	I	I	I	I
Radium-226	3.6±0.2G	0.94±0.1G	1.1±0.1G	1.3±0.1G	NA	1.1±0.1G	1.4±0.1G	1.7±0.1G	1.4±0.1G
Thorium-228	1.1±0.1G	1.0±0.2G	1.6±0.1G	2.4±0.1G	NA	1.2±0.1G	1.4±0.1G	1.1±0.1G	0.91±0.05G
Thorium-232	1.2±0.3G	1.4±0.2G	1.5±0.1G	2.5±0.2G	NA	0.84±0.05G	1.3±0.1G	1.3±0.1G	0.9±0.06G
Total Uranium (mg/kg)	71.0	2.1	15.0	56.0	NA	85.0	2.9	14.0	12.0
Uranium-235	0.83±0.02	0.14±0.02	0.16±0.01	0.30	NA	0.63±0.01	0.07±0.01	0.19±0.01	0.15±0.01
Uranium-238	46±5	N	N	20±4	NA	49±3	N	12±3	9±2
TCLP METALS (mg/L)									
Arsenic	<0.5	<0.5	<0.5	<0.5	NA	<0.5	<0.5	<0.5	<0.5
Barium	0.53B	0.60B	0.25B	0.65B	NA	0.70B	0.43B	0.54B	0.49B
Cadmium	<0.02	<0.02	<0.02	<0.02	NA	<0.02	<0.02	<0.02	<0.02
Chromium	<0.03	<0.03	<0.03	<0.03	NA	0.05	<0.03	<0.03	<0.03
Mercury	<0.001	<0.001	<0.001	<0.001	NA	<0.001	<0.001	<0.001	<0.001
Lead	<0.3	<0.3	<0.3	<0.3	NA	<0.3	<0.3	<0.3	<0.3
Selenium	<0.5	<0.5	<0.5	<0.5	NA	<0.5	<0.5	<0.5	<0.5
Silver	<0.1	<0.1	<0.1	<0.1	NA	<0.1	<0.1	<0.1	<0.1
VOLATILE ORGANIC COMPOUNDS (µg/kg)									
1,1,1-Trichloroethane	NA	NA	NA	NA	<5	NA	NA	NA	NA
1,1,2,2-Tetrachloroethane	NA	NA	NA	NA	<5	NA	NA	NA	NA

See notes at end of table

5124

TABLE F-8
(Continued)

Analyte	Test Pit 14		Test Pit 15			Test Pit 16		Test Pit 17	
	1011IS1B	1011IS2B	1012IS1B	1012IS2B	1012IS3B	1013IS1B	1013IS2B	1014IS1B	1014IS2B
VOLATILE ORGANIC COMPOUNDS (µg/kg) (continued)									
1,1,2-Trichloroethane	NA	NA	NA	NA	<5	NA	NA	NA	NA
1,1-Dichloroethane	NA	NA	NA	NA	<5	NA	NA	NA	NA
1,1-Dichloroethene	NA	NA	NA	NA	<5	NA	NA	NA	NA
1,2-Dichloroethene	NA	NA	NA	NA	<5	NA	NA	NA	NA
1,2-Dichloroethane	NA	NA	NA	NA	<5	NA	NA	NA	NA
2-Butanone	NA	NA	NA	NA	4 BJ	NA	NA	NA	NA
2-Chloroethylvinyl Ether	NA	NA	NA	NA	<10	NA	NA	NA	NA
2-Hexanone	NA	NA	NA	NA	<10	NA	NA	NA	NA
4-Methyl-2-pentanone	NA	NA	NA	NA	<10	NA	NA	NA	NA
Acetone	NA	NA	NA	NA	22	NA	NA	NA	NA
Benzene	NA	NA	NA	NA	<5	NA	NA	NA	NA
Bromodichloromethane	NA	NA	NA	NA	<5	NA	NA	NA	NA
Bromoform	NA	NA	NA	NA	<5	NA	NA	NA	NA
Bromomethane	NA	NA	NA	NA	<10	NA	NA	NA	NA
Carbon disulfide	NA	NA	NA	NA	<5	NA	NA	NA	NA
Carbon tetrachloride	NA	NA	NA	NA	<5	NA	NA	NA	NA
Chlorobenzene	NA	NA	NA	NA	<5	NA	NA	NA	NA
Chloroform	NA	NA	NA	NA	6 B	NA	NA	NA	NA
Chloromethane	NA	NA	NA	NA	<10	NA	NA	NA	NA
Cis-1,3-dichloropropane	NA	NA	NA	NA	<5	NA	NA	NA	NA
Dibromochloromethane	NA	NA	NA	NA	<5	NA	NA	NA	NA
Ethylbenzene	NA	NA	NA	NA	<5	NA	NA	NA	NA
Methylene Chloride	NA	NA	NA	NA	12 B	NA	NA	NA	NA

See notes at end of table

TABLE F-8
(Continued)

Analyte	Test Pit 14		Test Pit 15			Test Pit 16		Test Pit 17	
	1011IS1B	1011IS2B	1012IS1B	1012IS2B	1012IS3B	1013IS1B	1013IS2B	1014IS1B	1014IS2B
VOLATILE ORGANIC COMPOUNDS (µg/kg) (continued)									
Styrene	NA	NA	NA	NA	<5	NA	NA	NA	NA
Tetrachloroethene	NA	NA	NA	NA	<5	NA	NA	NA	NA
Toluene	NA	NA	NA	NA	2 BJ	NA	NA	NA	NA
Total xylenes	NA	NA	NA	NA	<5	NA	NA	NA	NA
Trans-1,2-dichloroethene	NA	NA	NA	NA	<5	NA	NA	NA	NA
Trans-1,3-dichloropropene	NA	NA	NA	NA	<5	NA	NA	NA	NA
Trichloroethene	NA	NA	NA	NA	<5	NA	NA	NA	NA
Vinyl acetate	NA	NA	NA	NA	<10	NA	NA	NA	NA
Vinyl chloride	NA	NA	NA	NA	<10	NA	NA	NA	NA

NA = Not Analyzed
J = Estimated value of compound present but less than the specified detection limit
B = Analyte was found in the blank as well as the sample
I = Nuclide identified by GAMANAL analysis of sample spectrum, but values did not exceed room background at the 95% confidence level; no value reported
G = Gamma Spectroscopy Analysis

0779

FEMP-OU02-4 DRAFT
February 18, 1994
5174

TABLE F-9

SOUTH FIELD
RI/FS SEDIMENT RESULTS
OPERABLE UNIT 2 REMEDIAL INVESTIGATION
FERNALD ENVIRONMENTAL MANAGEMENT PROJECT

PHASE II - RADIOLOGICAL PARAMETERS

BORING NUMBER	SF-SD-01			SF-SD-02			SF-SD-03		
SAMPLE NUMBER	110425			110430			110428		
SAMPLING DATE	03/24/93			03/25/93			03/25/93		
RADIOLOGICAL PARAMETERS	RESULTS	UNITS	VQ	RESULTS	UNITS	VQ	RESULTS	UNITS	VQ
CS-137	0.258	pci/g	-	0.400	pci/g	-	0.130	pci/g	UJ
GROSS ALPHA	29.100	pci/g	-	33.500	pci/g	-	61.400	pci/g	-
GROSS BETA	58.200	pci/g	J	32.600	pci/g	-	36.200	pci/g	-
NP-237	0.323	pci/g	N	0.280	pci/g	N	0.420	pci/g	N
PU-238	0.057	pci/g	J	0.100	pci/g	J	1.900	pci/g	-
PU-239/240	0.067	pci/g	J	0.020	pci/g	UJ	0.370	pci/g	J
RA-226	1.680	pci/g	-	1.570	pci/g	-	2.960	pci/g	-
RA-228	1.240	pci/g	-	0.930	pci/g	-	2.530	pci/g	-
RU-106	0.652	pci/g	UJ	0.600	pci/g	UJ	0.940	pci/g	UJ
SR-90	0.546	pci/g	J	0.430	pci/g	UJ	1.010	pci/g	J
TC-99	0.356	pci/g	UJ	0.320	pci/g	UJ	0.220	pci/g	UJ
TH-228	1.030	pci/g	-	1.060	pci/g	-	2.800	pci/g	-
TH-230	1.830	pci/g	-	8.960	pci/g	-	4.910	pci/g	-
TH-232	1.040	pci/g	-	0.870	pci/g	-	2.570	pci/g	-
TH-TOTAL	9.450	ug/g	-	7.930	ug/g	-	23.400	ug/g	-
U-234	3.620	pci/g	-	5.130	pci/g	-	7.950	pci/g	-
U-235/236	0.255	pci/g	J	0.290	pci/g	J	0.410	pci/g	J
U-238	5.210	pci/g	-	6.210	pci/g	-	8.750	pci/g	-
U-TOTAL	15.200	mg/kg	-	20.000	mg/kg	J	30.100	mg/kg	J

0773

5174

TABLE F-9
(Continued)

PHASE II - CHEMICAL PARAMETERS

BORING NUMBER	SF-SD-01			SF-SD-03			SF-SD-02		
SAMPLE NUMBER	110425			110428			110430		
SAMPLING DATE	03/24/93			03/25/93			03/25/93		
CHEMICAL PARAMETERS	RESULTS	UNITS	L VQ	RESULTS	UNITS	L VQ	RESULTS	UNITS	L VQ
Inorganics									
Aluminum	5750.000	mg/kg	C J	8720.000	mg/kg	C J	12000.000	mg/kg	C J
Antimony	1.200	mg/kg	C UJ	1.600	mg/kg	C UJ	1.300	mg/kg	C UJ
Arsenic	7.700	mg/kg	C -	75.600	mg/kg	C -	8.000	mg/kg	C -
Barium	52.900	mg/kg	C -	212.000	mg/kg	C -	109.000	mg/kg	C -
Beryllium	0.460	mg/kg	C U	4.600	mg/kg	C -	1.100	mg/kg	C -
Cadmium	1.200	mg/kg	C U	1.600	mg/kg	C U	1.300	mg/kg	C U
Calcium	22400.000	mg/kg	C J	19300.000	mg/kg	C J	83500.000	mg/kg	C J
Chromium	6.800	mg/kg	C -	19.200	mg/kg	C -	15.700	mg/kg	C -
Cobalt	3.700	mg/kg	C -	19.400	mg/kg	C -	11.000	mg/kg	C -
Copper	8.000	mg/kg	C -	122.000	mg/kg	C -	25.400	mg/kg	C -
Cyanide	0.180	mg/kg	C -	0.540	mg/kg	C -	0.160	mg/kg	C U
Iron	10400.000	mg/kg	C J	10100.000	mg/kg	C J	22300.000	mg/kg	C J
Lead	27.000	mg/kg	C -	91.500	mg/kg	C -	50.800	mg/kg	C -
Magnesium	6460.000	mg/kg	C -	4510.000	mg/kg	C -	20200.000	mg/kg	C -
Manganese	476.000	mg/kg	C J	236.000	mg/kg	C J	896.000	mg/kg	C J
Mercury	0.140	mg/kg	C U	0.190	mg/kg	C -	0.160	mg/kg	C U
Molybdenum	4.600	mg/kg	C UJ	6.300	mg/kg	C UJ	6.300	mg/kg	C J
Nickel	7.100	mg/kg	C -	36.400	mg/kg	C -	26.400	mg/kg	C -
Potassium	597.000	mg/kg	C -	1920.000	mg/kg	C -	1460.000	mg/kg	C -
Selenium	0.860	mg/kg	C -	5.900	mg/kg	C -	0.550	mg/kg	C U
Silicon	640.000	mg/kg	C J	1250.000	mg/kg	C J	1670.000	mg/kg	C J
Silver	2.900	mg/kg	C -	3.200	mg/kg	C U	6.500	mg/kg	C -
Sodium	67.100	mg/kg	C -	237.000	mg/kg	C -	155.000	mg/kg	C -
Thallium	0.610	mg/kg	C U	4.400	mg/kg	C -	0.550	mg/kg	C U
Vanadium	15.300	mg/kg	C -	53.600	mg/kg	C -	32.000	mg/kg	C -
Zinc	24.900	mg/kg	C J	118.000	mg/kg	C J	68.700	mg/kg	C J
Volatile Organics									
1,1,1-Trichloroethane	15.000	ug/kg	C U	18.000	ug/kg	C UJ	16.000	ug/kg	C U
1,1,2,2-Tetrachloroethane	15.000	ug/kg	C U	18.000	ug/kg	C UJ	16.000	ug/kg	C U
1,1,2-Trichloroethane	15.000	ug/kg	C U	18.000	ug/kg	C UJ	16.000	ug/kg	C U
1,1-Dichloroethane	15.000	ug/kg	C U	18.000	ug/kg	C UJ	16.000	ug/kg	C U
1,1-Dichloroethene	15.000	ug/kg	C U	18.000	ug/kg	C UJ	16.000	ug/kg	C U
1,2-Dichloroethane	15.000	ug/kg	C U	18.000	ug/kg	C UJ	16.000	ug/kg	C U
1,2-Dichloroethene	15.000	ug/kg	C U	18.000	ug/kg	C UJ	16.000	ug/kg	C U
1,2-Dichloropropane	15.000	ug/kg	C U	18.000	ug/kg	C UJ	16.000	ug/kg	C U
2-Butanone	15.000	ug/kg	C U	18.000	ug/kg	C UJ	16.000	ug/kg	C U
2-Hexanone	15.000	ug/kg	C UJ	18.000	ug/kg	C UJ	16.000	ug/kg	C UJ
4-Methyl-2-pentanone	15.000	ug/kg	C UJ	18.000	ug/kg	C UJ	16.000	ug/kg	C UJ
Acetone	15.000	ug/kg	C U	18.000	ug/kg	C UJ	16.000	ug/kg	C U
Benzene	15.000	ug/kg	C U	18.000	ug/kg	C UJ	16.000	ug/kg	C U

TABLE F-9
(Continued)

PHASE II - CHEMICAL PARAMETERS

BORING NUMBER	SF-SD-01			SF-SD-03			SF-SD-02		
SAMPLE NUMBER	110425			110428			110430		
SAMPLING DATE	03/24/93			03/25/93			03/25/93		
CHEMICAL PARAMETERS	RESULTS	UNITS	L VQ	RESULTS	UNITS	L VQ	RESULTS	UNITS	L VQ
Volatile Organics									
Bromodichloromethane	15.000	ug/kg	C U	18.000	ug/kg	C UJ	16.000	ug/kg	C U
Bromoform	15.000	ug/kg	C U	18.000	ug/kg	C UJ	16.000	ug/kg	C U
Bromomethane	15.000	ug/kg	C U	18.000	ug/kg	C UJ	16.000	ug/kg	C U
Carbon Tetrachloride	15.000	ug/kg	C U	18.000	ug/kg	C UJ	16.000	ug/kg	C U
Carbon disulfide	15.000	ug/kg	C U	18.000	ug/kg	C UJ	16.000	ug/kg	C U
Chlorobenzene	15.000	ug/kg	C U	18.000	ug/kg	C UJ	16.000	ug/kg	C U
Chloroethane	15.000	ug/kg	C U	18.000	ug/kg	C UJ	16.000	ug/kg	C U
Chloroform	15.000	ug/kg	C U	18.000	ug/kg	C UJ	16.000	ug/kg	C U
Chloromethane	15.000	ug/kg	C U	18.000	ug/kg	C UJ	16.000	ug/kg	C U
Dibromochloromethane	15.000	ug/kg	C U	18.000	ug/kg	C UJ	16.000	ug/kg	C U
Ethylbenzene	15.000	ug/kg	C U	18.000	ug/kg	C UJ	16.000	ug/kg	C U
Methylene chloride	15.000	ug/kg	C U	18.000	ug/kg	C UJ	18.000	ug/kg	C U
Styrene	15.000	ug/kg	C U	18.000	ug/kg	C UJ	16.000	ug/kg	C U
Tetrachloroethene	15.000	ug/kg	C U	18.000	ug/kg	C UJ	16.000	ug/kg	C U
Toluene	15.000	ug/kg	C U	8.000	ug/kg	C J	16.000	ug/kg	C U
Trichloroethene	15.000	ug/kg	C U	18.000	ug/kg	C UJ	16.000	ug/kg	C U
Vinyl Acetate	15.000	ug/kg	C U	18.000	ug/kg	C UJ	16.000	ug/kg	C U
Vinyl chloride	15.000	ug/kg	C UJ	18.000	ug/kg	C UJ	16.000	ug/kg	C UJ
Xylenes, Total	15.000	ug/kg	C U	18.000	ug/kg	C UJ	16.000	ug/kg	C U
cis-1,3-Dichloropropene	15.000	ug/kg	C U	18.000	ug/kg	C UJ	16.000	ug/kg	C U
trans-1,3-Dichloropropene	15.000	ug/kg	C U	18.000	ug/kg	C UJ	16.000	ug/kg	C U
Semivolatile Organics									
1,2,4-Trichlorobenzene	510.000	ug/kg	C U	610.000	ug/kg	C U	540.000	ug/kg	C U
1,2-Dichlorobenzene	510.000	ug/kg	C U	610.000	ug/kg	C U	540.000	ug/kg	C U
1,2-Diphenylhydrazine	510.000	ug/kg	C UJ	610.000	ug/kg	C U	540.000	ug/kg	C U
1,3-Dichlorobenzene	510.000	ug/kg	C U	610.000	ug/kg	C U	540.000	ug/kg	C U
1,4-Dichlorobenzene	510.000	ug/kg	C U	610.000	ug/kg	C U	540.000	ug/kg	C U
2,4,5-Trichlorophenol	2500.000	ug/kg	C U	1500.000	ug/kg	C U	1300.000	ug/kg	C U
2,4,6-Trichlorophenol	510.000	ug/kg	C U	610.000	ug/kg	C U	540.000	ug/kg	C U
2,4-Dichlorophenol	510.000	ug/kg	C U	610.000	ug/kg	C U	540.000	ug/kg	C U
2,4-Dimethylphenol	510.000	ug/kg	C U	610.000	ug/kg	C U	540.000	ug/kg	C U
2,4-Dinitrophenol	2500.000	ug/kg	C UJ	2900.000	ug/kg	C R	2600.000	ug/kg	C R
2,4-Dinitrotoluene	510.000	ug/kg	C U	610.000	ug/kg	C U	540.000	ug/kg	C U
2,6-Dinitrotoluene	510.000	ug/kg	C U	610.000	ug/kg	C U	540.000	ug/kg	C U
2-Chloronaphthalene	510.000	ug/kg	C U	610.000	ug/kg	C U	540.000	ug/kg	C U
2-Chlorophenol	510.000	ug/kg	C U	610.000	ug/kg	C U	540.000	ug/kg	C U
2-Methylnaphthalene	510.000	ug/kg	C U	610.000	ug/kg	C U	540.000	ug/kg	C U
2-Methylphenol	510.000	ug/kg	C U	610.000	ug/kg	C U	540.000	ug/kg	C U
2-Nitroaniline	2500.000	ug/kg	C UJ	1500.000	ug/kg	C U	1300.000	ug/kg	C U
2-Nitrophenol	510.000	ug/kg	C UJ	610.000	ug/kg	C U	540.000	ug/kg	C U

0175

E 5174

TABLE F-9
(Continued)

PHASE II - CHEMICAL PARAMETERS

BORING NUMBER	SF-SD-01			SF-SD-03			SF-SD-02		
SAMPLE NUMBER	110425			110428			110430		
SAMPLING DATE	03/24/93			03/25/93			03/25/93		
CHEMICAL PARAMETERS	RESULTS	UNITS	L VQ	RESULTS	UNITS	L VQ	RESULTS	UNITS	L VQ
Semivolatile Organics									
3,3'-Dichlorobenzidine	510.000	ug/kg	C U	610.000	ug/kg	C U	540.000	ug/kg	C U
3-Nitroaniline	2500.000	ug/kg	C U	1500.000	ug/kg	C U	1300.000	ug/kg	C U
4,6-Dinitro-2-methylphenol	2500.000	ug/kg	C R	1500.000	ug/kg	C R	1300.000	ug/kg	C R
4-Bromophenyl phenyl ether	510.000	ug/kg	C U	610.000	ug/kg	C U	540.000	ug/kg	C U
4-Chloro-3-methylphenol	510.000	ug/kg	C U	610.000	ug/kg	C U	540.000	ug/kg	C U
4-Chlorophenylphenyl ether	510.000	ug/kg	C U	610.000	ug/kg	C U	540.000	ug/kg	C U
4-Methylphenol	510.000	ug/kg	C U	610.000	ug/kg	C U	540.000	ug/kg	C U
4-Nitroaniline	2500.000	ug/kg	C U	1500.000	ug/kg	C U	1300.000	ug/kg	C U
4-Nitrophenol	2500.000	ug/kg	C U	1500.000	ug/kg	C U	1300.000	ug/kg	C U
Acenaphthene	510.000	ug/kg	C U	610.000	ug/kg	C U	540.000	ug/kg	C U
Acenaphthylene	510.000	ug/kg	C U	610.000	ug/kg	C U	540.000	ug/kg	C U
Anthracene	510.000	ug/kg	C U	610.000	ug/kg	C U	540.000	ug/kg	C U
Benzo(a)anthracene	510.000	ug/kg	C U	610.000	ug/kg	C U	66.000	ug/kg	C J
Benzo(a)pyrene	64.000	ug/kg	C R	610.000	ug/kg	C U	110.000	ug/kg	C J
Benzo(b)fluoranthene	59.000	ug/kg	C R	610.000	ug/kg	C U	110.000	ug/kg	C J
Benzo(g,h,i)perylene	60.000	ug/kg	C R	610.000	ug/kg	C U	120.000	ug/kg	C J
Benzo(k)fluoranthene	71.000	ug/kg	C R	74.000	ug/kg	C J	120.000	ug/kg	C J
Benzoic acid	2500.000	ug/kg	C UJ	99.000	ug/kg	C J	160.000	ug/kg	C J
Benzyl alcohol	510.000	ug/kg	C UJ	610.000	ug/kg	C U	540.000	ug/kg	C U
Butyl benzyl phthalate	510.000	ug/kg	C U	610.000	ug/kg	C U	540.000	ug/kg	C U
Carbazole	510.000	ug/kg	C U	610.000	ug/kg	C U	540.000	ug/kg	C U
Chrysene	87.000	ug/kg	C J	67.000	ug/kg	C J	110.000	ug/kg	C J
Di-n-butyl phthalate	510.000	ug/kg	C U	610.000	ug/kg	C U	540.000	ug/kg	C U
Di-n-octyl phthalate	510.000	ug/kg	C R	610.000	ug/kg	C U	540.000	ug/kg	C U
Dibenzo(a,h)anthracene	510.000	ug/kg	C R	610.000	ug/kg	C U	540.000	ug/kg	C U
Dibenzofuran	510.000	ug/kg	C U	610.000	ug/kg	C U	540.000	ug/kg	C U
Diethyl phthalate	510.000	ug/kg	C U	610.000	ug/kg	C U	540.000	ug/kg	C U
Dimethyl phthalate	510.000	ug/kg	C U	610.000	ug/kg	C U	540.000	ug/kg	C U
Fluoranthene	130.000	ug/kg	C J	74.000	ug/kg	C J	120.000	ug/kg	C J
Fluorene	510.000	ug/kg	C U	610.000	ug/kg	C U	540.000	ug/kg	C U
Hexachlorobenzene	510.000	ug/kg	C U	610.000	ug/kg	C U	540.000	ug/kg	C U
Hexachlorobutadiene	510.000	ug/kg	C U	610.000	ug/kg	C U	540.000	ug/kg	C U
Hexachlorocyclopentadiene	510.000	ug/kg	C U	610.000	ug/kg	C U	540.000	ug/kg	C U
Hexachloroethane	510.000	ug/kg	C U	610.000	ug/kg	C U	540.000	ug/kg	C U
Indeno(1,2,3-cd)pyrene	510.000	ug/kg	C R	610.000	ug/kg	C U	99.000	ug/kg	C J
Isophorone	510.000	ug/kg	C U	610.000	ug/kg	C U	540.000	ug/kg	C U
N-Nitroso-di-n-propylamine	510.000	ug/kg	C U	610.000	ug/kg	C U	540.000	ug/kg	C U
N-Nitrosodimethylamine	510.000	ug/kg	C U	610.000	ug/kg	C U	540.000	ug/kg	C U
N-Nitrosodiphenylamine	510.000	ug/kg	C U	610.000	ug/kg	C U	540.000	ug/kg	C U
Naphthalene	510.000	ug/kg	C U	610.000	ug/kg	C U	540.000	ug/kg	C U
Nitrobenzene	510.000	ug/kg	C U	610.000	ug/kg	C U	540.000	ug/kg	C U
Pentachlorophenol	2500.000	ug/kg	C U	1500.000	ug/kg	C U	1300.000	ug/kg	C U

TABLE F-9
(Continued)

PHASE II - CHEMICAL PARAMETERS

BORING NUMBER	SF-SD-01				SF-SD-03				SF-SD-02			
SAMPLE NUMBER	110425				110428				110430			
SAMPLING DATE	03/24/93				03/25/93				03/25/93			
CHEMICAL PARAMETERS	RESULTS	UNITS	L	VQ	RESULTS	UNITS	L	VQ	RESULTS	UNITS	L	VQ
Semivolatile Organics												
Phenanthrene ..	63.000	ug/kg	C	J	610.000	ug/kg	C	U	540.000	ug/kg	C	U
Phenol	510.000	ug/kg	C	U	610.000	ug/kg	C	U	56.000	ug/kg	C	J
Pyrene	110.000	ug/kg	C	J	71.000	ug/kg	C	J	110.000	ug/kg	C	J
Tributyl phosphate	510.000	ug/kg	C	U	610.000	ug/kg	C	U	540.000	ug/kg	C	U
bis(2-Chloroethoxy)methane	510.000	ug/kg	C	U	610.000	ug/kg	C	U	540.000	ug/kg	C	U
bis(2-Chloroethyl)ether	510.000	ug/kg	C	U	610.000	ug/kg	C	U	540.000	ug/kg	C	U
bis(2-Chloroisopropyl) ether	510.000	ug/kg	C	U	610.000	ug/kg	C	U	540.000	ug/kg	C	U
bis(2-Ethylhexyl) phthalate	74.000	ug/kg	C	J	130.000	ug/kg	C	J	120.000	ug/kg	C	J
p-Chloroaniline	510.000	ug/kg	C	U	610.000	ug/kg	C	U	540.000	ug/kg	C	U
Pesticide Organics/PCBs												
4,4'-DDD	5.200	ug/kg	C	U	6.100	ug/kg	C	U	5.400	ug/kg	C	U
4,4'-DDE	5.200	ug/kg	C	U	6.100	ug/kg	C	U	5.400	ug/kg	C	U
4,4'-DDT	5.200	ug/kg	C	U	6.100	ug/kg	C	U	5.400	ug/kg	C	U
Aldrin	2.700	ug/kg	C	U	3.100	ug/kg	C	U	2.800	ug/kg	C	U
Aroclor-1016	52.000	ug/kg	C	U	61.000	ug/kg	C	U	54.000	ug/kg	C	U
Aroclor-1221	100.000	ug/kg	C	U	120.000	ug/kg	C	U	110.000	ug/kg	C	U
Aroclor-1232	52.000	ug/kg	C	U	61.000	ug/kg	C	U	54.000	ug/kg	C	U
Aroclor-1242	52.000	ug/kg	C	U	61.000	ug/kg	C	U	54.000	ug/kg	C	U
Aroclor-1248	52.000	ug/kg	C	U	61.000	ug/kg	C	U	54.000	ug/kg	C	U
Aroclor-1254	52.000	ug/kg	C	U	61.000	ug/kg	C	U	96.000	ug/kg	C	-
Aroclor-1260	52.000	ug/kg	C	U	61.000	ug/kg	C	U	54.000	ug/kg	C	U
Dieldrin	5.200	ug/kg	C	U	6.100	ug/kg	C	U	5.400	ug/kg	C	U
Endosulfan II	5.200	ug/kg	C	U	6.100	ug/kg	C	U	5.400	ug/kg	C	U
Endosulfan sulfate	5.200	ug/kg	C	U	6.100	ug/kg	C	U	5.400	ug/kg	C	U
Endosulfan-I	2.700	ug/kg	C	U	3.100	ug/kg	C	U	2.800	ug/kg	C	U
Endrin	5.200	ug/kg	C	U	6.100	ug/kg	C	U	5.400	ug/kg	C	U
Endrin aldehyde	5.200	ug/kg	C	U	6.100	ug/kg	C	U	5.400	ug/kg	C	U
Endrin ketone	5.200	ug/kg	C	U	6.100	ug/kg	C	U	5.400	ug/kg	C	U
Heptachlor	2.700	ug/kg	C	U	3.100	ug/kg	C	U	2.800	ug/kg	C	U
Heptachlor epoxide	2.700	ug/kg	C	U	3.100	ug/kg	C	U	2.800	ug/kg	C	U
Methoxychlor	27.000	ug/kg	C	U	31.000	ug/kg	C	U	28.000	ug/kg	C	U
Toxaphene	270.000	ug/kg	C	U	310.000	ug/kg	C	U	280.000	ug/kg	C	U
alpha-BHC	2.700	ug/kg	C	U	3.100	ug/kg	C	U	2.800	ug/kg	C	U
alpha-Chlordane	2.700	ug/kg	C	U	3.100	ug/kg	C	U	2.800	ug/kg	C	U
beta-BHC	2.700	ug/kg	C	U	3.100	ug/kg	C	U	2.800	ug/kg	C	U
delta-BHC	2.700	ug/kg	C	U	3.100	ug/kg	C	U	2.800	ug/kg	C	U
gamma-BHC (Lindane)	2.700	ug/kg	C	U	3.100	ug/kg	C	U	2.800	ug/kg	C	U
gamma-Chlordane	2.700	ug/kg	C	U	3.100	ug/kg	C	U	2.800	ug/kg	C	U

TABLE F-10

SOUTH FIELD
RI/FS SURFACE WATER RESULTS
OPERABLE UNIT 2 REMEDIAL INVESTIGATION
FERNALD ENVIRONMENTAL MANAGEMENT PROJECT

PHASE II - RADIOLOGICAL PARAMETERS

BORING NUMBER		SF-SW-01				SF-SW-02		
SAMPLE NUMBER		110422				110432		
SAMPLING DATE		03/24/93				03/25/93		
RADIOLOGICAL PARAMETERS	FLTD	RESULTS	UNITS	VQ	FLTD	RESULTS	UNITS	VQ
CS-137	UNFI	12.000	pci/L	UJ	UNFI	11.200	pci/L	UJ
GROSS ALPHA	UNFI	205.000	pci/L	-	UNFI	224.000	pci/L	-
GROSS BETA	UNFI	97.000	pci/L	J	UNFI	119.000	pci/L	-
NP-237	UNFI	0.153	pci/L	U	UNFI	0.220	pci/L	U
PU-238	UNFI	0.135	pci/L	UJ	UNFI	0.040	pci/L	UJ
PU-239/240	UNFI	0.111	pci/L	UJ	UNFI	0.060	pci/L	U
RA-226	UNFI	0.192	pci/L	UJ	UNFI	0.090	pci/L	U
RA-228	UNFI	2.400	pci/L	UJ	UNFI	1.530	pci/L	UJ
RU-106	UNFI	126.000	pci/L	UJ	UNFI	11.000	pci/L	UJ
SR-90	UNFI	1.260	pci/L	U	UNFI	1.370	pci/L	UJ
TC-99	UNFI	10.600	pci/L	UJ	UNFI	14.800	pci/L	UJ
TH-228	UNFI	0.417	pci/L	UJ	UNFI	0.190	pci/L	UJ
TH-230	UNFI	0.386	pci/L	UJ	UNFI	0.200	pci/L	UJ
TH-232	UNFI	0.253	pci/L	UJ	UNFI	0.130	pci/L	UJ
TH-TOTAL	UNFI	2.330	ug/L	UJ	UNFI	1.200	ug/L	UJ
U-234	UNFI	110.000	pci/L	-	UNFI	159.000	pci/L	-
U-235/236	UNFI	7.470	pci/L	-	UNFI	7.400	pci/L	-
U-238	UNFI	136.000	pci/L	-	UNFI	174.000	pci/L	-
U-TOTAL	UNFI	340.000	ug/L	-	UNFI	487.000	ug/L	-

0778

5174

TABLE F-10
(Continued)

PHASE II - CHEMICAL PARAMETERS

BORING NUMBER		SF-SW-01					SF-SW-02				
SAMPLE NUMBER		110422					110432				
SAMPLING DATE		03/24/93					03/25/93				
CHEMICAL PARAMETERS	FLTD	RESULTS	UNITS	L	VQ		FLTD	RESULTS	UNITS	L	VQ
Inorganics											
Aluminum	FILT	0.178	mg/L	C	-		FILT	0.183	mg/L	C	-
Antimony	FILT	0.005	mg/L	C	U		FILT	0.005	mg/L	C	UJ
Arsenic	FILT	0.002	mg/L	C	U		FILT	0.002	mg/L	C	U
Barium	FILT	0.050	mg/L	C	-		FILT	0.054	mg/L	C	-
Beryllium	FILT	0.002	mg/L	C	U		FILT	0.002	mg/L	C	U
Cadmium	FILT	0.005	mg/L	C	U		FILT	0.005	mg/L	C	U
Calcium	FILT	103.000	mg/L	C	-		FILT	109.000	mg/L	C	-
Chromium	FILT	0.010	mg/L	C	U		FILT	0.010	mg/L	C	U
Cobalt	FILT	0.010	mg/L	C	U		FILT	0.010	mg/L	C	U
Copper	FILT	0.010	mg/L	C	U		FILT	0.010	mg/L	C	U
Cyanide	UNFI	0.002	mg/L	C	U		UNFI	0.002	mg/L	C	U
Iron	FILT	0.020	mg/L	C	U		FILT	0.020	mg/L	C	U
Lead	FILT	0.002	mg/L	C	U		FILT	0.002	mg/L	C	U
Magnesium	FILT	30.000	mg/L	C	-		FILT	38.200	mg/L	C	-
Manganese	FILT	0.010	mg/L	C	U		FILT	0.010	mg/L	C	U
Mercury	FILT	0.000	mg/L	C	U		FILT	0.000	mg/L	C	U
Molybdenum	FILT	0.020	mg/L	C	U		FILT	0.020	mg/L	C	U
Nickel	FILT	0.020	mg/L	C	U		FILT	0.020	mg/L	C	U
Potassium	FILT	1.270	mg/L	C	-		FILT	1.050	mg/L	C	-
Selenium	FILT	0.002	mg/L	C	U		FILT	0.002	mg/L	C	U
Silicon	FILT	4.220	mg/L	C	-		FILT	5.840	mg/L	C	-
Silver	FILT	0.010	mg/L	C	U		FILT	0.010	mg/L	C	U
Sodium	FILT	4.260	mg/L	C	-		FILT	5.050	mg/L	C	-
Thallium	FILT	0.002	mg/L	C	U		FILT	0.002	mg/L	C	U
Vanadium	FILT	0.010	mg/L	C	U		FILT	0.010	mg/L	C	U
Zinc	FILT	0.005	mg/L	C	U		FILT	0.005	mg/L	C	U
Volatile Organics											
1,1,1-Trichloroethane	UNFI	10.000	ug/L	C	U		UNFI	10.000	ug/L	C	U
1,1,2,2-Tetrachloroethane	UNFI	10.000	ug/L	C	U		UNFI	10.000	ug/L	C	U
1,1,2-Trichloroethane	UNFI	10.000	ug/L	C	U		UNFI	10.000	ug/L	C	U
1,1-Dichloroethane	UNFI	10.000	ug/L	C	U		UNFI	10.000	ug/L	C	U
1,1-Dichloroethene	UNFI	10.000	ug/L	C	U		UNFI	10.000	ug/L	C	U
1,2-Dichloroethane	UNFI	10.000	ug/L	C	U		UNFI	10.000	ug/L	C	U
1,2-Dichloroethene	UNFI	10.000	ug/L	C	U		UNFI	10.000	ug/L	C	U
1,2-Dichloropropane	UNFI	10.000	ug/L	C	U		UNFI	10.000	ug/L	C	U
2-Butanone	UNFI	10.000	ug/L	C	U		UNFI	10.000	ug/L	C	U
2-Hexanone	UNFI	10.000	ug/L	C	U		UNFI	10.000	ug/L	C	U
4-Methyl-2-pentanone	UNFI	10.000	ug/L	C	U		UNFI	10.000	ug/L	C	U
Acetone	UNFI	10.000	ug/L	C	U		UNFI	10.000	ug/L	C	U
Benzene	UNFI	10.000	ug/L	C	U		UNFI	10.000	ug/L	C	U

TABLE F-10
(Continued)

PHASE II - CHEMICAL PARAMETERS

BORING NUMBER		SF-SW-01					SF-SW-02				
SAMPLE NUMBER		110422					110432				
SAMPLING DATE		03/24/93					03/25/93				
CHEMICAL PARAMETERS	FLTD	RESULTS	UNITS	L	VQ		FLTD	RESULTS	UNITS	L	VQ
Volatile Organics											
Bromodichloromethane	UNFI	10.000	ug/L	C	U		UNFI	10.000	ug/L	C	U
Bromoform	UNFI	10.000	ug/L	C	U		UNFI	10.000	ug/L	C	U
Bromomethane	UNFI	10.000	ug/L	C	U		UNFI	10.000	ug/L	C	U
Carbon Tetrachloride	UNFI	10.000	ug/L	C	U		UNFI	10.000	ug/L	C	U
Carbon disulfide	UNFI	10.000	ug/L	C	U		UNFI	10.000	ug/L	C	U
Chlorobenzene	UNFI	10.000	ug/L	C	U		UNFI	10.000	ug/L	C	U
Chloroethane	UNFI	10.000	ug/L	C	U		UNFI	10.000	ug/L	C	U
Chloroform	UNFI	10.000	ug/L	C	U		UNFI	10.000	ug/L	C	U
Chloromethane	UNFI	10.000	ug/L	C	U		UNFI	10.000	ug/L	C	U
Dibromochloromethane	UNFI	10.000	ug/L	C	U		UNFI	10.000	ug/L	C	U
Ethylbenzene	UNFI	10.000	ug/L	C	U		UNFI	10.000	ug/L	C	U
Methylene chloride	UNFI	10.000	ug/L	C	U		UNFI	10.000	ug/L	C	U
Styrene	UNFI	10.000	ug/L	C	U		UNFI	10.000	ug/L	C	U
Tetrachloroethene	UNFI	10.000	ug/L	C	U		UNFI	10.000	ug/L	C	U
Toluene	UNFI	10.000	ug/L	C	U		UNFI	10.000	ug/L	C	U
Trichloroethene	UNFI	10.000	ug/L	C	U		UNFI	10.000	ug/L	C	U
Vinyl Acetate	UNFI	10.000	ug/L	C	U		UNFI	10.000	ug/L	C	U
Vinyl chloride	UNFI	10.000	ug/L	C	U		UNFI	10.000	ug/L	C	U
Xylenes, Total	UNFI	10.000	ug/L	C	U		UNFI	10.000	ug/L	C	U
cis-1,3-Dichloropropene	UNFI	10.000	ug/L	C	U		UNFI	10.000	ug/L	C	U
trans-1,3-Dichloropropene	UNFI	10.000	ug/L	C	U		UNFI	10.000	ug/L	C	U
Semivolatile Organics											
1,2,4-Trichlorobenzene	UNFI	10.000	ug/L	C	UJ		UNFI	10.000	ug/L	C	U
1,2-Dichlorobenzene	UNFI	10.000	ug/L	C	UJ		UNFI	10.000	ug/L	C	U
1,2-Diphenylhydrazine	UNFI	10.000	ug/L	C	UJ			NA			
1,3-Dichlorobenzene	UNFI	10.000	ug/L	C	UJ		UNFI	10.000	ug/L	C	U
1,4-Dichlorobenzene	UNFI	10.000	ug/L	C	UJ		UNFI	10.000	ug/L	C	U
2,4,5-Trichlorophenol	UNFI	25.000	ug/L	C	UJ		UNFI	25.000	ug/L	C	U
2,4,6-Trichlorophenol	UNFI	10.000	ug/L	C	UJ		UNFI	10.000	ug/L	C	U
2,4-Dichlorophenol	UNFI	10.000	ug/L	C	UJ		UNFI	10.000	ug/L	C	U
2,4-Dimethylphenol	UNFI	10.000	ug/L	C	UJ		UNFI	10.000	ug/L	C	U
2,4-Dinitrophenol	UNFI	50.000	ug/L	C	UJ		UNFI	50.000	ug/L	C	R
2,4-Dinitrotoluene	UNFI	10.000	ug/L	C	UJ		UNFI	10.000	ug/L	C	U
2,6-Dinitrotoluene	UNFI	10.000	ug/L	C	UJ		UNFI	10.000	ug/L	C	U
2-Benzyl-4-chlorophenol		NA					UNFI	10.000	ug/L	C	U
2-Chloronaphthalene	UNFI	10.000	ug/L	C	UJ		UNFI	10.000	ug/L	C	U
2-Chlorophenol	UNFI	10.000	ug/L	C	UJ		UNFI	10.000	ug/L	C	U
2-Methylnaphthalene	UNFI	10.000	ug/L	C	UJ		UNFI	10.000	ug/L	C	U
2-Methylphenol	UNFI	10.000	ug/L	C	UJ		UNFI	10.000	ug/L	C	U
2-Nitroaniline	UNFI	25.000	ug/L	C	UJ		UNFI	25.000	ug/L	C	U

0780

5174

TABLE F-10
(Continued)

PHASE II - CHEMICAL PARAMETERS

BORING NUMBER		SF-SW-01				SF-SW-02			
SAMPLE NUMBER		110422				110432			
SAMPLING DATE		03/24/93				03/25/93			
CHEMICAL PARAMETERS	FLTD	RESULTS	UNITS	L	VQ	FLTD	RESULTS	UNITS	L	VQ
Semivolatile Organics										
2-Nitrophenol	UNFI	10.000	ug/L	C	UJ	UNFI	10.000	ug/L	C	UJ
3,3'-Dichlorobenzidine	UNFI	10.000	ug/L	C	UJ	UNFI	10.000	ug/L	C	U
3-Nitroaniline	UNFI	25.000	ug/L	C	UJ	UNFI	25.000	ug/L	C	U
4,6-Dinitro-2-methylphenol	UNFI	25.000	ug/L	C	UJ	UNFI	25.000	ug/L	C	R
4-Bromophenyl phenyl ether	UNFI	10.000	ug/L	C	UJ	UNFI	10.000	ug/L	C	U
4-Chloro-3-methylphenol	UNFI	10.000	ug/L	C	UJ	UNFI	10.000	ug/L	C	U
4-Chlorophenylphenyl ether	UNFI	10.000	ug/L	C	UJ	UNFI	10.000	ug/L	C	U
4-Methylphenol	UNFI	10.000	ug/L	C	UJ	UNFI	10.000	ug/L	C	U
4-Nitroaniline	UNFI	25.000	ug/L	C	UJ	UNFI	25.000	ug/L	C	U
4-Nitrophenol	UNFI	25.000	ug/L	C	UJ	UNFI	25.000	ug/L	C	U
Acenaphthene	UNFI	10.000	ug/L	C	UJ	UNFI	10.000	ug/L	C	U
Acenaphthylene	UNFI	10.000	ug/L	C	UJ	UNFI	10.000	ug/L	C	U
Anthracene	UNFI	10.000	ug/L	C	UJ	UNFI	10.000	ug/L	C	U
Benzo(a)anthracene	UNFI	10.000	ug/L	C	UJ	UNFI	10.000	ug/L	C	U
Benzo(a)pyrene	UNFI	10.000	ug/L	C	UJ	UNFI	10.000	ug/L	C	U
Benzo(b)fluoranthene	UNFI	10.000	ug/L	C	UJ	UNFI	10.000	ug/L	C	U
Benzo(g,h,i)perylene	UNFI	10.000	ug/L	C	UJ	UNFI	10.000	ug/L	C	U
Benzo(k)fluoranthene	UNFI	10.000	ug/L	C	UJ	UNFI	10.000	ug/L	C	U
Benzoic acid	UNFI	50.000	ug/L	C	UJ	UNFI	50.000	ug/L	C	R
Benzyl alcohol	UNFI	10.000	ug/L	C	R	UNFI	10.000	ug/L	C	R
Butyl benzyl phthalate	UNFI	10.000	ug/L	C	UJ	UNFI	10.000	ug/L	C	U
Carbazole	UNFI	10.000	ug/L	C	UJ	UNFI	10.000	ug/L	C	U
Chrysene	UNFI	10.000	ug/L	C	UJ	UNFI	10.000	ug/L	C	U
Di-n-butyl phthalate	UNFI	10.000	ug/L	C	UJ	UNFI	10.000	ug/L	C	U
Di-n-octyl phthalate	UNFI	10.000	ug/L	C	UJ	UNFI	10.000	ug/L	C	U
Dibenzo(a,h)anthracene	UNFI	10.000	ug/L	C	UJ	UNFI	10.000	ug/L	C	U
Dibenzofuran	UNFI	10.000	ug/L	C	UJ	UNFI	10.000	ug/L	C	U
Diethyl phthalate	UNFI	10.000	ug/L	C	UJ	UNFI	10.000	ug/L	C	U
Dimethyl phthalate	UNFI	10.000	ug/L	C	UJ	UNFI	10.000	ug/L	C	U
Fluoranthene	UNFI	10.000	ug/L	C	UJ	UNFI	10.000	ug/L	C	U
Fluorene	UNFI	10.000	ug/L	C	UJ	UNFI	10.000	ug/L	C	U
Hexachlorobenzene	UNFI	10.000	ug/L	C	UJ	UNFI	10.000	ug/L	C	U
Hexachlorobutadiene	UNFI	10.000	ug/L	C	UJ	UNFI	10.000	ug/L	C	U
Hexachlorocyclopentadiene	UNFI	10.000	ug/L	C	R	UNFI	10.000	ug/L	C	U
Hexachloroethane	UNFI	10.000	ug/L	C	UJ	UNFI	10.000	ug/L	C	U
Indeno(1,2,3-cd)pyrene	UNFI	10.000	ug/L	C	UJ	UNFI	10.000	ug/L	C	U
Isophorone	UNFI	10.000	ug/L	C	UJ	UNFI	10.000	ug/L	C	U
N-Nitroso-di-n-propylamine	UNFI	10.000	ug/L	C	UJ	UNFI	10.000	ug/L	C	U
N-Nitrosodimethylamine	UNFI	10.000	ug/L	C	UJ	UNFI	10.000	ug/L	C	UJ
N-Nitrosodiphenylamine	UNFI	10.000	ug/L	C	UJ	UNFI	10.000	ug/L	C	U
Naphthalene	UNFI	10.000	ug/L	C	UJ	UNFI	10.000	ug/L	C	U
Nitrobenzene	UNFI	10.000	ug/L	C	UJ	UNFI	10.000	ug/L	C	U

0784
5174

TABLE F-10
(Continued)

PHASE II - CHEMICAL PARAMETERS

BORING NUMBER		SF-SW-01				SF-SW-02			
SAMPLE NUMBER		110422				110432			
SAMPLING DATE		03/24/93				03/25/93			
CHEMICAL PARAMETERS	FLTD	RESULTS	UNITS	L	VQ	FLTD	RESULTS	UNITS	L	VQ
Semivolatile Organics										
Pentachlorophenol	UNFI	25.000	ug/L	C	UJ	UNFI	25.000	ug/L	C	U
Phenanthrene	UNFI	10.000	ug/L	C	UJ	UNFI	10.000	ug/L	C	U
Phenol	UNFI	10.000	ug/L	C	UJ	UNFI	10.000	ug/L	C	U
Pyrene	UNFI	10.000	ug/L	C	UJ	UNFI	10.000	ug/L	C	U
Tributyl phosphate	UNFI	10.000	ug/L	C	UJ	UNFI	10.000	ug/L	C	U
bis(2-Chloroethoxy)methane	UNFI	10.000	ug/L	C	UJ	UNFI	10.000	ug/L	C	U
bis(2-Chloroethyl)ether	UNFI	10.000	ug/L	C	UJ	UNFI	10.000	ug/L	C	U
bis(2-Chloroisopropyl) ether	UNFI	10.000	ug/L	C	UJ	UNFI	10.000	ug/L	C	U
bis(2-Ethylhexyl) phthalate	UNFI	10.000	ug/L	C	UJ	UNFI	10.000	ug/L	C	U
p-Chloroaniline	UNFI	10.000	ug/L	C	UJ	UNFI	10.000	ug/L	C	U
Pesticide Organics/PCBs										
4,4'-DDD	UNFI	0.100	ug/L	C	U	UNFI	0.100	ug/L	C	U
4,4'-DDE	UNFI	0.100	ug/L	C	U	UNFI	0.100	ug/L	C	U
4,4'-DDT	UNFI	0.100	ug/L	C	U	UNFI	0.100	ug/L	C	U
Aldrin	UNFI	0.050	ug/L	C	U	UNFI	0.050	ug/L	C	U
Aroclor-1016	UNFI	1.000	ug/L	C	U	UNFI	1.000	ug/L	C	U
Aroclor-1221	UNFI	2.000	ug/L	C	U	UNFI	2.000	ug/L	C	U
Aroclor-1232	UNFI	1.000	ug/L	C	U	UNFI	1.000	ug/L	C	U
Aroclor-1242	UNFI	1.000	ug/L	C	U	UNFI	1.000	ug/L	C	U
Aroclor-1248	UNFI	1.000	ug/L	C	U	UNFI	1.000	ug/L	C	U
Aroclor-1254	UNFI	1.000	ug/L	C	U	UNFI	1.000	ug/L	C	U
Aroclor-1260	UNFI	1.000	ug/L	C	U	UNFI	1.000	ug/L	C	U
Dieldrin	UNFI	0.100	ug/L	C	U	UNFI	0.100	ug/L	C	U
Endosulfan II	UNFI	0.100	ug/L	C	U	UNFI	0.100	ug/L	C	U
Endosulfan sulfate	UNFI	0.100	ug/L	C	U	UNFI	0.100	ug/L	C	U
Endosulfan-I	UNFI	0.050	ug/L	C	U	UNFI	0.050	ug/L	C	U
Endrin	UNFI	0.100	ug/L	C	U	UNFI	0.100	ug/L	C	U
Endrin aldehyde	UNFI	0.100	ug/L	C	U	UNFI	0.100	ug/L	C	U
Endrin ketone	UNFI	0.100	ug/L	C	U	UNFI	0.100	ug/L	C	U
Heptachlor	UNFI	0.050	ug/L	C	U	UNFI	0.050	ug/L	C	U
Heptachlor epoxide	UNFI	0.050	ug/L	C	U	UNFI	0.050	ug/L	C	U
Methoxychlor	UNFI	0.500	ug/L	C	U	UNFI	0.500	ug/L	C	U
Toxaphene	UNFI	5.000	ug/L	C	U	UNFI	5.000	ug/L	C	U
alpha-BHC	UNFI	0.050	ug/L	C	U	UNFI	0.050	ug/L	C	U
alpha-Chlordane	UNFI	0.050	ug/L	C	U	UNFI	0.050	ug/L	C	U
beta-BHC	UNFI	0.050	ug/L	C	U	UNFI	0.050	ug/L	C	U
delta-BHC	UNFI	0.050	ug/L	C	U	UNFI	0.050	ug/L	C	U
gamma-BHC (Lindane)	UNFI	0.050	ug/L	C	U	UNFI	0.050	ug/L	C	U
gamma-Chlordane	UNFI	0.050	ug/L	C	U	UNFI	0.050	ug/L	C	U
General Chemistry										
Alkalinity	UNFI	315.000	mg/kg	B	-	UNFI	355.300	mg/L	B	-

F-10-5
0782
5174
FEMP-OU02-4 DRAFT
February 18, 1994

TABLE F-10
(Continued)

PHASE II - CHEMICAL PARAMETERS

BORING NUMBER		SF-SW-01				SF-SW-02			
SAMPLE NUMBER		110422				110432			
SAMPLING DATE		03/24/93				03/25/93			
CHEMICAL PARAMETERS	FLTD	RESULTS	UNITS	L	VQ	FLTD	RESULTS	UNITS	L	VQ
General Chemistry										
Ammonia	UNFI	0.100	mg/kg	B	U	UNFI	0.100	mg/L	B	U
Chloride	UNFI	3.700	mg/kg	B	-	UNFI	4.400	mg/L	B	-
Fluoride	UNFI	0.400	mg/kg	B	-	UNFI	0.360	mg/L	B	-
Nitrate	UNFI	0.100	mg/kg	B	R	UNFI	0.120	mg/L	B	R
Phenols	UNFI	0.010	mg/kg	B	U	UNFI	0.010	mg/L	B	U
Phosphorus	UNFI	0.070	mg/kg	B	-		NA			
Sulfate	UNFI	71.740	mg/kg	B	-	UNFI	87.610	mg/L	B	-
Sulfide	UNFI	0.500	mg/kg	B	U	UNFI	0.500	mg/L	B	U
Total Kjeldahl Nitrogen	UNFI	0.350	mg/kg	B	-	UNFI	0.220	mg/L	B	-
Total Organic Carbon	UNFI	3.440	mg/kg	B	-	UNFI	2.440	mg/L	B	-
Total Organic Halides	UNFI	10.000	mg/kg	B	U	UNFI	0.010	mg/L	B	U
Total Organic Nitrogen	UNFI	0.350	mg/kg	B	-	UNFI	0.220	mg/L	B	-
Total Phosphorous		NA				UNFI	0.050	mg/L	B	-

TABLE F-11A

SOUTH FIELD
RI/FS GROUNDWATER RESULTS
OPERABLE UNIT 2 REMEDIAL INVESTIGATION
FERNALD ENVIRONMENTAL MANAGEMENT PROJECT

PHASE I - RADIOLOGICAL PARAMETERS

BORING NUMBER		1046				1046				1046		
SAMPLE NUMBER		003854				003089				003370		
SAMPLING DATE		01/22/89				04/13/88				07/24/88		
RADIOLOGICAL PARAMETERS	FLTD	RESULTS	UNITS	VQ	FLTD	RESULTS	UNITS	VQ	FLTD	RESULTS	UNITS	VQ
CS-137	*U	20.000	pci/L	R	*U	20.000	pci/L	R	*U	20.000	pci/L	R
NP-237	*U	1.000	pci/L	U	*U	1.000	pci/L	UJ	*U	1.000	pci/L	UJ
PU-238	*U	1.000	pci/L	UJ	*U	1.000	pci/L	U	*U	1.000	pci/L	UJ
PU-239/240	*U	1.000	pci/L	UJ	*U	1.000	pci/L	U	*U	1.000	pci/L	UJ
RA-226	*U	1.000	pci/L	U	*U	1.000	pci/L	R	*U	1.000	pci/L	U
RA-228	*U	3.300	pci/L	UJ	*U	3.000	pci/L	R	*U	3.000	pci/L	U
RU-106	*U	150.000	pci/L	R	*U	150.000	pci/L	R	*U	150.000	pci/L	R
SR-90	*U	5.000	pci/L	U	*U	5.000	pci/L	U	*U	5.000	pci/L	U
TC-99	*U	30.000	pci/L	U	*U	30.000	pci/L	U	*U	30.000	pci/L	U
TH-228	*U	1.000	pci/L	U	*U	1.100	pci/L	J	*U	1.000	pci/L	UJ
TH-230	*U	1.000	pci/L	U	*U	1.000	pci/L	J	*U	1.000	pci/L	UJ
TH-232	*U	1.000	pci/L	U	*U	1.000	pci/L	UJ	*U	1.000	pci/L	UJ
TH-TOTAL	*U	4.000	ug/L	U		NA			*U	4.000	ug/L	UJ
U-234	*U	2.400	pci/L	-	*U	62.500	pci/L	-	*U	2.800	pci/L	J
U-235/236	*U	1.000	pci/L	U	*U	3.800	pci/L	-	*U	1.000	pci/L	UJ
U-238	*U	1.900	pci/L	-	*U	79.700	pci/L	-	*U	2.000	pci/L	J
U-TOTAL	*U	6.000	ug/L	-	*U	203.000	ug/L	-	*U	6.000	ug/L	-

FEMP-OU05-1174
February 18, 1994

TABLE F-11A
(Continued)

PHASE I - RADIOLOGICAL PARAMETERS

BORING NUMBER		1046				1046				1065			
SAMPLE NUMBER		003649				066829				003860			
SAMPLING DATE		10/23/88				12/12/89				01/22/89			
RADIOLOGICAL PARAMETERS	FLTD	RESULTS	UNITS	VQ	FLTD	RESULTS	UNITS	VQ	FLTD	RESULTS	UNITS	VQ
CS-137	*U	20.000	pci/L	R		NA			*U	20.000	pci/L	R
NP-237	*U	1.000	pci/L	UJ		NA			*U	1.200	pci/L	D
PU-238	*U	1.000	pci/L	UJ		NA			*U	1.000	pci/L	UJ
PU-239/240	*U	1.000	pci/L	UJ		NA			*U	1.000	pci/L	UJ
RA-226	*U	1.000	pci/L	U		NA			*U	1.000	pci/L	U
RA-228	*U	3.000	pci/L	U		NA			*U	3.100	pci/L	UJ
RU-106	*U	150.000	pci/L	R		NA			*U	150.000	pci/L	R
SR-90	*U	5.000	pci/L	U		NA			*U	5.000	pci/L	U
TC-99	*U	30.000	pci/L	U		NA			*U	30.000	pci/L	U
TC-99		NA			UNKN	30.000	pci/L	U		NA		
TH-228	*U	1.000	pci/L	UJ		NA			*U	1.200	pci/L	D
TH-228		NA			UNKN	1.470	pci/L	J		NA		
TH-230	*U	1.000	pci/L	UJ		NA			*U	1.200	pci/L	D
TH-230		NA			UNKN	1.760	pci/L	-		NA		
TH-232	*U	1.000	pci/L	UJ		NA			*U	1.200	pci/L	D
TH-TOTAL	*U	4.000	ug/L	UJ		NA			*U	11.000	ug/L	D
U-234	*U	2.000	pci/L	J		NA			*U	1.000	pci/L	U
U-234		NA			UNKN	2.960	pci/L	-		NA		
U-235		NA			UNKN	1.000	pci/L	U		NA		
U-235/236	*U	1.000	pci/L	UJ		NA			*U	1.000	pci/L	U
U-238	*U	2.300	pci/L	J		NA			*U	1.000	pci/L	U
U-238		NA			UNKN	1.940	pci/L	-		NA		
U-TOTAL	*U	6.000	ug/L	-		NA			*U	2.000	ug/L	-
U-TOTAL		NA			UNKN	8.360	ug/L	-		NA		

TABLE F-11A
(Continued)

PHASE I - RADIOLOGICAL PARAMETERS

BORING NUMBER		1065				1065				1433			
SAMPLE NUMBER		003136				066834				047040			
SAMPLING DATE		04/14/88				12/13/89				11/16/92			
RADIOLOGICAL PARAMETERS	FLTD	RESULTS	UNITS	VQ	FLTD	RESULTS	UNITS	VQ	FLTD	RESULTS	UNITS	VQ
CS-137	*U	20.000	pci/L	R		NA				NA		
CS-137		NA				NA			UNKN	15.200	pci/L	UJ
GROSS ALPHA		NA				NA			UNKN	2619.000	pci/L	-
GROSS BETA		NA				NA			UNKN	1286.000	pci/L	-
NP-237	*U	1.000	pci/L	U		NA				NA		
PU-238	*U	1.000	pci/L	U		NA				NA		
PU-238		NA				NA			UNKN	0.180	pci/L	UJ
PU-239/240	*U	1.000	pci/L	U		NA				NA		
PU-239/240		NA				NA			UNKN	0.450	pci/L	UJ
RA-226	*U	1.000	pci/L	R		NA				NA		
RA-226		NA				NA			UNKN	0.610	pci/L	U
RA-228	*U	3.000	pci/L	R		NA				NA		
RA-228		NA				NA			UNKN	3.640	pci/L	UJ
RU-106	*U	150.000	pci/L	R		NA				NA		
RU-106		NA				NA			UNKN	114.000	pci/L	UJ
SR-90	*U	5.000	pci/L	U		NA				NA		
SR-90		NA				NA			UNKN	1.510	pci/L	UJ
TC-99	*U	30.000	pci/L	UJ		NA				NA		
TC-99		NA			UNKN	30.000	pci/L	U	UNKN	9.800	pci/L	UJ
TH-228	*U	1.000	pci/L	U		NA				NA		
TH-228		NA			UNKN	1.040	pci/L	J	UNKN	0.220	pci/L	UJ
TH-230	*U	1.000	pci/L	U		NA				NA		
TH-230		NA			UNKN	1.000	pci/L	U	UNKN	0.320	pci/L	U
TH-232	*U	1.000	pci/L	U		NA				NA		
TH-232		NA				NA			UNKN	0.370	pci/L	J
TH-TOTAL		NA				NA			UNKN	3.400	ug/L	J
U-234	*U	1.000	pci/L	U		NA				NA		
U-234		NA			UNKN	1.060	pci/L	-	UNKN	1530.000	pci/L	J
U-235		NA			UNKN	1.000	pci/L	U		NA		
U-235/236	*U	1.000	pci/L	U		NA				NA		
U-238	*U	1.000	pci/L	U		NA				NA		
U-238		NA			UNKN	1.070	pci/L	-	UNKN	1537.000	pci/L	J
U-TOTAL	*U	1.000	ug/L	-		NA				NA		
U-TOTAL		NA			UNKN	5.330	ug/L	-	UNKN	3969.000	ug/L	-

0786

FEMP-OU02-4 DRAFT
February 18, 1994
5174

TABLE F-11A
(Continued)

PHASE I - RADIOLOGICAL PARAMETERS

BORING NUMBER		1433				1433				1516		
SAMPLE NUMBER		047044				047048				046938		
SAMPLING DATE		11/30/92				12/02/92				07/17/90		
RADIOLOGICAL PARAMETERS	FLTD	RESULTS	UNITS	VQ	FLTD	RESULTS	UNITS	VQ	FLTD	RESULTS	UNITS	VQ
CS-137		NA			UNKN	17.700	pci/L	UJ		NA		
GROSS ALPHA	U	372.000	pci/L	J		NA				NA		
GROSS BETA	U	129.000	pci/L	-		NA				NA		
GROSS BETA		NA			UNKN	739.000	pci/L	-		NA		
NP-237		NA			UNKN	0.420	pci/L	N		NA		
PU-238		NA			UNKN	0.240	pci/L	U		NA		
PU-239/240		NA			UNKN	0.180	pci/L	UJ		NA		
RA-226		NA			UNKN	0.170	pci/L	J		NA		
RA-228		NA			UNKN	2.140	pci/L	UJ		NA		
RU-106		NA			UNKN	125.000	pci/L	UJ		NA		
SR-90		NA			UNKN	10.800	pci/L	U		NA		
TC-99		NA			UNKN	13.100	pci/L	UJ		NA		
TH-228		NA			UNKN	4.610	pci/L	R		NA		
TH-230		NA			UNKN	2.180	pci/L	R		NA		
TH-232		NA			UNKN	0.860	pci/L	R		NA		
TH-TOTAL		NA			UNKN	7.720	ug/L	R		NA		
U-234		NA			UNKN	723.000	pci/L	J		NA		
U-235/236		NA			UNKN	31.900	pci/L	J		NA		
U-238		NA			UNKN	731.000	pci/L	J		NA		
U-TOTAL		NA				NA			*U	293.000	ug/L	-
U-TOTAL		NA			UNKN	3390.000	ug/L	-		NA		

TABLE F-11A
(Continued)

PHASE I - RADIOLOGICAL PARAMETERS

BORING NUMBER		1516				1517				1517		
SAMPLE NUMBER		046941				046944 DUPLICATE				046945		
SAMPLING DATE		08/21/90				07/17/90				07/17/90		
RADIOLOGICAL PARAMETERS	FLTD	RESULTS	UNITS	VQ	FLTD	RESULTS	UNITS	VQ	FLTD	RESULTS	UNITS	VQ
CS-137		NA				NA			UNKN	20.000	pci/L	R
NP-237		NA				NA			UNKN	1.000	pci/L	U
PU-238		NA				NA			UNKN	1.000	pci/L	UJ
PU-239/240		NA				NA			UNKN	1.000	pci/L	UJ
RA-226		NA				NA			UNKN	1.000	pci/L	U
RA-228		NA				NA			UNKN	3.000	pci/L	U
RU-106		NA				NA			UNKN	150.000	pci/L	R
SR-90		NA				NA			UNKN	5.000	pci/L	UJ
TC-99		NA				NA			UNKN	30.000	pci/L	R
TH-228		NA				NA			UNKN	1.000	pci/L	UJ
TH-230		NA				NA			UNKN	1.000	pci/L	UJ
TH-232		NA				NA			UNKN	1.000	pci/L	UJ
TH-TOTAL		NA				NA			UNKN	3.720	ug/L	J
U-TOTAL	FILT	687.000	ug/L	-		NA				NA		
U-TOTAL		NA			UNKN	52.800	ug/L	-	UNKN	966.000	ug/L	-

0788

5174

TABLE F-11A
(Continued)

PHASE I - RADIOLOGICAL PARAMETERS

BORING NUMBER		1517				1518				2014		
SAMPLE NUMBER		046946				046965				003869		
SAMPLING DATE		08/21/90				08/21/90				01/31/89		
RADIOLOGICAL PARAMETERS	FLTD	RESULTS	UNITS	VQ	FLTD	RESULTS	UNITS	VQ	FLTD	RESULTS	UNITS	VQ
CS-137		NA				NA			*U	20.000	pci/L	R
NP-237		NA				NA			*U	1.000	pci/L	U
PU-238		NA				NA			*U	1.000	pci/L	U
PU-239/240		NA				NA			*U	1.000	pci/L	U
RA-226		NA				NA			*U	1.400	pci/L	-
RA-228		NA				NA			*U	3.200	pci/L	UJ
RU-106		NA				NA			*U	150.000	pci/L	R
SR-90		NA				NA			*U	5.000	pci/L	U
TC-99		NA				NA			*U	30.000	pci/L	UJ
TH-228		NA				NA			*U	1.000	pci/L	U
TH-230		NA				NA			*U	1.000	pci/L	U
TH-232		NA				NA			*U	1.000	pci/L	U
TH-TOTAL		NA				NA			*U	3.000	ug/L	U
U-234		NA				NA			*U	4.200	pci/L	-
U-235/236		NA				NA			*U	1.000	pci/L	U
U-238		NA				NA			*U	5.700	pci/L	-
U-TOTAL		NA				NA			*U	17.000	ug/L	-
U-TOTAL	FILT	29.900	ug/L	-	FILT	64.000	ug/L	-		NA		

TABLE F-11A
(Continued)

PHASE I - RADIOLOGICAL PARAMETERS

BORING NUMBER		2014				2014				2014		
SAMPLE NUMBER		003064				004211				004151		
SAMPLING DATE		03/28/88				04/01/90				07/26/89		
RADIOLOGICAL PARAMETERS	FLTD	RESULTS	UNITS	VQ	FLTD	RESULTS	UNITS	VQ	FLTD	RESULTS	UNITS	VQ
CS-137	*U	20.000	pci/L	R	*U	20.000	pci/L	R	*U	20.000	pci/L	R
NP-237	*U	1.000	pci/L	R	*U	1.000	pci/L	U	*U	1.000	pci/L	U
PU-238	*U	1.000	pci/L	UJ	*U	1.000	pci/L	U	*U	1.000	pci/L	U
PU-239/240	*U	1.000	pci/L	UJ	*U	1.000	pci/L	U	*U	1.000	pci/L	U
RA-226	*U	1.000	pci/L	R	*U	1.000	pci/L	UJ	*U	1.000	pci/L	UJ
RA-228	*U	3.000	pci/L	UJ	*U	3.000	pci/L	UJ	*U	3.000	pci/L	U
RU-106	*U	150.000	pci/L	R	*U	150.000	pci/L	R	*U	150.000	pci/L	R
SR-90	*U	5.000	pci/L	R	*U	5.000	pci/L	R	*U	5.000	pci/L	U
TC-99	*U	30.000	pci/L	UJ	*U	30.000	pci/L	UJ	*U	30.000	pci/L	U
TH-228	*U	1.000	pci/L	UJ	*U	1.000	pci/L	U	*U	1.000	pci/L	UJ
TH-230	*U	1.200	pci/L	J	*U	1.000	pci/L	U	*U	1.000	pci/L	UJ
TH-232	*U	1.000	pci/L	UJ	*U	1.000	pci/L	U	*U	1.000	pci/L	UJ
TH-TOTAL		NA			*U	2.200	ug/L	U	*U	3.000	ug/L	UJ
U-234	*U	9.500	pci/L	J	*U	7.150	pci/L	J	*U	7.000	pci/L	-
U-235/236	*U	1.600	pci/L	J	*U	1.000	pci/L	UJ	*U	1.000	pci/L	U
U-238	*U	13.100	pci/L	J	*U	8.950	pci/L	J	*U	9.000	pci/L	-
U-TOTAL	*U	32.000	ug/L	R	*U	36.000	ug/L	-	*U	33.000	ug/L	-

0730

5174
FEMP-OU#2-4 DRAFT
February 18, 1994

TABLE F-11A
(Continued)

PHASE I - RADIOLOGICAL PARAMETERS

BORING NUMBER		2014				2014				2046			
SAMPLE NUMBER		003384				003673				003997			
SAMPLING DATE		07/28/88				11/06/88				02/02/89			
RADIOLOGICAL PARAMETERS	FLTD	RESULTS	UNITS	VQ	FLTD	RESULTS	UNITS	VQ	FLTD	RESULTS	UNITS	VQ
CS-137	*U	20.000	pci/L	R	*U	20.000	pci/L	R	*U	20.000	pci/L	R
NP-237	*U	1.000	pci/L	U	*U	1.000	pci/L	U	*U	1.000	pci/L	U
PU-238	*U	1.000	pci/L	R	*U	1.000	pci/L	U	*U	1.000	pci/L	U
PU-239/240	*U	1.000	pci/L	R	*U	1.000	pci/L	U	*U	1.000	pci/L	U
RA-226	*U	1.000	pci/L	U	*U	1.200	pci/L	-	*U	1.000	pci/L	U
RA-228	*U	3.000	pci/L	U	*U	3.000	pci/L	U	*U	3.000	pci/L	UJ
RU-106	*U	150.000	pci/L	R	*U	150.000	pci/L	R	*U	150.000	pci/L	R
SR-90	*U	5.000	pci/L	U	*U	5.000	pci/L	U	*U	5.000	pci/L	U
TC-99	*U	30.000	pci/L	U	*U	30.000	pci/L	U	*U	30.000	pci/L	UJ
TH-228	*U	1.000	pci/L	UJ	*U	1.000	pci/L	U	*U	1.000	pci/L	U
TH-230	*U	1.000	pci/L	UJ	*U	1.000	pci/L	U	*U	1.000	pci/L	U
TH-232	*U	1.000	pci/L	UJ	*U	1.000	pci/L	U	*U	1.000	pci/L	U
TH-TOTAL	*U	4.000	ug/L	UJ	*U	3.000	ug/L	U	*U	2.000	ug/L	U
U-234	*U	7.700	pci/L	J	*U	9.800	pci/L	-	*U	93.800	pci/L	-
U-235/236	*U	1.000	pci/L	UJ	*U	1.000	pci/L	U	*U	4.300	pci/L	-
U-238	*U	9.900	pci/L	J	*U	13.500	pci/L	-	*U	102.000	pci/L	-
U-TOTAL	*U	33.000	ug/L	-	*U	35.000	ug/L	J	*U	309.000	ug/L	-

0791

TABLE F-11A
(Continued)

PHASE I - RADIOLOGICAL PARAMETERS

BORING NUMBER		2046				2046				2046		
SAMPLE NUMBER		004219				004097				004159		
SAMPLING DATE		04/03/90				05/10/89				07/28/89		
RADIOLOGICAL PARAMETERS	FLTD	RESULTS	UNITS	VQ	FLTD	RESULTS	UNITS	VQ	FLTD	RESULTS	UNITS	VQ
CS-137	*U	20.000	pci/L	R	*U	20.000	pci/L	U	*U	20.000	pci/L	R
NP-237	*U	1.000	pci/L	U	*U	1.000	pci/L	UJ	*U	1.000	pci/L	U
PU-238	*U	1.000	pci/L	U	*U	1.000	pci/L	U	*U	1.000	pci/L	U
PU-239/240	*U	1.000	pci/L	U	*U	1.000	pci/L	U	*U	1.000	pci/L	U
RA-226	*U	1.000	pci/L	UJ	*U	1.000	pci/L	U	*U	1.000	pci/L	UJ
RA-228	*U	3.000	pci/L	UJ	*U	3.000	pci/L	UJ	*U	3.000	pci/L	U
RU-106	*U	150.000	pci/L	R	*U	150.000	pci/L	U	*U	150.000	pci/L	R
SR-90	*U	5.000	pci/L	R	*U	5.000	pci/L	U	*U	5.000	pci/L	U
TC-99	*U	30.000	pci/L	R	*U	36.800	pci/L	UJ	*U	30.000	pci/L	U
TH-228	*U	1.000	pci/L	R	*U	1.000	pci/L	U	*U	1.000	pci/L	UJ
TH-230	*U	1.920	pci/L	R	*U	1.000	pci/L	U	*U	1.000	pci/L	UJ
TH-232	*U	1.000	pci/L	R	*U	1.000	pci/L	U	*U	1.000	pci/L	UJ
TH-TOTAL	*U	4.100	ug/L	R	*U	3.000	ug/L	U	*U	6.000	ug/L	UJ
U-234	*U	199.000	pci/L	J	*U	219.000	pci/L	-	*U	86.900	pci/L	-
U-235/236	*U	11.500	pci/L	J	*U	9.700	pci/L	-	*U	3.800	pci/L	-
U-238	*U	206.000	pci/L	J	*U	231.000	pci/L	-	*U	87.700	pci/L	-
U-TOTAL	*U	907.000	ug/L	-	*U	851.000	ug/L	-	*U	232.000	ug/L	-

0792

TABLE F-11A
(Continued)

PHASE I - RADIOLOGICAL PARAMETERS

BORING NUMBER		2048				2048				2065		
SAMPLE NUMBER		003994				004100				003538 DUPLICATE		
SAMPLING DATE		02/09/89				05/02/89				02/02/89		
RADIOLOGICAL PARAMETERS	FLTD	RESULTS	UNITS	VQ	FLTD	RESULTS	UNITS	VQ	FLTD	RESULTS	UNITS	VQ
CS-137	*U	20.000	pci/L	R	*U	20.000	pci/L	U		NA		
CS-137		NA				NA			FILT	20.000	pci/L	R
CS-137		NA				NA			UNFI	20.000	pci/L	R
NP-237	*U	1.000	pci/L	U	*U	1.000	pci/L	UJ		NA		
NP-237		NA				NA			FILT	1.000	pci/L	U
NP-237		NA				NA			UNFI	1.100	pci/L	D
PU-238	*U	1.000	pci/L	U	*U	1.000	pci/L	U		NA		
PU-238		NA				NA			FILT	1.000	pci/L	U
PU-238		NA				NA			UNFI	1.000	pci/L	U
PU-239/240	*U	1.000	pci/L	U	*U	1.000	pci/L	U		NA		
PU-239/240		NA				NA			FILT	1.000	pci/L	U
PU-239/240		NA				NA			UNFI	1.000	pci/L	U
RA-226	*U	1.000	pci/L	U	*U	1.000	pci/L	U		NA		
RA-226		NA				NA			FILT	1.000	pci/L	U
RA-226		NA				NA			UNFI	1.000	pci/L	U
RA-228	*U	3.000	pci/L	UJ	*U	3.000	pci/L	UJ		NA		
RA-228		NA				NA			FILT	3.000	pci/L	UJ
RA-228		NA				NA			UNFI	3.000	pci/L	UJ
RU-106	*U	150.000	pci/L	R	*U	150.000	pci/L	U		NA		
RU-106		NA				NA			FILT	150.000	pci/L	R
RU-106		NA				NA			UNFI	150.000	pci/L	R
SR-90	*U	5.000	pci/L	UJ	*U	5.000	pci/L	U		NA		
SR-90		NA				NA			FILT	5.000	pci/L	U
SR-90		NA				NA			UNFI	5.000	pci/L	U
TC-99	*U	30.000	pci/L	U	*U	30.000	pci/L	U		NA		
TC-99		NA				NA			FILT	30.000	pci/L	U
TC-99		NA				NA			UNFI	30.000	pci/L	U
TH-228	*U	1.000	pci/L	U	*U	1.000	pci/L	U		NA		
TH-228		NA				NA			FILT	1.200	pci/L	J
TH-228		NA				NA			UNFI	1.400	pci/L	J
TH-230	*U	1.000	pci/L	U	*U	1.000	pci/L	U		NA		
TH-230		NA				NA			FILT	1.600	pci/L	-
TH-230		NA				NA			UNFI	1.100	pci/L	D
TH-232	*U	1.000	pci/L	U	*U	1.000	pci/L	U		NA		
TH-232		NA				NA			FILT	1.400	pci/L	-
TH-232		NA				NA			UNFI	1.100	pci/L	D
TH-TOTAL	*U	2.000	ug/L	U	*U	3.000	ug/L	U		NA		
TH-TOTAL		NA				NA			FILT	13.000	ug/L	-
TH-TOTAL		NA				NA			UNFI	10.000	ug/L	D
U-234	*U	1.000	pci/L	U	*U	1.000	pci/L	U		NA		
U-234		NA				NA			FILT	6.000	pci/L	-
U-234		NA				NA			UNFI	5.300	pci/L	-

TABLE F-11A
(Continued)

PHASE I - RADIOLOGICAL PARAMETERS

BORING NUMBER		2048				2048				2065		
SAMPLE NUMBER		003994				004100				003538 DUPLICATE		
SAMPLING DATE		02/09/89				05/02/89				02/02/89		
RADIOLOGICAL PARAMETERS	FLTD	RESULTS	UNITS	VQ	FLTD	RESULTS	UNITS	VQ	FLTD	RESULTS	UNITS	VQ
U-235/236	*U	1.000	pci/L	U	*U	1.000	pci/L	U		NA		
U-235/236		NA				NA			FILT	1.000	pci/L	U
U-235/236		NA				NA			UNFI	1.000	pci/L	U
U-238	*U	1.000	pci/L	U	*U	1.000	pci/L	U		NA		
U-238		NA				NA			FILT	3.700	pci/L	-
U-238		NA				NA			UNFI	3.900	pci/L	-
U-TOTAL	*U	1.000	ug/L	UJ	*U	1.000	ug/L	U		NA		
U-TOTAL		NA				NA			FILT	13.000	ug/L	-
U-TOTAL		NA				NA			UNFI	9.000	ug/L	-

0794

FEMP-EU02-4-DRAFT
February 18, 1994

5174

TABLE F-11A
(Continued)

PHASE I - RADIOLOGICAL PARAMETERS

BORING NUMBER		2065				2065				2065			
SAMPLE NUMBER		003884				004225				003095			
SAMPLING DATE		02/02/89				04/09/90				04/19/88			
RADIOLOGICAL PARAMETERS	FLTD	RESULTS	UNITS	VQ	FLTD	RESULTS	UNITS	VQ	FLTD	RESULTS	UNITS	VQ
CS-137		NA			*U	20.000	pci/L	R	*U	20.000	pci/L	R
CS-137	FILT	20.000	pci/L	UJ		NA				NA		
CS-137	UNFI	20.000	pci/L	NV		NA				NA		
NP-237		NA			*U	1.000	pci/L	U	*U	1.000	pci/L	UJ
NP-237	FILT	1.000	pci/L	UJ		NA				NA		
NP-237	UNFI	1.000	pci/L	NV		NA				NA		
PU-238		NA			*U	1.000	pci/L	U	*U	1.000	pci/L	UJ
PU-238	FILT	1.000	pci/L	NV		NA				NA		
PU-238	UNFI	1.000	pci/L	NV		NA				NA		
PU-239/240		NA			*U	1.000	pci/L	U	*U	1.000	pci/L	UJ
PU-239/240	FILT	1.000	pci/L	NV		NA				NA		
PU-239/240	UNFI	1.000	pci/L	NV		NA				NA		
RA-226		NA			*U	1.000	pci/L	UJ	*U	1.000	pci/L	UJ
RA-226	FILT	1.000	pci/L	NV		NA				NA		
RA-226	UNFI	1.000	pci/L	NV		NA				NA		
RA-228		NA			*U	3.000	pci/L	R	*U	3.000	pci/L	UJ
RA-228	FILT	3.000	pci/L	NV		NA				NA		
RA-228	UNFI	3.000	pci/L	NV		NA				NA		
RU-106		NA			*U	150.000	pci/L	R	*U	150.000	pci/L	R
RU-106	FILT	150.000	pci/L	UJ		NA				NA		
RU-106	UNFI	150.000	pci/L	NV		NA				NA		
SR-90		NA			*U	5.000	pci/L	U	*U	5.000	pci/L	U
SR-90	FILT	5.000	pci/L	NV		NA				NA		
SR-90	UNFI	5.000	pci/L	NV		NA				NA		
TC-99		NA			*U	30.000	pci/L	UJ	*U	30.000	pci/L	U
TC-99	FILT	30.000	pci/L	UJ		NA				NA		
TC-99	UNFI	30.000	pci/L	NV		NA				NA		
TH-228		NA			*U	1.000	pci/L	U	*U	1.000	pci/L	U
TH-228	FILT	2.300	pci/L	J		NA				NA		
TH-228	UNFI	1.200	pci/L	NV		NA				NA		
TH-230		NA			*U	1.000	pci/L	U	*U	1.200	pci/L	-
TH-230	FILT	1.000	pci/L	UJ		NA				NA		
TH-230	UNFI	1.000	pci/L	NV		NA				NA		
TH-232		NA			*U	1.000	pci/L	U	*U	1.000	pci/L	U
TH-232	FILT	1.000	pci/L	UJ		NA				NA		
TH-232	UNFI	1.000	pci/L	NV		NA				NA		
TH-TOTAL		NA			*U	4.500	ug/L	U		NA		
TH-TOTAL	FILT	8.000	ug/L	UJ		NA				NA		
TH-TOTAL	UNFI	7.000	ug/L	NV		NA				NA		
U-234		NA			*U	3.890	pci/L	-	*U	5.100	pci/L	-
U-234	FILT	5.000	pci/L	J		NA				NA		
U-234	UNFI	3.700	pci/L	NV		NA				NA		

5174
0795

TABLE F-11A
(Continued)

PHASE I - RADIOLOGICAL PARAMETERS

BORING NUMBER		2065				2065				2065		
SAMPLE NUMBER		003884				004225				003095		
SAMPLING DATE		02/02/89				04/09/90				04/19/88		
RADIOLOGICAL PARAMETERS	FLTD	RESULTS	UNITS	VQ	FLTD	RESULTS	UNITS	VQ	FLTD	RESULTS	UNITS	VQ
U-235/236		NA			*U	1.000	pci/L	U	*U	1.000	pci/L	U
U-235/236	FILT	1.000	pci/L	UJ		NA				NA		
U-235/236	UNFI	1.000	pci/L	NV		NA				NA		
U-238		NA			*U	3.780	pci/L	-	*U	3.300	pci/L	-
U-238	FILT	3.500	pci/L	J		NA				NA		
U-238	UNFI	3.300	pci/L	NV		NA				NA		
U-TOTAL		NA			*U	11.400	ug/L	-	*U	3.000	ug/L	J
U-TOTAL	FILT	13.000	ug/L	NV		NA				NA		
U-TOTAL	UNFI	8.000	ug/L	NV		NA				NA		

0796

5174

TABLE F-11A
(Continued)

PHASE I - RADIOLOGICAL PARAMETERS

BORING NUMBER		2065				2065				2065			
SAMPLE NUMBER		004163				004168 DUPLICATE				003438			
SAMPLING DATE		07/30/89				07/30/89				08/04/88			
RADIOLOGICAL PARAMETERS	FLTD	RESULTS	UNITS	VQ	FLTD	RESULTS	UNITS	VQ	FLTD	RESULTS	UNITS	VQ
CS-137	*U	20.000	pci/L	UJ	*U	20.000	pci/L	UJ		NA		
CS-137		NA				NA			FILT	20.000	pci/L	R
CS-137		NA				NA			UNFI	20.000	pci/L	R
NP-237	*U	1.000	pci/L	U	*U	1.000	pci/L	U		NA		
NP-237		NA				NA			FILT	1.000	pci/L	UJ
NP-237		NA				NA			UNFI	1.000	pci/L	UJ
PU-238	*U	1.000	pci/L	U	*U	1.000	pci/L	U		NA		
PU-238		NA				NA			FILT	1.000	pci/L	UJ
PU-238		NA				NA			UNFI	1.000	pci/L	UJ
PU-239/240	*U	1.000	pci/L	U	*U	1.000	pci/L	U		NA		
PU-239/240		NA				NA			FILT	1.000	pci/L	UJ
PU-239/240		NA				NA			UNFI	1.000	pci/L	UJ
RA-226	*U	1.000	pci/L	UJ	*U	1.000	pci/L	UJ		NA		
RA-226		NA				NA			FILT	1.000	pci/L	R
RA-226		NA				NA			UNFI	1.000	pci/L	R
RA-228	*U	3.000	pci/L	U	*U	3.000	pci/L	U		NA		
RA-228		NA				NA			FILT	3.000	pci/L	U
RA-228		NA				NA			UNFI	3.000	pci/L	U
RU-106	*U	150.000	pci/L	UJ	*U	150.000	pci/L	UJ		NA		
RU-106		NA				NA			FILT	150.000	pci/L	R
RU-106		NA				NA			UNFI	150.000	pci/L	R
SR-90	*U	5.000	pci/L	U	*U	5.000	pci/L	U		NA		
SR-90		NA				NA			FILT	5.000	pci/L	U
SR-90		NA				NA			UNFI	5.000	pci/L	U
TC-99	*U	30.000	pci/L	U	*U	30.000	pci/L	U		NA		
TC-99		NA				NA			FILT	30.000	pci/L	U
TC-99		NA				NA			UNFI	30.000	pci/L	U
TH-228	*U	1.300	pci/L	UJ	*U	1.100	pci/L	UJ		NA		
TH-228		NA				NA			FILT	1.000	pci/L	UJ
TH-228		NA				NA			UNFI	1.000	pci/L	UJ
TH-230	*U	1.300	pci/L	UJ	*U	1.100	pci/L	UJ		NA		
TH-230		NA				NA			FILT	1.000	pci/L	UJ
TH-230		NA				NA			UNFI	1.000	pci/L	UJ
TH-232	*U	1.300	pci/L	UJ	*U	1.100	pci/L	UJ		NA		
TH-232		NA				NA			FILT	1.000	pci/L	UJ
TH-232		NA				NA			UNFI	1.000	pci/L	UJ
TH-TOTAL	*U	12.000	ug/L	UJ	*U	10.000	ug/L	UJ		NA		
TH-TOTAL		NA				NA			FILT	10.000	ug/L	UJ
TH-TOTAL		NA				NA			UNFI	7.000	ug/L	UJ
U-234	*U	5.500	pci/L	-	*U	4.100	pci/L	-		NA		
U-234		NA				NA			FILT	4.800	pci/L	J
U-234		NA				NA			UNFI	4.600	pci/L	J

TABLE F-11A
(Continued)

PHASE I - RADIOLOGICAL PARAMETERS

BORING NUMBER		2065				2065				2065		
SAMPLE NUMBER		004163				004168 DUPLICATE				003438		
SAMPLING DATE		07/30/89				07/30/89				08/04/88		
RADIOLOGICAL PARAMETERS	FLTD	RESULTS	UNITS	VQ	FLTD	RESULTS	UNITS	VQ	FLTD	RESULTS	UNITS	VQ
U-235/236	*U	1.000	pci/L	U	*U	1.000	pci/L	U		NA		
U-235/236		NA				NA			FILT	1.000	pci/L	UJ
U-235/236		NA				NA			UNFI	1.000	pci/L	UJ
U-238	*U	5.300	pci/L	-	*U	4.000	pci/L	-		NA		
U-238		NA				NA			FILT	4.100	pci/L	J
U-238		NA				NA			UNFI	4.000	pci/L	J
U-TOTAL	*U	12.000	ug/L	-	*U	11.000	ug/L	-		NA		
U-TOTAL		NA				NA			FILT	10.000	ug/L	-
U-TOTAL		NA				NA			UNFI	9.000	ug/L	-

0798

5174

TABLE F-11A
(Continued)

PHASE I - RADIOLOGICAL PARAMETERS

BORING NUMBER		2065				2385				2385		
SAMPLE NUMBER		003693				004192				004303		
SAMPLING DATE		11/08/88				05/06/90				07/10/90		
RADIOLOGICAL PARAMETERS	FLTD	RESULTS	UNITS	VQ	FLTD	RESULTS	UNITS	VQ	FLTD	RESULTS	UNITS	VQ
CS-137		NA			*U	20.000	pci/L	UJ		NA		
CS-137	FILT	20.000	pci/L	R		NA				NA		
CS-137	UNFI	20.000	pci/L	R		NA				NA		
GROSS ALPHA		NA				NA			*U	72.300	pci/L	NV
GROSS BETA		NA				NA			*U	52.900	pci/L	NV
NP-237		NA			*U	1.000	pci/L	U	*U	1.000	pci/L	UJ
NP-237	FILT	1.000	pci/L	UJ		NA				NA		
NP-237	UNFI	1.000	pci/L	UJ		NA				NA		
PU-238		NA			*U	1.000	pci/L	U	*U	1.000	pci/L	R
PU-238	FILT	1.000	pci/L	UJ		NA				NA		
PU-238	UNFI	1.000	pci/L	UJ		NA				NA		
PU-239/240		NA			*U	1.000	pci/L	U	*U	1.000	pci/L	R
PU-239/240	FILT	1.000	pci/L	UJ		NA				NA		
PU-239/240	UNFI	1.000	pci/L	UJ		NA				NA		
RA-226		NA			*U	1.230	pci/L	NV	*U	0.100	pci/L	UJ
RA-226	FILT	1.000	pci/L	U		NA				NA		
RA-226	UNFI	1.000	pci/L	U		NA				NA		
RA-228		NA			*U	3.000	pci/L	UJ	*U	2.000	pci/L	UJ
RA-228	FILT	3.000	pci/L	U		NA				NA		
RA-228	UNFI	3.000	pci/L	U		NA				NA		
RU-106		NA			*U	150.000	pci/L	UJ		NA		
RU-106	FILT	150.000	pci/L	R		NA				NA		
RU-106	UNFI	150.000	pci/L	R		NA				NA		
SR-90		NA			*U	5.000	pci/L	UJ	*U	5.000	pci/L	U
SR-90	FILT	5.000	pci/L	U		NA				NA		
SR-90	UNFI	5.000	pci/L	U		NA				NA		
TC-99		NA			*U	30.000	pci/L	UJ	*U	30.000	pci/L	UJ
TC-99	FILT	30.000	pci/L	U		NA				NA		
TC-99	UNFI	30.000	pci/L	U		NA				NA		
TH-228		NA			*U	1.000	pci/L	UJ	*U	1.160	pci/L	J
TH-228	FILT	1.000	pci/L	UJ		NA				NA		
TH-228	UNFI	1.000	pci/L	UJ		NA				NA		
TH-230		NA			*U	1.780	pci/L	J	*U	1.000	pci/L	UJ
TH-230	FILT	1.000	pci/L	UJ		NA				NA		
TH-230	UNFI	1.000	pci/L	UJ		NA				NA		
TH-232		NA			*U	1.490	pci/L	J	*U	1.000	pci/L	UJ
TH-232	FILT	1.000	pci/L	UJ		NA				NA		
TH-232	UNFI	1.000	pci/L	UJ		NA				NA		
TH-TOTAL		NA			*U	13.500	ug/L	J	*U	1.900	ug/L	UJ
TH-TOTAL	FILT	5.000	ug/L	UJ		NA				NA		
TH-TOTAL	UNFI	3.000	ug/L	UJ		NA				NA		
U-234		NA			*U	51.400	pci/L	J	*U	34.800	pci/L	J

TABLE F-11A
(Continued)

PHASE I - RADIOLOGICAL PARAMETERS

BORING NUMBER		2065				2385				2385		
SAMPLE NUMBER		003693				004192				004303		
SAMPLING DATE		11/08/88				05/06/90				07/10/90		
RADIOLOGICAL PARAMETERS	FLTD	RESULTS	UNITS	VQ	FLTD	RESULTS	UNITS	VQ	FLTD	RESULTS	UNITS	VQ
U-234	FILT	4.700	pci/L	J		NA				NA		
U-234	UNFI	2.600	pci/L	J		NA				NA		
U-235/236		NA			*U	1.780	pci/L	J	*U	1.810	pci/L	J
U-235/236	FILT	1.000	pci/L	UJ		NA				NA		
U-235/236	UNFI	1.000	pci/L	UJ		NA				NA		
U-238		NA			*U	51.400	pci/L	J	*U	36.200	pci/L	J
U-238	FILT	3.900	pci/L	J		NA				NA		
U-238	UNFI	2.600	pci/L	J		NA				NA		
U-TOTAL		NA			*U	204.000	ug/L	J	*U	108.000	ug/L	J
U-TOTAL	FILT	12.000	ug/L	-		NA				NA		
U-TOTAL	UNFI	7.000	ug/L	-		NA				NA		

0800

5174

TABLE F-11A
(Continued)

PHASE I - RADIOLOGICAL PARAMETERS

BORING NUMBER		3014				3014		
SAMPLE NUMBER		003870				004239		
SAMPLING DATE		01/31/89				04/01/90		
RADIOLOGICAL PARAMETERS	FLTD	RESULTS	UNITS	VQ	FLTD	RESULTS	UNITS	VQ
CS-137	*U	20.000	pci/L	R	*U	20.000	pci/L	R
NP-237	*U	1.000	pci/L	U	*U	1.000	pci/L	U
PU-238	*U	1.000	pci/L	U	*U	1.000	pci/L	U
PU-239/240	*U	1.000	pci/L	U	*U	1.000	pci/L	U
RA-226	*U	1.000	pci/L	U	*U	1.000	pci/L	UJ
RA-228	*U	3.100	pci/L	UJ	*U	3.000	pci/L	UJ
RU-106	*U	150.000	pci/L	R	*U	150.000	pci/L	R
SR-90	*U	5.000	pci/L	U	*U	5.000	pci/L	UJ
TC-99	*U	30.000	pci/L	UJ	*U	30.000	pci/L	UJ
TH-228	*U	1.000	pci/L	U	*U	1.000	pci/L	UJ
TH-230	*U	1.000	pci/L	U	*U	1.120	pci/L	J
TH-232	*U	1.000	pci/L	U	*U	1.000	pci/L	UJ
TH-TOTAL	*U	3.000	ug/L	U	*U	2.900	ug/L	UJ
U-234	*U	6.900	pci/L	-	*U	17.100	pci/L	J
U-235/236	*U	1.000	pci/L	U	*U	1.470	pci/L	J
U-238	*U	8.900	pci/L	-	*U	16.400	pci/L	J
U-TOTAL	*U	30.000	ug/L	-	*U	35.300	ug/L	-

TABLE F-11A
(Continued)

PHASE I - RADIOLOGICAL PARAMETERS

BORING NUMBER		3014				3014				3014		
SAMPLE NUMBER		003084				003385				003672		
SAMPLING DATE		04/08/88				07/28/88				11/06/88		
RADIOLOGICAL PARAMETERS	FLTD	RESULTS	UNITS	VQ	FLTD	RESULTS	UNITS	VQ	FLTD	RESULTS	UNITS	VQ
CS-137	*U	20.000	pci/L	R	*U	20.000	pci/L	R	*U	20.000	pci/L	R
NP-237	*U	1.000	pci/L	UJ	*U	1.000	pci/L	U	*U	1.000	pci/L	U
PU-238	*U	1.000	pci/L	UJ	*U	1.000	pci/L	R	*U	1.000	pci/L	U
PU-239/240	*U	1.000	pci/L	UJ	*U	1.000	pci/L	R	*U	1.000	pci/L	U
RA-226	*U	1.000	pci/L	R	*U	1.000	pci/L	U	*U	1.000	pci/L	U
RA-228	*U	3.000	pci/L	U	*U	3.000	pci/L	U	*U	3.000	pci/L	U
RU-106	*U	150.000	pci/L	R	*U	150.000	pci/L	R	*U	150.000	pci/L	R
SR-90	*U	5.000	pci/L	U	*U	5.000	pci/L	U	*U	5.000	pci/L	U
TC-99	*U	30.000	pci/L	U	*U	30.000	pci/L	U	*U	30.000	pci/L	U
TH-228	*U	2.500	pci/L	J	*U	1.000	pci/L	UJ	*U	1.000	pci/L	U
TH-230	*U	1.400	pci/L	J	*U	1.000	pci/L	UJ	*U	1.000	pci/L	U
TH-232	*U	1.100	pci/L	J	*U	1.000	pci/L	UJ	*U	1.000	pci/L	U
TH-TOTAL		NA			*U	7.000	ug/L	J	*U	7.000	ug/L	D
U-234	*U	6.700	pci/L	J	*U	7.300	pci/L	J	*U	7.100	pci/L	-
U-235/236	*U	1.000	pci/L	UJ	*U	1.000	pci/L	UJ	*U	1.000	pci/L	U
U-238	*U	8.500	pci/L	J	*U	10.000	pci/L	J	*U	8.700	pci/L	-
U-TOTAL	*U	23.000	ug/L	J	*U	29.000	ug/L	-	*U	28.000	ug/L	J

TABLE F-11A
(Continued)

PHASE I - RADIOLOGICAL PARAMETERS

BORING NUMBER		3045				3046				3046		
SAMPLE NUMBER		004198				004207				004332		
SAMPLING DATE		05/23/90				06/15/90				08/24/90		
RADIOLOGICAL PARAMETERS	FLTD	RESULTS	UNITS	VQ	FLTD	RESULTS	UNITS	VQ	FLTD	RESULTS	UNITS	VQ
CS-137	*U	20.000	pci/L	R	*U	20.000	pci/L	R	*U	20.000	pci/L	R
NP-237	*U	1.000	pci/L	U	*U	1.000	pci/L	R		NA		
PU-238	*U	1.000	pci/L	U	*U	1.000	pci/L	UJ		NA		
PU-239/240	*U	1.000	pci/L	U	*U	1.000	pci/L	UJ		NA		
RA-226	*U	1.000	pci/L	NV	*U	2.400	pci/L	-	*U	1.000	pci/L	U
RA-228	*U	3.000	pci/L	U	*U	3.000	pci/L	R	*U	3.000	pci/L	UJ
RU-106	*U	150.000	pci/L	R	*U	150.000	pci/L	R	*U	150.000	pci/L	R
SR-90	*U	5.000	pci/L	U	*U	5.000	pci/L	U	*U	5.000	pci/L	U
TC-99	*U	30.000	pci/L	U	*U	30.000	pci/L	UJ	*U	31.000	pci/L	D
TH-228	*U	1.000	pci/L	U	*U	1.000	pci/L	UJ	*U	1.590	pci/L	-
TH-230	*U	1.000	pci/L	U	*U	1.000	pci/L	UJ	*U	1.000	pci/L	U
TH-232	*U	1.000	pci/L	U	*U	1.000	pci/L	UJ	*U	1.000	pci/L	U
TH-TOTAL	*U	6.700	ug/L	U	*U	3.100	ug/L	UJ	*U	1.700	ug/L	U
U-234	*U	1.000	pci/L	U	*U	1.000	pci/L	U	*U	1.670	pci/L	-
U-235/236	*U	1.000	pci/L	U	*U	1.000	pci/L	U	*U	1.000	pci/L	U
U-238	*U	1.000	pci/L	U	*U	1.000	pci/L	U	*U	1.000	pci/L	U
U-TOTAL	*U	6.020	ug/L	-	*U	1.740	ug/L	-	*U	3.030	ug/L	-

TABLE F-11A
(Continued)

PHASE I - RADIOLOGICAL PARAMETERS

BORING NUMBER		3065				3065				3065		
SAMPLE NUMBER		003995				004249				004098		
SAMPLING DATE		01/25/89				04/09/90				05/31/89		
RADIOLOGICAL PARAMETERS	FLTD	RESULTS	UNITS	VQ	FLTD	RESULTS	UNITS	VQ	FLTD	RESULTS	UNITS	VQ
CS-137	*U	20.000	pci/L	R	*U	20.000	pci/L	R	*U	20.000	pci/L	R
NP-237	*U	1.000	pci/L	U	*U	1.000	pci/L	U	*U	1.000	pci/L	U
PU-238	*U	1.000	pci/L	U	*U	1.000	pci/L	U	*U	1.000	pci/L	U
PU-239/240	*U	1.000	pci/L	U	*U	1.000	pci/L	U	*U	1.000	pci/L	U
RA-226	*U	1.000	pci/L	R	*U	1.000	pci/L	UJ	*U	1.000	pci/L	U
RA-228	*U	3.000	pci/L	R	*U	3.000	pci/L	R	*U	3.000	pci/L	U
RU-106	*U	150.000	pci/L	R	*U	150.000	pci/L	R	*U	150.000	pci/L	R
SR-90	*U	5.000	pci/L	U	*U	5.000	pci/L	U	*U	5.000	pci/L	U
TC-99	*U	30.000	pci/L	U	*U	30.000	pci/L	UJ	*U	30.000	pci/L	U
TH-228	*U	1.000	pci/L	UJ	*U	1.000	pci/L	U	*U	1.000	pci/L	U
TH-230	*U	1.000	pci/L	U	*U	1.000	pci/L	U	*U	1.000	pci/L	U
TH-232	*U	1.000	pci/L	U	*U	1.000	pci/L	U	*U	1.000	pci/L	U
TH-TOTAL	*U	2.000	ug/L	U	*U	1.800	ug/L	U	*U	2.000	ug/L	U
U-234	*U	1.000	pci/L	U	*U	1.000	pci/L	U	*U	1.000	pci/L	U
U-235/236	*U	1.000	pci/L	U	*U	1.000	pci/L	U	*U	1.000	pci/L	U
U-238	*U	1.000	pci/L	U	*U	1.000	pci/L	U	*U	1.000	pci/L	U
U-TOTAL	*U	1.000	ug/L	U	*U	0.793	ug/L	J	*U	1.000	ug/L	U

0804

5174

TABLE F-11A
(Continued)

PHASE I - RADIOLOGICAL PARAMETERS

BORING NUMBER		3385				3385				4014			
SAMPLE NUMBER		004363				004309				003871			
SAMPLING DATE		01/10/91				07/24/90				01/31/89			
RADIOLOGICAL PARAMETERS	FLTD	RESULTS	UNITS	VQ	FLTD	RESULTS	UNITS	VQ	FLTD	RESULTS	UNITS	VQ
CS-137	*U	20.000	pci/L	R	*U	20.000	pci/L	R	*U	20.000	pci/L	R
NP-237	*U	2.400	pci/L	D	*U	1.000	pci/L	U	*U	1.000	pci/L	U
PU-238	*U	1.000	pci/L	U	*U	1.000	pci/L	U	*U	1.000	pci/L	U
PU-239/240	*U	1.000	pci/L	U	*U	1.000	pci/L	U	*U	1.000	pci/L	U
RA-226	*U	1.000	pci/L	U		NA			*U	1.000	pci/L	U
RA-228	*U	3.000	pci/L	UJ		NA			*U	3.000	pci/L	UJ
RU-106	*U	150.000	pci/L	R	*U	150.000	pci/L	R	*U	150.000	pci/L	R
SR-90	*U	5.000	pci/L	UJ		NA			*U	5.000	pci/L	U
TC-99	*U	31.000	pci/L	D		NA			*U	30.000	pci/L	UJ
TH-228	*U	1.210	pci/L	J	*U	1.000	pci/L	UJ	*U	1.000	pci/L	U
TH-230	*U	1.000	pci/L	U	*U	2.210	pci/L	J	*U	1.000	pci/L	U
TH-232	*U	1.000	pci/L	U	*U	1.040	pci/L	J	*U	1.000	pci/L	U
TH-TOTAL	*U	2.400	ug/L	U	*U	9.380	ug/L	J	*U	2.000	ug/L	U
U-234	*U	1.370	pci/L	-	*U	1.130	pci/L	R	*U	1.000	pci/L	U
U-235/236	*U	1.000	pci/L	U	*U	1.000	pci/L	R	*U	1.000	pci/L	U
U-238	*U	1.000	pci/L	U	*U	1.000	pci/L	R	*U	1.000	pci/L	U
U-TOTAL	*U	2.940	ug/L	-	*U	2.280	ug/L	R	*U	1.000	ug/L	U

TABLE F-11A
(Continued)

PHASE I - RADIOLOGICAL PARAMETERS

BORING NUMBER		4014				4014				4016			
SAMPLE NUMBER		004089				066866				003996			
SAMPLING DATE		05/01/89				12/13/89				01/20/89			
RADIOLOGICAL PARAMETERS	FLTD	RESULTS	UNITS	VQ	FLTD	RESULTS	UNITS	VQ	FLTD	RESULTS	UNITS	VQ
CS-137	*U	20.000	pci/L	R		NA			*U	20.000	pci/L	R
NP-237	*U	1.000	pci/L	UJ		NA			*U	1.000	pci/L	U
PU-238	*U	1.000	pci/L	U		NA			*U	1.000	pci/L	U
PU-239/240	*U	1.000	pci/L	U		NA			*U	1.000	pci/L	U
RA-226	*U	1.000	pci/L	U		NA			*U	1.000	pci/L	U
RA-228	*U	3.000	pci/L	UJ		NA			*U	3.000	pci/L	U
RU-106	*U	150.000	pci/L	R		NA			*U	150.000	pci/L	R
SR-90	*U	5.000	pci/L	U		NA			*U	5.000	pci/L	U
TC-99	*U	30.000	pci/L	U		NA			*U	30.000	pci/L	U
TC-99		NA			UNKN	30.000	pci/L	U		NA		
TH-228	*U	1.000	pci/L	U		NA			*U	1.000	pci/L	U
TH-228		NA			UNKN	1.000	pci/L	U		NA		
TH-230	*U	1.000	pci/L	U		NA			*U	1.000	pci/L	U
TH-230		NA			UNKN	1.000	pci/L	U		NA		
TH-232	*U	1.000	pci/L	U		NA			*U	1.000	pci/L	U
TH-TOTAL	*U	4.000	ug/L	U		NA			*U	9.000	ug/L	D
U-234	*U	1.000	pci/L	U		NA			*U	1.000	pci/L	U
U-234		NA			UNKN	1.000	pci/L	U		NA		
U-235		NA			UNKN	1.000	pci/L	U		NA		
U-235/236	*U	1.000	pci/L	U		NA			*U	1.000	pci/L	U
U-238	*U	1.000	pci/L	U		NA			*U	1.000	pci/L	U
U-238		NA			UNKN	1.000	pci/L	U		NA		
U-TOTAL	*U	1.000	ug/L	U		NA			*U	1.000	ug/L	UJ
U-TOTAL		NA			UNKN	1.000	ug/L	U		NA		

TABLE F-11A
(Continued)

PHASE I - CHEMICAL PARAMETERS

BORING NUMBER		1046					1046					1046			
SAMPLE NUMBER		003089					003370					003649			
SAMPLING DATE		04/13/88					07/24/88					10/23/88			
CHEMICAL PARAMETERS	FLTD	RESULTS	UNITS	L	VQ	FLTD	RESULTS	UNITS	L	VQ	FLTD	RESULTS	UNITS	L	VQ
Inorganics															
Arsenic		NA				*F	0.010	mg/L	C	U		NA			
Arsenic	FILT	0.200	mg/L	C	UJ	NA					FILT	0.002	mg/L	C	U
Barium		NA				*F	0.500	mg/L	C	U		NA			
Barium	FILT	0.119	mg/L	C	R	NA					FILT	0.102	mg/L	C	-
Cadmium		NA				*F	0.005	mg/L	C	U		NA			
Cadmium	FILT	0.002	mg/L	C	U	NA					FILT	0.002	mg/L	C	U
Calcium		NA				*F	110.000	mg/L	C	-		NA			
Calcium	FILT	103.000	mg/L	C	J	NA					FILT	99.900	mg/L	C	-
Chromium		NA				*F	0.010	mg/L	C	U		NA			
Chromium	FILT	0.020	mg/L	C	U	NA					FILT	0.020	mg/L	C	U
Copper		NA				*F	0.010	mg/L	C	U		NA			
Copper	FILT	0.010	mg/L	C	UJ	NA					FILT	0.010	mg/L	C	U
Iron		NA				*F	0.100	mg/L	C	U		NA			
Iron	FILT	0.005	mg/L	C	U	NA					FILT	0.051	mg/L	C	-
Lead		NA				*F	0.005	mg/L	C	U		NA			
Lead	FILT	0.050	mg/L	C	UJ	NA					FILT	0.003	mg/L	C	J
Magnesium		NA				*F	41.000	mg/L	C	-		NA			
Magnesium	FILT	41.200	mg/L	C	J	NA					FILT	37.600	mg/L	C	-
Manganese		NA				*F	0.060	mg/L	C	-		NA			
Manganese	FILT	0.167	mg/L	C	-	NA					FILT	0.057	mg/L	C	-
Mercury		NA				*F	0.000	mg/L	C	U		NA			
Mercury	FILT	0.000	mg/L	C	UJ	NA					FILT	0.000	mg/L	C	UJ
Molybdenum		NA				*F	0.050	mg/L	C	U		NA			
Molybdenum	FILT	0.020	mg/L	C	U	NA					FILT	0.020	mg/L	C	U
Nickel		NA				*F	0.030	mg/L	C	U		NA			
Nickel	FILT	0.020	mg/L	C	U	NA					FILT	0.020	mg/L	C	U
Potassium		NA				*F	10.000	mg/L	C	-		NA			
Potassium	FILT	1.010	mg/L	C	J	NA					FILT	1.120	mg/L	C	-
Selenium		NA				*F	0.005	mg/L	C	UJ		NA			
Selenium	FILT	0.200	mg/L	C	UJ	NA					FILT	0.002	mg/L	C	J
Silver		NA				*F	0.010	mg/L	C	U		NA			
Silver	FILT	0.010	mg/L	C	UJ	NA					FILT	0.001	mg/L	C	U
Sodium		NA				*F	11.000	mg/L	C	-		NA			
Sodium	FILT	6.890	mg/L	C	J	NA					FILT	6.500	mg/L	C	-
General Chemistry															
Ammonia	UNFI	0.100	mg/L	C	UJ	UNFI	0.020	mg/L	C	U	UNFI	0.100	mg/L	C	U
Chloride	UNFI	2.700	mg/L	C	J	UNFI	21.000	mg/L	C	J	UNFI	20.000	mg/L	C	-
Fluoride	UNFI	0.380	mg/L	C	-	UNFI	0.330	mg/L	C	J	UNFI	0.350	mg/L	C	-
Nitrate	UNFI	0.100	mg/L	C	R	UNFI	0.310	mg/L	C	J	UNFI	0.100	mg/L	C	UJ
Phenols	UNFI	0.020	mg/L	C	-	UNFI	0.002	mg/L	C	U	UNFI	0.020	mg/L	C	J

TABLE F-11A
(Continued)

PHASE I - CHEMICAL PARAMETERS

BORING NUMBER		1046				1046				1046			
SAMPLE NUMBER		003089				003370				003649			
SAMPLING DATE		04/13/88				07/24/88				10/23/88			
CHEMICAL PARAMETERS	FLTD	RESULTS	UNITS	L	VQ	FLTD	RESULTS	UNITS	L	VQ	FLTD	RESULTS	UNITS	L	VQ
General Chemistry															
Phosphorus	UNFI	0.050	mg/L	C	UJ	UNFI	0.100	mg/L	C	-	UNFI	0.880	mg/L	C	-
Sulfate	UNFI	12.000	mg/L	C	J	UNFI	89.000	mg/L	C	-	UNFI	65.000	mg/L	C	J
Total Kjeldahl Nitrogen		NA					NA				UNFI	0.500	mg/L	C	UJ
Total Organic Halides		NA					NA				UNFI	0.050	mg/L	C	U
Total Organic Nitrogen	UNFI	0.100	mg/L	C	UJ	UNFI	0.050	mg/L	C	R	UNFI	0.500	mg/L	C	-

5174
FEMP OU2-4 DRAFT
February 18, 1994

TABLE F-11A
(Continued)

PHASE I - CHEMICAL PARAMETERS

BORING NUMBER		1046				1065				1065			
SAMPLE NUMBER		003854				003136				003860			
SAMPLING DATE		01/22/89				04/14/88				01/22/89			
CHEMICAL PARAMETERS	FLTD	RESULTS	UNITS	L	VQ	FLTD	RESULTS	UNITS	L	VQ	FLTD	RESULTS	UNITS	L	VQ
Inorganics															
Arsenic	FILT	0.002	mg/L	C	U	FILT	0.200	mg/L	C	UJ	FILT	0.002	mg/L	C	U
Barium	FILT	0.069	mg/L	C	-	FILT	0.034	mg/L	C	J	FILT	0.042	mg/L	C	-
Cadmium	FILT	0.008	mg/L	C	-	FILT	0.005	mg/L	C	UJ	FILT	0.006	mg/L	C	-
Calcium	FILT	122.000	mg/L	C	-	FILT	89.000	mg/L	C	J	FILT	97.400	mg/L	C	-
Chromium	FILT	0.027	mg/L	C	-	FILT	0.020	mg/L	C	UJ	FILT	0.023	mg/L	C	-
Copper	FILT	0.013	mg/L	C	-	FILT	0.010	mg/L	C	UJ	FILT	0.019	mg/L	C	-
Iron	FILT	0.064	mg/L	C	-	FILT	0.005	mg/L	C	UJ	FILT	0.045	mg/L	C	U
Lead	FILT	0.002	mg/L	C	UJ	FILT	0.050	mg/L	C	UJ	FILT	0.002	mg/L	C	UJ
Magnesium	FILT	48.600	mg/L	C	-	FILT	29.500	mg/L	C	J	FILT	31.300	mg/L	C	-
Manganese	FILT	0.007	mg/L	C	-	FILT	0.020	mg/L	C	UJ	FILT	0.008	mg/L	C	-
Mercury	FILT	0.000	mg/L	C	U	FILT	0.000	mg/L	C	UJ	FILT	0.000	mg/L	C	U
Molybdenum	FILT	0.020	mg/L	C	U	FILT	0.020	mg/L	C	UJ	FILT	0.020	mg/L	C	U
Nickel	FILT	0.024	mg/L	C	-	FILT	0.020	mg/L	C	UJ	FILT	0.020	mg/L	C	U
Potassium	FILT	1.000	mg/L	C	-	FILT	1.050	mg/L	C	J	FILT	0.891	mg/L	C	-
Selenium	FILT	0.005	mg/L	C	U	FILT	0.200	mg/L	C	UJ	FILT	0.002	mg/L	C	U
Silver	FILT	0.001	mg/L	C	U	FILT	0.040	mg/L	C	J	FILT	0.001	mg/L	C	U
Sodium	FILT	9.980	mg/L	C	-	FILT	5.710	mg/L	C	J	FILT	8.600	mg/L	C	-
Volatile Organics															
1,1,1-Trichloroethane		NA				UNFI	5.000	ug/L	D	UJ		NA			
1,1,2,2-Tetrachloroethane		NA				UNFI	5.000	ug/L	D	UJ		NA			
1,1,2-Trichloroethane		NA				UNFI	5.000	ug/L	D	UJ		NA			
1,1-Dichloroethane		NA				UNFI	5.000	ug/L	D	UJ		NA			
1,1-Dichloroethene		NA				UNFI	5.000	ug/L	D	UJ		NA			
1,2-Dichloroethane		NA				UNFI	5.000	ug/L	D	UJ		NA			
1,2-Dichloroethene		NA				UNFI	5.000	ug/L	D	UJ		NA			
1,2-Dichloropropane		NA				UNFI	5.000	ug/L	D	UJ		NA			
2-Butanone		NA				UNFI	10.000	ug/L	D	R		NA			
2-Hexanone		NA				UNFI	10.000	ug/L	D	UJ		NA			
4-Methyl-2-pentanone		NA				UNFI	10.000	ug/L	D	UJ		NA			
Acetone		NA				UNFI	10.000	ug/L	D	R		NA			
Benzene		NA				UNFI	5.000	ug/L	D	UJ		NA			
Bromodichloromethane		NA				UNFI	5.000	ug/L	D	UJ		NA			
Bromoform		NA				UNFI	5.000	ug/L	D	UJ		NA			
Bromomethane		NA				UNFI	10.000	ug/L	D	UJ		NA			
Carbon Tetrachloride		NA				UNFI	5.000	ug/L	D	UJ		NA			
Carbon disulfide		NA				UNFI	5.000	ug/L	D	UJ		NA			
Chlorobenzene		NA				UNFI	5.000	ug/L	D	UJ		NA			
Chloroethane		NA				UNFI	10.000	ug/L	D	UJ		NA			
Chloroform		NA				UNFI	5.000	ug/L	D	UJ		NA			
Chloromethane		NA				UNFI	10.000	ug/L	D	UJ		NA			

0309

TABLE F-11A
(Continued)

PHASE I - CHEMICAL PARAMETERS

BORING NUMBER		1046				1065				1065			
SAMPLE NUMBER		003854				003136				003860			
SAMPLING DATE		01/22/89				04/14/88				01/22/89			
CHEMICAL PARAMETERS	FLTD	RESULTS	UNITS	L	VQ	FLTD	RESULTS	UNITS	L	VQ	FLTD	RESULTS	UNITS	L	VQ
Volatile Organics															
Dibromochloromethane		NA				UNFI	5.000	ug/L	D	UJ		NA			
Ethylbenzene		NA				UNFI	5.000	ug/L	D	UJ		NA			
Methylene chloride		NA				UNFI	5.000	ug/L	D	UJ		NA			
Styrene		NA				UNFI	5.000	ug/L	D	UJ		NA			
Tetrachloroethene		NA				UNFI	5.000	ug/L	D	UJ		NA			
Toluene		NA				UNFI	5.000	ug/L	D	UJ		NA			
Trichloroethene		NA				UNFI	5.000	ug/L	D	UJ		NA			
Vinyl Acetate		NA				UNFI	10.000	ug/L	D	UJ		NA			
Vinyl chloride		NA				UNFI	10.000	ug/L	D	UJ		NA			
Xylenes, Total		NA				UNFI	5.000	ug/L	D	UJ		NA			
cis-1,3-Dichloropropene		NA				UNFI	5.000	ug/L	D	UJ		NA			
trans-1,3-Dichloropropene		NA				UNFI	5.000	ug/L	D	UJ		NA			
General Chemistry															
Ammonia	UNFI	0.100	mg/L	C	U	UNFI	0.100	mg/L	C	U	UNFI	0.100	mg/L	C	U
Chloride	UNFI	1.500	mg/L	C	U	UNFI	0.500	mg/L	C	UJ	UNFI	4.800	mg/L	C	-
Fluoride	UNFI	0.300	mg/L	C	-	UNFI	0.350	mg/L	C	-	UNFI	0.400	mg/L	C	-
Nitrate	UNFI	0.060	mg/L	C	J	UNFI	0.100	mg/L	C	UJ	UNFI	0.060	mg/L	C	J
Phenols	UNFI	0.010	mg/L	C	U	UNFI	0.020	mg/L	C	-	UNFI	0.010	mg/L	C	U
Phosphorus	UNFI	0.400	mg/L	C	-	UNFI	0.050	mg/L	C	UJ	UNFI	0.100	mg/L	C	U
Sulfate	UNFI	120.000	mg/L	C	-	UNFI	10.000	mg/L	C	J	UNFI	89.000	mg/L	C	-
Total Kjeldahl Nitrogen	UNFI	0.200	mg/L	C	-		NA				UNFI	0.100	mg/L	C	U
Total Organic Halides	UNFI	0.010	mg/L	C	U		NA				UNFI	0.010	mg/L	C	U
Total Organic Nitrogen	UNFI	0.200	mg/L	C	-	UNFI	0.100	mg/L	C	-	UNFI	0.100	mg/L	C	U

0810

FER\OU2\DRAFT
February 18, 1994

TABLE F-11A
(Continued)

PHASE I - CHEMICAL PARAMETERS

BORING NUMBER		1433					1433					1516				
SAMPLE NUMBER		047040					047044					046939				
SAMPLING DATE		11/16/92					11/30/92					07/17/90				
CHEMICAL PARAMETERS	FLTD	RESULTS	UNITS	L		VQ	FLTD	RESULTS	UNITS	L		VQ	FLTD	RESULTS	UNITS	L	VQ
Inorganics																	
Aluminum	FILT	0.104	mg/L	D		U		NA						NA			
Aluminum		NA					U	0.079	mg/L	D		U		NA			
Antimony	FILT	0.005	mg/L	D		U		NA						NA			
Antimony		NA					U	0.005	mg/L	D		U		NA			
Arsenic	FILT	0.003	mg/L	D		U		NA						NA			
Arsenic		NA					U	0.002	mg/L	D		U		NA			
Barium	FILT	0.080	mg/L	D		-		NA						NA			
Barium		NA					U	0.080	mg/L	D		-		NA			
Beryllium	FILT	0.002	mg/L	D		U		NA						NA			
Beryllium		NA					U	0.002	mg/L	D		U		NA			
Cadmium	FILT	0.005	mg/L	D		U		NA						NA			
Cadmium		NA					U	0.005	mg/L	D		U		NA			
Calcium	FILT	129.000	mg/L	D		-		NA						NA			
Calcium		NA					U	127.000	mg/L	D		-		NA			
Chromium	FILT	0.010	mg/L	D		U		NA						NA			
Chromium		NA					U	0.010	mg/L	D		U		NA			
Cobalt	FILT	0.010	mg/L	D		U		NA						NA			
Cobalt		NA					U	0.010	mg/L	D		U		NA			
Copper	FILT	0.031	mg/L	D		-		NA						NA			
Copper		NA					U	0.017	mg/L	D		-		NA			
Cyanide	U	0.002	mg/L	D		U	U	0.002	mg/L	D		U		NA			
Iron	FILT	0.020	mg/L	D		U		NA						NA			
Iron		NA					U	0.020	mg/L	D		U		NA			
Lead	FILT	0.003	mg/L	D		U		NA						NA			
Lead		NA					U	0.002	mg/L	D		UJ		NA			
Magnesium	FILT	36.200	mg/L	D		-		NA						NA			
Magnesium		NA					U	38.700	mg/L	D		-		NA			
Manganese	FILT	0.111	mg/L	D		-		NA						NA			
Manganese		NA					U	0.050	mg/L	D		-		NA			
Mercury	FILT	0.000	mg/L	D		U		NA						NA			
Mercury		NA					U	0.000	mg/L	D		U		NA			
Molybdenum	FILT	0.020	mg/L	D		U		NA						NA			
Molybdenum		NA					U	0.020	mg/L	D		U		NA			
Nickel	FILT	0.020	mg/L	D		U		NA						NA			
Nickel		NA					U	0.020	mg/L	D		U		NA			
Potassium	FILT	2.840	mg/L	D		-		NA						NA			
Potassium		NA					U	2.510	mg/L	D		-		NA			
Selenium	FILT	0.002	mg/L	D		U		NA						NA			
Selenium		NA					U	0.002	mg/L	D		U		NA			
Silicon	FILT	10.500	mg/L	D		-		NA						NA			
Silicon		NA					U	10.200	mg/L	D		-		NA			
Silver	FILT	0.010	mg/L	D		U		NA						NA			

TABLE F-11A
(Continued)

PHASE I - CHEMICAL PARAMETERS

BORING NUMBER		1433					1433					1516			
SAMPLE NUMBER		047040					047044					046939			
SAMPLING DATE		11/16/92					11/30/92					07/17/90			
CHEMICAL PARAMETERS	FLTD	RESULTS	UNITS	L	VQ		FLTD	RESULTS	UNITS	L	VQ		FLTD	RESULTS	UNITS	L	VQ
Inorganics																	
Silver		NA					U	0.010	mg/L	D	U			NA			
Sodium	FILT	9.090	mg/L	D	-			NA						NA			
Sodium		NA					U	9.460	mg/L	D	-			NA			
Thallium	FILT	0.002	mg/L	D	U			NA						NA			
Thallium		NA					U	0.002	mg/L	D	U			NA			
Vanadium	FILT	0.010	mg/L	D	U			NA						NA			
Vanadium		NA					U	0.010	mg/L	D	U			NA			
Zinc	FILT	0.010	mg/L	D	-			NA						NA			
Zinc		NA					U	0.008	mg/L	D	-			NA			
Volatile Organics																	
1,1,1-Trichloroethane	U	5.000	ug/L	D	U			NA						NA			
1,1,2,2-Tetrachloroethane	U	5.000	ug/L	D	U		U	5.000	ug/L	D	U			NA			
1,1,2-Trichloroethane	U	5.000	ug/L	D	U		U	5.000	ug/L	D	U			NA			
1,1-Dichloroethane	U	5.000	ug/L	D	U			NA						NA			
1,1-Dichloroethene	U	5.000	ug/L	D	U			NA						NA			
1,2-Dichloroethane	U	5.000	ug/L	D	U			NA						NA			
1,2-Dichloroethene	U	5.000	ug/L	D	U			NA						NA			
1,2-Dichloropropane	U	5.000	ug/L	D	U			NA						NA			
2-Butanone	U	10.000	ug/L	D	UJ			NA						NA			
2-Hexanone	U	10.000	ug/L	D	UJ		U	10.000	ug/L	D	U			NA			
4-Methyl-2-pentanone	U	10.000	ug/L	D	UJ		U	10.000	ug/L	D	U			NA			
Acetone	U	10.000	ug/L	D	UJ			NA						NA			
Benzene	U	5.000	ug/L	D	U		U	5.000	ug/L	D	U			NA			
Bromodichloromethane	U	5.000	ug/L	D	U			NA						NA			
Bromoform	U	5.000	ug/L	D	U		U	5.000	ug/L	D	U			NA			
Bromomethane	U	10.000	ug/L	D	U			NA						NA			
Carbon Tetrachloride	U	5.000	ug/L	D	U			NA						NA			
Carbon disulfide	U	5.000	ug/L	D	U			NA						NA			
Chlorobenzene	U	5.000	ug/L	D	U		U	5.000	ug/L	D	U			NA			
Chloroethane	U	10.000	ug/L	D	U			NA						NA			
Chloroform	U	5.000	ug/L	D	U			NA						NA			
Chloromethane	U	10.000	ug/L	D	U			NA						NA			
Dibromochloromethane	U	5.000	ug/L	D	U		U	5.000	ug/L	D	U			NA			
Ethylbenzene	U	5.000	ug/L	D	U		U	5.000	ug/L	D	U			NA			
Methylene chloride	U	5.000	ug/L	D	UJ			NA						NA			
Styrene	U	5.000	ug/L	D	U		U	5.000	ug/L	D	U			NA			
Tetrachloroethene	U	5.000	ug/L	D	U		U	5.000	ug/L	D	U			NA			
Toluene	U	5.000	ug/L	D	U		U	5.000	ug/L	D	U			NA			
Trichloroethene	U	5.000	ug/L	D	U			NA						NA			
Vinyl Acetate	U	10.000	ug/L	D	UJ			NA						NA			

0812

5174
FEMP-OU4 DRAFT
February 18, 1994

TABLE F-11A
(Continued)

PHASE I - CHEMICAL PARAMETERS

BORING NUMBER		1433					1433					1516				
SAMPLE NUMBER		047040					047044					046939				
SAMPLING DATE		11/16/92					11/30/92					07/17/90				
CHEMICAL PARAMETERS	FLTD	RESULTS	UNITS	L	VQ		FLTD	RESULTS	UNITS	L	VQ	FLTD	RESULTS	UNITS	L	VQ
Volatile Organics																
Vinyl chloride	U	10.000	ug/L	D	U			NA					NA			
Xylenes, Total	U	5.000	ug/L	D	U		U	5.000	ug/L	D	U		NA			
cis-1,3-Dichloropropene	U	5.000	ug/L	D	U			NA					NA			
trans-1,3-Dichloropropene	U	5.000	ug/L	D	U		U	5.000	ug/L	D	U		NA			
Semivolatile Organics																
1,2,4-Trichlorobenzene	U	10.000	ug/L	D	U		U	10.000	ug/L	D	U		NA			
1,2-Dichlorobenzene	U	10.000	ug/L	D	U		U	10.000	ug/L	D	U		NA			
1,3-Dichlorobenzene	U	10.000	ug/L	D	U		U	10.000	ug/L	D	U		NA			
1,4-Dichlorobenzene	U	10.000	ug/L	D	U		U	10.000	ug/L	D	U		NA			
2,4,5-Trichlorophenol	U	50.000	ug/L	D	U		U	50.000	ug/L	D	U		NA			
2,4,6-Trichlorophenol	U	10.000	ug/L	D	U		U	10.000	ug/L	D	U		NA			
2,4-Dichlorophenol	U	10.000	ug/L	D	U		U	10.000	ug/L	D	U		NA			
2,4-Dimethylphenol	U	10.000	ug/L	D	U		U	10.000	ug/L	D	U		NA			
2,4-Dinitrophenol	U	50.000	ug/L	D	UJ		U	50.000	ug/L	D	U		NA			
2,4-Dinitrotoluene	U	10.000	ug/L	D	U		U	10.000	ug/L	D	U		NA			
2,6-Dinitrotoluene	U	10.000	ug/L	D	U		U	10.000	ug/L	D	U		NA			
2-Chloronaphthalene	U	10.000	ug/L	D	U		U	10.000	ug/L	D	U		NA			
2-Chlorophenol	U	10.000	ug/L	D	U		U	10.000	ug/L	D	U		NA			
2-Methylnaphthalene	U	10.000	ug/L	D	U		U	10.000	ug/L	D	U		NA			
2-Methylphenol	U	10.000	ug/L	D	U		U	10.000	ug/L	D	U		NA			
2-Nitroaniline	U	50.000	ug/L	D	U		U	50.000	ug/L	D	U		NA			
2-Nitrophenol	U	10.000	ug/L	D	U		U	10.000	ug/L	D	U		NA			
3,3'-Dichlorobenzidine	U	20.000	ug/L	D	U		U	20.000	ug/L	D	U		NA			
3-Nitroaniline	U	50.000	ug/L	D	U		U	50.000	ug/L	D	U		NA			
4,6-Dinitro-2-methylphenol	U	50.000	ug/L	D	UJ		U	50.000	ug/L	D	U		NA			
4-Bromophenyl phenyl ether	U	10.000	ug/L	D	U		U	10.000	ug/L	D	U		NA			
4-Chloro-3-methylphenol	U	10.000	ug/L	D	U		U	10.000	ug/L	D	U		NA			
4-Chlorophenylphenyl ether	U	10.000	ug/L	D	U		U	10.000	ug/L	D	U		NA			
4-Methylphenol	U	10.000	ug/L	D	U		U	10.000	ug/L	D	U		NA			
4-Nitroaniline	U	50.000	ug/L	D	U		U	50.000	ug/L	D	U		NA			
4-Nitrophenol	U	50.000	ug/L	D	U		U	50.000	ug/L	D	U		NA			
Acenaphthene	U	10.000	ug/L	D	U		U	10.000	ug/L	D	U		NA			
Acenaphthylene	U	10.000	ug/L	D	U		U	10.000	ug/L	D	U		NA			
Anthracene	U	10.000	ug/L	D	U		U	10.000	ug/L	D	U		NA			
Benzo(a)anthracene	U	10.000	ug/L	D	U		U	10.000	ug/L	D	U		NA			
Benzo(a)pyrene	U	10.000	ug/L	D	U		U	10.000	ug/L	D	U		NA			
Benzo(b)fluoranthene	U	10.000	ug/L	D	U		U	10.000	ug/L	D	U		NA			
Benzo(g,h,i)perylene	U	10.000	ug/L	D	U		U	10.000	ug/L	D	U		NA			
Benzo(k)fluoranthene	U	10.000	ug/L	D	U		U	10.000	ug/L	D	U		NA			
Benzoic acid	U	50.000	ug/L	D	U		U	50.000	ug/L	D	U		NA			

TABLE F-11A
(Continued)

PHASE I - CHEMICAL PARAMETERS

BORING NUMBER		1433					1433					1516				
SAMPLE NUMBER		047040					047044					046939				
SAMPLING DATE		11/16/92					11/30/92					07/17/90				
CHEMICAL PARAMETERS	FLTD	RESULTS	UNITS	L	VQ		FLTD	RESULTS	UNITS	L	VQ	FLTD	RESULTS	UNITS	L	VQ
Semivolatile Organics																
Benzyl alcohol	U	10.000	ug/L	D	U		U	10.000	ug/L	D	U		NA			
Butyl benzyl phthalate	U	10.000	ug/L	D	U		U	10.000	ug/L	D	U		NA			
Chrysene	U	10.000	ug/L	D	U		U	10.000	ug/L	D	U		NA			
Di-n-butyl phthalate	U	10.000	ug/L	D	U		U	10.000	ug/L	D	U		NA			
Di-n-octyl phthalate	U	10.000	ug/L	D	U		U	10.000	ug/L	D	U		NA			
Dibenzo(a,h)anthracene	U	10.000	ug/L	D	U		U	10.000	ug/L	D	U		NA			
Dibenzofuran	U	10.000	ug/L	D	U		U	10.000	ug/L	D	U		NA			
Diethyl phthalate	U	10.000	ug/L	D	U		U	10.000	ug/L	D	U		NA			
Dimethyl phthalate	U	10.000	ug/L	D	U		U	10.000	ug/L	D	U		NA			
Fluoranthene	U	10.000	ug/L	D	U		U	10.000	ug/L	D	U		NA			
Fluorene	U	10.000	ug/L	D	U		U	10.000	ug/L	D	U		NA			
Hexachlorobenzene	U	10.000	ug/L	D	U		U	10.000	ug/L	D	U		NA			
Hexachlorobutadiene	U	10.000	ug/L	D	U		U	10.000	ug/L	D	U		NA			
Hexachlorocyclopentadiene	U	10.000	ug/L	D	U		U	10.000	ug/L	D	U		NA			
Hexachloroethane	U	10.000	ug/L	D	U		U	10.000	ug/L	D	U		NA			
Indeno(1,2,3-cd)pyrene	U	10.000	ug/L	D	U		U	10.000	ug/L	D	U		NA			
Isophorone	U	10.000	ug/L	D	U		U	10.000	ug/L	D	U		NA			
N-Nitroso-di-n-propylamine	U	10.000	ug/L	D	U		U	10.000	ug/L	D	U		NA			
N-Nitrosodiphenylamine	U	10.000	ug/L	D	U		U	10.000	ug/L	D	U		NA			
Naphthalene	U	10.000	ug/L	D	U		U	10.000	ug/L	D	U		NA			
Nitrobenzene	U	10.000	ug/L	D	U		U	10.000	ug/L	D	U		NA			
Pentachlorophenol	U	50.000	ug/L	D	U		U	50.000	ug/L	D	U		NA			
Phenanthrene	U	10.000	ug/L	D	U		U	10.000	ug/L	D	U		NA			
Phenol	U	10.000	ug/L	D	U		U	10.000	ug/L	D	U		NA			
Pyrene	U	10.000	ug/L	D	U		U	10.000	ug/L	D	U		NA			
Tributyl phosphate	U	10.000	ug/L	D	U		U	10.000	ug/L	D	U		NA			
bis(2-Chloroethoxy)methane	U	10.000	ug/L	D	U		U	10.000	ug/L	D	U		NA			
bis(2-Chloroethyl)ether	U	10.000	ug/L	D	U		U	10.000	ug/L	D	U		NA			
bis(2-Chloroisopropyl) ether	U	10.000	ug/L	D	U		U	10.000	ug/L	D	U		NA			
bis(2-Ethylhexyl) phthalate	U	10.000	ug/L	D	U		U	10.000	ug/L	D	U		NA			
p-Chloroaniline	U	10.000	ug/L	D	U		U	10.000	ug/L	D	U		NA			
Pesticide Organics/PCBs																
4,4'-DDD	U	0.100	ug/L	D	U		U	0.100	ug/L	D	U		NA			
4,4'-DDE	U	0.100	ug/L	D	U		U	0.100	ug/L	D	U		NA			
4,4'-DDT	U	0.100	ug/L	D	U		U	0.100	ug/L	D	U		NA			
Aldrin	U	0.050	ug/L	D	U		U	0.050	ug/L	D	U		NA			
Aroclor-1016	U	0.500	ug/L	D	U		U	0.500	ug/L	D	U		NA			
Aroclor-1221	U	0.500	ug/L	D	U		U	0.500	ug/L	D	U		NA			
Aroclor-1232	U	0.500	ug/L	D	U		U	0.500	ug/L	D	U		NA			
Aroclor-1242	U	0.500	ug/L	D	U		U	0.500	ug/L	D	U		NA			

0314

5174

TABLE F-11A
(Continued)

PHASE I - CHEMICAL PARAMETERS

BORING NUMBER		1433					1433					1516				
SAMPLE NUMBER		047040					047044					046939				
SAMPLING DATE		11/16/92					11/30/92					07/17/90				
CHEMICAL PARAMETERS	FLTD	RESULTS	UNITS	L	VQ		FLTD	RESULTS	UNITS	L	VQ	FLTD	RESULTS	UNITS	L	VQ
Pesticide Organics/PCBs																
Aroclor-1248	U	0.500	ug/L	D	U		U	0.500	ug/L	D	U		NA			
Aroclor-1254	U	1.000	ug/L	D	U		U	1.000	ug/L	D	U		NA			
Aroclor-1260	U	1.000	ug/L	D	U		U	1.000	ug/L	D	U		NA			
Dieldrin	U	0.100	ug/L	D	U		U	0.100	ug/L	D	U		NA			
Endosulfan II	U	0.100	ug/L	D	U		U	0.100	ug/L	D	U		NA			
Endosulfan sulfate	U	0.100	ug/L	D	U		U	0.100	ug/L	D	U		NA			
Endosulfan-I	U	0.050	ug/L	D	U		U	0.050	ug/L	D	U		NA			
Endrin	U	0.100	ug/L	D	U		U	0.100	ug/L	D	U		NA			
Endrin ketone	U	0.100	ug/L	D	U		U	0.100	ug/L	D	U		NA			
Heptachlor	U	0.050	ug/L	D	U		U	0.050	ug/L	D	U		NA			
Heptachlor epoxide	U	0.050	ug/L	D	U		U	0.050	ug/L	D	U		NA			
Methoxychlor	U	0.500	ug/L	D	U		U	0.500	ug/L	D	U		NA			
Toxaphene	U	1.000	ug/L	D	U		U	1.000	ug/L	D	U		NA			
alpha-BHC	U	0.050	ug/L	D	U		U	0.050	ug/L	D	U		NA			
alpha-Chlordane	U	0.500	ug/L	D	U		U	0.500	ug/L	D	U		NA			
beta-BHC	U	0.050	ug/L	D	U		U	0.050	ug/L	D	U		NA			
delta-BHC	U	0.050	ug/L	D	U		U	0.050	ug/L	D	U		NA			
gamma-BHC (Lindane)	U	0.050	ug/L	D	U		U	0.050	ug/L	D	U		NA			
gamma-Chlordane	U	0.500	ug/L	D	U		U	0.500	ug/L	D	U		NA			
General Chemistry																
Ammonia	U	0.100	mg/L	C	U		U	0.126	mg/L	C	-		NA			
Chloride	U	5.150	mg/L	C	-		U	4.620	mg/L	C	-		NA			
Fluoride	U	1.280	mg/L	C	J		U	1.420	mg/L	C	-		NA			
Nitrate		NA					U	0.220	mg/L	C	-		NA			
Nitrate		NA					NA					UNFI	0.600	mg/L	C	J
Phenols	U	0.010	mg/L	C	U		U	0.010	mg/L	C	U		NA			
Phosphorus	U	0.340	mg/L	C	J		U	0.360	mg/L	C	-		NA			
Sulfate	U	61.200	mg/L	C	-		U	61.400	mg/L	C	U		NA			
Sulfide	U	0.500	mg/L	C	U		U	0.500	mg/L	C	UJ		NA			
Total Organic Carbon	U	4.400	mg/L	C	-		U	3.580	mg/L	C	-		NA			
Total Organic Halides	U	0.014	mg/L	C	-		U	10.000	mg/L	C	UJ		NA			
Total Organic Nitrogen	U	0.288	mg/L	C	-		U	0.143	mg/L	C	-		NA			

0815

TABLE F-11A
(Continued)

PHASE I - CHEMICAL PARAMETERS

BORING NUMBER		1516				1517				1517			
SAMPLE NUMBER		046940				046945				046947			
SAMPLING DATE		08/21/90				07/17/90				08/21/90			
CHEMICAL PARAMETERS	FLTD	RESULTS	UNITS	L	VQ	FLTD	RESULTS	UNITS	L	VQ	FLTD	RESULTS	UNITS	L	VQ
Volatile Organics															
1,1,1-Trichloroethane		NA				UNFI	5.000	ug/L	D	-		NA			
1,1,2,2-Tetrachloroethane		NA				UNFI	5.000	ug/L	D	U		NA			
1,1,2-Trichloroethane		NA				UNFI	5.000	ug/L	D	U		NA			
1,1-Dichloroethane		NA				UNFI	9.000	ug/L	D	-		NA			
1,1-Dichloroethene		NA				UNFI	5.000	ug/L	D	U		NA			
1,2-Dichloroethane		NA				UNFI	5.000	ug/L	D	U		NA			
1,2-Dichloroethene		NA				UNFI	5.000	ug/L	D	-		NA			
1,2-Dichloropropane		NA				UNFI	5.000	ug/L	D	U		NA			
2-Butanone		NA				UNFI	10.000	ug/L	D	UJ		NA			
2-Hexanone		NA				UNFI	10.000	ug/L	D	UJ		NA			
4-Methyl-2-pentanone		NA				UNFI	10.000	ug/L	D	UJ		NA			
Acetone		NA				UNFI	5.000	ug/L	D	J		NA			
Benzene		NA				UNFI	5.000	ug/L	D	U		NA			
Bromodichloromethane		NA				UNFI	5.000	ug/L	D	U		NA			
Bromoform		NA				UNFI	5.000	ug/L	D	UJ		NA			
Bromomethane		NA				UNFI	10.000	ug/L	D	U		NA			
Carbon Tetrachloride		NA				UNFI	5.000	ug/L	D	U		NA			
Carbon disulfide		NA				UNFI	5.000	ug/L	D	U		NA			
Chlorobenzene		NA				UNFI	5.000	ug/L	D	U		NA			
Chloroethane		NA				UNFI	10.000	ug/L	D	U		NA			
Chloroform		NA				UNFI	5.000	ug/L	D	U		NA			
Chloromethane		NA				UNFI	10.000	ug/L	D	U		NA			
Dibromochloromethane		NA				UNFI	5.000	ug/L	D	U		NA			
Ethylbenzene		NA				UNFI	5.000	ug/L	D	U		NA			
Methylene chloride		NA				UNFI	5.000	ug/L	D	U		NA			
Styrene		NA				UNFI	5.000	ug/L	D	U		NA			
Tetrachloroethene		NA				UNFI	5.000	ug/L	D	U		NA			
Toluene		NA				UNFI	5.000	ug/L	D	U		NA			
Trichloroethene		NA				UNFI	7.000	ug/L	D	-		NA			
Vinyl Acetate		NA				UNFI	10.000	ug/L	D	U		NA			
Vinyl chloride		NA				UNFI	10.000	ug/L	D	U		NA			
Xylenes, Total		NA				UNFI	5.000	ug/L	D	U		NA			
cis-1,3-Dichloropropene		NA				UNFI	5.000	ug/L	D	U		NA			
trans-1,3-Dichloropropene		NA				UNFI	5.000	ug/L	D	U		NA			
Semivolatile Organics															
1,2,4-Trichlorobenzene		NA				UNFI	10.000	ug/L	D	U		NA			
1,2-Dichlorobenzene		NA				UNFI	10.000	ug/L	D	U		NA			
1,3-Dichlorobenzene		NA				UNFI	10.000	ug/L	D	U		NA			
1,4-Dichlorobenzene		NA				UNFI	10.000	ug/L	D	U		NA			
2,4,5-Trichlorophenol		NA				UNFI	50.000	ug/L	D	U		NA			

0816

5174

TABLE F-11A
(Continued)

PHASE I - CHEMICAL PARAMETERS

BORING NUMBER		1516				1517				1517			
SAMPLE NUMBER		046940				046945				046947			
SAMPLING DATE		08/21/90				07/17/90				08/21/90			
CHEMICAL PARAMETERS	FLTD	RESULTS	UNITS	L	VQ	FLTD	RESULTS	UNITS	L	VQ	FLTD	RESULTS	UNITS	L	VQ
Semivolatile Organics															
2,4,6-Trichlorophenol		NA				UNFI	10.000	ug/L	D	U		NA			
2,4-Dichlorophenol		NA				UNFI	10.000	ug/L	D	U		NA			
2,4-Dimethylphenol		NA				UNFI	10.000	ug/L	D	U		NA			
2,4-Dinitrophenol		NA				UNFI	50.000	ug/L	D	UJ		NA			
2,4-Dinitrotoluene		NA				UNFI	10.000	ug/L	D	U		NA			
2,6-Dinitrotoluene		NA				UNFI	10.000	ug/L	D	U		NA			
2-Chloronaphthalene		NA				UNFI	10.000	ug/L	D	U		NA			
2-Chlorophenol		NA				UNFI	10.000	ug/L	D	U		NA			
2-Methylnaphthalene		NA				UNFI	10.000	ug/L	D	U		NA			
2-Methylphenol		NA				UNFI	10.000	ug/L	D	U		NA			
2-Nitroaniline		NA				UNFI	50.000	ug/L	D	U		NA			
2-Nitrophenol		NA				UNFI	10.000	ug/L	D	U		NA			
3,3'-Dichlorobenzidine		NA				UNFI	20.000	ug/L	D	U		NA			
3-Nitroaniline		NA				UNFI	50.000	ug/L	D	U		NA			
4,6-Dinitro-2-methylphenol		NA				UNFI	50.000	ug/L	D	U		NA			
4-Bromophenyl phenyl ether		NA				UNFI	10.000	ug/L	D	U		NA			
4-Chloro-3-methylphenol		NA				UNFI	10.000	ug/L	D	U		NA			
4-Chlorophenylphenyl ether		NA				UNFI	10.000	ug/L	D	U		NA			
4-Methylphenol		NA				UNFI	10.000	ug/L	D	U		NA			
4-Nitroaniline		NA				UNFI	50.000	ug/L	D	U		NA			
4-Nitrophenol		NA				UNFI	50.000	ug/L	D	U		NA			
Acenaphthene		NA				UNFI	10.000	ug/L	D	U		NA			
Acenaphthylene		NA				UNFI	10.000	ug/L	D	U		NA			
Anthracene		NA				UNFI	10.000	ug/L	D	U		NA			
Benzo(a)anthracene		NA				UNFI	10.000	ug/L	D	U		NA			
Benzo(a)pyrene		NA				UNFI	10.000	ug/L	D	U		NA			
Benzo(b)fluoranthene		NA				UNFI	10.000	ug/L	D	U		NA			
Benzo(g,h,i)perylene		NA				UNFI	10.000	ug/L	D	U		NA			
Benzo(k)fluoranthene		NA				UNFI	10.000	ug/L	D	U		NA			
Benzoic acid		NA				UNFI	50.000	ug/L	D	U		NA			
Benzyl alcohol		NA				UNFI	10.000	ug/L	D	U		NA			
Butyl benzyl phthalate		NA				UNFI	10.000	ug/L	D	U		NA			
Chrysene		NA				UNFI	10.000	ug/L	D	U		NA			
Di-n-butyl phthalate		NA				UNFI	10.000	ug/L	D	U		NA			
Di-n-octyl phthalate		NA				UNFI	10.000	ug/L	D	U		NA			
Dibenzo(a,h)anthracene		NA				UNFI	10.000	ug/L	D	U		NA			
Dibenzofuran		NA				UNFI	10.000	ug/L	D	U		NA			
Diethyl phthalate		NA				UNFI	10.000	ug/L	D	U		NA			
Dimethyl phthalate		NA				UNFI	10.000	ug/L	D	U		NA			
Fluoranthene		NA				UNFI	10.000	ug/L	D	U		NA			
Fluorene		NA				UNFI	10.000	ug/L	D	U		NA			
Hexachlorobenzene		NA				UNFI	10.000	ug/L	D	U		NA			

TABLE F-11A
(Continued)

PHASE I - CHEMICAL PARAMETERS

BORING NUMBER		1516				1517				1517			
SAMPLE NUMBER		046940				046945				046947			
SAMPLING DATE		08/21/90				07/17/90				08/21/90			
CHEMICAL PARAMETERS	FLTD	RESULTS	UNITS	L	VQ	FLTD	RESULTS	UNITS	L	VQ	FLTD	RESULTS	UNITS	L	VQ
Semivolatile Organics															
Hexachlorobutadiene		NA				UNFI	10.000	ug/L	D	U		NA			
Hexachlorocyclopentadiene		NA				UNFI	10.000	ug/L	D	U		NA			
Hexachloroethane		NA				UNFI	10.000	ug/L	D	U		NA			
Indeno(1,2,3-cd)pyrene		NA				UNFI	10.000	ug/L	D	U		NA			
Isophorone		NA				UNFI	10.000	ug/L	D	U		NA			
N-Nitroso-di-n-propylamine		NA				UNFI	10.000	ug/L	D	U		NA			
N-Nitrosodiphenylamine		NA				UNFI	10.000	ug/L	D	U		NA			
Naphthalene		NA				UNFI	10.000	ug/L	D	U		NA			
Nitrobenzene		NA				UNFI	10.000	ug/L	D	U		NA			
Pentachlorophenol		NA				UNFI	50.000	ug/L	D	U		NA			
Phenanthrene		NA				UNFI	10.000	ug/L	D	U		NA			
Phenol		NA				UNFI	10.000	ug/L	D	U		NA			
Pyrene		NA				UNFI	10.000	ug/L	D	U		NA			
bis(2-Chloroethoxy)methane		NA				UNKN	10.000	ug/L	D	U		NA			
bis(2-Chloroethyl)ether		NA				UNFI	10.000	ug/L	D	U		NA			
bis(2-Chloroisopropyl) ether		NA				UNFI	10.000	ug/L	D	U		NA			
bis(2-Ethylhexyl) phthalate		NA				UNFI	10.000	ug/L	D	U		NA			
p-Chloroaniline		NA				UNFI	10.000	ug/L	D	U		NA			
General Chemistry															
Nitrate	UNFI	0.260	mg/L	C	-	UNFI	2.470	mg/L	C	J	UNFI	1.780	mg/L	C	-

0318

5174
FB-OU02-4, DRAFT
February 18, 1994

TABLE F-11A
(Continued)

PHASE I - CHEMICAL PARAMETERS

BORING NUMBER		1518				1518				2014			
SAMPLE NUMBER		046963				046964				003064			
SAMPLING DATE		07/17/90				08/21/90				03/28/88			
CHEMICAL PARAMETERS	FLTD	RESULTS	UNITS	L	VQ	FLTD	RESULTS	UNITS	L	VQ	FLTD	RESULTS	UNITS	L	VQ
Inorganics															
Aluminum		NA					NA				FILT	0.755	mg/L	C	-
Antimony		NA					NA				FILT	0.030	mg/L	C	U
Arsenic		NA					NA				UNKN	0.002	mg/L	C	U
Barium		NA					NA				UNKN	0.026	mg/L	C	-
Beryllium		NA					NA				FILT	0.001	mg/L	C	U
Cadmium		NA					NA				UNKN	0.005	mg/L	C	UJ
Calcium		NA					NA				UNKN	81.500	mg/L	C	-
Chromium		NA					NA				UNKN	0.010	mg/L	C	U
Cobalt		NA					NA				FILT	0.020	mg/L	C	U
Copper		NA					NA				UNKN	0.010	mg/L	C	U
Cyanide		NA					NA				FILT	0.020	mg/L	C	NV
Cyanide		NA					NA				UNFI	0.020	mg/L	C	U
Iron		NA					NA				UNKN	1.600	mg/L	C	-
Lead		NA					NA				UNKN	0.002	mg/L	C	U
Magnesium		NA					NA				UNKN	20.000	mg/L	C	-
Manganese		NA					NA				UNKN	0.002	mg/L	C	-
Mercury		NA					NA				UNKN	0.001	mg/L	C	UJ
Molybdenum		NA					NA				FILT	0.010	mg/L	C	U
Nickel		NA					NA				UNKN	0.020	mg/L	C	U
Potassium		NA					NA				UNKN	2.000	mg/L	C	-
Selenium		NA					NA				UNKN	0.010	mg/L	C	U
Silver		NA					NA				UNKN	0.005	mg/L	C	U
Sodium		NA					NA				UNKN	12.100	mg/L	C	U
Thallium		NA					NA				FILT	0.004	mg/L	C	U
Vanadium		NA					NA				FILT	0.010	mg/L	C	U
Zinc		NA					NA				FILT	0.034	mg/L	C	-
Volatile Organics															
1,1,1-Trichloroethane		NA					NA				UNFI	5.000	ug/L	C	U
1,1,2,2-Tetrachloroethane		NA					NA				UNFI	5.000	ug/L	C	U
1,1,2-Trichloroethane		NA					NA				UNFI	5.000	ug/L	C	U
1,1-Dichloroethane		NA					NA				UNFI	5.000	ug/L	C	U
1,1-Dichloroethene		NA					NA				UNFI	5.000	ug/L	C	U
1,2-Dichloroethane		NA					NA				UNFI	5.000	ug/L	C	U
1,2-Dichloroethene		NA					NA				UNFI	5.000	ug/L	C	U
1,2-Dichloropropane		NA					NA				UNFI	5.000	ug/L	C	U
2-Butanone		NA					NA				UNFI	10.000	ug/L	C	U
2-Hexanone		NA					NA				UNFI	10.000	ug/L	C	U
4-Methyl-2-pentanone		NA					NA				UNFI	10.000	ug/L	C	U
Acetone		NA					NA				UNFI	2.000	ug/L	C	J
Benzene		NA					NA				UNFI	5.000	ug/L	C	U

TABLE F-11A
(Continued)

PHASE I - CHEMICAL PARAMETERS

BORING NUMBER		1518				1518				2014			
SAMPLE NUMBER		046963				046964				003064			
SAMPLING DATE		07/17/90				08/21/90				03/28/88			
CHEMICAL PARAMETERS	FLTD	RESULTS	UNITS	L	VQ	FLTD	RESULTS	UNITS	L	VQ	FLTD	RESULTS	UNITS	L	VQ
Volatile Organics															
Bromodichloromethane		NA					NA				UNFI	5.000	ug/L	C	U
Bromoform		NA					NA				UNFI	5.000	ug/L	C	U
Bromomethane		NA					NA				UNFI	10.000	ug/L	C	U
Carbon Tetrachloride		NA					NA				UNFI	5.000	ug/L	C	U
Carbon disulfide		NA					NA				UNFI	5.000	ug/L	C	U
Chlorobenzene		NA					NA				UNFI	5.000	ug/L	C	U
Chloroethane		NA					NA				UNFI	10.000	ug/L	C	U
Chloroform		NA					NA				UNFI	5.000	ug/L	C	U
Chloromethane		NA					NA				UNFI	10.000	ug/L	C	U
Dibromochloromethane		NA					NA				UNFI	5.000	ug/L	C	U
Ethylbenzene		NA					NA				UNFI	5.000	ug/L	C	U
Methylene chloride		NA					NA				UNFI	5.000	ug/L	C	U
Styrene		NA					NA				UNFI	5.000	ug/L	C	U
Tetrachloroethene		NA					NA				UNFI	5.000	ug/L	C	U
Toluene		NA					NA				UNFI	5.000	ug/L	C	U
Trichloroethene		NA					NA				UNFI	5.000	ug/L	C	U
Vinyl Acetate		NA					NA				UNFI	10.000	ug/L	C	U
Vinyl chloride		NA					NA				UNFI	10.000	ug/L	C	U
Xylenes, Total		NA					NA				UNFI	5.000	ug/L	C	U
cis-1,3-Dichloropropene		NA					NA				UNFI	5.000	ug/L	C	U
trans-1,3-Dichloropropene		NA					NA				UNFI	5.000	ug/L	C	U
Semivolatile Organics															
1,2,4-Trichlorobenzene		NA					NA				UNFI	10.000	ug/L	C	U
1,2-Dichlorobenzene		NA					NA				UNFI	10.000	ug/L	C	U
1,3-Dichlorobenzene		NA					NA				UNFI	10.000	ug/L	C	U
1,4-Dichlorobenzene		NA					NA				UNFI	10.000	ug/L	C	U
2,4,5-Trichlorophenol		NA					NA				UNFI	50.000	ug/L	C	U
2,4,6-Trichlorophenol		NA					NA				UNFI	10.000	ug/L	C	U
2,4-Dichlorophenol		NA					NA				UNFI	10.000	ug/L	C	U
2,4-Dimethylphenol		NA					NA				UNFI	10.000	ug/L	C	U
2,4-Dinitrophenol		NA					NA				UNFI	50.000	ug/L	C	U
2,4-Dinitrotoluene		NA					NA				UNFI	10.000	ug/L	C	U
2,6-Dinitrotoluene		NA					NA				UNFI	10.000	ug/L	C	U
2-Chloronaphthalene		NA					NA				UNFI	10.000	ug/L	C	U
2-Chlorophenol		NA					NA				UNFI	10.000	ug/L	C	U
2-Methylnaphthalene		NA					NA				UNFI	10.000	ug/L	C	U
2-Methylphenol		NA					NA				UNFI	10.000	ug/L	C	U
2-Nitroaniline		NA					NA				UNFI	50.000	ug/L	C	U
2-Nitrophenol		NA					NA				UNFI	10.000	ug/L	C	U
3,3'-Dichlorobenzidine		NA					NA				UNFI	20.000	ug/L	C	U

TABLE F-11A
(Continued)

PHASE I - CHEMICAL PARAMETERS

BORING NUMBER		1518				1518				2014			
SAMPLE NUMBER		046963				046964				003064			
SAMPLING DATE		07/17/90				08/21/90				03/28/88			
CHEMICAL PARAMETERS	FLTD	RESULTS	UNITS	L	VQ	FLTD	RESULTS	UNITS	L	VQ	FLTD	RESULTS	UNITS	L	VQ
Semivolatile Organics															
3-Nitroaniline		NA					NA				UNFI	50.000	ug/L	C	U
4,6-Dinitro-2-methylphenol		NA					NA				UNFI	50.000	ug/L	C	U
4-Bromophenyl phenyl ether		NA					NA				UNFI	10.000	ug/L	C	U
4-Chloro-3-methylphenol		NA					NA				UNFI	10.000	ug/L	C	U
4-Chlorophenylphenyl ether		NA					NA				UNFI	10.000	ug/L	C	U
4-Methylphenol		NA					NA				UNFI	10.000	ug/L	C	U
4-Nitroaniline		NA					NA				UNFI	50.000	ug/L	C	U
4-Nitrophenol		NA					NA				UNFI	50.000	ug/L	C	U
Acenaphthene		NA					NA				UNFI	10.000	ug/L	C	U
Acenaphthylene		NA					NA				UNFI	10.000	ug/L	C	U
Anthracene		NA					NA				UNFI	10.000	ug/L	C	U
Benzo(a)anthracene		NA					NA				UNFI	10.000	ug/L	C	U
Benzo(a)pyrene		NA					NA				UNFI	10.000	ug/L	C	U
Benzo(b)fluoranthene		NA					NA				UNFI	10.000	ug/L	C	U
Benzo(g,h,i)perylene		NA					NA				UNFI	10.000	ug/L	C	U
Benzo(k)fluoranthene		NA					NA				UNFI	10.000	ug/L	C	U
Benzoic acid		NA					NA				UNFI	50.000	ug/L	C	U
Benzyl alcohol		NA					NA				UNFI	10.000	ug/L	C	U
Butyl benzyl phthalate		NA					NA				UNFI	10.000	ug/L	C	U
Chrysene		NA					NA				UNFI	10.000	ug/L	C	U
Di-n-butyl phthalate		NA					NA				UNFI	10.000	ug/L	C	U
Di-n-octyl phthalate		NA					NA				UNFI	10.000	ug/L	C	U
Dibenzo(a,h)anthracene		NA					NA				UNFI	10.000	ug/L	C	U
Dibenzofuran		NA					NA				UNFI	10.000	ug/L	C	U
Diethyl phthalate		NA					NA				UNFI	10.000	ug/L	C	U
Dimethyl phthalate		NA					NA				UNFI	10.000	ug/L	C	U
Fluoranthene		NA					NA				UNFI	10.000	ug/L	C	U
Fluorene		NA					NA				UNFI	10.000	ug/L	C	U
Hexachlorobenzene		NA					NA				UNFI	10.000	ug/L	C	U
Hexachlorobutadiene		NA					NA				UNFI	10.000	ug/L	C	U
Hexachlorocyclopentadiene		NA					NA				UNFI	10.000	ug/L	C	U
Hexachloroethane		NA					NA				UNFI	10.000	ug/L	C	U
Indeno(1,2,3-cd)pyrene		NA					NA				UNFI	10.000	ug/L	C	U
Isophorone		NA					NA				UNFI	10.000	ug/L	C	U
N-Nitroso-di-n-propylamine		NA					NA				UNFI	10.000	ug/L	C	U
N-Nitrosodiphenylamine		NA					NA				UNFI	10.000	ug/L	C	U
Naphthalene		NA					NA				UNFI	10.000	ug/L	C	U
Nitrobenzene		NA					NA				UNFI	10.000	ug/L	C	U
Pentachlorophenol		NA					NA				UNFI	50.000	ug/L	C	U
Phenanthrene		NA					NA				UNFI	10.000	ug/L	C	U
Phenol		NA					NA				UNFI	10.000	ug/L	C	U
Pyrene		NA					NA				UNFI	10.000	ug/L	C	U

0321

TABLE F-11A
(Continued)

PHASE I - CHEMICAL PARAMETERS

BORING NUMBER		1518				1518				2014			
SAMPLE NUMBER		046963				046964				003064			
SAMPLING DATE		07/17/90				08/21/90				03/28/88			
CHEMICAL PARAMETERS	FLTD	RESULTS	UNITS	L	VQ	FLTD	RESULTS	UNITS	L	VQ	FLTD	RESULTS	UNITS	L	VQ
Semivolatile Organics															
bis(2-Chloroethoxy)methane		NA					NA				UNFI	10.000	ug/L	C	U
bis(2-Chloroethyl)ether		NA					NA				UNFI	10.000	ug/L	C	U
bis(2-Chloroisopropyl) ether		NA					NA				UNFI	10.000	ug/L	C	U
bis(2-Ethylhexyl) phthalate		NA					NA				UNFI	2.000	ug/L	C	J
p-Chloroaniline		NA					NA				UNFI	10.000	ug/L	C	U
Pesticide Organics/PCBs															
4,4'-DDD		NA					NA				UNFI	0.100	ug/L	C	U
4,4'-DDE		NA					NA				UNFI	0.100	ug/L	C	U
4,4'-DDT		NA					NA				UNFI	0.100	ug/L	C	U
Aldrin		NA					NA				UNFI	0.050	ug/L	C	U
Aroclor-1016		NA					NA				UNFI	0.500	ug/L	C	U
Aroclor-1221		NA					NA				UNFI	0.500	ug/L	C	U
Aroclor-1232		NA					NA				UNFI	0.500	ug/L	C	U
Aroclor-1242		NA					NA				UNFI	0.500	ug/L	C	U
Aroclor-1248		NA					NA				UNFI	0.500	ug/L	C	U
Aroclor-1254		NA					NA				UNFI	1.000	ug/L	C	U
Aroclor-1260		NA					NA				UNFI	1.000	ug/L	C	U
Dieldrin		NA					NA				UNFI	0.100	ug/L	C	U
Endosulfan II		NA					NA				UNFI	0.100	ug/L	C	U
Endosulfan sulfate		NA					NA				UNFI	0.100	ug/L	C	U
Endosulfan-I		NA					NA				UNFI	0.050	ug/L	C	U
Endrin		NA					NA				UNFI	0.100	ug/L	C	U
Endrin ketone		NA					NA				UNKN	0.100	ug/L	C	U
Heptachlor		NA					NA				UNFI	0.050	ug/L	C	U
Heptachlor epoxide		NA					NA				UNFI	0.050	ug/L	C	U
Methoxychlor		NA					NA				UNFI	0.500	ug/L	C	U
Toxaphene		NA					NA				UNFI	1.000	ug/L	C	U
alpha-BHC		NA					NA				UNFI	0.050	ug/L	C	U
alpha-Chlordane		NA					NA				UNFI	0.500	ug/L	C	U
beta-BHC		NA					NA				UNFI	0.050	ug/L	C	U
delta-BHC		NA					NA				UNFI	0.050	ug/L	C	U
gamma-BHC (Lindane)		NA					NA				UNFI	0.050	ug/L	C	U
gamma-Chlordane		NA					NA				UNFI	0.500	ug/L	C	U
General Chemistry															
Ammonia		NA					NA				UNFI	0.100	mg/L	C	U
Chloride		NA					NA				UNFI	27.000	mg/L	C	-
Fluoride		NA					NA				UNFI	0.500	mg/L	C	U
Hexavalent Chromium		NA					NA				UNFI	0.020	mg/L	C	U

0 5174

TABLE F-11A
(Continued)

PHASE I - CHEMICAL PARAMETERS

BORING NUMBER		1518				1518				2014			
SAMPLE NUMBER		046963				046964				003064			
SAMPLING DATE		07/17/90				08/21/90				03/28/88			
CHEMICAL PARAMETERS	FLTD	RESULTS	UNITS	L	VQ	FLTD	RESULTS	UNITS	L	VQ	FLTD	RESULTS	UNITS	L	VQ
General Chemistry															
Nitrate	UNFI	0.890	mg/L	C	J	UNFI	0.990	mg/L	C	-	UNFI	5.000	mg/L	C	U
Phenols		NA					NA				UNFI	0.010	mg/L	C	U
Phosphate		NA					NA				UNFI	0.300	mg/L	C	-
Specific conductivity		NA					NA				UNFI	622.000	umhos	C	-
Sulfate		NA					NA				UNFI	64.000	mg/L	C	-
Total Organic Nitrogen		NA					NA				UNFI	0.300	mg/L	C	U
pH		NA					NA				UNFI	7.740	stand	C	-

TABLE F-11A
(Continued)

PHASE I - CHEMICAL PARAMETERS

BORING NUMBER		2014					2014					2014				
SAMPLE NUMBER		003384					003673					003869				
SAMPLING DATE		07/28/88					11/06/88					01/31/89				
CHEMICAL PARAMETERS	FLTD	RESULTS	UNITS	L	VQ		FLTD	RESULTS	UNITS	L	VQ	FLTD	RESULTS	UNITS	L	VQ
Inorganics																
Arsenic	FILT	0.010	mg/L	C	UJ		FILT	0.002	mg/L	C	UJ	FILT	0.002	mg/L	C	U
Barium	FILT	0.200	mg/L	C	U		FILT	0.020	mg/L	C	-	FILT	0.036	mg/L	C	-
Cadmium	FILT	0.005	mg/L	C	U		FILT	0.006	mg/L	C	-	FILT	0.002	mg/L	C	U
Calcium	FILT	84.000	mg/L	C	J		FILT	96.500	mg/L	C	-	FILT	90.000	mg/L	C	-
Chromium	FILT	0.010	mg/L	C	U		FILT	0.020	mg/L	C	U	FILT	0.025	mg/L	C	-
Copper	FILT	0.025	mg/L	C	U		FILT	0.010	mg/L	C	U	FILT	0.018	mg/L	C	-
Iron	FILT	0.100	mg/L	C	U		FILT	0.300	mg/L	C	-	FILT	0.077	mg/L	C	U
Lead	FILT	0.200	mg/L	C	U		FILT	0.033	mg/L	C	R	FILT	0.002	mg/L	C	U
Magnesium	FILT	21.000	mg/L	C	-		FILT	21.000	mg/L	C	-	FILT	23.600	mg/L	C	-
Manganese	FILT	0.015	mg/L	C	U		FILT	0.005	mg/L	C	-	FILT	0.013	mg/L	C	-
Mercury	FILT	0.001	mg/L	C	U		FILT	0.000	mg/L	C	U	FILT	0.000	mg/L	C	-
Molybdenum	FILT	0.050	mg/L	C	U		FILT	0.020	mg/L	C	U	FILT	0.020	mg/L	C	U
Nickel	FILT	0.040	mg/L	C	U		FILT	0.020	mg/L	C	U	FILT	0.020	mg/L	C	U
Potassium	FILT	5.000	mg/L	C	U		FILT	2.440	mg/L	C	-	FILT	2.400	mg/L	C	-
Selenium	FILT	0.005	mg/L	C	U		FILT	0.002	mg/L	C	UJ	FILT	0.003	mg/L	C	-
Silver	FILT	0.010	mg/L	C	UJ		FILT	0.010	mg/L	C	U	FILT	0.001	mg/L	C	U
Sodium	FILT	14.000	mg/L	C	-		FILT	11.100	mg/L	C	-	FILT	13.100	mg/L	C	-
General Chemistry																
Ammonia	UNFI	0.100	mg/L	C	UJ		UNFI	0.100	mg/L	C	UJ	UNFI	0.145	mg/L	C	-
Chloride	UNFI	24.000	mg/L	C	J		UNFI	21.000	mg/L	C	-		NA			
Chloride		NA						NA				UNKN	29.000	mg/L	C	-
Fluoride	UNFI	0.900	mg/L	C	R		UNFI	0.100	mg/L	C	R	UNFI	0.098	mg/L	C	-
Nitrate	UNFI	1.800	mg/L	C	J		UNFI	0.505	mg/L	C	J	UNFI	3.590	mg/L	C	-
Phenols	UNFI	0.050	mg/L	C	U		UNFI	0.010	mg/L	C	U	UNFI	0.030	mg/L	C	-
Phosphorus	UNFI	0.450	mg/L	C	R		UNFI	0.088	mg/L	C	-		NA			
Sulfate	UNFI	69.000	mg/L	C	R		UNFI	60.800	mg/L	C	-	UNFI	59.200	mg/L	C	-
Total Kjeldahl Nitrogen		NA					UNFI	1.070	mg/L	C	J	UNFI	0.762	mg/L	C	-
Total Organic Halides		NA					UNFI	1.700	mg/L	C	-	UNFI	0.174	mg/L	C	R
Total Organic Nitrogen	UNFI	0.100	mg/L	C	UJ		UNFI	1.070	mg/L	C	J	UNFI	0.617	mg/L	C	-

0824

5174

TABLE F-11A
(Continued)

PHASE I - CHEMICAL PARAMETERS

BORING NUMBER		2014				2014				2014			
SAMPLE NUMBER		004028				004151				004211			
SAMPLING DATE		01/31/89				07/26/89				04/01/90			
CHEMICAL PARAMETERS	FLTD	RESULTS	UNITS	L	VQ	FLTD	RESULTS	UNITS	L	VQ	FLTD	RESULTS	UNITS	L	VQ
Inorganics															
Aluminum		NA				FILT	0.243	mg/L	C	-	FILT	0.164	mg/L	C	-
Arsenic		NA				FILT	0.002	mg/L	C	UJ	FILT	0.002	mg/L	C	UJ
Barium		NA				FILT	0.046	mg/L	C	-	FILT	0.041	mg/L	C	-
Cadmium		NA				FILT	0.004	mg/L	C	-	FILT	0.005	mg/L	C	-
Calcium		NA				FILT	96.500	mg/L	C	-	FILT	88.300	mg/L	C	-
Chromium		NA				FILT	0.032	mg/L	C	-	FILT	0.030	mg/L	C	-
Copper		NA				FILT	0.010	mg/L	C	U	FILT	0.010	mg/L	C	U
Iron		NA				FILT	0.436	mg/L	C	-	FILT	0.136	mg/L	C	U
Lead		NA				FILT	0.006	mg/L	C	-	FILT	0.005	mg/L	C	U
Magnesium		NA				FILT	22.600	mg/L	C	-	FILT	21.800	mg/L	C	-
Manganese		NA				FILT	0.380	mg/L	C	-	FILT	0.019	mg/L	C	-
Mercury		NA				FILT	0.000	mg/L	C	U	FILT	0.000	mg/L	C	U
Molybdenum		NA				FILT	0.010	mg/L	C	U	FILT	0.049	mg/L	C	J
Nickel		NA				FILT	0.084	mg/L	C	-	FILT	0.020	mg/L	C	U
Potassium		NA				FILT	2.170	mg/L	C	-	FILT	3.580	mg/L	C	R
Selenium		NA				FILT	0.002	mg/L	C	U	FILT	0.002	mg/L	C	U
Silicon		NA				FILT	3.820	mg/L	C	-	FILT	3.120	mg/L	C	-
Silver		NA				FILT	0.010	mg/L	C	U	FILT	0.010	mg/L	C	U
Sodium		NA				FILT	11.400	mg/L	C	-	FILT	12.200	mg/L	C	-
Vanadium		NA				FILT	0.014	mg/L	C	-	FILT	0.016	mg/L	C	-
Semivolatile Organics															
Methyl parathion	UNFI	0.250	ug/L	C	U		NA					NA			
Parathion	UNFI	0.250	ug/L	C	U		NA					NA			
Pesticide Organics/PCBs															
Azinphosmethyl	UNFI	2.500	ug/L	C	U		NA					NA			
Demeton	UNFI	0.250	ug/L	C	U		NA					NA			
Diazinon	UNFI	0.250	ug/L	C	U		NA					NA			
Disulfoton	UNFI	0.250	ug/L	C	U		NA					NA			
Ethion	UNFI	0.250	ug/L	C	U		NA					NA			
Malathion	UNFI	0.250	ug/L	C	U		NA					NA			
General Chemistry															
Ammonia		NA				UNFI	0.100	mg/L	C	U	UNFI	0.100	mg/L	C	U
Chloride		NA				UNFI	22.500	mg/L	C	-	UNFI	12.200	mg/L	C	-
Fluoride		NA				UNFI	0.320	mg/L	C	-	UNFI	0.280	mg/L	C	-
Nitrate		NA				UNFI	1.720	mg/L	C	J	UNFI	1.820	mg/L	C	J
Phenols		NA				UNFI	0.010	mg/L	C	U	UNFI	0.012	mg/L	C	-

TABLE F-11A
(Continued)

PHASE I - CHEMICAL PARAMETERS

BORING NUMBER		2014				2014				2014			
SAMPLE NUMBER		004028				004151				004211			
SAMPLING DATE		01/31/89				07/26/89				04/01/90			
CHEMICAL PARAMETERS	FLTD	RESULTS	UNITS	L	VQ	FLTD	RESULTS	UNITS	L	VQ	FLTD	RESULTS	UNITS	L	VQ
General Chemistry															
Phosphorus		NA				UNFI	0.196	mg/L	C	-	UNFI	0.350	mg/L	C	-
Sulfate		NA				UNFI	49.300	mg/L	C	-	UNFI	71.600	mg/L	C	-
Sulfide		NA				UNFI	3.520	mg/L	C	J	UNFI	0.500	mg/L	C	U
Total Kjeldahl Nitrogen		NA				UNFI	0.100	mg/L	C	U		NA			
Total Organic Carbon		NA				UNFI	3.720	mg/L	C	-	UNFI	4.070	mg/L	C	J
Total Organic Halides		NA				UNFI	0.060	mg/L	C	J	UNFI	0.973	mg/L	C	R
Total Organic Nitrogen		NA				UNFI	0.459	mg/L	C	-	UNFI	0.120	mg/L	C	-

0826

TABLE F-11A
(Continued)

PHASE I - CHEMICAL PARAMETERS

BORING NUMBER		2046				2046				2046			
SAMPLE NUMBER		003997				004097				004159			
SAMPLING DATE		02/02/89				05/10/89				07/28/89			
CHEMICAL PARAMETERS	FLTD	RESULTS	UNITS	L	VQ	FLTD	RESULTS	UNITS	L	VQ	FLTD	RESULTS	UNITS	L	VQ
Inorganics															
Aluminum		NA				FILT	0.072	mg/L	C	-	FILT	0.124	mg/L	C	-
Arsenic	FILT	0.002	mg/L	C	U	FILT	0.002	mg/L	C	U	FILT	0.002	mg/L	C	UJ
Barium	FILT	0.067	mg/L	C	-	FILT	0.089	mg/L	C	-	FILT	0.059	mg/L	C	-
Cadmium	FILT	0.006	mg/L	C	-	FILT	0.002	mg/L	C	-	FILT	0.006	mg/L	C	-
Calcium	FILT	112.000	mg/L	C	-	FILT	143.000	mg/L	C	-	FILT	104.000	mg/L	C	-
Chromium	FILT	0.023	mg/L	C	-	FILT	0.010	mg/L	C	U	FILT	0.034	mg/L	C	-
Copper	FILT	0.021	mg/L	C	-	FILT	0.010	mg/L	C	U	FILT	0.010	mg/L	C	U
Iron	FILT	0.117	mg/L	C	-	FILT	0.056	mg/L	C	-	FILT	0.040	mg/L	C	-
Lead	FILT	0.006	mg/L	C	-	FILT	0.004	mg/L	C	-	FILT	0.009	mg/L	C	-
Magnesium	FILT	31.700	mg/L	C	-	FILT	38.700	mg/L	C	-	FILT	25.900	mg/L	C	-
Manganese	FILT	0.017	mg/L	C	-	FILT	0.002	mg/L	C	U	FILT	0.010	mg/L	C	-
Mercury	FILT	0.000	mg/L	C	UJ	FILT	0.000	mg/L	C	U	FILT	0.000	mg/L	C	U
Molybdenum	FILT	0.020	mg/L	C	UJ	FILT	0.100	mg/L	C	U	FILT	0.010	mg/L	C	U
Nickel	FILT	0.020	mg/L	C	-	FILT	0.020	mg/L	C	U	FILT	0.020	mg/L	C	U
Potassium	FILT	2.860	mg/L	C	-	FILT	3.230	mg/L	C	-	FILT	2.590	mg/L	C	-
Selenium	FILT	0.003	mg/L	C	-	FILT	0.002	mg/L	C	U	FILT	0.002	mg/L	C	U
Silicon		NA				FILT	5.590	mg/L	C	-	FILT	4.100	mg/L	C	-
Silver	FILT	0.001	mg/L	C	U	FILT	0.010	mg/L	C	U	FILT	0.010	mg/L	C	-
Sodium	FILT	10.200	mg/L	C	-	FILT	10.300	mg/L	C	-	FILT	11.300	mg/L	C	-
Vanadium		NA				FILT	0.010	mg/L	C	U	FILT	0.016	mg/L	C	-
General Chemistry															
Ammonia	UNFI	0.100	mg/L	C	UJ	UNFI	0.100	mg/L	C	U	UNFI	0.100	mg/L	C	U
Chloride	UNFI	3.000	mg/L	C	J	UNFI	18.000	mg/L	C	-	UNFI	25.000	mg/L	C	-
Fluoride	UNFI	0.150	mg/L	C	J	UNFI	0.115	mg/L	C	-	UNFI	0.180	mg/L	C	-
Nitrate	UNFI	1.350	mg/L	C	R	UNFI	1.470	mg/L	C	J	UNFI	2.410	mg/L	C	J
Phenols	UNFI	0.010	mg/L	C	-	UNFI	0.015	mg/L	C	-	UNFI	0.010	mg/L	C	U
Phosphorus	UNFI	0.390	mg/L	C	-	UNFI	0.801	mg/L	C	-	UNFI	0.392	mg/L	C	-
Sulfate	UNFI	73.500	mg/L	C	J	UNFI	84.300	mg/L	C	-	UNFI	59.500	mg/L	C	-
Sulfide		NA				UNFI	30.100	mg/L	C	-	UNFI	0.500	mg/L	C	UJ
Total Kjeldahl Nitrogen	UNFI	0.275	mg/L	C	J	UNFI	0.377	mg/L	C	-	UNFI	0.516	mg/L	C	-
Total Organic Carbon		NA				UNFI	1.000	mg/L	C	U	UNFI	2.830	mg/L	C	-
Total Organic Halides	UNFI	0.010	mg/L	C	U		NA				UNFI	0.010	mg/L	C	U
Total Organic Halides		NA				UNKN	0.021	mg/L	C	-		NA			
Total Organic Nitrogen	UNFI	0.275	mg/L	C	J	UNFI	0.377	mg/L	C	-	UNFI	0.516	mg/L	C	-

TABLE F-11A
(Continued)

PHASE I - CHEMICAL PARAMETERS

BORING NUMBER	2046					2048					2048				
SAMPLE NUMBER	004219					003994					004100				
SAMPLING DATE	04/03/90					02/09/89					05/02/89				
CHEMICAL PARAMETERS	FLTD	RESULTS	UNITS	L	VQ	FLTD	RESULTS	UNITS	L	VQ	FLTD	RESULTS	UNITS	L	VQ
Inorganics															
Aluminum	FILT	0.185	mg/L	C	-		NA				FILT	0.122	mg/L	C	-
Arsenic	FILT	0.002	mg/L	C	UJ	FILT	0.002	mg/L	C	U	FILT	0.002	mg/L	C	U
Barium	FILT	0.069	mg/L	C	-	FILT	0.042	mg/L	C	-	FILT	0.039	mg/L	C	-
Cadmium	FILT	0.007	mg/L	C	-	FILT	0.008	mg/L	C	U	FILT	0.003	mg/L	C	-
Calcium	FILT	120.000	mg/L	C	-	FILT	97.000	mg/L	C	-	FILT	102.000	mg/L	C	-
Chromium	FILT	0.041	mg/L	C	-	FILT	0.031	mg/L	C	-	FILT	0.014	mg/L	C	-
Copper	FILT	0.010	mg/L	C	U	FILT	0.017	mg/L	C	-	FILT	0.010	mg/L	C	-
Iron	FILT	0.096	mg/L	C	U	FILT	0.115	mg/L	C	-	FILT	0.067	mg/L	C	-
Lead	FILT	0.003	mg/L	C	U	FILT	0.002	mg/L	C	UJ	FILT	0.003	mg/L	C	J
Magnesium	FILT	34.300	mg/L	C	-	FILT	24.600	mg/L	C	-	FILT	29.100	mg/L	C	-
Manganese	FILT	0.010	mg/L	C	-	FILT	0.013	mg/L	C	-	FILT	0.014	mg/L	C	-
Mercury	FILT	0.000	mg/L	C	U	FILT	0.000	mg/L	C	J	FILT	0.200	mg/L	C	UJ
Molybdenum	FILT	0.010	mg/L	C	UJ	FILT	0.008	mg/L	C	-	FILT	0.010	mg/L	C	U
Nickel	FILT	0.020	mg/L	C	U	FILT	0.020	mg/L	C	-	FILT	0.020	mg/L	C	U
Potassium	FILT	3.510	mg/L	C	J	FILT	2.030	mg/L	C	-	FILT	1.820	mg/L	C	-
Selenium	FILT	0.002	mg/L	C	U	FILT	0.002	mg/L	C	U	FILT	0.002	mg/L	C	UJ
Silicon	FILT	4.910	mg/L	C	-		NA				FILT	4.530	mg/L	C	-
Silver	FILT	0.015	mg/L	C	-	FILT	0.001	mg/L	C	UJ	FILT	0.001	mg/L	C	U
Sodium	FILT	11.000	mg/L	C	-	FILT	8.030	mg/L	C	-	FILT	6.650	mg/L	C	-
Vanadium	FILT	0.024	mg/L	C	-		NA				FILT	0.011	mg/L	C	-
General Chemistry															
Ammonia	UNFI	0.100	mg/L	C	U	UNFI	0.100	mg/L	C	UJ	UNFI	0.100	mg/L	C	U
Chloride	UNFI	8.890	mg/L	C	-	UNFI	1.000	mg/L	C	U	UNFI	17.300	mg/L	C	-
Fluoride	UNFI	0.180	mg/L	C	-	UNFI	0.120	mg/L	C	-	UNFI	0.100	mg/L	C	-
Nitrate	UNFI	1.600	mg/L	C	R	UNFI	1.830	mg/L	C	J	UNFI	1.190	mg/L	C	J
Phenols	UNFI	0.010	mg/L	C	U	UNFI	0.010	mg/L	C	UJ	UNFI	0.019	mg/L	C	-
Phosphorus	UNFI	0.080	mg/L	C	-	UNFI	0.960	mg/L	C	J	UNFI	1.291	mg/L	C	-
Sulfate	UNFI	86.400	mg/L	C	-	UNFI	59.000	mg/L	C	-	UNFI	56.500	mg/L	C	J
Sulfide	UNFI	0.500	mg/L	C	U		NA				UNFI	37.800	mg/L	C	J
Total Kjeldahl Nitrogen		NA				UNFI	0.441	mg/L	C	J	UNFI	0.725	mg/L	C	-
Total Organic Carbon	UNFI	0.234	mg/L	C	U		NA				UNFI	1.000	mg/L	C	UJ
Total Organic Halides	UNFI	0.032	mg/L	C	R	UNFI	0.010	mg/L	C	UJ	UNFI	0.010	mg/L	C	U
Total Organic Nitrogen	UNFI	0.100	mg/L	C	U	UNFI	0.441	mg/L	C	J	UNFI	0.725	mg/L	C	-

0828

0 5174

TABLE F-11A
(Continued)

PHASE I - CHEMICAL PARAMETERS

BORING NUMBER		2065					2065					2065				
SAMPLE NUMBER		003095					003438					003544				
SAMPLING DATE		04/19/88					08/04/88					02/02/89				
CHEMICAL PARAMETERS	FLTD	RESULTS	UNITS	L	VQ		FLTD	RESULTS	UNITS	L	VQ	FLTD	RESULTS	UNITS	L	VQ
Inorganics																
Aluminum	FILT	0.050	mg/L	D	U			NA					NA			
Antimony	FILT	0.001	mg/L	D	U			NA					NA			
Arsenic		NA					*F	0.010	mg/L	C	U		NA			
Arsenic	FILT	0.002	mg/L	D	U			NA					NA			
Barium		NA					*F	0.200	mg/L	C	U		NA			
Barium	FILT	0.044	mg/L	D	R			NA					NA			
Beryllium	FILT	0.001	mg/L	D	U			NA					NA			
Cadmium		NA					*F	0.005	mg/L	C	U		NA			
Cadmium	FILT	0.002	mg/L	D	U			NA					NA			
Calcium		NA					*F	160.000	mg/L	C	-		NA			
Calcium	FILT	135.000	mg/L	D	-			NA					NA			
Chromium		NA					*F	0.010	mg/L	C	U		NA			
Chromium	FILT	0.020	mg/L	D	R			NA					NA			
Cobalt	FILT	0.010	mg/L	D	U			NA					NA			
Copper		NA					*F	0.030	mg/L	C	U		NA			
Copper	FILT	0.010	mg/L	D	R			NA					NA			
Cyanide	UNKN	0.010	mg/L	D	U			NA					NA			
Iron		NA					*F	0.600	mg/L	C	-		NA			
Iron	FILT	0.090	mg/L	D	U			NA					NA			
Lead		NA					*F	0.005	mg/L	C	U		NA			
Lead	FILT	0.002	mg/L	D	UJ			NA					NA			
Magnesium		NA					*F	46.000	mg/L	C	-		NA			
Magnesium	FILT	42.800	mg/L	D	-			NA					NA			
Manganese		NA					*F	0.510	mg/L	C	-		NA			
Manganese	FILT	0.362	mg/L	D	-			NA					NA			
Mercury		NA					*F	0.000	mg/L	C	U		NA			
Mercury	FILT	0.000	mg/L	D	UJ			NA					NA			
Molybdenum		NA					*F	0.050	mg/L	C	U		NA			
Molybdenum	FILT	0.020	mg/L	D	UJ			NA					NA			
Nickel		NA					*F	0.040	mg/L	C	U		NA			
Nickel	FILT	0.020	mg/L	D	U			NA					NA			
Potassium		NA					*F	5.000	mg/L	C	U		NA			
Potassium	FILT	4.070	mg/L	D	-			NA					NA			
Selenium		NA					*F	0.005	mg/L	C	U		NA			
Selenium	FILT	0.002	mg/L	D	UJ			NA					NA			
Silver		NA					*F	0.010	mg/L	C	U		NA			
Silver	FILT	0.005	mg/L	D	UJ			NA					NA			
Sodium		NA					*F	13.000	mg/L	C	-		NA			
Sodium	FILT	13.800	mg/L	D	-			NA					NA			
Thallium	FILT	0.001	mg/L	D	UJ			NA					NA			
Vanadium	FILT	0.017	mg/L	D	U			NA					NA			
Zinc	FILT	0.010	mg/L	D	U			NA					NA			

TABLE F-11A
(Continued)

PHASE I - CHEMICAL PARAMETERS

BORING NUMBER		2065				2065				2065			
SAMPLE NUMBER		003095				003438				003544			
SAMPLING DATE		04/19/88				08/04/88				02/02/89			
CHEMICAL PARAMETERS	FLTD	RESULTS	UNITS	L	VQ	FLTD	RESULTS	UNITS	L VQ	FLTD	RESULTS	UNITS	L VQ
Volatile Organics													
1,1,1-Trichloroethane	UNFI	5.000	ug/L	D	U		NA				NA		
1,1,2,2-Tetrachloroethane	UNFI	5.000	ug/L	D	U		NA				NA		
1,1,2-Trichloroethane	UNFI	5.000	ug/L	D	U		NA				NA		
1,1-Dichloroethane	UNFI	5.000	ug/L	D	U		NA				NA		
1,1-Dichloroethene	UNFI	5.000	ug/L	D	U		NA				NA		
1,2-Dichloroethane	UNFI	5.000	ug/L	D	U		NA				NA		
1,2-Dichloroethene	UNFI	5.000	ug/L	D	U		NA				NA		
1,2-Dichloropropane	UNFI	5.000	ug/L	D	U		NA				NA		
2-Butanone	UNFI	10.000	ug/L	D	R		NA				NA		
2-Hexanone	UNFI	10.000	ug/L	D	UJ		NA				NA		
4-Methyl-2-pentanone	UNFI	10.000	ug/L	D	UJ		NA				NA		
Acetone	UNFI	5.000	ug/L	D	U		NA				NA		
Benzene	UNFI	5.000	ug/L	D	UJ		NA				NA		
Bromodichloromethane	UNFI	5.000	ug/L	D	U		NA				NA		
Bromoform	UNFI	5.000	ug/L	D	U		NA				NA		
Bromomethane	UNFI	10.000	ug/L	D	U		NA				NA		
Carbon Tetrachloride	UNFI	5.000	ug/L	D	U		NA				NA		
Carbon disulfide	UNFI	5.000	ug/L	D	U		NA				NA		
Chlorobenzene	UNFI	5.000	ug/L	D	UJ		NA				NA		
Chloroethane	UNFI	10.000	ug/L	D	UJ		NA				NA		
Chloroform	UNFI	5.000	ug/L	D	U		NA				NA		
Chloromethane	UNFI	10.000	ug/L	D	U		NA				NA		
Dibromochloromethane	UNFI	5.000	ug/L	D	U		NA				NA		
Ethylbenzene	UNFI	5.000	ug/L	D	UJ		NA				NA		
Methylene chloride	UNFI	5.000	ug/L	D	U		NA				NA		
Styrene	UNFI	5.000	ug/L	D	UJ		NA				NA		
Tetrachloroethene	UNFI	5.000	ug/L	D	U		NA				NA		
Toluene	UNFI	5.000	ug/L	D	UJ		NA				NA		
Trichloroethene	UNFI	5.000	ug/L	D	U		NA				NA		
Vinyl Acetate	UNFI	10.000	ug/L	D	U		NA				NA		
Vinyl chloride	UNFI	10.000	ug/L	D	U		NA				NA		
Xylenes, Total	UNFI	5.000	ug/L	D	UJ		NA				NA		
cis-1,3-Dichloropropene	UNFI	5.000	ug/L	D	U		NA				NA		
trans-1,3-Dichloropropene	UNFI	5.000	ug/L	D	U		NA				NA		
Semivolatile Organics													
1,2,4-Trichlorobenzene	UNFI	10.000	ug/L	D	U		NA				NA		
1,2-Dichlorobenzene	UNFI	10.000	ug/L	D	U		NA				NA		
1,3-Dichlorobenzene	UNFI	10.000	ug/L	D	U		NA				NA		
1,4-Dichlorobenzene	UNFI	10.000	ug/L	D	U		NA				NA		
2,4,5-Trichlorophenol	UNFI	50.000	ug/L	D	U		NA				NA		

TABLE F-11A
(Continued)

PHASE I - CHEMICAL PARAMETERS

BORING NUMBER		2065				2065				2065			
SAMPLE NUMBER		003095				003438				003544			
SAMPLING DATE		04/19/88				08/04/88				02/02/89			
CHEMICAL PARAMETERS	FLTD	RESULTS	UNITS	L	VQ	FLTD	RESULTS	UNITS	L	VQ	FLTD	RESULTS	UNITS	L	VQ
Semivolatile Organics															
2,4,6-Trichlorophenol	UNFI	10.000	ug/L	D	U		NA					NA			
2,4-Dichlorophenol	UNFI	10.000	ug/L	D	U		NA					NA			
2,4-Dimethylphenol	UNFI	10.000	ug/L	D	U		NA					NA			
2,4-Dinitrophenol	UNFI	50.000	ug/L	D	UJ		NA					NA			
2,4-Dinitrotoluene	UNFI	10.000	ug/L	D	U		NA					NA			
2,6-Dinitrotoluene	UNFI	10.000	ug/L	D	U		NA					NA			
2-Chloronaphthalene	UNFI	10.000	ug/L	D	U		NA					NA			
2-Chlorophenol	UNFI	10.000	ug/L	D	U		NA					NA			
2-Methylnaphthalene	UNFI	10.000	ug/L	D	U		NA					NA			
2-Methylphenol	UNFI	10.000	ug/L	D	U		NA					NA			
2-Nitroaniline	UNFI	50.000	ug/L	D	U		NA					NA			
2-Nitrophenol	UNFI	10.000	ug/L	D	U		NA					NA			
3,3'-Dichlorobenzidine	UNFI	20.000	ug/L	D	U		NA					NA			
3-Nitroaniline	UNFI	50.000	ug/L	D	UJ		NA					NA			
4,6-Dinitro-2-methylphenol	UNFI	50.000	ug/L	D	U		NA					NA			
4-Bromophenyl phenyl ether	UNFI	10.000	ug/L	D	U		NA					NA			
4-Chloro-3-methylphenol	UNFI	10.000	ug/L	D	U		NA					NA			
4-Chlorophenylphenyl ether	UNFI	10.000	ug/L	D	U		NA					NA			
4-Methylphenol	UNFI	10.000	ug/L	D	U		NA					NA			
4-Nitroaniline	UNFI	50.000	ug/L	D	UJ		NA					NA			
4-Nitrophenol	UNFI	50.000	ug/L	D	U		NA					NA			
Acenaphthene	UNFI	10.000	ug/L	D	U		NA					NA			
Acenaphthylene	UNFI	10.000	ug/L	D	U		NA					NA			
Anthracene	UNFI	10.000	ug/L	D	U		NA					NA			
Benzo(a)anthracene	UNFI	10.000	ug/L	D	U		NA					NA			
Benzo(a)pyrene	UNFI	10.000	ug/L	D	U		NA					NA			
Benzo(b)fluoranthene	UNFI	10.000	ug/L	D	U		NA					NA			
Benzo(g,h,i)perylene	UNFI	10.000	ug/L	D	U		NA					NA			
Benzo(k)fluoranthene	UNFI	10.000	ug/L	D	U		NA					NA			
Benzoic acid	UNFI	50.000	ug/L	D	U		NA					NA			
Benzyl alcohol	UNFI	10.000	ug/L	D	U		NA					NA			
Butyl benzyl phthalate	UNFI	10.000	ug/L	D	U		NA					NA			
Chrysene	UNFI	10.000	ug/L	D	U		NA					NA			
Di-n-butyl phthalate	UNFI	10.000	ug/L	D	U		NA					NA			
Di-n-octyl phthalate	UNFI	10.000	ug/L	D	U		NA					NA			
Dibenzo(a,h)anthracene	UNFI	10.000	ug/L	D	U		NA					NA			
Dibenzofuran	UNFI	10.000	ug/L	D	U		NA					NA			
Diethyl phthalate	UNFI	20.000	ug/L	D	-		NA					NA			
Dimethyl phthalate	UNFI	10.000	ug/L	D	U		NA					NA			
Fluoranthene	UNFI	10.000	ug/L	D	U		NA					NA			
Fluorene	UNFI	10.000	ug/L	D	U		NA					NA			
Hexachlorobenzene	UNFI	10.000	ug/L	D	U		NA					NA			

TABLE F-11A
(Continued)

PHASE I - CHEMICAL PARAMETERS

BORING NUMBER		2065					2065					2065				
SAMPLE NUMBER		003095					003438					003544				
SAMPLING DATE		04/19/88					08/04/88					02/02/89				
CHEMICAL PARAMETERS	FLTD	RESULTS	UNITS	L	VQ		FLTD	RESULTS	UNITS	L	VQ	FLTD	RESULTS	UNITS	L	VQ
Semivolatile Organics																
Hexachlorobutadiene	UNFI	10.000	ug/L	D	U			NA					NA			
Hexachlorocyclopentadiene	UNFI	10.000	ug/L	D	U			NA					NA			
Hexachloroethane	UNFI	10.000	ug/L	D	U			NA					NA			
Indeno(1,2,3-cd)pyrene	UNFI	10.000	ug/L	D	U			NA					NA			
Isophorone	UNFI	10.000	ug/L	D	U			NA					NA			
Methyl parathion		NA						NA				UNFI	0.250	ug/L	C	UJ
N-Nitroso-di-n-propylamine	UNFI	10.000	ug/L	D	U			NA					NA			
N-Nitrosodiphenylamine	UNFI	10.000	ug/L	D	U			NA					NA			
Naphthalene	UNFI	10.000	ug/L	D	U			NA					NA			
Nitrobenzene	UNFI	10.000	ug/L	D	U			NA					NA			
Parathion		NA						NA				UNFI	0.250	ug/L	C	UJ
Pentachlorophenol	UNFI	50.000	ug/L	D	U			NA					NA			
Phenanthrene	UNFI	10.000	ug/L	D	U			NA					NA			
Phenol	UNFI	10.000	ug/L	D	U			NA					NA			
Pyrene	UNFI	10.000	ug/L	D	U			NA					NA			
bis(2-Chloroethoxy)methane	UNFI	10.000	ug/L	D	U			NA					NA			
bis(2-Chloroethyl)ether	UNFI	10.000	ug/L	D	U			NA					NA			
bis(2-Chloroisopropyl) ether	UNFI	10.000	ug/L	D	U			NA					NA			
bis(2-Ethylhexyl) phthalate	UNFI	10.000	ug/L	D	U			NA					NA			
p-Chloroaniline	UNFI	10.000	ug/L	D	UJ			NA					NA			
Pesticide Organics/PCBs																
4,4'-DDD	UNFI	0.100	ug/L	D	U			NA					NA			
4,4'-DDE	UNFI	0.100	ug/L	D	U			NA					NA			
4,4'-DDT	UNFI	0.100	ug/L	D	U			NA					NA			
Aldrin	UNFI	0.050	ug/L	D	U			NA					NA			
Aroclor-1016	UNFI	0.500	ug/L	D	U			NA					NA			
Aroclor-1221	UNFI	0.500	ug/L	D	U			NA					NA			
Aroclor-1232	UNFI	0.500	ug/L	D	U			NA					NA			
Aroclor-1242	UNFI	0.500	ug/L	D	U			NA					NA			
Aroclor-1248	UNFI	0.500	ug/L	D	U			NA					NA			
Aroclor-1254	UNFI	1.000	ug/L	D	U			NA					NA			
Aroclor-1260	UNFI	1.000	ug/L	D	U			NA					NA			
Azinphosmethyl		NA						NA				UNFI	2.500	ug/L	C	UJ
Demeton		NA						NA				UNFI	0.250	ug/L	C	UJ
Diazinon		NA						NA				UNFI	0.250	ug/L	C	UJ
Dieldrin	UNFI	0.050	ug/L	D	U			NA					NA			
Disulfoton		NA						NA				UNFI	0.250	ug/L	C	UJ
Endosulfan II	UNFI	0.100	ug/L	D	U			NA					NA			
Endosulfan sulfate	UNFI	0.100	ug/L	D	U			NA					NA			
Endosulfan-I	UNFI	0.050	ug/L	D	U			NA					NA			

0832

TABLE F-11A
(Continued)

PHASE I - CHEMICAL PARAMETERS

BORING NUMBER		2065				2065				2065			
SAMPLE NUMBER		003095				003438				003544			
SAMPLING DATE		04/19/88				08/04/88				02/02/89			
CHEMICAL PARAMETERS	FLTD	RESULTS	UNITS	L	VQ	FLTD	RESULTS	UNITS	L	VQ	FLTD	RESULTS	UNITS	L	VQ
Pesticide Organics/PCBs															
Endrin	UNFI	0.050	ug/L	D	U		NA					NA			
Endrin ketone	UNFI	0.100	ug/L	D	U		NA					NA			
Ethion		NA					NA				UNFI	0.250	ug/L	C	UJ
Heptachlor	UNFI	0.050	ug/L	D	U		NA					NA			
Heptachlor epoxide	UNFI	0.050	ug/L	D	U		NA					NA			
Malathion		NA					NA				UNFI	0.250	ug/L	C	UJ
Methoxychlor	UNFI	0.500	ug/L	D	U		NA					NA			
Toxaphene	UNFI	1.000	ug/L	D	U		NA					NA			
alpha-BHC	UNFI	0.050	ug/L	D	U		NA					NA			
alpha-Chlordane	UNFI	0.500	ug/L	D	U		NA					NA			
beta-BHC	UNFI	0.050	ug/L	D	U		NA					NA			
delta-BHC	UNFI	0.050	ug/L	D	U		NA					NA			
gamma-BHC (Lindane)	UNFI	0.050	ug/L	D	U		NA					NA			
gamma-Chlordane	UNFI	0.500	ug/L	D	U		NA					NA			
General Chemistry															
Ammonia	UNFI	0.200	mg/L	C	J	UNFI	0.100	mg/L	C	UJ		NA			
Chloride	UNFI	13.200	mg/L	C	J	UNFI	14.000	mg/L	C	-		NA			
Fluoride		NA				UNFI	0.170	mg/L	C	-		NA			
Fluoride	UNKN	0.270	mg/L	C	J		NA					NA			
Nitrate		NA				UNFI	0.100	mg/L	C	-		NA			
Nitrate	UNKN	0.150	mg/L	C	J		NA					NA			
Phenols	UNFI	0.010	mg/L	C	R	UNFI	0.020	mg/L	C	J		NA			
Phosphorus	UNFI	0.050	mg/L	C	R	UNFI	0.050	mg/L	C	U		NA			
Sulfate	UNFI	165.000	mg/L	C	J	UNFI	198.000	mg/L	C	-		NA			
Total Organic Nitrogen	UNFI	0.200	mg/L	C	J	UNFI	0.100	mg/L	C	U		NA			

0333

TABLE F-11A
(Continued)

PHASE I - CHEMICAL PARAMETERS

BORING NUMBER		2065					2065					2065				
SAMPLE NUMBER		003693					003884					004163				
SAMPLING DATE		11/08/88					02/02/89					07/30/89				
CHEMICAL PARAMETERS	FLTD	RESULTS	UNITS	L	VQ		FLTD	RESULTS	UNITS	L	VQ	FLTD	RESULTS	UNITS	L	VQ
Inorganics																
Aluminum		NA						NA				FILT	0.174	mg/L	C	-
Arsenic	FILT	0.002	mg/L	C	U		FILT	0.002	mg/L	C	U	FILT	0.002	mg/L	C	UJ
Barium	FILT	0.060	mg/L	C	-		FILT	0.077	mg/L	C	-	FILT	0.050	mg/L	C	-
Cadmium	FILT	0.002	mg/L	C	U		FILT	0.009	mg/L	C	-	FILT	0.008	mg/L	C	-
Calcium	FILT	140.000	mg/L	C	-		FILT	185.000	mg/L	C	-	FILT	184.000	mg/L	C	-
Chromium	FILT	0.020	mg/L	C	U		FILT	0.037	mg/L	C	-	FILT	0.050	mg/L	C	-
Copper	FILT	0.010	mg/L	C	U		FILT	0.026	mg/L	C	-	FILT	0.013	mg/L	C	-
Iron	FILT	0.900	mg/L	C	-		FILT	1.110	mg/L	C	-	FILT	0.111	mg/L	C	-
Lead	FILT	0.004	mg/L	C	-		FILT	0.002	mg/L	C	U	FILT	0.002	mg/L	C	U
Magnesium	FILT	39.400	mg/L	C	-		FILT	51.300	mg/L	C	-	FILT	54.300	mg/L	C	-
Manganese	FILT	0.450	mg/L	C	-		FILT	0.517	mg/L	C	-	FILT	0.326	mg/L	C	-
Mercury	FILT	0.000	mg/L	C	U		FILT	0.001	mg/L	C	UJ	FILT	0.000	mg/L	C	UJ
Molybdenum	FILT	0.020	mg/L	C	U		FILT	0.020	mg/L	C	U	FILT	0.010	mg/L	C	U
Nickel	FILT	0.020	mg/L	C	U		FILT	0.032	mg/L	C	-	FILT	0.020	mg/L	C	U
Potassium	FILT	2.630	mg/L	C	-		FILT	3.190	mg/L	C	-	FILT	2.850	mg/L	C	-
Selenium	FILT	0.002	mg/L	C	U		FILT	0.006	mg/L	C	J	FILT	0.002	mg/L	C	U
Silicon		NA						NA				FILT	5.350	mg/L	C	-
Silver	FILT	0.100	mg/L	C	U		FILT	0.001	mg/L	C	U	FILT	0.012	mg/L	C	-
Sodium	FILT	12.400	mg/L	C	-		FILT	14.200	mg/L	C	-	FILT	16.100	mg/L	C	-
Vanadium		NA						NA				FILT	0.026	mg/L	C	-
General Chemistry																
Ammonia	UNFI	0.100	mg/L	C	U		UNFI	0.100	mg/L	C	U	UNFI	0.100	mg/L	C	U
Chloride	UNFI	15.500	mg/L	C	-			NA				UNFI	15.000	mg/L	C	-
Fluoride	UNFI	0.100	mg/L	C	U		UNFI	0.110	mg/L	C	-		NA			
Fluoride		NA						NA				UNKN	0.140	mg/L	C	-
Nitrate	UNFI	0.100	mg/L	C	U		UNFI	0.100	mg/L	C	R	UNFI	0.145	mg/L	C	J
Phenols	UNFI	0.010	mg/L	C	U		UNFI	0.010	mg/L	C	R	UNFI	0.010	mg/L	C	U
Phosphorus	UNFI	0.020	mg/L	C	U		UNFI	0.080	mg/L	C	J	UNFI	0.569	mg/L	C	-
Sulfate	UNFI	133.000	mg/L	C	-		UNFI	229.000	mg/L	C	-	UNFI	281.000	mg/L	C	-
Sulfide		NA						NA				UNFI	0.500	mg/L	C	UJ
Total Kjeldahl Nitrogen	UNFI	0.130	mg/L	C	U		UNFI	0.100	mg/L	C	J	UNFI	0.409	mg/L	C	-
Total Organic Carbon		NA						NA				UNFI	3.010	mg/L	C	-
Total Organic Halides	UNFI	0.050	mg/L	C	U		UNFI	0.010	mg/L	C	U	UNFI	0.010	mg/L	C	U
Total Organic Nitrogen	UNFI	0.130	mg/L	C	-		UNFI	0.100	mg/L	C	-	UNFI	0.409	mg/L	C	-

TABLE F-11A
(Continued)

PHASE I - CHEMICAL PARAMETERS

BORING NUMBER		2065				2065				2065			
SAMPLE NUMBER		004225				003538 DUPLICATE				004168 DUPLICATE			
SAMPLING DATE		04/09/90				02/02/89				07/30/89			
CHEMICAL PARAMETERS	FLTD	RESULTS	UNITS	L	VQ	FLTD	RESULTS	UNITS	L	VQ	FLTD	RESULTS	UNITS	L	VQ
Inorganics															
Aluminum	FILT	0.163	mg/L	C	J		NA				FILT	0.178	mg/L	C	-
Arsenic	FILT	0.002	mg/L	C	U	FILT	0.002	mg/L	C	U	FILT	0.002	mg/L	C	UJ
Barium	FILT	0.045	mg/L	C	J	FILT	0.072	mg/L	C	-	FILT	0.048	mg/L	C	-
Cadmium	FILT	0.007	mg/L	C	J	FILT	0.009	mg/L	C	-	FILT	0.008	mg/L	C	-
Calcium	FILT	170.000	mg/L	C	J	FILT	177.000	mg/L	C	-	FILT	183.000	mg/L	C	-
Chromium	FILT	0.052	mg/L	C	J	FILT	0.033	mg/L	C	-	FILT	0.052	mg/L	C	-
Copper	FILT	0.010	mg/L	C	UJ	FILT	0.024	mg/L	C	-	FILT	0.014	mg/L	C	-
Iron	FILT	0.079	mg/L	C	UJ	FILT	1.020	mg/L	C	-	FILT	0.073	mg/L	C	-
Lead	FILT	0.003	mg/L	C	-	FILT	0.002	mg/L	C	-	FILT	0.004	mg/L	C	-
Magnesium	FILT	58.200	mg/L	C	J	FILT	50.100	mg/L	C	-	FILT	54.300	mg/L	C	-
Manganese	FILT	0.168	mg/L	C	J	FILT	0.497	mg/L	C	-	FILT	0.277	mg/L	C	-
Mercury	FILT	0.000	mg/L	C	U	FILT	0.001	mg/L	C	J	FILT	0.000	mg/L	C	UJ
Molybdenum	FILT	0.010	mg/L	C	UJ	FILT	0.020	mg/L	C	U	FILT	0.010	mg/L	C	U
Nickel	FILT	0.020	mg/L	C	UJ	FILT	0.023	mg/L	C	-	FILT	0.020	mg/L	C	U
Potassium	FILT	3.460	mg/L	C	J	FILT	3.250	mg/L	C	-	FILT	2.950	mg/L	C	-
Selenium	FILT	0.002	mg/L	C	U	FILT	0.005	mg/L	C	J	FILT	0.002	mg/L	C	U
Silicon	FILT	5.150	mg/L	C	J		NA				FILT	5.220	mg/L	C	-
Silver	FILT	0.016	mg/L	C	J	FILT	0.001	mg/L	C	U	FILT	0.013	mg/L	C	-
Sodium	FILT	14.900	mg/L	C	J	FILT	14.000	mg/L	C	-	FILT	15.600	mg/L	C	-
Vanadium	FILT	0.031	mg/L	C	J		NA				FILT	0.026	mg/L	C	-
General Chemistry															
Ammonia	UNFI	0.100	mg/L	C	U	UNFI	0.100	mg/L	C	U	UNFI	0.100	mg/L	C	U
Chloride	UNFI	8.510	mg/L	C	-		NA				UNFI	11.900	mg/L	C	-
Fluoride	UNFI	0.110	mg/L	C	J	UNFI	0.110	mg/L	C	-	UNFI	0.140	mg/L	C	-
Nitrate	UNFI	0.170	mg/L	C	J	UNFI	0.100	mg/L	C	R	UNFI	0.174	mg/L	C	J
Phenols	UNFI	0.014	mg/L	C	-	UNFI	0.010	mg/L	C	R	UNFI	0.010	mg/L	C	U
Phosphorus	UNFI	0.670	mg/L	C	-	UNFI	0.060	mg/L	C	J	UNFI	0.563	mg/L	C	-
Sulfate	UNFI	278.000	mg/L	C	J	UNFI	214.000	mg/L	C	-	UNFI	292.000	mg/L	C	-
Sulfide	UNFI	0.500	mg/L	C	UJ		NA				UNFI	0.500	mg/L	C	UJ
Total Kjeldahl Nitrogen		NA				UNFI	1.790	mg/L	C	J	UNFI	0.452	mg/L	C	-
Total Organic Carbon		NA					NA				UNFI	1.470	mg/L	C	-
Total Organic Halides		NA				UNFI	0.010	mg/L	C	U		NA			
Total Organic Halides	UNKN	0.013	mg/L	C	UJ		NA				UNKN	0.010	mg/L	C	U
Total Organic Nitrogen	UNFI	0.100	mg/L	C	U	UNFI	1.790	mg/L	C	-	UNFI	0.452	mg/L	C	-

TABLE F-11A
(Continued)

PHASE I - CHEMICAL PARAMETERS

BORING NUMBER		2385				2385				2401			
SAMPLE NUMBER		004192				004303				038375			
SAMPLING DATE		05/06/90				07/10/90				06/03/92			
CHEMICAL PARAMETERS	FLTD	RESULTS	UNITS	L	VQ	FLTD	RESULTS	UNITS	L	VQ	FLTD	RESULTS	UNITS	L	VQ
Inorganics															
Aluminum	FILT	0.100	mg/L	C	-	FILT	0.070	mg/L	C	-		NA			
Aluminum		NA					NA				UNKN	0.043	mg/L	D	-
Arsenic	FILT	0.002	mg/L	C	U	FILT	0.002	mg/L	C	UJ		NA			
Arsenic		NA					NA				UNKN	0.001	mg/L	D	U
Barium	FILT	0.064	mg/L	C	-	FILT	0.071	mg/L	C	-		NA			
Barium		NA					NA				UNKN	0.056	mg/L	D	-
Cadmium	FILT	0.008	mg/L	C	-	FILT	0.006	mg/L	C	-		NA			
Cadmium		NA					NA				UNKN	0.006	mg/L	D	U
Calcium	FILT	146.000	mg/L	C	-	FILT	136.000	mg/L	C	-		NA			
Calcium		NA					NA				UNKN	116.000	mg/L	D	-
Chromium	FILT	0.041	mg/L	C	-	FILT	0.038	mg/L	C	-		NA			
Chromium		NA					NA				UNKN	0.004	mg/L	D	U
Copper	FILT	0.015	mg/L	C	-	FILT	0.012	mg/L	C	-		NA			
Copper		NA					NA				UNKN	0.008	mg/L	D	UJ
Iron	FILT	0.044	mg/L	C	-	FILT	0.163	mg/L	C	-		NA			
Iron		NA					NA				UNKN	0.011	mg/L	D	U
Lead	FILT	0.002	mg/L	C	U	FILT	0.002	mg/L	C	U		NA			
Lead		NA					NA				UNKN	0.001	mg/L	D	U
Magnesium	FILT	44.200	mg/L	C	-	FILT	40.600	mg/L	C	-		NA			
Magnesium		NA					NA				UNKN	32.900	mg/L	D	-
Manganese	FILT	0.330	mg/L	C	-	FILT	0.198	mg/L	C	-		NA			
Manganese		NA					NA				UNKN	0.003	mg/L	D	-
Mercury	FILT	0.000	mg/L	C	U	FILT	0.000	mg/L	C	U		NA			
Mercury		NA					NA				UNKN	0.000	mg/L	D	U
Molybdenum	FILT	0.014	mg/L	C	-	FILT	0.010	mg/L	C	UJ		NA			
Molybdenum		NA					NA				UNKN	0.011	mg/L	D	U
Nickel	FILT	0.042	mg/L	C	-	FILT	0.023	mg/L	C	-		NA			
Nickel		NA					NA				UNKN	0.044	mg/L	D	U
Potassium	FILT	1.870	mg/L	C	-	FILT	2.860	mg/L	C	-		NA			
Potassium		NA					NA				UNKN	1.960	mg/L	D	-
Selenium	FILT	0.002	mg/L	C	U	FILT	0.002	mg/L	C	U		NA			
Selenium		NA					NA				UNKN	0.001	mg/L	D	U
Silicon	FILT	6.010	mg/L	C	-	FILT	5.610	mg/L	C	-		NA			
Silicon		NA					NA				UNKN	4.280	mg/L	D	J
Silver	FILT	0.026	mg/L	C	-	FILT	0.018	mg/L	C	-		NA			
Silver		NA					NA				UNKN	0.004	mg/L	D	U
Sodium	FILT	12.600	mg/L	C	-	FILT	12.300	mg/L	C	-		NA			
Sodium		NA					NA				UNKN	10.200	mg/L	D	-
Vanadium	FILT	0.022	mg/L	C	-	FILT	0.016	mg/L	C	-		NA			
Vanadium		NA					NA				UNKN	0.007	mg/L	D	U
General Chemistry															
Ammonia	UNFI	0.100	mg/L	C	U	UNFI	0.100	mg/L	C	UJ	UNFI	0.050	mg/L	C	U

TABLE F-11A
(Continued)

PHASE I - CHEMICAL PARAMETERS

BORING NUMBER		2385				2385				2401			
SAMPLE NUMBER		004192				004303				038375			
SAMPLING DATE		05/06/90				07/10/90				06/03/92			
CHEMICAL PARAMETERS	FLTD	RESULTS	UNITS	L	VQ	FLTD	RESULTS	UNITS	L	VQ	FLTD	RESULTS	UNITS	L	VQ
General Chemistry															
Chloride	UNFI	10.700	mg/L	C	-	UNFI	10.400	mg/L	C	-	UNFI	11.000	mg/L	C	-
Fluoride	UNFI	0.240	mg/L	C	-	UNFI	0.050	mg/L	C	UJ	UNFI	0.600	mg/L	C	J
Nitrate	UNFI	1.260	mg/L	C	J	UNFI	0.330	mg/L	C	R	UNFI	1.100	mg/L	C	-
Phenols	UNFI	0.010	mg/L	C	U	UNFI	0.010	mg/L	C	UJ	UNFI	0.010	mg/L	C	U
Phosphorus	UNFI	0.400	mg/L	C	-	UNFI	0.020	mg/L	C	UJ	UNFI	0.080	mg/L	C	-
Sulfate	UNFI	96.800	mg/L	C	-	UNFI	91.700	mg/L	C	-	UNFI	74.000	mg/L	C	-
Sulfide	UNFI	0.500	mg/L	C	U	UNFI	0.500	mg/L	C	UJ	UNFI	0.500	mg/L	C	U
Total Organic Carbon	UNFI	62.000	mg/L	C	-	UNFI	2.890	mg/L	C	-	UNFI	22.000	mg/L	C	-
Total Organic Halides	UNFI	0.010	mg/L	C	UJ	UNFI	0.013	mg/L	C	-	UNFI	0.010	mg/L	C	J
Total Organic Nitrogen	UNFI	0.100	mg/L	C	UJ	UNFI	0.170	mg/L	C	-	UNFI	1.000	mg/L	C	UJ

0837

TABLE F-11A
(Continued)

PHASE I - CHEMICAL PARAMETERS

BORING NUMBER		3014					3014					3014				
SAMPLE NUMBER		003084					003385					003672				
SAMPLING DATE		04/08/88					07/28/88					11/06/88				
CHEMICAL PARAMETERS	FLTD	RESULTS	UNITS	L	VQ		FLTD	RESULTS	UNITS	L	VQ	FLTD	RESULTS	UNITS	L	VQ
Inorganics																
Arsenic		NA					*F	0.010	mg/L	C	UJ		NA			
Arsenic	FILT	0.200	mg/L	C	UJ		NA					FILT	0.002	mg/L	C	UJ
Barium		NA					*F	0.200	mg/L	C	U		NA			
Barium	FILT	0.027	mg/L	C	R		NA					FILT	0.030	mg/L	C	-
Cadmium		NA					*F	0.005	mg/L	C	U		NA			
Cadmium	FILT	0.002	mg/L	C	U		NA					FILT	0.004	mg/L	C	-
Calcium		NA					*F	78.000	mg/L	C	J		NA			
Calcium	FILT	73.400	mg/L	C	-		NA					FILT	74.100	mg/L	C	-
Chromium		NA					*F	0.010	mg/L	C	U		NA			
Chromium	FILT	0.020	mg/L	C	U		NA					FILT	0.020	mg/L	C	U
Copper		NA					*F	0.025	mg/L	C	U		NA			
Copper	FILT	0.010	mg/L	C	U		NA					FILT	0.010	mg/L	C	U
Iron		NA					*F	0.100	mg/L	C	U		NA			
Iron	FILT	0.005	mg/L	C	U		NA					FILT	0.030	mg/L	C	-
Lead		NA					*F	0.200	mg/L	C	U		NA			
Lead	FILT	0.050	mg/L	C	U		NA					FILT	0.016	mg/L	C	R
Magnesium		NA					*F	21.000	mg/L	C	-		NA			
Magnesium	FILT	18.050	mg/L	C	-		NA					FILT	18.700	mg/L	C	-
Manganese		NA					*F	0.015	mg/L	C	U		NA			
Manganese	FILT	0.001	mg/L	C	U		NA					FILT	0.001	mg/L	C	U
Mercury		NA					*F	0.001	mg/L	C	U		NA			
Mercury	FILT	0.000	mg/L	C	U		NA					FILT	0.000	mg/L	C	U
Molybdenum		NA					*F	0.050	mg/L	C	U		NA			
Molybdenum	FILT	0.020	mg/L	C	U		NA					FILT	0.020	mg/L	C	U
Nickel		NA					*F	0.040	mg/L	C	U		NA			
Nickel	FILT	0.020	mg/L	C	U		NA					FILT	0.020	mg/L	C	U
Potassium		NA					*F	5.000	mg/L	C	U		NA			
Potassium	FILT	2.460	mg/L	C	-		NA					FILT	1.940	mg/L	C	-
Selenium		NA					*F	0.005	mg/L	C	U		NA			
Selenium	FILT	0.200	mg/L	C	UJ		NA					FILT	0.002	mg/L	C	J
Silver		NA					*F	0.010	mg/L	C	UJ		NA			
Silver	FILT	0.010	mg/L	C	U		NA					FILT	0.010	mg/L	C	U
Sodium		NA					*F	13.000	mg/L	C	-		NA			
Sodium	FILT	9.660	mg/L	C	-		NA					FILT	10.900	mg/L	C	-
General Chemistry																
Ammonia	UNFI	0.100	mg/L	C	U		UNFI	0.100	mg/L	C	UJ	UNFI	0.100	mg/L	C	UJ
Chloride	UNFI	24.700	mg/L	C	-		UNFI	24.000	mg/L	C	J	UNFI	25.800	mg/L	C	-
Fluoride	UNFI	0.300	mg/L	C	-		UNFI	0.870	mg/L	C	R	UNFI	0.160	mg/L	C	J
Nitrate	UNFI	0.100	mg/L	C	J		UNFI	3.800	mg/L	C	J	UNFI	1.680	mg/L	C	J
Phenols	UNFI	0.010	mg/L	C	U		UNFI	0.050	mg/L	C	U	UNFI	0.010	mg/L	C	U

TABLE F-11A
(Continued)

PHASE I - CHEMICAL PARAMETERS

BORING NUMBER		3014				3014				3014			
SAMPLE NUMBER		003084				003385				003672			
SAMPLING DATE		04/08/88				07/28/88				11/06/88			
CHEMICAL PARAMETERS	FLTD	RESULTS	UNITS	L	VQ	FLTD	RESULTS	UNITS	L	VQ	FLTD	RESULTS	UNITS	L	VQ
General Chemistry															
Phosphorus	UNFI	0.240	mg/L	C	-	UNFI	0.060	mg/L	C	R	UNFI	0.020	mg/L	C	U
Sulfate	UNFI	48.000	mg/L	C	-	UNFI	62.000	mg/L	C	R	UNFI	51.400	mg/L	C	-
Total Kjeldahl Nitrogen		NA					NA				UNFI	0.290	mg/L	C	J
Total Organic Halides		NA					NA				UNFI	1.100	mg/L	C	-
Total Organic Nitrogen	UNFI	0.300	mg/L	C	-	UNFI	0.100	mg/L	C	UJ	UNFI	0.290	mg/L	C	J

0839

TABLE F-11A
(Continued)

PHASE I - CHEMICAL PARAMETERS

BORING NUMBER		3014					3014					3045				
SAMPLE NUMBER		003870					004239					004198				
SAMPLING DATE		01/31/89					04/01/90					05/23/90				
CHEMICAL PARAMETERS	FLTD	RESULTS	UNITS	L	VQ		FLTD	RESULTS	UNITS	L	VQ	FLTD	RESULTS	UNITS	L	VQ
Inorganics																
Aluminum		NA					FILT	0.103	mg/L	C	-	FILT	0.039	mg/L	C	-
Arsenic	FILT	0.002	mg/L	C	U		FILT	0.002	mg/L	C	UJ	FILT	0.002	mg/L	C	U
Barium	FILT	0.037	mg/L	C	-		FILT	0.029	mg/L	C	-	FILT	0.047	mg/L	C	-
Cadmium	FILT	0.002	mg/L	C	U		FILT	0.003	mg/L	C	-	FILT	0.001	mg/L	C	-
Calcium	FILT	87.000	mg/L	C	-		FILT	73.300	mg/L	C	-	FILT	88.900	mg/L	C	-
Chromium	FILT	0.024	mg/L	C	-		FILT	0.025	mg/L	C	-	FILT	0.004	mg/L	C	-
Copper	FILT	0.014	mg/L	C	-		FILT	0.010	mg/L	C	U	FILT	0.007	mg/L	C	U
Iron	FILT	0.068	mg/L	C	U		FILT	0.073	mg/L	C	U	FILT	0.128	mg/L	C	U
Lead	FILT	0.002	mg/L	C	U		FILT	0.002	mg/L	C	U	FILT	0.001	mg/L	C	U
Magnesium	FILT	22.700	mg/L	C	-		FILT	19.300	mg/L	C	-	FILT	22.500	mg/L	C	-
Manganese	FILT	0.004	mg/L	C	-		FILT	0.006	mg/L	C	-	FILT	0.088	mg/L	C	-
Mercury	FILT	0.001	mg/L	C	-		FILT	0.000	mg/L	C	U	FILT	0.000	mg/L	C	U
Molybdenum	FILT	0.020	mg/L	C	U		FILT	0.010	mg/L	C	UJ	FILT	0.007	mg/L	C	-
Nickel	FILT	0.020	mg/L	C	U		FILT	0.020	mg/L	C	U	FILT	0.005	mg/L	C	-
Potassium	FILT	2.470	mg/L	C	-		FILT	2.520	mg/L	C	-	FILT	2.600	mg/L	C	-
Selenium	FILT	0.004	mg/L	C	-		FILT	0.002	mg/L	C	U	FILT	0.003	mg/L	C	U
Silicon		NA					FILT	2.650	mg/L	C	-	FILT	1.900	mg/L	C	-
Silver	FILT	0.001	mg/L	C	U		FILT	0.010	mg/L	C	U	FILT	0.003	mg/L	C	U
Sodium	FILT	12.700	mg/L	C	-		FILT	12.400	mg/L	C	-	FILT	10.200	mg/L	C	-
Vanadium		NA					FILT	0.014	mg/L	C	-	FILT	0.006	mg/L	C	-
General Chemistry																
Ammonia	UNFI	0.108	mg/L	C	-		UNFI	0.100	mg/L	C	U	UNFI	0.200	mg/L	C	-
Chloride	UNFI	23.000	mg/L	C	-		UNFI	9.510	mg/L	C	-	UNFI	21.000	mg/L	C	-
Fluoride	UNFI	0.105	mg/L	C	-		UNFI	0.230	mg/L	C	-	UNFI	0.100	mg/L	C	-
Nitrate	UNFI	2.910	mg/L	C	-		UNFI	3.130	mg/L	C	J	UNFI	0.900	mg/L	C	J
Phenols	UNFI	0.020	mg/L	C	-		UNFI	0.018	mg/L	C	-	UNFI	0.017	mg/L	C	-
Phosphorus		NA					UNFI	0.140	mg/L	C	-		NA			
Sulfate		NA					UNFI	53.600	mg/L	C	-	UNFI	72.000	mg/L	C	-
Sulfate	UNKN	50.700	mg/L	C	-			NA					NA			
Sulfide		NA					UNFI	0.500	mg/L	C	U	UNFI	2.000	mg/L	C	J
Total Kjeldahl Nitrogen	UNFI	0.286	mg/L	C	-			NA					NA			
Total Organic Carbon		NA					UNFI	4.450	mg/L	C	J	UNFI	2.000	mg/L	C	J
Total Organic Halides		NA					UNFI	0.379	mg/L	C	R	UNFI	0.050	mg/L	C	U
Total Organic Halides	UNKN	1.310	mg/L	C	-			NA					NA			
Total Organic Nitrogen	UNFI	0.178	mg/L	C	-		UNFI	0.280	mg/L	C	-	UNFI	0.000	mg/L	C	J

0840

0 5174

TABLE F-11A
(Continued)

PHASE I - CHEMICAL PARAMETERS

BORING NUMBER		3046				3046				3065			
SAMPLE NUMBER		004207				004332				003995			
SAMPLING DATE		06/15/90				08/24/90				01/25/89			
CHEMICAL PARAMETERS	FLTD	RESULTS	UNITS	L	VQ	FLTD	RESULTS	UNITS	L	VQ	FLTD	RESULTS	UNITS	L	VQ
Inorganics															
Aluminum	FILT	0.060	mg/L	C	U	FILT	0.060	mg/L	C	U		NA			
Arsenic	FILT	0.002	mg/L	C	U	FILT	0.002	mg/L	C	U	FILT	0.002	mg/L	C	U
Barium	FILT	0.051	mg/L	C	-	FILT	0.045	mg/L	C	-	FILT	0.051	mg/L	C	-
Cadmium	FILT	0.005	mg/L	C	-	FILT	0.003	mg/L	C	-	FILT	0.004	mg/L	C	-
Calcium	FILT	85.500	mg/L	C	-	FILT	83.800	mg/L	C	-	FILT	83.400	mg/L	C	-
Chromium	FILT	0.042	mg/L	C	-	FILT	0.026	mg/L	C	-	FILT	0.021	mg/L	C	-
Copper	FILT	0.010	mg/L	C	U	FILT	0.010	mg/L	C	U	FILT	0.011	mg/L	C	-
Iron	FILT	0.691	mg/L	C	-	FILT	0.257	mg/L	C	-	FILT	2.800	mg/L	C	U
Lead	FILT	0.002	mg/L	C	U	FILT	0.008	mg/L	C	U	FILT	0.002	mg/L	C	U
Magnesium	FILT	22.900	mg/L	C	-	FILT	21.400	mg/L	C	-	FILT	21.000	mg/L	C	-
Manganese	FILT	0.340	mg/L	C	-	FILT	0.313	mg/L	C	-	FILT	0.223	mg/L	C	-
Mercury	FILT	0.000	mg/L	C	U	FILT	0.000	mg/L	C	U	FILT	0.000	mg/L	C	U
Molybdenum	FILT	0.010	mg/L	C	U	FILT	0.010	mg/L	C	U	FILT	0.020	mg/L	C	U
Nickel	FILT	0.030	mg/L	C	-	FILT	0.020	mg/L	C	U	FILT	0.025	mg/L	C	-
Potassium	FILT	2.680	mg/L	C	-	FILT	2.650	mg/L	C	-	FILT	2.650	mg/L	C	-
Selenium	FILT	0.002	mg/L	C	U	FILT	0.002	mg/L	C	U	FILT	0.002	mg/L	C	U
Silicon	FILT	3.610	mg/L	C	-	FILT	3.340	mg/L	C	-		NA			
Silver	FILT	0.013	mg/L	C	-	FILT	0.012	mg/L	C	-	FILT	0.001	mg/L	C	U
Sodium	FILT	12.300	mg/L	C	-	FILT	11.100	mg/L	C	-	FILT	10.400	mg/L	C	-
Vanadium	FILT	0.010	mg/L	C	U	FILT	0.010	mg/L	C	U		NA			
General Chemistry															
Ammonia	UNFI	0.100	mg/L	C	U	UNFI	0.100	mg/L	C	U	UNFI	0.100	mg/L	C	U
Chloride	UNFI	11.360	mg/L	C	-	UNFI	25.300	mg/L	C	-	UNFI	19.000	mg/L	C	-
Fluoride	UNFI	0.137	mg/L	C	-	UNFI	0.140	mg/L	C	-	UNFI	0.060	mg/L	C	-
Nitrate	UNFI	0.560	mg/L	C	-	UNFI	0.400	mg/L	C	J	UNFI	0.100	mg/L	C	U
Phenols	UNFI	0.010	mg/L	C	UJ	UNFI	0.010	mg/L	C	U	UNFI	0.010	mg/L	C	-
Phosphorus	UNFI	0.140	mg/L	C	-	UNFI	0.020	mg/L	C	U	UNFI	0.670	mg/L	C	-
Sulfate	UNFI	74.200	mg/L	C	-	UNFI	83.600	mg/L	C	-	UNFI	62.500	mg/L	C	-
Sulfide	UNFI	0.720	mg/L	C	-	UNFI	0.500	mg/L	C	UJ		NA			
Total Kjeldahl Nitrogen		NA					NA				UNFI	0.100	mg/L	C	-
Total Organic Carbon	UNFI	2.990	mg/L	C	-	UNFI	2.100	mg/L	C	-		NA			
Total Organic Halides	UNFI	0.011	mg/L	C	-	UNFI	0.019	mg/L	C	J	UNFI	0.010	mg/L	C	U
Total Organic Nitrogen	UNFI	0.120	mg/L	C	-	UNFI	0.140	mg/L	C	-	UNFI	0.100	mg/L	C	-

TABLE F-11A
(Continued)

PHASE I - CHEMICAL PARAMETERS

BORING NUMBER		3065					3065					3385				
SAMPLE NUMBER		004098					004249					004309				
SAMPLING DATE		05/31/89					04/09/90					07/24/90				
CHEMICAL PARAMETERS	FLTD	RESULTS	UNITS	L	VQ		FLTD	RESULTS	UNITS	L	VQ	FLTD	RESULTS	UNITS	L	VQ
Inorganics																
Aluminum		NA						NA				*F	0.067	mg/L	C	-
Aluminum	FILT	0.086	mg/L	C	-		FILT	0.109	mg/L	C	J		NA			
Arsenic		NA						NA				*F	0.002	mg/L	C	UJ
Arsenic	FILT	0.002	mg/L	C	U		FILT	0.002	mg/L	C	U		NA			
Barium		NA						NA				*F	0.057	mg/L	C	-
Barium	FILT	0.056	mg/L	C	-		FILT	0.059	mg/L	C	J		NA			
Cadmium		NA						NA				*F	0.004	mg/L	C	-
Cadmium	FILT	0.005	mg/L	C	-		FILT	0.003	mg/L	C	J		NA			
Calcium		NA						NA				*F	92.700	mg/L	C	-
Calcium	FILT	87.050	mg/L	C	-		FILT	90.600	mg/L	C	J		NA			
Chromium		NA						NA				*F	0.025	mg/L	C	-
Chromium	FILT	0.035	mg/L	C	-		FILT	0.033	mg/L	C	J		NA			
Copper		NA						NA				*F	0.010	mg/L	C	U
Copper	FILT	0.010	mg/L	C	U		FILT	0.010	mg/L	C	UJ		NA			
Iron		NA						NA				*F	2.390	mg/L	C	-
Iron	FILT	1.550	mg/L	C	-		FILT	1.390	mg/L	C	J		NA			
Lead		NA						NA				*F	0.002	mg/L	C	U
Lead	FILT	0.003	mg/L	C	J		FILT	0.003	mg/L	C	-		NA			
Magnesium		NA						NA				*F	24.400	mg/L	C	-
Magnesium	FILT	22.000	mg/L	C	-		FILT	23.000	mg/L	C	J		NA			
Manganese		NA						NA				*F	0.392	mg/L	C	-
Manganese	FILT	0.214	mg/L	C	-		FILT	0.232	mg/L	C	J		NA			
Mercury		NA						NA				*F	0.000	mg/L	C	U
Mercury	FILT	0.000	mg/L	C	U		FILT	0.000	mg/L	C	U		NA			
Molybdenum		NA						NA				*F	0.010	mg/L	C	U
Molybdenum	FILT	0.010	mg/L	C	U		FILT	0.010	mg/L	C	UJ		NA			
Nickel		NA						NA				*F	0.029	mg/L	C	-
Nickel	FILT	0.020	mg/L	C	U		FILT	0.020	mg/L	C	UJ		NA			
Potassium		NA						NA				*F	3.050	mg/L	C	-
Potassium	FILT	2.380	mg/L	C	-		FILT	2.510	mg/L	C	J		NA			
Selenium		NA						NA				*F	0.002	mg/L	C	U
Selenium	FILT	0.002	mg/L	C	UJ		FILT	0.002	mg/L	C	U		NA			
Silicon		NA						NA				*F	3.890	mg/L	C	-
Silicon	FILT	4.240	mg/L	C	J		FILT	4.170	mg/L	C	J		NA			
Silver		NA						NA				*F	0.012	mg/L	C	-
Silver	FILT	0.012	mg/L	C	-		FILT	0.011	mg/L	C	J		NA			
Sodium		NA						NA				*F	12.600	mg/L	C	-
Sodium	FILT	9.940	mg/L	C	-		FILT	10.300	mg/L	C	J		NA			
Vanadium		NA						NA				*F	0.010	mg/L	C	U
Vanadium	FILT	0.016	mg/L	C	-		FILT	0.017	mg/L	C	J		NA			
General Chemistry																
Ammonia	UNFI	0.100	mg/L	C	U		UNFI	0.100	mg/L	C	U	UNFI	0.100	mg/L	C	U

0842

5174

TABLE F-11A
(Continued)

PHASE I - CHEMICAL PARAMETERS

BORING NUMBER		3065				3065				3385			
SAMPLE NUMBER		004098				004249				004309			
SAMPLING DATE		05/31/89				04/09/90				07/24/90			
CHEMICAL PARAMETERS	FLTD	RESULTS	UNITS	L	VQ	FLTD	RESULTS	UNITS	L	VQ	FLTD	RESULTS	UNITS	L	VQ
General Chemistry															
Chloride	UNFI	20.000	mg/L	C	-	UNFI	9.940	mg/L	C	-	UNFI	13.900	mg/L	C	-
Fluoride	UNFI	0.170	mg/L	C	J	UNFI	0.100	mg/L	C	J	UNFI	0.140	mg/L	C	-
Nitrate	UNFI	0.100	mg/L	C	R	UNFI	0.170	mg/L	C	J	UNFI	0.250	mg/L	C	R
Phenols	UNFI	0.027	mg/L	C	-	UNFI	0.017	mg/L	C	-	UNFI	0.010	mg/L	C	U
Phosphorus	UNFI	0.020	mg/L	C	U	UNFI	0.030	mg/L	C	U	UNFI	0.480	mg/L	C	-
Sulfate	UNFI	106.000	mg/L	C	-	UNFI	89.100	mg/L	C	J	UNFI	75.200	mg/L	C	-
Sulfide	UNFI	1.000	mg/L	C	U	UNFI	0.500	mg/L	C	UJ	UNFI	0.500	mg/L	C	UJ
Total Kjeldahl Nitrogen	UNFI	0.112	mg/L	C	-		NA					NA			
Total Organic Carbon	UNFI	1.000	mg/L	C	U		NA				UNFI	1.500	mg/L	C	-
Total Organic Halides	UNFI	0.010	mg/L	C	J	UNFI	0.010	mg/L	C	U	UNFI	0.010	mg/L	C	UJ
Total Organic Nitrogen	UNFI	0.112	mg/L	C	J	UNFI	0.100	mg/L	C	U	UNFI	0.180	mg/L	C	-

0343

TABLE F-11A
(Continued)

PHASE I - CHEMICAL PARAMETERS

BORING NUMBER		3385				4014				4014			
SAMPLE NUMBER		004363				003871				004089			
SAMPLING DATE		01/10/91				01/31/89				05/01/89			
CHEMICAL PARAMETERS	FLTD	RESULTS	UNITS	L	VQ	FLTD	RESULTS	UNITS	L VQ	FLTD	RESULTS	UNITS	L VQ
Inorganics													
Aluminum	FILT	0.069	mg/L	C	-		NA				NA		
Arsenic	FILT	0.002	mg/L	C	U	FILT	0.002	mg/L	C U	FILT	0.002	mg/L	C U
Barium	FILT	0.059	mg/L	C	-	FILT	0.071	mg/L	C -	FILT	0.069	mg/L	C -
Cadmium	FILT	0.003	mg/L	C	-	FILT	0.002	mg/L	C U	FILT	0.003	mg/L	C -
Calcium	FILT	85.800	mg/L	C	-	FILT	92.700	mg/L	C -	FILT	92.000	mg/L	C -
Chromium	FILT	0.017	mg/L	C	-	FILT	0.023	mg/L	C -	FILT	0.014	mg/L	C U
Copper	FILT	0.010	mg/L	C	U	FILT	0.012	mg/L	C -	FILT	0.010	mg/L	C U
Iron	FILT	0.343	mg/L	C	-	FILT	2.510	mg/L	C -	FILT	1.910	mg/L	C -
Lead	FILT	0.003	mg/L	C	-	FILT	0.002	mg/L	C U	FILT	0.011	mg/L	C R
Magnesium	FILT	23.000	mg/L	C	-	FILT	22.700	mg/L	C -	FILT	22.100	mg/L	C -
Manganese	FILT	0.328	mg/L	C	-	FILT	0.317	mg/L	C -	FILT	0.350	mg/L	C -
Mercury	FILT	0.000	mg/L	C	U	FILT	0.006	mg/L	C -	FILT	0.003	mg/L	C -
Molybdenum	FILT	0.010	mg/L	C	U	FILT	0.020	mg/L	C U	FILT	0.010	mg/L	C U
Nickel	FILT	0.020	mg/L	C	U	FILT	0.020	mg/L	C U	FILT	0.020	mg/L	C U
Potassium	FILT	2.850	mg/L	C	-	FILT	2.520	mg/L	C -	FILT	2.220	mg/L	C -
Selenium	FILT	0.002	mg/L	C	U	FILT	0.003	mg/L	C -	FILT	0.002	mg/L	C R
Silicon	FILT	3.850	mg/L	C	-		NA				NA		
Silver	FILT	0.018	mg/L	C	-	FILT	0.001	mg/L	C U	FILT	0.001	mg/L	C U
Sodium	FILT	11.200	mg/L	C	-	FILT	10.400	mg/L	C -	FILT	10.200	mg/L	C -
Vanadium	FILT	0.010	mg/L	C	U		NA				NA		
General Chemistry													
Ammonia	UNFI	0.100	mg/L	C	U		NA			UNFI	0.100	mg/L	C U
Ammonia		NA				UNKN	0.202	mg/L	C -		NA		
Chloride	UNFI	26.700	mg/L	C	-	UNFI	18.000	mg/L	C -	UNFI	21.500	mg/L	C -
Fluoride	UNFI	0.150	mg/L	C	U	UNFI	0.062	mg/L	C -	UNFI	0.140	mg/L	C -
Nitrate	UNFI	0.360	mg/L	C	J	UNFI	0.100	mg/L	C U	UNFI	0.160	mg/L	C J
Phenols	UNFI	0.010	mg/L	C	U	UNFI	0.100	mg/L	C -	UNFI	0.035	mg/L	C -
Phosphorus	UNFI	0.020	mg/L	C	U		NA			UNFI	0.124	mg/L	C -
Sulfate	UNFI	74.130	mg/L	C	-	UNFI	58.400	mg/L	C -	UNFI	72.000	mg/L	C J
Sulfide	UNFI	0.500	mg/L	C	U		NA				NA		
Total Kjeldahl Nitrogen		NA				UNFI	0.192	mg/L	C -	UNFI	0.100	mg/L	C U
Total Organic Carbon	UNFI	2.640	mg/L	C	-		NA				NA		
Total Organic Halides	UNFI	0.164	mg/L	C	-	UNFI	0.010	mg/L	C R	UNFI	0.010	mg/L	C U
Total Organic Nitrogen	UNFI	0.160	mg/L	C	R	UNFI	0.100	mg/L	C U	UNFI	0.100	mg/L	C UJ

0844

5174

TABLE F-11A
(Continued)

PHASE I - CHEMICAL PARAMETERS

BORING NUMBER		4016			
SAMPLE NUMBER		003996			
SAMPLING DATE		01/20/89			
CHEMICAL PARAMETERS	FLTD	RESULTS	UNITS	L	VQ
Inorganics					
Arsenic	FILT	0.002	mg/L	C	U
Barium	FILT	0.039	mg/L	C	-
Cadmium	FILT	0.005	mg/L	C	-
Calcium	FILT	109.000	mg/L	C	-
Chromium	FILT	0.024	mg/L	C	-
Copper	FILT	0.012	mg/L	C	-
Iron	FILT	1.560	mg/L	C	-
Lead	FILT	0.002	mg/L	C	R
Magnesium	FILT	27.800	mg/L	C	-
Manganese	FILT	1.020	mg/L	C	-
Mercury	FILT	0.000	mg/L	C	U
Molybdenum	FILT	0.020	mg/L	C	U
Nickel	FILT	0.020	mg/L	C	U
Potassium	FILT	1.280	mg/L	C	-
Selenium	FILT	0.002	mg/L	C	UJ
Silver	FILT	0.001	mg/L	C	R
Sodium	FILT	4.480	mg/L	C	-
General Chemistry					
Ammonia	UNFI	0.210	mg/L	C	J
Chloride	UNFI	6.500	mg/L	C	-
Fluoride	UNFI	0.110	mg/L	C	J
Nitrate	UNFI	0.100	mg/L	C	R
Phenols	UNFI	0.011	mg/L	C	-
Sulfate	UNFI	97.500	mg/L	C	-
Total Kjeldahl Nitrogen	UNFI	0.520	mg/L	C	R
Total Organic Halides	UNFI	0.016	mg/L	C	J
Total Organic Nitrogen	UNFI	0.310	mg/L	C	-

TABLE F-11A
(Continued)

PHASE II - RADIOLOGICAL PARAMETERS

BORING NUMBER		1046				1065				1065		
SAMPLE NUMBER		116231				112013				112014		
SAMPLING DATE		05/11/93				05/04/93				05/04/93		
RADIOLOGICAL PARAMETERS	FLTD	RESULTS	UNITS	VQ	FLTD	RESULTS	UNITS	VQ	FLTD	RESULTS	UNITS	VQ
CS-137	UNFI	16.800	pci/L	UJ	UNFI	10.500	pci/L	UJ	UNFI	10.100	pci/L	UJ
GROSS ALPHA	UNFI	9.790	pci/L	UJ	UNFI	9.020	pci/L	UJ		NA		
GROSS BETA	UNFI	8.810	pci/L	J	UNFI	5.090	pci/L	UJ		NA		
NP-237	UNFI	0.480	pci/L	N	UNFI	0.220	pci/L	N	UNFI	0.300	pci/L	N
PU-238	UNFI	0.065	pci/L	UJ	UNFI	0.090	pci/L	J	UNFI	0.120	pci/L	UJ
PU-239/240	UNFI	0.135	pci/L	UJ	UNFI	0.110	pci/L	U	UNFI	0.120	pci/L	UJ
RA-226	UNFI	0.128	pci/L	UJ	UNFI	0.130	pci/L	UJ	UNFI	0.090	pci/L	UJ
RA-228	UNFI	2.280	pci/L	UJ	UNFI	1.460	pci/L	UJ	UNFI	1.250	pci/L	UJ
RU-106	UNFI	115.000	pci/L	UJ	UNFI	150.000	pci/L	UJ	UNFI	131.000	pci/L	UJ
SR-90	UNFI	0.722	pci/L	UJ	UNFI	0.810	pci/L	UJ	UNFI	1.820	pci/L	U
TC-99	UNFI	8.100	pci/L	UJ	UNFI	10.700	pci/L	UJ	UNFI	10.900	pci/L	UJ
TH-228	UNFI	0.134	pci/L	UJ	UNFI	0.170	pci/L	UJ	UNFI	0.350	pci/L	UJ
TH-230	UNFI	0.347	pci/L	J	UNFI	0.360	pci/L	U	UNFI	0.110	pci/L	J
TH-232	UNFI	0.134	pci/L	UJ	UNFI	0.120	pci/L	UJ	UNFI	0.100	pci/L	UJ
TH-TOTAL	UNFI	1.230	ug/L	UJ	UNFI	1.120	ug/L	UJ	UNFI	0.920	ug/L	UJ
U-234	UNFI	7.830	pci/L	-	UNFI	0.540	pci/L	J	UNFI	20.300	pci/L	-
U-235/236	UNFI	0.479	pci/L	J	UNFI	0.160	pci/L	UJ	UNFI	0.060	pci/L	UJ
U-238	UNFI	7.910	pci/L	-	UNFI	0.540	pci/L	J	UNFI	0.470	pci/L	-
U-TOTAL	UNFI	18.900	ug/L	-	UNFI	1.360	ug/L	-	UNFI	1.100	ug/L	-

0846

5174

TABLE F-11A
(Continued)

PHASE II - RADIOLOGICAL PARAMETERS

BORING NUMBER		11032				11085				1941			
SAMPLE NUMBER		113869				113792				112997			
SAMPLING DATE		06/30/93				06/16/93				04/30/93			
RADIOLOGICAL PARAMETERS	FLTD	RESULTS	UNITS	VQ	FLTD	RESULTS	UNITS	VQ	FLTD	RESULTS	UNITS	VQ
CS-137	FILT	13.200	pci/L	UJ	FILT	18.000	pci/L	UJ		NA		
CS-137	UNFI	17.300	pci/L	UJ	UNFI	14.000	pci/L	UJ	UNFI	18.400	pci/L	UJ
GROSS ALPHA	FILT	8.190	pci/L	UJ	FILT	12.100	pci/L	J		NA		
GROSS ALPHA	UNFI	26.600	pci/L	UJ	UNFI	198.000	pci/L	J	UNFI	314.000	pci/L	J
GROSS BETA	FILT	6.640	pci/L	J	FILT	4.850	pci/L	UJ		NA		
GROSS BETA	UNFI	67.500	pci/L	J	UNFI	426.000	pci/L	J	UNFI	123.000	pci/L	J
NP-237	FILT	0.470	pci/L	U	FILT	0.590	pci/L	N		NA		
NP-237	UNFI	3.100	pci/L	UJ	UNFI	0.265	pci/L	U	UNFI	0.340	pci/L	U
PU-238	FILT	0.150	pci/L	UJ	FILT	0.385	pci/L	J		NA		
PU-238	UNFI	0.190	pci/L	J	UNFI	0.311	pci/L	J	UNFI	0.075	pci/L	U
PU-239/240	FILT	0.150	pci/L	U	FILT	0.204	pci/L	J		NA		
PU-239/240	UNFI	0.080	pci/L	UJ	UNFI	0.120	pci/L	J	UNFI	0.051	pci/L	UJ
RA-226	FILT	0.130	pci/L	UJ	FILT	0.113	pci/L	UJ		NA		
RA-226		NA			UNFI	1.360	pci/L	J	UNFI	1.000	pci/L	R
RA-228	FILT	1.180	pci/L	UJ	FILT	1.430	pci/L	U		NA		
RA-228		NA			UNFI	5.450	pci/L	UJ	UNFI	3.000	pci/L	R
RU-106	FILT	132.000	pci/L	UJ	FILT	143.000	pci/L	UJ		NA		
RU-106	UNFI	144.000	pci/L	UJ	UNFI	109.000	pci/L	UJ	UNFI	158.000	pci/L	UJ
SR-90	FILT	1.330	pci/L	J	FILT	0.753	pci/L	UJ		NA		
SR-90	UNFI	0.500	pci/L	UJ	UNFI	1.020	pci/L	UJ	UNFI	3.310	pci/L	J
TC-99	FILT	12.000	pci/L	UJ	FILT	10.200	pci/L	UJ		NA		
TC-99	UNFI	11.600	pci/L	UJ	UNFI	10.400	pci/L	UJ	UNFI	9.400	pci/L	UJ
TH-228	FILT	0.270	pci/L	UJ	FILT	0.344	pci/L	UJ		NA		
TH-228		NA			UNFI	9.870	pci/L	-	UNFI	0.025	pci/L	UJ
TH-230	FILT	0.180	pci/L	UJ	FILT	2.360	pci/L	J		NA		
TH-230		NA			UNFI	11.200	pci/L	-	UNFI	0.220	pci/L	J
TH-232	FILT	0.070	pci/L	UJ	FILT	0.216	pci/L	J		NA		
TH-232		NA			UNFI	8.560	pci/L	-	UNFI	0.020	pci/L	UJ
TH-TOTAL	FILT	0.640	ug/L	UJ	FILT	1.970	ug/L	J		NA		
TH-TOTAL		NA			UNFI	78.000	ug/L	-	UNFI	0.180	ug/L	UJ
U-234	FILT	2.620	pci/L	-	FILT	1.720	pci/L	-		NA		
U-234	UNFI	8.720	pci/L	-	UNFI	7.460	pci/L	-	UNFI	216.000	pci/L	-
U-235/236	FILT	0.120	pci/L	-	FILT	0.139	pci/L	UJ		NA		
U-235/236	UNFI	0.340	pci/L	-	UNFI	0.303	pci/L	J	UNFI	10.700	pci/L	-
U-238	FILT	2.430	pci/L	-	FILT	1.430	pci/L	-		NA		
U-238	UNFI	8.870	pci/L	-	UNFI	7.090	pci/L	-	UNFI	220.000	pci/L	-
U-TOTAL	FILT	6.140	ug/L	J	FILT	4.330	ug/L	-		NA		
U-TOTAL	UNFI	22.600	ug/L	J	UNFI	13.700	ug/L	-	UNFI	547.000	ug/L	-

5174
0347

TABLE F-11A
(Continued)

PHASE II - RADIOLOGICAL PARAMETERS

BORING NUMBER		1941				1942				1942			
SAMPLE NUMBER		113316				113000				113319			
SAMPLING DATE		05/28/93				05/01/93				05/28/93			
RADIOLOGICAL PARAMETERS	FLTD	RESULTS	UNITS	VQ	FLTD	RESULTS	UNITS	VQ	FLTD	RESULTS	UNITS	VQ
CS-137	UNFI	16.300	pci/L	UJ	UNFI	12.900	pci/L	UJ	UNFI	14.800	pci/L	UJ
GROSS ALPHA	UNFI	609.000	pci/L	J	UNFI	220.000	pci/L	J	UNFI	1080.000	pci/L	J
GROSS BETA	UNFI	314.000	pci/L	-	UNFI	66.900	pci/L	J	UNFI	638.000	pci/L	-
NP-237	UNFI	0.263	pci/L	R	UNFI	0.395	pci/L	N	UNFI	0.100	pci/L	R
PU-238	UNFI	0.326	pci/L	U	UNFI	0.560	pci/L	J	UNFI	0.082	pci/L	UJ
PU-239/240	UNFI	0.319	pci/L	UJ	UNFI	0.088	pci/L	U	UNFI	0.039	pci/L	UJ
RA-226	UNFI	1.050	pci/L	J	UNFI	0.158	pci/L	UJ	UNFI	1.380	pci/L	R
RA-228	UNFI	1.190	pci/L	UJ	UNFI	1.760	pci/L	UJ	UNFI	1.580	pci/L	UJ
RU-106	UNFI	100.000	pci/L	UJ	UNFI	110.000	pci/L	UJ	UNFI	148.000	pci/L	UJ
SR-90	UNFI	0.598	pci/L	UJ	UNFI	3.050	pci/L	J	UNFI	0.629	pci/L	UJ
TC-99	UNFI	13.100	pci/L	UJ	UNFI	8.600	pci/L	UJ	UNFI	14.100	pci/L	UJ
TH-228	UNFI	3.870	pci/L	-	UNFI	0.196	pci/L	UJ	UNFI	2.210	pci/L	-
TH-230	UNFI	6.800	pci/L	-	UNFI	0.265	pci/L	J	UNFI	3.900	pci/L	-
TH-232	UNFI	3.750	pci/L	-	UNFI	0.062	pci/L	UJ	UNFI	1.770	pci/L	-
TH-TOTAL	UNFI	34.200	ug/L	-	UNFI	0.569	ug/L	UJ	UNFI	16.200	ug/L	J
U-234	UNFI	166.000	pci/L	-	UNFI	123.000	pci/L	-	UNFI	223.000	pci/L	-
U-235/236	UNFI	8.480	pci/L	-	UNFI	6.230	pci/L	-	UNFI	15.700	pci/L	-
U-238	UNFI	176.000	pci/L	-	UNFI	125.000	pci/L	-	UNFI	229.000	pci/L	-
U-TOTAL	UNFI	388.000	ug/L	-	UNFI	340.000	ug/L	-	UNFI	573.000	ug/L	-

0848

FEMP OU02-0174
February 18, 1994

TABLE F-11A
(Continued)

PHASE II - RADIOLOGICAL PARAMETERS

BORING NUMBER		1954				2014				2046			
SAMPLE NUMBER		113798				111992				116233			
SAMPLING DATE		06/22/93				04/30/93				05/11/93			
RADIOLOGICAL PARAMETERS	FLTD	RESULTS	UNITS	VQ	FLTD	RESULTS	UNITS	VQ	FLTD	RESULTS	UNITS	VQ
CS-137	FILT	12.800	pci/L	UJ		NA				NA		
CS-137	UNFI	14.400	pci/L	UJ	UNFI	11.700	pci/L	UJ	UNFI	11.900	pci/L	UJ
GROSS ALPHA	FILT	61.000	pci/L	J		NA				NA		
GROSS ALPHA	UNFI	38.000	pci/L	J	UNFI	5.740	pci/L	UJ	UNFI	319.000	pci/L	J
GROSS BETA	FILT	18.300	pci/L	J		NA				NA		
GROSS BETA	UNFI	41.000	pci/L	J	UNFI	7.030	pci/L	J	UNFI	96.600	pci/L	J
NP-237	FILT	0.110	pci/L	U		NA				NA		
NP-237	UNFI	0.177	pci/L	U	UNFI	0.480	pci/L	N	UNFI	0.710	pci/L	N
PU-238	FILT	0.088	pci/L	UJ		NA				NA		
PU-238	UNFI	0.091	pci/L	UJ	UNFI	0.120	pci/L	U	UNFI	0.152	pci/L	J
PU-239/240	FILT	0.140	pci/L	U		NA				NA		
PU-239/240	UNFI	0.193	pci/L	J	UNFI	0.055	pci/L	U	UNFI	0.156	pci/L	U
RA-226	FILT	0.119	pci/L	J		NA				NA		
RA-226	UNFI	1.460	pci/L	-	UNFI	0.170	pci/L	J	UNFI	0.487	pci/L	J
RA-228	FILT	1.160	pci/L	UJ		NA				NA		
RA-228	UNFI	1.470	pci/L	U	UNFI	1.310	pci/L	UJ	UNFI	3.400	pci/L	UJ
RU-106	FILT	132.000	pci/L	UJ		NA				NA		
RU-106	UNFI	124.000	pci/L	UJ	UNFI	150.000	pci/L	UJ	UNFI	115.000	pci/L	UJ
SR-90	FILT	0.808	pci/L	UJ		NA				NA		
SR-90	UNFI	0.767	pci/L	UJ	UNFI	0.990	pci/L	UJ	UNFI	0.722	pci/L	UJ
TC-99	FILT	10.400	pci/L	UJ		NA				NA		
TC-99	UNFI	11.400	pci/L	UJ	UNFI	8.400	pci/L	UJ	UNFI	8.600	pci/L	UJ
TH-228	FILT	0.312	pci/L	UJ		NA				NA		
TH-228	UNFI	1.100	pci/L	-	UNFI	0.200	pci/L	UJ	UNFI	0.294	pci/L	UJ
TH-230	FILT	0.315	pci/L	J		NA				NA		
TH-230	UNFI	1.180	pci/L	-	UNFI	0.460	pci/L	J	UNFI	0.186	pci/L	J
TH-232	FILT	0.292	pci/L	UJ		NA				NA		
TH-232	UNFI	0.938	pci/L	J	UNFI	0.053	pci/L	UJ	UNFI	0.138	pci/L	UJ
TH-TOTAL	FILT	2.690	ug/L	UJ		NA				NA		
TH-TOTAL	UNFI	8.550	ug/L	-	UNFI	0.490	ug/L	UJ	UNFI	1.270	ug/L	UJ
U-234	FILT	27.900	pci/L	-		NA				NA		
U-234	UNFI	18.600	pci/L	-	UNFI	3.490	pci/L	-	UNFI	160.000	pci/L	-
U-235/236	FILT	1.720	pci/L	-		NA				NA		
U-235/236	UNFI	0.936	pci/L	J	UNFI	0.220	pci/L	J	UNFI	8.720	pci/L	-
U-238	FILT	29.500	pci/L	-		NA				NA		
U-238	UNFI	19.100	pci/L	-	UNFI	3.290	pci/L	-	UNFI	172.000	pci/L	-
U-TOTAL	FILT	64.500	ug/L	-		NA				NA		
U-TOTAL	UNFI	38.900	ug/L	-	UNFI	9.050	ug/L	-	UNFI	423.000	ug/L	-

0349

5174

TABLE F-11A
(Continued)

PHASE II - RADIOLOGICAL PARAMETERS

BORING NUMBER		2065				2065				2385		
SAMPLE NUMBER		112008				113291				111998		
SAMPLING DATE		05/03/93				05/03/93				04/28/93		
RADIOLOGICAL PARAMETERS	FLTD	RESULTS	UNITS	VQ	FLTD	RESULTS	UNITS	VQ	FLTD	RESULTS	UNITS	VQ
CS-137		NA			FILT	15.400	pci/L	UJ		NA		
CS-137	UNFI	15.500	pci/L	UJ		NA			UNFI	17.000	pci/L	UJ
GROSS ALPHA		NA			FILT	9.400	pci/L	UJ		NA		
GROSS ALPHA	UNFI	10.700	pci/L	UJ		NA			UNFI	49.700	pci/L	J
GROSS BETA		NA			FILT	6.620	pci/L	J		NA		
GROSS BETA	UNFI	6.920	pci/L	J		NA			UNFI	25.500	pci/L	J
NP-237		NA			FILT	0.255	pci/L	R		NA		
NP-237	UNFI	0.331	pci/L	R		NA			UNFI	0.208	pci/L	U
PU-238		NA			FILT	0.217	pci/L	UJ		NA		
PU-238	UNFI	0.690	pci/L	R		NA			UNFI	0.637	pci/L	J
PU-239/240		NA			FILT	0.372	pci/L	UJ		NA		
PU-239/240	UNFI	0.690	pci/L	R		NA			UNFI	0.089	pci/L	UJ
RA-226		NA			FILT	0.105	pci/L	UJ		NA		
RA-226	UNFI	0.183	pci/L	UJ		NA			UNFI	0.177	pci/L	UJ
RA-228		NA			FILT	1.890	pci/L	UJ		NA		
RA-228	UNFI	3.210	pci/L	UJ		NA			UNFI	3.290	pci/L	UJ
RU-106		NA			FILT	150.000	pci/L	UJ		NA		
RU-106	UNFI	105.000	pci/L	UJ		NA			UNFI	137.000	pci/L	UJ
SR-90		NA			FILT	6.980	pci/L	UJ		NA		
SR-90	UNFI	0.718	pci/L	UJ		NA			UNFI	0.853	pci/L	UJ
TC-99		NA			FILT	7.900	pci/L	UJ		NA		
TC-99	UNFI	8.400	pci/L	UJ		NA			UNFI	9.800	pci/L	UJ
TH-228		NA			FILT	0.271	pci/L	UJ		NA		
TH-228	UNFI	3.640	pci/L	R		NA			UNFI	0.145	pci/L	UJ
TH-230		NA			FILT	0.323	pci/L	UJ		NA		
TH-230	UNFI	3.060	pci/L	R		NA			UNFI	0.211	pci/L	J
TH-232		NA			FILT	0.239	pci/L	UJ		NA		
TH-232	UNFI	3.370	pci/L	R		NA			UNFI	0.082	pci/L	UJ
TH-TOTAL		NA			FILT	2.200	ug/L	UJ		NA		
TH-TOTAL	UNFI	31.000	ug/L	R		NA			UNFI	0.750	ug/L	UJ
U-234		NA			FILT	5.430	pci/L	-		NA		
U-234	UNFI	4.810	pci/L	-		NA			UNFI	33.700	pci/L	-
U-235/236		NA			FILT	0.367	pci/L	UJ		NA		
U-235/236	UNFI	0.311	pci/L	J		NA			UNFI	1.690	pci/L	-
U-238		NA			FILT	3.390	pci/L	-		NA		
U-238	UNFI	3.640	pci/L	-		NA			UNFI	37.100	pci/L	-
U-TOTAL		NA			FILT	9.960	ug/L	-		NA		
U-TOTAL	UNFI	9.940	ug/L	-		NA			UNFI	98.700	ug/L	-

0850

TABLE F-11A
(Continued)

PHASE II - RADIOLOGICAL PARAMETERS

BORING NUMBER		2401				2943				2943			
SAMPLE NUMBER		116229				113003				113314			
SAMPLING DATE		05/11/93				05/05/93				05/27/93			
RADIOLOGICAL PARAMETERS	FLTD	RESULTS	UNITS	VQ	FLTD	RESULTS	UNITS	VQ	FLTD	RESULTS	UNITS	VQ
CS-137	UNFI	12.900	pci/L	UJ	UNFI	16.800	pci/L	UJ	UNFI	14.000	pci/L	UJ
GROSS ALPHA	UNFI	5.320	pci/L	UJ	UNFI	7.040	pci/L	UJ	UNFI	9.990	pci/L	UJ
GROSS BETA	UNFI	4.920	pci/L	UJ	UNFI	4.940	pci/L	UJ	UNFI	6.640	pci/L	UJ
NP-237	UNFI	0.841	pci/L	N	UNFI	0.150	pci/L	N	UNFI	0.823	pci/L	U
PU-238	UNFI	0.256	pci/L	J	UNFI	0.070	pci/L	UJ	UNFI	0.075	pci/L	J
PU-239/240	UNFI	0.220	pci/L	UJ	UNFI	0.180	pci/L	UJ	UNFI	0.218	pci/L	U
RA-226	UNFI	0.374	pci/L	UJ	UNFI	0.130	pci/L	J	UNFI	0.275	pci/L	J
RA-228	UNFI	0.215	pci/L	UJ	UNFI	1.790	pci/L	UJ	UNFI	1.040	pci/L	UJ
RU-106	UNFI	113.000	pci/L	UJ	UNFI	129.000	pci/L	UJ	UNFI	137.000	pci/L	UJ
SR-90	UNFI	0.804	pci/L	UJ	UNFI	0.620	pci/L	UJ	UNFI	0.590	pci/L	UJ
TC-99	UNFI	8.700	pci/L	UJ	UNFI	11.200	pci/L	UJ	UNFI	12.000	pci/L	UJ
TH-228	UNFI	0.202	pci/L	UJ	UNFI	0.320	pci/L	UJ	UNFI	0.290	pci/L	UJ
TH-230	UNFI	0.298	pci/L	J	UNFI	2.060	pci/L	-	UNFI	0.258	pci/L	U
TH-232	UNFI	0.115	pci/L	UJ	UNFI	0.260	pci/L	UJ	UNFI	0.140	pci/L	UJ
TH-TOTAL	UNFI	1.060	ug/L	UJ	UNFI	2.390	ug/L	UJ	UNFI	1.290	ug/L	UJ
U-234	UNFI	1.590	pci/L	J	UNFI	1.190	pci/L	-	UNFI	1.230	pci/L	-
U-235/236	UNFI	0.157	pci/L	UJ	UNFI	0.710	pci/L	J	UNFI	0.757	pci/L	J
U-238	UNFI	1.440	pci/L	J	UNFI	1.310	pci/L	-	UNFI	1.100	pci/L	-
U-TOTAL	UNFI	5.130	ug/L	-	UNFI	2.930	ug/L	-	UNFI	3.000	ug/L	-

0351

TABLE F-11A
(Continued)

PHASE II - RADIOLOGICAL PARAMETERS

BORING NUMBER		2943				2944				2945			
SAMPLE NUMBER		113315 DUPLICATE				113866				112994			
SAMPLING DATE		05/27/93				06/30/93				04/28/93			
RADIOLOGICAL PARAMETERS	FLTD	RESULTS	UNITS	VQ	FLTD	RESULTS	UNITS	VQ	FLTD	RESULTS	UNITS	VQ
CS-137		NA			FILT	19.500	pci/L	UJ		NA		
CS-137	UNFI	16.000	pci/L	UJ	UNFI	11.100	pci/L	UJ	UNFI	15.100	pci/L	UJ
GROSS ALPHA		NA			FILT	10.200	pci/L	UJ		NA		
GROSS ALPHA	UNFI	8.640	pci/L	UJ	UNFI	6.580	pci/L	UJ	UNFI	1410.000	pci/L	J
GROSS BETA		NA			FILT	12.700	pci/L	J		NA		
GROSS BETA	UNFI	8.370	pci/L	-	UNFI	6.020	pci/L	UJ	UNFI	520.000	pci/L	J
NP-237		NA			FILT	0.420	pci/L	U		NA		
NP-237	UNFI	0.698	pci/L	U	UNFI	0.750	pci/L	U	UNFI	0.796	pci/L	J
PU-238		NA			FILT	0.320	pci/L	UJ		NA		
PU-238	UNFI	0.065	pci/L	J	UNFI	0.090	pci/L	UJ	UNFI	0.114	pci/L	U
PU-239/240		NA			FILT	0.230	pci/L	U		NA		
PU-239/240	UNFI	0.495	pci/L	U	UNFI	0.180	pci/L	UJ	UNFI	0.166	pci/L	U
RA-226		NA			FILT	0.160	pci/L	UJ		NA		
RA-226	UNFI	0.163	pci/L	J	UNFI	0.220	pci/L	UJ	UNFI	0.300	pci/L	J
RA-228		NA			FILT	1.140	pci/L	UJ		NA		
RA-228	UNFI	1.550	pci/L	UJ	UNFI	1.710	pci/L	UJ	UNFI	1.370	pci/L	UJ
RU-106		NA			FILT	110.000	pci/L	UJ		NA		
RU-106	UNFI	139.000	pci/L	UJ	UNFI	12.300	pci/L	UJ	UNFI	77.000	pci/L	UJ
SR-90		NA			FILT	0.660	pci/L	UJ		NA		
SR-90	UNFI	0.620	pci/L	UJ	UNFI	0.650	pci/L	UJ	UNFI	0.844	pci/L	UJ
TC-99		NA			FILT	11.500	pci/L	UJ		NA		
TC-99	UNFI	12.100	pci/L	UJ	UNFI	11.700	pci/L	UJ	UNFI	9.100	pci/L	UJ
TH-228		NA			FILT	0.380	pci/L	UJ		NA		
TH-228	UNFI	0.320	pci/L	UJ	UNFI	0.520	pci/L	UJ	UNFI	0.082	pci/L	UJ
TH-230		NA			FILT	0.320	pci/L	UJ		NA		
TH-230	UNFI	0.232	pci/L	J	UNFI	0.440	pci/L	UJ	UNFI	0.464	pci/L	J
TH-232		NA			FILT	0.240	pci/L	UJ		NA		
TH-232	UNFI	0.072	pci/L	UJ	UNFI	0.150	pci/L	UJ	UNFI	0.044	pci/L	J
TH-TOTAL		NA			FILT	2.160	ug/L	UJ		NA		
TH-TOTAL	UNFI	0.662	ug/L	UJ	UNFI	1.380	ug/L	UJ	UNFI	0.398	ug/L	J
U-234		NA			FILT	0.670	pci/L	-		NA		
U-234	UNFI	0.892	pci/L	J	UNFI	0.830	pci/L	-	UNFI	662.000	pci/L	-
U-235/236		NA			FILT	0.140	pci/L	UJ		NA		
U-235/236	UNFI	0.150	pci/L	UJ	UNFI	0.150	pci/L	UJ	UNFI	31.700	pci/L	-
U-238		NA			FILT	0.440	pci/L	J		NA		
U-238	UNFI	1.250	pci/L	-	UNFI	0.760	pci/L	-	UNFI	707.000	pci/L	-
U-TOTAL		NA			FILT	1.520	ug/L	-		NA		
U-TOTAL	UNFI	3.200	ug/L	-	UNFI	1.670	ug/L	-	UNFI	2070.000	ug/L	-

TABLE F-11A
(Continued)

PHASE II - RADIOLOGICAL PARAMETERS

BORING NUMBER		2945				2954		
SAMPLE NUMBER		113313				113795		
SAMPLING DATE		05/26/93				06/21/93		
RADIOLOGICAL PARAMETERS	FLTD	RESULTS	UNITS	VQ	FLTD	RESULTS	UNITS	VQ
CS-137		NA			FILT	14.700	pci/L	UJ
CS-137	UNFI	16.000	pci/L	UJ	UNFI	17.700	pci/L	UJ
GROSS ALPHA		NA			FILT	553.000	pci/L	J
GROSS ALPHA	UNFI	1120.000	pci/L	J	UNFI	781.000	pci/L	J
GROSS BETA		NA			FILT	150.000	pci/L	J
GROSS BETA	UNFI	411.000	pci/L	-	UNFI	158.000	pci/L	J
NP-237		NA			FILT	0.698	pci/L	N
NP-237	UNFI	0.962	pci/L	J	UNFI	0.919	pci/L	R
PU-238		NA			FILT	0.107	pci/L	UJ
PU-238	UNFI	0.082	pci/L	UJ	UNFI	0.044	pci/L	UJ
PU-239/240		NA			FILT	0.103	pci/L	U
PU-239/240	UNFI	0.436	pci/L	U	UNFI	0.044	pci/L	UJ
RA-226		NA			FILT	0.712	pci/L	J
RA-226	UNFI	0.536	pci/L	J	UNFI	0.219	pci/L	J
RA-228		NA			FILT	1.600	pci/L	UJ
RA-228	UNFI	1.350	pci/L	UJ	UNFI	1.190	pci/L	UJ
RU-106		NA			FILT	111.000	pci/L	UJ
RU-106	UNFI	98.000	pci/L	UJ	UNFI	132.000	pci/L	UJ
SR-90		NA			FILT	1.170	pci/L	J
SR-90	UNFI	0.700	pci/L	UJ	UNFI	0.813	pci/L	UJ
TC-99		NA			FILT	10.200	pci/L	UJ
TC-99	UNFI	12.000	pci/L	UJ	UNFI	10.100	pci/L	UJ
TH-228		NA			FILT	0.199	pci/L	UJ
TH-228	UNFI	0.240	pci/L	UJ	UNFI	0.207	pci/L	UJ
TH-230		NA			FILT	0.253	pci/L	J
TH-230	UNFI	0.469	pci/L	J	UNFI	0.300	pci/L	J
TH-232		NA			FILT	0.114	pci/L	UJ
TH-232	UNFI	0.160	pci/L	UJ	UNFI	0.136	pci/L	UJ
TH-TOTAL		NA			FILT	1.050	ug/L	UJ
TH-TOTAL	UNFI	1.470	mg/kg	UJ	UNFI	1.250	ug/L	UJ
U-234		NA			FILT	357.500	pci/L	-
U-234	UNFI	719.000	pci/L	R	UNFI	372.000	pci/L	-
U-235/236		NA			FILT	15.700	pci/L	-
U-235/236	UNFI	35.400	pci/L	R	UNFI	15.600	pci/L	-
U-238		NA			FILT	381.000	pci/L	-
U-238	UNFI	729.000	pci/L	R	UNFI	384.000	pci/L	-
U-TOTAL		NA			FILT	1129.000	ug/L	-
U-TOTAL	UNFI	1820.000	mg/kg	-	UNFI	1167.000	ug/L	-

0853

TABLE F-11A
(Continued)

PHASE II - CHEMICAL PARAMETERS

BORING NUMBER		1046					1046					1065				
SAMPLE NUMBER		113312					116231					112013				
SAMPLING DATE		05/28/93					05/11/93					05/04/93				
CHEMICAL PARAMETERS	FLTD	RESULTS	UNITS	L	VQ		FLTD	RESULTS	UNITS	L	VQ	FLTD	RESULTS	UNITS	L	VQ
Inorganics																
Aluminum		NA					UNFI	2.410	mg/L	C	-	UNFI	0.774	mg/L	C	-
Antimony		NA					UNFI	0.005	mg/L	C	UJ	UNFI	0.004	mg/L	C	UJ
Arsenic		NA					UNFI	0.002	mg/L	C	U	UNFI	0.001	mg/L	C	U
Barium		NA					UNFI	0.073	mg/L	C	-	UNFI	0.049	mg/L	C	-
Beryllium		NA					UNFI	0.001	mg/L	C	U	UNFI	0.001	mg/L	C	U
Cadmium		NA					UNFI	0.002	mg/L	C	U	UNFI	0.034	mg/L	C	-
Calcium		NA					UNFI	123.000	mg/L	C	-	UNFI	106.000	mg/L	C	-
Chromium		NA					UNFI	0.006	mg/L	C	-	UNFI	0.005	mg/L	C	-
Cobalt		NA					UNFI	0.003	mg/L	C	U	UNFI	0.003	mg/L	C	U
Copper		NA					UNFI	0.012	mg/L	C	U	UNFI	0.010	mg/L	C	U
Cyanide		NA					UNFI	0.001	mg/L	C	U	UNFI	0.001	mg/L	C	U
Iron		NA					UNFI	5.480	mg/L	C	-	UNFI	1.820	mg/L	C	-
Lead		NA					UNFI	0.003	mg/L	C	-	UNFI	0.002	mg/L	C	-
Magnesium		NA					UNFI	49.500	mg/L	C	-	UNFI	35.500	mg/L	C	-
Manganese		NA					UNFI	0.169	mg/L	C	-	UNFI	0.056	mg/L	C	-
Mercury		NA					UNFI	0.000	mg/L	C	U	UNFI	0.000	mg/L	C	U
Molybdenum		NA					UNFI	0.003	mg/L	C	U	UNFI	0.004	mg/L	C	U
Nickel		NA					UNFI	0.009	mg/L	C	-	UNFI	0.007	mg/L	C	-
Potassium		NA					UNFI	1.420	mg/L	C	-	UNFI	0.894	mg/L	C	U
Selenium		NA					UNFI	0.001	mg/L	C	UJ	UNFI	0.001	mg/L	C	U
Silicon		NA					UNFI	9.140	mg/L	C	-	UNFI	6.610	mg/L	C	-
Silver		NA					UNFI	0.002	mg/L	C	U	UNFI	0.002	mg/L	C	U
Sodium		NA					UNFI	10.800	mg/L	C	-	UNFI	8.810	mg/L	C	-
Thallium		NA					UNFI	0.001	mg/L	C	U	UNFI	0.001	mg/L	C	U
Vanadium		NA					UNFI	0.014	mg/L	C	U	UNFI	0.010	mg/L	C	U
Zinc		NA					UNFI	0.019	mg/L	C	-	UNFI	0.122	mg/L	C	-
Volatile Organics																
1,1,1-Trichloroethane	UNFI	10.000	ug/L	C	U			NA				UNFI	10.000	ug/L	C	U
1,1,2,2-Tetrachloroethane	UNFI	10.000	ug/L	C	U			NA				UNFI	10.000	ug/L	C	U
1,1,2-Trichloroethane	UNFI	10.000	ug/L	C	U			NA				UNFI	10.000	ug/L	C	U
1,1-Dichloroethane	UNFI	10.000	ug/L	C	U			NA				UNFI	10.000	ug/L	C	UJ
1,1-Dichloroethene	UNFI	10.000	ug/L	C	U			NA				UNFI	10.000	ug/L	C	U
1,2-Dichloroethane	UNFI	10.000	ug/L	C	U			NA				UNFI	10.000	ug/L	C	U
1,2-Dichloroethene	UNFI	10.000	ug/L	C	U			NA				UNFI	10.000	ug/L	C	U
1,2-Dichloropropane	UNFI	10.000	ug/L	C	U			NA				UNFI	10.000	ug/L	C	U
2-Butanone	UNFI	10.000	ug/L	C	U			NA				UNFI	10.000	ug/L	C	UJ
2-Hexanone	UNFI	10.000	ug/L	C	U			NA				UNFI	10.000	ug/L	C	U
4-Methyl-2-pentanone	UNFI	10.000	ug/L	C	U			NA				UNFI	10.000	ug/L	C	U
Acetone	UNFI	10.000	ug/L	C	U			NA				UNFI	16.000	ug/L	C	R
Benzene	UNFI	10.000	ug/L	C	U			NA				UNFI	10.000	ug/L	C	U

0854

5174

TABLE F-11A
(Continued)

PHASE II - CHEMICAL PARAMETERS

BORING NUMBER		1046					1046					1065				
SAMPLE NUMBER		113312					116231					112013				
SAMPLING DATE		05/28/93					05/11/93					05/04/93				
CHEMICAL PARAMETERS	FLTD	RESULTS	UNITS	L	VQ		FLTD	RESULTS	UNITS	L	VQ	FLTD	RESULTS	UNITS	L	VQ
Volatile Organics																
Bromodichloromethane	UNFI	10.000	ug/L	C	U			NA				UNFI	10.000	ug/L	C	U
Bromoform	UNFI	10.000	ug/L	C	U			NA				UNFI	10.000	ug/L	C	U
Bromomethane	UNFI	10.000	ug/L	C	U			NA				UNFI	10.000	ug/L	C	U
Carbon Tetrachloride	UNFI	10.000	ug/L	C	U			NA				UNFI	10.000	ug/L	C	U
Carbon disulfide	UNFI	10.000	ug/L	C	U			NA				UNFI	10.000	ug/L	C	UJ
Chlorobenzene	UNFI	10.000	ug/L	C	U			NA				UNFI	10.000	ug/L	C	U
Chloroethane	UNFI	10.000	ug/L	C	U			NA				UNFI	10.000	ug/L	C	UJ
Chloroform	UNFI	10.000	ug/L	C	U			NA				UNFI	10.000	ug/L	C	U
Chloromethane	UNFI	10.000	ug/L	C	U			NA				UNFI	10.000	ug/L	C	R
Dibromochloromethane	UNFI	10.000	ug/L	C	U			NA				UNFI	10.000	ug/L	C	U
Ethylbenzene	UNFI	10.000	ug/L	C	U			NA				UNFI	10.000	ug/L	C	U
Methylene chloride	UNFI	10.000	ug/L	C	U			NA				UNFI	10.000	ug/L	C	UJ
Styrene	UNFI	10.000	ug/L	C	U			NA				UNFI	10.000	ug/L	C	U
Tetrachloroethene	UNFI	10.000	ug/L	C	U			NA				UNFI	10.000	ug/L	C	U
Toluene	UNFI	10.000	ug/L	C	U			NA				UNFI	10.000	ug/L	C	U
Trichloroethene	UNFI	10.000	ug/L	C	U			NA				UNFI	10.000	ug/L	C	U
Vinyl Acetate	UNFI	10.000	ug/L	C	U			NA				UNFI	10.000	ug/L	C	UJ
Vinyl chloride	UNFI	10.000	ug/L	C	U			NA				UNFI	10.000	ug/L	C	UJ
Xylenes, Total	UNFI	10.000	ug/L	C	U			NA				UNFI	10.000	ug/L	C	U
cis-1,3-Dichloropropene	UNFI	10.000	ug/L	C	U			NA				UNFI	10.000	ug/L	C	U
trans-1,3-Dichloropropene	UNFI	10.000	ug/L	C	U			NA				UNFI	10.000	ug/L	C	U
Semivolatile Organics																
1,2,4-Trichlorobenzene		NA					UNFI	10.000	ug/L	C	U	UNFI	10.000	ug/L	C	U
1,2-Dichlorobenzene		NA					UNFI	10.000	ug/L	C	U	UNFI	10.000	ug/L	C	U
1,3-Dichlorobenzene		NA					UNFI	10.000	ug/L	C	U	UNFI	10.000	ug/L	C	U
1,4-Dichlorobenzene		NA					UNFI	10.000	ug/L	C	U	UNFI	10.000	ug/L	C	U
2,4,5-Trichlorophenol		NA					UNFI	25.000	ug/L	C	U	UNFI	25.000	ug/L	C	U
2,4,6-Trichlorophenol		NA					UNFI	10.000	ug/L	C	U	UNFI	10.000	ug/L	C	U
2,4-Dichlorophenol		NA					UNFI	10.000	ug/L	C	U	UNFI	10.000	ug/L	C	U
2,4-Dimethylphenol		NA					UNFI	10.000	ug/L	C	U	UNFI	10.000	ug/L	C	U
2,4-Dinitrophenol		NA					UNFI	25.000	ug/L	C	U	UNFI	25.000	ug/L	C	R
2,4-Dinitrotoluene		NA					UNFI	10.000	ug/L	C	U	UNFI	10.000	ug/L	C	U
2,6-Dinitrotoluene		NA					UNFI	10.000	ug/L	C	U	UNFI	10.000	ug/L	C	U
2-Chloronaphthalene		NA					UNFI	10.000	ug/L	C	U	UNFI	10.000	ug/L	C	U
2-Chlorophenol		NA					UNFI	10.000	ug/L	C	U	UNFI	10.000	ug/L	C	U
2-Methylnaphthalene		NA					UNFI	10.000	ug/L	C	U	UNFI	10.000	ug/L	C	U
2-Methylphenol		NA					UNFI	10.000	ug/L	C	U	UNFI	10.000	ug/L	C	U
2-Nitroaniline		NA					UNFI	25.000	ug/L	C	U	UNFI	25.000	ug/L	C	U
2-Nitrophenol		NA					UNFI	10.000	ug/L	C	U	UNFI	10.000	ug/L	C	U
3,3'-Dichlorobenzidine		NA					UNFI	10.000	ug/L	C	U	UNFI	10.000	ug/L	C	U

TABLE F-11A
(Continued)

PHASE II - CHEMICAL PARAMETERS

BORING NUMBER		1046				1046				1065			
SAMPLE NUMBER		113312				116231				112013			
SAMPLING DATE		05/28/93				05/11/93				05/04/93			
CHEMICAL PARAMETERS	FLTD	RESULTS	UNITS	L	VQ	FLTD	RESULTS	UNITS	L	VQ	FLTD	RESULTS	UNITS	L	VQ
Semivolatile Organics															
3-Nitroaniline		NA				UNFI	25.000	ug/L	C	U	UNFI	25.000	ug/L	C	U
4,6-Dinitro-2-methylphenol		NA				UNFI	25.000	ug/L	C	R	UNFI	25.000	ug/L	C	UJ
4-Bromophenyl phenyl ether		NA				UNFI	10.000	ug/L	C	U	UNFI	10.000	ug/L	C	U
4-Chloro-3-methylphenol		NA				UNFI	10.000	ug/L	C	U	UNFI	10.000	ug/L	C	U
4-Chlorophenylphenyl ether		NA				UNFI	10.000	ug/L	C	U	UNFI	10.000	ug/L	C	U
4-Methylphenol		NA				UNFI	10.000	ug/L	C	U	UNFI	10.000	ug/L	C	U
4-Nitroaniline		NA				UNFI	25.000	ug/L	C	R	UNFI	25.000	ug/L	C	U
4-Nitrophenol		NA				UNFI	25.000	ug/L	C	U	UNFI	25.000	ug/L	C	UJ
Acenaphthene		NA				UNFI	10.000	ug/L	C	U	UNFI	10.000	ug/L	C	U
Acenaphthylene		NA				UNFI	10.000	ug/L	C	U	UNFI	10.000	ug/L	C	U
Anthracene		NA				UNFI	10.000	ug/L	C	U	UNFI	10.000	ug/L	C	U
Benzo(a)anthracene		NA				UNFI	10.000	ug/L	C	U	UNFI	10.000	ug/L	C	U
Benzo(a)pyrene		NA				UNFI	10.000	ug/L	C	U	UNFI	10.000	ug/L	C	U
Benzo(b)fluoranthene		NA				UNFI	10.000	ug/L	C	U	UNFI	10.000	ug/L	C	U
Benzo(g,h,i)perylene		NA				UNFI	10.000	ug/L	C	U	UNFI	10.000	ug/L	C	U
Benzo(k)fluoranthene		NA				UNFI	10.000	ug/L	C	U	UNFI	10.000	ug/L	C	U
Benzoic acid		NA				UNFI	50.000	ug/L	C	U	UNFI	50.000	ug/L	C	R
Benzyl alcohol		NA				UNFI	10.000	ug/L	C	U	UNFI	10.000	ug/L	C	UJ
Butyl benzyl phthalate		NA				UNFI	10.000	ug/L	C	U	UNFI	10.000	ug/L	C	U
Carbazole		NA				UNFI	10.000	ug/L	C	U	UNFI	10.000	ug/L	C	U
Chrysene		NA				UNFI	10.000	ug/L	C	U	UNFI	10.000	ug/L	C	U
Di-n-butyl phthalate		NA				UNFI	4.000	ug/L	C	J	UNFI	10.000	ug/L	C	U
Di-n-octyl phthalate		NA				UNFI	10.000	ug/L	C	U	UNFI	10.000	ug/L	C	R
Dibenzo(a,h)anthracene		NA				UNFI	10.000	ug/L	C	U	UNFI	10.000	ug/L	C	UJ
Dibenzofuran		NA				UNFI	10.000	ug/L	C	U	UNFI	10.000	ug/L	C	U
Diethyl phthalate		NA				UNFI	10.000	ug/L	C	U	UNFI	10.000	ug/L	C	U
Dimethyl phthalate		NA				UNFI	10.000	ug/L	C	U	UNFI	10.000	ug/L	C	U
Fluoranthene		NA				UNFI	10.000	ug/L	C	U	UNFI	10.000	ug/L	C	U
Fluorene		NA				UNFI	10.000	ug/L	C	U	UNFI	10.000	ug/L	C	U
Hexachlorobenzene		NA				UNFI	10.000	ug/L	C	U	UNFI	10.000	ug/L	C	U
Hexachlorobutadiene		NA				UNFI	10.000	ug/L	C	U	UNFI	10.000	ug/L	C	U
Hexachlorocyclopentadiene		NA				UNFI	10.000	ug/L	C	U	UNFI	10.000	ug/L	C	U
Hexachloroethane		NA				UNFI	10.000	ug/L	C	U	UNFI	10.000	ug/L	C	U
Indeno(1,2,3-cd)pyrene		NA				UNFI	10.000	ug/L	C	U	UNFI	10.000	ug/L	C	U
Isophorone		NA				UNFI	10.000	ug/L	C	U	UNFI	10.000	ug/L	C	U
N-Nitroso-di-n-propylamine		NA				UNFI	10.000	ug/L	C	U	UNFI	10.000	ug/L	C	U
N-Nitrosodiphenylamine		NA				UNFI	10.000	ug/L	C	U	UNFI	10.000	ug/L	C	U
Naphthalene		NA				UNFI	10.000	ug/L	C	U	UNFI	10.000	ug/L	C	U
Nitrobenzene		NA				UNFI	10.000	ug/L	C	U	UNFI	10.000	ug/L	C	U
Pentachlorophenol		NA				UNFI	25.000	ug/L	C	U	UNFI	25.000	ug/L	C	U
Phenanthrene		NA				UNFI	10.000	ug/L	C	U	UNFI	10.000	ug/L	C	U
Phenol		NA				UNFI	10.000	ug/L	C	U	UNFI	10.000	ug/L	C	U

0356

5174

TABLE F-11A
(Continued)

PHASE II - CHEMICAL PARAMETERS

BORING NUMBER		1046				1046				1065			
SAMPLE NUMBER		113312				116231				112013			
SAMPLING DATE		05/28/93				05/11/93				05/04/93			
CHEMICAL PARAMETERS	FLTD	RESULTS	UNITS	L	VQ	FLTD	RESULTS	UNITS	L	VQ	FLTD	RESULTS	UNITS	L	VQ
Semivolatile Organics															
Pyrene		NA				UNFI	10.000	ug/L	C	U	UNFI	10.000	ug/L	C	U
bis(2-Chloroethoxy)methane		NA				UNFI	10.000	ug/L	C	U	UNFI	10.000	ug/L	C	U
bis(2-Chloroethyl)ether		NA				UNFI	10.000	ug/L	C	U	UNFI	10.000	ug/L	C	U
bis(2-Chloroisopropyl) ether		NA				UNFI	10.000	ug/L	C	UJ	UNFI	10.000	ug/L	C	U
bis(2-Ethylhexyl) phthalate		NA				UNFI	10.000	ug/L	C	U	UNFI	10.000	ug/L	C	UJ
p-Chloroaniline		NA				UNFI	10.000	ug/L	C	U	UNFI	10.000	ug/L	C	U
Pesticide Organics/PCBs															
4,4'-DDD		NA				UNFI	0.100	ug/L	C	U	UNFI	0.100	ug/L	C	U
4,4'-DDE		NA				UNFI	0.100	ug/L	C	U	UNFI	0.100	ug/L	C	U
4,4'-DDT		NA				UNFI	0.100	ug/L	C	U	UNFI	0.100	ug/L	C	UJ
Aldrin		NA				UNFI	0.050	ug/L	C	U	UNFI	0.050	ug/L	C	U
Aroclor-1016		NA				UNFI	1.000	ug/L	C	U	UNFI	1.000	ug/L	C	U
Aroclor-1221		NA				UNFI	2.000	ug/L	C	U	UNFI	2.000	ug/L	C	U
Aroclor-1232		NA				UNFI	1.000	ug/L	C	U	UNFI	1.000	ug/L	C	U
Aroclor-1242		NA				UNFI	1.000	ug/L	C	U	UNFI	1.000	ug/L	C	U
Aroclor-1248		NA				UNFI	1.000	ug/L	C	U	UNFI	1.000	ug/L	C	U
Aroclor-1254		NA				UNFI	1.000	ug/L	C	U	UNFI	1.000	ug/L	C	U
Aroclor-1260		NA				UNFI	1.000	ug/L	C	U	UNFI	1.000	ug/L	C	U
Dieldrin		NA				UNFI	0.100	ug/L	C	U	UNFI	0.100	ug/L	C	U
Endosulfan II		NA				UNFI	0.100	ug/L	C	U	UNFI	0.100	ug/L	C	U
Endosulfan sulfate		NA				UNFI	0.100	ug/L	C	U	UNFI	0.100	ug/L	C	U
Endosulfan-I		NA				UNFI	0.050	ug/L	C	U	UNFI	0.050	ug/L	C	U
Endrin		NA				UNFI	0.100	ug/L	C	U	UNFI	0.100	ug/L	C	U
Endrin aldehyde		NA				UNFI	0.100	ug/L	C	U	UNFI	0.100	ug/L	C	U
Endrin ketone		NA				UNFI	0.100	ug/L	C	U	UNFI	0.100	ug/L	C	U
Heptachlor		NA				UNFI	0.050	ug/L	C	U	UNFI	0.050	ug/L	C	U
Heptachlor epoxide		NA				UNFI	0.050	ug/L	C	U	UNFI	0.050	ug/L	C	U
Methoxychlor		NA				UNFI	0.500	ug/L	C	U	UNFI	0.500	ug/L	C	U
Toxaphene		NA				UNFI	5.000	ug/L	C	U	UNFI	5.000	ug/L	C	U
alpha-BHC		NA				UNFI	0.050	ug/L	C	U	UNFI	0.050	ug/L	C	UJ
alpha-Chlordane		NA				UNFI	0.050	ug/L	C	U	UNFI	0.050	ug/L	C	U
beta-BHC		NA				UNFI	0.050	ug/L	C	U	UNFI	0.050	ug/L	C	U
delta-BHC		NA				UNFI	0.050	ug/L	C	U	UNFI	0.050	ug/L	C	UJ
gamma-BHC (Lindane)		NA				UNFI	0.050	ug/L	C	U	UNFI	0.050	ug/L	C	UJ
gamma-Chlordane		NA				UNFI	0.050	ug/L	C	U	UNFI	0.050	ug/L	C	U
General Chemistry															
Alkalinity		NA				UNFI	349.000	mg/L	B	-	UNFI	360.000	mg/L	B	-
Ammonia	UNFI	0.100	mg/L	C	U		NA				UNFI	0.100	mg/L	B	U

TABLE F-11A
(Continued)

PHASE II - CHEMICAL PARAMETERS

BORING NUMBER		1046					1046					1065			
SAMPLE NUMBER		113312					116231					112013			
SAMPLING DATE		05/28/93					05/11/93					05/04/93			
CHEMICAL PARAMETERS	FLTD	RESULTS	UNITS	L	VQ	FLTD	RESULTS	UNITS	L	VQ	FLTD	RESULTS	UNITS	L	VQ
General Chemistry															
Chloride		NA				UNFI	2.500	mg/L	B	-	UNFI	2.770	mg/L	B	-
Fluoride		NA				UNFI	0.290	mg/L	B	-	UNFI	0.230	mg/L	B	-
Nitrate		NA				UNFI	0.340	mg/L	B	J	UNFI	0.100	mg/L	B	R
Phenols		NA				UNFI	0.010	mg/L	B	U	UNFI	0.010	mg/L	B	U
Sulfate		NA				UNFI	57.720	mg/L	B	-	UNFI	71.700	mg/L	B	-
Sulfide		NA				UNFI	0.500	mg/L	B	U	UNFI	0.500	mg/L	B	U
Total Kjeldahl Nitrogen		NA					NA				UNFI	0.340	mg/L	B	-
Total Organic Carbon	UNFI	1.100	mg/L	C	-		NA				UNFI	1.150	mg/L	B	-
Total Organic Halides		NA				UNFI	0.010	mg/L	B	U	UNFI	0.011	mg/L	B	UJ
Total Organic Nitrogen	UNFI	0.190	mg/L	C	-		NA				UNFI	0.340	mg/L	B	-
Total Phosphorous	UNFI	0.130	mg/L	C	UJ	UNFI	0.120	mg/L	B	-	UNFI	0.080	mg/L	B	-

0858

TABLE F-11A
(Continued)

PHASE II - CHEMICAL PARAMETERS

BORING NUMBER		1065				11032				11085			
SAMPLE NUMBER		112014				113869				113792			
SAMPLING DATE		05/04/93				06/30/93				06/16/93			
CHEMICAL PARAMETERS	FLTD	RESULTS	UNITS	L	VQ	FLTD	RESULTS	UNITS	L	VQ	FLTD	RESULTS	UNITS	L	VQ
Inorganics															
Aluminum	FILT	0.069	mg/L	C	U	FILT	0.435	mg/L	C	-	FILT	0.196	mg/L	C	U
Aluminum	NA					UNFI	130.000	mg/L	C	-	UNFI	184.000	mg/L	C	-
Antimony	FILT	0.014	mg/L	C	J	FILT	0.006	mg/L	C	J	FILT	0.007	mg/L	C	-
Antimony	NA					UNFI	0.005	mg/L	C	U	UNFI	0.005	mg/L	C	U
Arsenic	FILT	0.001	mg/L	C	U	FILT	0.002	mg/L	C	UJ	FILT	0.002	mg/L	C	U
Arsenic	NA					UNFI	0.008	mg/L	C	-	UNFI	0.007	mg/L	C	J
Barium	FILT	0.047	mg/L	C	-	FILT	0.088	mg/L	C	-	FILT	0.078	mg/L	C	-
Barium	NA					UNFI	1.050	mg/L	C	-	UNFI	1.140	mg/L	C	-
Beryllium	FILT	0.001	mg/L	C	U	FILT	0.002	mg/L	C	U	FILT	0.002	mg/L	C	U
Beryllium	NA					UNFI	0.006	mg/L	C	-	UNFI	0.010	mg/L	C	-
Cadmium	FILT	0.002	mg/L	C	U	FILT	0.005	mg/L	C	UJ	FILT	0.005	mg/L	C	U
Cadmium	NA					UNFI	0.006	mg/L	C	J	UNFI	0.005	mg/L	C	U
Calcium	FILT	108.000	mg/L	C	-	FILT	87.300	mg/L	C	-	FILT	109.000	mg/L	C	-
Calcium	NA					UNFI	1360.000	mg/L	C	-	UNFI	1190.000	mg/L	C	-
Chromium	FILT	0.004	mg/L	C	U	FILT	0.010	mg/L	C	R	FILT	0.010	mg/L	C	U
Chromium	NA					UNFI	0.167	mg/L	C	J	UNFI	0.196	mg/L	C	-
Cobalt	FILT	0.003	mg/L	C	U	FILT	0.010	mg/L	C	U	FILT	0.010	mg/L	C	U
Cobalt	NA					UNFI	0.069	mg/L	C	-	UNFI	0.116	mg/L	C	-
Copper	FILT	0.009	mg/L	C	U	FILT	0.010	mg/L	C	U	FILT	0.010	mg/L	C	U
Copper	NA					UNFI	0.246	mg/L	C	-	UNFI	0.332	mg/L	C	-
Cyanide	UNFI	0.001	mg/L	C	R	UNFI	0.002	mg/L	C	U		NA			
Iron	FILT	0.091	mg/L	C	U	FILT	0.334	mg/L	C	-	FILT	0.025	mg/L	C	-
Iron	NA					UNFI	265.000	mg/L	C	-	UNFI	370.000	mg/L	C	-
Lead	FILT	0.001	mg/L	C	U	FILT	0.002	mg/L	C	U	FILT	0.002	mg/L	C	U
Lead	NA					UNFI	0.083	mg/L	C	-	UNFI	0.099	mg/L	C	-
Magnesium	FILT	37.900	mg/L	C	-	FILT	57.400	mg/L	C	-	FILT	42.100	mg/L	C	-
Magnesium	NA					UNFI	413.000	mg/L	C	-	UNFI	384.000	mg/L	C	-
Manganese	FILT	0.004	mg/L	C	U	FILT	0.274	mg/L	C	-	FILT	0.016	mg/L	C	-
Manganese	NA					UNFI	4.920	mg/L	C	-	UNFI	6.490	mg/L	C	-
Mercury	FILT	0.000	mg/L	C	U	FILT	0.000	mg/L	C	U	FILT	0.000	mg/L	C	U
Mercury	NA					UNFI	0.000	mg/L	C	-	UNFI	0.000	mg/L	C	-
Molybdenum	FILT	0.003	mg/L	C	U	FILT	0.020	mg/L	C	U	FILT	0.010	mg/L	C	U
Molybdenum	NA					UNFI	0.049	mg/L	C	-	UNFI	0.108	mg/L	C	-
Nickel	FILT	0.003	mg/L	C	U	FILT	0.020	mg/L	C	U	FILT	0.020	mg/L	C	U
Nickel	NA					UNFI	0.243	mg/L	C	-	UNFI	0.339	mg/L	C	-
Potassium	FILT	0.632	mg/L	C	U	FILT	1.330	mg/L	C	-	FILT	1.180	mg/L	C	-
Potassium	NA					UNFI	21.300	mg/L	C	-	UNFI	27.400	mg/L	C	-
Selenium	FILT	0.001	mg/L	C	U	FILT	0.002	mg/L	C	UJ	FILT	0.002	mg/L	C	U
Selenium	NA					UNFI	0.002	mg/L	C	UJ	UNFI	0.010	mg/L	C	U
Silicon	FILT	5.670	mg/L	C	-	FILT	8.200	mg/L	C	-	FILT	7.450	mg/L	C	-
Silicon	NA					UNFI	83.400	mg/L	C	-	UNFI	78.600	mg/L	C	-
Silver	FILT	0.002	mg/L	C	U	FILT	0.010	mg/L	C	U	FILT	0.010	mg/L	C	U

0859

TABLE F-11A
(Continued)

PHASE II - CHEMICAL PARAMETERS

BORING NUMBER		1065					11032					11085				
SAMPLE NUMBER		112014					113869					113792				
SAMPLING DATE		05/04/93					06/30/93					06/16/93				
CHEMICAL PARAMETERS	FLTD	RESULTS	UNITS	L	VQ		FLTD	RESULTS	UNITS	L	VQ	FLTD	RESULTS	UNITS	L	VQ
Inorganics																
Silver		NA					UNFI	0.061	mg/L	C	-	UNFI	0.089	mg/L	C	-
Sodium	FILT	8.040	mg/L	C	-		FILT	12.500	mg/L	C	-	FILT	16.600	mg/L	C	J
Sodium		NA					UNFI	12.800	mg/L	C	-	UNFI	12.800	mg/L	C	-
Thallium	FILT	0.001	mg/L	C	U		FILT	0.002	mg/L	C	UJ	FILT	0.002	mg/L	C	U
Thallium		NA					UNFI	0.002	mg/L	C	UJ	UNFI	0.002	mg/L	C	U
Vanadium	FILT	0.007	mg/L	C	U		FILT	0.010	mg/L	C	R	FILT	0.010	mg/L	C	U
Vanadium		NA					UNFI	0.319	mg/L	C	J	UNFI	0.376	mg/L	C	-
Zinc	FILT	0.037	mg/L	C	-		FILT	0.005	mg/L	C	U	FILT	0.005	mg/L	C	U
Zinc		NA					UNFI	0.654	mg/L	C	-	UNFI	0.940	mg/L	C	-
Volatile Organics																
1,1,1-Trichloroethane		NA					UNFI	10.000	ug/L	C	U	UNFI	10.000	ug/L	C	U
1,1,2,2-Tetrachloroethane		NA					UNFI	10.000	ug/L	C	U	UNFI	10.000	ug/L	C	U
1,1,2-Trichloroethane		NA					UNFI	10.000	ug/L	C	U	UNFI	10.000	ug/L	C	U
1,1-Dichloroethane		NA					UNFI	10.000	ug/L	C	U	UNFI	10.000	ug/L	C	U
1,1-Dichloroethene		NA					UNFI	10.000	ug/L	C	U	UNFI	10.000	ug/L	C	U
1,2-Dichloroethane		NA					UNFI	10.000	ug/L	C	U	UNFI	10.000	ug/L	C	U
1,2-Dichloroethene		NA					UNFI	10.000	ug/L	C	U	UNFI	10.000	ug/L	C	U
1,2-Dichloropropane		NA					UNFI	10.000	ug/L	C	U	UNFI	10.000	ug/L	C	U
2-Butanone		NA					UNFI	10.000	ug/L	C	U	UNFI	10.000	ug/L	C	UJ
2-Hexanone		NA					UNFI	10.000	ug/L	C	U	UNFI	10.000	ug/L	C	R
4-Methyl-2-pentanone		NA					UNFI	10.000	ug/L	C	U	UNFI	10.000	ug/L	C	R
Acetone		NA					UNFI	6.000	ug/L	C	J	UNFI	10.000	ug/L	C	R
Benzene		NA					UNFI	10.000	ug/L	C	U	UNFI	10.000	ug/L	C	U
Bromodichloromethane		NA					UNFI	10.000	ug/L	C	U	UNFI	10.000	ug/L	C	U
Bromoform		NA					UNFI	10.000	ug/L	C	U	UNFI	10.000	ug/L	C	U
Bromomethane		NA					UNFI	10.000	ug/L	C	U	UNFI	10.000	ug/L	C	U
Carbon Tetrachloride		NA					UNFI	10.000	ug/L	C	U	UNFI	10.000	ug/L	C	U
Carbon disulfide		NA					UNFI	10.000	ug/L	C	U	UNFI	10.000	ug/L	C	R
Chlorobenzene		NA					UNFI	10.000	ug/L	C	U	UNFI	10.000	ug/L	C	U
Chloroethane		NA					UNFI	10.000	ug/L	C	U	UNFI	10.000	ug/L	C	UJ
Chloroform		NA					UNFI	10.000	ug/L	C	U	UNFI	10.000	ug/L	C	U
Chloromethane		NA					UNFI	10.000	ug/L	C	U	UNFI	10.000	ug/L	C	U
Dibromochloromethane		NA					UNFI	10.000	ug/L	C	U	UNFI	10.000	ug/L	C	U
Ethylbenzene		NA					UNFI	10.000	ug/L	C	U	UNFI	10.000	ug/L	C	U
Methylene chloride		NA					UNFI	10.000	ug/L	C	UJ	UNFI	10.000	ug/L	C	UJ
Styrene		NA					UNFI	10.000	ug/L	C	U	UNFI	10.000	ug/L	C	U
Tetrachloroethene		NA					UNFI	10.000	ug/L	C	U	UNFI	10.000	ug/L	C	U
Toluene		NA					UNFI	10.000	ug/L	C	U	UNFI	10.000	ug/L	C	U
Trichloroethene		NA					UNFI	10.000	ug/L	C	U	UNFI	10.000	ug/L	C	U
Vinyl chloride		NA					UNFI	10.000	ug/L	C	U	UNFI	10.000	ug/L	C	U

0860

5174

TABLE F-11A
(Continued)

PHASE II - CHEMICAL PARAMETERS

BORING NUMBER	1065					11032					11085				
SAMPLE NUMBER	112014					113869					113792				
SAMPLING DATE	05/04/93					06/30/93					06/16/93				
CHEMICAL PARAMETERS	FLTD	RESULTS	UNITS	L	VQ	FLTD	RESULTS	UNITS	L	VQ	FLTD	RESULTS	UNITS	L	VQ
Volatile Organics															
Xylenes, Total		NA				UNFI	10.000	ug/L	C	U	UNFI	10.000	ug/L	C	U
cis-1,3-Dichloropropene		NA				UNFI	10.000	ug/L	C	U	UNFI	10.000	ug/L	C	U
trans-1,3-Dichloropropene		NA				UNFI	10.000	ug/L	C	U	UNFI	10.000	ug/L	C	U
Semivolatile Organics															
1,2,4-Trichlorobenzene		NA				UNFI	10.000	ug/L	C	U	UNFI	10.000	ug/L	C	U
1,2-Dichlorobenzene		NA				UNFI	10.000	ug/L	C	U	UNFI	10.000	ug/L	C	U
1,3-Dichlorobenzene		NA				UNFI	10.000	ug/L	C	U	UNFI	10.000	ug/L	C	U
1,4-Dichlorobenzene		NA				UNFI	10.000	ug/L	C	U	UNFI	10.000	ug/L	C	U
2,4,5-Trichlorophenol		NA				UNFI	25.000	ug/L	C	U	UNFI	25.000	ug/L	C	U
2,4,6-Trichlorophenol		NA				UNFI	10.000	ug/L	C	U	UNFI	10.000	ug/L	C	U
2,4-Dichlorophenol		NA				UNFI	10.000	ug/L	C	U	UNFI	10.000	ug/L	C	U
2,4-Dimethylphenol		NA				UNFI	10.000	ug/L	C	U	UNFI	10.000	ug/L	C	U
2,4-Dinitrophenol		NA				UNFI	25.000	ug/L	C	UJ	UNFI	25.000	ug/L	C	R
2,4-Dinitrotoluene		NA				UNFI	10.000	ug/L	C	U	UNFI	10.000	ug/L	C	U
2,6-Dinitrotoluene		NA				UNFI	10.000	ug/L	C	U	UNFI	10.000	ug/L	C	U
2-Benzyl-4-chlorophenol		NA				UNFI	10.000	ug/L	C	U	UNFI	10.000	ug/L	C	U
2-Chloronaphthalene		NA				UNFI	10.000	ug/L	C	U	UNFI	10.000	ug/L	C	U
2-Chlorophenol		NA				UNFI	10.000	ug/L	C	U	UNFI	10.000	ug/L	C	U
2-Methylnaphthalene		NA				UNFI	10.000	ug/L	C	U	UNFI	10.000	ug/L	C	U
2-Methylphenol		NA				UNFI	10.000	ug/L	C	U	UNFI	10.000	ug/L	C	U
2-Nitroaniline		NA				UNFI	25.000	ug/L	C	U	UNFI	25.000	ug/L	C	U
2-Nitrophenol		NA				UNFI	10.000	ug/L	C	U	UNFI	10.000	ug/L	C	U
3,3'-Dichlorobenzidine		NA				UNFI	10.000	ug/L	C	U	UNFI	10.000	ug/L	C	U
3-Nitroaniline		NA				UNFI	25.000	ug/L	C	U	UNFI	25.000	ug/L	C	U
4,6-Dinitro-2-methylphenol		NA				UNFI	25.000	ug/L	C	U	UNFI	25.000	ug/L	C	U
4-Bromophenyl phenyl ether		NA				UNFI	10.000	ug/L	C	U	UNFI	10.000	ug/L	C	U
4-Chloro-3-methylphenol		NA				UNFI	10.000	ug/L	C	U	UNFI	10.000	ug/L	C	U
4-Chlorophenylphenyl ether		NA				UNFI	10.000	ug/L	C	U	UNFI	10.000	ug/L	C	U
4-Methylphenol		NA				UNFI	10.000	ug/L	C	U	UNFI	10.000	ug/L	C	U
4-Nitroaniline		NA				UNFI	25.000	ug/L	C	U	UNFI	25.000	ug/L	C	U
4-Nitrophenol		NA				UNFI	25.000	ug/L	C	U	UNFI	25.000	ug/L	C	U
Acenaphthene		NA				UNFI	10.000	ug/L	C	U	UNFI	10.000	ug/L	C	U
Acenaphthylene		NA				UNFI	10.000	ug/L	C	U	UNFI	10.000	ug/L	C	U
Anthracene		NA				UNFI	10.000	ug/L	C	U	UNFI	10.000	ug/L	C	U
Benzo(a)anthracene		NA				UNFI	10.000	ug/L	C	U	UNFI	10.000	ug/L	C	U
Benzo(a)pyrene		NA				UNFI	10.000	ug/L	C	U	UNFI	10.000	ug/L	C	U
Benzo(b)fluoranthene		NA				UNFI	10.000	ug/L	C	U	UNFI	10.000	ug/L	C	U
Benzo(g,h,i)perylene		NA				UNFI	10.000	ug/L	C	U	UNFI	10.000	ug/L	C	U
Benzo(k)fluoranthene		NA				UNFI	10.000	ug/L	C	U	UNFI	10.000	ug/L	C	U
Benzoic acid		NA				UNFI	50.000	ug/L	C	U	UNFI	50.000	ug/L	C	U

TABLE F-11A
(Continued)

PHASE II - CHEMICAL PARAMETERS

BORING NUMBER		1065				11032				11085			
SAMPLE NUMBER		112014				113869				113792			
SAMPLING DATE		05/04/93				06/30/93				06/16/93			
CHEMICAL PARAMETERS	FLTD	RESULTS	UNITS	L	VQ	FLTD	RESULTS	UNITS	L	VQ	FLTD	RESULTS	UNITS	L	VQ
Semivolatile Organics															
Benzyl alcohol		NA				UNFI	10.000	ug/L	C	U	UNFI	10.000	ug/L	C	U
Butyl benzyl phthalate		NA				UNFI	10.000	ug/L	C	U	UNFI	10.000	ug/L	C	U
Carbazole		NA				UNFI	10.000	ug/L	C	U	UNFI	10.000	ug/L	C	U
Chrysene		NA				UNFI	10.000	ug/L	C	U	UNFI	10.000	ug/L	C	U
Di-n-butyl phthalate		NA				UNFI	10.000	ug/L	C	U	UNFI	10.000	ug/L	C	U
Di-n-octyl phthalate		NA				UNFI	10.000	ug/L	C	U	UNFI	10.000	ug/L	C	U
Dibenzo(a,h)anthracene		NA				UNFI	10.000	ug/L	C	U	UNFI	10.000	ug/L	C	U
Dibenzofuran		NA				UNFI	10.000	ug/L	C	U	UNFI	10.000	ug/L	C	U
Diethyl phthalate		NA				UNFI	1.000	ug/L	C	J	UNFI	10.000	ug/L	C	U
Dimethyl phthalate		NA				UNFI	10.000	ug/L	C	U	UNFI	10.000	ug/L	C	U
Fluoranthene		NA				UNFI	10.000	ug/L	C	U	UNFI	10.000	ug/L	C	U
Fluorene		NA				UNFI	10.000	ug/L	C	U	UNFI	10.000	ug/L	C	U
Hexachlorobenzene		NA				UNFI	10.000	ug/L	C	U	UNFI	10.000	ug/L	C	U
Hexachlorobutadiene		NA				UNFI	10.000	ug/L	C	U	UNFI	10.000	ug/L	C	U
Hexachlorocyclopentadiene		NA				UNFI	10.000	ug/L	C	UJ	UNFI	10.000	ug/L	C	U
Hexachloroethane		NA				UNFI	10.000	ug/L	C	U	UNFI	10.000	ug/L	C	U
Indeno(1,2,3-cd)pyrene		NA				UNFI	10.000	ug/L	C	U	UNFI	10.000	ug/L	C	UJ
Isophorone		NA				UNFI	10.000	ug/L	C	U	UNFI	10.000	ug/L	C	U
N-Nitroso-di-n-propylamine		NA				UNFI	10.000	ug/L	C	U	UNFI	10.000	ug/L	C	U
N-Nitrosodimethylamine		NA				UNFI	10.000	ug/L	C	U	UNFI	10.000	ug/L	C	U
N-Nitrosodiphenylamine		NA				UNFI	10.000	ug/L	C	U	UNFI	10.000	ug/L	C	U
Naphthalene		NA				UNFI	10.000	ug/L	C	U	UNFI	10.000	ug/L	C	U
Nitrobenzene		NA				UNFI	10.000	ug/L	C	U	UNFI	10.000	ug/L	C	U
Pentachlorophenol		NA				UNFI	25.000	ug/L	C	U	UNFI	25.000	ug/L	C	U
Phenanthrene		NA				UNFI	10.000	ug/L	C	U	UNFI	10.000	ug/L	C	U
Phenol		NA				UNFI	10.000	ug/L	C	U	UNFI	10.000	ug/L	C	U
Pyrene		NA				UNFI	10.000	ug/L	C	U	UNFI	10.000	ug/L	C	U
Tributyl phosphate		NA				UNFI	1.000	ug/L	C	J	UNFI	10.000	ug/L	C	U
bis(2-Chloroethoxy)methane		NA				UNFI	10.000	ug/L	C	U	UNFI	10.000	ug/L	C	U
bis(2-Chloroethyl)ether		NA				UNFI	10.000	ug/L	C	U	UNFI	10.000	ug/L	C	U
bis(2-Chloroisopropyl) ether		NA				UNFI	10.000	ug/L	C	U	UNFI	10.000	ug/L	C	U
bis(2-Ethylhexyl) phthalate		NA				UNFI	10.000	ug/L	C	U	UNFI	10.000	ug/L	C	U
p-Chloroaniline		NA				UNFI	10.000	ug/L	C	U	UNFI	10.000	ug/L	C	U
Pesticide Organics/PCBs															
4,4'-DDD		NA				UNFI	0.100	ug/L	C	U	UNFI	0.100	ug/L	C	U
4,4'-DDE		NA				UNFI	0.100	ug/L	C	U	UNFI	0.100	ug/L	C	U
4,4'-DDT		NA				UNFI	0.100	ug/L	C	U	UNFI	0.100	ug/L	C	U
Aldrin		NA				UNFI	0.050	ug/L	C	U	UNFI	0.050	ug/L	C	U
Aroclor-1016		NA				UNFI	1.000	ug/L	C	U	UNFI	1.000	ug/L	C	U
Aroclor-1221		NA				UNFI	2.000	ug/L	C	U	UNFI	2.000	ug/L	C	U

TABLE F-11A
(Continued)

PHASE II - CHEMICAL PARAMETERS

BORING NUMBER		1065				11032				11085			
SAMPLE NUMBER		112014				113869				113792			
SAMPLING DATE		05/04/93				06/30/93				06/16/93			
CHEMICAL PARAMETERS	FLTD	RESULTS	UNITS	L	VQ	FLTD	RESULTS	UNITS	L	VQ	FLTD	RESULTS	UNITS	L	VQ
Pesticide Organics/PCBs															
Aroclor-1232		NA				UNFI	1.000	ug/L	C	U	UNFI	1.000	ug/L	C	U
Aroclor-1242		NA				UNFI	1.000	ug/L	C	U	UNFI	1.000	ug/L	C	U
Aroclor-1248		NA				UNFI	1.000	ug/L	C	U	UNFI	1.000	ug/L	C	U
Aroclor-1254		NA				UNFI	1.000	ug/L	C	U	UNFI	1.000	ug/L	C	U
Aroclor-1260		NA				UNFI	1.000	ug/L	C	U	UNFI	1.000	ug/L	C	U
Dieldrin		NA				UNFI	0.100	ug/L	C	U	UNFI	0.100	ug/L	C	U
Endosulfan II		NA				UNFI	0.100	ug/L	C	U	UNFI	0.100	ug/L	C	U
Endosulfan sulfate		NA				UNFI	0.100	ug/L	C	U	UNFI	0.100	ug/L	C	U
Endosulfan-I		NA				UNFI	0.050	ug/L	C	U	UNFI	0.050	ug/L	C	U
Endrin		NA				UNFI	0.100	ug/L	C	U	UNFI	0.100	ug/L	C	U
Endrin aldehyde		NA				UNFI	0.100	ug/L	C	U	UNFI	0.100	ug/L	C	U
Endrin ketone		NA				UNFI	0.100	ug/L	C	U	UNFI	0.100	ug/L	C	U
Heptachlor		NA				UNFI	0.050	ug/L	C	U	UNFI	0.050	ug/L	C	U
Heptachlor epoxide		NA				UNFI	0.050	ug/L	C	U	UNFI	0.050	ug/L	C	U
Methoxychlor		NA				UNFI	0.500	ug/L	C	U	UNFI	0.500	ug/L	C	U
Toxaphene		NA				UNFI	5.000	ug/L	C	U	UNFI	5.000	ug/L	C	U
alpha-BHC		NA				UNFI	0.050	ug/L	C	U	UNFI	0.050	ug/L	C	U
alpha-Chlordane		NA				UNFI	0.050	ug/L	C	U	UNFI	0.050	ug/L	C	U
beta-BHC		NA				UNFI	0.050	ug/L	C	U	UNFI	0.050	ug/L	C	U
delta-BHC		NA				UNFI	0.050	ug/L	C	U	UNFI	0.050	ug/L	C	U
gamma-BHC (Lindane)		NA				UNFI	0.050	ug/L	C	U	UNFI	0.050	ug/L	C	U
gamma-Chlordane		NA				UNFI	0.050	ug/L	C	U	UNFI	0.050	ug/L	C	U
General Chemistry															
Alkalinity		NA				UNFI	394.000	mg/L	B	-	UNFI	380.500	mg/L	B	-
Ammonia		NA				UNFI	0.260	mg/L	B	J	UNFI	0.110	mg/L	B	-
Chloride		NA				UNFI	8.890	mg/L	B	-	UNFI	6.780	mg/L	B	-
Fluoride		NA				UNFI	0.640	mg/L	B	-	UNFI	0.430	mg/L	B	-
Nitrate		NA				UNFI	0.260	mg/L	B	J	UNFI	0.520	mg/L	B	J
Phenols		NA				UNFI	0.010	mg/L	B	U	UNFI	0.010	mg/L	B	U
Sulfate		NA				UNFI	65.500	mg/L	B	-	UNFI	85.600	mg/L	B	-
Sulfide		NA				UNFI	0.500	mg/L	B	U	UNFI	0.500	mg/L	B	U
Total Kjeldahl Nitrogen		NA				UNFI	3.320	mg/L	B	-	UNFI	4.610	mg/L	B	-
Total Organic Carbon		NA				UNFI	1.790	mg/L	B	J	UNFI	1.300	mg/L	B	-
Total Organic Halides		NA				UNFI	0.010	mg/L	B	U	UNFI	0.021	mg/L	B	-
Total Organic Nitrogen		NA				UNFI	3.060	mg/L	B	J	UNFI	4.500	mg/L	B	-
Total Phosphorous		NA				UNFI	8.760	mg/L	B	-	UNFI	12.110	mg/L	B	-

0363

TABLE F-11A
(Continued)

PHASE II - CHEMICAL PARAMETERS

BORING NUMBER		1941				1941				1942			
SAMPLE NUMBER		112997				113316				113000			
SAMPLING DATE		04/30/93				05/28/93				05/01/93			
CHEMICAL PARAMETERS	FLTD	RESULTS	UNITS	L	VQ	FLTD	RESULTS	UNITS	L	VQ	FLTD	RESULTS	UNITS	L	VQ
Inorganics															
Aluminum	UNFI	0.069	mg/L	C	-	UNFI	86.100	mg/L	C	-	UNFI	0.084	mg/L	D	-
Antimony	UNFI	0.013	mg/L	C	J	UNFI	0.006	mg/L	C	J	UNFI	0.006	mg/L	D	UJ
Arsenic	UNFI	0.001	mg/L	C	U	UNFI	0.005	mg/L	C	J	UNFI	0.001	mg/L	D	U
Barium	UNFI	0.072	mg/L	C	J	UNFI	0.565	mg/L	C	-	UNFI	0.090	mg/L	D	J
Beryllium	UNFI	0.002	mg/L	C	U	UNFI	0.004	mg/L	C	-	UNFI	0.002	mg/L	D	U
Cadmium	UNFI	0.002	mg/L	C	U	UNFI	0.005	mg/L	C	UJ	UNFI	0.002	mg/L	D	U
Calcium	UNFI	102.000	mg/L	C	-	UNFI	610.000	mg/L	C	-	UNFI	143.000	mg/L	D	-
Chromium	UNFI	0.004	mg/L	C	U	UNFI	0.090	mg/L	C	J	UNFI	0.004	mg/L	D	U
Cobalt	UNFI	0.003	mg/L	C	U	UNFI	0.033	mg/L	C	-	UNFI	0.003	mg/L	D	U
Copper	UNFI	0.004	mg/L	C	U	UNFI	0.120	mg/L	C	-	UNFI	0.002	mg/L	D	U
Cyanide	UNFI	0.002	mg/L	C	-		NA				UNFI	0.002	mg/L	D	-
Iron	UNFI	0.025	mg/L	C	U	UNFI	131.000	mg/L	C	-	UNFI	0.019	mg/L	D	U
Lead	UNFI	0.001	mg/L	C	U	UNFI	0.034	mg/L	C	-	UNFI	0.001	mg/L	D	U
Magnesium	UNFI	60.700	mg/L	C	-	UNFI	250.000	mg/L	C	-	UNFI	60.900	mg/L	D	-
Manganese	UNFI	0.012	mg/L	C	-	UNFI	2.240	mg/L	C	-	UNFI	0.943	mg/L	D	-
Mercury	UNFI	0.000	mg/L	C	U	UNFI	0.000	mg/L	C	U	UNFI	0.000	mg/L	D	U
Molybdenum	UNFI	0.003	mg/L	C	U	UNFI	0.043	mg/L	C	-	UNFI	0.011	mg/L	D	U
Nickel	UNFI	0.003	mg/L	C	U	UNFI	0.136	mg/L	C	J	UNFI	0.068	mg/L	D	-
Potassium	UNFI	0.718	mg/L	C	-	UNFI	16.000	mg/L	C	-	UNFI	0.925	mg/L	D	-
Selenium	UNFI	0.004	mg/L	C	-	UNFI	0.004	mg/L	C	J	UNFI	0.001	mg/L	D	U
Silicon	UNFI	8.030	mg/L	C	-	UNFI	102.000	mg/L	C	J	UNFI	6.580	mg/L	D	-
Silver	UNFI	0.002	mg/L	C	U	UNFI	0.035	mg/L	C	-	UNFI	0.002	mg/L	D	U
Sodium	UNFI	10.000	mg/L	C	-	UNFI	8.850	mg/L	C	-	UNFI	11.700	mg/L	D	-
Thallium	UNFI	0.001	mg/L	C	U	UNFI	0.002	mg/L	C	UJ	UNFI	0.001	mg/L	D	U
Vanadium	UNFI	0.007	mg/L	C	U	UNFI	0.205	mg/L	C	-	UNFI	0.010	mg/L	D	U
Zinc	UNFI	0.015	mg/L	C	U	UNFI	0.330	mg/L	C	J	UNFI	0.012	mg/L	D	U
Volatile Organics															
1,1,1-Trichloroethane	UNFI	10.000	ug/L	C	U		NA				UNFI	10.000	ug/L	D	U
1,1,2,2-Tetrachloroethane	UNFI	10.000	ug/L	C	U		NA				UNFI	10.000	ug/L	D	U
1,1,2-Trichloroethane	UNFI	10.000	ug/L	C	U		NA				UNFI	10.000	ug/L	D	U
1,1-Dichloroethane	UNFI	10.000	ug/L	C	U		NA				UNFI	10.000	ug/L	D	U
1,1-Dichloroethene	UNFI	10.000	ug/L	C	U		NA				UNFI	10.000	ug/L	D	U
1,2-Dichloroethane	UNFI	10.000	ug/L	C	U		NA				UNFI	10.000	ug/L	D	U
1,2-Dichloroethene	UNFI	10.000	ug/L	C	U		NA				UNFI	10.000	ug/L	D	U
1,2-Dichloropropane	UNFI	10.000	ug/L	C	U		NA				UNFI	10.000	ug/L	D	U
2-Butanone	UNFI	10.000	ug/L	C	U		NA				UNFI	10.000	ug/L	D	U
2-Hexanone	UNFI	10.000	ug/L	C	UJ		NA				UNFI	10.000	ug/L	D	UJ
4-Methyl-2-pentanone	UNFI	10.000	ug/L	C	U		NA				UNFI	10.000	ug/L	D	U
Acetone	UNFI	10.000	ug/L	C	U		NA				UNFI	10.000	ug/L	D	U
Benzene	UNFI	10.000	ug/L	C	U		NA				UNFI	10.000	ug/L	D	U

0564

5174

TABLE F-11A
(Continued)

PHASE II - CHEMICAL PARAMETERS

BORING NUMBER		1941					1941					1942				
SAMPLE NUMBER		112997					113316					113000				
SAMPLING DATE		04/30/93					05/28/93					05/01/93				
CHEMICAL PARAMETERS	FLTD	RESULTS	UNITS	L	VQ		FLTD	RESULTS	UNITS	L	VQ	FLTD	RESULTS	UNITS	L	VQ
Volatile Organics																
Bromodichloromethane	UNFI	10.000	ug/L	C	U			NA				UNFI	10.000	ug/L	D	U
Bromoform	UNFI	10.000	ug/L	C	U			NA				UNFI	10.000	ug/L	D	U
Bromomethane	UNFI	10.000	ug/L	C	U			NA				UNFI	10.000	ug/L	D	U
Carbon Tetrachloride	UNFI	10.000	ug/L	C	U			NA				UNFI	10.000	ug/L	D	U
Carbon disulfide	UNFI	10.000	ug/L	C	UJ			NA				UNFI	10.000	ug/L	D	UJ
Chlorobenzene	UNFI	10.000	ug/L	C	U			NA				UNFI	10.000	ug/L	D	U
Chloroethane	UNFI	10.000	ug/L	C	UJ			NA				UNFI	10.000	ug/L	D	UJ
Chloroform	UNFI	10.000	ug/L	C	U			NA				UNFI	10.000	ug/L	D	U
Chloromethane	UNFI	10.000	ug/L	C	UJ			NA				UNFI	10.000	ug/L	D	UJ
Dibromochloromethane	UNFI	10.000	ug/L	C	U			NA				UNFI	10.000	ug/L	D	U
Ethylbenzene	UNFI	10.000	ug/L	C	U			NA				UNFI	10.000	ug/L	D	U
Methylene chloride	UNFI	12.000	ug/L	C	UJ			NA				UNFI	10.000	ug/L	D	UJ
Styrene	UNFI	10.000	ug/L	C	U			NA				UNFI	10.000	ug/L	D	U
Tetrachloroethene	UNFI	10.000	ug/L	C	U			NA				UNFI	10.000	ug/L	D	U
Toluene	UNFI	10.000	ug/L	C	U			NA				UNFI	10.000	ug/L	D	U
Trichloroethene	UNFI	10.000	ug/L	C	U			NA				UNFI	10.000	ug/L	D	U
Vinyl Acetate	UNFI	10.000	ug/L	C	U			NA				UNFI	10.000	ug/L	D	U
Vinyl chloride	UNFI	10.000	ug/L	C	U			NA				UNFI	10.000	ug/L	D	U
Xylenes, Total	UNFI	10.000	ug/L	C	U			NA				UNFI	10.000	ug/L	D	U
cis-1,3-Dichloropropene	UNFI	10.000	ug/L	C	U			NA				UNFI	10.000	ug/L	D	U
trans-1,3-Dichloropropene	UNFI	10.000	ug/L	C	U			NA				UNFI	10.000	ug/L	D	U
Semivolatile Organics																
1,2,4-Trichlorobenzene	UNFI	10.000	ug/L	C	U			NA				UNFI	10.000	ug/L	D	U
1,2-Dichlorobenzene	UNFI	10.000	ug/L	C	U			NA				UNFI	10.000	ug/L	D	U
1,3-Dichlorobenzene	UNFI	10.000	ug/L	C	U			NA				UNFI	10.000	ug/L	D	U
1,4-Dichlorobenzene	UNFI	10.000	ug/L	C	U			NA				UNFI	10.000	ug/L	D	U
2,4,5-Trichlorophenol	UNFI	25.000	ug/L	C	U			NA				UNFI	25.000	ug/L	D	U
2,4,6-Trichlorophenol	UNFI	10.000	ug/L	C	U			NA				UNFI	10.000	ug/L	D	U
2,4-Dichlorophenol	UNFI	10.000	ug/L	C	U			NA				UNFI	10.000	ug/L	D	U
2,4-Dimethylphenol	UNFI	10.000	ug/L	C	U			NA				UNFI	10.000	ug/L	D	U
2,4-Dinitrophenol	UNFI	25.000	ug/L	C	R			NA				UNFI	25.000	ug/L	D	R
2,4-Dinitrotoluene	UNFI	10.000	ug/L	C	U			NA				UNFI	10.000	ug/L	D	U
2,6-Dinitrotoluene	UNFI	10.000	ug/L	C	U			NA				UNFI	10.000	ug/L	D	U
2-Chloronaphthalene	UNFI	10.000	ug/L	C	U			NA				UNFI	10.000	ug/L	D	U
2-Chlorophenol	UNFI	10.000	ug/L	C	U			NA				UNFI	10.000	ug/L	D	U
2-Methylnaphthalene	UNFI	10.000	ug/L	C	U			NA				UNFI	10.000	ug/L	D	U
2-Methylphenol	UNFI	10.000	ug/L	C	U			NA				UNFI	10.000	ug/L	D	U
2-Nitroaniline	UNFI	25.000	ug/L	C	U			NA				UNFI	25.000	ug/L	D	U
2-Nitrophenol	UNFI	10.000	ug/L	C	U			NA				UNFI	10.000	ug/L	D	U
3,3'-Dichlorobenzidine	UNFI	10.000	ug/L	C	U			NA				UNFI	10.000	ug/L	D	U

TABLE F-11A
(Continued)

PHASE II - CHEMICAL PARAMETERS

BORING NUMBER		1941				1941				1942			
SAMPLE NUMBER		112997				113316				113000			
SAMPLING DATE		04/30/93				05/28/93				05/01/93			
CHEMICAL PARAMETERS	FLTD	RESULTS	UNITS	L	VQ	FLTD	RESULTS	UNITS	L VQ	FLTD	RESULTS	UNITS	L VQ
Semivolatile Organics													
3-Nitroaniline	UNFI	25.000	ug/L	C	U		NA			UNFI	25.000	ug/L	D U
4,6-Dinitro-2-methylphenol	UNFI	25.000	ug/L	C	R		NA			UNFI	25.000	ug/L	D R
4-Bromophenyl phenyl ether	UNFI	10.000	ug/L	C	U		NA			UNFI	10.000	ug/L	D U
4-Chloro-3-methylphenol	UNFI	10.000	ug/L	C	U		NA			UNFI	10.000	ug/L	D U
4-Chlorophenylphenyl ether	UNFI	10.000	ug/L	C	U		NA			UNFI	10.000	ug/L	D U
4-Methylphenol	UNFI	10.000	ug/L	C	U		NA			UNFI	10.000	ug/L	D U
4-Nitroaniline	UNFI	25.000	ug/L	C	U		NA			UNFI	25.000	ug/L	D U
4-Nitrophenol	UNFI	25.000	ug/L	C	R		NA			UNFI	25.000	ug/L	D R
Acenaphthene	UNFI	10.000	ug/L	C	U		NA			UNFI	10.000	ug/L	D U
Acenaphthylene	UNFI	10.000	ug/L	C	U		NA			UNFI	10.000	ug/L	D U
Anthracene	UNFI	10.000	ug/L	C	U		NA			UNFI	10.000	ug/L	D U
Benzo(a)anthracene	UNFI	10.000	ug/L	C	U		NA			UNFI	10.000	ug/L	D U
Benzo(a)pyrene	UNFI	10.000	ug/L	C	U		NA			UNFI	10.000	ug/L	D U
Benzo(b)fluoranthene	UNFI	10.000	ug/L	C	U		NA			UNFI	10.000	ug/L	D U
Benzo(g,h,i)perylene	UNFI	10.000	ug/L	C	U		NA			UNFI	10.000	ug/L	D U
Benzo(k)fluoranthene	UNFI	10.000	ug/L	C	U		NA			UNFI	10.000	ug/L	D U
Benzoic acid	UNFI	50.000	ug/L	C	R		NA			UNFI	50.000	ug/L	D R
Benzyl alcohol	UNFI	10.000	ug/L	C	UJ		NA			UNFI	10.000	ug/L	D UJ
Butyl benzyl phthalate	UNFI	10.000	ug/L	C	UJ		NA			UNFI	10.000	ug/L	D UJ
Carbazole	UNFI	10.000	ug/L	C	U		NA			UNFI	10.000	ug/L	D U
Chrysene	UNFI	10.000	ug/L	C	U		NA			UNFI	10.000	ug/L	D U
Di-n-butyl phthalate	UNFI	10.000	ug/L	C	U		NA			UNFI	10.000	ug/L	D U
Di-n-octyl phthalate	UNFI	10.000	ug/L	C	R		NA			UNFI	10.000	ug/L	D R
Dibenzo(a,h)anthracene	UNFI	10.000	ug/L	C	UJ		NA			UNFI	10.000	ug/L	D UJ
Dibenzofuran	UNFI	10.000	ug/L	C	U		NA			UNFI	10.000	ug/L	D U
Diethyl phthalate	UNFI	10.000	ug/L	C	U		NA			UNFI	10.000	ug/L	D U
Dimethyl phthalate	UNFI	10.000	ug/L	C	U		NA			UNFI	10.000	ug/L	D U
Fluoranthene	UNFI	10.000	ug/L	C	U		NA			UNFI	10.000	ug/L	D U
Fluorene	UNFI	10.000	ug/L	C	U		NA			UNFI	10.000	ug/L	D U
Hexachlorobenzene	UNFI	10.000	ug/L	C	UJ		NA			UNFI	10.000	ug/L	D UJ
Hexachlorobutadiene	UNFI	10.000	ug/L	C	U		NA			UNFI	10.000	ug/L	D U
Hexachlorocyclopentadiene	UNFI	10.000	ug/L	C	UJ		NA			UNFI	10.000	ug/L	D UJ
Hexachloroethane	UNFI	10.000	ug/L	C	U		NA			UNFI	10.000	ug/L	D U
Indeno(1,2,3-cd)pyrene	UNFI	10.000	ug/L	C	UJ		NA			UNFI	10.000	ug/L	D UJ
Isophorone	UNFI	10.000	ug/L	C	U		NA			UNFI	10.000	ug/L	D U
N-Nitroso-di-n-propylamine	UNFI	10.000	ug/L	C	U		NA			UNFI	10.000	ug/L	D U
N-Nitrosodiphenylamine	UNFI	10.000	ug/L	C	U		NA			UNFI	10.000	ug/L	D U
Naphthalene	UNFI	10.000	ug/L	C	U		NA			UNFI	10.000	ug/L	D U
Nitrobenzene	UNFI	10.000	ug/L	C	U		NA			UNFI	10.000	ug/L	D U
Pentachlorophenol	UNFI	25.000	ug/L	C	UJ		NA			UNFI	25.000	ug/L	D UJ
Phenanthrene	UNFI	10.000	ug/L	C	U		NA			UNFI	10.000	ug/L	D U
Phenol	UNFI	10.000	ug/L	C	U		NA			UNFI	10.000	ug/L	D U

0366

5174

TABLE F-11A
(Continued)

PHASE II - CHEMICAL PARAMETERS

BORING NUMBER		1941					1941					1942				
SAMPLE NUMBER		112997					113316					113000				
SAMPLING DATE		04/30/93					05/28/93					05/01/93				
CHEMICAL PARAMETERS	FLTD	RESULTS	UNITS	L	VQ		FLTD	RESULTS	UNITS	L	VQ	FLTD	RESULTS	UNITS	L	VQ
Semivolatile Organics																
Pyrene	UNFI	10.000	ug/L	C	U			NA				UNFI	10.000	ug/L	D	U
bis(2-Chloroethoxy)methane	UNFI	10.000	ug/L	C	U			NA				UNFI	10.000	ug/L	D	U
bis(2-Chloroethyl)ether	UNFI	10.000	ug/L	C	U			NA				UNFI	10.000	ug/L	D	U
bis(2-Chloroisopropyl) ether	UNFI	10.000	ug/L	C	U			NA				UNFI	10.000	ug/L	D	U
bis(2-Ethylhexyl) phthalate	UNFI	10.000	ug/L	C	UJ			NA				UNFI	10.000	ug/L	D	UJ
p-Chloroaniline	UNFI	10.000	ug/L	C	U			NA				UNFI	10.000	ug/L	D	U
Pesticide Organics/PCBs																
4,4'-DDD	UNFI	0.100	ug/L	C	U			NA				UNFI	0.100	ug/L	D	U
4,4'-DDE	UNFI	0.100	ug/L	C	U			NA				UNFI	0.100	ug/L	D	U
4,4'-DDT	UNFI	0.100	ug/L	C	U			NA				UNFI	0.100	ug/L	D	U
Aldrin	UNFI	0.050	ug/L	C	U			NA				UNFI	0.050	ug/L	D	U
Aroclor-1016	UNFI	1.000	ug/L	C	UJ			NA				UNFI	1.000	ug/L	D	UJ
Aroclor-1221	UNFI	2.000	ug/L	C	UJ			NA				UNFI	2.000	ug/L	D	UJ
Aroclor-1232	UNFI	1.000	ug/L	C	UJ			NA				UNFI	1.000	ug/L	D	UJ
Aroclor-1242	UNFI	1.000	ug/L	C	UJ			NA				UNFI	1.000	ug/L	D	UJ
Aroclor-1248	UNFI	1.000	ug/L	C	UJ			NA				UNFI	1.000	ug/L	D	UJ
Aroclor-1254	UNFI	1.000	ug/L	C	UJ			NA				UNFI	1.000	ug/L	D	UJ
Aroclor-1260	UNFI	1.000	ug/L	C	UJ			NA				UNFI	1.000	ug/L	D	UJ
Dieldrin	UNFI	0.100	ug/L	C	U			NA				UNFI	0.100	ug/L	D	U
Endosulfan II	UNFI	0.100	ug/L	C	U			NA				UNFI	0.100	ug/L	D	U
Endosulfan sulfate	UNFI	0.100	ug/L	C	U			NA				UNFI	0.100	ug/L	D	U
Endosulfan-I	UNFI	0.050	ug/L	C	U			NA				UNFI	0.050	ug/L	D	U
Endrin	UNFI	0.100	ug/L	C	U			NA				UNFI	0.100	ug/L	D	U
Endrin aldehyde	UNFI	0.100	ug/L	C	U			NA				UNFI	0.100	ug/L	D	U
Endrin ketone	UNFI	0.100	ug/L	C	U			NA				UNFI	0.100	ug/L	D	U
Heptachlor	UNFI	0.050	ug/L	C	U			NA				UNFI	0.050	ug/L	D	U
Heptachlor epoxide	UNFI	0.050	ug/L	C	U			NA				UNFI	0.050	ug/L	D	U
Methoxychlor	UNFI	0.500	ug/L	C	U			NA				UNFI	0.500	ug/L	D	U
Toxaphene	UNFI	5.000	ug/L	C	UJ			NA				UNFI	5.000	ug/L	D	UJ
alpha-BHC	UNFI	0.050	ug/L	C	UJ			NA				UNFI	0.050	ug/L	D	UJ
alpha-Chlordane	UNFI	0.050	ug/L	C	U			NA				UNFI	0.050	ug/L	D	U
beta-BHC	UNFI	0.050	ug/L	C	U			NA				UNFI	0.050	ug/L	D	U
delta-BHC	UNFI	0.050	ug/L	C	UJ			NA				UNFI	0.050	ug/L	D	UJ
gamma-BHC (Lindane)	UNFI	0.050	ug/L	C	UJ			NA				UNFI	0.050	ug/L	D	UJ
gamma-Chlordane	UNFI	0.050	ug/L	C	U			NA				UNFI	0.050	ug/L	D	U
General Chemistry																
Alkalinity	UNFI	420.000	mg/L	B	-			NA				UNFI	390.000	mg/L	B	-
Ammonia	UNFI	0.410	mg/L	B	-			NA				UNFI	0.560	mg/L	B	-

TABLE F-11A
(Continued)

PHASE II - CHEMICAL PARAMETERS

BORING NUMBER		1941				1941				1942			
SAMPLE NUMBER		112997				113316				113000			
SAMPLING DATE		04/30/93				05/28/93				05/01/93			
CHEMICAL PARAMETERS	FLTD	RESULTS	UNITS	L	VQ	FLTD	RESULTS	UNITS	L	VQ	FLTD	RESULTS	UNITS	L	VQ
General Chemistry															
Chloride	UNFI	3.150	mg/L	B	-		NA				UNFI	4.610	mg/L	B	-
Fluoride	UNFI	0.510	mg/L	B	-		NA				UNFI	0.300	mg/L	B	-
Nitrate	UNFI	0.710	mg/L	B	R		NA				UNFI	0.100	mg/L	B	R
Phenols	UNFI	0.010	mg/L	B	U		NA				UNFI	0.010	mg/L	B	U
Sulfate	UNFI	87.500	mg/L	B	-		NA				UNFI	162.700	mg/L	B	-
Sulfide	UNFI	0.500	mg/L	B	U		NA				UNFI	0.500	mg/L	B	U
Total Kjeldahl Nitrogen	UNFI	8.430	mg/L	B	-		NA				UNFI	3.240	mg/L	B	-
Total Organic Carbon	UNFI	2.600	mg/L	B	-		NA				UNFI	3.380	mg/L	B	-
Total Organic Halides	UNFI	0.010	mg/L	B	U		NA				UNFI	0.012	mg/L	B	-
Total Organic Nitrogen	UNFI	8.020	mg/L	B	-		NA				UNFI	2.680	mg/L	B	-
Total Phosphorous	UNFI	10.370	mg/L	B	-		NA				UNFI	8.060	mg/L	B	-

0868

5174

TABLE F-11A
(Continued)

PHASE II - CHEMICAL PARAMETERS

BORING NUMBER		1942				1954				2014			
SAMPLE NUMBER		113319				113798				111992			
SAMPLING DATE		05/28/93				06/22/93				04/30/93			
CHEMICAL PARAMETERS	FLTD	RESULTS	UNITS	L	VQ	FLTD	RESULTS	UNITS	L	VQ	FLTD	RESULTS	UNITS	L	VQ
Inorganics															
Aluminum		NA				FILT	0.229	mg/L	C	U		NA			
Aluminum	UNFI	53.000	mg/L	C	-	UNFI	49.000	mg/L	C	-	UNFI	0.696	mg/L	C	-
Antimony		NA				FILT	0.012	mg/L	C	-		NA			
Antimony	UNFI	0.005	mg/L	C	UJ	UNFI	0.005	mg/L	C	U	UNFI	0.001	mg/L	C	UJ
Arsenic		NA				FILT	0.002	mg/L	C	U		NA			
Arsenic	UNFI	0.006	mg/L	C	J	UNFI	0.010	mg/L	C	-	UNFI	0.001	mg/L	C	-
Barium		NA				FILT	0.054	mg/L	C	-		NA			
Barium	UNFI	0.368	mg/L	C	-	UNFI	0.319	mg/L	C	-	UNFI	0.039	mg/L	C	J
Beryllium		NA				FILT	0.002	mg/L	C	U		NA			
Beryllium	UNFI	0.002	mg/L	C	U	UNFI	0.002	mg/L	C	U	UNFI	0.002	mg/L	C	U
Cadmium		NA				FILT	0.005	mg/L	C	U		NA			
Cadmium	UNFI	0.005	mg/L	C	UJ	UNFI	0.005	mg/L	C	U	UNFI	0.002	mg/L	C	U
Calcium		NA				FILT	161.000	mg/L	C	-		NA			
Calcium	UNFI	390.000	mg/L	C	-	UNFI	381.000	mg/L	C	-	UNFI	83.500	mg/L	C	-
Chromium		NA				FILT	0.010	mg/L	C	U		NA			
Chromium	UNFI	0.056	mg/L	C	J	UNFI	0.047	mg/L	C	-	UNFI	0.004	mg/L	C	U
Cobalt		NA				FILT	0.010	mg/L	C	U		NA			
Cobalt	UNFI	0.026	mg/L	C	-	UNFI	0.025	mg/L	C	-	UNFI	0.003	mg/L	C	U
Copper		NA				FILT	0.010	mg/L	C	U		NA			
Copper	UNFI	0.076	mg/L	C	-	UNFI	0.062	mg/L	C	-	UNFI	0.005	mg/L	C	U
Cyanide		NA				UNFI	0.002	mg/L	C	U	UNFI	0.001	mg/L	C	U
Iron		NA				FILT	0.020	mg/L	C	U		NA			
Iron	UNFI	82.400	mg/L	C	-	UNFI	70.300	mg/L	C	-	UNFI	0.295	mg/L	C	-
Lead		NA				FILT	0.002	mg/L	C	U		NA			
Lead	UNFI	0.040	mg/L	C	-	UNFI	0.045	mg/L	C	-	UNFI	0.001	mg/L	C	U
Magnesium		NA				FILT	72.700	mg/L	C	-		NA			
Magnesium	UNFI	145.000	mg/L	C	-	UNFI	147.000	mg/L	C	-	UNFI	20.600	mg/L	C	-
Manganese		NA				FILT	1.500	mg/L	C	-		NA			
Manganese	UNFI	2.310	mg/L	C	-	UNFI	2.370	mg/L	C	-	UNFI	0.023	mg/L	C	-
Mercury		NA				FILT	0.000	mg/L	C	U		NA			
Mercury	UNFI	0.000	mg/L	C	U	UNFI	0.000	mg/L	C	U	UNFI	0.000	mg/L	C	U
Molybdenum		NA				FILT	0.010	mg/L	C	U		NA			
Molybdenum	UNFI	0.031	mg/L	C	-	UNFI	0.032	mg/L	C	-	UNFI	0.003	mg/L	C	U
Nickel		NA				FILT	0.020	mg/L	C	U		NA			
Nickel	UNFI	0.116	mg/L	C	J	UNFI	0.127	mg/L	C	-	UNFI	0.003	mg/L	C	U
Potassium		NA				FILT	2.040	mg/L	C	-		NA			
Potassium	UNFI	11.600	mg/L	C	-	UNFI	13.600	mg/L	C	-	UNFI	2.760	mg/L	C	-
Selenium		NA				FILT	0.002	mg/L	C	UJ		NA			
Selenium	UNFI	0.002	mg/L	C	UJ	UNFI	0.002	mg/L	C	U	UNFI	0.001	mg/L	C	U
Silicon		NA				FILT	7.890	mg/L	C	-		NA			
Silicon	UNFI	74.600	mg/L	C	J	UNFI	77.200	mg/L	C	-	UNFI	3.070	mg/L	C	-
Silver		NA				FILT	0.010	mg/L	C	U		NA			

TABLE F-11A
(Continued)

PHASE II - CHEMICAL PARAMETERS

BORING NUMBER		1942					1954					2014				
SAMPLE NUMBER		113319					113798					111992				
SAMPLING DATE		05/28/93					06/22/93					04/30/93				
CHEMICAL PARAMETERS	FLTD	RESULTS	UNITS	L	VQ		FLTD	RESULTS	UNITS	L	VQ	FLTD	RESULTS	UNITS	L	VQ
Inorganics																
Silver	UNFI	0.022	mg/L	C	-		UNFI	0.018	mg/L	C	-	UNFI	0.002	mg/L	C	U
Sodium		NA					FILT	11.600	mg/L	C	-		NA			
Sodium	UNFI	12.900	mg/L	C	-		UNFI	10.600	mg/L	C	-	UNFI	11.300	mg/L	C	-
Thallium		NA					FILT	0.002	mg/L	C	U		NA			
Thallium	UNFI	0.002	mg/L	C	UJ		UNFI	0.002	mg/L	C	U	UNFI	0.001	mg/L	C	U
Vanadium		NA					FILT	0.010	mg/L	C	U		NA			
Vanadium	UNFI	0.120	mg/L	C	-		UNFI	0.103	mg/L	C	-	UNFI	0.007	mg/L	C	U
Zinc		NA					FILT	0.007	mg/L	C	-		NA			
Zinc	UNFI	0.221	mg/L	C	J		UNFI	0.181	mg/L	C	-	UNFI	0.006	mg/L	C	U
Volatile Organics																
1,1,1-Trichloroethane		NA					UNFI	10.000	ug/L	C	U	UNFI	10.000	ug/L	C	U
1,1,2,2-Tetrachloroethane		NA					UNFI	10.000	ug/L	C	U	UNFI	10.000	ug/L	C	U
1,1,2-Trichloroethane		NA					UNFI	10.000	ug/L	C	U	UNFI	10.000	ug/L	C	U
1,1-Dichloroethane		NA					UNFI	10.000	ug/L	C	U	UNFI	10.000	ug/L	C	U
1,1-Dichloroethene		NA					UNFI	10.000	ug/L	C	U	UNFI	10.000	ug/L	C	U
1,2-Dichloroethane		NA					UNFI	10.000	ug/L	C	U	UNFI	10.000	ug/L	C	U
1,2-Dichloroethene		NA					UNFI	10.000	ug/L	C	U	UNFI	10.000	ug/L	C	U
1,2-Dichloropropane		NA					UNFI	10.000	ug/L	C	U	UNFI	10.000	ug/L	C	U
2-Butanone		NA					UNFI	10.000	ug/L	C	U	UNFI	10.000	ug/L	C	U
2-Hexanone		NA					UNFI	10.000	ug/L	C	U	UNFI	10.000	ug/L	C	UJ
4-Methyl-2-pentanone		NA					UNFI	10.000	ug/L	C	U	UNFI	10.000	ug/L	C	U
Acetone		NA					UNFI	10.000	ug/L	C	U	UNFI	10.000	ug/L	C	U
Benzene		NA					UNFI	10.000	ug/L	C	U	UNFI	10.000	ug/L	C	U
Bromodichloromethane		NA					UNFI	10.000	ug/L	C	U	UNFI	10.000	ug/L	C	U
Bromoform		NA					UNFI	10.000	ug/L	C	U	UNFI	10.000	ug/L	C	U
Bromomethane		NA					UNFI	10.000	ug/L	U	U	UNFI	10.000	ug/L	C	U
Carbon Tetrachloride		NA					UNFI	10.000	ug/L	C	U	UNFI	10.000	ug/L	C	U
Carbon disulfide		NA					UNFI	10.000	ug/L	C	U	UNFI	10.000	ug/L	C	UJ
Chlorobenzene		NA					UNFI	10.000	ug/L	C	U	UNFI	10.000	ug/L	C	U
Chloroethane		NA					UNFI	10.000	ug/L	C	U	UNFI	10.000	ug/L	C	UJ
Chloroform		NA					UNFI	10.000	ug/L	C	U	UNFI	10.000	ug/L	C	U
Chloromethane		NA					UNFI	10.000	ug/L	C	U	UNFI	10.000	ug/L	C	UJ
Dibromochloromethane		NA					UNFI	10.000	ug/L	C	U	UNFI	10.000	ug/L	C	U
Ethylbenzene		NA					UNFI	10.000	ug/L	C	U	UNFI	10.000	ug/L	C	U
Methylene chloride		NA					UNFI	15.000	ug/L	C	U	UNFI	10.000	ug/L	C	UJ
Styrene		NA					UNFI	10.000	ug/L	C	U	UNFI	10.000	ug/L	C	U
Tetrachloroethene		NA					UNFI	10.000	ug/L	C	U	UNFI	10.000	ug/L	C	U
Toluene		NA					UNFI	10.000	ug/L	C	U	UNFI	10.000	ug/L	C	U
Trichloroethene		NA					UNFI	10.000	ug/L	C	U	UNFI	10.000	ug/L	C	U
Vinyl Acetate		NA						NA				UNFI	10.000	ug/L	C	U

0870

5174
FEMP-OU02-4 DRAFT
February 18, 1994

TABLE F-11A
(Continued)

PHASE II - CHEMICAL PARAMETERS

BORING NUMBER	1942					1954					2014				
SAMPLE NUMBER	113319					113798					111992				
SAMPLING DATE	05/28/93					06/22/93					04/30/93				
CHEMICAL PARAMETERS	FLTD	RESULTS	UNITS	L	VQ	FLTD	RESULTS	UNITS	L	VQ	FLTD	RESULTS	UNITS	L	VQ
Volatile Organics															
Vinyl chloride		NA				UNFI	10.000	ug/L	U	U	UNFI	10.000	ug/L	C	U
Xylenes, Total		NA				UNFI	10.000	ug/L	C	U	UNFI	10.000	ug/L	C	U
cis-1,3-Dichloropropene		NA				UNFI	10.000	ug/L	C	U	UNFI	10.000	ug/L	C	U
trans-1,3-Dichloropropene		NA				UNFI	10.000	ug/L	C	U	UNFI	10.000	ug/L	C	U
Semivolatile Organics															
1,2,4-Trichlorobenzene		NA				UNFI	10.000	ug/L	C	U	UNFI	10.000	ug/L	C	U
1,2-Dichlorobenzene		NA				UNFI	10.000	ug/L	C	U	UNFI	10.000	ug/L	C	U
1,3-Dichlorobenzene		NA				UNFI	10.000	ug/L	C	U	UNFI	10.000	ug/L	C	U
1,4-Dichlorobenzene		NA				UNFI	10.000	ug/L	C	U	UNFI	10.000	ug/L	C	U
2,4,5-Trichlorophenol		NA				UNFI	25.000	ug/L	C	U	UNFI	25.000	ug/L	C	U
2,4,6-Trichlorophenol		NA				UNFI	10.000	ug/L	C	U	UNFI	10.000	ug/L	C	U
2,4-Dichlorophenol		NA				UNFI	10.000	ug/L	C	U	UNFI	10.000	ug/L	C	U
2,4-Dimethylphenol		NA				UNFI	10.000	ug/L	C	U	UNFI	10.000	ug/L	C	U
2,4-Dinitrophenol		NA				UNFI	25.000	ug/L	C	UJ	UNFI	25.000	ug/L	C	R
2,4-Dinitrotoluene		NA				UNFI	10.000	ug/L	C	U	UNFI	10.000	ug/L	C	U
2,6-Dinitrotoluene		NA				UNFI	10.000	ug/L	C	U	UNFI	10.000	ug/L	C	U
2-Benzyl-4-chlorophenol		NA				UNFI	10.000	ug/L	C	U		NA			
2-Chloronaphthalene		NA				UNFI	10.000	ug/L	C	U	UNFI	10.000	ug/L	C	U
2-Chlorophenol		NA				UNFI	10.000	ug/L	C	U	UNFI	10.000	ug/L	C	U
2-Methylnaphthalene		NA				UNFI	10.000	ug/L	C	U	UNFI	10.000	ug/L	C	U
2-Methylphenol		NA				UNFI	10.000	ug/L	C	U	UNFI	10.000	ug/L	C	U
2-Nitroaniline		NA				UNFI	25.000	ug/L	C	U	UNFI	25.000	ug/L	C	U
2-Nitrophenol		NA				UNFI	10.000	ug/L	C	U	UNFI	10.000	ug/L	C	U
3,3'-Dichlorobenzidine		NA				UNFI	10.000	ug/L	C	U	UNFI	10.000	ug/L	C	U
3-Nitroaniline		NA				UNFI	25.000	ug/L	C	U	UNFI	25.000	ug/L	C	U
4,6-Dinitro-2-methylphenol		NA				UNFI	25.000	ug/L	C	UJ	UNFI	25.000	ug/L	C	R
4-Bromophenyl phenyl ether		NA				UNFI	10.000	ug/L	C	U	UNFI	10.000	ug/L	C	U
4-Chloro-3-methylphenol		NA				UNFI	10.000	ug/L	C	U	UNFI	10.000	ug/L	C	U
4-Chlorophenylphenyl ether		NA				UNFI	10.000	ug/L	C	U	UNFI	10.000	ug/L	C	U
4-Methylphenol		NA				UNFI	10.000	ug/L	C	U	UNFI	10.000	ug/L	C	U
4-Nitroaniline		NA				UNFI	25.000	ug/L	U	U	UNFI	25.000	ug/L	C	U
4-Nitrophenol		NA				UNFI	25.000	ug/L	C	U	UNFI	25.000	ug/L	C	R
Acenaphthene		NA				UNFI	10.000	ug/L	C	U	UNFI	10.000	ug/L	C	U
Acenaphthylene		NA				UNFI	10.000	ug/L	C	U	UNFI	10.000	ug/L	C	U
Anthracene		NA				UNFI	10.000	ug/L	C	U	UNFI	10.000	ug/L	C	U
Benzo(a)anthracene		NA				UNFI	10.000	ug/L	C	U	UNFI	10.000	ug/L	C	U
Benzo(a)pyrene		NA				UNFI	10.000	ug/L	C	U	UNFI	10.000	ug/L	C	U
Benzo(b)fluoranthene		NA				UNFI	10.000	ug/L	C	U	UNFI	10.000	ug/L	C	U
Benzo(g,h,i)perylene		NA				UNFI	10.000	ug/L	C	U	UNFI	10.000	ug/L	C	U
Benzo(k)fluoranthene		NA				UNFI	10.000	ug/L	C	U	UNFI	10.000	ug/L	C	U

TABLE F-11A
(Continued)

PHASE II - CHEMICAL PARAMETERS

BORING NUMBER		1942				1954				2014			
SAMPLE NUMBER		113319				113798				111992			
SAMPLING DATE		05/28/93				06/22/93				04/30/93			
CHEMICAL PARAMETERS	FLTD	RESULTS	UNITS	L	VQ	FLTD	RESULTS	UNITS	L	VQ	FLTD	RESULTS	UNITS	L	VQ
Semivolatile Organics															
Benzoic acid		NA				UNFI	50.000	ug/L	C	U	UNFI	50:000	ug/L	C	R
Benzyl alcohol		NA				UNFI	10.000	ug/L	C	U	UNFI	10.000	ug/L	C	UJ
Butyl benzyl phthalate		NA				UNFI	10.000	ug/L	C	U	UNFI	10.000	ug/L	C	UJ
Carbazole		NA				UNFI	10.000	ug/L	C	U	UNFI	10.000	ug/L	C	U
Chrysene		NA				UNFI	10.000	ug/L	C	U	UNFI	10.000	ug/L	C	U
Di-n-butyl phthalate		NA				UNFI	10.000	ug/L	C	U	UNFI	10.000	ug/L	C	U
Di-n-octyl phthalate		NA				UNFI	10.000	ug/L	C	U	UNFI	10.000	ug/L	C	R
Dibenzo(a,h)anthracene		NA				UNFI	10.000	ug/L	C	U	UNFI	10.000	ug/L	C	UJ
Dibenzofuran		NA				UNFI	10.000	ug/L	C	U	UNFI	10.000	ug/L	C	U
Diethyl phthalate		NA				UNFI	10.000	ug/L	C	U	UNFI	10.000	ug/L	C	U
Dimethyl phthalate		NA				UNFI	10.000	ug/L	C	U	UNFI	10.000	ug/L	C	U
Fluoranthene		NA				UNFI	10.000	ug/L	C	U	UNFI	10.000	ug/L	C	U
Fluorene		NA				UNFI	10.000	ug/L	C	U	UNFI	10.000	ug/L	C	U
Hexachlorobenzene		NA				UNFI	10.000	ug/L	C	U	UNFI	10.000	ug/L	C	UJ
Hexachlorobutadiene		NA				UNFI	10.000	ug/L	C	U	UNFI	10.000	ug/L	C	U
Hexachlorocyclopentadiene		NA				UNFI	10.000	ug/L	C	UJ	UNFI	10.000	ug/L	C	UJ
Hexachloroethane		NA				UNFI	10.000	ug/L	C	U	UNFI	10.000	ug/L	C	U
Indeno(1,2,3-cd)pyrene		NA				UNFI	10.000	ug/L	C	U	UNFI	10.000	ug/L	C	UJ
Isophorone		NA				UNFI	10.000	ug/L	C	U	UNFI	10.000	ug/L	C	U
N-Nitroso-di-n-propylamine		NA				UNFI	10.000	ug/L	C	U	UNFI	10.000	ug/L	C	U
N-Nitrosodimethylamine		NA				UNFI	10.000	ug/L	C	U		NA			
N-Nitrosodiphenylamine		NA				UNFI	10.000	ug/L	C	U	UNFI	10.000	ug/L	C	U
Naphthalene		NA				UNFI	10.000	ug/L	C	U	UNFI	10.000	ug/L	C	U
Nitrobenzene		NA				UNFI	10.000	ug/L	C	U	UNFI	10.000	ug/L	C	U
Pentachlorophenol		NA				UNFI	25.000	ug/L	C	UJ	UNFI	25.000	ug/L	C	UJ
Phenanthrene		NA				UNFI	10.000	ug/L	C	U	UNFI	10.000	ug/L	C	U
Phenol		NA				UNFI	10.000	ug/L	C	U	UNFI	10.000	ug/L	C	U
Pyrene		NA				UNFI	10.000	ug/L	C	U	UNFI	10.000	ug/L	C	U
Tributyl phosphate		NA				UNFI	10.000	ug/L	C	R		NA			
bis(2-Chloroethoxy)methane		NA				UNFI	10.000	ug/L	C	U	UNFI	10.000	ug/L	C	U
bis(2-Chloroethyl)ether		NA				UNFI	10.000	ug/L	C	U	UNFI	10.000	ug/L	C	U
bis(2-Chloroisopropyl) ether		NA				UNFI	10.000	ug/L	C	UJ	UNFI	10.000	ug/L	C	U
bis(2-Ethylhexyl) phthalate		NA				UNFI	10.000	ug/L	C	U	UNFI	10.000	ug/L	C	UJ
p-Chloroaniline		NA				UNFI	10.000	ug/L	C	U	UNFI	10.000	ug/L	C	U
Pesticide Organics/PCBs															
4,4'-DDD		NA				UNFI	0.100	ug/L	C	U	UNFI	0.100	ug/L	C	U
4,4'-DDE		NA				UNFI	0.100	ug/L	C	U	UNFI	0.100	ug/L	C	U
4,4'-DDT		NA				UNFI	0.100	ug/L	C	U	UNFI	0.100	ug/L	C	U
Aldrin		NA				UNFI	0.050	ug/L	C	U	UNFI	0.050	ug/L	C	U
Aroclor-1016		NA				UNFI	1.000	ug/L	C	U	UNFI	1.000	ug/L	C	U

0872

5174

TABLE F-11A
(Continued)

PHASE II - CHEMICAL PARAMETERS

BORING NUMBER		1942				1954				2014			
SAMPLE NUMBER		113319				113798				111992			
SAMPLING DATE		05/28/93				06/22/93				04/30/93			
CHEMICAL PARAMETERS	FLTD	RESULTS	UNITS	L	VQ	FLTD	RESULTS	UNITS	L	VQ	FLTD	RESULTS	UNITS	L	VQ
Pesticide Organics/PCBs															
Aroclor-1221		NA				UNFI	2.000	ug/L	C	U	UNFI	2.000	ug/L	C	U
Aroclor-1232		NA				UNFI	1.000	ug/L	C	U	UNFI	1.000	ug/L	C	U
Aroclor-1242		NA				UNFI	1.000	ug/L	C	U	UNFI	1.000	ug/L	C	U
Aroclor-1248		NA				UNFI	1.000	ug/L	C	U	UNFI	1.000	ug/L	C	U
Aroclor-1254		NA				UNFI	1.000	ug/L	C	U	UNFI	1.000	ug/L	C	U
Aroclor-1260		NA				UNFI	1.000	ug/L	C	U	UNFI	1.000	ug/L	C	U
Dieldrin		NA				UNFI	0.100	ug/L	C	U	UNFI	0.100	ug/L	C	U
Endosulfan II		NA				UNFI	0.100	ug/L	C	U	UNFI	0.100	ug/L	C	U
Endosulfan sulfate		NA				UNFI	0.100	ug/L	C	U	UNFI	0.100	ug/L	C	U
Endosulfan-I		NA				UNFI	0.050	ug/L	C	U	UNFI	0.050	ug/L	C	U
Endrin		NA				UNFI	0.100	ug/L	C	U	UNFI	0.100	ug/L	C	U
Endrin aldehyde		NA				UNFI	0.100	ug/L	C	UJ	UNFI	0.100	ug/L	C	U
Endrin ketone		NA				UNFI	0.100	ug/L	C	U	UNFI	0.100	ug/L	C	U
Heptachlor		NA				UNFI	0.050	ug/L	C	U	UNFI	0.050	ug/L	C	U
Heptachlor epoxide		NA				UNFI	0.050	ug/L	C	U	UNFI	0.050	ug/L	C	U
Methoxychlor		NA				UNFI	0.500	ug/L	C	U	UNFI	0.500	ug/L	C	U
Toxaphene		NA				UNFI	5.000	ug/L	C	U	UNFI	5.000	ug/L	C	U
alpha-BHC		NA				UNFI	0.050	ug/L	C	U	UNFI	0.050	ug/L	C	UJ
alpha-Chlordane		NA				UNFI	0.050	ug/L	C	U	UNFI	0.050	ug/L	C	U
beta-BHC		NA				UNFI	0.050	ug/L	C	U	UNFI	0.050	ug/L	C	U
delta-BHC		NA				UNFI	0.050	ug/L	C	U	UNFI	0.050	ug/L	C	UJ
gamma-BHC (Lindane)		NA				UNFI	0.050	ug/L	C	U	UNFI	0.050	ug/L	C	UJ
gamma-Chlordane		NA				UNFI	0.050	ug/L	C	U	UNFI	0.050	ug/L	C	U
General Chemistry															
Alkalinity		NA				UNFI	560.000	mg/L	B	-	UNFI	240.000	mg/L	B	-
Ammonia		NA				UNFI	0.220	mg/L	B	-	UNFI	0.100	mg/L	B	U
Chloride		NA				UNFI	6.790	mg/L	B	-	UNFI	22.890	mg/L	B	-
Fluoride		NA				UNFI	0.250	mg/L	B	-	UNFI	0.230	mg/L	B	-
Nitrate		NA				UNFI	0.100	mg/L	B	R	UNFI	1.700	mg/L	B	R
Phenols		NA				UNFI	0.010	mg/L	B	U	UNFI	0.010	mg/L	B	U
Sulfate		NA				UNFI	203.700	mg/L	B	-	UNFI	81.100	mg/L	B	-
Sulfide		NA				UNFI	0.500	mg/L	B	U	UNFI	0.500	mg/L	B	U
Total Kjeldahl Nitrogen		NA				UNFI	1.490	mg/L	B	-	UNFI	0.220	mg/L	B	-
Total Organic Carbon		NA				UNFI	1.400	mg/L	B	-	UNFI	1.410	mg/L	B	-
Total Organic Halides		NA				UNFI	0.021	mg/L	B	J	UNFI	0.014	mg/L	B	-
Total Organic Nitrogen		NA				UNFI	1.270	mg/L	B	-	UNFI	0.220	mg/L	B	-
Total Phosphorous		NA				UNFI	2.070	mg/L	B	-	UNFI	0.040	mg/L	B	-

TABLE F-11A
(Continued)

PHASE II - CHEMICAL PARAMETERS

BORING NUMBER		2046					2065					2065				
SAMPLE NUMBER		116233					112008					113291				
SAMPLING DATE		05/11/93					05/03/93					05/03/93				
CHEMICAL PARAMETERS	FLTD	RESULTS	UNITS	L	VQ		FLTD	RESULTS	UNITS	L	VQ	FLTD	RESULTS	UNITS	L	VQ
Inorganics																
Aluminum		NA						NA				FILT	0.144	mg/L	C	-
Aluminum	UNFI	0.078	mg/L	C	U		UNFI	0.080	mg/L	C	-	NA				
Antimony		NA						NA				FILT	0.002	mg/L	C	UJ
Antimony	UNFI	0.002	mg/L	C	U		UNFI	0.001	mg/L	C	UJ	NA				
Arsenic		NA						NA				FILT	0.001	mg/L	C	U
Arsenic	UNFI	0.001	mg/L	C	U		UNFI	0.001	mg/L	C	U	NA				
Barium		NA						NA				FILT	0.042	mg/L	C	J
Barium	UNFI	0.073	mg/L	C	-		UNFI	0.042	mg/L	C	J	NA				
Beryllium		NA						NA				FILT	0.003	mg/L	C	U
Beryllium	UNFI	0.001	mg/L	C	U		UNFI	0.003	mg/L	C	U	NA				
Cadmium		NA						NA				FILT	0.002	mg/L	C	U
Cadmium	UNFI	0.002	mg/L	C	U		UNFI	0.002	mg/L	C	U	NA				
Calcium		NA						NA				FILT	158.000	mg/L	C	-
Calcium	UNFI	124.000	mg/L	C	-		UNFI	155.000	mg/L	C	-	NA				
Chromium		NA						NA				FILT	0.004	mg/L	C	U
Chromium	UNFI	0.004	mg/L	C	U		UNFI	0.004	mg/L	C	U	NA				
Cobalt		NA						NA				FILT	0.003	mg/L	C	U
Cobalt	UNFI	0.003	mg/L	C	U		UNFI	0.003	mg/L	C	U	NA				
Copper		NA						NA				FILT	0.002	mg/L	C	U
Copper	UNFI	0.004	mg/L	C	U		UNFI	0.002	mg/L	C	U	NA				
Cyanide		NA						NA				FILT	0.001	mg/L	C	R
Cyanide	UNFI	0.001	mg/L	C	U		UNFI	0.001	mg/L	C	U	NA				
Iron		NA						NA				FILT	0.312	mg/L	C	-
Iron	UNFI	0.033	mg/L	C	U		UNFI	0.811	mg/L	C	-	NA				
Lead		NA						NA				FILT	0.001	mg/L	C	UJ
Lead	UNFI	0.001	mg/L	C	U		UNFI	0.001	mg/L	C	UJ	NA				
Magnesium		NA						NA				FILT	50.800	mg/L	C	-
Magnesium	UNFI	33.500	mg/L	C	-		UNFI	49.300	mg/L	C	-	NA				
Manganese		NA						NA				FILT	0.257	mg/L	C	-
Manganese	UNFI	0.004	mg/L	C	-		UNFI	0.440	mg/L	C	-	NA				
Mercury		NA						NA				FILT	0.000	mg/L	C	U
Mercury	UNFI	0.000	mg/L	C	U		UNFI	0.000	mg/L	C	U	NA				
Molybdenum		NA						NA				FILT	0.006	mg/L	C	U
Molybdenum	UNFI	0.003	mg/L	C	U		UNFI	0.003	mg/L	C	U	NA				
Nickel		NA						NA				FILT	0.003	mg/L	C	U
Nickel	UNFI	0.003	mg/L	C	U		UNFI	0.003	mg/L	C	U	NA				
Potassium		NA						NA				FILT	3.200	mg/L	C	-
Potassium	UNFI	4.400	mg/L	C	-		UNFI	3.090	mg/L	C	-	NA				
Selenium		NA						NA				FILT	0.001	mg/L	C	U
Selenium	UNFI	0.002	mg/L	C	J		UNFI	0.001	mg/L	C	U	NA				
Silicon		NA						NA				FILT	5.470	mg/L	C	-
Silicon	UNFI	5.030	mg/L	C	-		UNFI	5.180	mg/L	C	-	NA				

0874

0874

TABLE F-11A
(Continued)

PHASE II - CHEMICAL PARAMETERS

BORING NUMBER		2046					2065					2065				
SAMPLE NUMBER		116233					112008					113291				
SAMPLING DATE		05/11/93					05/03/93					05/03/93				
CHEMICAL PARAMETERS	FLTD	RESULTS	UNITS	L	VQ		FLTD	RESULTS	UNITS	L	VQ	FLTD	RESULTS	UNITS	L	VQ
Inorganics																
Silver		NA						NA				FILT	0.002	mg/L	C	U
Silver	UNFI	0.002	mg/L	C	U		UNFI	0.002	mg/L	C	U		NA			
Sodium		NA						NA				FILT	12.700	mg/L	C	-
Sodium	UNFI	9.910	mg/L	C	-		UNFI	12.400	mg/L	C	-		NA			
Thallium		NA						NA				FILT	0.001	mg/L	C	U
Thallium	UNFI	0.001	mg/L	C	U		UNFI	0.001	mg/L	C	U		NA			
Vanadium		NA						NA				FILT	0.010	mg/L	C	U
Vanadium	UNFI	0.009	mg/L	C	U		UNFI	0.011	mg/L	C	U		NA			
Zinc		NA						NA				FILT	0.004	mg/L	C	U
Zinc	UNFI	0.013	mg/L	C	U		UNFI	0.005	mg/L	C	U		NA			
Volatile Organics																
1,1,1-Trichloroethane	UNFI	10.000	ug/L	D	U		UNFI	10.000	ug/L	C	U		NA			
1,1,2,2-Tetrachloroethane	UNFI	10.000	ug/L	D	U		UNFI	10.000	ug/L	C	U		NA			
1,1,2-Trichloroethane	UNFI	10.000	ug/L	D	U		UNFI	10.000	ug/L	C	U		NA			
1,1-Dichloroethane	UNFI	10.000	ug/L	D	U		UNFI	10.000	ug/L	C	U		NA			
1,1-Dichloroethene	UNFI	10.000	ug/L	D	U		UNFI	10.000	ug/L	C	U		NA			
1,2-Dichloroethane	UNFI	10.000	ug/L	D	U		UNFI	10.000	ug/L	C	U		NA			
1,2-Dichloroethene	UNFI	10.000	ug/L	D	U		UNFI	10.000	ug/L	C	U		NA			
1,2-Dichloropropane	UNFI	10.000	ug/L	D	U		UNFI	10.000	ug/L	C	U		NA			
2-Butanone	UNFI	10.000	ug/L	D	U		UNFI	10.000	ug/L	C	U		NA			
2-Hexanone	UNFI	10.000	ug/L	D	U		UNFI	10.000	ug/L	C	U		NA			
4-Methyl-2-pentanone	UNFI	10.000	ug/L	D	U		UNFI	10.000	ug/L	C	U		NA			
Acetone	UNFI	10.000	ug/L	D	U		UNFI	10.000	ug/L	C	-		NA			
Benzene	UNFI	10.000	ug/L	D	U		UNFI	10.000	ug/L	C	U		NA			
Bromodichloromethane	UNFI	10.000	ug/L	D	U		UNFI	10.000	ug/L	C	U		NA			
Bromoform	UNFI	10.000	ug/L	D	U		UNFI	10.000	ug/L	C	U		NA			
Bromomethane	UNFI	10.000	ug/L	D	U		UNFI	10.000	ug/L	C	U		NA			
Carbon Tetrachloride	UNFI	10.000	ug/L	D	U		UNFI	10.000	ug/L	C	U		NA			
Carbon disulfide	UNFI	10.000	ug/L	D	U		UNFI	10.000	ug/L	C	UJ		NA			
Chlorobenzene	UNFI	10.000	ug/L	D	U		UNFI	10.000	ug/L	C	U		NA			
Chloroethane	UNFI	10.000	ug/L	D	U		UNFI	10.000	ug/L	C	UJ		NA			
Chloroform	UNFI	10.000	ug/L	D	U		UNFI	10.000	ug/L	C	U		NA			
Chloromethane	UNFI	10.000	ug/L	D	U		UNFI	10.000	ug/L	C	UJ		NA			
Dibromochloromethane	UNFI	10.000	ug/L	D	U		UNFI	10.000	ug/L	C	U		NA			
Ethylbenzene	UNFI	10.000	ug/L	D	U		UNFI	10.000	ug/L	C	U		NA			
Methylene chloride	UNFI	10.000	ug/L	D	U		UNFI	10.000	ug/L	C	UJ		NA			
Styrene	UNFI	10.000	ug/L	D	UJ		UNFI	10.000	ug/L	C	U		NA			
Tetrachloroethene	UNFI	10.000	ug/L	D	U		UNFI	10.000	ug/L	C	U		NA			
Toluene	UNFI	10.000	ug/L	D	U		UNFI	10.000	ug/L	C	U		NA			
Trichloroethene	UNFI	10.000	ug/L	D	U		UNFI	10.000	ug/L	C	U		NA			

TABLE F-11A
(Continued)

PHASE II - CHEMICAL PARAMETERS

BORING NUMBER		2046				2065				2065			
SAMPLE NUMBER		116233				112008				113291			
SAMPLING DATE		05/11/93				05/03/93				05/03/93			
CHEMICAL PARAMETERS	FLTD	RESULTS	UNITS	L	VQ	FLTD	RESULTS	UNITS	L	VQ	FLTD	RESULTS	UNITS	L	VQ
Volatile Organics															
Vinyl Acetate	UNFI	10.000	ug/L	D	U	UNFI	10.000	ug/L	C	U		NA			
Vinyl chloride	UNFI	10.000	ug/L	D	U	UNFI	10.000	ug/L	C	U		NA			
Xylenes, Total	UNFI	10.000	ug/L	D	U	UNFI	10.000	ug/L	C	U		NA			
cis-1,3-Dichloropropene	UNFI	10.000	ug/L	D	U	UNFI	10.000	ug/L	C	U		NA			
trans-1,3-Dichloropropene	UNFI	10.000	ug/L	D	U	UNFI	10.000	ug/L	C	U		NA			
Semivolatile Organics															
1,2,4-Trichlorobenzene	UNFI	10.000	ug/L	D	U	UNFI	5.000	ug/L	C	U		NA			
1,2-Dichlorobenzene	UNFI	10.000	ug/L	D	U	UNFI	5.000	ug/L	C	U		NA			
1,3-Dichlorobenzene	UNFI	10.000	ug/L	D	U	UNFI	5.000	ug/L	C	U		NA			
1,4-Dichlorobenzene	UNFI	10.000	ug/L	D	U	UNFI	5.000	ug/L	C	U		NA			
2,4,5-Trichlorophenol	UNFI	25.000	ug/L	D	U	UNFI	12.000	ug/L	C	U		NA			
2,4,6-Trichlorophenol	UNFI	10.000	ug/L	D	U	UNFI	5.000	ug/L	C	U		NA			
2,4-Dichlorophenol	UNFI	10.000	ug/L	D	U	UNFI	5.000	ug/L	C	U		NA			
2,4-Dimethylphenol	UNFI	10.000	ug/L	D	U	UNFI	5.000	ug/L	C	U		NA			
2,4-Dinitrophenol	UNFI	25.000	ug/L	D	U	UNFI	12.000	ug/L	C	UJ		NA			
2,4-Dinitrotoluene	UNFI	10.000	ug/L	D	U	UNFI	5.000	ug/L	C	U		NA			
2,6-Dinitrotoluene	UNFI	10.000	ug/L	D	U	UNFI	5.000	ug/L	C	U		NA			
2-Chloronaphthalene	UNFI	10.000	ug/L	D	U	UNFI	5.000	ug/L	C	U		NA			
2-Chlorophenol	UNFI	10.000	ug/L	D	U	UNFI	5.000	ug/L	C	U		NA			
2-Methylnaphthalene	UNFI	10.000	ug/L	D	U	UNFI	5.000	ug/L	C	U		NA			
2-Methylphenol	UNFI	10.000	ug/L	D	U	UNFI	5.000	ug/L	C	U		NA			
2-Nitroaniline	UNFI	25.000	ug/L	D	U	UNFI	12.000	ug/L	C	U		NA			
2-Nitrophenol	UNFI	10.000	ug/L	D	U	UNFI	5.000	ug/L	C	U		NA			
3,3'-Dichlorobenzidine	UNFI	10.000	ug/L	D	U	UNFI	5.000	ug/L	C	U		NA			
3-Nitroaniline	UNFI	25.000	ug/L	D	U	UNFI	12.000	ug/L	C	U		NA			
4,6-Dinitro-2-methylphenol	UNFI	25.000	ug/L	D	R	UNFI	12.000	ug/L	C	U		NA			
4-Bromophenyl phenyl ether	UNFI	10.000	ug/L	D	U	UNFI	5.000	ug/L	C	U		NA			
4-Chloro-3-methylphenol	UNFI	10.000	ug/L	D	U	UNFI	5.000	ug/L	C	U		NA			
4-Chlorophenylphenyl ether	UNFI	10.000	ug/L	D	U	UNFI	5.000	ug/L	C	U		NA			
4-Methylphenol	UNFI	10.000	ug/L	D	U	UNFI	5.000	ug/L	C	U		NA			
4-Nitroaniline	UNFI	25.000	ug/L	D	R	UNFI	12.000	ug/L	C	U		NA			
4-Nitrophenol	UNFI	25.000	ug/L	D	U	UNFI	12.000	ug/L	C	U		NA			
Acenaphthene	UNFI	10.000	ug/L	D	U	UNFI	5.000	ug/L	C	U		NA			
Acenaphthylene	UNFI	10.000	ug/L	D	U	UNFI	5.000	ug/L	C	U		NA			
Anthracene	UNFI	10.000	ug/L	D	U	UNFI	5.000	ug/L	C	U		NA			
Benzo(a)anthracene	UNFI	10.000	ug/L	D	U	UNFI	5.000	ug/L	C	U		NA			
Benzo(a)pyrene	UNFI	10.000	ug/L	D	U	UNFI	5.000	ug/L	C	U		NA			
Benzo(b)fluoranthene	UNFI	10.000	ug/L	D	U	UNFI	5.000	ug/L	C	U		NA			
Benzo(g,h,i)perylene	UNFI	10.000	ug/L	D	U	UNFI	5.000	ug/L	C	U		NA			
Benzo(k)fluoranthene	UNFI	10.000	ug/L	D	U	UNFI	5.000	ug/L	C	U		NA			

0876

5174

TABLE F-11A
(Continued)

PHASE II - CHEMICAL PARAMETERS

BORING NUMBER		2046				2065				2065			
SAMPLE NUMBER		116233				112008				113291			
SAMPLING DATE		05/11/93				05/03/93				05/03/93			
CHEMICAL PARAMETERS	FLTD	RESULTS	UNITS	L	VQ	FLTD	RESULTS	UNITS	L	VQ	FLTD	RESULTS	UNITS	L	VQ
Semivolatile Organics															
Benzoic acid	UNFI	50.000	ug/L	D	U		NA					NA			
Benzyl alcohol	UNFI	10.000	ug/L	D	U		NA					NA			
Butyl benzyl phthalate	UNFI	10.000	ug/L	D	U	UNFI	5.000	ug/L	C	U		NA			
Carbazole	UNFI	10.000	ug/L	D	U	UNFI	5.000	ug/L	C	U		NA			
Chrysene	UNFI	10.000	ug/L	D	U	UNFI	5.000	ug/L	C	U		NA			
Di-n-butyl phthalate	UNFI	4.000	ug/L	D	J	UNFI	5.000	ug/L	C	U		NA			
Di-n-octyl phthalate	UNFI	10.000	ug/L	D	U	UNFI	5.000	ug/L	C	U		NA			
Dibenzo(a,h)anthracene	UNFI	10.000	ug/L	D	U	UNFI	5.000	ug/L	C	U		NA			
Dibenzofuran	UNFI	10.000	ug/L	D	U	UNFI	5.000	ug/L	C	U		NA			
Diethyl phthalate	UNFI	10.000	ug/L	D	U	UNFI	5.000	ug/L	C	U		NA			
Dimethyl phthalate	UNFI	10.000	ug/L	D	U	UNFI	5.000	ug/L	C	U		NA			
Fluoranthene	UNFI	10.000	ug/L	D	U	UNFI	5.000	ug/L	C	U		NA			
Fluorene	UNFI	10.000	ug/L	D	U	UNFI	5.000	ug/L	C	U		NA			
Hexachlorobenzene	UNFI	10.000	ug/L	D	U	UNFI	5.000	ug/L	C	U		NA			
Hexachlorobutadiene	UNFI	10.000	ug/L	D	U	UNFI	5.000	ug/L	C	U		NA			
Hexachlorocyclopentadiene	UNFI	10.000	ug/L	D	U	UNFI	5.000	ug/L	C	U		NA			
Hexachloroethane	UNFI	10.000	ug/L	D	U	UNFI	5.000	ug/L	C	U		NA			
Indeno(1,2,3-cd)pyrene	UNFI	10.000	ug/L	D	U	UNFI	5.000	ug/L	C	U		NA			
Isophorone	UNFI	10.000	ug/L	D	U	UNFI	5.000	ug/L	C	U		NA			
N-Nitroso-di-n-propylamine	UNFI	10.000	ug/L	D	U	UNFI	5.000	ug/L	C	U		NA			
N-Nitrosodiphenylamine	UNFI	10.000	ug/L	D	U	UNFI	5.000	ug/L	C	U		NA			
Naphthalene	UNFI	10.000	ug/L	D	U	UNFI	5.000	ug/L	C	U		NA			
Nitrobenzene	UNFI	10.000	ug/L	D	U	UNFI	5.000	ug/L	C	U		NA			
Pentachlorophenol	UNFI	25.000	ug/L	D	U	UNFI	12.000	ug/L	C	U		NA			
Phenanthrene	UNFI	10.000	ug/L	D	U	UNFI	5.000	ug/L	C	U		NA			
Phenol	UNFI	10.000	ug/L	D	U	UNFI	5.000	ug/L	C	U		NA			
Pyrene	UNFI	10.000	ug/L	D	U	UNFI	5.000	ug/L	C	U		NA			
bis(2-Chloroethoxy)methane	UNFI	10.000	ug/L	D	U	UNFI	5.000	ug/L	C	U		NA			
bis(2-Chloroethyl)ether	UNFI	10.000	ug/L	D	U	UNFI	5.000	ug/L	C	U		NA			
bis(2-Chloroisopropyl) ether	UNFI	10.000	ug/L	D	UJ	UNFI	5.000	ug/L	C	U		NA			
bis(2-Ethylhexyl) phthalate	UNFI	3.000	ug/L	D	J	UNFI	5.000	ug/L	C	U		NA			
p-Chloroaniline	UNFI	10.000	ug/L	D	U	UNFI	5.000	ug/L	C	U		NA			
Pesticide Organics/PCBs															
4,4'-DDD	UNFI	0.100	ug/L	D	U	UNFI	0.100	ug/L	C	U		NA			
4,4'-DDE	UNFI	0.100	ug/L	D	U	UNFI	0.100	ug/L	C	U		NA			
4,4'-DDT	UNFI	0.100	ug/L	D	U	UNFI	0.100	ug/L	C	U		NA			
Aldrin	UNFI	0.050	ug/L	D	U	UNFI	0.050	ug/L	C	U		NA			
Aroclor-1016	UNFI	1.000	ug/L	D	U	UNFI	1.000	ug/L	C	UJ		NA			
Aroclor-1221	UNFI	2.000	ug/L	D	U	UNFI	2.000	ug/L	C	UJ		NA			
Aroclor-1232	UNFI	1.000	ug/L	D	U	UNFI	1.000	ug/L	C	UJ		NA			

TABLE F-11A
(Continued)

PHASE II - CHEMICAL PARAMETERS

BORING NUMBER		2046				2065				2065			
SAMPLE NUMBER		116233				112008				113291			
SAMPLING DATE		05/11/93				05/03/93				05/03/93			
CHEMICAL PARAMETERS	FLTD	RESULTS	UNITS	L	VQ	FLTD	RESULTS	UNITS	L	VQ	FLTD	RESULTS	UNITS	L	VQ
Pesticide Organics/PCBs															
Aroclor-1242	UNFI	1.000	ug/L	D	U	UNFI	1.000	ug/L	C	UJ		NA			
Aroclor-1248	UNFI	1.000	ug/L	D	U	UNFI	1.000	ug/L	C	UJ		NA			
Aroclor-1254	UNFI	1.000	ug/L	D	U	UNFI	1.000	ug/L	C	UJ		NA			
Aroclor-1260	UNFI	1.000	ug/L	D	U	UNFI	1.000	ug/L	C	UJ		NA			
Dieldrin	UNFI	0.100	ug/L	D	U	UNFI	0.100	ug/L	C	U		NA			
Endosulfan II	UNFI	0.100	ug/L	D	U	UNFI	0.100	ug/L	C	U		NA			
Endosulfan sulfate	UNFI	0.100	ug/L	D	U	UNFI	0.100	ug/L	C	U		NA			
Endosulfan-I	UNFI	0.050	ug/L	D	U	UNFI	0.050	ug/L	C	U		NA			
Endrin	UNFI	0.100	ug/L	D	U	UNFI	0.100	ug/L	C	U		NA			
Endrin aldehyde	UNFI	0.100	ug/L	D	U	UNFI	0.100	ug/L	C	U		NA			
Endrin ketone	UNFI	0.100	ug/L	D	U	UNFI	0.100	ug/L	C	U		NA			
Heptachlor	UNFI	0.050	ug/L	D	U	UNFI	0.050	ug/L	C	U		NA			
Heptachlor epoxide	UNFI	0.050	ug/L	D	U	UNFI	0.050	ug/L	C	U		NA			
Methoxychlor	UNFI	0.500	ug/L	D	U	UNFI	0.500	ug/L	C	U		NA			
Toxaphene	UNFI	5.000	ug/L	D	U	UNFI	5.000	ug/L	C	UJ		NA			
alpha-BHC	UNFI	0.050	ug/L	D	U	UNFI	0.050	ug/L	C	U		NA			
alpha-Chlordane	UNFI	0.050	ug/L	D	U	UNFI	0.050	ug/L	C	U		NA			
beta-BHC	UNFI	0.050	ug/L	D	U	UNFI	0.050	ug/L	C	U		NA			
delta-BHC	UNFI	0.050	ug/L	D	U	UNFI	0.050	ug/L	C	U		NA			
gamma-BHC (Lindane)	UNFI	0.050	ug/L	D	U	UNFI	0.050	ug/L	C	U		NA			
gamma-Chlordane	UNFI	0.050	ug/L	D	U	UNFI	0.050	ug/L	C	U		NA			
General Chemistry															
Alkalinity	UNFI	369.000	mg/L	B	-	UNFI	437.500	mg/L	B	-		NA			
Ammonia	UNFI	0.100	mg/L	B	U	UNFI	0.100	mg/L	B	U		NA			
Chloride	UNFI	20.100	mg/L	B	-	UNFI	19.380	mg/L	B	-		NA			
Fluoride	UNFI	0.150	mg/L	B	-	UNFI	0.110	mg/L	B	-		NA			
Nitrate	UNFI	1.630	mg/L	B	J	UNFI	0.150	mg/L	B	J		NA			
Phenols	UNFI	0.010	mg/L	B	U	UNFI	0.010	mg/L	B	U		NA			
Sulfate	UNFI	73.500	mg/L	B	-	UNFI	18.600	mg/L	B	-		NA			
Sulfide	UNFI	0.050	mg/L	B	U	UNFI	0.500	mg/L	B	U		NA			
Total Kjeldahl Nitrogen	UNFI	0.110	mg/L	B	-	UNFI	0.100	mg/L	B	U		NA			
Total Organic Carbon	UNFI	1.000	mg/L	B	U	UNFI	1.000	mg/L	B	U		NA			
Total Organic Halides	UNFI	0.010	mg/L	B	U	UNFI	0.010	mg/L	B	U		NA			
Total Organic Nitrogen	UNFI	0.110	mg/L	B	-	UNFI	0.100	mg/L	B	U		NA			
Total Phosphorous	UNFI	0.020	mg/L	B	U	UNFI	0.020	mg/L	B	U		NA			

TABLE F-11A
(Continued)

PHASE II - CHEMICAL PARAMETERS

BORING NUMBER		2385				2401				2943			
SAMPLE NUMBER		111998				116229				113003			
SAMPLING DATE		04/28/93				05/11/93				05/05/93			
CHEMICAL PARAMETERS	FLTD	RESULTS	UNITS	L	VQ	FLTD	RESULTS	UNITS	L	VQ	FLTD	RESULTS	UNITS	L	VQ
Inorganics															
Aluminum	FILT	0.084	mg/L	C	U		NA					NA			
Aluminum		NA				UNFI	0.234	mg/L	C	-	UNFI	0.082	mg/L	C	U
Antimony	FILT	0.001	mg/L	C	U		NA					NA			
Antimony		NA				UNFI	0.003	mg/L	C	UJ	UNFI	0.002	mg/L	C	UJ
Arsenic	FILT	0.001	mg/L	C	U		NA					NA			
Arsenic		NA				UNFI	0.001	mg/L	C	-	UNFI	0.001	mg/L	C	U
Barium	FILT	0.069	mg/L	C	-		NA					NA			
Barium		NA				UNFI	0.049	mg/L	C	-	UNFI	0.043	mg/L	C	-
Beryllium	FILT	0.004	mg/L	C	U		NA					NA			
Beryllium		NA				UNFI	0.001	mg/L	C	U	UNFI	0.001	mg/L	C	U
Cadmium	FILT	0.002	mg/L	C	U		NA					NA			
Cadmium		NA				UNFI	0.002	mg/L	C	U	UNFI	0.002	mg/L	C	U
Calcium	FILT	132.000	mg/L	C	-		NA					NA			
Calcium		NA				UNFI	110.000	mg/L	C	-	UNFI	103.000	mg/L	C	-
Chromium	FILT	0.004	mg/L	C	U		NA					NA			
Chromium		NA				UNFI	0.005	mg/L	C	-	UNFI	0.004	mg/L	C	U
Cobalt	FILT	0.003	mg/L	C	U		NA					NA			
Cobalt		NA				UNFI	0.003	mg/L	C	U	UNFI	0.003	mg/L	C	U
Copper	FILT	0.003	mg/L	C	U		NA					NA			
Copper		NA				UNFI	0.005	mg/L	C	U	UNFI	0.002	mg/L	C	U
Cyanide	UNFI	0.001	mg/L	C	U	UNFI	0.001	mg/L	C	U	UNFI	0.001	mg/L	C	U
Iron	FILT	0.009	mg/L	C	U		NA					NA			
Iron		NA				UNFI	0.706	mg/L	C	-	UNFI	0.074	mg/L	C	-
Lead	FILT	0.001	mg/L	C	U		NA					NA			
Lead		NA				UNFI	0.002	mg/L	C	-	UNFI	0.001	mg/L	C	U
Magnesium	FILT	40.300	mg/L	C	-		NA					NA			
Magnesium		NA				UNFI	33.000	mg/L	C	-	UNFI	27.900	mg/L	C	-
Manganese	FILT	0.069	mg/L	C	-		NA					NA			
Manganese		NA				UNFI	0.017	mg/L	C	-	UNFI	0.069	mg/L	C	-
Mercury	FILT	0.000	mg/L	C	U		NA					NA			
Mercury		NA				UNFI	0.000	mg/L	C	U	UNFI	0.000	mg/L	C	U
Molybdenum	FILT	0.003	mg/L	C	U		NA					NA			
Molybdenum		NA				UNFI	0.003	mg/L	C	U	UNFI	0.003	mg/L	C	U
Nickel	FILT	0.004	mg/L	C	-		NA					NA			
Nickel		NA				UNFI	0.007	mg/L	C	-	UNFI	0.003	mg/L	C	U
Potassium	FILT	2.960	mg/L	C	-		NA					NA			
Potassium		NA				UNFI	1.680	mg/L	C	-	UNFI	2.430	mg/L	C	-
Selenium	FILT	0.003	mg/L	C	J		NA					NA			
Selenium		NA				UNFI	0.001	mg/L	C	U	UNFI	0.001	mg/L	C	U
Silicon	FILT	5.790	mg/L	C	-		NA					NA			
Silicon		NA				UNFI	5.140	mg/L	C	-	UNFI	4.470	mg/L	C	-
Silver	FILT	0.002	mg/L	C	U		NA					NA			

TABLE F-11A
(Continued)

PHASE II - CHEMICAL PARAMETERS

BORING NUMBER		2385				2401				2943			
SAMPLE NUMBER		111998				116229				113003			
SAMPLING DATE		04/28/93				05/11/93				05/05/93			
CHEMICAL PARAMETERS	FLTD	RESULTS	UNITS	L	VQ	FLTD	RESULTS	UNITS	L	VQ	FLTD	RESULTS	UNITS	L	VQ
Inorganics															
Silver		NA				UNFI	0.002	mg/L	C	U	UNFI	0.002	mg/L	C	U
Sodium	FILT	11.400	mg/L	C	-		NA					NA			
Sodium		NA				UNFI	10.700	mg/L	C	-	UNFI	6.940	mg/L	C	-
Thallium	FILT	0.001	mg/L	C	U		NA					NA			
Thallium		NA				UNFI	0.001	mg/L	C	U	UNFI	0.001	mg/L	C	U
Vanadium	FILT	0.012	mg/L	C	U		NA					NA			
Vanadium		NA				UNFI	0.008	mg/L	C	U	UNFI	0.008	mg/L	C	U
Zinc	FILT	0.005	mg/L	C	-		NA					NA			
Zinc		NA				UNFI	0.020	mg/L	C	-	UNFI	0.004	mg/L	C	U
Volatile Organics															
1,1,1-Trichloroethane	UNFI	10.000	ug/L	C	U	UNFI	10.000	ug/L	C	U	UNFI	10.000	ug/L	C	U
1,1,2,2-Tetrachloroethane	UNFI	10.000	ug/L	C	U	UNFI	10.000	ug/L	C	U	UNFI	10.000	ug/L	C	U
1,1,2-Trichloroethane	UNFI	10.000	ug/L	C	U	UNFI	10.000	ug/L	C	U	UNFI	10.000	ug/L	C	U
1,1-Dichloroethane	UNFI	10.000	ug/L	C	U	UNFI	10.000	ug/L	C	U	UNFI	10.000	ug/L	C	UJ
1,1-Dichloroethene	UNFI	10.000	ug/L	C	U	UNFI	10.000	ug/L	C	U	UNFI	10.000	ug/L	C	U
1,2-Dichloroethane	UNFI	10.000	ug/L	C	U	UNFI	10.000	ug/L	C	U	UNFI	10.000	ug/L	C	U
1,2-Dichloroethene	UNFI	10.000	ug/L	C	U	UNFI	10.000	ug/L	C	U	UNFI	10.000	ug/L	C	U
1,2-Dichloropropane	UNFI	10.000	ug/L	C	U	UNFI	10.000	ug/L	C	U	UNFI	10.000	ug/L	C	U
2-Butanone	UNFI	10.000	ug/L	C	U	UNFI	10.000	ug/L	C	U	UNFI	10.000	ug/L	C	UJ
2-Hexanone	UNFI	10.000	ug/L	C	UJ	UNFI	10.000	ug/L	C	U	UNFI	10.000	ug/L	C	U
4-Methyl-2-pentanone	UNFI	10.000	ug/L	C	U	UNFI	10.000	ug/L	C	U	UNFI	10.000	ug/L	C	U
Acetone	UNFI	10.000	ug/L	C	U	UNFI	10.000	ug/L	C	U	UNFI	1.000	ug/L	C	R
Benzene	UNFI	10.000	ug/L	C	U	UNFI	10.000	ug/L	C	U	UNFI	10.000	ug/L	C	U
Bromodichloromethane	UNFI	10.000	ug/L	C	U	UNFI	10.000	ug/L	C	U	UNFI	10.000	ug/L	C	U
Bromoform	UNFI	10.000	ug/L	C	U	UNFI	10.000	ug/L	C	U	UNFI	10.000	ug/L	C	U
Bromomethane	UNFI	10.000	ug/L	C	U	UNFI	10.000	ug/L	C	U	UNFI	10.000	ug/L	C	U
Carbon Tetrachloride	UNFI	10.000	ug/L	C	U	UNFI	10.000	ug/L	C	U	UNFI	10.000	ug/L	C	U
Carbon disulfide	UNFI	10.000	ug/L	C	U	UNFI	10.000	ug/L	C	U	UNFI	10.000	ug/L	C	UJ
Chlorobenzene	UNFI	10.000	ug/L	C	U	UNFI	10.000	ug/L	C	U	UNFI	10.000	ug/L	C	U
Chloroethane	UNFI	10.000	ug/L	C	U	UNFI	10.000	ug/L	C	U	UNFI	10.000	ug/L	C	UJ
Chloroform	UNFI	10.000	ug/L	C	U	UNFI	10.000	ug/L	C	U	UNFI	10.000	ug/L	C	U
Chloromethane	UNFI	10.000	ug/L	C	UJ	UNFI	10.000	ug/L	C	U	UNFI	10.000	ug/L	C	R
Dibromochloromethane	UNFI	10.000	ug/L	C	U	UNFI	10.000	ug/L	C	U	UNFI	10.000	ug/L	C	U
Ethylbenzene	UNFI	10.000	ug/L	C	U	UNFI	10.000	ug/L	C	U	UNFI	10.000	ug/L	C	U
Methylene chloride	UNFI	10.000	ug/L	C	UJ	UNFI	10.000	ug/L	C	U	UNFI	10.000	ug/L	C	UJ
Styrene	UNFI	10.000	ug/L	C	U	UNFI	10.000	ug/L	C	U	UNFI	10.000	ug/L	C	U
Tetrachloroethene	UNFI	10.000	ug/L	C	U	UNFI	10.000	ug/L	C	U	UNFI	10.000	ug/L	C	U
Toluene	UNFI	10.000	ug/L	C	U	UNFI	10.000	ug/L	C	U	UNFI	10.000	ug/L	C	U
Trichloroethene	UNFI	10.000	ug/L	C	U	UNFI	10.000	ug/L	C	U	UNFI	10.000	ug/L	C	U
Vinyl Acetate	UNFI	10.000	ug/L	C	U	UNFI	10.000	ug/L	C	U	UNFI	10.000	ug/L	C	UJ

0880

5174
FEMP-OU02-4.RBAFF
February 18, 1994

TABLE F-11A
(Continued)

PHASE II - CHEMICAL PARAMETERS

BORING NUMBER		2385				2401				2943			
SAMPLE NUMBER		111998				116229				113003			
SAMPLING DATE		04/28/93				05/11/93				05/05/93			
CHEMICAL PARAMETERS	FLTD	RESULTS	UNITS	L	VQ	FLTD	RESULTS	UNITS	L	VQ	FLTD	RESULTS	UNITS	L	VQ
Volatile Organics															
Vinyl chloride	UNFI	10.000	ug/L	C	UJ	UNFI	10.000	ug/L	C	U	UNFI	10.000	ug/L	C	UJ
Xylenes, Total	UNFI	10.000	ug/L	C	U	UNFI	10.000	ug/L	C	U	UNFI	10.000	ug/L	C	U
cis-1,3-Dichloropropene	UNFI	10.000	ug/L	C	U	UNFI	10.000	ug/L	C	U	UNFI	10.000	ug/L	C	U
trans-1,3-Dichloropropene	UNFI	10.000	ug/L	C	U	UNFI	10.000	ug/L	C	U	UNFI	10.000	ug/L	C	U
Semivolatile Organics															
1,2,4-Trichlorobenzene	UNFI	10.000	ug/L	C	U	UNFI	10.000	ug/L	C	U	UNFI	10.000	ug/L	C	U
1,2-Dichlorobenzene	UNFI	10.000	ug/L	C	U	UNFI	10.000	ug/L	C	U	UNFI	10.000	ug/L	C	U
1,3-Dichlorobenzene	UNFI	10.000	ug/L	C	U	UNFI	10.000	ug/L	C	U	UNFI	10.000	ug/L	C	U
1,4-Dichlorobenzene	UNFI	10.000	ug/L	C	U	UNFI	10.000	ug/L	C	U	UNFI	10.000	ug/L	C	U
2,4,5-Trichlorophenol	UNFI	25.000	ug/L	C	U	UNFI	25.000	ug/L	C	U	UNFI	25.000	ug/L	C	U
2,4,6-Trichlorophenol	UNFI	10.000	ug/L	C	U	UNFI	10.000	ug/L	C	U	UNFI	10.000	ug/L	C	U
2,4-Dichlorophenol	UNFI	10.000	ug/L	C	U	UNFI	10.000	ug/L	C	U	UNFI	10.000	ug/L	C	U
2,4-Dimethylphenol	UNFI	10.000	ug/L	C	U	UNFI	10.000	ug/L	C	U	UNFI	10.000	ug/L	C	U
2,4-Dinitrophenol	UNFI	25.000	ug/L	C	U	UNFI	25.000	ug/L	C	U	UNFI	25.000	ug/L	C	UJ
2,4-Dinitrotoluene	UNFI	10.000	ug/L	C	U	UNFI	10.000	ug/L	C	U	UNFI	10.000	ug/L	C	U
2,6-Dinitrotoluene	UNFI	10.000	ug/L	C	U	UNFI	10.000	ug/L	C	U	UNFI	10.000	ug/L	C	U
2-Chloronaphthalene	UNFI	10.000	ug/L	C	U	UNFI	10.000	ug/L	C	U	UNFI	10.000	ug/L	C	U
2-Chlorophenol	UNFI	10.000	ug/L	C	U	UNFI	10.000	ug/L	C	U	UNFI	10.000	ug/L	C	U
2-Methylnaphthalene	UNFI	10.000	ug/L	C	U	UNFI	10.000	ug/L	C	U	UNFI	10.000	ug/L	C	U
2-Methylphenol	UNFI	10.000	ug/L	C	U	UNFI	10.000	ug/L	C	U	UNFI	10.000	ug/L	C	U
2-Nitroaniline	UNFI	25.000	ug/L	C	U	UNFI	25.000	ug/L	C	U	UNFI	25.000	ug/L	C	U
2-Nitrophenol	UNFI	10.000	ug/L	C	U	UNFI	10.000	ug/L	C	U	UNFI	10.000	ug/L	C	U
3,3'-Dichlorobenzidine	UNFI	10.000	ug/L	C	UJ	UNFI	10.000	ug/L	C	U	UNFI	10.000	ug/L	C	U
3-Nitroaniline	UNFI	25.000	ug/L	C	UJ	UNFI	25.000	ug/L	C	U	UNFI	25.000	ug/L	C	U
4,6-Dinitro-2-methylphenol	UNFI	25.000	ug/L	C	U	UNFI	25.000	ug/L	C	R	UNFI	25.000	ug/L	C	U
4-Bromophenyl phenyl ether	UNFI	10.000	ug/L	C	U	UNFI	10.000	ug/L	C	U	UNFI	10.000	ug/L	C	U
4-Chloro-3-methylphenol	UNFI	10.000	ug/L	C	U	UNFI	10.000	ug/L	C	U	UNFI	10.000	ug/L	C	U
4-Chlorophenylphenyl ether	UNFI	10.000	ug/L	C	U	UNFI	10.000	ug/L	C	U	UNFI	10.000	ug/L	C	U
4-Methylphenol	UNFI	10.000	ug/L	C	U	UNFI	10.000	ug/L	C	U	UNFI	10.000	ug/L	C	U
4-Nitroaniline	UNFI	25.000	ug/L	C	R	UNFI	25.000	ug/L	C	R	UNFI	25.000	ug/L	C	U
4-Nitrophenol	UNFI	25.000	ug/L	C	R	UNFI	25.000	ug/L	C	U	UNFI	25.000	ug/L	C	UJ
Acenaphthene	UNFI	10.000	ug/L	C	U	UNFI	10.000	ug/L	C	U	UNFI	10.000	ug/L	C	U
Acenaphthylene	UNFI	10.000	ug/L	C	U	UNFI	10.000	ug/L	C	U	UNFI	10.000	ug/L	C	U
Anthracene	UNFI	10.000	ug/L	C	U	UNFI	10.000	ug/L	C	U	UNFI	10.000	ug/L	C	U
Benzo(a)anthracene	UNFI	10.000	ug/L	C	U	UNFI	10.000	ug/L	C	U	UNFI	10.000	ug/L	C	U
Benzo(a)pyrene	UNFI	10.000	ug/L	C	U	UNFI	10.000	ug/L	C	U	UNFI	10.000	ug/L	C	U
Benzo(b)fluoranthene	UNFI	10.000	ug/L	C	U	UNFI	10.000	ug/L	C	U	UNFI	10.000	ug/L	C	U
Benzo(g,h,i)perylene	UNFI	10.000	ug/L	C	U	UNFI	10.000	ug/L	C	U	UNFI	10.000	ug/L	C	U
Benzo(k)fluoranthene	UNFI	10.000	ug/L	C	UJ	UNFI	10.000	ug/L	C	U	UNFI	10.000	ug/L	C	U
Benzoic acid	UNFI	50.000	ug/L	C	U	UNFI	50.000	ug/L	C	U	UNFI	50.000	ug/L	C	UJ

TABLE F-11A
(Continued)

PHASE II - CHEMICAL PARAMETERS

BORING NUMBER		2385				2401				2943			
SAMPLE NUMBER		111998				116229				113003			
SAMPLING DATE		04/28/93				05/11/93				05/05/93			
CHEMICAL PARAMETERS	FLTD	RESULTS	UNITS	L	VQ	FLTD	RESULTS	UNITS	L	VQ	FLTD	RESULTS	UNITS	L	VQ
Semivolatile Organics															
Benzyl alcohol	UNFI	10.000	ug/L	C	U	UNFI	10.000	ug/L	C	U	UNFI	10.000	ug/L	C	U
Butyl benzyl phthalate	UNFI	10.000	ug/L	C	U	UNFI	10.000	ug/L	C	U	UNFI	10.000	ug/L	C	U
Carbazole	UNFI	10.000	ug/L	C	U	UNFI	10.000	ug/L	C	U	UNFI	10.000	ug/L	C	U
Chrysene	UNFI	10.000	ug/L	C	U	UNFI	10.000	ug/L	C	U	UNFI	10.000	ug/L	C	U
Di-n-butyl phthalate	UNFI	10.000	ug/L	C	UJ	UNFI	5.000	ug/L	C	J	UNFI	10.000	ug/L	C	U
Di-n-octyl phthalate	UNFI	10.000	ug/L	C	UJ	UNFI	10.000	ug/L	C	U	UNFI	10.000	ug/L	C	UJ
Dibenzo(a,h)anthracene	UNFI	10.000	ug/L	C	U	UNFI	10.000	ug/L	C	U	UNFI	10.000	ug/L	C	U
Dibenzofuran	UNFI	10.000	ug/L	C	U	UNFI	10.000	ug/L	C	U	UNFI	10.000	ug/L	C	U
Diethyl phthalate	UNFI	10.000	ug/L	C	UJ	UNFI	10.000	ug/L	C	U	UNFI	10.000	ug/L	C	U
Dimethyl phthalate	UNFI	10.000	ug/L	C	U	UNFI	10.000	ug/L	C	U	UNFI	10.000	ug/L	C	U
Fluoranthene	UNFI	10.000	ug/L	C	U	UNFI	10.000	ug/L	C	U	UNFI	10.000	ug/L	C	U
Fluorene	UNFI	10.000	ug/L	C	U	UNFI	10.000	ug/L	C	U	UNFI	10.000	ug/L	C	U
Hexachlorobenzene	UNFI	10.000	ug/L	C	U	UNFI	10.000	ug/L	C	U	UNFI	10.000	ug/L	C	U
Hexachlorobutadiene	UNFI	10.000	ug/L	C	UJ	UNFI	10.000	ug/L	C	U	UNFI	10.000	ug/L	C	U
Hexachlorocyclopentadiene	UNFI	10.000	ug/L	C	U	UNFI	10.000	ug/L	C	U	UNFI	10.000	ug/L	C	UJ
Hexachloroethane	UNFI	10.000	ug/L	C	U	UNFI	10.000	ug/L	C	U	UNFI	10.000	ug/L	C	U
Indeno(1,2,3-cd)pyrene	UNFI	10.000	ug/L	C	U	UNFI	10.000	ug/L	C	U	UNFI	10.000	ug/L	C	U
Isophorone	UNFI	10.000	ug/L	C	U	UNFI	10.000	ug/L	C	U	UNFI	10.000	ug/L	C	U
N-Nitroso-di-n-propylamine	UNFI	10.000	ug/L	C	U	UNFI	10.000	ug/L	C	U	UNFI	10.000	ug/L	C	U
N-Nitrosodiphenylamine	UNFI	10.000	ug/L	C	U	UNFI	10.000	ug/L	C	U	UNFI	10.000	ug/L	C	U
Naphthalene	UNFI	10.000	ug/L	C	U	UNFI	10.000	ug/L	C	U	UNFI	10.000	ug/L	C	U
Nitrobenzene	UNFI	10.000	ug/L	C	U	UNFI	10.000	ug/L	C	U	UNFI	10.000	ug/L	C	U
Pentachlorophenol	UNFI	25.000	ug/L	C	U	UNFI	25.000	ug/L	C	U	UNFI	25.000	ug/L	C	U
Phenanthrene	UNFI	10.000	ug/L	C	U	UNFI	10.000	ug/L	C	U	UNFI	10.000	ug/L	C	U
Phenol	UNFI	10.000	ug/L	C	U	UNFI	10.000	ug/L	C	U	UNFI	10.000	ug/L	C	U
Pyrene	UNFI	10.000	ug/L	C	U	UNFI	10.000	ug/L	C	U	UNFI	10.000	ug/L	C	U
bis(2-Chloroethoxy)methane	UNFI	10.000	ug/L	C	U	UNFI	10.000	ug/L	C	U	UNFI	10.000	ug/L	C	U
bis(2-Chloroethyl)ether	UNFI	10.000	ug/L	C	U	UNFI	10.000	ug/L	C	U	UNFI	10.000	ug/L	C	U
bis(2-Chloroisopropyl) ether	UNFI	10.000	ug/L	C	UJ	UNFI	10.000	ug/L	C	UJ	UNFI	10.000	ug/L	C	UJ
bis(2-Ethylhexyl) phthalate	UNFI	10.000	ug/L	C	U	UNFI	2.000	ug/L	C	J	UNFI	10.000	ug/L	C	U
p-Chloroaniline	UNFI	10.000	ug/L	C	R	UNFI	10.000	ug/L	C	U	UNFI	10.000	ug/L	C	U
Pesticide Organics/PCBs															
4,4'-DDD	UNFI	0.100	ug/L	C	U	UNFI	0.100	ug/L	C	U	UNFI	0.100	ug/L	C	U
4,4'-DDE	UNFI	0.100	ug/L	C	U	UNFI	0.100	ug/L	C	U	UNFI	0.100	ug/L	C	U
4,4'-DDT	UNFI	0.100	ug/L	C	U	UNFI	0.100	ug/L	C	U	UNFI	0.100	ug/L	C	UJ
Aldrin	UNFI	0.050	ug/L	C	U	UNFI	0.050	ug/L	C	U	UNFI	0.050	ug/L	C	U
Aroclor-1016	UNFI	1.000	ug/L	C	U	UNFI	1.000	ug/L	C	U	UNFI	1.000	ug/L	C	U
Aroclor-1221	UNFI	2.000	ug/L	C	U	UNFI	2.000	ug/L	C	U	UNFI	2.000	ug/L	C	U
Aroclor-1232	UNFI	1.000	ug/L	C	U	UNFI	1.000	ug/L	C	U	UNFI	1.000	ug/L	C	U
Aroclor-1242	UNFI	1.000	ug/L	C	U	UNFI	1.000	ug/L	C	U	UNFI	1.000	ug/L	C	U

0882

5174

TABLE F-11A
(Continued)

PHASE II - CHEMICAL PARAMETERS

BORING NUMBER		2385				2401				2943			
SAMPLE NUMBER		111998				116229				113003			
SAMPLING DATE		04/28/93				05/11/93				05/05/93			
CHEMICAL PARAMETERS	FLTD	RESULTS	UNITS	L	VQ	FLTD	RESULTS	UNITS	L VQ	FLTD	RESULTS	UNITS	L VQ
Pesticide Organics/PCBs													
Aroclor-1248	UNFI	1.000	ug/L	C	U	UNFI	1.000	ug/L	C U	UNFI	1.000	ug/L	C U
Aroclor-1254	UNFI	1.000	ug/L	C	U	UNFI	1.000	ug/L	C U	UNFI	1.000	ug/L	C U
Aroclor-1260	UNFI	1.000	ug/L	C	U	UNFI	1.000	ug/L	C U	UNFI	1.000	ug/L	C U
Dieldrin	UNFI	0.100	ug/L	C	U	UNFI	0.100	ug/L	C U	UNFI	0.100	ug/L	C U
Endosulfan II	UNFI	0.100	ug/L	C	U	UNFI	0.100	ug/L	C U	UNFI	0.100	ug/L	C U
Endosulfan sulfate	UNFI	0.100	ug/L	C	U	UNFI	0.100	ug/L	C U	UNFI	0.100	ug/L	C U
Endosulfan-I	UNFI	0.050	ug/L	C	U	UNFI	0.050	ug/L	C U	UNFI	0.050	ug/L	C U
Endrin	UNFI	0.100	ug/L	C	U	UNFI	0.100	ug/L	C U	UNFI	0.100	ug/L	C U
Endrin aldehyde	UNFI	0.100	ug/L	C	U	UNFI	0.100	ug/L	C U	UNFI	0.100	ug/L	C U
Endrin ketone	UNFI	0.100	ug/L	C	U	UNFI	0.100	ug/L	C U	UNFI	0.100	ug/L	C U
Heptachlor	UNFI	0.050	ug/L	C	U	UNFI	0.050	ug/L	C U	UNFI	0.050	ug/L	C U
Heptachlor epoxide	UNFI	0.050	ug/L	C	U	UNFI	0.050	ug/L	C U	UNFI	0.050	ug/L	C U
Methoxychlor	UNFI	0.500	ug/L	C	U	UNFI	0.500	ug/L	C U	UNFI	0.500	ug/L	C U
Toxaphene	UNFI	5.000	ug/L	C	U	UNFI	5.000	ug/L	C U	UNFI	5.000	ug/L	C U
alpha-BHC	UNFI	0.050	ug/L	C	U	UNFI	0.050	ug/L	C U	UNFI	0.050	ug/L	C UJ
alpha-Chlordane	UNFI	0.050	ug/L	C	U	UNFI	0.050	ug/L	C U	UNFI	0.050	ug/L	C U
beta-BHC	UNFI	0.050	ug/L	C	U	UNFI	0.050	ug/L	C U	UNFI	0.050	ug/L	C U
delta-BHC	UNFI	0.050	ug/L	C	U	UNFI	0.050	ug/L	C U	UNFI	0.050	ug/L	C UJ
gamma-BHC (Lindane)	UNFI	0.050	ug/L	C	U	UNFI	0.050	ug/L	C U	UNFI	0.050	ug/L	C UJ
gamma-Chlordane	UNFI	0.050	ug/L	C	U	UNFI	0.050	ug/L	C U	UNFI	0.050	ug/L	C U
General Chemistry													
Alkalinity		NA				UNFI	339.000	mg/kg	B -	UNFI	325.500	mg/L	B -
Alkalinity as CaCO3	UNFI	370.000	mg/L	B	-		NA				NA		
Ammonia	UNFI	0.100	mg/L	B	U	UNFI	0.100	mg/kg	B U	UNFI	0.120	mg/L	B -
Chloride	UNFI	21.030	mg/L	B	-	UNFI	23.600	mg/kg	B -	UNFI	10.690	mg/L	B -
Fluoride	UNFI	0.120	mg/L	B	-	UNFI	0.200	mg/kg	B -	UNFI	0.140	mg/L	B -
Nitrate	UNFI	1.570	mg/L	B	J		NA			UNFI	1.130	mg/L	B J
Phenols	UNFI	0.010	mg/L	B	U	UNFI	0.010	mg/kg	B U	UNFI	0.010	mg/L	B U
Phosphorus	UNFI	0.060	mg/L	B	-		NA				NA		
Sulfate	UNFI	87.700	mg/L	B	-	UNFI	53.500	mg/kg	B -	UNFI	43.700	mg/L	B -
Sulfide	UNFI	0.500	mg/L	B	U	UNFI	0.500	mg/kg	B U	UNFI	0.500	mg/L	B U
Total Kjeldahl Nitrogen	UNFI	0.190	mg/L	B	-	UNFI	0.160	mg/kg	B -	UNFI	0.100	mg/L	B -
Total Organic Carbon	UNFI	1.000	mg/L	B	U	UNFI	1.000	mg/kg	B U	UNFI	1.000	mg/L	B U
Total Organic Halides	UNFI	0.010	mg/L	B	U	UNFI	10.000	mg/kg	B U	UNFI	0.010	mg/L	B R
Total Organic Nitrogen	UNFI	0.190	mg/L	B	-	UNFI	0.160	mg/kg	B -	UNFI	0.100	mg/L	B U
Total Phosphorous		NA				UNFI	0.070	mg/kg	B -	UNFI	0.050	mg/L	B -

TABLE F-11A
(Continued)

PHASE II - CHEMICAL PARAMETERS

BORING NUMBER	2943					2943					2944				
SAMPLE NUMBER	113314					113315 DUPLICATE					113866				
SAMPLING DATE	05/27/93					05/27/93					06/30/93				
CHEMICAL PARAMETERS	FLTD	RESULTS	UNITS	L	VQ	FLTD	RESULTS	UNITS	L	VQ	FLTD	RESULTS	UNITS	L	VQ
Inorganics															
Aluminum		NA					NA				FILT	0.200	mg/L	C	U
Aluminum	UNFI	0.906	mg/L	C	J	UNFI	0.567	mg/L	C	UJ	UNFI	5.110	mg/L	C	-
Antimony		NA					NA				FILT	0.005	mg/L	C	UJ
Antimony	UNFI	0.005	mg/L	C	U	UNFI	0.005	mg/L	C	U	UNFI	0.005	mg/L	C	J
Arsenic		NA					NA				FILT	0.002	mg/L	C	UJ
Arsenic	UNFI	0.003	mg/L	C	-	UNFI	0.002	mg/L	C	U	UNFI	0.004	mg/L	C	J
Barium		NA					NA				FILT	0.033	mg/L	C	-
Barium	UNFI	0.037	mg/L	C	-	UNFI	0.040	mg/L	C	-	UNFI	0.062	mg/L	C	-
Beryllium		NA					NA				FILT	0.002	mg/L	C	-
Beryllium	UNFI	0.002	mg/L	C	U	UNFI	0.002	mg/L	C	U	UNFI	0.002	mg/L	C	U
Cadmium		NA					NA				FILT	0.005	mg/L	C	UJ
Cadmium	UNFI	0.005	mg/L	C	U	UNFI	0.005	mg/L	C	U	UNFI	0.005	mg/L	C	UJ
Calcium		NA					NA				FILT	127.000	mg/L	C	-
Calcium	UNFI	101.000	mg/L	C	-	UNFI	105.000	mg/L	C	-	UNFI	198.000	mg/L	C	-
Chromium		NA					NA				FILT	0.010	mg/L	C	R
Chromium	UNFI	0.010	mg/L	C	U	UNFI	0.010	mg/L	C	U	UNFI	0.024	mg/L	C	J
Cobalt		NA					NA				FILT	0.010	mg/L	C	U
Cobalt	UNFI	0.010	mg/L	C	U	UNFI	0.010	mg/L	C	U	UNFI	0.010	mg/L	C	U
Copper		NA					NA				FILT	0.010	mg/L	C	U
Copper	UNFI	0.010	mg/L	C	UJ	UNFI	0.010	mg/L	C	UJ	UNFI	0.030	mg/L	C	-
Cyanide		NA					NA				UNFI	0.002	mg/L	C	U
Iron		NA					NA				FILT	0.020	mg/L	C	U
Iron	UNFI	2.170	mg/L	C	J	UNFI	0.963	mg/L	C	J	UNFI	15.100	mg/L	C	-
Lead		NA					NA				FILT	0.002	mg/L	C	U
Lead	UNFI	0.003	mg/L	C	J	UNFI	0.002	mg/L	C	UJ	UNFI	0.016	mg/L	C	-
Magnesium		NA					NA				FILT	32.300	mg/L	C	-
Magnesium	UNFI	28.800	mg/L	C	-	UNFI	29.800	mg/L	C	-	UNFI	60.200	mg/L	C	-
Manganese		NA					NA				FILT	0.083	mg/L	C	-
Manganese	UNFI	0.080	mg/L	C	J	UNFI	0.058	mg/L	C	J	UNFI	0.353	mg/L	C	-
Mercury		NA					NA				FILT	0.000	mg/L	C	U
Mercury	UNFI	0.000	mg/L	C	U	UNFI	0.000	mg/L	C	U	UNFI	0.000	mg/L	C	U
Molybdenum		NA					NA				FILT	0.020	mg/L	C	U
Molybdenum	UNFI	0.010	mg/L	C	U	UNFI	0.010	mg/L	C	U	UNFI	0.020	mg/L	C	U
Nickel		NA					NA				FILT	0.020	mg/L	C	U
Nickel	UNFI	0.020	mg/L	C	U	UNFI	0.020	mg/L	C	U	UNFI	0.020	mg/L	C	U
Potassium		NA					NA				FILT	1.880	mg/L	C	-
Potassium	UNFI	2.280	mg/L	C	-	UNFI	2.400	mg/L	C	-	UNFI	3.180	mg/L	C	-
Selenium		NA					NA				FILT	0.002	mg/L	C	UJ
Selenium	UNFI	0.002	mg/L	C	U	UNFI	0.002	mg/L	C	U	UNFI	0.002	mg/L	C	UJ
Silicon		NA					NA				FILT	4.680	mg/L	C	-
Silicon	UNFI	4.990	mg/L	C	-	UNFI	5.040	mg/L	C	-	UNFI	12.800	mg/L	C	-
Silver		NA					NA				FILT	0.010	mg/L	C	U

TABLE F-11A
(Continued)

PHASE II - CHEMICAL PARAMETERS

BORING NUMBER		2943				2943				2944			
SAMPLE NUMBER		113314				113315 DUPLICATE				113866			
SAMPLING DATE		05/27/93				05/27/93				06/30/93			
CHEMICAL PARAMETERS	FLTD	RESULTS	UNITS	L	VQ	FLTD	RESULTS	UNITS	L	VQ	FLTD	RESULTS	UNITS	L	VQ
Inorganics															
Silver	UNFI	0.010	mg/L	C	U	UNFI	0.010	mg/L	C	U	UNFI	0.010	mg/L	C	U
Sodium		NA					NA				FILT	6.210	mg/L	C	-
Sodium	UNFI	5.810	mg/L	C	-	UNFI	6.460	mg/L	C	-	UNFI	6.950	mg/L	C	-
Thallium		NA					NA				FILT	0.002	mg/L	C	UJ
Thallium	UNFI	0.002	mg/L	C	U	UNFI	0.002	mg/L	C	U	UNFI	0.002	mg/L	C	UJ
Vanadium		NA					NA				FILT	0.010	mg/L	C	R
Vanadium	UNFI	0.010	mg/L	C	U	UNFI	0.010	mg/L	C	U	UNFI	0.019	mg/L	C	J
Zinc		NA					NA				FILT	0.005	mg/L	C	U
Zinc	UNFI	0.011	mg/L	C	-	UNFI	0.011	mg/L	C	-	UNFI	0.080	mg/L	C	-
Volatile Organics															
1,1,1-Trichloroethane		NA					NA				UNFI	10.000	ug/L	C	U
1,1,2,2-Tetrachloroethane		NA					NA				UNFI	10.000	ug/L	C	U
1,1,2-Trichloroethane		NA					NA				UNFI	10.000	ug/L	C	U
1,1-Dichloroethane		NA					NA				UNFI	10.000	ug/L	C	U
1,1-Dichloroethene		NA					NA				UNFI	10.000	ug/L	C	U
1,2-Dichloroethane		NA					NA				UNFI	10.000	ug/L	C	U
1,2-Dichloroethene		NA					NA				UNFI	10.000	ug/L	C	U
1,2-Dichloropropane		NA					NA				UNFI	10.000	ug/L	C	U
2-Butanone		NA					NA				UNFI	10.000	ug/L	C	U
2-Hexanone		NA					NA				UNFI	10.000	ug/L	C	U
4-Methyl-2-pentanone		NA					NA				UNFI	10.000	ug/L	C	U
Acetone		NA					NA				UNFI	10.000	ug/L	C	U
Benzene		NA					NA				UNFI	10.000	ug/L	C	U
Bromodichloromethane		NA					NA				UNFI	10.000	ug/L	C	U
Bromoform		NA					NA				UNFI	10.000	ug/L	C	U
Bromomethane		NA					NA				UNFI	10.000	ug/L	C	U
Carbon Tetrachloride		NA					NA				UNFI	10.000	ug/L	C	U
Carbon disulfide		NA					NA				UNFI	10.000	ug/L	C	U
Chlorobenzene		NA					NA				UNFI	10.000	ug/L	C	U
Chloroethane		NA					NA				UNFI	10.000	ug/L	C	U
Chloroform		NA					NA				UNFI	10.000	ug/L	C	U
Chloromethane		NA					NA				UNFI	10.000	ug/L	C	U
Dibromochloromethane		NA					NA				UNFI	10.000	ug/L	C	U
Ethylbenzene		NA					NA				UNFI	10.000	ug/L	C	U
Methylene chloride		NA					NA				UNFI	10.000	ug/L	C	UJ
Styrene		NA					NA				UNFI	10.000	ug/L	C	U
Tetrachloroethene		NA					NA				UNFI	10.000	ug/L	C	U
Toluene		NA					NA				UNFI	10.000	ug/L	C	U
Trichloroethene		NA					NA				UNFI	10.000	ug/L	C	U
Vinyl chloride		NA					NA				UNFI	10.000	ug/L	C	U

0885

TABLE F-11A
(Continued)

PHASE II - CHEMICAL PARAMETERS

BORING NUMBER		2943				2943				2944			
SAMPLE NUMBER		113314				113315 DUPLICATE				113866			
SAMPLING DATE		05/27/93				05/27/93				06/30/93			
CHEMICAL PARAMETERS	FLTD	RESULTS	UNITS	L	VQ	FLTD	RESULTS	UNITS	L	VQ	FLTD	RESULTS	UNITS	L	VQ
Volatile Organics															
Xylenes, Total		NA					NA				UNFI	10.000	ug/L	C	U
cis-1,3-Dichloropropene		NA					NA				UNFI	10.000	ug/L	C	U
trans-1,3-Dichloropropene		NA					NA				UNFI	10.000	ug/L	C	U
Semivolatile Organics															
1,2,4-Trichlorobenzene		NA					NA				UNFI	10.000	ug/L	C	U
1,2-Dichlorobenzene		NA					NA				UNFI	10.000	ug/L	C	U
1,3-Dichlorobenzene		NA					NA				UNFI	10.000	ug/L	C	U
1,4-Dichlorobenzene		NA					NA				UNFI	10.000	ug/L	C	U
2,4,5-Trichlorophenol		NA					NA				UNFI	25.000	ug/L	C	U
2,4,6-Trichlorophenol		NA					NA				UNFI	10.000	ug/L	C	U
2,4-Dichlorophenol		NA					NA				UNFI	10.000	ug/L	C	U
2,4-Dimethylphenol		NA					NA				UNFI	10.000	ug/L	C	U
2,4-Dinitrophenol		NA					NA				UNFI	25.000	ug/L	C	UJ
2,4-Dinitrotoluene		NA					NA				UNFI	10.000	ug/L	C	U
2,6-Dinitrotoluene		NA					NA				UNFI	10.000	ug/L	C	U
2-Benzyl-4-chlorophenol		NA					NA				UNFI	10.000	ug/L	C	U
2-Chloronaphthalene		NA					NA				UNFI	10.000	ug/L	C	U
2-Chlorophenol		NA					NA				UNFI	10.000	ug/L	C	U
2-Methylnaphthalene		NA					NA				UNFI	10.000	ug/L	C	U
2-Methylphenol		NA					NA				UNFI	10.000	ug/L	C	U
2-Nitroaniline		NA					NA				UNFI	25.000	ug/L	C	U
2-Nitrophenol		NA					NA				UNFI	10.000	ug/L	C	U
3,3'-Dichlorobenzidine		NA					NA				UNFI	10.000	ug/L	C	U
3-Nitroaniline		NA					NA				UNFI	25.000	ug/L	C	U
4,6-Dinitro-2-methylphenol		NA					NA				UNFI	25.000	ug/L	C	U
4-Bromophenyl phenyl ether		NA					NA				UNFI	10.000	ug/L	C	U
4-Chloro-3-methylphenol		NA					NA				UNFI	10.000	ug/L	C	U
4-Chlorophenylphenyl ether		NA					NA				UNFI	10.000	ug/L	C	U
4-Methylphenol		NA					NA				UNFI	10.000	ug/L	C	U
4-Nitroaniline		NA					NA				UNFI	25.000	ug/L	C	U
4-Nitrophenol		NA					NA				UNFI	25.000	ug/L	C	U
Acenaphthene		NA					NA				UNFI	10.000	ug/L	C	U
Acenaphthylene		NA					NA				UNFI	10.000	ug/L	C	U
Anthracene		NA					NA				UNFI	10.000	ug/L	C	U
Benzo(a)anthracene		NA					NA				UNFI	10.000	ug/L	C	U
Benzo(a)pyrene		NA					NA				UNFI	10.000	ug/L	C	U
Benzo(b)fluoranthene		NA					NA				UNFI	10.000	ug/L	C	U
Benzo(g,h,i)perylene		NA					NA				UNFI	10.000	ug/L	C	U
Benzo(k)fluoranthene		NA					NA				UNFI	10.000	ug/L	C	U
Benzoic acid		NA					NA				UNFI	50.000	ug/L	C	U

0886

5174

TABLE F-11A
(Continued)

PHASE II - CHEMICAL PARAMETERS

BORING NUMBER		2943				2943				2944			
SAMPLE NUMBER		113314				113315 DUPLICATE				113866			
SAMPLING DATE		05/27/93				05/27/93				06/30/93			
CHEMICAL PARAMETERS	FLTD	RESULTS	UNITS	L	VQ	FLTD	RESULTS	UNITS	L	VQ	FLTD	RESULTS	UNITS	L	VQ
Semivolatile Organics															
Benzyl alcohol		NA					NA				UNFI	10.000	ug/L	C	U
Butyl benzyl phthalate		NA					NA				UNFI	10.000	ug/L	C	U
Carbazole		NA					NA				UNFI	10.000	ug/L	C	U
Chrysene		NA					NA				UNFI	10.000	ug/L	C	U
Di-n-butyl phthalate		NA					NA				UNFI	10.000	ug/L	C	U
Di-n-octyl phthalate		NA					NA				UNFI	10.000	ug/L	C	U
Dibenzo(a,h)anthracene		NA					NA				UNFI	10.000	ug/L	C	U
Dibenzofuran		NA					NA				UNFI	10.000	ug/L	C	U
Diethyl phthalate		NA					NA				UNFI	10.000	ug/L	C	U
Dimethyl phthalate		NA					NA				UNFI	10.000	ug/L	C	U
Fluoranthene		NA					NA				UNFI	10.000	ug/L	C	U
Fluorene		NA					NA				UNFI	10.000	ug/L	C	U
Hexachlorobenzene		NA					NA				UNFI	10.000	ug/L	C	U
Hexachlorobutadiene		NA					NA				UNFI	10.000	ug/L	C	U
Hexachlorocyclopentadiene		NA					NA				UNFI	10.000	ug/L	C	UJ
Hexachloroethane		NA					NA				UNFI	10.000	ug/L	C	U
Indeno(1,2,3-cd)pyrene		NA					NA				UNFI	10.000	ug/L	C	U
Isophorone		NA					NA				UNFI	10.000	ug/L	C	U
N-Nitroso-di-n-propylamine		NA					NA				UNFI	10.000	ug/L	C	U
N-Nitrosodimethylamine		NA					NA				UNFI	10.000	ug/L	C	U
N-Nitrosodiphenylamine		NA					NA				UNFI	10.000	ug/L	C	U
Naphthalene		NA					NA				UNFI	10.000	ug/L	C	U
Nitrobenzene		NA					NA				UNFI	10.000	ug/L	C	U
Pentachlorophenol		NA					NA				UNFI	25.000	ug/L	C	U
Phenanthrene		NA					NA				UNFI	10.000	ug/L	C	U
Phenol		NA					NA				UNFI	10.000	ug/L	C	U
Pyrene		NA					NA				UNFI	10.000	ug/L	C	U
Tributyl phosphate		NA					NA				UNFI	10.000	ug/L	C	UJ
bis(2-Chloroethoxy)methane		NA					NA				UNFI	10.000	ug/L	C	U
bis(2-Chloroethyl)ether		NA					NA				UNFI	10.000	ug/L	C	U
bis(2-Chloroisopropyl) ether		NA					NA				UNFI	10.000	ug/L	C	U
bis(2-Ethylhexyl) phthalate		NA					NA				UNFI	10.000	ug/L	C	U
p-Chloroaniline		NA					NA				UNFI	10.000	ug/L	C	U
Pesticide Organics/PCBs															
4,4'-DDD		NA					NA				UNFI	0.100	ug/L	C	U
4,4'-DDE		NA					NA				UNFI	0.100	ug/L	C	U
4,4'-DDT		NA					NA				UNFI	0.100	ug/L	C	U
Aldrin		NA					NA				UNFI	0.050	ug/L	C	U
Aroclor-1016		NA					NA				UNFI	1.000	ug/L	C	U
Aroclor-1221		NA					NA				UNFI	2.000	ug/L	C	U

TABLE F-11A
(Continued)

PHASE II - CHEMICAL PARAMETERS

BORING NUMBER		2943				2943				2944			
SAMPLE NUMBER		113314				113315 DUPLICATE				113866			
SAMPLING DATE		05/27/93				05/27/93				06/30/93			
CHEMICAL PARAMETERS	FLTD	RESULTS	UNITS	L	VQ	FLTD	RESULTS	UNITS	L	VQ	FLTD	RESULTS	UNITS	L	VQ
Pesticide Organics/PCBs															
Aroclor-1232		NA					NA				UNFI	1.000	ug/L	C	U
Aroclor-1242		NA					NA				UNFI	1.000	ug/L	C	U
Aroclor-1248		NA					NA				UNFI	1.000	ug/L	C	U
Aroclor-1254		NA					NA				UNFI	1.000	ug/L	C	U
Aroclor-1260		NA					NA				UNFI	1.000	ug/L	C	U
Dieldrin		NA					NA				UNFI	0.100	ug/L	C	U
Endosulfan II		NA					NA				UNFI	0.100	ug/L	C	U
Endosulfan sulfate		NA					NA				UNFI	0.100	ug/L	C	U
Endosulfan-I		NA					NA				UNFI	0.050	ug/L	C	U
Endrin		NA					NA				UNFI	0.100	ug/L	C	U
Endrin aldehyde		NA					NA				UNFI	0.100	ug/L	C	U
Endrin ketone		NA					NA				UNFI	0.100	ug/L	C	U
Heptachlor		NA					NA				UNFI	0.050	ug/L	C	U
Heptachlor epoxide		NA					NA				UNFI	0.050	ug/L	C	U
Methoxychlor		NA					NA				UNFI	0.500	ug/L	C	U
Toxaphene		NA					NA				UNFI	5.000	ug/L	C	U
alpha-BHC		NA					NA				UNFI	0.050	ug/L	C	U
alpha-Chlordane		NA					NA				UNFI	0.050	ug/L	C	U
beta-BHC		NA					NA				UNFI	0.050	ug/L	C	U
delta-BHC		NA					NA				UNFI	0.050	ug/L	C	U
gamma-BHC (Lindane)		NA					NA				UNFI	0.050	ug/L	C	U
gamma-Chlordane		NA					NA				UNFI	0.050	ug/L	C	U
General Chemistry															
Alkalinity		NA					NA				UNFI	412.000	mg/L	B	-
Ammonia		NA					NA				UNFI	0.100	mg/L	B	U
Chloride		NA					NA				UNFI	5.680	mg/L	B	-
Fluoride		NA					NA				UNFI	0.150	mg/L	B	-
Nitrate		NA					NA				UNFI	0.980	mg/L	B	J
Phenols		NA					NA				UNFI	0.010	mg/L	B	U
Sulfate		NA					NA				UNFI	46.700	mg/L	B	-
Sulfide		NA					NA				UNFI	0.500	mg/L	B	U
Total Kjeldahl Nitrogen		NA					NA				UNFI	0.240	mg/L	B	-
Total Organic Carbon		NA					NA				UNFI	1.000	mg/L	B	U
Total Organic Halides		NA					NA				UNFI	0.010	mg/L	B	U
Total Organic Nitrogen		NA					NA				UNFI	0.240	mg/L	B	-
Total Phosphorous		NA					NA				UNFI	0.980	mg/L	B	-

0888

TABLE F-11A
(Continued)

PHASE II - CHEMICAL PARAMETERS

BORING NUMBER		2945					2945					2954				
SAMPLE NUMBER		112994					113313					113795				
SAMPLING DATE		04/28/93					05/26/93					06/21/93				
CHEMICAL PARAMETERS	FLTD	RESULTS	UNITS	L	VQ		FLTD	RESULTS	UNITS	L	VQ	FLTD	RESULTS	UNITS	L	VQ
Inorganics																
Aluminum		NA						NA				FILT	0.212	mg/L	C	U
Aluminum	UNFI	0.113	mg/L	D	-		UNFI	0.834	mg/L	C	-	UNFI	0.223	mg/L	C	U
Antimony		NA						NA				FILT	0.005	mg/L	C	U
Antimony	UNFI	0.001	mg/L	D	UJ		UNFI	0.005	mg/L	C	U	UNFI	0.005	mg/L	C	U
Arsenic		NA						NA				FILT	0.002	mg/L	C	U
Arsenic	UNFI	0.001	mg/L	D	UJ		UNFI	0.002	mg/L	C	-	UNFI	0.002	mg/L	C	U
Barium		NA						NA				FILT	0.080	mg/L	C	-
Barium	UNFI	0.096	mg/L	D	J		UNFI	0.089	mg/L	C	-	UNFI	0.082	mg/L	C	-
Beryllium		NA						NA				FILT	0.002	mg/L	C	U
Beryllium	UNFI	0.002	mg/L	D	U		UNFI	0.002	mg/L	C	U	UNFI	0.002	mg/L	C	U
Cadmium		NA						NA				FILT	0.005	mg/L	C	U
Cadmium	UNFI	0.002	mg/L	D	U		UNFI	0.005	mg/L	C	U	UNFI	0.005	mg/L	C	U
Calcium		NA						NA				FILT	147.000	mg/L	C	-
Calcium	UNFI	166.000	mg/L	D	-		UNFI	169.000	mg/L	C	-	UNFI	146.000	mg/L	C	-
Chromium		NA						NA				FILT	0.010	mg/L	C	U
Chromium	UNFI	0.004	mg/L	D	U		UNFI	0.010	mg/L	C	U	UNFI	0.010	mg/L	C	U
Cobalt		NA						NA				FILT	0.010	mg/L	C	U
Cobalt	UNFI	0.003	mg/L	D	U		UNFI	0.010	mg/L	C	U	UNFI	0.010	mg/L	C	U
Copper		NA						NA				FILT	0.010	mg/L	C	U
Copper	UNFI	0.005	mg/L	D	U		UNFI	0.010	mg/L	C	UJ	UNFI	0.010	mg/L	C	U
Cyanide	UNFI	0.001	mg/L	D	U			NA				UNFI	0.002	mg/L	C	U
Iron		NA						NA				FILT	0.020	mg/L	C	U
Iron	UNFI	0.029	mg/L	D	U		UNFI	2.520	mg/L	C	-	UNFI	0.033	mg/L	C	-
Lead		NA						NA				FILT	0.002	mg/L	C	U
Lead	UNFI	0.001	mg/L	D	U		UNFI	0.003	mg/L	C	-	UNFI	0.002	mg/L	C	U
Magnesium		NA						NA				FILT	33.100	mg/L	C	-
Magnesium	UNFI	33.800	mg/L	D	-		UNFI	32.100	mg/L	C	-	UNFI	33.700	mg/L	C	-
Manganese		NA						NA				FILT	0.050	mg/L	C	-
Manganese	UNFI	0.023	mg/L	D	-		UNFI	0.054	mg/L	C	-	UNFI	0.055	mg/L	C	-
Mercury		NA						NA				FILT	0.000	mg/L	C	U
Mercury	UNFI	0.000	mg/L	D	U		UNFI	0.000	mg/L	C	U	UNFI	0.000	mg/L	C	U
Molybdenum		NA						NA				FILT	0.010	mg/L	C	U
Molybdenum	UNFI	0.003	mg/L	D	U		UNFI	0.010	mg/L	C	U	UNFI	0.010	mg/L	C	U
Nickel		NA						NA				FILT	0.020	mg/L	C	U
Nickel	UNFI	0.003	mg/L	D	U		UNFI	0.020	mg/L	C	U	UNFI	0.020	mg/L	C	U
Potassium		NA						NA				FILT	4.110	mg/L	C	-
Potassium	UNFI	2.740	mg/L	D	-		UNFI	3.160	mg/L	C	-	UNFI	3.970	mg/L	C	-
Selenium		NA						NA				FILT	0.002	mg/L	C	J
Selenium	UNFI	0.001	mg/L	D	-		UNFI	0.002	mg/L	C	U	UNFI	0.002	mg/L	C	U
Silicon		NA						NA				FILT	5.590	mg/L	C	-
Silicon	UNFI	6.920	mg/L	D	-		UNFI	7.200	mg/L	C	-	UNFI	5.670	mg/L	C	-
Silver		NA						NA				FILT	0.010	mg/L	C	U

TABLE F-11A
(Continued)

PHASE II - CHEMICAL PARAMETERS

BORING NUMBER		2945					2945					2954				
SAMPLE NUMBER		112994					113313					113795				
SAMPLING DATE		04/28/93					05/26/93					06/21/93				
CHEMICAL PARAMETERS	FLTD	RESULTS	UNITS	L	VQ		FLTD	RESULTS	UNITS	L	VQ		FLTD	RESULTS	UNITS	L	VQ
Inorganics																	
Silver	UNFI	0.002	mg/L	D	U		UNFI	0.010	mg/L	C	U		UNFI	0.010	mg/L	C	U
Sodium		NA						NA					FILT	11.300	mg/L	C	-
Sodium	UNFI	4.090	mg/L	D	-		UNFI	5.810	mg/L	C	-		UNFI	11.500	mg/L	C	-
Thallium		NA						NA					FILT	0.010	mg/L	C	U
Thallium	UNFI	0.001	mg/L	D	U		UNFI	0.002	mg/L	C	U		UNFI	0.010	mg/L	C	U
Vanadium		NA						NA					FILT	0.010	mg/L	C	U
Vanadium	UNFI	0.014	mg/L	D	U		UNFI	0.010	mg/L	C	U		UNFI	0.010	mg/L	C	U
Zinc		NA						NA					FILT	0.007	mg/L	C	-
Zinc	UNFI	0.006	mg/L	D	U		UNFI	0.009	mg/L	C	-		UNFI	0.011	mg/L	C	-
Volatile Organics																	
1,1,1-Trichloroethane	UNFI	1.000	ug/L	D	J			NA					UNFI	10.000	ug/L	C	U
1,1,2,2-Tetrachloroethane	UNFI	10.000	ug/L	D	U			NA					UNFI	10.000	ug/L	C	U
1,1,2-Trichloroethane	UNFI	10.000	ug/L	D	U			NA					UNFI	10.000	ug/L	C	U
1,1-Dichloroethane	UNFI	10.000	ug/L	D	U			NA					UNFI	10.000	ug/L	C	U
1,1-Dichloroethene	UNFI	10.000	ug/L	D	U			NA					UNFI	10.000	ug/L	C	U
1,2-Dichloroethane	UNFI	10.000	ug/L	D	U			NA					UNFI	10.000	ug/L	C	U
1,2-Dichloroethene	UNFI	10.000	ug/L	D	U			NA					UNFI	10.000	ug/L	C	U
1,2-Dichloropropane	UNFI	10.000	ug/L	D	U			NA					UNFI	10.000	ug/L	C	U
2-Butanone	UNFI	10.000	ug/L	D	U			NA					UNFI	10.000	ug/L	C	U
2-Hexanone	UNFI	10.000	ug/L	D	UJ			NA					UNFI	10.000	ug/L	C	U
4-Methyl-2-pentanone	UNFI	10.000	ug/L	D	U			NA					UNFI	10.000	ug/L	C	U
Acetone	UNFI	3.000	ug/L	D	J			NA					UNFI	10.000	ug/L	C	U
Benzene	UNFI	10.000	ug/L	D	U			NA					UNFI	10.000	ug/L	C	U
Bromodichloromethane	UNFI	10.000	ug/L	D	U			NA					UNFI	10.000	ug/L	C	U
Bromoform	UNFI	10.000	ug/L	D	U			NA					UNFI	10.000	ug/L	C	U
Bromomethane	UNFI	10.000	ug/L	D	U			NA					UNFI	10.000	ug/L	C	U
Carbon Tetrachloride	UNFI	10.000	ug/L	D	U			NA					UNFI	10.000	ug/L	C	U
Carbon disulfide	UNFI	10.000	ug/L	D	U			NA					UNFI	10.000	ug/L	C	U
Chlorobenzene	UNFI	10.000	ug/L	D	U			NA					UNFI	10.000	ug/L	C	U
Chloroethane	UNFI	10.000	ug/L	D	U			NA					UNFI	10.000	ug/L	C	U
Chloroform	UNFI	10.000	ug/L	D	U			NA					UNFI	10.000	ug/L	C	U
Chloromethane	UNFI	10.000	ug/L	D	UJ			NA					UNFI	10.000	ug/L	C	U
Dibromochloromethane	UNFI	10.000	ug/L	D	U			NA					UNFI	10.000	ug/L	C	U
Ethylbenzene	UNFI	10.000	ug/L	D	U			NA					UNFI	10.000	ug/L	C	U
Methylene chloride	UNFI	10.000	ug/L	D	UJ			NA					UNFI	15.000	ug/L	C	U
Styrene	UNFI	10.000	ug/L	D	U			NA					UNFI	10.000	ug/L	C	U
Tetrachloroethene	UNFI	10.000	ug/L	D	U			NA					UNFI	10.000	ug/L	C	U
Toluene	UNFI	10.000	ug/L	D	U			NA					UNFI	10.000	ug/L	C	U
Trichloroethene	UNFI	10.000	ug/L	D	U			NA					UNFI	10.000	ug/L	C	U
Vinyl Acetate	UNFI	10.000	ug/L	D	U			NA						NA			

TABLE F-11A
(Continued)

PHASE II - CHEMICAL PARAMETERS

BORING NUMBER		2945				2945				2954			
SAMPLE NUMBER		112994				113313				113795			
SAMPLING DATE		04/28/93				05/26/93				06/21/93			
CHEMICAL PARAMETERS	FLTD	RESULTS	UNITS	L	VQ	FLTD	RESULTS	UNITS	L VQ	FLTD	RESULTS	UNITS	L VQ
Volatile Organics													
Vinyl chloride	UNFI	10.000	ug/L	D	UJ		NA			UNFI	10.000	ug/L	C U
Xylenes, Total	UNFI	10.000	ug/L	D	U		NA			UNFI	10.000	ug/L	C U
cis-1,3-Dichloropropene	UNFI	10.000	ug/L	D	U		NA			UNFI	10.000	ug/L	C U
trans-1,3-Dichloropropene	UNFI	10.000	ug/L	D	U		NA			UNFI	10.000	ug/L	C U
Semivolatile Organics													
1,2,4-Trichlorobenzene	UNFI	10.000	ug/L	D	U		NA			UNFI	10.000	ug/L	C U
1,2-Dichlorobenzene	UNFI	10.000	ug/L	D	U		NA			UNFI	10.000	ug/L	C U
1,3-Dichlorobenzene	UNFI	10.000	ug/L	D	U		NA			UNFI	10.000	ug/L	C U
1,4-Dichlorobenzene	UNFI	10.000	ug/L	D	U		NA			UNFI	10.000	ug/L	C U
2,4,5-Trichlorophenol	UNFI	25.000	ug/L	D	U		NA			UNFI	25.000	ug/L	C U
2,4,6-Trichlorophenol	UNFI	10.000	ug/L	D	U		NA			UNFI	10.000	ug/L	C U
2,4-Dichlorophenol	UNFI	10.000	ug/L	D	U		NA			UNFI	10.000	ug/L	C U
2,4-Dimethylphenol	UNFI	10.000	ug/L	D	U		NA			UNFI	10.000	ug/L	C U
2,4-Dinitrophenol	UNFI	50.000	ug/L	D	UJ		NA			UNFI	25.000	ug/L	C UJ
2,4-Dinitrotoluene	UNFI	10.000	ug/L	D	U		NA			UNFI	10.000	ug/L	C U
2,6-Dinitrotoluene	UNFI	10.000	ug/L	D	U		NA			UNFI	10.000	ug/L	C U
2-Benzyl-4-chlorophenol		NA					NA			UNFI	10.000	ug/L	C U
2-Chloronaphthalene	UNFI	10.000	ug/L	D	U		NA			UNFI	10.000	ug/L	C U
2-Chlorophenol	UNFI	10.000	ug/L	D	U		NA			UNFI	10.000	ug/L	C U
2-Methylnaphthalene	UNFI	10.000	ug/L	D	U		NA			UNFI	10.000	ug/L	C U
2-Methylphenol	UNFI	10.000	ug/L	D	U		NA			UNFI	10.000	ug/L	C U
2-Nitroaniline	UNFI	25.000	ug/L	D	U		NA			UNFI	25.000	ug/L	C U
2-Nitrophenol	UNFI	10.000	ug/L	D	U		NA			UNFI	10.000	ug/L	C U
3,3'-Dichlorobenzidine	UNFI	10.000	ug/L	D	U		NA			UNFI	10.000	ug/L	C U
3-Nitroaniline	UNFI	25.000	ug/L	D	U		NA			UNFI	25.000	ug/L	C U
4,6-Dinitro-2-methylphenol	UNFI	25.000	ug/L	D	U		NA			UNFI	25.000	ug/L	C UJ
4-Bromophenyl phenyl ether	UNFI	10.000	ug/L	D	U		NA			UNFI	10.000	ug/L	C U
4-Chloro-3-methylphenol	UNFI	10.000	ug/L	D	U		NA			UNFI	10.000	ug/L	C U
4-Chlorophenylphenyl ether	UNFI	10.000	ug/L	D	U		NA			UNFI	10.000	ug/L	C U
4-Methylphenol	UNFI	10.000	ug/L	D	U		NA			UNFI	10.000	ug/L	C U
4-Nitroaniline	UNFI	25.000	ug/L	D	U		NA			UNFI	25.000	ug/L	C U
4-Nitrophenol	UNFI	25.000	ug/L	D	UJ		NA			UNFI	25.000	ug/L	C U
Acenaphthene	UNFI	10.000	ug/L	D	U		NA			UNFI	10.000	ug/L	C U
Acenaphthylene	UNFI	10.000	ug/L	D	U		NA			UNFI	10.000	ug/L	C U
Anthracene	UNFI	10.000	ug/L	D	U		NA			UNFI	10.000	ug/L	C U
Benzo(a)anthracene	UNFI	10.000	ug/L	D	U		NA			UNFI	10.000	ug/L	C U
Benzo(a)pyrene	UNFI	10.000	ug/L	D	U		NA			UNFI	10.000	ug/L	C U
Benzo(b)fluoranthene	UNFI	10.000	ug/L	D	U		NA			UNFI	10.000	ug/L	C U
Benzo(g,h,i)perylene	UNFI	10.000	ug/L	D	U		NA			UNFI	10.000	ug/L	C U
Benzo(k)fluoranthene	UNFI	10.000	ug/L	D	U		NA			UNFI	10.000	ug/L	C U

TABLE F-11A
(Continued)

PHASE II - CHEMICAL PARAMETERS

BORING NUMBER		2945				2945				2954			
SAMPLE NUMBER		112994				113313				113795			
SAMPLING DATE		04/28/93				05/26/93				06/21/93			
CHEMICAL PARAMETERS	FLTD	RESULTS	UNITS	L	VQ	FLTD	RESULTS	UNITS	L	VQ	FLTD	RESULTS	UNITS	L	VQ
Semivolatile Organics															
Benzoic acid	UNFI	50.000	ug/L	D	UJ		NA				UNFI	50.000	ug/L	C	U
Benzyl alcohol	UNFI	10.000	ug/L	D	U		NA				UNFI	10.000	ug/L	C	U
Butyl benzyl phthalate	UNFI	1.000	ug/L	D	J		NA				UNFI	2.000	ug/L	C	J
Carbazole	UNFI	10.000	ug/L	D	U		NA				UNFI	10.000	ug/L	C	U
Chrysene	UNFI	10.000	ug/L	D	U		NA				UNFI	10.000	ug/L	C	U
Di-n-butyl phthalate	UNFI	10.000	ug/L	D	UJ		NA				UNFI	10.000	ug/L	C	U
Di-n-octyl phthalate	UNFI	10.000	ug/L	D	U		NA				UNFI	10.000	ug/L	C	U
Dibenzo(a,h)anthracene	UNFI	10.000	ug/L	D	U		NA				UNFI	10.000	ug/L	C	U
Dibenzofuran	UNFI	10.000	ug/L	D	U		NA				UNFI	10.000	ug/L	C	U
Diethyl phthalate	UNFI	10.000	ug/L	D	U		NA				UNFI	10.000	ug/L	C	U
Dimethyl phthalate	UNFI	10.000	ug/L	D	U		NA				UNFI	10.000	ug/L	C	U
Fluoranthene	UNFI	10.000	ug/L	D	U		NA				UNFI	10.000	ug/L	C	U
Fluorene	UNFI	10.000	ug/L	D	U		NA				UNFI	10.000	ug/L	C	U
Hexachlorobenzene	UNFI	10.000	ug/L	D	U		NA				UNFI	10.000	ug/L	C	U
Hexachlorobutadiene	UNFI	10.000	ug/L	D	U		NA				UNFI	10.000	ug/L	C	U
Hexachlorocyclopentadiene	UNFI	10.000	ug/L	D	UJ		NA				UNFI	10.000	ug/L	C	UJ
Hexachloroethane	UNFI	10.000	ug/L	D	U		NA				UNFI	10.000	ug/L	C	U
Indeno(1,2,3-cd)pyrene	UNFI	10.000	ug/L	D	U		NA				UNFI	10.000	ug/L	C	U
Isophorone	UNFI	10.000	ug/L	D	U		NA				UNFI	10.000	ug/L	C	U
N-Nitroso-di-n-propylamine	UNFI	10.000	ug/L	D	U		NA				UNFI	10.000	ug/L	C	U
N-Nitrosodimethylamine		NA					NA				UNFI	10.000	ug/L	C	U
N-Nitrosodiphenylamine	UNFI	10.000	ug/L	D	U		NA				UNFI	10.000	ug/L	C	U
Naphthalene	UNFI	10.000	ug/L	D	U		NA				UNFI	10.000	ug/L	C	U
Nitrobenzene	UNFI	10.000	ug/L	D	U		NA				UNFI	10.000	ug/L	C	U
Pentachlorophenol	UNFI	25.000	ug/L	D	U		NA				UNFI	25.000	ug/L	C	UJ
Phenanthrene	UNFI	10.000	ug/L	D	U		NA				UNFI	10.000	ug/L	C	U
Phenol	UNFI	10.000	ug/L	D	U		NA				UNFI	10.000	ug/L	C	U
Pyrene	UNFI	10.000	ug/L	D	U		NA				UNFI	10.000	ug/L	C	U
Tributyl phosphate		NA					NA				UNFI	10.000	ug/L	C	R
bis(2-Chloroethoxy)methane	UNFI	10.000	ug/L	D	U		NA				UNFI	10.000	ug/L	C	U
bis(2-Chloroethyl)ether	UNFI	10.000	ug/L	D	U		NA				UNFI	10.000	ug/L	C	U
bis(2-Chloroisopropyl) ether	UNFI	10.000	ug/L	D	UJ		NA				UNFI	10.000	ug/L	C	UJ
bis(2-Ethylhexyl) phthalate	UNFI	10.000	ug/L	D	U		NA				UNFI	6.000	ug/L	C	J
p-Chloroaniline	UNFI	10.000	ug/L	D	U		NA				UNFI	10.000	ug/L	C	U
Pesticide Organics/PCBs															
4,4'-DDD	UNFI	0.100	ug/L	D	U		NA				UNFI	0.100	ug/L	C	UJ
4,4'-DDE	UNFI	0.100	ug/L	D	U		NA				UNFI	0.100	ug/L	C	UJ
4,4'-DDT	UNFI	0.100	ug/L	D	U		NA				UNFI	0.100	ug/L	C	UJ
Aldrin	UNFI	0.050	ug/L	D	U		NA				UNFI	0.050	ug/L	C	UJ
Aroclor-1016	UNFI	1.000	ug/L	D	U		NA				UNFI	1.000	ug/L	C	U

TABLE F-11A
(Continued)

PHASE II - CHEMICAL PARAMETERS

BORING NUMBER		2945				2945				2954			
SAMPLE NUMBER		112994				113313				113795			
SAMPLING DATE		04/28/93				05/26/93				06/21/93			
CHEMICAL PARAMETERS	FLTD	RESULTS	UNITS	L	VQ	FLTD	RESULTS	UNITS	L VQ	FLTD	RESULTS	UNITS	L VQ
Pesticide Organics/PCBs													
Aroclor-1221	UNFI	2.000	ug/L	D	U		NA			UNFI	2.000	ug/L	C U
Aroclor-1232	UNFI	1.000	ug/L	D	U		NA			UNFI	1.000	ug/L	C U
Aroclor-1242	UNFI	1.000	ug/L	D	U		NA			UNFI	1.000	ug/L	C U
Aroclor-1248	UNFI	1.000	ug/L	D	U		NA			UNFI	1.000	ug/L	C U
Aroclor-1254	UNFI	1.000	ug/L	D	U		NA			UNFI	1.000	ug/L	C U
Aroclor-1260	UNFI	1.000	ug/L	D	U		NA			UNFI	1.000	ug/L	C U
Dieldrin	UNFI	0.100	ug/L	D	U		NA			UNFI	0.100	ug/L	C UJ
Endosulfan II	UNFI	0.100	ug/L	D	U		NA			UNFI	0.100	ug/L	C UJ
Endosulfan sulfate	UNFI	0.100	ug/L	D	U		NA			UNFI	0.100	ug/L	C UJ
Endosulfan-I	UNFI	0.050	ug/L	D	U		NA			UNFI	0.050	ug/L	C UJ
Endrin	UNFI	0.100	ug/L	D	U		NA			UNFI	0.100	ug/L	C UJ
Endrin aldehyde	UNFI	0.100	ug/L	D	U		NA			UNFI	0.100	ug/L	C UJ
Endrin ketone	UNFI	0.100	ug/L	D	U		NA			UNFI	0.100	ug/L	C UJ
Heptachlor	UNFI	0.050	ug/L	D	U		NA			UNFI	0.050	ug/L	C UJ
Heptachlor epoxide	UNFI	0.050	ug/L	D	U		NA			UNFI	0.050	ug/L	C UJ
Methoxychlor	UNFI	0.500	ug/L	D	U		NA			UNFI	0.500	ug/L	C UJ
Toxaphene	UNFI	5.000	ug/L	D	U		NA			UNFI	5.000	ug/L	C U
alpha-BHC	UNFI	0.050	ug/L	D	UJ		NA			UNFI	0.050	ug/L	C UJ
alpha-Chlordane	UNFI	0.050	ug/L	D	U		NA			UNFI	0.050	ug/L	C UJ
beta-BHC	UNFI	0.050	ug/L	D	U		NA			UNFI	0.050	ug/L	C UJ
delta-BHC	UNFI	0.050	ug/L	D	UJ		NA			UNFI	0.050	ug/L	C UJ
gamma-BHC (Lindane)	UNFI	0.050	ug/L	D	UJ		NA			UNFI	0.050	ug/L	C UJ
gamma-Chlordane	UNFI	0.050	ug/L	D	U		NA			UNFI	0.050	ug/L	C UJ
General Chemistry													
Alkalinity	UNFI	455.000	mg/L	B	-		NA			UNFI	420.000	mg/L	B -
Ammonia		NA					NA			UNFI	0.100	mg/L	B U
Chloride	UNFI	4.620	mg/L	B	-		NA			UNFI	20.800	mg/L	B -
Fluoride	UNFI	0.510	mg/L	B	-		NA			UNFI	0.090	mg/L	B -
Nitrate	UNFI	0.360	mg/L	B	J		NA			UNFI	2.040	mg/L	B J
Phenols	UNFI	0.010	mg/L	B	U		NA			UNFI	0.010	mg/L	B U
Phosphorus	UNFI	0.460	mg/L	B	-		NA				NA		
Sulfate	UNFI	69.700	mg/L	B	-		NA			UNFI	95.400	mg/L	B -
Sulfide	UNFI	0.500	mg/L	B	U		NA			UNFI	0.500	mg/L	B U
Total Kjeldahl Nitrogen	UNFI	0.320	mg/L	B	-		NA			UNFI	0.110	mg/L	B -
Total Organic Carbon	UNFI	1.070	mg/L	B	-		NA			UNFI	1.000	mg/L	B U
Total Organic Halides	UNFI	0.010	mg/L	B	U		NA			UNFI	0.010	mg/L	B R
Total Organic Nitrogen	UNFI	0.320	mg/L	B	-		NA			UNFI	0.110	mg/L	B -
Total Phosphorous		NA					NA			UNFI	0.070	mg/L	B -

5174

TABLE F-11B
SOUTH FIELD
TENTATIVELY IDENTIFIED COMPOUNDS
WATER

Sample Number	Sample Location	Media	Parameter	Result	Units
110346	RINSATE	R	1,2-benzenedicarboxylic acid	3	ug/L
110422	TRIP BLANK	TB	1,2-benzenedicarboxylic acid	3	ug/L
113795	2954	GW	silane, methoxytrimethyl-	6	ug/L
113795	2954	GW	silanol, trimethyl-	7	ug/L
113795	2954	GW	ethene, 1,1'-oxybis-	3	ug/L
113795	2954	GW	hexanedioic acid, dioctyl es	8	ug/L
113795	2954	GW	indeno 2', 1':4,5 thieno 3,2-	14	ug/L
113798	1954	GW	heptane, 2,2,4,6,6-pentameth	8	ug/L
113798	1954	GW	1-hexanol, 2-ethyl-	58	ug/L
113798	1954	GW	nonane, 2,3-dimethyl-	230	ug/L
113798	1954	GW	phenol, 2,6-bis(1,1-dimethyl	3	ug/L
113798	1954	GW	hexadecane	3	ug/L
113798	1954	GW	1-decene, 3,4-dimethyl-	6	ug/L
113798	1954	GW	1h-indene, 2,3-dihydro-1,1,3	2	ug/L
113792	11085	GW	heptane, 2,2,4,6,6-pentameth	8	ug/L
113792	11085	GW	1-hexanol, 2-ethyl-	68	ug/L
113792	11085	GW	nonane, 2,3-dimethyl-	230	ug/L
113792	11085	GW	decane, 2,3,6-trimethyl-	2	ug/L
113792	11085	GW	octane, 1,1'-oxybis-	5	ug/L
113792	11085	GW	cyclotrisiloxane, hexamethyl	17	ug/L
113792	11085	GW	cyclotrisiloxane, hexamethyl	3	ug/L
113792	11085	GW	cyclotrisiloxane, hexamethyl	4	ug/L
113792	11085	GW	cyclotrisiloxane, hexamethyl	5	ug/L
113792	11085	GW	cyclotrisiloxane, hexamethyl	5	ug/L
113792	11085	GW	cyclotrisiloxane, hexamethyl	7	ug/L
113792	11085	GW	arsenous acid, tris (trimethy	7	ug/L
113792	11085	GW	arsenous acid, tris (trimethy	7	ug/L
113792	11085	GW	arsenous acid, tris (trimethy	7	ug/L
113792	11085	GW	cyclotrisiloxane, hexamethyl	16	ug/L
113792	11085	GW	cyclotrisiloxane, hexamethyl	17	ug/L
113792	11085	GW	cyclotrisiloxane, hexamethyl	29	ug/L
113792	11085	GW	cyclotrisiloxane, hexamethyl	22	ug/L
113792	11085	GW	cyclotrisiloxane, hexamethyl	19	ug/L

R - rinsate
TB - trip blank
GW - groundwater

TABLE F-12

SOUTH FIELD
RI/FS TCLP RESULTS
OPERABLE UNIT 2 REMEDIAL INVESTIGATION
FERNALD ENVIRONMENTAL MANAGEMENT PROJECT

PHASE I - CHEMICAL PARAMETERS

BORING NUMBER	1516				1712				1713			
SAMPLE NUMBER	055411				061319				061324			
					1.5-2				1.5-2			
SAMPLING DATE	05/19/90				05/04/91				05/04/91			
CHEMICAL PARAMETERS	RESULTS	UNITS	L	VQ	RESULTS	UNITS	L	VQ	RESULTS	UNITS	L	VQ
Inorganics												
Arsenic	0.219	mg/L	C	-	0.325	mg/L	C	-	0.277	mg/L	C	-
Barium	0.207	mg/L	C	-	1.190	mg/L	C	-	0.560	mg/L	C	-
Cadmium	0.020	mg/L	C	-	0.014	mg/L	C	-	0.020	mg/L	C	-
Chromium	0.294	mg/L	C	-	0.077	mg/L	C	-	0.097	mg/L	C	-
Lead	0.101	mg/L	C	-	0.200	mg/L	C	U	0.200	mg/L	C	U
Mercury	0.000	mg/L	C	UJ	0.000	mg/L	C	U	0.000	mg/L	C	U
Selenium	0.167	mg/L	C	-	0.400	mg/L	C	U	0.400	mg/L	C	U
Silver	0.159	mg/L	C	-	0.142	mg/L	C	-	0.138	mg/L	C	-
Volatile Organics												
1,1-Dichloroethene	5.000	ug/kg	C	U	5.000	ug/L	C	U	5.000	ug/L	C	U
1,2-Dichloroethane	5.000	ug/kg	C	U	5.000	ug/L	C	U	5.000	ug/L	C	U
2-Butanone	10.000	ug/kg	C	U	3.000	ug/L	C	JB	1.000	ug/L	C	JB
Benzene	5.000	ug/kg	C	U	5.000	ug/L	C	U	5.000	ug/L	C	U
Carbon Tetrachloride	5.000	ug/kg	C	U	5.000	ug/L	C	U	5.000	ug/L	C	U
Chlorobenzene	5.000	ug/kg	C	U	5.000	ug/L	C	U	5.000	ug/L	C	U
Chloroform	5.000	ug/kg	C	U	5.000	ug/L	C	U	5.000	ug/L	C	U
Pyridine	10.000	ug/L	C	R	20.000	ug/L	C	U	20.000	ug/L	C	U
Tetrachloroethene	5.000	ug/kg	C	U	5.000	ug/L	C	U	5.000	ug/L	C	U
Trichloroethene	5.000	ug/kg	C	U	5.000	ug/L	C	U	5.000	ug/L	C	U
Vinyl chloride	10.000	ug/kg	C	U	10.000	ug/L	C	U	10.000	ug/L	C	U
Semivolatile Organics												
1,4-Dichlorobenzene	10.000	ug/L	C	UJ	20.000	ug/L	C	U	20.000	ug/L	C	U
2,4,5-Trichlorophenol	50.000	ug/L	C	UJ	100.000	ug/L	C	U	100.000	ug/L	C	U
2,4,6-Trichlorophenol	10.000	ug/L	C	UJ	20.000	ug/L	C	U	20.000	ug/L	C	U
2,4-Dinitrotoluene	10.000	ug/L	C	UJ	20.000	ug/L	C	U	20.000	ug/L	C	U
2-Methylphenol	10.000	ug/L	C	UJ	20.000	ug/L	C	U	20.000	ug/L	C	U
3-Methylphenol	10.000	ug/L	C	R	20.000	ug/L	C	U	20.000	ug/L	C	U
4-Methylphenol	10.000	ug/L	C	UJ	20.000	ug/L	C	U	20.000	ug/L	C	U
Hexachlorobenzene	10.000	ug/L	C	UJ	20.000	ug/L	C	U	20.000	ug/L	C	U
Hexachlorobutadiene	10.000	ug/L	C	UJ	20.000	ug/L	C	U	20.000	ug/L	C	U
Hexachloroethane	10.000	ug/L	C	UJ	20.000	ug/L	C	U	20.000	ug/L	C	U
Nitrobenzene	10.000	ug/L	C	UJ	20.000	ug/L	C	U	20.000	ug/L	C	U
Pentachlorophenol	50.000	ug/L	C	UJ	20.000	ug/L	C	J	16.000	ug/L	C	J
Herbicide Organics												
2,4,5-TP (Silvex)	2.000	ug/L	C	UJ	1.800	ug/L	C	U	1.800	ug/L	C	U
2,4-D	12.000	ug/L	C	UJ	12.000	ug/L	C	U	12.000	ug/L	C	U

0895
5174

TABLE F-12
(Continued)

PHASE I - CHEMICAL PARAMETERS

BORING NUMBER	1516				1712				1713			
SAMPLE NUMBER	055411				061319				061324			
					1.5-2				1.5-2			
SAMPLING DATE	05/19/90				05/04/91				05/04/91			
CHEMICAL PARAMETERS	RESULTS	UNITS	L	VQ	RESULTS	UNITS	L	VQ	RESULTS	UNITS	L	VQ
Pesticide Organics/PCBs												
Chlordane	0.500	ug/L	C	UJ	NA				NA			
Endrin	0.100	ug/L	C	UJ	0.100	ug/L	C	U	0.100	ug/L	C	U
Heptachlor	0.050	ug/L	C	UJ	0.050	ug/L	C	U	0.050	ug/L	C	U
Heptachlor epoxide	0.050	ug/L	C	UJ	0.050	ug/L	C	U	0.050	ug/L	C	U
Methoxychlor	0.500	ug/L	C	UJ	0.500	ug/L	C	U	0.500	ug/L	C	U
Toxaphene	1.000	ug/L	C	UJ	1.000	ug/L	C	U	1.000	ug/L	C	U
alpha-Chlordane	NA				0.500	ug/L	C	U	0.500	ug/L	C	U
gamma-BHC (Lindane)	0.050	ug/L	C	UJ	0.050	ug/L	C	U	0.050	ug/L	C	U
gamma-Chlordane	NA				0.500	ug/L	C	U	0.500	ug/L	C	U
General Chemistry												
Combustion (BTU)	110.000	degre	C	U	NA				NA			
pH	8.780	stand	C	-	NA				NA			

TABLE F-12
(Continued)

PHASE I - CHEMICAL PARAMETERS

BORING NUMBER	1714				1715				1792			
SAMPLE NUMBER	061329				061334				067362			
	1.5-2				1.5-2				28-29.5			
SAMPLING DATE	05/04/91				05/04/91				08/22/91			
CHEMICAL PARAMETERS	RESULTS	UNITS	L	VQ	RESULTS	UNITS	L	VQ	RESULTS	UNITS	L	VQ
Inorganics												
Arsenic	0.250	mg/L	C	U	0.120	mg/L	C	-	0.250	mg/L	C	U
Barium	1.040	mg/L	C	-	0.512	mg/L	C	-	0.867	mg/L	C	-
Cadmium	0.013	mg/L	C	-	0.002	mg/L	C	-	0.010	mg/L	C	U
Chromium	0.089	mg/L	C	-	0.021	mg/L	C	-	0.121	mg/L	C	-
Lead	0.200	mg/L	C	U	0.040	mg/L	C	U	0.151	mg/L	C	-
Mercury	0.000	mg/L	C	U	0.000	mg/L	C	U	0.000	mg/L	C	U
Selenium	0.400	mg/L	C	U	0.109	mg/L	C	-	0.161	mg/L	C	-
Silver	0.128	mg/L	C	-	0.024	mg/L	C	-	0.095	mg/L	C	-
Volatile Organics												
1,1-Dichloroethene	5.000	ug/L	C	U	5.000	ug/L	C	U	5.000	ug/L	C	U
1,2-Dichloroethane	5.000	ug/L	C	U	5.000	ug/L	C	U	5.000	ug/L	C	U
2-Butanone	3.000	ug/L	C	JB	2.000	ug/L	C	J	3.000	ug/L	C	J
Benzene	5.000	ug/L	C	U	5.000	ug/L	C	U	5.000	ug/L	C	U
Carbon Tetrachloride	5.000	ug/L	C	U	5.000	ug/L	C	U	5.000	ug/L	C	UJ
Chlorobenzene	5.000	ug/L	C	U	5.000	ug/L	C	U	5.000	ug/L	C	U
Chloroform	5.000	ug/L	C	U	1.000	ug/L	C	JB	5.000	ug/L	C	U
Pyridine	20.000	ug/L	C	U	20.000	ug/L	C	U	20.000	ug/L	C	U
Tetrachloroethene	5.000	ug/L	C	U	5.000	ug/L	C	U	1.000	ug/L	C	J
Trichloroethene	5.000	ug/L	C	U	5.000	ug/L	C	U	5.000	ug/L	C	U
Vinyl chloride	10.000	ug/L	C	U	10.000	ug/L	C	U	10.000	ug/L	C	U
Semivolatile Organics												
1,4-Dichlorobenzene	20.000	ug/L	C	U	20.000	ug/L	C	U	20.000	ug/L	C	U
2,4,5-Trichlorophenol	100.000	ug/L	C	U	100.000	ug/L	C	U	100.000	ug/L	C	U
2,4,6-Trichlorophenol	20.000	ug/L	C	U	20.000	ug/L	C	U	20.000	ug/L	C	U
2,4-Dinitrotoluene	20.000	ug/L	C	U	20.000	ug/L	C	U	20.000	ug/L	C	U
2-Methylphenol	20.000	ug/L	C	U	20.000	ug/L	C	U	20.000	ug/L	C	U
3-Methylphenol	20.000	ug/L	C	U	20.000	ug/L	C	U	20.000	ug/L	C	U
4-Methylphenol	20.000	ug/L	C	U	20.000	ug/L	C	U	20.000	ug/L	C	U
Hexachlorobenzene	20.000	ug/L	C	U	20.000	ug/L	C	U	20.000	ug/L	C	U
Hexachlorobutadiene	20.000	ug/L	C	U	20.000	ug/L	C	U	20.000	ug/L	C	U
Hexachloroethane	20.000	ug/L	C	U	20.000	ug/L	C	U	20.000	ug/L	C	U
Nitrobenzene	20.000	ug/L	C	U	20.000	ug/L	C	U	20.000	ug/L	C	U
Pentachlorophenol	13.000	ug/L	C	J	100.000	ug/L	C	U	100.000	ug/L	C	U
Herbicide Organics												
2,4,5-TP (Silvex)	1.800	ug/L	C	U	1.800	ug/L	C	U	1.800	ug/L	C	U
2,4-D	12.000	ug/L	C	U	12.000	ug/L	C	U	10.000	ug/L	C	U

0897
5174

TABLE F-12
(Continued)

PHASE I - CHEMICAL PARAMETERS

BORING NUMBER	1714				1715				1792			
SAMPLE NUMBER	061329				061334				067362			
	1.5-2				1.5-2				28-29.5			
SAMPLING DATE	05/04/91				05/04/91				08/22/91			
CHEMICAL PARAMETERS	RESULTS	UNITS	L	VQ	RESULTS	UNITS	L	VQ	RESULTS	UNITS	L	VQ
Pesticide Organics/PCBs												
Endrin	0.100	ug/L	C	U	0.100	ug/L	C	U	0.100	ug/L	C	U
Heptachlor	0.050	ug/L	C	U	0.050	ug/L	C	U	0.050	ug/L	C	U
Heptachlor epoxide	0.050	ug/L	C	U	0.050	ug/L	C	U	0.050	ug/L	C	UJ
Methoxychlor	0.500	ug/L	C	U	0.500	ug/L	C	U	0.500	ug/L	C	U
Toxaphene	1.000	ug/L	C	U	1.000	ug/L	C	U	1.000	ug/L	C	U
alpha-Chlordane	0.500	ug/L	C	U	0.500	ug/L	C	U	0.500	ug/L	C	UJ
gamma-BHC (Lindane)	0.050	ug/L	C	U	0.050	ug/L	C	U	0.050	ug/L	C	UJ
gamma-Chlordane	0.500	ug/L	C	U	0.500	ug/L	C	U	0.500	ug/L	C	UJ

TABLE F-12
(Continued)

PHASE I - CHEMICAL PARAMETERS

BORING NUMBER	1793				1794				1795			
SAMPLE NUMBER	067335				067326				067367			
	6-7.5				1.5-2				0-1			
SAMPLING DATE	08/20/91				08/13/91				08/23/91			
CHEMICAL PARAMETERS	RESULTS	UNITS	L	VQ	RESULTS	UNITS	L	VQ	RESULTS	UNITS	L	VQ
Inorganics												
Aluminum	NA				NA				10900.000	mg/kg	D	-
Antimony	NA				NA				10.200	mg/kg	D	J
Arsenic	0.250	mg/L	C	U	0.100	mg/L	C	U	4.000	mg/kg	D	-
Barium	0.690	mg/L	C	-	0.616	mg/L	C	-	78.400	mg/kg	D	-
Beryllium	NA				NA				0.770	mg/kg	D	-
Boron	NA				NA				23.100	mg/kg	D	U
Cadmium	0.015	mg/L	C	-	0.007	mg/L	C	-	0.007	mg/L	D	-
Calcium	NA				NA				31500.000	mg/kg	D	-
Chromium	0.122	mg/L	C	-	0.075	mg/L	C	-	0.092	mg/L	D	-
Cobalt	NA				NA				13.200	mg/kg	D	-
Copper	NA				NA				18.000	mg/kg	D	-
Cyanide	NA				NA				0.110	mg/kg	D	UJ
Iron	NA				NA				20000.000	mg/kg	D	-
Lead	0.157	mg/L	C	-	0.081	mg/L	C	-	10.500	mg/kg	D	-
Magnesium	NA				NA				9930.000	mg/kg	D	-
Manganese	NA				NA				358.000	mg/kg	D	-
Mercury	0.000	mg/L	C	U	0.000	mg/L	C	U	0.000	mg/L	D	U
Molybdenum	NA				NA				14.500	mg/kg	D	-
Nickel	NA				NA				21.800	mg/kg	D	-
Potassium	NA				NA				925.000	mg/kg	D	-
Selenium	0.169	mg/L	C	-	0.138	mg/L	C	-	0.129	mg/L	D	-
Silicon	NA				NA				1530.000	mg/kg	D	J
Silver	0.093	mg/L	C	-	0.066	mg/L	C	-	0.080	mg/L	D	-
Sodium	NA				NA				101.000	mg/kg	D	U
Thallium	NA				NA				0.450	mg/kg	D	U
Vanadium	NA				NA				26.300	mg/kg	D	-
Zinc	NA				NA				48.400	mg/kg	D	-
Volatile Organics												
1,1,1-Trichloroethane	NA				NA				6.000	ug/kg	D	U
1,1,2,2-Tetrachloroethane	NA				NA				6.000	ug/kg	D	U
1,1,2-Trichloroethane	NA				NA				6.000	ug/kg	D	U
1,1-Dichloroethane	NA				NA				6.000	ug/kg	D	U
1,1-Dichloroethene	5.000	ug/L	C	U	5.000	ug/L	C	U	6.000	ug/kg	D	U
1,2-Dichloroethane	5.000	ug/L	C	U	5.000	ug/L	C	U	6.000	ug/kg	D	U
1,2-Dichloroethene	NA				NA				6.000	ug/kg	D	U
1,2-Dichloropropane	NA				NA				6.000	ug/kg	D	U
2-Butanone	2.000	ug/L	C	J	2.000	ug/L	C	U	11.000	ug/kg	D	UJ
2-Hexanone	NA				NA				11.000	ug/kg	D	UJ
4-Methyl-2-pentanone	NA				NA				11.000	ug/kg	D	UJ
Acetone	NA				NA				5.000	ug/kg	D	J

0899

5174

TABLE F-12
(Continued)

PHASE I - CHEMICAL PARAMETERS

BORING NUMBER	1793				1794				1795			
SAMPLE NUMBER	067335				067326				067367			
	6-7.5				1.5-2				0-1			
SAMPLING DATE	08/20/91				08/13/91				08/23/91			
CHEMICAL PARAMETERS	RESULTS	UNITS	L	VQ	RESULTS	UNITS	L	VQ	RESULTS	UNITS	L	VQ
Volatile Organics												
Benzene	5.000	ug/L	C	U	5.000	ug/L	C	U	6.000	ug/kg	D	U
Bromodichloromethane	NA				NA				6.000	ug/kg	D	U
Bromoform	NA				NA				6.000	ug/kg	D	U
Bromomethane	NA				NA				11.000	ug/kg	D	U
Carbon Tetrachloride	5.000	ug/L	C	UJ	5.000	ug/L	C	U	6.000	ug/kg	D	UJ
Carbon disulfide	NA				NA				6.000	ug/kg	D	U
Chlorobenzene	5.000	ug/L	C	U	5.000	ug/L	C	U	6.000	ug/kg	D	U
Chloroethane	NA				NA				11.000	ug/kg	D	U
Chloroform	5.000	ug/L	C	U	5.000	ug/L	C	U	6.000	ug/kg	D	U
Chloromethane	NA				NA				11.000	ug/kg	D	U
Dibromochloromethane	NA				NA				6.000	ug/kg	D	U
Ethylbenzene	NA				NA				6.000	ug/kg	D	U
Methylene chloride	NA				NA				9.000	ug/kg	D	UJ
Pyridine	20.000	ug/L	C	U	20.000	ug/L	C	U	20.000	ug/L	D	U
Styrene	NA				NA				6.000	ug/kg	D	U
Tetrachloroethene	5.000	ug/L	C	U	5.000	ug/L	C	U	6.000	ug/kg	D	U
Toluene	NA				NA				6.000	ug/kg	D	U
Trichloroethene	5.000	ug/L	C	U	5.000	ug/L	C	U	6.000	ug/kg	D	U
Vinyl Acetate	NA				NA				11.000	ug/kg	D	U
Vinyl chloride	10.000	ug/L	C	U	10.000	ug/L	C	U	11.000	ug/kg	D	UJ
Xylenes, Total	NA				NA				6.000	ug/kg	D	U
cis-1,3-Dichloropropene	NA				NA				6.000	ug/kg	D	U
trans-1,3-Dichloropropene	NA				NA				6.000	ug/kg	D	U
Semivolatile Organics												
1,2,4-Trichlorobenzene	NA				NA				390.000	ug/kg	D	U
1,2-Dichlorobenzene	NA				NA				390.000	ug/kg	D	U
1,3-Dichlorobenzene	NA				NA				390.000	ug/kg	D	U
1,4-Dichlorobenzene	20.000	ug/L	C	U	20.000	ug/L	C	U	20.000	ug/L	D	U
2,4,5-Trichlorophenol	100.000	ug/L	C	U	100.000	ug/L	C	U	100.000	ug/L	D	U
2,4,6-Trichlorophenol	20.000	ug/L	C	U	20.000	ug/L	C	U	390.000	ug/kg	D	U
2,4-Dichlorophenol	NA				NA				390.000	ug/kg	D	U
2,4-Dimethylphenol	NA				NA				390.000	ug/kg	D	U
2,4-Dinitrophenol	NA				NA				1900.000	ug/kg	D	UJ
2,4-Dinitrotoluene	20.000	ug/L	C	U	20.000	ug/L	C	U	390.000	ug/kg	D	U
2,6-Dinitrotoluene	NA				NA				390.000	ug/kg	D	U
2-Chloronaphthalene	NA				NA				390.000	ug/kg	D	U
2-Chlorophenol	NA				NA				390.000	ug/kg	D	U
2-Methylnaphthalene	NA				NA				390.000	ug/kg	D	U
2-Methylphenol	20.000	ug/L	C	U	20.000	ug/L	C	U	390.000	ug/kg	D	U
2-Nitroaniline	NA				NA				1900.000	ug/kg	D	U

TABLE F-12
(Continued)

PHASE I - CHEMICAL PARAMETERS

BORING NUMBER	1793				1794				1795			
SAMPLE NUMBER	067335				067326				067367			
	6-7.5				1.5-2				0-1			
SAMPLING DATE	08/20/91				08/13/91				08/23/91			
CHEMICAL PARAMETERS	RESULTS	UNITS	L	VQ	RESULTS	UNITS	L	VQ	RESULTS	UNITS	L	VQ
Semivolatile Organics												
2-Nitrophenol	NA				NA				390.000	ug/kg	D	U
3,3'-Dichlorobenzidine	NA				NA				770.000	ug/kg	D	UJ
3-Methylphenol	20.000	ug/L	C	U	20.000	ug/L	C	U	20.000	ug/L	D	U
3-Nitroaniline	NA				NA				1900.000	ug/kg	D	U
4,6-Dinitro-2-methylphenol	NA				NA				1900.000	ug/kg	D	U
4-Bromophenyl phenyl ether	NA				NA				390.000	ug/kg	D	U
4-Chloro-3-methylphenol	NA				NA				390.000	ug/kg	D	U
4-Chlorophenylphenyl ether	NA				NA				390.000	ug/kg	D	U
4-Methylphenol	20.000	ug/L	C	U	20.000	ug/L	C	U	390.000	ug/kg	D	U
4-Nitroaniline	NA				NA				1900.000	ug/kg	D	U
4-Nitrophenol	NA				NA				1900.000	ug/kg	D	U
Acenaphthene	NA				NA				390.000	ug/kg	D	U
Acenaphthylene	NA				NA				390.000	ug/kg	D	U
Anthracene	NA				NA				58.000	ug/kg	D	J
Benzo(a)anthracene	NA				NA				270.000	ug/kg	D	J
Benzo(a)pyrene	NA				NA				120.000	ug/kg	D	J
Benzo(b)fluoranthene	NA				NA				360.000	ug/kg	D	J
Benzo(g,h,i)perylene	NA				NA				100.000	ug/kg	D	J
Benzo(k)fluoranthene	NA				NA				390.000	ug/kg	D	U
Benzoic acid	NA				NA				1900.000	ug/kg	D	UJ
Benzyl alcohol	NA				NA				390.000	ug/kg	D	U
Butyl benzyl phthalate	NA				NA				390.000	ug/kg	D	U
Chrysene	NA				NA				300.000	ug/kg	D	J
Di-n-butyl phthalate	NA				NA				390.000	ug/kg	D	U
Di-n-octyl phthalate	NA				NA				390.000	ug/kg	D	U
Dibenzo(a,h)anthracene	NA				NA				390.000	ug/kg	D	U
Dibenzofuran	NA				NA				390.000	ug/kg	D	U
Diethyl phthalate	NA				NA				390.000	ug/kg	D	U
Dimethyl phthalate	NA				NA				390.000	ug/kg	D	U
Fluoranthene	NA				NA				610.000	ug/kg	D	-
Fluorene	NA				NA				390.000	ug/kg	D	U
Hexachlorobenzene	20.000	ug/L	C	U	20.000	ug/L	C	U	390.000	ug/kg	D	U
Hexachlorobutadiene	20.000	ug/L	C	U	20.000	ug/L	C	U	390.000	ug/kg	D	U
Hexachlorocyclopentadiene	NA				NA				390.000	ug/kg	D	U
Hexachloroethane	20.000	ug/L	C	U	20.000	ug/L	C	U	390.000	ug/kg	D	U
Indeno(1,2,3-cd)pyrene	NA				NA				84.000	ug/kg	D	J
Isophorone	NA				NA				390.000	ug/kg	D	U
Methyl parathion	NA				NA				100.000	ug/kg	C	UJ
N-Nitroso-di-n-propylamine	NA				NA				390.000	ug/kg	D	U
N-Nitrosodiphenylamine	NA				NA				390.000	ug/kg	D	U
Naphthalene	NA				NA				390.000	ug/kg	D	U
Nitrobenzene	20.000	ug/L	C	U	20.000	ug/L	C	U	390.000	ug/kg	D	U

TABLE F-12
(Continued)

PHASE I - CHEMICAL PARAMETERS

BORING NUMBER	1793				1794				1795			
SAMPLE NUMBER	067335				067326				067367			
	6-7.5				1.5-2				0-1			
SAMPLING DATE	08/20/91				08/13/91				08/23/91			
CHEMICAL PARAMETERS	RESULTS	UNITS	L	VQ	RESULTS	UNITS	L	VQ	RESULTS	UNITS	L	VQ
Semivolatile Organics												
O,O,O-Triethylphosphorothioate	NA				NA				100.000	ug/kg	D	UJ
Parathion	NA				NA				100.000	ug/kg	C	UJ
Pentachlorophenol	100.000	ug/L	C	U	100.000	ug/L	C	U	100.000	ug/L	D	U
Phenanthrene	NA				NA				370.000	ug/kg	D	J
Phenol	NA				NA				390.000	ug/kg	D	U
Pyrene	NA				NA				500.000	ug/kg	D	-
Sulfotep	NA				NA				100.000	ug/kg	C	UJ
bis(2-Chloroethoxy)methane	NA				NA				390.000	ug/kg	D	U
bis(2-Chloroethyl)ether	NA				NA				390.000	ug/kg	D	U
bis(2-Chloroisopropyl) ether	NA				NA				390.000	ug/kg	D	U
bis(2-Ethylhexyl) phthalate	NA				NA				390.000	ug/kg	D	U
p-Chloroaniline	NA				NA				390.000	ug/kg	D	U
Herbicide Organics												
2,4,5-TP (Silvex)	1.800	ug/L	C	U	1.800	ug/L	C	U	1.800	ug/L	D	U
2,4-D	10.000	ug/L	C	U	10.000	ug/L	C	U	10.000	ug/L	D	U
Pesticide Organics/PCBs												
4,4'-DDD	NA				NA				19.000	ug/kg	D	U
4,4'-DDE	NA				NA				19.000	ug/kg	D	U
4,4'-DDT	NA				NA				19.000	ug/kg	D	U
Aldrin	NA				NA				9.500	ug/kg	D	U
Aroclor-1016	NA				NA				95.000	ug/kg	D	U
Aroclor-1221	NA				NA				95.000	ug/kg	D	U
Aroclor-1232	NA				NA				95.000	ug/kg	D	U
Aroclor-1242	NA				NA				95.000	ug/kg	D	U
Aroclor-1248	NA				NA				95.000	ug/kg	D	U
Aroclor-1254	NA				NA				190.000	ug/kg	D	U
Aroclor-1260	NA				NA				190.000	ug/kg	D	U
Chlordane	0.500	ug/L	C	U	NA				0.500	ug/L	D	U
Dieldrin	NA				NA				19.000	ug/kg	D	U
Dimethoate	NA				NA				100.000	ug/kg	C	UJ
Disulfoton	NA				NA				100.000	ug/kg	C	UJ
Endosulfan II	NA				NA				19.000	ug/kg	D	U
Endosulfan sulfate	NA				NA				19.000	ug/kg	D	U
Endosulfan-I	NA				NA				9.500	ug/kg	D	U
Endrin	0.100	ug/L	C	U	0.100	ug/L	C	U	0.100	ug/L	D	U
Endrin ketone	NA				NA				19.000	ug/kg	D	U
Ethion	NA				NA				100.000	ug/kg	C	UJ
Famphur	NA				NA				100.000	ug/kg	C	UJ

TABLE F-12
(Continued)

PHASE I - CHEMICAL PARAMETERS

BORING NUMBER	1793				1794				1795			
SAMPLE NUMBER	067335				067326				067367			
	6-7.5				1.5-2				0-1			
SAMPLING DATE	08/20/91				08/13/91				08/23/91			
CHEMICAL PARAMETERS	RESULTS	UNITS	L	VQ	RESULTS	UNITS	L	VQ	RESULTS	UNITS	L	VQ
Pesticide Organics/PCBs												
Heptachlor	0.050	ug/L	C	U	0.050	ug/L	C	U	9.500	ug/kg	D	U
Heptachlor epoxide	0.050	ug/L	C	UJ	0.050	ug/L	C	U	9.500	ug/kg	D	U
Methoxychlor	0.500	ug/L	C	U	0.500	ug/L	C	U	0.500	ug/L	D	U
Phorate	NA				NA				100.000	ug/kg	C	UJ
Thionazin	NA				NA				100.000	ug/kg	C	UJ
Toxaphene	1.000	ug/L	C	U	1.000	ug/L	C	U	190.000	ug/kg	D	U
alpha-BHC	NA				NA				9.500	ug/kg	D	U
alpha-Chlordane	0.500	ug/L	C	UJ	0.500	ug/L	C	U	0.500	ug/L	D	U
beta-BHC	NA				NA				9.500	ug/kg	D	U
delta-BHC	NA				NA				9.500	ug/kg	D	U
gamma-BHC (Lindane)	0.050	ug/L	C	UJ	0.050	ug/L	C	U	9.500	ug/kg	D	U
gamma-Chlordane	0.500	ug/L	C	UJ	0.500	ug/L	C	U	95.000	ug/kg	D	U
Dioxin Furan												
1,2,3,4,6,7,8-Heptachlorodibenzo-p-dioxin	NA				NA				0.190	ug/kg	E	U
1,2,3,4,6,7,8-Heptachlorodibenzofuran	NA				NA				0.050	ug/kg	E	U
1,2,3,4,7,8,9-Heptachlorodibenzofuran	NA				NA				0.070	ug/kg	E	U
1,2,3,4,7,8-Hexachlorodibenzo-p-dioxin	NA				NA				0.110	ug/kg	E	U
1,2,3,4,7,8-Hexachlorodibenzofuran	NA				NA				0.048	ug/kg	E	U
1,2,3,6,7,8-Hexachlorodibenzo-p-dioxin	NA				NA				0.090	ug/kg	E	U
1,2,3,6,7,8-Hexachlorodibenzofuran	NA				NA				0.043	ug/kg	E	U
1,2,3,7,8,9-Hexachlorodibenzo-p-dioxin	NA				NA				0.095	ug/kg	E	U
1,2,3,7,8,9-Hexachlorodibenzofuran	NA				NA				0.055	ug/kg	E	U
1,2,3,7,8-Pentachlorodibenzo-p-dioxin	NA				NA				0.120	ug/kg	E	UJ
1,2,3,7,8-Pentachlorodibenzofuran	NA				NA				0.032	ug/kg	E	UJ
2,3,4,6,7,8-Hexachlorodibenzofuran	NA				NA				0.050	ug/kg	E	U
2,3,4,7,8-Pentachlorodibenzofuran	NA				NA				0.035	ug/kg	E	UJ
2,3,7,8-TCDD	NA				NA				0.210	ug/kg	E	U
2,3,7,8-TCDF	NA				NA				0.280	ug/kg	E	U
Heptachlorodibenzo-p-dioxin	NA				NA				0.190	ug/kg	E	U
Heptachlorodibenzofuran	NA				NA				0.060	ug/kg	E	U
Hexachlorodibenzo-p-dioxin	NA				NA				0.100	ug/kg	E	U
Hexachlorodibenzofuran	NA				NA				0.049	ug/kg	E	U
Octachlorodibenzo-p-dioxin	NA				NA				2.900	ug/kg	E	J
Octachlorodibenzofuran	NA				NA				0.075	ug/kg	E	UJ
Pentachlorodibenzo-p-dioxin	NA				NA				0.120	ug/kg	E	UJ
Pentachlorodibenzofuran	NA				NA				0.034	ug/kg	E	UJ
Tetrachlorodibenzo-p-dioxin	NA				NA				0.022	ug/kg	E	U
Tetrachlorodibenzofuran	NA				NA				0.027	ug/kg	E	UJ

TABLE F-12
(Continued)

PHASE I - CHEMICAL PARAMETERS

BORING NUMBER	1795				1882				1883			
SAMPLE NUMBER	067369				067802				067801			
	2-3				1.5-2				1.5-2			
SAMPLING DATE	08/23/91				02/22/92				02/22/92			
CHEMICAL PARAMETERS	RESULTS	UNITS	L	VQ	RESULTS	UNITS	L	VQ	RESULTS	UNITS	L	VQ
Volatile Organics												
1,1-Dichloroethene	5.000	ug/L	C	U	5.000	ug/L	C	U	5.000	ug/L	C	U
1,2-Dichloroethane	5.000	ug/L	C	U	5.000	ug/L	C	U	5.000	ug/L	C	U
2-Butanone	10.000	ug/L	C	R	4.000	ug/L	C	J	10.000	ug/L	C	U
Benzene	5.000	ug/L	C	U	5.000	ug/L	C	U	5.000	ug/L	C	U
Carbon Tetrachloride	5.000	ug/L	C	U	5.000	ug/L	C	U	5.000	ug/L	C	U
Chlorobenzene	5.000	ug/L	C	U	5.000	ug/L	C	U	5.000	ug/L	C	U
Chloroform	5.000	ug/L	C	U	5.000	ug/L	C	U	5.000	ug/L	C	U
Pyridine	NA				20.000	ug/L	C	U	20.000	ug/L	C	U
Tetrachloroethene	5.000	ug/L	C	U	5.000	ug/L	C	U	5.000	ug/L	C	U
Trichloroethene	5.000	ug/L	C	U	5.000	ug/L	C	U	5.000	ug/L	C	U
Vinyl chloride	10.000	ug/L	C	UJ	10.000	ug/L	C	U	10.000	ug/L	C	U
Semivolatile Organics												
1,4-Dichlorobenzene	NA				20.000	ug/L	C	U	20.000	ug/L	C	U
2,4,5-Trichlorophenol	NA				100.000	ug/L	C	U	100.000	ug/L	C	U
2,4,6-Trichlorophenol	NA				20.000	ug/L	C	U	20.000	ug/L	C	U
2,4-Dinitrotoluene	NA				20.000	ug/L	C	U	20.000	ug/L	C	U
2-Methylphenol	NA				20.000	ug/L	C	U	20.000	ug/L	C	U
3-Methylphenol	NA				20.000	ug/L	C	R	20.000	ug/L	C	R
4-Methylphenol	NA				20.000	ug/L	C	U	20.000	ug/L	C	U
Hexachlorobenzene	NA				20.000	ug/L	C	U	20.000	ug/L	C	U
Hexachlorobutadiene	NA				20.000	ug/L	C	U	20.000	ug/L	C	U
Hexachloroethane	NA				20.000	ug/L	C	U	20.000	ug/L	C	U
Nitrobenzene	NA				20.000	ug/L	C	U	20.000	ug/L	C	U
Pentachlorophenol	NA				100.000	ug/L	C	U	100.000	ug/L	C	U

TABLE F-12
(Continued)

PHASE I - CHEMICAL PARAMETERS

BORING NUMBER	1884				1885			
SAMPLE NUMBER	067804				067803			
	1.5-2				1.5-2			
SAMPLING DATE	02/22/92				02/22/92			
CHEMICAL PARAMETERS	RESULTS	UNITS	L	VQ	RESULTS	UNITS	L	VQ
Volatile Organics								
1,1-Dichloroethene	5.000	ug/L	C	U	5.000	ug/L	C	U
1,2-Dichloroethane	5.000	ug/L	C	U	5.000	ug/L	C	U
2-Butanone	2.000	ug/L	C	J	10.000	ug/L	C	U
Benzene	5.000	ug/L	C	U	5.000	ug/L	C	U
Carbon Tetrachloride	5.000	ug/L	C	U	5.000	ug/L	C	U
Chlorobenzene	5.000	ug/L	C	U	5.000	ug/L	C	U
Chloroform	5.000	ug/L	C	U	5.000	ug/L	C	U
Pyridine	20.000	ug/L	C	U	20.000	ug/L	C	U
Tetrachloroethene	5.000	ug/L	C	U	5.000	ug/L	C	U
Trichloroethene	5.000	ug/L	C	U	5.000	ug/L	C	U
Vinyl chloride	10.000	ug/L	C	U	10.000	ug/L	C	U
Semivolatile Organics								
1,4-Dichlorobenzene	20.000	ug/L	C	U	20.000	ug/L	C	U
2,4,5-Trichlorophenol	100.000	ug/L	C	U	100.000	ug/L	C	U
2,4,6-Trichlorophenol	20.000	ug/L	C	U	20.000	ug/L	C	U
2,4-Dinitrotoluene	20.000	ug/L	C	U	20.000	ug/L	C	U
2-Methylphenol	20.000	ug/L	C	U	20.000	ug/L	C	U
3-Methylphenol	20.000	ug/L	C	R	20.000	ug/L	C	R
4-Methylphenol	20.000	ug/L	C	U	20.000	ug/L	C	U
Hexachlorobenzene	20.000	ug/L	C	U	20.000	ug/L	C	U
Hexachlorobutadiene	20.000	ug/L	C	U	20.000	ug/L	C	U
Hexachloroethane	20.000	ug/L	C	U	20.000	ug/L	C	U
Nitrobenzene	20.000	ug/L	C	U	20.000	ug/L	C	U
Pentachlorophenol	100.000	ug/L	C	U	100.000	ug/L	C	U

0995

5174

TABLE F-13

SOUTH FIELD
RI/FS QUALITY CONTROL SAMPLES
OPERABLE UNIT 2 REMEDIAL INVESTIGATION
FERNALD ENVIRONMENTAL MANAGEMENT PROJECT

PHASE I - RADIOLOGICAL PARAMETERS

QC TYPE	RINSATE
SAMPLE NUMBER	008034
ASSOCIATED SAMPLES	008014, 008024, 008028
SAMPLING DATE	02/09/88

RADIOLOGICAL PARAMETERS	RESULTS	UNITS	VQ
NP-237	1.000	pci/L	U
PU-238	1.000	pci/L	U
PU-239/240	1.000	pci/L	U
RA-226	1.000	pci/L	U
RA-228	3.000	pci/L	U
SR-90	5.000	pci/L	U
TC-99	30.000	pci/L	U
TH-228	1.000	pci/L	U
TH-230	1.000	pci/L	U
TH-232	1.000	pci/L	U
U-234	1.200	pci/L	U
U-235/236	1.000	pci/L	U
U-238	1.000	pci/L	U
U-TOTAL	2.000	ug/L	U

0906

FEMP-OU2-4 DRAFT
February 18, 1994
5174

TABLE F-13
(Continued)

PHASE I - CHEMICAL PARAMETERS

QC TYPE	RINSATE
SAMPLE NUMBER	008034
ASSOCIATED SAMPLES	008014, 008024, 008028
SAMPLING DATE	02/09/88

CHEMICAL PARAMETERS	RESULTS	UNITS	L	VQ
Inorganics				
Arsenic	0.200	mg/L	3	UJ
Barium	0.010	mg/L	3	J
Cadmium	0.005	mg/L	3	UJ
Calcium	1.710	mg/L	3	J
Chromium	0.020	mg/L	3	UJ
Copper	0.010	mg/L	3	UJ
Iron	0.100	mg/L	3	J
Lead	0.050	mg/L	3	UJ
Magnesium	0.190	mg/L	3	J
Manganese	0.020	mg/L	3	UJ
Mercury	0.000	mg/L	3	U
Molybdenum	0.020	mg/L	3	UJ
Nickel	0.020	mg/L	3	UJ
Selenium	0.200	mg/L	3	UJ
Silver	0.010	mg/L	3	UJ
Sodium	0.750	mg/L	3	UJ
Semivolatile Organics				
Phenol	0.010	mg/L	3	J
General Chemistry				
Chloride	1.000	mg/L	3	U
Fluoride	0.100	mg/L	3	U
Hexavalent Chromium	0.010	mg/L	3	R
Nitrate	0.425	mg/L	3	R
Sulfate	4.200	mg/L	3	-

TABLE F-13
(Continued)

PHASE II - RADIOLOGICAL PARAMETERS

QC TYPE	FIELD BLANK			RINSATE			RINSATE		
SAMPLE NUMBER	113317			110346			113321		
ASSOCIATED SAMPLES	113320			110392, 110396, 110385, 110389			113319		
SAMPLING DATE	05/28/93			03/22/93			06/03/93		
RADIOLOGICAL PARAMETERS	RESULTS	UNITS	VQ	RESULTS	UNITS	VQ	RESULTS	UNITS	VQ
CS-137	16.000	pci/L	UJ	14.000	pci/L	UJ	16.700	pci/L	UJ
GROSS ALPHA	0.400	pci/L	UJ	0.510	pci/L	UJ	0.498	pci/L	UJ
GROSS BETA	1.000	pci/L	UJ	1.010	pci/L	UJ	0.995	pci/L	UJ
NP-237	1.460	pci/L	N	0.075	pci/L	R	0.616	pci/L	N
PU-238	1.660	pci/L	U	0.029	pci/L	UJ	0.410	pci/L	J
PU-239/240	1.810	pci/L	J	0.061	pci/L	UJ	0.220	pci/L	J
RA-226	0.110	pci/L	UJ	0.035	pci/L	UJ	0.143	pci/L	UJ
RA-228	1.960	pci/L	UJ	2.560	pci/L	UJ	2.450	pci/L	U
RU-106	158.000	pci/L	UJ	165.000	pci/L	UJ	130.000	pci/L	UJ
SR-90	0.590	pci/L	UJ	1.400	pci/L	UJ	0.805	pci/L	UJ
TC-99	12.900	pci/L	UJ	1.370	pci/L	U	7.800	pci/L	UJ
TH-228	0.480	pci/L	UJ	0.400	pci/L	UJ	0.165	pci/L	UJ
TH-230	1.965	pci/L	J	0.420	pci/L	UJ	0.271	pci/L	U
TH-232	0.320	pci/L	UJ	0.210	pci/L	UJ	0.057	pci/L	UJ
TH-TOTAL	2.900	ug/L	UJ	1.930	ug/L	UJ	0.526	ug/L	UJ
U-234	0.110	pci/L	UJ	0.433	pci/L	U	0.125	pci/L	UJ
U-235/236	0.071	pci/L	J	0.170	pci/L	UJ	0.049	pci/L	UJ
U-238	0.130	pci/L	UJ	0.296	pci/L	U	0.039	pci/L	UJ
U-TOTAL	1.000	ug/L	U	5.000	ug/L	U	1.000	ug/L	U

0908

5174

TABLE F-13
(Continued)

PHASE II - CHEMICAL PARAMETERS

QC TYPE	TRIP BLANK				FIELD BLANK				FIELD BLANK			
SAMPLE NUMBER	112885				110310				113299			
ASSOCIATED SAMPLES	112883				110312, 110315				112013, 112014, 113294			
SAMPLING DATE	04/22/93				03/18/93				05/04/93			
CHEMICAL PARAMETERS	RESULTS	UNITS	L	VQ	RESULTS	UNITS	L	VQ	RESULTS	UNITS	L	VQ
Volatile Organics												
1,1,1-Trichloroethane	0.010	mg/L	C	U	0.010	mg/L	C	U	0.010	mg/L	C	U
1,1,2,2-Tetrachloroethane	0.010	mg/L	C	U	0.010	mg/L	C	U	0.010	mg/L	C	U
1,1,2-Trichloroethane	0.010	mg/L	C	U	0.010	mg/L	C	U	0.010	mg/L	C	U
1,1-Dichloroethane	0.010	mg/L	C	U	0.010	mg/L	C	U	0.010	mg/L	C	UJ
1,1-Dichloroethene	0.010	mg/L	C	U	0.010	mg/L	C	U	0.010	mg/L	C	U
1,2-Dichloroethane	0.010	mg/L	C	U	0.010	mg/L	C	U	0.010	mg/L	C	U
1,2-Dichloroethene	0.010	mg/L	C	U	0.010	mg/L	C	U	0.010	mg/L	C	U
1,2-Dichloropropane	0.010	mg/L	C	U	0.010	mg/L	C	U	0.010	mg/L	C	U
2-Butanone	0.004	mg/L	C	J	0.010	mg/L	C	U	0.010	mg/L	C	UJ
2-Hexanone	0.010	mg/L	C	UJ	0.010	mg/L	C	U	0.010	mg/L	C	U
4-Methyl-2-pentanone	0.010	mg/L	C	UJ	0.010	mg/L	C	U	0.010	mg/L	C	U
Acetone	0.039	mg/L	C	-	0.010	mg/L	C	U	0.009	mg/L	C	R
Benzene	0.010	mg/L	C	U	0.010	mg/L	C	U	0.010	mg/L	C	U
Bromodichloromethane	0.010	mg/L	C	U	0.010	mg/L	C	U	0.010	mg/L	C	U
Bromoform	0.010	mg/L	C	U	0.010	mg/L	C	U	0.010	mg/L	C	U
Bromomethane	0.010	mg/L	C	U	0.010	mg/L	C	UJ	0.010	mg/L	C	U
Carbon Tetrachloride	0.010	mg/L	C	U	0.010	mg/L	C	U	0.010	mg/L	C	U
Carbon disulfide	0.010	mg/L	C	U	0.010	mg/L	C	U	0.010	mg/L	C	UJ
Chlorobenzene	0.010	mg/L	C	U	0.010	mg/L	C	U	0.010	mg/L	C	U
Chloroethane	0.010	mg/L	C	U	0.010	mg/L	C	U	0.010	mg/L	C	UJ
Chloroform	0.010	mg/L	C	U	0.010	mg/L	C	U	0.003	mg/L	C	J
Chloromethane	0.010	mg/L	C	U	0.010	mg/L	C	U	0.010	mg/L	C	R
Dibromochloromethane	0.010	mg/L	C	U	0.010	mg/L	C	U	0.010	mg/L	C	U
Ethylbenzene	0.010	mg/L	C	U	0.010	mg/L	C	U	0.010	mg/L	C	U
Methylene chloride	0.010	mg/L	C	UJ	0.010	mg/L	C	U	0.010	mg/L	C	UJ
Styrene	0.010	mg/L	C	U	0.010	mg/L	C	U	0.010	mg/L	C	U
Tetrachloroethene	0.010	mg/L	C	U	0.010	mg/L	C	U	0.010	mg/L	C	U
Toluene	0.010	mg/L	C	U	0.010	mg/L	C	U	0.010	mg/L	C	U
Trichloroethene	0.010	mg/L	C	U	0.010	mg/L	C	U	0.010	mg/L	C	U
Vinyl Acetate	0.010	mg/L	C	U	0.010	mg/L	C	U	0.010	mg/L	C	UJ
Vinyl chloride	0.010	mg/L	C	U	0.010	mg/L	C	U	0.010	mg/L	C	UJ
Xylenes, Total	0.010	mg/L	C	U	0.010	mg/L	C	U	0.010	mg/L	C	U
cis-1,3-Dichloropropene	0.010	mg/L	C	U	0.010	mg/L	C	U	0.010	mg/L	C	U
trans-1,3-Dichloropropene	0.010	mg/L	C	U	0.010	mg/L	C	U	0.010	mg/L	C	U

TABLE F-13
(Continued)

PHASE II - CHEMICAL PARAMETERS

QC TYPE	FIELD BLANK				RINSATE				RINSATE			
SAMPLE NUMBER	113317				110346				113321			
ASSOCIATED SAMPLES	113320				110392, 110396, 110385, 110389				113319			
SAMPLING DATE	05/28/93				03/22/93				06/03/93			
CHEMICAL PARAMETERS	RESULTS	UNITS	L	VQ	RESULTS	UNITS	L	VQ	RESULTS	UNITS	L	VQ
Inorganics												
Aluminum	0.084	mg/L	C	U	0.080	mg/L	C	U	0.036	mg/L	C	U
Antimony	0.005	mg/L	C	UJ	0.005	mg/L	C	U	0.005	mg/L	C	UJ
Arsenic	0.002	mg/L	C	R	0.031	mg/L	C	J	0.002	mg/L	C	R
Barium	0.002	mg/L	C	U	0.002	mg/L	C	U	0.002	mg/L	C	U
Beryllium	0.002	mg/L	C	U	0.002	mg/L	C	U	0.002	mg/L	C	U
Cadmium	0.005	mg/L	C	UJ	0.005	mg/L	C	U	0.005	mg/L	C	UJ
Calcium	0.020	mg/L	C	U	0.267	mg/L	C	U	0.020	mg/L	C	U
Chromium	0.010	mg/L	C	UJ	0.010	mg/L	C	U	0.010	mg/L	C	UJ
Cobalt	0.010	mg/L	C	U	0.010	mg/L	C	U	0.010	mg/L	C	U
Copper	0.010	mg/L	C	U	0.010	mg/L	C	U	0.010	mg/L	C	U
Cyanide	0.002	mg/L	C	U	0.002	mg/L	C	U	0.002	mg/L	C	U
Iron	0.020	mg/L	C	U	0.020	mg/L	C	U	0.020	mg/L	C	U
Lead	0.002	mg/L	C	U	0.002	mg/L	C	U	0.002	mg/L	C	U
Magnesium	0.050	mg/L	C	U	0.050	mg/L	C	U	0.050	mg/L	C	U
Manganese	0.010	mg/L	C	U	0.010	mg/L	C	U	0.010	mg/L	C	U
Mercury	0.000	mg/L	C	U	0.000	mg/L	C	U	0.000	mg/L	C	U
Molybdenum	0.010	mg/L	C	U	0.020	mg/L	C	U	0.010	mg/L	C	U
Nickel	0.020	mg/L	C	UJ	0.020	mg/L	C	U	0.020	mg/L	C	UJ
Potassium	0.100	mg/L	C	U	0.100	mg/L	C	U	0.100	mg/L	C	U
Selenium	0.002	mg/L	C	UJ	0.006	mg/L	C	J	0.002	mg/L	C	UJ
Silicon	0.185	mg/L	C	UJ	0.100	mg/L	C	U	0.062	mg/L	C	UJ
Silver	0.010	mg/L	C	U	0.010	mg/L	C	U	0.010	mg/L	C	U
Sodium	0.100	mg/L	C	U	0.100	mg/L	C	U	0.100	mg/L	C	U
Thallium	0.002	mg/L	C	UJ	0.002	mg/L	C	U	0.002	mg/L	C	UJ
Vanadium	0.010	mg/L	C	U	0.010	mg/L	C	U	0.010	mg/L	C	U
Zinc	0.005	mg/L	C	UJ	0.018	mg/L	C	-	0.006	mg/L	C	J
Volatile Organics												
1,1,1-Trichloroethane	0.010	mg/L	C	U	0.010	mg/L	C	U	0.010	mg/L	C	U
1,1,2,2-Tetrachloroethane	0.010	mg/L	C	U	0.010	mg/L	C	U	0.010	mg/L	C	U
1,1,2-Trichloroethane	0.010	mg/L	C	U	0.010	mg/L	C	U	0.010	mg/L	C	U
1,1-Dichloroethane	0.010	mg/L	C	U	0.010	mg/L	C	U	0.010	mg/L	C	U
1,1-Dichloroethene	0.010	mg/L	C	U	0.010	mg/L	C	U	0.010	mg/L	C	U
1,2-Dichloroethane	0.010	mg/L	C	U	0.010	mg/L	C	U	0.010	mg/L	C	U
1,2-Dichloroethene	0.010	mg/L	C	U	0.010	mg/L	C	U	0.010	mg/L	C	U
1,2-Dichloropropane	0.010	mg/L	C	U	0.010	mg/L	C	U	0.010	mg/L	C	U
2-Butanone	0.010	mg/L	C	U	0.010	mg/L	C	U	0.010	mg/L	C	U
2-Hexanone	0.010	mg/L	C	U	0.010	mg/L	C	U	0.010	mg/L	C	U
4-Methyl-2-pentanone	0.010	mg/L	C	U	0.010	mg/L	C	U	0.010	mg/L	C	U
Acetone	0.010	mg/L	C	UJ	0.010	mg/L	C	U	0.010	mg/L	C	U
Benzene	0.010	mg/L	C	U	0.010	mg/L	C	U	0.010	mg/L	C	U

0310

5174

TABLE F-13
(Continued)

PHASE II - CHEMICAL PARAMETERS

QC TYPE	FIELD BLANK				RINSATE				RINSATE			
SAMPLE NUMBER	113317				110346				113321			
ASSOCIATED SAMPLES	113320				110392, 110396, 110385, 110389				113319			
SAMPLING DATE	05/28/93				03/22/93				06/03/93			
CHEMICAL PARAMETERS	RESULTS	UNITS	L	VQ	RESULTS	UNITS	L	VQ	RESULTS	UNITS	L	VQ
Volatile Organics												
Bromodichloromethane	0.010	mg/L	C	U	0.010	mg/L	C	U	0.010	mg/L	C	U
Bromoform	0.010	mg/L	C	U	0.010	mg/L	C	U	0.010	mg/L	C	U
Bromomethane	0.010	mg/L	C	U	0.010	mg/L	C	U	0.010	mg/L	C	U
Carbon Tetrachloride	0.010	mg/L	C	U	0.010	mg/L	C	U	0.010	mg/L	C	U
Carbon disulfide	0.010	mg/L	C	U	0.010	mg/L	C	U	0.010	mg/L	C	U
Chlorobenzene	0.010	mg/L	C	U	0.010	mg/L	C	U	0.010	mg/L	C	U
Chloroethane	0.010	mg/L	C	UJ	0.010	mg/L	C	U	0.010	mg/L	C	U
Chloroform	0.010	mg/L	C	U	0.007	mg/L	C	J	0.001	mg/L	C	J
Chloromethane	0.010	mg/L	C	UJ	0.010	mg/L	C	U	0.010	mg/L	C	U
Dibromochloromethane	0.010	mg/L	C	U	0.010	mg/L	C	U	0.010	mg/L	C	U
Ethylbenzene	0.010	mg/L	C	U	0.010	mg/L	C	U	0.010	mg/L	C	U
Methylene chloride	0.010	mg/L	C	UJ	0.010	mg/L	C	U	0.010	mg/L	C	U
Styrene	0.010	mg/L	C	U	0.010	mg/L	C	U	0.010	mg/L	C	U
Tetrachloroethene	0.010	mg/L	C	UJ	0.010	mg/L	C	U	0.010	mg/L	C	U
Toluene	0.010	mg/L	C	U	0.010	mg/L	C	U	0.010	mg/L	C	U
Trichloroethene	0.010	mg/L	C	U	0.010	mg/L	C	U	0.010	mg/L	C	U
Vinyl Acetate	0.010	mg/L	C	U	0.010	mg/L	C	U	0.010	mg/L	C	U
Vinyl chloride	0.010	mg/L	C	U	0.010	mg/L	C	U	0.010	mg/L	C	U
Xylenes, Total	0.010	mg/L	C	U	0.010	mg/L	C	U	0.010	mg/L	C	U
cis-1,3-Dichloropropene	0.010	mg/L	C	U	0.010	mg/L	C	U	0.010	mg/L	C	U
trans-1,3-Dichloropropene	0.010	mg/L	C	U	0.010	mg/L	C	U	0.010	mg/L	C	U
Semivolatile Organics												
1,2,4-Trichlorobenzene	0.010	mg/L	C	U	0.010	mg/L	C	U	0.010	mg/L	C	U
1,2-Dichlorobenzene	0.010	mg/L	C	U	0.010	mg/L	C	U	0.010	mg/L	C	U
1,2-Diphenylhydrazine	NA				0.010	mg/L	C	U	NA			
1,3-Dichlorobenzene	0.010	mg/L	C	U	0.010	mg/L	C	U	0.010	mg/L	C	U
1,4-Dichlorobenzene	0.010	mg/L	C	U	0.010	mg/L	C	U	0.010	mg/L	C	U
2,4,5-Trichlorophenol	0.025	mg/L	C	U	0.025	mg/L	C	U	0.025	mg/L	C	U
2,4,6-Trichlorophenol	0.010	mg/L	C	U	0.010	mg/L	C	U	0.010	mg/L	C	U
2,4-Dichlorophenol	0.010	mg/L	C	U	0.010	mg/L	C	U	0.010	mg/L	C	U
2,4-Dimethylphenol	0.010	mg/L	C	U	0.010	mg/L	C	U	0.010	mg/L	C	U
2,4-Dinitrophenol	0.025	mg/L	C	U	0.050	mg/L	C	U	0.025	mg/L	C	U
2,4-Dinitrotoluene	0.010	mg/L	C	U	0.010	mg/L	C	U	0.010	mg/L	C	U
2,6-Dinitrotoluene	0.010	mg/L	C	U	0.010	mg/L	C	U	0.010	mg/L	C	U
2-Benzyl-4-chlorophenol	NA				NA				0.010	mg/L	C	UJ
2-Chloronaphthalene	0.010	mg/L	C	U	0.010	mg/L	C	U	0.010	mg/L	C	U
2-Chlorophenol	0.010	mg/L	C	U	0.010	mg/L	C	U	0.010	mg/L	C	U
2-Methylnaphthalene	0.010	mg/L	C	U	0.010	mg/L	C	U	0.010	mg/L	C	U
2-Methylphenol	0.010	mg/L	C	U	0.010	mg/L	C	U	0.010	mg/L	C	U
2-Nitroaniline	0.025	mg/L	C	U	0.025	mg/L	C	U	0.025	mg/L	C	U

TABLE F-13
(Continued)

PHASE II - CHEMICAL PARAMETERS

QC TYPE	FIELD BLANK				RINSATE				RINSATE			
SAMPLE NUMBER	113317				110346				113321			
ASSOCIATED SAMPLES	113320				110392, 110396, 110385, 110389				113319			
SAMPLING DATE	05/28/93				03/22/93				06/03/93			
CHEMICAL PARAMETERS	RESULTS	UNITS	L	VQ	RESULTS	UNITS	L	VQ	RESULTS	UNITS	L	VQ
Semivolatile Organics												
2-Nitrophenol	0.010	mg/L	C	U	0.010	mg/L	C	U	0.010	mg/L	C	U
3,3'-Dichlorobenzidine	0.010	mg/L	C	U	0.010	mg/L	C	U	0.010	mg/L	C	U
3-Nitroaniline	0.025	mg/L	C	R	0.025	mg/L	C	U	0.025	mg/L	C	U
4,6-Dinitro-2-methylphenol	0.025	mg/L	C	U	0.025	mg/L	C	U	0.025	mg/L	C	U
4-Bromophenyl phenyl ether	0.010	mg/L	C	U	0.010	mg/L	C	U	0.010	mg/L	C	U
4-Chloro-3-methylphenol	0.010	mg/L	C	U	0.010	mg/L	C	U	0.010	mg/L	C	U
4-Chlorophenylphenyl ether	0.010	mg/L	C	U	0.010	mg/L	C	U	0.010	mg/L	C	U
4-Methylphenol	0.010	mg/L	C	U	0.010	mg/L	C	U	0.010	mg/L	C	U
4-Nitroaniline	0.025	mg/L	C	UJ	0.025	mg/L	C	U	0.025	mg/L	C	U
4-Nitrophenol	0.025	mg/L	C	U	0.025	mg/L	C	U	0.025	mg/L	C	U
Acenaphthene	0.010	mg/L	C	U	0.010	mg/L	C	U	0.010	mg/L	C	U
Acenaphthylene	0.010	mg/L	C	U	0.010	mg/L	C	U	0.010	mg/L	C	U
Anthracene	0.010	mg/L	C	U	0.010	mg/L	C	U	0.010	mg/L	C	U
Benzo(a)anthracene	0.010	mg/L	C	U	0.010	mg/L	C	U	0.010	mg/L	C	U
Benzo(a)pyrene	0.010	mg/L	C	U	0.010	mg/L	C	U	0.010	mg/L	C	U
Benzo(b)fluoranthene	0.010	mg/L	C	U	0.010	mg/L	C	U	0.010	mg/L	C	U
Benzo(g,h,i)perylene	0.010	mg/L	C	U	0.010	mg/L	C	U	0.010	mg/L	C	U
Benzo(k)fluoranthene	0.010	mg/L	C	U	0.010	mg/L	C	U	0.010	mg/L	C	U
Benzoic acid	NA				0.050	mg/L	C	U	0.050	mg/L	C	UJ
Benzyl alcohol	NA				0.010	mg/L	C	U	0.010	mg/L	C	R
Butyl benzyl phthalate	0.010	mg/L	C	U	0.010	mg/L	C	U	0.010	mg/L	C	U
Carbazole	0.010	mg/L	C	U	0.010	mg/L	C	U	0.010	mg/L	C	U
Chrysene	0.010	mg/L	C	U	0.010	mg/L	C	U	0.010	mg/L	C	U
Di-n-butyl phthalate	0.010	mg/L	C	U	0.010	mg/L	C	U	0.010	mg/L	C	U
Di-n-octyl phthalate	0.010	mg/L	C	U	0.010	mg/L	C	U	0.010	mg/L	C	U
Dibenzo(a,h)anthracene	0.010	mg/L	C	U	0.010	mg/L	C	U	0.010	mg/L	C	U
Dibenzofuran	0.010	mg/L	C	U	0.010	mg/L	C	U	0.010	mg/L	C	U
Diethyl phthalate	0.010	mg/L	C	U	0.010	mg/L	C	U	0.010	mg/L	C	U
Dimethyl phthalate	0.010	mg/L	C	U	0.010	mg/L	C	U	0.010	mg/L	C	U
Fluoranthene	0.010	mg/L	C	U	0.010	mg/L	C	U	0.010	mg/L	C	U
Fluorene	0.010	mg/L	C	U	0.010	mg/L	C	U	0.010	mg/L	C	U
Hexachlorobenzene	0.010	mg/L	C	U	0.010	mg/L	C	U	0.010	mg/L	C	U
Hexachlorobutadiene	0.010	mg/L	C	U	0.010	mg/L	C	U	0.010	mg/L	C	U
Hexachlorocyclopentadiene	0.010	mg/L	C	U	0.010	mg/L	C	U	0.010	mg/L	C	U
Hexachloroethane	0.010	mg/L	C	U	0.010	mg/L	C	U	0.010	mg/L	C	U
Indeno(1,2,3-cd)pyrene	0.010	mg/L	C	U	0.010	mg/L	C	U	0.010	mg/L	C	U
Isophorone	0.010	mg/L	C	U	0.010	mg/L	C	U	0.010	mg/L	C	U
N-Nitroso-di-n-propylamine	0.010	mg/L	C	U	0.010	mg/L	C	U	0.010	mg/L	C	U
N-Nitrosodimethylamine	NA				0.010	mg/L	C	U	0.010	mg/L	C	U
N-Nitrosodiphenylamine	0.010	mg/L	C	U	0.010	mg/L	C	U	0.010	mg/L	C	U
Naphthalene	0.010	mg/L	C	U	0.010	mg/L	C	U	0.010	mg/L	C	U
Nitrobenzene	0.010	mg/L	C	U	0.010	mg/L	C	U	0.010	mg/L	C	U

TABLE F-13
(Continued)

PHASE II - CHEMICAL PARAMETERS

QC TYPE	FIELD BLANK				RINSATE				RINSATE			
SAMPLE NUMBER	113317				110346				113321			
ASSOCIATED SAMPLES	113320				110392, 110396, 110385, 110389				113319			
SAMPLING DATE	05/28/93				03/22/93				06/03/93			
CHEMICAL PARAMETERS	RESULTS	UNITS	L	VQ	RESULTS	UNITS	L	VQ	RESULTS	UNITS	L	VQ
Semivolatile Organics												
Pentachlorophenol	0.025	mg/L	C	U	0.025	mg/L	C	U	0.025	mg/L	C	U
Phenanthrene	0.010	mg/L	C	U	0.010	mg/L	C	U	0.010	mg/L	C	U
Phenol	0.010	mg/L	C	U	0.010	mg/L	C	U	0.010	mg/L	C	U
Pyrene	0.010	mg/L	C	U	0.010	mg/L	C	U	0.010	mg/L	C	U
Tributyl phosphate	NA				0.010	mg/L	C	U	0.010	mg/L	C	U
bis(2-Chloroethoxy)methane	0.010	mg/L	C	U	0.010	mg/L	C	U	0.010	mg/L	C	U
bis(2-Chloroethyl)ether	0.010	mg/L	C	U	0.010	mg/L	C	U	0.010	mg/L	C	U
bis(2-Chloroisopropyl) ether	0.010	mg/L	C	U	0.010	mg/L	C	U	0.010	mg/L	C	U
bis(2-Ethylhexyl) phthalate	0.010	mg/L	C	U	0.010	mg/L	C	U	0.010	mg/L	C	U
p-Chloroaniline	0.010	mg/L	C	UJ	0.010	mg/L	C	U	0.010	mg/L	C	U
Pesticide Organics/PCBs												
4,4'-DDD	0.000	mg/L	C	U	0.000	mg/L	C	U	0.000	mg/L	C	U
4,4'-DDE	0.000	mg/L	C	U	0.000	mg/L	C	U	0.000	mg/L	C	U
4,4'-DDT	0.000	mg/L	C	U	0.000	mg/L	C	U	0.000	mg/L	C	U
Aldrin	0.000	mg/L	C	U	0.000	mg/L	C	U	0.000	mg/L	C	U
Aroclor-1016	0.001	mg/L	C	U	0.001	mg/L	C	UJ	0.001	mg/L	C	U
Aroclor-1221	0.002	mg/L	C	U	0.002	mg/L	C	UJ	0.002	mg/L	C	U
Aroclor-1232	0.001	mg/L	C	U	0.001	mg/L	C	UJ	0.001	mg/L	C	U
Aroclor-1242	0.001	mg/L	C	U	0.001	mg/L	C	UJ	0.001	mg/L	C	U
Aroclor-1248	0.001	mg/L	C	U	0.001	mg/L	C	UJ	0.001	mg/L	C	U
Aroclor-1254	0.001	mg/L	C	U	0.001	mg/L	C	UJ	0.001	mg/L	C	U
Aroclor-1260	0.001	mg/L	C	U	0.001	mg/L	C	UJ	0.001	mg/L	C	U
Dieldrin	0.000	mg/L	C	U	0.000	mg/L	C	U	0.000	mg/L	C	U
Endosulfan II	0.000	mg/L	C	U	0.000	mg/L	C	U	0.000	mg/L	C	U
Endosulfan sulfate	0.000	mg/L	C	U	0.000	mg/L	C	U	0.000	mg/L	C	U
Endosulfan-I	0.000	mg/L	C	U	0.000	mg/L	C	U	0.000	mg/L	C	U
Endrin	0.000	mg/L	C	U	0.000	mg/L	C	U	0.000	mg/L	C	U
Endrin aldehyde	0.000	mg/L	C	U	0.000	mg/L	C	U	0.000	mg/L	C	UJ
Endrin ketone	0.000	mg/L	C	U	0.000	mg/L	C	U	0.000	mg/L	C	U
Heptachlor	0.000	mg/L	C	U	0.000	mg/L	C	U	0.000	mg/L	C	U
Heptachlor epoxide	0.000	mg/L	C	U	0.000	mg/L	C	U	0.000	mg/L	C	U
Methoxychlor	0.001	mg/L	C	U	0.001	mg/L	C	U	0.001	mg/L	C	U
Toxaphene	0.005	mg/L	C	U	0.005	mg/L	C	U	0.005	mg/L	C	U
alpha-BHC	0.000	mg/L	C	U	0.000	mg/L	C	U	0.000	mg/L	C	U
alpha-Chlordane	0.000	mg/L	C	U	0.000	mg/L	C	U	0.000	mg/L	C	U
beta-BHC	0.000	mg/L	C	U	0.000	mg/L	C	U	0.000	mg/L	C	U
delta-BHC	0.000	mg/L	C	U	0.000	mg/L	C	U	0.000	mg/L	C	UJ
gamma-BHC (Lindane)	0.000	mg/L	C	U	0.000	mg/L	C	U	0.000	mg/L	C	U
gamma-Chlordane	0.000	mg/L	C	U	0.000	mg/L	C	U	0.000	mg/L	C	U
General Chemistry												
Alkalinity	2.600	mg/L	B	U	NA				2.400	mg/L	B	-

TABLE F-13
(Continued)

PHASE II - CHEMICAL PARAMETERS

QC TYPE	FIELD BLAN				RINSATE				RINSATE			
SAMPLE NUMBER	113317				110346				113321			
ASSOCIATED SAMPLES	113320				110392, 110396, 110385, 110389				113319			
SAMPLING DATE	05/28/93				03/22/93				06/03/93			
CHEMICAL PARAMETERS	RESULTS	UNITS	L	VQ	RESULTS	UNITS	L	VQ	RESULTS	UNITS	L	VQ
General Chemistry												
Ammonia	0.100	mg/L	C	U	NA				0.100	mg/L	B	U
Chloride	0.500	mg/L	C	U	NA				0.500	mg/L	B	U
Fluoride	0.050	mg/L	B	U	NA				0.050	mg/L	B	U
Nitrate	0.100	mg/L	B	R	NA				0.100	mg/L	B	R
Phenols	0.010	mg/L	B	U	NA				0.010	mg/L	B	U
Sulfate	2.000	mg/L	B	U	NA				2.000	mg/L	B	U
Sulfide	0.500	mg/L	B	U	NA				23.300	mg/L	B	-
Total Kjeldahl Nitrogen	NA				NA				0.500	mg/L	B	U
Total Organic Carbon	1.000	mg/L	B	U	NA				1.000	mg/L	B	U
Total Organic Halides	0.010	mg/L	C	R	NA				0.010	mg/L	B	U
Total Organic Nitrogen	0.100	mg/L	C	U	NA				0.100	mg/L	B	U
Total Phosphorous	0.040	mg/L	C	J	NA				0.020	mg/L	B	U

0914

5174

TABLE F-13
(Continued)

PHASE II - CHEMICAL PARAMETERS

QC TYPE	TRIP BLANK	TRIP BLANK	TRIP BLANK
SAMPLE NUMBER	113106	110288	110291
ASSOCIATED SAMPLES	113104, 113105	110287	110290, 110294
SAMPLING DATE	05/28/93	03/18/93	03/19/93

CHEMICAL PARAMETERS	RESULTS	UNITS	L	VQ	RESULTS	UNITS	L	VQ	RESULTS	UNITS	L	VQ
Volatile Organics												
1,1,1-Trichloroethane	0.010	mg/L	C	U	0.010	mg/L	C	U	0.010	mg/L	C	U
1,1,2,2-Tetrachloroethane	0.010	mg/L	C	U	0.010	mg/L	C	U	0.010	mg/L	C	U
1,1,2-Trichloroethane	0.010	mg/L	C	U	0.010	mg/L	C	U	0.010	mg/L	C	U
1,1-Dichloroethane	0.010	mg/L	C	U	0.010	mg/L	C	U	0.010	mg/L	C	U
1,1-Dichloroethene	0.010	mg/L	C	U	0.010	mg/L	C	U	0.010	mg/L	C	U
1,2-Dichloroethane	0.010	mg/L	C	U	0.010	mg/L	C	U	0.010	mg/L	C	U
1,2-Dichloroethene	0.010	mg/L	C	U	0.010	mg/L	C	U	0.010	mg/L	C	U
1,2-Dichloropropane	0.010	mg/L	C	U	0.010	mg/L	C	U	0.010	mg/L	C	U
2-Butanone	0.010	mg/L	C	U	0.010	mg/L	C	U	0.010	mg/L	C	U
2-Hexanone	0.010	mg/L	C	U	0.010	mg/L	C	U	0.010	mg/L	C	U
4-Methyl-2-pentanone	0.010	mg/L	C	U	0.010	mg/L	C	U	0.010	mg/L	C	U
Acetone	0.010	mg/L	C	U	0.022	mg/L	C	J	0.027	mg/L	C	J
Benzene	0.010	mg/L	C	U	0.010	mg/L	C	U	0.010	mg/L	C	U
Bromodichloromethane	0.010	mg/L	C	U	0.010	mg/L	C	U	0.010	mg/L	C	U
Bromoform	0.010	mg/L	C	UJ	0.010	mg/L	C	U	0.010	mg/L	C	U
Bromomethane	0.010	mg/L	C	U	0.010	mg/L	C	UJ	0.010	mg/L	C	UJ
Carbon Tetrachloride	0.010	mg/L	C	U	0.010	mg/L	C	U	0.010	mg/L	C	U
Carbon disulfide	0.010	mg/L	C	U	0.010	mg/L	C	U	0.010	mg/L	C	U
Chlorobenzene	0.010	mg/L	C	U	0.010	mg/L	C	U	0.010	mg/L	C	U
Chloroethane	0.010	mg/L	C	U	0.010	mg/L	C	U	0.003	mg/L	C	J
Chloroform	0.010	mg/L	C	U	0.010	mg/L	C	U	0.010	mg/L	C	U
Chloromethane	0.010	mg/L	C	U	0.010	mg/L	C	U	0.010	mg/L	C	U
Dibromochloromethane	0.010	mg/L	C	U	0.010	mg/L	C	U	0.010	mg/L	C	U
Ethylbenzene	0.010	mg/L	C	U	0.010	mg/L	C	U	0.010	mg/L	C	U
Methylene chloride	0.010	mg/L	C	U	0.010	mg/L	C	U	0.010	mg/L	C	U
Styrene	0.010	mg/L	C	U	0.010	mg/L	C	U	0.010	mg/L	C	U
Tetrachloroethene	0.010	mg/L	C	U	0.010	mg/L	C	U	0.010	mg/L	C	U
Toluene	0.010	mg/L	C	U	0.010	mg/L	C	U	0.010	mg/L	C	U
Trichloroethene	0.010	mg/L	C	U	0.010	mg/L	C	U	0.010	mg/L	C	U
Vinyl Acetate	0.010	mg/L	C	U	0.010	mg/L	C	U	0.010	mg/L	C	U
Vinyl chloride	0.010	mg/L	C	U	0.010	mg/L	C	U	0.010	mg/L	C	U
Xylenes, Total	0.010	mg/L	C	U	0.010	mg/L	C	U	0.010	mg/L	C	U
cis-1,3-Dichloropropene	0.010	mg/L	C	U	0.010	mg/L	C	U	0.010	mg/L	C	U
trans-1,3-Dichloropropene	0.010	mg/L	C	U	0.010	mg/L	C	U	0.010	mg/L	C	U

TABLE F-13
(Continued)

PHASE II - CHEMICAL PARAMETERS

QC TYPE	TRIP BLANK				TRIP BLANK				TRIP BLANK			
SAMPLE NUMBER	110298				110300				110308			
ASSOCIATED SAMPLES	110297				110301				110307			
SAMPLING DATE	03/18/93				03/19/93				03/18/93			
CHEMICAL PARAMETERS	RESULTS	UNITS	L	VQ	RESULTS	UNITS	L	VQ	RESULTS	UNITS	L	VQ
Volatile Organics												
1,1,1-Trichloroethane	0.010	mg/L	C	U	0.010	mg/L	C	U	0.010	mg/L	C	U
1,1,2,2-Tetrachloroethane	0.010	mg/L	C	U	0.010	mg/L	C	U	0.010	mg/L	C	U
1,1,2-Trichloroethane	0.010	mg/L	C	U	0.010	mg/L	C	U	0.010	mg/L	C	U
1,1-Dichloroethane	0.010	mg/L	C	U	0.010	mg/L	C	U	0.010	mg/L	C	U
1,1-Dichloroethene	0.010	mg/L	C	U	0.010	mg/L	C	U	0.010	mg/L	C	U
1,2-Dichloroethane	0.010	mg/L	C	U	0.010	mg/L	C	U	0.010	mg/L	C	U
1,2-Dichloroethene	0.010	mg/L	C	U	0.010	mg/L	C	U	0.010	mg/L	C	U
1,2-Dichloropropane	0.010	mg/L	C	U	0.010	mg/L	C	U	0.010	mg/L	C	U
2-Butanone	0.010	mg/L	C	U	0.010	mg/L	C	U	0.010	mg/L	C	U
2-Hexanone	0.010	mg/L	C	U	0.010	mg/L	C	U	0.010	mg/L	C	U
4-Methyl-2-pentanone	0.010	mg/L	C	U	0.010	mg/L	C	U	0.010	mg/L	C	U
Acetone	0.033	mg/L	C	J	0.038	mg/L	C	J	0.029	mg/L	C	J
Benzene	0.010	mg/L	C	U	0.010	mg/L	C	U	0.010	mg/L	C	U
Bromodichloromethane	0.010	mg/L	C	U	0.010	mg/L	C	U	0.010	mg/L	C	U
Bromoform	0.010	mg/L	C	U	0.010	mg/L	C	U	0.010	mg/L	C	U
Bromomethane	0.010	mg/L	C	UJ	0.010	mg/L	C	UJ	0.010	mg/L	C	UJ
Carbon Tetrachloride	0.010	mg/L	C	U	0.010	mg/L	C	U	0.010	mg/L	C	U
Carbon disulfide	0.010	mg/L	C	U	0.010	mg/L	C	U	0.010	mg/L	C	U
Chlorobenzene	0.010	mg/L	C	U	0.010	mg/L	C	U	0.010	mg/L	C	U
Chloroethane	0.003	mg/L	C	J	0.010	mg/L	C	U	0.010	mg/L	C	U
Chloroform	0.010	mg/L	C	U	0.010	mg/L	C	U	0.010	mg/L	C	U
Chloromethane	0.010	mg/L	C	U	0.010	mg/L	C	U	0.010	mg/L	C	U
Dibromochloromethane	0.010	mg/L	C	U	0.010	mg/L	C	U	0.010	mg/L	C	U
Ethylbenzene	0.010	mg/L	C	U	0.010	mg/L	C	U	0.010	mg/L	C	U
Methylene chloride	0.010	mg/L	C	U	0.010	mg/L	C	U	0.010	mg/L	C	U
Styrene	0.010	mg/L	C	U	0.010	mg/L	C	U	0.010	mg/L	C	U
Tetrachloroethene	0.010	mg/L	C	U	0.010	mg/L	C	U	0.010	mg/L	C	U
Toluene	0.010	mg/L	C	U	0.010	mg/L	C	U	0.010	mg/L	C	U
Trichloroethene	0.010	mg/L	C	U	0.010	mg/L	C	U	0.010	mg/L	C	U
Vinyl Acetate	0.010	mg/L	C	U	0.010	mg/L	C	U	0.010	mg/L	C	U
Vinyl chloride	0.010	mg/L	C	U	0.010	mg/L	C	U	0.010	mg/L	C	U
Xylenes, Total	0.010	mg/L	C	U	0.010	mg/L	C	U	0.010	mg/L	C	U
cis-1,3-Dichloropropene	0.010	mg/L	C	U	0.010	mg/L	C	U	0.010	mg/L	C	U
trans-1,3-Dichloropropene	0.010	mg/L	C	U	0.010	mg/L	C	U	0.010	mg/L	C	U

0916

51784

TABLE F-13
(Continued)

PHASE II - CHEMICAL PARAMETERS

QC TYPE	TRIP BLANK	TRIP BLANK	TRIP BLANK
SAMPLE NUMBER	110311	110320	110325
ASSOCIATED SAMPLES	110312, 110315	110317, 110321	110324, 110327
SAMPLING DATE	03/19/93	03/19/93	03/22/93

CHEMICAL PARAMETERS	RESULTS	UNITS	L	VQ	RESULTS	UNITS	L	VQ	RESULTS	UNITS	L	VQ
Volatile Organics												
1,1,1-Trichloroethane	0.010	mg/L	C	U	0.010	mg/L	C	U	0.010	mg/L	C	U
1,1,2,2-Tetrachloroethane	0.010	mg/L	C	U	0.010	mg/L	C	U	0.010	mg/L	C	U
1,1,2-Trichloroethane	0.010	mg/L	C	U	0.010	mg/L	C	U	0.010	mg/L	C	U
1,1-Dichloroethane	0.010	mg/L	C	U	0.010	mg/L	C	U	0.010	mg/L	C	U
1,1-Dichloroethene	0.010	mg/L	C	U	0.010	mg/L	C	U	0.010	mg/L	C	U
1,2-Dichloroethane	0.010	mg/L	C	U	0.010	mg/L	C	U	0.010	mg/L	C	U
1,2-Dichloroethene	0.010	mg/L	C	U	0.010	mg/L	C	U	0.010	mg/L	C	U
1,2-Dichloropropane	0.010	mg/L	C	U	0.010	mg/L	C	U	0.010	mg/L	C	U
2-Butanone	0.010	mg/L	C	U	0.010	mg/L	C	U	0.010	mg/L	C	U
2-Hexanone	0.010	mg/L	C	U	0.010	mg/L	C	U	0.010	mg/L	C	U
4-Methyl-2-pentanone	0.010	mg/L	C	U	0.010	mg/L	C	U	0.010	mg/L	C	U
Acetone	0.038	mg/L	C	J	0.051	mg/L	C	-	0.029	mg/L	C	J
Benzene	0.010	mg/L	C	U	0.010	mg/L	C	U	0.010	mg/L	C	U
Bromodichloromethane	0.010	mg/L	C	U	0.010	mg/L	C	U	0.010	mg/L	C	U
Bromoform	0.010	mg/L	C	U	0.010	mg/L	C	U	0.010	mg/L	C	U
Bromomethane	0.010	mg/L	C	UJ	0.010	mg/L	C	U	0.010	mg/L	C	U
Carbon Tetrachloride	0.010	mg/L	C	U	0.010	mg/L	C	U	0.010	mg/L	C	U
Carbon disulfide	0.010	mg/L	C	U	0.010	mg/L	C	U	0.010	mg/L	C	U
Chlorobenzene	0.010	mg/L	C	U	0.010	mg/L	C	U	0.010	mg/L	C	U
Chloroethane	0.003	mg/L	C	J	0.003	mg/L	C	J	0.010	mg/L	C	U
Chloroform	0.010	mg/L	C	U	0.010	mg/L	C	U	0.010	mg/L	C	U
Chloromethane	0.010	mg/L	C	U	0.010	mg/L	C	UJ	0.010	mg/L	C	UJ
Dibromochloromethane	0.010	mg/L	C	U	0.010	mg/L	C	U	0.010	mg/L	C	U
Ethylbenzene	0.010	mg/L	C	U	0.010	mg/L	C	U	0.010	mg/L	C	U
Methylene chloride	0.010	mg/L	C	U	0.010	mg/L	C	U	0.010	mg/L	C	UJ
Styrene	0.010	mg/L	C	U	0.010	mg/L	C	U	0.010	mg/L	C	U
Tetrachloroethene	0.010	mg/L	C	U	0.010	mg/L	C	U	0.010	mg/L	C	U
Toluene	0.010	mg/L	C	U	0.010	mg/L	C	U	0.010	mg/L	C	U
Trichloroethene	0.010	mg/L	C	U	0.010	mg/L	C	U	0.010	mg/L	C	U
Vinyl Acetate	0.010	mg/L	C	U	0.010	mg/L	C	U	0.010	mg/L	C	UJ
Vinyl chloride	0.010	mg/L	C	U	0.010	mg/L	C	U	0.010	mg/L	C	U
Xylenes, Total	0.010	mg/L	C	U	0.010	mg/L	C	U	0.010	mg/L	C	U
cis-1,3-Dichloropropene	0.010	mg/L	C	U	0.010	mg/L	C	U	0.010	mg/L	C	U
trans-1,3-Dichloropropene	0.010	mg/L	C	U	0.010	mg/L	C	U	0.010	mg/L	C	U

TABLE F-13
(Continued)

PHASE II - CHEMICAL PARAMETERS

QC TYPE	TRIP BLANK				TRIP BLANK				TRIP BLANK			
SAMPLE NUMBER	110334				110347				110352			
ASSOCIATED SAMPLES	110331, 110335, 110338, 110339				110304, 110348				110351, 110355			
SAMPLING DATE	03/22/93				03/19/93				03/22/93			
CHEMICAL PARAMETERS	RESULTS	UNITS	L	VQ	RESULTS	UNITS	L	VQ	RESULTS	UNITS	L	VQ
Volatile Organics												
1,1,1-Trichloroethane	0.010	mg/L	C	U	0.010	mg/L	C	U	0.010	mg/L	C	U
1,1,2,2-Tetrachloroethane	0.010	mg/L	C	U	0.010	mg/L	C	U	0.010	mg/L	C	U
1,1,2-Trichloroethane	0.010	mg/L	C	U	0.010	mg/L	C	U	0.010	mg/L	C	U
1,1-Dichloroethane	0.010	mg/L	C	U	0.010	mg/L	C	U	0.010	mg/L	C	U
1,1-Dichloroethene	0.010	mg/L	C	U	0.010	mg/L	C	U	0.010	mg/L	C	U
1,2-Dichloroethane	0.010	mg/L	C	U	0.010	mg/L	C	U	0.010	mg/L	C	U
1,2-Dichloroethene	0.010	mg/L	C	U	0.010	mg/L	C	U	0.010	mg/L	C	U
1,2-Dichloropropane	0.010	mg/L	C	U	0.010	mg/L	C	U	0.010	mg/L	C	U
2-Butanone	0.010	mg/L	C	U	0.010	mg/L	C	U	0.010	mg/L	C	U
2-Hexanone	0.010	mg/L	C	U	0.010	mg/L	C	U	0.010	mg/L	C	U
4-Methyl-2-pentanone	0.010	mg/L	C	U	0.010	mg/L	C	U	0.010	mg/L	C	U
Acetone	0.050	mg/L	C	J	0.031	mg/L	C	-	0.067	mg/L	C	J
Benzene	0.010	mg/L	C	U	0.010	mg/L	C	U	0.010	mg/L	C	U
Bromodichloromethane	0.010	mg/L	C	U	0.010	mg/L	C	U	0.010	mg/L	C	U
Bromoform	0.010	mg/L	C	U	0.010	mg/L	C	U	0.010	mg/L	C	U
Bromomethane	0.010	mg/L	C	U	0.010	mg/L	C	U	0.010	mg/L	C	U
Carbon Tetrachloride	0.010	mg/L	C	U	0.010	mg/L	C	U	0.010	mg/L	C	U
Carbon disulfide	0.010	mg/L	C	U	0.010	mg/L	C	U	0.010	mg/L	C	U
Chlorobenzene	0.010	mg/L	C	U	0.010	mg/L	C	U	0.010	mg/L	C	U
Chloroethane	0.001	mg/L	C	J	0.003	mg/L	C	J	0.002	mg/L	C	J
Chloroform	0.010	mg/L	C	U	0.010	mg/L	C	U	0.010	mg/L	C	U
Chloromethane	0.010	mg/L	C	UJ	0.010	mg/L	C	UJ	0.010	mg/L	C	UJ
Dibromochloromethane	0.010	mg/L	C	U	0.010	mg/L	C	U	0.010	mg/L	C	U
Ethylbenzene	0.010	mg/L	C	U	0.010	mg/L	C	U	0.010	mg/L	C	U
Methylene chloride	0.010	mg/L	C	UJ	0.010	mg/L	C	U	0.010	mg/L	C	UJ
Styrene	0.010	mg/L	C	U	0.010	mg/L	C	U	0.010	mg/L	C	U
Tetrachloroethene	0.010	mg/L	C	U	0.010	mg/L	C	U	0.010	mg/L	C	U
Toluene	0.010	mg/L	C	U	0.010	mg/L	C	U	0.010	mg/L	C	U
Trichloroethene	0.010	mg/L	C	U	0.010	mg/L	C	U	0.010	mg/L	C	U
Vinyl Acetate	0.010	mg/L	C	UJ	0.010	mg/L	C	U	0.010	mg/L	C	UJ
Vinyl chloride	0.010	mg/L	C	U	0.010	mg/L	C	U	0.010	mg/L	C	U
Xylenes, Total	0.010	mg/L	C	U	0.010	mg/L	C	U	0.010	mg/L	C	U
cis-1,3-Dichloropropene	0.010	mg/L	C	U	0.010	mg/L	C	U	0.010	mg/L	C	U
trans-1,3-Dichloropropene	0.010	mg/L	C	U	0.010	mg/L	C	U	0.010	mg/L	C	U

0918

5174

TABLE F-13
(Continued)

PHASE II - CHEMICAL PARAMETERS

QC TYPE	TRIP BLANK	TRIP BLANK	TRIP BLANK
SAMPLE NUMBER	110361	110381	110388
ASSOCIATED SAMPLES	110358, 110362, 110372, 110373	110378, 110382	110385, 110389
SAMPLING DATE	03/22/93	03/19/93	03/22/93

CHEMICAL PARAMETERS	RESULTS	UNITS	L	VQ	RESULTS	UNITS	L	VQ	RESULTS	UNITS	L	VQ
Volatile Organics												
1,1,1-Trichloroethane	0.010	mg/L	C	U	0.010	mg/L	C	U	0.010	mg/L	C	U
1,1,2,2-Tetrachloroethane	0.010	mg/L	C	U	0.010	mg/L	C	U	0.010	mg/L	C	U
1,1,2-Trichloroethane	0.010	mg/L	C	U	0.010	mg/L	C	U	0.010	mg/L	C	U
1,1-Dichloroethane	0.010	mg/L	C	U	0.010	mg/L	C	U	0.010	mg/L	C	U
1,1-Dichloroethene	0.010	mg/L	C	U	0.010	mg/L	C	U	0.010	mg/L	C	U
1,2-Dichloroethane	0.010	mg/L	C	U	0.010	mg/L	C	U	0.010	mg/L	C	U
1,2-Dichloroethene	0.010	mg/L	C	U	0.010	mg/L	C	U	0.010	mg/L	C	U
1,2-Dichloropropane	0.010	mg/L	C	U	0.010	mg/L	C	U	0.010	mg/L	C	U
2-Butanone	0.010	mg/L	C	U	0.010	mg/L	C	U	0.010	mg/L	C	U
2-Hexanone	0.010	mg/L	C	U	0.010	mg/L	C	U	0.010	mg/L	C	U
4-Methyl-2-pentanone	0.010	mg/L	C	U	0.010	mg/L	C	U	0.010	mg/L	C	U
Acetone	0.026	mg/L	C	J	0.098	mg/L	C	-	0.055	mg/L	C	J
Benzene	0.010	mg/L	C	U	0.010	mg/L	C	U	0.010	mg/L	C	U
Bromodichloromethane	0.010	mg/L	C	U	0.010	mg/L	C	U	0.010	mg/L	C	U
Bromoform	0.010	mg/L	C	U	0.010	mg/L	C	U	0.010	mg/L	C	U
Bromomethane	0.010	mg/L	C	U	0.010	mg/L	C	U	0.010	mg/L	C	U
Carbon Tetrachloride	0.010	mg/L	C	U	0.010	mg/L	C	U	0.010	mg/L	C	U
Carbon disulfide	0.010	mg/L	C	U	0.010	mg/L	C	U	0.010	mg/L	C	U
Chlorobenzene	0.010	mg/L	C	U	0.010	mg/L	C	U	0.010	mg/L	C	U
Chloroethane	0.010	mg/L	C	U	0.003	mg/L	C	J	0.010	mg/L	C	U
Chloroform	0.010	mg/L	C	U	0.010	mg/L	C	U	0.010	mg/L	C	U
Chloromethane	0.010	mg/L	C	UJ	0.010	mg/L	C	UJ	0.010	mg/L	C	UJ
Dibromochloromethane	0.010	mg/L	C	U	0.010	mg/L	C	U	0.010	mg/L	C	U
Ethylbenzene	0.010	mg/L	C	U	0.010	mg/L	C	U	0.010	mg/L	C	U
Methylene chloride	0.010	mg/L	C	UJ	0.010	mg/L	C	U	0.010	mg/L	C	UJ
Styrene	0.010	mg/L	C	U	0.010	mg/L	C	U	0.010	mg/L	C	U
Tetrachloroethene	0.010	mg/L	C	U	0.010	mg/L	C	U	0.010	mg/L	C	U
Toluene	0.010	mg/L	C	U	0.010	mg/L	C	U	0.010	mg/L	C	U
Trichloroethene	0.010	mg/L	C	U	0.010	mg/L	C	U	0.010	mg/L	C	U
Vinyl Acetate	0.010	mg/L	C	UJ	0.010	mg/L	C	U	0.010	mg/L	C	UJ
Vinyl chloride	0.010	mg/L	C	U	0.010	mg/L	C	U	0.010	mg/L	C	U
Xylenes, Total	0.010	mg/L	C	U	0.010	mg/L	C	U	0.010	mg/L	C	U
cis-1,3-Dichloropropene	0.010	mg/L	C	U	0.010	mg/L	C	U	0.010	mg/L	C	U
trans-1,3-Dichloropropene	0.010	mg/L	C	U	0.010	mg/L	C	U	0.010	mg/L	C	U

TABLE F-13
(Continued)

PHASE II - CHEMICAL PARAMETERS

QC TYPE	TRIP BLANK				TRIP BLANK				TRIP BLANK			
SAMPLE NUMBER	110395				110404				110414			
ASSOCIATED SAMPLES	110392, 110396				110405, 110406				110413, 110415			
SAMPLING DATE	03/22/93				03/24/93				03/24/93			
CHEMICAL PARAMETERS	RESULTS	UNITS	L	VQ	RESULTS	UNITS	L	VQ	RESULTS	UNITS	L	VQ
Volatile Organics												
1,1,1-Trichloroethane	0.010	mg/L	C	U	0.010	mg/L	C	U	0.010	mg/L	C	U
1,1,2,2-Tetrachloroethane	0.010	mg/L	C	U	0.010	mg/L	C	U	0.010	mg/L	C	U
1,1,2-Trichloroethane	0.010	mg/L	C	U	0.010	mg/L	C	U	0.010	mg/L	C	U
1,1-Dichloroethane	0.010	mg/L	C	U	0.010	mg/L	C	U	0.010	mg/L	C	U
1,1-Dichloroethene	0.010	mg/L	C	U	0.010	mg/L	C	U	0.010	mg/L	C	U
1,2-Dichloroethane	0.010	mg/L	C	U	0.010	mg/L	C	U	0.010	mg/L	C	U
1,2-Dichloroethene	0.010	mg/L	C	U	0.010	mg/L	C	U	0.010	mg/L	C	U
1,2-Dichloropropane	0.010	mg/L	C	U	0.010	mg/L	C	U	0.010	mg/L	C	U
2-Butanone	0.010	mg/L	C	U	0.010	mg/L	C	U	0.010	mg/L	C	U
2-Hexanone	0.010	mg/L	C	U	0.010	mg/L	C	U	0.010	mg/L	C	U
4-Methyl-2-pentanone	0.010	mg/L	C	U	0.010	mg/L	C	U	0.010	mg/L	C	U
Acetone	0.034	mg/L	C	J	0.020	mg/L	C	U	0.017	mg/L	C	U
Benzene	0.010	mg/L	C	U	0.010	mg/L	C	U	0.010	mg/L	C	U
Bromodichloromethane	0.010	mg/L	C	U	0.010	mg/L	C	U	0.010	mg/L	C	U
Bromoform	0.010	mg/L	C	U	0.010	mg/L	C	U	0.010	mg/L	C	U
Bromomethane	0.010	mg/L	C	U	0.010	mg/L	C	U	0.010	mg/L	C	U
Carbon Tetrachloride	0.010	mg/L	C	U	0.010	mg/L	C	U	0.010	mg/L	C	U
Carbon disulfide	0.010	mg/L	C	U	0.010	mg/L	C	U	0.010	mg/L	C	U
Chlorobenzene	0.010	mg/L	C	U	0.010	mg/L	C	U	0.010	mg/L	C	U
Chloroethane	0.001	mg/L	C	J	0.009	mg/L	C	J	0.008	mg/L	C	J
Chloroform	0.010	mg/L	C	U	0.010	mg/L	C	U	0.010	mg/L	C	U
Chloromethane	0.010	mg/L	C	UJ	0.010	mg/L	C	U	0.010	mg/L	C	U
Dibromochloromethane	0.010	mg/L	C	U	0.010	mg/L	C	U	0.010	mg/L	C	U
Ethylbenzene	0.010	mg/L	C	U	0.010	mg/L	C	U	0.010	mg/L	C	U
Methylene chloride	0.010	mg/L	C	UJ	0.010	mg/L	C	U	0.010	mg/L	C	U
Styrene	0.010	mg/L	C	U	0.010	mg/L	C	U	0.010	mg/L	C	U
Tetrachloroethene	0.010	mg/L	C	U	0.010	mg/L	C	U	0.010	mg/L	C	U
Toluene	0.010	mg/L	C	U	0.010	mg/L	C	U	0.010	mg/L	C	U
Trichloroethene	0.010	mg/L	C	U	0.010	mg/L	C	U	0.010	mg/L	C	U
Vinyl Acetate	0.010	mg/L	C	UJ	0.010	mg/L	C	U	0.010	mg/L	C	U
Vinyl chloride	0.010	mg/L	C	U	0.010	mg/L	C	UJ	0.010	mg/L	C	UJ
Xylenes, Total	0.010	mg/L	C	U	0.010	mg/L	C	U	0.010	mg/L	C	U
cis-1,3-Dichloropropene	0.010	mg/L	C	U	0.010	mg/L	C	U	0.010	mg/L	C	U
trans-1,3-Dichloropropene	0.010	mg/L	C	U	0.010	mg/L	C	U	0.010	mg/L	C	U

0920

5174

TABLE F-13
(Continued)

PHASE II - CHEMICAL PARAMETERS

QC TYPE	TRIP BLANK				TRIP BLANK				TRIP BLANK			
SAMPLE NUMBER	110423				110426				110431			
ASSOCIATED SAMPLES	110422				110425				110430, 110428			
SAMPLING DATE	03/24/93				03/24/93				03/25/93			
CHEMICAL PARAMETERS	RESULTS	UNITS	L	VQ	RESULTS	UNITS	L	VQ	RESULTS	UNITS	L	VQ
Volatile Organics												
1,1,1-Trichloroethane	0.010	mg/L	C	U	0.010	mg/L	C	U	0.010	mg/L	C	U
1,1,2,2-Tetrachloroethane	0.010	mg/L	C	U	0.010	mg/L	C	U	0.010	mg/L	C	U
1,1,2-Trichloroethane	0.010	mg/L	C	U	0.010	mg/L	C	U	0.010	mg/L	C	U
1,1-Dichloroethane	0.010	mg/L	C	U	0.010	mg/L	C	U	0.010	mg/L	C	U
1,1-Dichloroethene	0.010	mg/L	C	U	0.010	mg/L	C	U	0.010	mg/L	C	U
1,2-Dichloroethane	0.010	mg/L	C	U	0.010	mg/L	C	U	0.010	mg/L	C	U
1,2-Dichloroethene	0.010	mg/L	C	U	0.010	mg/L	C	U	0.010	mg/L	C	U
1,2-Dichloropropane	0.010	mg/L	C	U	0.010	mg/L	C	U	0.010	mg/L	C	U
2-Butanone	0.010	mg/L	C	U	0.010	mg/L	C	U	0.010	mg/L	C	U
2-Hexanone	0.010	mg/L	C	U	0.010	mg/L	C	U	0.010	mg/L	C	U
4-Methyl-2-pentanone	0.010	mg/L	C	U	0.010	mg/L	C	U	0.010	mg/L	C	U
Acetone	0.021	mg/L	C	U	0.020	mg/L	C	U	0.010	mg/L	C	U
Benzene	0.010	mg/L	C	U	0.010	mg/L	C	U	0.010	mg/L	C	U
Bromodichloromethane	0.010	mg/L	C	U	0.010	mg/L	C	U	0.010	mg/L	C	U
Bromoform	0.010	mg/L	C	U	0.010	mg/L	C	U	0.010	mg/L	C	U
Bromomethane	0.010	mg/L	C	U	0.010	mg/L	C	U	0.010	mg/L	C	U
Carbon Tetrachloride	0.010	mg/L	C	U	0.010	mg/L	C	U	0.010	mg/L	C	U
Carbon disulfide	0.010	mg/L	C	U	0.010	mg/L	C	U	0.010	mg/L	C	U
Chlorobenzene	0.010	mg/L	C	U	0.010	mg/L	C	U	0.010	mg/L	C	U
Chloroethane	0.010	mg/L	C	U	0.011	mg/L	C	-	0.008	mg/L	C	J
Chloroform	0.010	mg/L	C	U	0.010	mg/L	C	U	0.010	mg/L	C	U
Chloromethane	0.010	mg/L	C	U	0.010	mg/L	C	U	0.010	mg/L	C	U
Dibromochloromethane	0.010	mg/L	C	U	0.010	mg/L	C	U	0.010	mg/L	C	U
Ethylbenzene	0.010	mg/L	C	U	0.010	mg/L	C	U	0.010	mg/L	C	U
Methylene chloride	0.010	mg/L	C	U	0.010	mg/L	C	U	0.010	mg/L	C	U
Styrene	0.010	mg/L	C	U	0.010	mg/L	C	U	0.010	mg/L	C	U
Tetrachloroethene	0.010	mg/L	C	U	0.010	mg/L	C	U	0.010	mg/L	C	U
Toluene	0.010	mg/L	C	U	0.010	mg/L	C	U	0.010	mg/L	C	U
Trichloroethene	0.010	mg/L	C	U	0.010	mg/L	C	U	0.010	mg/L	C	U
Vinyl Acetate	0.010	mg/L	C	U	0.010	mg/L	C	U	0.010	mg/L	C	U
Vinyl chloride	0.010	mg/L	C	U	0.010	mg/L	C	UJ	0.010	mg/L	C	U
Xylenes, Total	0.010	mg/L	C	U	0.010	mg/L	C	U	0.010	mg/L	C	U
cis-1,3-Dichloropropene	0.010	mg/L	C	U	0.010	mg/L	C	U	0.010	mg/L	C	U
trans-1,3-Dichloropropene	0.010	mg/L	C	U	0.010	mg/L	C	U	0.010	mg/L	C	U

TABLE F-13
(Continued)

PHASE II - CHEMICAL PARAMETERS

QC TYPE	TRIP BLANK	TRIP BLANK	TRIP BLANK
SAMPLE NUMBER	110433	110561	110563
ASSOCIATED SAMPLES	110432	110547, 110556	110571
SAMPLING DATE	03/25/93	04/02/93	04/06/93

CHEMICAL PARAMETERS	RESULTS	UNITS	L	VQ	RESULTS	UNITS	L	VQ	RESULTS	UNITS	L	VQ
Volatile Organics												
1,1,1-Trichloroethane	0.010	mg/L	C	U	0.010	mg/L	C	U	0.010	mg/L	C	U
1,1,2,2-Tetrachloroethane	0.010	mg/L	C	U	0.010	mg/L	C	U	0.010	mg/L	C	U
1,1,2-Trichloroethane	0.010	mg/L	C	U	0.010	mg/L	C	U	0.010	mg/L	C	U
1,1-Dichloroethane	0.010	mg/L	C	U	0.010	mg/L	C	U	0.010	mg/L	C	U
1,1-Dichloroethene	0.010	mg/L	C	U	0.010	mg/L	C	U	0.010	mg/L	C	U
1,2-Dichloroethane	0.010	mg/L	C	U	0.010	mg/L	C	U	0.010	mg/L	C	U
1,2-Dichloroethene	0.010	mg/L	C	U	0.010	mg/L	C	U	0.010	mg/L	C	U
1,2-Dichloropropane	0.010	mg/L	C	U	0.010	mg/L	C	U	0.010	mg/L	C	U
2-Butanone	0.010	mg/L	C	U	0.010	mg/L	C	U	0.010	mg/L	C	U
2-Hexanone	0.010	mg/L	C	U	0.010	mg/L	C	U	0.010	mg/L	C	U
4-Methyl-2-pentanone	0.010	mg/L	C	U	0.010	mg/L	C	U	0.010	mg/L	C	U
Acetone	0.010	mg/L	C	U	0.010	mg/L	C	U	0.010	mg/L	C	U
Benzene	0.010	mg/L	C	U	0.010	mg/L	C	U	0.010	mg/L	C	U
Bromodichloromethane	0.010	mg/L	C	U	0.010	mg/L	C	U	0.010	mg/L	C	U
Bromoform	0.010	mg/L	C	U	0.010	mg/L	C	U	0.010	mg/L	C	U
Bromomethane	0.010	mg/L	C	U	0.010	mg/L	C	UJ	0.010	mg/L	C	U
Carbon Tetrachloride	0.010	mg/L	C	U	0.010	mg/L	C	U	0.010	mg/L	C	UJ
Carbon disulfide	0.010	mg/L	C	U	0.010	mg/L	C	U	0.010	mg/L	C	U
Chlorobenzene	0.010	mg/L	C	U	0.010	mg/L	C	U	0.010	mg/L	C	U
Chloroethane	0.008	mg/L	C	U	0.004	mg/L	C	J	0.003	mg/L	C	J
Chloroform	0.010	mg/L	C	U	0.010	mg/L	C	U	0.010	mg/L	C	U
Chloromethane	0.010	mg/L	C	U	0.010	mg/L	C	U	0.010	mg/L	C	U
Dibromochloromethane	0.010	mg/L	C	U	0.010	mg/L	C	U	0.010	mg/L	C	U
Ethylbenzene	0.010	mg/L	C	U	0.010	mg/L	C	U	0.010	mg/L	C	U
Methylene chloride	0.010	mg/L	C	U	0.010	mg/L	C	U	0.010	mg/L	C	U
Styrene	0.010	mg/L	C	U	0.010	mg/L	C	U	0.010	mg/L	C	U
Tetrachloroethene	0.010	mg/L	C	U	0.010	mg/L	C	U	0.010	mg/L	C	U
Toluene	0.010	mg/L	C	U	0.010	mg/L	C	U	0.010	mg/L	C	U
Trichloroethene	0.010	mg/L	C	U	0.010	mg/L	C	U	0.010	mg/L	C	U
Vinyl Acetate	0.010	mg/L	C	U	0.010	mg/L	C	U	0.010	mg/L	C	U
Vinyl chloride	0.010	mg/L	C	U	0.010	mg/L	C	U	0.010	mg/L	C	U
Xylenes, Total	0.010	mg/L	C	U	0.010	mg/L	C	U	0.010	mg/L	C	U
cis-1,3-Dichloropropene	0.010	mg/L	C	U	0.010	mg/L	C	U	0.010	mg/L	C	U
trans-1,3-Dichloropropene	0.010	mg/L	C	U	0.010	mg/L	C	U	0.010	mg/L	C	U

0922

5174

TABLE F-13
(Continued)

PHASE II - CHEMICAL PARAMETERS

QC TYPE	TRIP BLANK				TRIP BLANK				TRIP BLANK			
SAMPLE NUMBER	110581				110582				112011			
ASSOCIATED SAMPLES	110579				110584, 112494				112008, 113291			
SAMPLING DATE	04/07/93				04/08/93				05/03/93			
CHEMICAL PARAMETERS	RESULTS	UNITS	L	VQ	RESULTS	UNITS	L	VQ	RESULTS	UNITS	L	VQ
Volatile Organics												
1,1,1-Trichloroethane	0.010	mg/L	C	U	0.010	mg/L	C	U	0.010	mg/L	C	U
1,1,2,2-Tetrachloroethane	0.010	mg/L	C	U	0.010	mg/L	C	U	0.010	mg/L	C	U
1,1,2-Trichloroethane	0.010	mg/L	C	U	0.010	mg/L	C	U	0.010	mg/L	C	U
1,1-Dichloroethane	0.010	mg/L	C	U	0.010	mg/L	C	U	0.010	mg/L	C	U
1,1-Dichloroethene	0.010	mg/L	C	U	0.010	mg/L	C	U	0.010	mg/L	C	U
1,2-Dichloroethane	0.010	mg/L	C	U	0.010	mg/L	C	U	0.010	mg/L	C	U
1,2-Dichloroethene	0.010	mg/L	C	U	0.010	mg/L	C	U	0.010	mg/L	C	U
1,2-Dichloropropane	0.010	mg/L	C	U	0.010	mg/L	C	U	0.010	mg/L	C	U
2-Butanone	0.010	mg/L	C	U	0.010	mg/L	C	U	0.010	mg/L	C	U
2-Hexanone	0.010	mg/L	C	U	0.010	mg/L	C	U	0.010	mg/L	C	U
4-Methyl-2-pentanone	0.010	mg/L	C	U	0.010	mg/L	C	U	0.010	mg/L	C	U
Acetone	0.014	mg/L	C	-	0.008	mg/L	C	J	0.006	mg/L	C	J
Benzene	0.010	mg/L	C	U	0.010	mg/L	C	U	0.010	mg/L	C	U
Bromodichloromethane	0.010	mg/L	C	U	0.010	mg/L	C	U	0.010	mg/L	C	U
Bromoform	0.010	mg/L	C	U	0.010	mg/L	C	U	0.010	mg/L	C	U
Bromomethane	0.010	mg/L	C	U	0.010	mg/L	C	U	0.010	mg/L	C	U
Carbon Tetrachloride	0.010	mg/L	C	UJ	0.010	mg/L	C	UJ	0.010	mg/L	C	U
Carbon disulfide	0.010	mg/L	C	U	0.010	mg/L	C	U	0.010	mg/L	C	UJ
Chlorobenzene	0.010	mg/L	C	U	0.010	mg/L	C	U	0.010	mg/L	C	U
Chloroethane	0.005	mg/L	C	J	0.005	mg/L	C	J	0.010	mg/L	C	UJ
Chloroform	0.010	mg/L	C	U	0.010	mg/L	C	U	0.010	mg/L	C	U
Chloromethane	0.010	mg/L	C	U	0.010	mg/L	C	U	0.010	mg/L	C	UJ
Dibromochloromethane	0.010	mg/L	C	U	0.010	mg/L	C	U	0.010	mg/L	C	U
Ethylbenzene	0.010	mg/L	C	U	0.010	mg/L	C	U	0.010	mg/L	C	U
Methylene chloride	0.010	mg/L	C	U	0.010	mg/L	C	U	0.010	mg/L	C	UJ
Styrene	0.010	mg/L	C	U	0.010	mg/L	C	U	0.010	mg/L	C	U
Tetrachloroethene	0.010	mg/L	C	U	0.010	mg/L	C	U	0.010	mg/L	C	U
Toluene	0.010	mg/L	C	U	0.010	mg/L	C	U	0.010	mg/L	C	U
Trichloroethene	0.010	mg/L	C	U	0.010	mg/L	C	U	0.010	mg/L	C	U
Vinyl Acetate	0.010	mg/L	C	U	0.010	mg/L	C	U	0.010	mg/L	C	U
Vinyl chloride	0.010	mg/L	C	U	0.010	mg/L	C	U	0.010	mg/L	C	U
Xylenes, Total	0.010	mg/L	C	U	0.010	mg/L	C	U	0.010	mg/L	C	U
cis-1,3-Dichloropropene	0.010	mg/L	C	U	0.010	mg/L	C	U	0.010	mg/L	C	U
trans-1,3-Dichloropropene	0.010	mg/L	C	U	0.010	mg/L	C	U	0.010	mg/L	C	U

TABLE F-13
(Continued)

PHASE II - CHEMICAL PARAMETERS

QC TYPE	TRIP BLANK				TRIP BLANK				TRIP BLANK			
SAMPLE NUMBER	112499				112517				112529			
ASSOCIATED SAMPLES	112507, 112514				112520, 112526				112536, 112593			
SAMPLING DATE	04/12/93				04/13/93				04/15/93			
CHEMICAL PARAMETERS	RESULTS	UNITS	L	VQ	RESULTS	UNITS	L	VQ	RESULTS	UNITS	L	VQ
Volatile Organics												
1,1,1-Trichloroethane	0.010	mg/L	C	U	0.010	mg/L	C	U	0.010	mg/L	C	U
1,1,2,2-Tetrachloroethane	0.010	mg/L	C	U	0.010	mg/L	C	U	0.010	mg/L	C	U
1,1,2-Trichloroethane	0.010	mg/L	C	U	0.010	mg/L	C	U	0.010	mg/L	C	U
1,1-Dichloroethane	0.010	mg/L	C	U	0.010	mg/L	C	U	0.010	mg/L	C	U
1,1-Dichloroethene	0.010	mg/L	C	U	0.010	mg/L	C	U	0.010	mg/L	C	U
1,2-Dichloroethane	0.010	mg/L	C	U	0.010	mg/L	C	U	0.010	mg/L	C	U
1,2-Dichloroethene	0.010	mg/L	C	U	0.010	mg/L	C	U	0.010	mg/L	C	U
1,2-Dichloropropane	0.010	mg/L	C	U	0.010	mg/L	C	U	0.010	mg/L	C	U
2-Butanone	0.010	mg/L	C	U	0.010	mg/L	C	U	0.010	mg/L	C	U
2-Hexanone	0.010	mg/L	C	UJ	0.010	mg/L	C	UJ	0.010	mg/L	C	UJ
4-Methyl-2-pentanone	0.010	mg/L	C	U	0.010	mg/L	C	U	0.010	mg/L	C	U
Acetone	0.053	mg/L	C	U	0.037	mg/L	C	U	0.054	mg/L	C	U
Benzene	0.010	mg/L	C	U	0.010	mg/L	C	U	0.010	mg/L	C	U
Bromodichloromethane	0.010	mg/L	C	U	0.010	mg/L	C	U	0.010	mg/L	C	U
Bromoform	0.010	mg/L	C	U	0.010	mg/L	C	U	0.010	mg/L	C	U
Bromomethane	0.010	mg/L	C	U	0.010	mg/L	C	U	0.010	mg/L	C	U
Carbon Tetrachloride	0.010	mg/L	C	U	0.010	mg/L	C	U	0.010	mg/L	C	U
Carbon disulfide	0.010	mg/L	C	U	0.010	mg/L	C	U	0.010	mg/L	C	U
Chlorobenzene	0.010	mg/L	C	U	0.010	mg/L	C	U	0.010	mg/L	C	U
Chloroethane	0.004	mg/L	C	J	0.005	mg/L	C	J	0.004	mg/L	C	J
Chloroform	0.010	mg/L	C	U	0.010	mg/L	C	U	0.010	mg/L	C	U
Chloromethane	0.010	mg/L	C	U	0.010	mg/L	C	U	0.010	mg/L	C	U
Dibromochloromethane	0.010	mg/L	C	U	0.010	mg/L	C	U	0.010	mg/L	C	U
Ethylbenzene	0.010	mg/L	C	U	0.010	mg/L	C	U	0.010	mg/L	C	U
Methylene chloride	0.010	mg/L	C	UJ	0.010	mg/L	C	UJ	0.010	mg/L	C	UJ
Styrene	0.010	mg/L	C	U	0.010	mg/L	C	U	0.010	mg/L	C	U
Tetrachloroethene	0.010	mg/L	C	U	0.010	mg/L	C	U	0.010	mg/L	C	U
Toluene	0.010	mg/L	C	U	0.010	mg/L	C	U	0.010	mg/L	C	U
Trichloroethene	0.010	mg/L	C	U	0.010	mg/L	C	U	0.010	mg/L	C	U
Vinyl Acetate	0.010	mg/L	C	U	0.010	mg/L	C	U	0.010	mg/L	C	U
Vinyl chloride	0.010	mg/L	C	U	0.010	mg/L	C	U	0.010	mg/L	C	U
Xylenes, Total	0.010	mg/L	C	U	0.010	mg/L	C	U	0.010	mg/L	C	U
cis-1,3-Dichloropropene	0.010	mg/L	C	U	0.010	mg/L	C	U	0.010	mg/L	C	U
trans-1,3-Dichloropropene	0.010	mg/L	C	U	0.010	mg/L	C	U	0.010	mg/L	C	U

0924

5174

TABLE F-13
(Continued)

PHASE II - CHEMICAL PARAMETERS

QC TYPE	TRIP BLANK	TRIP BLANK	TRIP BLANK
SAMPLE NUMBER	112552	112567	112637
ASSOCIATED SAMPLES	112545, 112550	112584, 112588	112696
SAMPLING DATE	04/13/93	04/16/93	04/18/93

CHEMICAL PARAMETERS	RESULTS	UNITS	L	VQ	RESULTS	UNITS	L	VQ	RESULTS	UNITS	L	VQ
Volatile Organics												
1,1,1-Trichloroethane	0.010	mg/L	C	U	0.010	mg/L	C	U	0.010	mg/L	C	U
1,1,2,2-Tetrachloroethane	0.010	mg/L	C	U	0.010	mg/L	C	U	0.010	mg/L	C	U
1,1,2-Trichloroethane	0.010	mg/L	C	U	0.010	mg/L	C	U	0.010	mg/L	C	U
1,1-Dichloroethane	0.010	mg/L	C	U	0.010	mg/L	C	U	0.010	mg/L	C	U
1,1-Dichloroethene	0.010	mg/L	C	U	0.010	mg/L	C	U	0.010	mg/L	C	U
1,2-Dichloroethane	0.010	mg/L	C	U	0.010	mg/L	C	U	0.010	mg/L	C	U
1,2-Dichloroethene	0.010	mg/L	C	U	0.010	mg/L	C	U	0.010	mg/L	C	U
1,2-Dichloropropane	0.010	mg/L	C	U	0.010	mg/L	C	U	0.010	mg/L	C	U
2-Butanone	0.010	mg/L	C	U	0.010	mg/L	C	U	0.010	mg/L	C	U
2-Hexanone	0.010	mg/L	C	UJ	0.010	mg/L	C	UJ	0.010	mg/L	C	U
4-Methyl-2-pentanone	0.010	mg/L	C	U	0.010	mg/L	C	U	0.010	mg/L	C	U
Acetone	0.051	mg/L	C	U	0.010	mg/L	C	U	0.045	mg/L	C	U
Benzene	0.010	mg/L	C	U	0.010	mg/L	C	U	0.010	mg/L	C	U
Bromodichloromethane	0.010	mg/L	C	U	0.010	mg/L	C	U	0.010	mg/L	C	U
Bromoform	0.010	mg/L	C	U	0.010	mg/L	C	U	0.010	mg/L	C	U
Bromomethane	0.010	mg/L	C	U	0.010	mg/L	C	U	0.010	mg/L	C	U
Carbon Tetrachloride	0.010	mg/L	C	U	0.010	mg/L	C	U	0.010	mg/L	C	U
Carbon disulfide	0.010	mg/L	C	U	0.010	mg/L	C	U	0.010	mg/L	C	U
Chlorobenzene	0.010	mg/L	C	U	0.010	mg/L	C	U	0.010	mg/L	C	U
Chloroethane	0.004	mg/L	C	J	0.002	mg/L	C	J	0.004	mg/L	C	J
Chloroform	0.010	mg/L	C	U	0.010	mg/L	C	U	0.010	mg/L	C	U
Chloromethane	0.010	mg/L	C	U	0.010	mg/L	C	U	0.010	mg/L	C	U
Dibromochloromethane	0.010	mg/L	C	U	0.010	mg/L	C	U	0.010	mg/L	C	U
Ethylbenzene	0.010	mg/L	C	U	0.010	mg/L	C	U	0.010	mg/L	C	U
Methylene chloride	0.010	mg/L	C	UJ	0.010	mg/L	C	UJ	0.026	mg/L	C	UJ
Styrene	0.010	mg/L	C	U	0.010	mg/L	C	U	0.010	mg/L	C	U
Tetrachloroethene	0.010	mg/L	C	U	0.010	mg/L	C	U	0.010	mg/L	C	U
Toluene	0.010	mg/L	C	U	0.010	mg/L	C	U	0.010	mg/L	C	U
Trichloroethene	0.010	mg/L	C	U	0.010	mg/L	C	U	0.010	mg/L	C	U
Vinyl Acetate	0.010	mg/L	C	U	0.010	mg/L	C	U	0.010	mg/L	C	U
Vinyl chloride	0.010	mg/L	C	U	0.010	mg/L	C	U	0.010	mg/L	C	U
Xylenes, Total	0.010	mg/L	C	U	0.010	mg/L	C	U	0.010	mg/L	C	U
cis-1,3-Dichloropropene	0.010	mg/L	C	U	0.010	mg/L	C	U	0.010	mg/L	C	U
trans-1,3-Dichloropropene	0.010	mg/L	C	U	0.010	mg/L	C	U	0.010	mg/L	C	U

TABLE F-13
(Continued)

PHASE II - CHEMICAL PARAMETERS

QC TYPE	TRIP BLANK				TRIP BLANK				TRIP BLANK			
SAMPLE NUMBER	112642				112687				112733			
ASSOCIATED SAMPLES	112648, 112685				112690, 112893				112731			
SAMPLING DATE	04/17/93				04/18/93				04/19/93			
CHEMICAL PARAMETERS	RESULTS	UNITS	L	VQ	RESULTS	UNITS	L	VQ	RESULTS	UNITS	L	VQ
Volatile Organics												
1,1,1-Trichloroethane	0.010	mg/L	C	U	0.010	mg/L	C	U	0.010	mg/L	C	U
1,1,2,2-Tetrachloroethane	0.010	mg/L	C	U	0.010	mg/L	C	U	0.010	mg/L	C	U
1,1,2-Trichloroethane	0.010	mg/L	C	U	0.010	mg/L	C	U	0.010	mg/L	C	U
1,1-Dichloroethane	0.010	mg/L	C	U	0.010	mg/L	C	U	0.010	mg/L	C	U
1,1-Dichloroethene	0.010	mg/L	C	U	0.010	mg/L	C	U	0.010	mg/L	C	U
1,2-Dichloroethane	0.010	mg/L	C	U	0.010	mg/L	C	U	0.010	mg/L	C	U
1,2-Dichloroethene	0.010	mg/L	C	U	0.010	mg/L	C	U	0.010	mg/L	C	U
1,2-Dichloropropane	0.010	mg/L	C	U	0.010	mg/L	C	U	0.010	mg/L	C	U
2-Butanone	0.010	mg/L	C	U	0.010	mg/L	C	U	0.010	mg/L	C	U
2-Hexanone	0.010	mg/L	C	U	0.010	mg/L	C	U	0.010	mg/L	C	UJ
4-Methyl-2-pentanone	0.010	mg/L	C	U	0.010	mg/L	C	U	0.010	mg/L	C	UJ
Acetone	0.086	mg/L	C	U	0.018	mg/L	C	U	0.045	mg/L	C	-
Benzene	0.010	mg/L	C	U	0.010	mg/L	C	U	0.010	mg/L	C	U
Bromodichloromethane	0.010	mg/L	C	U	0.010	mg/L	C	U	0.010	mg/L	C	U
Bromoform	0.010	mg/L	C	U	0.010	mg/L	C	U	0.010	mg/L	C	U
Bromomethane	0.010	mg/L	C	U	0.010	mg/L	C	U	0.010	mg/L	C	U
Carbon Tetrachloride	0.010	mg/L	C	U	0.010	mg/L	C	U	0.010	mg/L	C	U
Carbon disulfide	0.002	mg/L	C	J	0.009	mg/L	C	J	0.010	mg/L	C	U
Chlorobenzene	0.010	mg/L	C	U	0.010	mg/L	C	U	0.010	mg/L	C	U
Chloroethane	0.005	mg/L	C	J	0.005	mg/L	C	J	0.004	mg/L	C	J
Chloroform	0.010	mg/L	C	U	0.010	mg/L	C	U	0.010	mg/L	C	U
Chloromethane	0.010	mg/L	C	U	0.010	mg/L	C	U	0.010	mg/L	C	UJ
Dibromochloromethane	0.010	mg/L	C	U	0.010	mg/L	C	U	0.010	mg/L	C	U
Ethylbenzene	0.010	mg/L	C	U	0.010	mg/L	C	U	0.010	mg/L	C	U
Methylene chloride	0.026	mg/L	C	UJ	0.037	mg/L	C	UJ	0.010	mg/L	C	UJ
Styrene	0.010	mg/L	C	U	0.010	mg/L	C	U	0.010	mg/L	C	U
Tetrachloroethene	0.010	mg/L	C	U	0.010	mg/L	C	U	0.010	mg/L	C	U
Toluene	0.010	mg/L	C	U	0.010	mg/L	C	U	0.010	mg/L	C	U
Trichloroethene	0.010	mg/L	C	U	0.010	mg/L	C	U	0.010	mg/L	C	U
Vinyl Acetate	0.010	mg/L	C	U	0.010	mg/L	C	U	0.010	mg/L	C	U
Vinyl chloride	0.010	mg/L	C	U	0.010	mg/L	C	U	0.010	mg/L	C	U
Xylenes, Total	0.010	mg/L	C	U	0.010	mg/L	C	U	0.010	mg/L	C	U
cis-1,3-Dichloropropene	0.010	mg/L	C	U	0.010	mg/L	C	U	0.010	mg/L	C	U
trans-1,3-Dichloropropene	0.010	mg/L	C	U	0.010	mg/L	C	U	0.010	mg/L	C	U

0926

5174

TABLE F-13
(Continued)

PHASE II - CHEMICAL PARAMETERS

QC TYPE	TRIP BLANK			TRIP BLANK			TRIP BLANK		
SAMPLE NUMBER	112734			112757			112853		
ASSOCIATED SAMPLES	112737			112763			112835, 112849		
SAMPLING DATE	04/20/93			04/21/93			04/20/93		
CHEMICAL PARAMETERS	RESULTS	UNITS	L VQ	RESULTS	UNITS	L VQ	RESULTS	UNITS	L VQ
Volatile Organics									
1,1,1-Trichloroethane	0.010	mg/L	C U	0.010	mg/L	C U	0.010	mg/L	C U
1,1,2,2-Tetrachloroethane	0.010	mg/L	C U	0.010	mg/L	C U	0.010	mg/L	C U
1,1,2-Trichloroethane	0.010	mg/L	C U	0.010	mg/L	C U	0.010	mg/L	C U
1,1-Dichloroethane	0.010	mg/L	C U	0.010	mg/L	C U	0.010	mg/L	C U
1,1-Dichloroethene	0.010	mg/L	C U	0.010	mg/L	C U	0.010	mg/L	C U
1,2-Dichloroethane	0.010	mg/L	C U	0.010	mg/L	C U	0.010	mg/L	C U
1,2-Dichloroethene	0.010	mg/L	C U	0.010	mg/L	C U	0.010	mg/L	C U
1,2-Dichloropropane	0.010	mg/L	C U	0.010	mg/L	C U	0.010	mg/L	C U
2-Butanone	0.010	mg/L	C U	0.010	mg/L	C U	0.010	mg/L	C U
2-Hexanone	0.010	mg/L	C UJ	0.010	mg/L	C UJ	0.010	mg/L	C UJ
4-Methyl-2-pentanone	0.010	mg/L	C UJ	0.010	mg/L	C UJ	0.010	mg/L	C UJ
Acetone	0.035	mg/L	C -	0.038	mg/L	C -	0.044	mg/L	C -
Benzene	0.010	mg/L	C U	0.010	mg/L	C U	0.010	mg/L	C U
Bromodichloromethane	0.010	mg/L	C U	0.010	mg/L	C U	0.010	mg/L	C U
Bromoform	0.010	mg/L	C U	0.010	mg/L	C U	0.010	mg/L	C U
Bromomethane	0.010	mg/L	C U	0.010	mg/L	C U	0.010	mg/L	C U
Carbon Tetrachloride	0.010	mg/L	C U	0.010	mg/L	C U	0.010	mg/L	C U
Carbon disulfide	0.010	mg/L	C U	0.010	mg/L	C U	0.010	mg/L	C U
Chlorobenzene	0.010	mg/L	C U	0.010	mg/L	C U	0.010	mg/L	C U
Chloroethane	0.003	mg/L	C J	0.003	mg/L	C J	0.004	mg/L	C J
Chloroform	0.010	mg/L	C U	0.010	mg/L	C U	0.010	mg/L	C U
Chloromethane	0.010	mg/L	C UJ	0.010	mg/L	C U	0.010	mg/L	C UJ
Dibromochloromethane	0.010	mg/L	C U	0.010	mg/L	C U	0.010	mg/L	C U
Ethylbenzene	0.010	mg/L	C U	0.010	mg/L	C U	0.010	mg/L	C U
Methylene chloride	0.010	mg/L	C UJ	0.010	mg/L	C UJ	0.010	mg/L	C UJ
Styrene	0.010	mg/L	C U	0.010	mg/L	C U	0.010	mg/L	C U
Tetrachloroethene	0.010	mg/L	C U	0.010	mg/L	C U	0.010	mg/L	C U
Toluene	0.010	mg/L	C U	0.010	mg/L	C U	0.010	mg/L	C U
Trichloroethene	0.010	mg/L	C U	0.010	mg/L	C U	0.010	mg/L	C U
Vinyl Acetate	0.010	mg/L	C U	0.010	mg/L	C U	0.010	mg/L	C U
Vinyl chloride	0.010	mg/L	C U	0.010	mg/L	C U	0.010	mg/L	C U
Xylenes, Total	0.010	mg/L	C U	0.010	mg/L	C U	0.010	mg/L	C U
cis-1,3-Dichloropropene	0.010	mg/L	C U	0.010	mg/L	C U	0.010	mg/L	C U
trans-1,3-Dichloropropene	0.010	mg/L	C U	0.010	mg/L	C U	0.010	mg/L	C U

TABLE F-13
(Continued)

PHASE II - CHEMICAL PARAMETERS

QC TYPE	TRIP BLANK				TRIP BLANK				TRIP BLANK			
SAMPLE NUMBER	112877				112995				112998			
ASSOCIATED SAMPLES	112859				112994				112997			
SAMPLING DATE	04/21/93				04/28/93				04/30/93			
CHEMICAL PARAMETERS	RESULTS	UNITS	L	VQ	RESULTS	UNITS	L	VQ	RESULTS	UNITS	L	VQ
Volatile Organics												
1,1,1-Trichloroethane	0.010	mg/L	C	U	0.010	mg/L	C	U	0.010	mg/L	C	U
1,1,2,2-Tetrachloroethane	0.010	mg/L	C	U	0.010	mg/L	C	U	0.010	mg/L	C	U
1,1,2-Trichloroethane	0.010	mg/L	C	U	0.010	mg/L	C	U	0.010	mg/L	C	U
1,1-Dichloroethane	0.010	mg/L	C	U	0.010	mg/L	C	U	0.010	mg/L	C	U
1,1-Dichloroethene	0.010	mg/L	C	U	0.010	mg/L	C	U	0.010	mg/L	C	U
1,2-Dichloroethane	0.010	mg/L	C	U	0.010	mg/L	C	U	0.010	mg/L	C	U
1,2-Dichloroethene	0.010	mg/L	C	U	0.010	mg/L	C	U	0.010	mg/L	C	U
1,2-Dichloropropane	0.010	mg/L	C	U	0.010	mg/L	C	U	0.010	mg/L	C	U
2-Butanone	0.010	mg/L	C	U	0.010	mg/L	C	U	0.010	mg/L	C	U
2-Hexanone	0.010	mg/L	C	UJ	0.010	mg/L	C	UJ	0.010	mg/L	C	UJ
4-Methyl-2-pentanone	0.010	mg/L	C	UJ	0.010	mg/L	C	U	0.010	mg/L	C	U
Acetone	0.021	mg/L	C	-	0.005	mg/L	C	J	0.013	mg/L	C	-
Benzene	0.010	mg/L	C	U	0.010	mg/L	C	U	0.010	mg/L	C	U
Bromodichloromethane	0.010	mg/L	C	U	0.010	mg/L	C	U	0.010	mg/L	C	U
Bromoform	0.010	mg/L	C	U	0.010	mg/L	C	U	0.010	mg/L	C	U
Bromomethane	0.010	mg/L	C	U	0.010	mg/L	C	U	0.010	mg/L	C	U
Carbon Tetrachloride	0.010	mg/L	C	U	0.010	mg/L	C	U	0.010	mg/L	C	U
Carbon disulfide	0.010	mg/L	C	U	0.010	mg/L	C	U	0.010	mg/L	C	UJ
Chlorobenzene	0.010	mg/L	C	U	0.010	mg/L	C	U	0.010	mg/L	C	U
Chloroethane	0.010	mg/L	C	U	0.010	mg/L	C	U	0.010	mg/L	C	UJ
Chloroform	0.010	mg/L	C	U	0.010	mg/L	C	U	0.010	mg/L	C	U
Chloromethane	0.010	mg/L	C	U	0.010	mg/L	C	UJ	0.010	mg/L	C	UJ
Dibromochloromethane	0.010	mg/L	C	U	0.010	mg/L	C	U	0.010	mg/L	C	U
Ethylbenzene	0.010	mg/L	C	U	0.010	mg/L	C	U	0.010	mg/L	C	U
Methylene chloride	0.010	mg/L	C	UJ	0.010	mg/L	C	U	0.012	mg/L	C	UJ
Styrene	0.010	mg/L	C	U	0.010	mg/L	C	U	0.010	mg/L	C	U
Tetrachloroethene	0.010	mg/L	C	U	0.010	mg/L	C	U	0.010	mg/L	C	U
Toluene	0.010	mg/L	C	U	0.010	mg/L	C	U	0.010	mg/L	C	U
Trichloroethene	0.010	mg/L	C	U	0.010	mg/L	C	U	0.010	mg/L	C	U
Vinyl Acetate	0.010	mg/L	C	U	0.010	mg/L	C	U	0.010	mg/L	C	U
Vinyl chloride	0.010	mg/L	C	U	0.010	mg/L	C	UJ	0.010	mg/L	C	U
Xylenes, Total	0.010	mg/L	C	U	0.010	mg/L	C	U	0.010	mg/L	C	U
cis-1,3-Dichloropropene	0.010	mg/L	C	U	0.010	mg/L	C	U	0.010	mg/L	C	U
trans-1,3-Dichloropropene	0.010	mg/L	C	U	0.010	mg/L	C	U	0.010	mg/L	C	U

0928

5174

TABLE F-13
(Continued)

PHASE II - CHEMICAL PARAMETERS

QC TYPE	TRIP BLANK			TRIP BLANK			TRIP BLANK		
SAMPLE NUMBER	113002			113004			113294		
ASSOCIATED SAMPLES	113000			113003			112013, 112014, 113299		
SAMPLING DATE	05/01/93			05/05/93			05/04/93		
CHEMICAL PARAMETERS	RESULTS	UNITS	L VQ	RESULTS	UNITS	L VQ	RESULTS	UNITS	L VQ
Volatile Organics									
1,1,1-Trichloroethane	0.010	mg/L	C U	0.010	mg/L	C U	0.010	mg/L	C U
1,1,2,2-Tetrachloroethane	0.010	mg/L	C U	0.010	mg/L	C U	0.010	mg/L	C U
1,1,2-Trichloroethane	0.010	mg/L	C U	0.010	mg/L	C U	0.010	mg/L	C U
1,1-Dichloroethane	0.010	mg/L	C U	0.010	mg/L	C UJ	0.010	mg/L	C UJ
1,1-Dichloroethene	0.010	mg/L	C U	0.010	mg/L	C U	0.010	mg/L	C U
1,2-Dichloroethane	0.010	mg/L	C U	0.010	mg/L	C U	0.010	mg/L	C U
1,2-Dichloroethene	0.010	mg/L	C U	0.010	mg/L	C U	0.010	mg/L	C U
1,2-Dichloropropane	0.010	mg/L	C U	0.010	mg/L	C U	0.010	mg/L	C U
2-Butanone	0.010	mg/L	C U	0.010	mg/L	C UJ	0.010	mg/L	C UJ
2-Hexanone	0.010	mg/L	C UJ	0.010	mg/L	C U	0.010	mg/L	C U
4-Methyl-2-pentanone	0.010	mg/L	C U	0.010	mg/L	C U	0.010	mg/L	C U
Acetone	0.010	mg/L	C U	0.004	mg/L	C R	0.004	mg/L	C R
Benzene	0.010	mg/L	C U	0.010	mg/L	C U	0.010	mg/L	C U
Bromodichloromethane	0.010	mg/L	C U	0.010	mg/L	C U	0.010	mg/L	C U
Bromoform	0.010	mg/L	C U	0.010	mg/L	C U	0.010	mg/L	C U
Bromomethane	0.010	mg/L	C U	0.010	mg/L	C U	0.010	mg/L	C U
Carbon Tetrachloride	0.010	mg/L	C U	0.010	mg/L	C U	0.010	mg/L	C U
Carbon disulfide	0.010	mg/L	C UJ	0.010	mg/L	C UJ	0.010	mg/L	C UJ
Chlorobenzene	0.010	mg/L	C U	0.010	mg/L	C U	0.010	mg/L	C U
Chloroethane	0.010	mg/L	C UJ	0.010	mg/L	C UJ	0.010	mg/L	C UJ
Chloroform	0.010	mg/L	C U	0.010	mg/L	C U	0.010	mg/L	C U
Chloromethane	0.010	mg/L	C UJ	0.010	mg/L	C R	0.010	mg/L	C R
Dibromochloromethane	0.010	mg/L	C U	0.010	mg/L	C U	0.010	mg/L	C U
Ethylbenzene	0.010	mg/L	C U	0.010	mg/L	C U	0.010	mg/L	C U
Methylene chloride	0.010	mg/L	C UJ	0.010	mg/L	C UJ	0.010	mg/L	C UJ
Styrene	0.010	mg/L	C U	0.010	mg/L	C U	0.010	mg/L	C U
Tetrachloroethene	0.010	mg/L	C U	0.010	mg/L	C U	0.010	mg/L	C U
Toluene	0.010	mg/L	C U	0.010	mg/L	C U	0.010	mg/L	C U
Trichloroethene	0.010	mg/L	C U	0.010	mg/L	C U	0.010	mg/L	C U
Vinyl Acetate	0.010	mg/L	C U	0.010	mg/L	C UJ	0.010	mg/L	C UJ
Vinyl chloride	0.010	mg/L	C U	0.010	mg/L	C UJ	0.010	mg/L	C UJ
Xylenes, Total	0.010	mg/L	C U	0.010	mg/L	C U	0.010	mg/L	C U
cis-1,3-Dichloropropene	0.010	mg/L	C U	0.010	mg/L	C U	0.010	mg/L	C U
trans-1,3-Dichloropropene	0.010	mg/L	C U	0.010	mg/L	C U	0.010	mg/L	C U

TABLE F-13
(Continued)

PHASE II - CHEMICAL PARAMETERS

QC TYPE	TRIP BLANK				TRIP BLANK				TRIP BLANK			
SAMPLE NUMBER	113300				113320				113719			
ASSOCIATED SAMPLES	112013, 112014, 113294				113317				113718			
SAMPLING DATE	05/04/93				05/28/93				06/03/93			
CHEMICAL PARAMETERS	RESULTS	UNITS	L	VQ	RESULTS	UNITS	L	VQ	RESULTS	UNITS	L	VQ
Volatile Organics												
1,1,1-Trichloroethane	0.010	mg/L	C	U	0.010	mg/L	C	U	0.010	mg/L	C	R
1,1,2,2-Tetrachloroethane	0.010	mg/L	C	U	0.010	mg/L	C	U	0.010	mg/L	C	R
1,1,2-Trichloroethane	0.010	mg/L	C	U	0.010	mg/L	C	U	0.010	mg/L	C	R
1,1-Dichloroethane	0.010	mg/L	C	UJ	0.010	mg/L	C	U	0.010	mg/L	C	R
1,1-Dichloroethene	0.010	mg/L	C	U	0.010	mg/L	C	U	0.010	mg/L	C	R
1,2-Dichloroethane	0.010	mg/L	C	U	0.010	mg/L	C	U	0.010	mg/L	C	R
1,2-Dichloroethene	0.010	mg/L	C	U	0.010	mg/L	C	U	0.010	mg/L	C	R
1,2-Dichloropropane	0.010	mg/L	C	U	0.010	mg/L	C	U	0.010	mg/L	C	R
2-Butanone	0.010	mg/L	C	UJ	0.010	mg/L	C	U	0.010	mg/L	C	R
2-Hexanone	0.010	mg/L	C	U	0.010	mg/L	C	U	0.010	mg/L	C	R
4-Methyl-2-pentanone	0.010	mg/L	C	U	0.010	mg/L	C	U	0.010	mg/L	C	R
Acetone	0.005	mg/L	C	R	0.010	mg/L	C	UJ	0.010	mg/L	C	R
Benzene	0.010	mg/L	C	U	0.010	mg/L	C	U	0.010	mg/L	C	R
Bromodichloromethane	0.010	mg/L	C	U	0.010	mg/L	C	U	0.010	mg/L	C	R
Bromoform	0.010	mg/L	C	U	0.010	mg/L	C	U	0.010	mg/L	C	R
Bromomethane	0.010	mg/L	C	U	0.010	mg/L	C	U	0.010	mg/L	C	R
Carbon Tetrachloride	0.010	mg/L	C	U	0.010	mg/L	C	U	0.010	mg/L	C	R
Carbon disulfide	0.010	mg/L	C	UJ	0.010	mg/L	C	U	0.010	mg/L	C	R
Chlorobenzene	0.010	mg/L	C	U	0.010	mg/L	C	U	0.010	mg/L	C	R
Chloroethane	0.010	mg/L	C	UJ	0.010	mg/L	C	UJ	0.010	mg/L	C	R
Chloroform	0.010	mg/L	C	U	0.010	mg/L	C	U	0.010	mg/L	C	R
Chloromethane	0.010	mg/L	C	R	0.010	mg/L	C	UJ	0.010	mg/L	C	R
Dibromochloromethane	0.010	mg/L	C	U	0.010	mg/L	C	U	0.010	mg/L	C	R
Ethylbenzene	0.010	mg/L	C	U	0.010	mg/L	C	U	0.010	mg/L	C	R
Methylene chloride	0.010	mg/L	C	UJ	0.010	mg/L	C	UJ	0.010	mg/L	C	R
Styrene	0.010	mg/L	C	U	0.010	mg/L	C	U	0.010	mg/L	C	R
Tetrachloroethene	0.010	mg/L	C	U	0.010	mg/L	C	UJ	0.010	mg/L	C	R
Toluene	0.010	mg/L	C	U	0.010	mg/L	C	U	0.010	mg/L	C	R
Trichloroethene	0.010	mg/L	C	U	0.010	mg/L	C	U	0.010	mg/L	C	R
Vinyl Acetate	0.010	mg/L	C	UJ	0.010	mg/L	C	U	0.010	mg/L	C	R
Vinyl chloride	0.010	mg/L	C	UJ	0.010	mg/L	C	U	0.010	mg/L	C	R
Xylenes, Total	0.010	mg/L	C	U	0.010	mg/L	C	U	0.010	mg/L	C	R
cis-1,3-Dichloropropene	0.010	mg/L	C	U	0.010	mg/L	C	U	0.010	mg/L	C	R
trans-1,3-Dichloropropene	0.010	mg/L	C	U	0.010	mg/L	C	U	0.010	mg/L	C	R

0930

F 5174

TABLE F-13
(Continued)

PHASE II - CHEMICAL PARAMETERS

QC TYPE	TRIP BLANK				TRIP BLANK				TRIP BLANK			
SAMPLE NUMBER	113723				113793				113796			
ASSOCIATED SAMPLES	113722				113792				113795			
SAMPLING DATE	06/16/93				06/16/93				06/21/93			
CHEMICAL PARAMETERS	RESULTS	UNITS	L	VQ	RESULTS	UNITS	L	VQ	RESULTS	UNITS	L	VQ
Volatile Organics												
1,1,1-Trichloroethane	0.010	mg/L	C	U	0.010	mg/L	C	U	0.010	mg/L	C	U
1,1,2,2-Tetrachloroethane	0.010	mg/L	C	U	0.010	mg/L	C	U	0.010	mg/L	C	U
1,1,2-Trichloroethane	0.010	mg/L	C	U	0.010	mg/L	C	U	0.010	mg/L	C	U
1,1-Dichloroethane	0.010	mg/L	C	U	0.010	mg/L	C	U	0.010	mg/L	C	U
1,1-Dichloroethene	0.010	mg/L	C	U	0.010	mg/L	C	U	0.010	mg/L	C	U
1,2-Dichloroethane	0.010	mg/L	C	U	0.010	mg/L	C	U	0.010	mg/L	C	U
1,2-Dichloroethene	0.010	mg/L	C	U	0.010	mg/L	C	U	0.010	mg/L	C	U
1,2-Dichloropropane	0.010	mg/L	C	U	0.010	mg/L	C	U	0.010	mg/L	C	U
2-Butanone	0.010	mg/L	C	UJ	0.010	mg/L	C	UJ	0.010	mg/L	C	U
2-Hexanone	0.010	mg/L	C	R	0.010	mg/L	C	R	0.010	mg/L	C	U
4-Methyl-2-pentanone	0.010	mg/L	C	R	0.010	mg/L	C	R	0.010	mg/L	C	U
Acetone	0.010	mg/L	C	R	0.010	mg/L	C	R	0.006	mg/L	C	J
Benzene	0.010	mg/L	C	U	0.010	mg/L	C	U	0.010	mg/L	C	U
Bromodichloromethane	0.010	mg/L	C	U	0.010	mg/L	C	U	0.010	mg/L	C	U
Bromoform	0.010	mg/L	C	U	0.010	mg/L	C	U	0.010	mg/L	C	U
Bromomethane	0.010	mg/L	C	U	0.010	mg/L	C	U	0.010	mg/L	C	U
Carbon Tetrachloride	0.010	mg/L	C	U	0.010	mg/L	C	U	0.010	mg/L	C	U
Carbon disulfide	0.010	mg/L	C	R	0.010	mg/L	C	R	0.010	mg/L	C	U
Chlorobenzene	0.010	mg/L	C	U	0.010	mg/L	C	U	0.010	mg/L	C	U
Chloroethane	0.010	mg/L	C	UJ	0.010	mg/L	C	UJ	0.010	mg/L	C	U
Chloroform	0.010	mg/L	C	U	0.010	mg/L	C	U	0.010	mg/L	C	U
Chloromethane	0.010	mg/L	C	U	0.010	mg/L	C	U	0.010	mg/L	C	U
Dibromochloromethane	0.010	mg/L	C	U	0.010	mg/L	C	U	0.010	mg/L	C	U
Ethylbenzene	0.010	mg/L	C	U	0.010	mg/L	C	U	0.010	mg/L	C	U
Methylene chloride	0.010	mg/L	C	U	0.010	mg/L	C	UJ	0.020	mg/L	C	U
Styrene	0.010	mg/L	C	U	0.010	mg/L	C	U	0.010	mg/L	C	U
Tetrachloroethene	0.010	mg/L	C	U	0.010	mg/L	C	U	0.010	mg/L	C	U
Toluene	0.010	mg/L	C	U	0.010	mg/L	C	U	0.010	mg/L	C	U
Trichloroethene	0.010	mg/L	C	U	0.010	mg/L	C	U	0.010	mg/L	C	U
Vinyl chloride	0.010	mg/L	C	U	0.010	mg/L	C	U	0.010	mg/L	C	U
Xylenes, Total	0.010	mg/L	C	U	0.010	mg/L	C	U	0.010	mg/L	C	U
cis-1,3-Dichloropropene	0.010	mg/L	C	U	0.010	mg/L	C	U	0.010	mg/L	C	U
trans-1,3-Dichloropropene	0.010	mg/L	C	U	0.010	mg/L	C	U	0.010	mg/L	C	U

TABLE F-13
(Continued)

PHASE II - CHEMICAL PARAMETERS

QC TYPE	TRIP BLANK				TRIP BLANK				TRIP BLANK			
SAMPLE NUMBER	113867				116232				116236			
ASSOCIATED SAMPLES	113866				116229				116233			
SAMPLING DATE	06/30/93				05/11/93				05/11/93			
CHEMICAL PARAMETERS	RESULTS	UNITS	L	VQ	RESULTS	UNITS	L	VQ	RESULTS	UNITS	L	VQ
Volatile Organics												
1,1,1-Trichloroethane	0.010	mg/L	C	U	0.010	mg/L	C	U	0.010	mg/L	C	U
1,1,2,2-Tetrachloroethane	0.010	mg/L	C	U	0.010	mg/L	C	U	0.010	mg/L	C	U
1,1,2-Trichloroethane	0.010	mg/L	C	U	0.010	mg/L	C	U	0.010	mg/L	C	U
1,1-Dichloroethane	0.010	mg/L	C	U	0.010	mg/L	C	U	0.010	mg/L	C	U
1,1-Dichloroethene	0.010	mg/L	C	U	0.010	mg/L	C	U	0.010	mg/L	C	U
1,2-Dichloroethane	0.010	mg/L	C	U	0.010	mg/L	C	U	0.010	mg/L	C	U
1,2-Dichloroethene	0.010	mg/L	C	U	0.010	mg/L	C	U	0.010	mg/L	C	U
1,2-Dichloropropane	0.010	mg/L	C	U	0.010	mg/L	C	U	0.010	mg/L	C	U
2-Butanone	0.010	mg/L	C	U	0.010	mg/L	C	U	0.010	mg/L	C	U
2-Hexanone	0.010	mg/L	C	U	0.010	mg/L	C	U	0.010	mg/L	C	U
4-Methyl-2-pentanone	0.010	mg/L	C	U	0.010	mg/L	C	U	0.010	mg/L	C	U
Acetone	0.010	mg/L	C	U	0.010	mg/L	C	U	0.010	mg/L	C	U
Benzene	0.010	mg/L	C	U	0.010	mg/L	C	U	0.010	mg/L	C	U
Bromodichloromethane	0.010	mg/L	C	U	0.010	mg/L	C	U	0.010	mg/L	C	U
Bromoform	0.010	mg/L	C	U	0.010	mg/L	C	U	0.010	mg/L	C	U
Bromomethane	0.010	mg/L	C	U	0.010	mg/L	C	U	0.010	mg/L	C	U
Carbon Tetrachloride	0.010	mg/L	C	U	0.010	mg/L	C	U	0.010	mg/L	C	U
Carbon disulfide	0.010	mg/L	C	U	0.010	mg/L	C	U	0.010	mg/L	C	U
Chlorobenzene	0.010	mg/L	C	U	0.010	mg/L	C	U	0.010	mg/L	C	U
Chloroethane	0.010	mg/L	C	U	0.010	mg/L	C	U	0.010	mg/L	C	U
Chloroform	0.010	mg/L	C	U	0.010	mg/L	C	U	0.010	mg/L	C	U
Chloromethane	0.010	mg/L	C	U	0.010	mg/L	C	U	0.010	mg/L	C	U
Dibromochloromethane	0.010	mg/L	C	U	0.010	mg/L	C	U	0.010	mg/L	C	U
Ethylbenzene	0.010	mg/L	C	U	0.010	mg/L	C	U	0.010	mg/L	C	U
Methylene chloride	0.010	mg/L	C	UJ	0.010	mg/L	C	U	0.010	mg/L	C	U
Styrene	0.010	mg/L	C	U	0.010	mg/L	C	U	0.010	mg/L	C	UJ
Tetrachloroethene	0.010	mg/L	C	U	0.010	mg/L	C	U	0.010	mg/L	C	U
Toluene	0.010	mg/L	C	U	0.010	mg/L	C	U	0.010	mg/L	C	U
Trichloroethene	0.010	mg/L	C	U	0.010	mg/L	C	U	0.010	mg/L	C	U
Vinyl Acetate	NA				0.010	mg/L	C	U	0.010	mg/L	C	U
Vinyl chloride	0.010	mg/L	C	U	0.010	mg/L	C	U	0.010	mg/L	C	U
Xylenes, Total	0.010	mg/L	C	U	0.010	mg/L	C	U	0.010	mg/L	C	U
cis-1,3-Dichloropropene	0.010	mg/L	C	U	0.010	mg/L	C	U	0.010	mg/L	C	U
trans-1,3-Dichloropropene	0.010	mg/L	C	U	0.010	mg/L	C	U	0.010	mg/L	C	U

0032

5174

TABLE F-14

SOUTH FIELD
ON-SITE LABORATORY SCREENING RESULTS
PHASE II FIELD INVESTIGATION
OPERABLE UNIT 2 REMEDIAL INVESTIGATION
FERNALD ENVIRONMENTAL MANAGEMENT PROJECT

SURFACE WATER SCREENING SAMPLES

Location	Sample No.	Description	Date Collected	Total Uranium (µg/L)
SF-SW-01	110424	Surface Water	3/24/93	400
SF-SW-02	110434	Surface Water	3/25/93	540
SF-SW-05	113489	Surface Water	5/06/93	160
SF-SW-06	113490	Surface Water	5/06/93	250
SF-SW-07	113666	Surface Water	5/15/93	110
11018	112633	Surface Water at Hydropunch	4/17/93	560

GROUNDWATER SCREENING SAMPLES

Location	Sample No.	Description	Sample Interval (ft.)[a]	Date Collected	Total Uranium (µg/L)	Total Thorium (µg/L)	Radium-226/228 (pCi/g)	Lead (µg/L)
TRENCH 5	113807	Groundwater from Trench	6.0	7/9/93	500	400	<0.0021/1.6	-[b]
1046	116235	Existing MW[c]	NA[d]	5/11/93	21	-	-	-
1065	113292	Existing MW	NA	5/04/93	1.4	-	-	-
1065	113293	Existing MW	NA	5/04/93	1.3	-	-	-
1941	112999	New MW	NA	4/30/93	540	-	-	-
1942	110645	New MW	NA	4/15/93	55	-	-	-
1942	113001	New MW	NA	5/01/93	320	-	-	-
1954	113800	New MW	NA	6/22/93	44	-	-	-
2014	111994	Existing MW	NA	4/30/93	11	-	-	-
2046	116234	Existing MW	NA	5/11/93	470	-	-	-
2065	112009	Existing MW	NA	5/03/93	11	-	-	-
2065	112012	Existing MW	NA	5/03/93	11	-	-	-
2385	111999	Existing MW	NA	4/28/93	100	-	-	-
2401	116230	Existing MW	NA	5/11/93	4.8	-	-	-

See footnotes at end of table

TABLE F-14
(Continued)

GROUNDWATER SCREENING SAMPLES
(Continued)

Location	Sample No.	Description	Sample Interval (ft.)[a]	Date Collected	Total Uranium (µg/L)	Total Thorium (µg/L)	Radium-226/228 (pCi/g)	Lead (µg/L)
2943	113005	New MW	NA	5/05/93	3.5	-	-	-
2944	113868	New MW	NA	6/30/93	1.8	-	-	-
2945	112996	New MW	NA	4/28/93	2100	-	-	-
2954	113224	Hydropunch	60.0	5/28/93	760	-	-	-
2954	113797	New MW	NA	6/21/93	1200	-	-	-
11009	110597	Hydropunch	9.0-14.0	4/07/93	110	-	-	-
11010	110526	Hydropunch	9.0-13.0	4/05/93	14	-	-	-
11012	110714	Hydropunch	10.0-14.0	4/08/93	360	-	-	-
11013	112809	Hydropunch	5.5-9.5	4/17/93	22	-	-	-
11014	110487	Hydropunch	5.0-9.0	3/30/93	580	-	-	-
11015	110465	Hydropunch	8.0	3/25/93	270	-	-	-
11016	112829	Hydropunch	5.5-9.5	4/18/93	20	-	-	-
11018	112634	Hydropunch	21.0-24.0	4/17/93	700	-	-	-
11019	113050	Hydropunch	21.0-25.0	5/12/93	150	-	-	-
11020	113046	Hydropunch	19.0-23.0	5/11/93	75	-	-	-
11021	113054	Hydropunch	21.0-25.0	5/13/93	120	-	-	-
11022	113058	Hydropunch	21.0-25.0	5/13/93	4.2	-	-	17.9
11023	113062	Hydropunch	21.0-25.0	5/14/93	12	-	-	4.7
11024	113067	Hydropunch	6.5-10.5	5/15/93	540	-	-	-
11025	113071	Hydropunch	6.5-10.5	5/15/93	32	-	-	-
11026	113145	Hydropunch	10.0-14.5	5/15/93	7.8	-	-	-
11027	113104	Hydropunch	12.0-16.0	5/14/93	87	-	-	-
11028	113242	Hydropunch	55.0	5/25/93	210	-	-	35.1
11029	113007	Hydropunch	40.0-42.0	5/06/93	93	-	-	-
11030	116361	Hydropunch	62.0-67.0	6/01/93	54	-	-	30
11030	116362	Hydropunch	62.0-67.0	6/01/93	25	-	-	26.2
11032	113817	Hydropunch	8.0-12.0	6/24/93	17	-	-	-
11032	113870	New MW	NA	6/30/93	7.2	-	-	-

See footnotes at end of table

TABLE F-14
(Continued)

GROUNDWATER SCREENING SAMPLES
(Continued)

Location	Sample No.	Description	Sample Interval (ft.)[a]	Date Collected	Total Uranium (μg/L)	Total Thorium (μg/L)	Radium-226/228 (pCi/g)	Lead (μg/L)
11082	113693	Hydropunch	9.0-13.0	6/03/93	26	-	-	-
11083	113679	Hydropunch	9.0-13.0	6/02/93	<2	-	-	-
11084	113288	Hydropunch	10.5-14.5	6/01/93	19	-	-	-
11085	113794	New MW	NA	6/16/93	5000	-	-	-

SEDIMENT SCREENING SAMPLES

Location	Sample No.	Date Collected	Total Uranium (mg/kg)	Total Thorium (mg/kg)
SF-SD-01	110429	3/24/93	<11	-
SF-SD-02	110435	3/25/93	<11	-
SF-SD-03	110436	3/25/93	67	26

SURFACE SCREENING SAMPLES

Location	Sample No.	Sample Interval (ft)	Date Collected	Total Uranium (mg/kg)
11010	110511	0.0-0.5	4/2/93	68
11012	110687	0.0-0.5	4/7/93	122
11017	110488	0.0-0.5	4/1/93	<11

SUBSURFACE SCREENING SAMPLES

Location	Sample No.	Sample Interval (ft)	Date Collected	Total Uranium (mg/kg)	Total Thorium (mg/kg)	Radium-226/228 (pCi/g)
TRENCH 1	113716	2.0	6/3/93	143	-	-
TRENCH 2	113724	5.5	6/9/93	724	<18	12 / 0.7
TRENCH 2	113725	6.0	6/9/93	34	3540	9.3 / 85
TRENCH 4	113720	3.5	6/16/93	951	-	-
1941	112784	13.0-13.5	4/26/93	<11	-	-
1942	110644	17.5-18.0	4/15/93	<11	-	-
1964	112686	30.5-31.0	4/17/93	<11	-	-
1965	112764	28.0-28.5	4/21/93	<11	-	-
1966	112884	25.0-25.5	4/22/93	<11	-	-

See footnotes at end of table

5174

TABLE F-14
(Continued)

SUBSURFACE SCREENING SAMPLES (Continued)

Location	Sample No.	Sample Interval (ft)	Date Collected	Total Uranium (mg/kg)	Total Thorium (mg/kg)	Radium-226/ 228 (pCi/g)
1967	112732	31.0-31.5	4/19/93	<11	-	-
1968	112852	17.5-18.0	4/20/93	<11	-	-
1969	112566	13.5-14.0	4/15/93	<11	-	-
1970	112894	10.5-11.0	4/18/93	<11	-	-
1971	112594	11.0-11.5	4/15/93	<11	-	-
1972	112497	10.0-10.5	4/8/93	<11	-	-
1975	112551	10.0-10.5	4/13/93	<11	-	-
1977	110580	18.0-18.5	4/7/93	<11	-	-
1978	112589	15.0-15.5	4/16/93	<11	-	-
2943	110767	50.0-65.0	4/16/93	<11	-	-
2944	113769	50.0-65.0	6/14/93	<11	-	-
2954	113223	45.0-60.0	5/27/93	<11	-	-
11007	110678	22.5-23.0	4/21/93	<11	-	-
11009	110530	3.5-4.0	4/6/93	69	222	-
11009	110596	15.5-16.0	4/7/93	<11	-	-
11010	110525	13.5-14.0	4/5/93	<11	-	-
11011	110607	10.5-11.0	4/8/93	165	28	-
11011	110618	18.0-18.5	4/8/93	26	-	-
11012	110712	13.5-14.0	4/8/93	<11	-	-
11012	110713	14.0-14.5	4/8/93	<11	-	-
11013	112811	9.5-10.0	4/17/93	<11	-	-
11014	110470	1.0-1.5	3/30/93	14	<18	-
11014	110486	10.0-10.5	3/30/93	<11	-	-
11015	110437	0.5-1.0	3/25/93	<11	<18	-
11015	110464	14.5-15.0	3/25/93	<11	-	-
11016	112832	10.0-10.5	4/18/93	<11	-	-
11017	110510	16.5-17.0	4/1/93	<11	-	-
11018	112636	24.5-25.0	4/17/93	<11	-	-
11027	113102	16.5-18.0	5/12/93	<11	-	-

See footnotes at end of table

0936

TABLE F-14
(Continued)

SUBSURFACE SCREENING SAMPLES (Continued)

Location	Sample No.	Sample Interval (ft)	Date Collected	Total Uranium (mg/kg)	Total Thorium (mg/kg)	Radium-226/ 228 (pCi/g)
11186 (1973)	112516	12.0-12.5	4/12/93	<11	-	-
11187 (1974)	112527	10.5-11.0	4/13/93	11	-	-
11188 (1976)	110559	11.5-12.0	4/2/93	<11	-	-

CONCRETE CORE SCREENING SAMPLES

Location	Sample No.	Date Collected	Total Uranium (mg/kg)	Total Thorium (mg/kg)	Radium-226/288 (pCi/g)
SP-1[e]	93-461-7852	7/15/93			1.2/0.47
SP-2	93-461-7853	7/15/93	34	<45	2.6/0.26
SP-2b	93-461-7854	7/15/93	24	<45	1.1/0.14

ALPHA/BETA SCREENING SAMPLES

Location	Sample No.	Sample Interval (ft)	Date Collected	Alpha Activity (pCi/g)	Beta Activity (pCi/g)
TRENCH 1	113105	7.0	5/28/93	34	40
TRENCH 2	113724	5.5	6/9/93	1300	1300
	113725	6.0	6/29/93	350	240
SF-SS-17	110299	0.0-0.5	3/18/93	17	<18
SF-SS-18	110289	0.0-0.5	3/18/93	9.1	<18
SF-SS-21	110309	0.0-0.5	3/18/93	17	<18

[a]The sample interval is depth, in feet, below the ground surface.

[b]Sample not analyzed for parameter indicated.

[c]MW = Monitoring Well

[d]NA = Not applicable

[e]Total uranium and total thorium results not yet available.

TABLE F-15A

SOUTH FIELD
ON-SITE LABORATORY CIS SCREENING RESULTS
ACTIVITY CONCENTRATIONS IN PROFILE SAMPLES
OPERABLE UNIT 2 REMEDIAL INVESTIGATION
FERNALD ENVIRONMENTAL MANAGEMENT PROJECT

Begin - End Depth (feet)	Radionuclide	Qualifier[a]	Activity Concentrations (pCi/g)	Uncertainty (pCi/g)
BOREHOLE 24-01				
0 - 2	Radium-226		31.50	1.80
0 - 2	Thorium-232		3.40	2.80
0 - 2	Uranium-238	<[b]	58.20	NA
2 - 3	Radium-226		2.70	0.70
2 - 3	Thorium-232	<	0.50	NA
2 - 3	Uranium-238		9.90	6.50
3 - 4	Radium-226		0.70	0.50
3 - 4	Thorium-232		1.00	0.40
3 - 4	Uranium-238	<	14.60	NA
4 - 6	Radium-226		1.90	0.80
4 - 6	Thorium-232		1.90	0.80
4 - 6	Uranium-238		16.20	4.80
6 - 7	Radium-226		1.40	0.70
6 - 7	Thorium-232	<	2.20	NA
6 - 7	Uranium-238	<	9.10	NA
7 - 8	Radium-226		1.00	0.60
7 - 8	Thorium-232		0.90	0.40
7 - 8	Uranium-238	<	7.30	NA
BOREHOLE 24-02				
0 - 2	Radium-226	<	3.70	NA
0 - 2	Thorium-232		7.60	1.10
0 - 2	Uranium-238	<	27.50	NA
2 - 4	Radium-226		0.60	0.30
2 - 4	Thorium-232		1.40	0.60
2 - 4	Uranium-238	<	7.60	NA
4 - 6	Radium-226		1.00	0.80
4 - 6	Thorium-232		1.90	0.70
4 - 6	Uranium-238	<	16.20	NA
6 - 8	Radium-226		0.60	0.50
6 - 8	Thorium-232		1.30	0.50
6 - 8	Uranium-238	<	11.30	NA
10 - 11	Radium-226		0.50	0.40
10 - 11	Thorium-232		0.60	0.50

See footnotes at end of table

TABLE F-15A
(Continued)

Begin - End Depth (feet)	Radionuclide	Qualifier[a]	Activity Concentrations (pCi/g)	Uncertainty (pCi/g)
		BOREHOLE 24-02 (Continued)		
10 - 11	Uranium-238	<	9.80	NA
11 - 12	Radium-226		0.80	0.50
11 - 12	Thorium-232	<	0.30	NA
11 - 12	Uranium-238	<	12.10	NA
12 - 13	Radium-226		0.80	0.60
12 - 13	Thorium-232		0.80	0.50
12 - 13	Uranium-238		3.70	2.60
13 - 14	Radium-226		1.00	0.30
13 - 14	Thorium-232		1.00	0.40
13 - 14	Uranium-238	<	8.70	NA
14 - 16	Radium-226		1.00	0.60
14 - 16	Thorium-232		1.70	0.60
14 - 16	Uranium-238	<	11.20	NA
16 - 17	Radium-226	<	1.20	NA
16 - 17	Thorium-232		0.50	0.30
16 - 17	Uranium-238	<	2.70	1.00
17 - 18	Radium-226		0.50	0.30
17 - 18	Thorium-232	<	0.30	NA
17 - 18	Uranium-238	<	7.90	NA
18 - 19	Radium-226		0.50	0.30
18 - 19	Thorium-232		0.50	0.40
18 - 19	Uranium-238	<	9.40	NA
19 - 20	Radium-226	<	1.20	NA
19 - 20	Thorium-232		0.90	0.40
19 - 20	Uranium-238	<	11.10	NA
		BOREHOLE 24-03		
0 - 2	Radium-226		0.70	0.30
0 - 2	Thorium-232		1.00	0.40
0 - 2	Uranium-238		17.80	4.70
2 - 3	Radium-226	<	1.00	NA
2 - 3	Thorium-232		1.00	0.50
2 - 3	Uranium-238		14.30	3.90
3 - 4	Radium-226		0.80	0.50
3 - 4	Thorium-232	<	5.00	NA
3 - 4	Uranium-238		7.80	3.10
4 - 5	Radium-226		0.60	0.40
4 - 5	Thorium-232	<	3.10	NA

0939

See footnotes at end of table

TABLE F-15A
(Continued)

Begin - End Depth (feet)	Radionuclide	Qualifier[a]	Activity Concentrations (pCi/g)	Uncertainty (pCi/g)
		BOREHOLE 24-03 (Continued)		
4 - 5	Uranium-238		6.20	2.40
5 - 6	Radium-226	<	1.10	NA
5 - 6	Thorium-232		0.60	0.40
5 - 6	Uranium-238	<	5.00	3.10
6 - 7	Radium-226		0.80	0.60
6 - 7	Thorium-232		1.20	0.50
6 - 7	Uranium-238	<	13.50	NA
7 - 8	Radium-226		1.20	0.30
7 - 8	Thorium-232	<	0.80	NA
7 - 8	Uranium-238		3.80	1.50
8 - 9	Radium-226	<	0.70	NA
8 - 9	Thorium-232		0.70	0.60
8 - 9	Uranium-238	<	13.00	NA
9 - 10	Radium-226		0.80	0.40
9 - 10	Thorium-232		0.80	0.50
9 - 10	Uranium-238	<	10.60	NA
		BOREHOLE 24-04		
0 - 1	Radium-226		4.80	1.00
0 - 1	Thorium-232	<	5.90	NA
0 - 1	Uranium-238	<	29.00	NA
1 - 2	Radium-226		.90	0.60
1 - 2	Thorium-232		1.40	0.70
1 - 2	Uranium-238		11.10	5.60
2 - 3	Radium-226		1.10	0.90
2 - 3	Thorium-232		0.90	0.50
2 - 3	Uranium-238		9.80	3.60
3 - 4	Radium-226		1.10	0.50
3 - 4	Thorium-232		1.00	0.60
3 - 4	Uranium-238	<	8.70	NA
		BOREHOLE 24-05		
0 - 1	Radium-226		46.00	1.10
0 - 1	Thorium-232	<	7.30	NA
0 - 1	Uranium-238	<	32.80	NA
1 - 2	Radium-226		34.00	2.10
1 - 2	Uranium-238	<	46.20	NA
2 - 3	Radium-226		1.20	0.80
2 - 3	Thorium-232		1.10	0.50

See footnotes at end of table

0940

TABLE F-15A
(Continued)

Begin - End Depth (feet)	Radionuclide	Qualifier[a]	Activity Concentrations (pCi/g)	Uncertainty (pCi/g)
		BOREHOLE 24-05 (Continued)		
2 - 3	Uranium-238		9.30	3.60
3 - 4	Radium-226	<	1.20	NA
3 - 4	Thorium-232	<	0.40	NA
3 - 4	Uranium-238	<	16.00	NA
4 - 5	Radium-226		1.70	0.90
4 - 5	Thorium-232	<	0.60	NA
4 - 5	Uranium-238	<	9.30	NA
5 - 6	Radium-226		0.80	0.50
5 - 6	Thorium-232	<	0.40	NA
5 - 6	Uranium-238	<	7.00	NA
6 - 7	Radium-226		1.20	0.50
6 - 7	Thorium-232	<	0.50	NA
6 - 7	Uranium-238	<	14.70	NA
7 - 8	Radium-226		1.00	0.40
7 - 8	Thorium-232	<	3.80	NA
7 - 8	Uranium-238	<	14.20	NA
		BOREHOLE 24-06		
0 - 1	Radium-226		5.60	0.80
0 - 1	Thorium-232	<	4.60	NA
0 - 1	Uranium-238	<	32.90	NA
1 - 2	Radium-226		1.70	0.40
1 - 2	Thorium-232		2.10	0.50
1 - 2	Uranium-238	<	18.30	NA
2 - 3	Radium-226		0.60	0.40
2 - 3	Thorium-232	<	0.80	NA
2 - 3	Uranium-238	<	15.40	NA
3 - 4	Radium-226		1.10	0.50
3 - 4	Thorium-232		1.00	0.70
3 - 4	Uranium-238	<	13.10	NA
4 - 5	Radium-226		0.60	0.30
4 - 5	Thorium-232		0.50	0.30
4 - 5	Uranium-238	<	5.00	NA
5 - 6	Radium-226	<	0.30	NA
5 - 6	Thorium-232	<	4.70	NA
5 - 6	Uranium-238	<	12.70	NA
6 - 8	Radium-226		0.60	0.30
6 - 8	Thorium-232		0.80	0.30
6 - 8	Uranium-238	<	8.10	NA

See footnotes at end of table

0941

TABLE F-15A
(Continued)

Begin - End Depth (feet)	Radionuclide	Qualifier[a]	Activity Concentrations (pCi/g)	Uncertainty (pCi/g)
		BOREHOLE 24-07		
0 - 1	Radium-226		4.50	1.60
0 - 1	Thorium-232		25.20	1.70
0 - 1	Uranium-238		38.60	9.70
1 - 2	Radium-226		1.30	0.40
1 - 2	Thorium-232		1.90	0.60
1 - 2	Uranium-238		12.30	3.70
2 - 3	Radium-226		0.80	0.40
2 - 3	Thorium-232		1.50	0.60
2 - 3	Uranium-238		15.20	3.70
3 - 4	Radium-226	<	1.30	NA
3 - 4	Thorium-232		1.00	0.50
3 - 4	Uranium-238		5.50	2.50
4 - 5	Radium-226		1.00	0.60
4 - 5	Thorium-232		1.00	0.60
4 - 5	Uranium-238	<	6.80	NA
5 - 6	Radium-226	<	1.90	NA
5 - 6	Thorium-232	<	1.50	NA
5 - 6	Uranium-238	<	10.00	NA
6 - 8	Radium-226	<	0.80	NA
6 - 8	Thorium-232	<	0.30	NA
6 - 8	Uranium-238	<	12.30	NA
		BOREHOLE 24-08		
0 - 1.30	Radium-226	<	2.10	NA
0 - 1.30	Thorium-232		36.50	2.20
0 - 1.30	Uranium-238		30.00	10.10
4 - 5	Radium-226	<	0.10	NA
4 - 5	Thorium-232		1.20	0.40
4 - 5	Uranium-238	<	11.50	NA
5 - 6	Radium-226		0.60	0.40
5 - 6	Thorium-232		0.80	0.30
5 - 6	Uranium-238	<	5.30	NA
6 - 8	Radium-226		0.50	0.40
6 - 8	Thorium-232		1.10	0.30
6 - 8	Uranium-238	<	8.00	NA
		BOREHOLE 24-09		
0 - 1	Radium-226	<	5.50	NA
0 - 1	Thorium-232		78.10	2.90
0 - 1	Uranium-238	<	39.30	NA
1 - 2	Radium-226	<	5.10	NA

See footnotes at end of table

0942

TABLE F-15A
(Continued)

Begin - End Depth (feet)	Radionuclide	Qualifier[a]	Activity Concentrations (pCi/g)	Uncertainty (pCi/g)
		BOREHOLE 24-09 (Continued)		
1 - 2	Thorium-232		101.00	2.90
1 - 2	Uranium-238	<	41.40	NA
2 - 4	Radium-226		2.60	0.90
2 - 4	Thorium-232		4.20	0.60
2 - 4	Uranium-238		12.30	3.60
4 - 6	Radium-226		1.90	0.60
4 - 6	Thorium-232		3.90	0.80
4 - 6	Uranium-238	<	27.40	NA
6 - 8	Radium-226		1.70	0.60
6 - 8	Thorium-232		6.70	1.30
6 - 8	Uranium-238		22.10	7.20
8 - 9	Radium-226		1.20	0.80
8 - 9	Thorium-232		2.60	0.70
8 - 9	Uranium-238		10.70	4.20
9 - 10	Radium-226		0.90	0.50
9 - 10	Thorium-232		0.80	0.40
9 - 10	Uranium-238		6.30	3.70
10 - 11	Radium-226	<	1.80	NA
10 - 11	Thorium-232		0.90	0.40
10 - 11	Uranium-238	<	7.10	NA
11 - 12	Radium-226		0.90	0.30
11 - 12	Thorium-232	<	1.60	NA
11 - 12	Uranium-238	<	10.50	NA
12 - 13	Radium-226		0.70	0.30
12 - 13	Thorium-232	<	2.50	NA
12 - 13	Uranium-238	<	8.30	NA
13 - 14	Radium-226		0.80	0.60
13 - 14	Thorium-232		0.80	0.40
13 - 14	Uranium-238	<	9.00	NA
		BOREHOLE 24-12		
0 - 1	Radium-226	<	0.10	NA
0 - 1	Thorium-232	<	2.30	NA
0 - 1	Uranium-238	<	9.00	NA
1 - 2	Radium-226		1.10	0.30
1 - 2	Thorium-232		0.70	0.60
1 - 2	Uranium-238	<	7.60	NA
2 - 4	Radium-226		0.60	0.40
2 - 4	Thorium-232		0.60	0.30

0943

See footnotes at end of table

TABLE F-15A
(Continued)

Begin - End Depth (feet)	Radionuclide	Qualifier[a]	Activity Concentrations (pCi/g)	Uncertainty (pCi/g)
		BOREHOLE 24-12 (Continued)		
2 - 4	Uranium-238	<	9.30	NA
4 - 6	Radium-226		0.90	0.30
4 - 6	Thorium-232		1.10	0.50
4 - 6	Uranium-238		5.30	2.80
6 - 7	Radium-226		0.70	0.40
6 - 7	Thorium-232		0.90	0.40
6 - 7	Uranium-238		13.20	3.10
7 - 8	Radium-226		1.40	1.00
7 - 8	Thorium-232		2.00	0.60
7 - 8	Uranium-238		22.00	4.20
8 - 10	Radium-226		1.20	0.90
8 - 10	Thorium-232		1.00	0.60
8 - 10	Uranium-238		5.90	3.90
10 - 12	Radium-226		1.00	0.50
10 - 12	Thorium-232		4.30	0.60
10 - 12	Uranium-238		12.80	5.60
12 - 14	Radium-226		0.60	0.50
12 - 14	Thorium-232		1.50	0.60
12 - 14	Uranium-238		6.30	3.90
16 - 17	Radium-226	<	1.70	NA
16 - 17	Thorium-232	<	0.30	NA
16 - 17	Uranium-238	<	5.40	NA
17 - 18	Radium-226	<	0.80	NA
17 - 18	Thorium-232		0.70	0.40
17 - 18	Uranium-238	<	4.20	NA

[a]Laboratory Qualifiers, no data validation was performed on screening data.

[b]< = Less than

TABLE F-15B

SOUTH FIELD
CIS SURFACE SOIL RADIOLOGICAL RESULTS
OPERABLE UNIT 2 REMEDIAL INVESTIGATION
FERNALD ENVIRONMENTAL MANAGEMENT PROJECT

FEMP ID #	Isotope	Activity (pCi/g)	Uncertainty	Laboratory Qualifier
FMP-SL-24-026	Cesium-137	0.1		<
	Potassium-40	12.3	4.9	
	Radium-226	0.2	0.1	
	Ruthenium-106	0.4		<
	Thorium-232	1	0.3	
	Uranium-238	14.5		<
FMP-SL-24-027	Cesium-137	0.4		<
	Potassium-40	11.4	4.5	
	Radium-226	1.5		<
	Ruthenium-106	4.1		<
	Thorium-232	10.2	2.4	
	Uranium-238	19.4		<
FMP-SL-24-028	Cesium-137	0.3		<
	Potassium-40	8.2	3.6	
	Radium-226	0.7		<
	Ruthenium-106	4.2		<
	Thorium-232	4.4	0.7	
	Uranium-238	12.6	4.7	
FMP-SL-24-029	Cesium-137	0.4		<
	Potassium-40	6.7	2.7	
	Radium-226	2.8	0.5	
	Ruthenium-106	0.5		<
	Thorium-232	1.8		<
	Uranium-238	2	1.6	
FMP-SL-24-029D	Cesium-137	0.4	0.2	
	Potassium-40	8	3	
	Radium-226	3	0.5	
	Ruthenium-106	1.9		<

TABLE F-15B
(Continued)

FEMP ID #	Isotope	Activity (pCi/g)	Uncertainty	Laboratory Qualifier
FMP-SL-24-029D (Continued)	Thorium-232	1.8		<
	Uranium-238	11.3		<
FMP-SL-24-030	Cesium-137	0.1		<
	Potassium-40	11.9	4.7	
	Radium-226	0.7	0.3	
	Ruthenium-106	6.7		<
	Thorium-232	0.3		<
	Uranium-238	2.5	1.8	
FMP-SL-24-031	Cesium-137	0.5		<
	Thorium-232	0.7	0.3	
	Potassium-40	4.9	2	
	Radium-226	1		<
	Ruthenium-106	6.6		<
	Uranium-238	3.8	1.8	
FMP-SL-24-032	Cesium-137	0.9		<
	Potassium-40	7.8	3.3	
	Radium-226	1.4	0.3	
	Ruthenium-106	0.5		<
	Thorium-232	0.3		<
	Uranium-238	2	1.3	
FMP-SL-24-032D	Cesium-137	0.6		<
	Potassium-40	8.2	3.2	
	Radium-226	1.6	0.5	
	Ruthenium-106	7.5		<
	Thorium-232	0.3	0.2	
	Uranium-238	16.7		<
FMP-SL-24-033	Cesium-137	0.6		<
	Potassium-40	11.2	4	
	Radium-226	4.2	0.3	
	Ruthenium-106	8.3		<
	Thorium-232	5.6		<
	Uranium-238	25.5		<

0946

TABLE F-15B
(Continued)

FEMP ID #	Isotope	Activity (pCi/g)	Uncertainty	Laboratory Qualifier
FMP-SL-24-034	Cesium-137	0.7		<
	Potassium-40	9.4	3.7	
	Radium-226	2.6	0.3	
	Ruthenium-106	4.2		<
	Thorium-232	0.3		<
	Uranium-238	10.5	3.8	
FMP-SL-24-035	Cesium-137	1		<
	Potassium-40	5.6		<
	Radium-226	3.1	0.5	
	Ruthenium-106	8.8		<
	Thorium-232	3		<
	Uranium-238	20		<
FMP-SL-24-036	Cesium-137	1.5		<
	Potassium-40	6.5	3	
	Radium-226	8.7	0.8	
	Ruthenium-106	3.7		<
	Thorium-232	3.3	1.5	
	Uranium-238	28.1		<
FMP-SL-24-037	Cesium-137	0.6		<
	Potassium-40	10.1	3.7	
	Radium-226	7.5	0.8	
	Ruthenium-106	5.4		<
	Thorium-232	0.7	0.2	
	Uranium-238	12.7		<
FMP-SL-24-038	Cesium-137	0.6		<
	Potassium-40	8.1	3.3	
	Radium-226	2.5	0.2	
	Ruthenium-106	7.1		<
	Thorium-232	1.3	0.5	
	Uranium-238	13.1		<

TABLE F-15B
(Continued)

FEMP ID #	Isotope	Activity (pCi/g)	Uncertainty	Laboratory Qualifier
FMP-SL-24-040	Cesium-137	0.5	0.4	
	Potassium-40	10.4	3.8	
	Radium-226	2.1		<
	Ruthenium-106	9.2		<
	Thorium-232	6.6	2.4	
	Uranium-238	5.3	4.6	
FMP-SL-24-041	Cesium-137	0.4		<
	Potassium-40	11.5	4	
	Radium-226	2.4	0.5	
	Ruthenium-106	0.5		<
	Thorium-232	0.3		<
	Uranium-238	14.6		<
FMP-SL-24-042	Cesium-137	1.3		<
	Potassium-40	9.7	3.6	
	Radium-226	3.8	0.5	
	Ruthenium-106	4.2		<
	Thorium-232	0.3		<
	Uranium-238	15.4		<
FMP-SL-24-042D	Cesium-137	1.2		<
	Potassium-40	8.4	3.4	
	Radium-226	4	0.7	
	Ruthenium-106	3.4		<
	Thorium-232	0.3		<
	Uranium-238	17.9		<
FMP-SL-24-044	Cesium-137	0.8		<
	Potassium-40	10.5	4	
	Radium-226	8.6	0.7	
	Ruthenium-106	4.9		<
	Thorium-230	91.9	80	
	Thorium-232	3.7		<
	Uranium-238	33.3		<

TABLE F-15B
(Continued)

FEMP ID #	Isotope	Activity (pCi/g)	Uncertainty	Laboratory Qualifier
FMP-SL-24-045	Cesium-137	0.5		<
	Potassium-40	4.4	2.8	
	Radium-226	6.2	0.6	
	Ruthenium-106	8.1		<
	Thorium-230	115	110	
	Thorium-232	0.2		<
	Uranium-238	25.3		<
FMP-SL-24-045D	Cesium-137	0.2		<
	Potassium-40	7.9	4.6	
	Radium-226	5.2	0.6	
	Ruthenium-106	0.5		<
	Thorium-230	106	50	
	Thorium-232	1.3		<
	Uranium-238	27.1		<
FMP-SL-24-048	Cesium-137	1.6		<
	Potassium-40	14.9		<
	Radium-226	74.2	2.1	
	Ruthenium-106	23.8		<
	Thorium-230	964	250	
	Thorium-232	3.5		<
	Uranium-238	21.9	9.5	
FMP-SL-24-049	Potassium-40	24.8		<
	Radium-226	109	2.5	
	Ruthenium-106	23		<
	Thorium-232	9.1	4.1	
	Uranium-238	19.6	6.8	
	Cesium-137	3.3		<
	Thorium-230	1620	308	
FMP-SL-24-051	Cesium-137	1.7		<
	Potassium-40	9.1		<
	Radium-226	29.3	1.3	
	Ruthenium-106	17.1		<

TABLE F-15B
(Continued)

FEMP ID #	Isotope	Activity (pCi/g)	Uncertainty	Laboratory Qualifier
FMP-SL-24-051 (Continued)	Thorium-230	454	192	
	Thorium-232	3.1		<
	Uranium-238	15.8	4.3	
FMP-SL-24-052	Cesium-137	1.6		<
	Potassium-40	14.4		<
	Radium-226	28.2	1.3	
	Ruthenium-106	13.4		<
	Thorium-230	302	175	
	Thorium-232	8.1	2.4	
	Uranium-238	20		<
FMP-SL-24-054	Cesium-137	1.1		<
	Potassium-40	8.4	5	
	Radium-226	2.8		<
	Ruthenium-106	8.2		<
	Thorium-230	279		<
	Thorium-232	10	0.9	
	Uranium-238	5.7	2.9	
FMP-SL-24-055	Cesium-137	2.6		<
	Potassium-40	11.3	6.9	
	Radium-226	2.6		<
	Ruthenium-106	18.3		<
	Thorium-230	329		<
	Thorium-232	33.7	4.3	
	Uranium-238	15.6		<
FMP-SL-24-055D	Cesium-137	2.3		<
	Potassium-40	13.5	5.6	
	Radium-226	2.1		<
	Ruthenium-106	9.2		<
	Thorium-230	588		<
	Thorium-232	36.4	3.8	
	Uranium-238	12.2		<

TABLE F-15B
(Continued)

FEMP ID #	Isotope	Activity (pCi/g)	Uncertainty	Laboratory Qualifier
FMP-SL-24-056	Cesium-137	0.4		<
	Potassium-40	11.7	3.6	
	Radium-226	0.7	0.4	
	Ruthenium-106	9.8		<
	Thorium-230	251		<
	Thorium-232	4.5	0.5	
	Uranium-238	19.6		<
FMP-SL-24-056D	Cesium-137	0.3		<
	Potassium-40	8.6	3.2	
	Radium-226	1.1	0.3	
	Ruthenium-106	0.5		<
	Thorium-232	0.3		<
	Uranium-238	3.4		<
FMP-SL-24-058	Cesium-137	0.3	0.2	
	Potassium-40	11.3	4.4	
	Radium-226	3.2	0.5	
	Ruthenium-106	9.1		<
	Thorium-230	329		<
	Thorium-232	2		<
	Uranium-238	6.3	5	
FMP-SL-24-059	Cesium-137	1.3		<
	Potassium-40	11.2	4.3	
	Radium-226	1.9	0.4	
	Ruthenium-106	7.1		<
	Thorium-230	244		<
	Thorium-232	0.8	0.7	
	Uranium-238	6.7		<
FMP-SL-24-061	Cesium-137	0.5		<
	Potassium-40	12.1	3.7	
	Radium-226	6.3	0.6	

TABLE F-15B
(Continued)

FEMP ID #	Isotope	Activity (pCi/g)	Uncertainty	Laboratory Qualifier
FMP-SL-24-061 (Continued)	Ruthenium-106	6.6		<
	Thorium-232	1	0.5	
	Uranium-238	16.4		<
FMP-SL-24-062	Cesium-137	0.4		<
	Potassium-40	10.8	3.5	
	Radium-226	2	0.4	
	Ruthenium-106	4.7		<
	Thorium-232	1.3		<
	Uranium-238	5.3	2.1	
FMP-SL-24-063	Cesium-137	0.4		<
	Potassium-40	12.1	3.6	
	Radium-226	7.4	0.7	
	Ruthenium-106	3.4		<
	Thorium-230	82	22	
	Thorium-232	1.6		<
	Uranium-238	31.8		<
FMP-SL-24-065	Cesium-137	0.2		<
	Thorium-232	2.2		<
	Potassium-40	9.4	4.6	
	Ruthenium-106	3.1		<
	Radium-226	0.4	0.2	
	Uranium-238	19.8	3.7	
FMP-SL-24-065D	Cesium-137	0.2		<
	Potassium-40	7.4	3	
	Radium-226	0.5	0.3	
	Ruthenium-106	2.2		<
	Thorium-232	1.1		<
	Uranium-238	20.9	3.1	
FMP-SL-24-067	Cesium-137	0.6		<
	Potassium-40	8.5	3.6	
	Radium-226	0.7	0.3	
	Ruthenium-106	0.5		<

5174

TABLE F-15B
(Continued)

FEMP ID #	Isotope	Activity (pCi/g)	Uncertainty	Laboratory Qualifier
FMP-SL-24-067 (Continued)	Thorium-232	2.4		<
	Uranium-238	26	3.6	
FMP-SL-24-069	Cesium-137	0.5		<
	Potassium-40	9.2	3.5	
	Radium-226	5.1	0.6	
	Ruthenium-106	2.6		<
	Thorium-232	3.4	1.5	
	Uranium-238	11.4	4.8	
FMP-SL-24-071	Cesium-137	0.8		<
	Potassium-40	7.6	3.7	
	Radium-226	7	0.9	
	Ruthenium-106	5.9		<
	Thorium-230	135		<
	Thorium-232	6.8	3.7	
	Uranium-238	19.2		<
FMP-SL-24-073	Cesium-137	0.3		<
	Potassium-40	7.8	3.1	
	Radium-226	2.6	0.5	
	Ruthenium-106	3.7		<
	Thorium-232	2.6		<
	Uranium-238	6.3	4.2	
FMP-SL-24-074	Cesium-137	0.4		<
	Potassium-40	12.7	4.2	
	Radium-226	0.7	0.5	
	Ruthenium-106	3.7		<
	Thorium-232	0.7	0.4	
	Uranium-238	2.9	1.3	
FMP-SL-24-076	Cesium-137	0.3		<
	Potassium-40	11.6	4	
	Radium-226	1.7		<
	Ruthenium-106	2.8		<

0953

TABLE F-15B
(Continued)

FEMP ID #	Isotope	Activity (pCi/g)	Uncertainty	Laboratory Qualifier
FMP-SL-24-076 (Continued)	Thorium-232	0.7	0.3	
	Uranium-238	55.6	6	
FMP-SL-24-078	Cesium-137	0.9		<
	Potassium-40	1		<
	Radium-226	5.8	0.8	
	Ruthenium-106	6		<
	Thorium-232	2.6		<
	Uranium-238	6.5	4.9	
FMP-SL-24-079	Cesium-137	0.2		<
	Potassium-40	8.7	4	
	Radium-226	6.4	0.8	
	Ruthenium-106	4.1		<
	Thorium-232	1.4		<
	Uranium-238	9.3		<
FMP-SL-24-080	Cesium-137	0.6		<
	Potassium-40	8.8	3.6	
	Radium-226	2.8	0.5	
	Ruthenium-106	7.8		<
	Thorium-232	0.4	0.3	
	Uranium-238	5	3.1	
FMP-SL-24-082	Cesium-137	0.7		<
	Thorium-232	0.8	0.5	
	Potassium-40	9.3	4.5	
	Ruthenium-106	3.1		<
	Radium-226	1.8	0.4	
	Uranium-238	21.5	3.5	
FMP-SL-24-085	Cesium-137	1.2		<
	Potassium-40	9.5	3.6	
	Radium-226	27.5	1.4	
	Ruthenium-106	5.1		<
	Thorium-232	6.8		<
	Uranium-238	24.1		<

5174

TABLE F-15B
(Continued)

FEMP ID #	Isotope	Activity (pCi/g)	Uncertainty	Laboratory Qualifier
FMP-SL-24-086	Cesium-137	0.1		<
	Potassium-40	8.4	3.3	
	Radium-226	6.3	0.7	
	Ruthenium-106	4.9		<
	Thorium-232	2		<
	Uranium-238	15.5		<
FMP-SL-24-086D	Cesium-137	0.8		<
	Potassium-40	6.6	2.9	
	Radium-226	7.4	0.7	
	Ruthenium-106	6.7		<
	Thorium-232	3.1		<
	Uranium-238	8.1		<
FMP-SL-24-088	Cesium-137	0.5		<
	Potassium-40	8.3	2.9	
	Radium-226	15.2	1.2	
	Ruthenium-106	7.8		<
	Thorium-232	1.1	0.8	
	Uranium-238	19.4		<
FMP-SL-24-090	Cesium-137	1		<
	Uranium-238	30.9		<
	Ruthenium-106	9.6		<
	Radium-226	40.5	1.6	
	Potassium-40	13.9		<
	Thorium-232	4.5		<
FMP-SL-24-091	Cesium-137	0.5		<
	Potassium-40	10.6	3.9	
	Radium-226	7.9	0.8	
	Ruthenium-106	7.2		<
	Thorium-232	3.7		<
	Uranium-238	15.7		<

0355

TABLE F-15B
(Continued)

FEMP ID #	Isotope	Activity (pCi/g)	Uncertainty	Laboratory Qualifier
FMP-SL-24-094	Cesium-137	1.6		<
	Potassium-40	13.3		<
	Radium-226	51.8	1.8	
	Ruthenium-106	6.7		<
	Thorium-232	7.2		<
	Uranium-238	20.7		<
FMP-SL-24-095	Cesium-137	1.5		<
	Potassium-40	12.8	3	
	Radium-226	37	1.7	
	Ruthenium-106	7.1		<
	Thorium-232	2.7		<
	Uranium-238	18.3		<
FMP-SL-24-097	Cesium-137	1.4		<
	Potassium-40	6.4		<
	Radium-226	13.8	1	
	Ruthenium-106	4.5		<
	Thorium-232	1.5		<
	Uranium-238	23.4		<
FMP-SL-24-098	Cesium-137	0.7		<
	Potassium-40	7.3	3	
	Radium-226	7.5	0.7	
	Ruthenium-106	5		<
	Thorium-232	1.1	0.7	
	Uranium-238	11.5		<
FMP-SL-24-100	Cesium-137	0.6		<
	Potassium-40	7.3	2.8	
	Radium-226	5.4	0.7	
	Ruthenium-106	5.4		<
	Thorium-232	1.6		<
	Uranium-238	7.7	4.2	

0956

TABLE F-15B
(Continued)

FEMP ID #	Isotope	Activity (pCi/g)	Uncertainty	Laboratory Qualifier
FMP-SL-24-102	Cesium-137	0.6		<
	Potassium-40	7.9	4	
	Radium-226	4.1	0.6	
	Ruthenium-106	4		<
	Thorium-232	1.8	0.6	
	Uranium-238	14.9		<
FMP-SL-24-104	Cesium-137	0.9		<
	Potassium-40	15.9		<
	Radium-226	8.7	0.8	
	Ruthenium-106	3.8		<
	Thorium-232	0.5	0.2	
	Uranium-238	17		<
FMP-SL-24-105	Cesium-137	0.6		<
	Potassium-40	11.2	3.2	
	Radium-226	9.2	0.9	
	Ruthenium-106	4.6		<
	Thorium-232	1.4		<
	Uranium-238	19.3		<
FMP-SL-24-109	Cesium-137	0.8		<
	Potassium-40	6.8	4.8	
	Thorium-232	4.9		<
	Radium-226	14.7	1	
	Ruthenium-106	7.4		<
	Uranium-238	9.9	5.7	
FMP-SL-24-110QC	Cesium-137	0.9		<
	Potassium-40	14.6	4.3	
	Radium-226	12.4	1	
	Ruthenium-106	0.5		<
	Thorium-232	2.4		<
	Uranium-238	15.3		<

0957

TABLE F-15B
(Continued)

FEMP ID #	Isotope	Activity (pCi/g)	Uncertainty	Laboratory Qualifier
FMP-SL-24-111	Cesium-137	0.6		<
	Potassium-40	10.2	3.6	
	Thorium-232	3.5		<
	Radium-226	13.1	1	
	Ruthenium-106	10.1		<
	Uranium-238	23.4		<
FMP-SL-24-113	Cesium-137	2.9		<
	Potassium-40	18.2		<
	Thorium-232	6.1		<
	Radium-226	96.5	2.6	
	Ruthenium-106	10		<
	Uranium-238	33.9		<
FMP-SL-24-114	Cesium-137	2.3		<
	Potassium-40	10.2	4.8	
	Radium-226	84.8	2.5	
	Ruthenium-106	11		<
	Thorium-232	8.8		<
	Uranium-238	49.3		<
FMP-SL-24-116	Cesium-137	2.3		<
	Potassium-40	18		<
	Thorium-232	7.4		<
	Radium-226	60.1	2.3	
	Ruthenium-106	14.3		<
	Uranium-238	48.2		<
FMP-SL-24-116D	Cesium-137	1.9		<
	Potassium-40	21.8		<
	Radium-226	62.6	2	
	Ruthenium-106	8.3		<
	Thorium-232	6.3		<
	Uranium-238	26.4		<

0958

TABLE F-15B
(Continued)

FEMP ID #	Isotope	Activity (pCi/g)	Uncertainty	Laboratory Qualifier
FMP-SL-24-117	Cesium-137	2		<
	Potassium-40	15.9		<
	Ruthenium-106	8.4		<
	Radium-226	52.7	2.1	
	Thorium-232	3.3		<
	Uranium-238	33.4	10	
FMP-SL-24-118	Cesium-137	1.9		<
	Potassium-40	20.1		<
	Radium-226	40	1.8	
	Ruthenium-106	11.6		<
	Thorium-232	3.2		<
	Uranium-238	15.4	10	
FMP-SL-24-119QC	Cesium-137	0.9		<
	Potassium-40	9.9		<
	Radium-226	29.9	1.4	
	Ruthenium-106	14.7		<
	Thorium-232	5		<
	Uranium-238	19	8	
FMP-SL-24-121	Cesium-137	2		<
	Potassium-40	8	5.7	
	Ruthenium-106	10.7		<
	Radium-226	3.2	1.2	
	Thorium-232	43.6	4.8	
	Uranium-238	40.7	15	
FMP-SL-24-122	Cesium-137	1		<
	Potassium-40	18.7	5.2	
	Ruthenium-106	18.1		<
	Radium-226	1.7	0.7	
	Thorium-232	27.9	1.6	
	Uranium-238	52.2	11	

0959

TABLE F-15B
(Continued)

FEMP ID #	Isotope	Activity (pCi/g)	Uncertainty	Laboratory Qualifier
FMP-SL-24-124	Cesium-137	2.2		<
	Potassium-40	15.1	7.5	
	Radium-226	94.9	2.7	
	Ruthenium-106	17.5		<
	Thorium-232	6.1		<
	Uranium-238	35.1		<
FMP-SL-24-125	Cesium-137	0.7		<
	Potassium-40	7.2	4.8	
	Radium-226	17.1	1.6	
	Ruthenium-106	9		<
	Thorium-232	2.1		<
	Uranium-238	29		<
FMP-SL-24-126D	Cesium-137	1.5		<
	Potassium-40	8.3		<
	Radium-226	14.6	1.1	
	Ruthenium-106	3.4		<
	Thorium-232	4.5		<
	Uranium-238	27.2		<
FMP-SL-24-127	Cesium-137	1.4		<
	Potassium-40	7.4	4.6	
	Radium-226	18.3	1.2	
	Ruthenium-106	10.7		<
	Thorium-232	5		<
	Uranium-238	28.7		<
FMP-SL-24-128QC	Cesium-137	1.7		<
	Potassium-40	5.5	2.7	
	Radium-226	19.2	1.4	
	Ruthenium-106	9.6		<
	Thorium-232	6.1		<
	Uranium-238	16.6		<

0960

TABLE F-15B
(Continued)

FEMP ID #	Isotope	Activity (pCi/g)	Uncertainty	Laboratory Qualifier
FMP-SL-24-130	Cesium-137	1.2		<
	Potassium-40	10.2	3.3	
	Radium-226	14	0.9	
	Ruthenium-106	7.5		<
	Thorium-232	4.7		<
	Uranium-238	14.3		<
FMP-SL-24-131	Cesium-137	0.4		<
	Potassium-40	10.4	3.7	
	Radium-226	6.9	0.7	
	Ruthenium-106	7.5		<
	Thorium-232	3.8		<
	Uranium-238	8.3		<
FMP-SL-24-132QC	Cesium-137	0.7		<
	Potassium-40	9.4	3.3	
	Radium-226	11.5	0.9	
	Ruthenium-106	7.6		<
	Thorium-232	2		<
	Uranium-238	13.7		<
FMP-SL-24-134	Cesium-137	1.2		<
	Potassium-40	11.3	3.9	
	Radium-226	38.6	1.6	
	Ruthenium-106	11.4		<
	Thorium-232	5		<
	Uranium-238	20.9		<
FMP-SL-24-135	Cesium-137	0.7		<
	Potassium-40	10.6	3.4	
	Radium-226	15	1.1	
	Ruthenium-106	6.7		<
	Thorium-232	2.8		<
	Uranium-238	24.7		<

0961

TABLE F-15B
(Continued)

FEMP ID #	Isotope	Activity (pCi/g)	Uncertainty	Laboratory Qualifier
FMP-SL-24-136D	Cesium-137	1		<
	Potassium-40	12.2		<
	Radium-226	19.7	1.2	
	Ruthenium-106	8.2		<
	Thorium-232	2.6		<
	Uranium-238	28.5		<
FMP-SL-24-136QC	Cesium-137	1.4		<
	Potassium-40	8.4		<
	Radium-226	18.2	1.4	
	Ruthenium-106	4.1		<
	Thorium-232	3.8		<
	Uranium-238	26.3		<
FMP-SL-24-141	Cesium-137	1.4		<
	Potassium-40	14.8	4.3	
	Radium-226	1.7		<
	Ruthenium-106	12.3		<
	Thorium-232	32.6	3.9	
	Uranium-238	34		<
FMP-SL-24-143	Cesium-137	2		<
	Potassium-40	17.5		<
	Radium-226	3.6	2.4	
	Ruthenium-106	14		<
	Thorium-232	51.7	6	
	Uranium-238	25.2		<
FMP-SL-24-147	Cesium-137	0.4		<
	Potassium-40	8.9	5	
	Radium-226	12.2	0.8	
	Ruthenium-106	1.7		<
	Thorium-232	1.8	0.6	
	Uranium-238	17.4		<

0962

TABLE F-15B
(Continued)

FEMP ID #	Isotope	Activity (pCi/g)	Uncertainty	Laboratory Qualifier
FMP-SL-24-149	Cesium-137	1		<
	Potassium-40	15.7		<
	Radium-226	8.2	0.9	
	Ruthenium-106	5.7		<
	Thorium-232	2.9		<
	Uranium-238	17		<
FMP-SL-24-150QC	Potassium-40	10.4	2.8	
	Thorium-232	1.9		<
	Cesium-137	0.8		<
	Ruthenium-106	3.5		<
	Radium-226	7.7	0.9	
	Uranium-238	9.2		<
FMP-SL-24-152	Cesium-137	0.8		<
	Potassium-40	14.5		<
	Radium-226	31.5	1.2	
	Ruthenium-106	10.2		<
	Thorium-232	4.4		<
	Uranium-238	14.5		<
FMP-SL-24-153QC	Cesium-137	0.7		<
	Potassium-40	8.7	5.1	
	Radium-226	27.3	1.3	
	Ruthenium-106	10.7		<
	Thorium-232	3.1		<
	Uranium-238	13.6		<
FMP-SL-24-154	Cesium-137	0.4		<
	Potassium-40	7.4	4.9	
	Ruthenium-106	5.1		<
	Radium-226	4.1	0.6	
	Thorium-232	2.6		<
	Uranium-238	8.9		<

TABLE F-15B
(Continued)

FEMP ID #	Isotope	Activity (pCi/g)	Uncertainty	Laboratory Qualifier
FMP-SL-24-155QC	Cesium-137	0.4		<
	Potassium-40	5.3		<
	Radium-226	4	0.5	
	Ruthenium-106	3.7		<
	Thorium-232	1.6		<
	Uranium-238	4	2.8	
FMP-SL-24-157	Cesium-137	0.5		<
	Potassium-40	6.8	2.9	
	Radium-226	9.2	0.9	
	Ruthenium-106	6.6		<
	Thorium-232	2.3	0.7	
	Uranium-238	19.8		<
FMP-SL-24-160	Cesium-137	1.1		<
	Potassium-40	8	3	
	Radium-226	12.5	0.9	
	Ruthenium-106	5.1		<
	Thorium-232	5.3		<
	Uranium-238	15.7		<
FMP-SL-24-161	Cesium-137	0.9		<
	Potassium-40	6.4		<
	Radium-226	12.8	0.9	
	Ruthenium-106	4.5		<
	Thorium-232	3.8		<
	Uranium-238	223		<
FMP-SL-24-163	Cesium-137	0.7		<
	Potassium-40	22.3		<
	Radium-226	15.8	0.9	
	Ruthenium-106	10.5		<
	Thorium-232	4.9		<
	Uranium-238	33.1		<

TABLE F-15B
(Continued)

FEMP ID #	Isotope	Activity (pCi/g)	Uncertainty	Laboratory Qualifier
FMP-SL-24-164	Cesium-137	0.9		<
	Potassium-40	22.7		<
	Radium-226	8.6	0.7	
	Ruthenium-106	8.2		<
	Thorium-232	1.3	0.8	
	Uranium-238	23.5		<
FMP-SL-24-166	Cesium-137	1.3		<
	Potassium-40	9.3	4	
	Radium-226	4.2	0.5	
	Ruthenium-106	5.5		<
	Thorium-232	1.1	0.6	
	Uranium-238	18.1		<
FMP-SL-24-166D	Cesium-137	0.5		<
	Potassium-40	8.8		<
	Radium-226	4	0.6	
	Ruthenium-106	2.8		<
	Thorium-232	3.3		<
	Uranium-238	14		<
FMP-SL-24-168	Cesium-137	0.9		<
	Potassium-40	7.1	2.9	
	Radium-226	4	0.4	
	Ruthenium-106	8.2		<
	Thorium-232	1.7		<
	Uranium-238	10.1		<
FMP-SL-24-169	Cesium-137	0.2		<
	Potassium-40	5		<
	Radium-226	2.6	0.5	
	Ruthenium-106	9.5		<
	Thorium-232	0.3		<
	Uranium-238	16.8		<

0965

TABLE F-15B
(Continued)

FEMP ID #	Isotope	Activity (pCi/g)	Uncertainty	Laboratory Qualifier
FMP-SL-24-171	Cesium-137	1.4		<
	Potassium-40	5.9		<
	Radium-226	10.1	0.8	
	Ruthenium-106	5.2		<
	Thorium-232	2.6		<
	Uranium-238	28.5		<
FMP-SL-24-172	Cesium-137	0.4		<
	Potassium-40	13.5		<
	Radium-226	2.7	0.5	
	Ruthenium-106	3.8		<
	Thorium-232	0.3		<
	Uranium-238	7	4.6	
FMP-SL-24-177	Cesium-137	0.1		<
	Potassium-40	6.4		<
	Radium-226	1.1	0.4	
	Ruthenium-106	8.2		<
	Thorium-232	4.4	0.6	
	Uranium-238	23.1		<
FMP-SL-24-178	Cesium-137	1.8		<
	Potassium-40	5.1	2	
	Radium-226	1.2		<
	Ruthenium-106	12.9		<
	Thorium-232	13.4	0.9	
	Uranium-238	18		<
FMP-SL-24-179	Cesium-137	2.4		<
	Potassium-40	8		<
	Radium-226	4.9		<
	Ruthenium-106	22.9		<
	Thorium-232	57.7	2.1	
	Uranium-238	15		<

TABLE F-15B
(Continued)

FEMP ID #	Isotope	Activity (pCi/g)	Uncertainty	Laboratory Qualifier
FMP-SL-24-181	Cesium-137	0.1		<
	Potassium-40	19.2		<
	Radium-226	1.4		<
	Ruthenium-106	8.1		<
	Thorium-232	1.2	0.5	
	Uranium-238	2.1	1.5	
FMP-SL-24-182	Cesium-137	0.8		<
	Potassium-40	7.1	5	
	Radium-226	1.5		<
	Ruthenium-106	8.6		<
	Thorium-232	4.9	0.5	
	Uranium-238	22.7		<
FMP-SL-24-190	Cesium-137	1.3		<
	Potassium-40	24.4		<
	Radium-226	22.8	1.3	
	Ruthenium-106	7.3		<
	Thorium-232	3.2		<
	Uranium-238	22.5		<
FMP-SL-24-191	Cesium-137	0.8		<
	Potassium-40	27.4		<
	Radium-226	2.9	0.5	
	Ruthenium-106	5.3		<
	Thorium-232	2.7		<
	Uranium-238	17.3	8.9	
FMP-SL-24-192	Cesium-137	4.4		<
	Potassium-40	44.2		<
	Radium-226	266	3.5	
	Ruthenium-106	37.9		<
	Thorium-232	8.5		<
	Uranium-238	70		<

TABLE F-15B
(Continued)

FEMP ID #	Isotope	Activity (pCi/g)	Uncertainty	Laboratory Qualifier
FMP-SL-24-194	Cesium-137	0.7		<
	Potassium-40	8.5	4.2	
	Radium-226	7.1	0.8	
	Ruthenium-106	7.9		<
	Thorium-232	1		<
	Uranium-238	12.1		<
FMP-SL-24-195	Cesium-137	1.1		<
	Potassium-40	10.8	6.1	
	Radium-226	13	0.8	
	Ruthenium-106	8.4		<
	Thorium-232	2		<
	Uranium-238	22.4		<
FMP-SL-24-197	Cesium-137	1.1		<
	Potassium-40	12.1	3.7	
	Radium-226	11.1	0.8	
	Ruthenium-106	4.5		<
	Thorium-232	5.5		<
	Uranium-238	38.2	6.3	
FMP-SL-24-199	Cesium-137	1.9		<
	Potassium-40	11.8	4.6	
	Radium-226	55.5	2	
	Ruthenium-106	13.5		<
	Thorium-232	7.6		<
	Uranium-238	48.1		<
FMP-SL-24-200QC	Cesium-137	1.9		<
	Potassium-40	14.2		<
	Radium-226	44.8	2	
	Ruthenium-106	18.5		<
	Thorium-232	7.3		<
	Uranium-238	42.1		<

TABLE F-15B
(Continued)

FEMP ID #	Isotope	Activity (pCi/g)	Uncertainty	Laboratory Qualifier
FMP-SL-24-202	Cesium-137	0.6		<
	Potassium-40	18.7		<
	Radium-226	0.9	0.5	
	Ruthenium-106	12.2		<
	Thorium-232	9.1	0.8	
	Uranium-238	15.5	8.3	
FMP-SL-24-203	Cesium-137	1.6		<
	Potassium-40	8.2		<
	Radium-226	2.5		<
	Ruthenium-106	8.7		<
	Thorium-232	21.4	1.4	
	Uranium-238	20.6		<
FMP-SL-24-204	Cesium-137	0.9		<
	Potassium-40	12.4	4.6	
	Radium-226	2.4		<
	Ruthenium-106	5.5		<
	Thorium-232	9.5	1	
	Uranium-238	16.3		<
FMP-SL-24-206	Cesium-137	2.5		<
	Potassium-40	11.4		<
	Radium-226	53.3	2.2	
	Ruthenium-106	7.8		<
	Thorium-232	7.9		<
	Uranium-238	28.2		<
FMP-SL-24-206D	Cesium-137	2.1		<
	Potassium-40	17		<
	Radium-226	53.1	2.2	
	Ruthenium-106	19.3		<
	Thorium-232	7.9		<
	Uranium-238	26.5		<

TABLE F-15B
(Continued)

FEMP ID #	Isotope	Activity (pCi/g)	Uncertainty	Laboratory Qualifier
FMP-SL-24-207	Cesium-137	0.7		<
	Potassium-40	12.7	4.3	
	Radium-226	9.2	0.9	
	Ruthenium-106	3.7		<
	Thorium-232	1.3	0.6	
	Uranium-238	12.6		<
FMP-SL-24-222	Cesium-137	0.7		<
	Potassium-40	4	2.3	
	Radium-226	1.4	0.3	
	Ruthenium-106	0.5		<
	Thorium-232	1.2	0.6	
	Uranium-238	39.5	5.6	
FMP-SL-24-228	Cesium-137	0.8		<
	Potassium-40	10.6		<
	Radium-226	10.2	0.9	
	Ruthenium-106	6.7		<
	Thorium-232	2.1	0.9	
	Uranium-238	22.4		<
FMP-SL-24-230	Cesium-137	0.7		<
	Potassium-40	24		<
	Radium-226	10.1	1.1	
	Ruthenium-106	8.5		<
	Thorium-232	2.4		<
	Uranium-238	26.7		<
FMP-SL-24-231QC	Cesium-137	1.3		<
	Potassium-40	31.8		<
	Radium-226	9.8	1.1	
	Ruthenium-106	164		<
	Thorium-232	2.6		<
	Uranium-238	14.7		<

0970

TABLE F-15B
(Continued)

FEMP ID #	Isotope	Activity (pCi/g)	Uncertainty	Laboratory Qualifier
FMP-SL-24-233	Cesium-137	1.6		<
	Potassium-40	21.7		<
	Radium-226	19.7	1.3	
	Ruthenium-106	12.9		<
	Thorium-230	799	214	
	Thorium-232	8.3		<
	Uranium-238	32	12	
FMP-SL-24-234QC	Cesium-137	1.3		<
	Potassium-40	23.5		<
	Radium-226	17.7	1.3	
	Ruthenium-106	11.8		<
	Thorium-230	862	228	
	Thorium-232	3.1		<
	Uranium-238	27.4	10.9	
FMP-SL-24-236	Cesium-137	2.1		<
	Thorium-232	23.5	2	
	Potassium-40	16.5	4.3	
	Ruthenium-106	16.9		<
	Radium-226	18.9	1.6	
	Uranium-238	29.6		<
FMP-SL-24-236D	Cesium-137	2.6		<
	Thorium-232	26	1.6	
	Potassium-40	10.5	4.5	
	Ruthenium-106	12.7		<
	Radium-226	18.1	1.5	
	Uranium-238	29.4	10.2	
FMP-SL-24-239	Cesium-137	1.3		<
	Potassium-40	9.2	3.7	
	Radium-226	7.5	0.7	
	Ruthenium-106	12.6		<
	Thorium-232	9.6	1	
	Uranium-238	20.6		<

TABLE F-15B
(Continued)

FEMP ID #	Isotope	Activity (pCi/g)	Uncertainty	Laboratory Qualifier
FMP-SL-24-240QC	Cesium-137	1.2		<
	Potassium-40	7.2	3.5	
	Radium-226	7.7	0.8	
	Ruthenium-106	8.3		<
	Thorium-232	5.8		<
	Uranium-238	4.8	2.6	
FMP-SL-24-246	Cesium-137	1.3		<
	Potassium-40	7.9	5	
	Radium-226	22.9	1.4	
	Ruthenium-106	11.9		<
	Thorium-232	5.5		<
	Uranium-238	19.4		<
FMP-SL-24-246D	Cesium-137	1.4		<
	Potassium-40	8.1	3.2	
	Radium-226	23.7	1.3	
	Ruthenium-106	13.2		<
	Uranium-238	35		<
FMP-SL-24-247	Cesium-137	2		<
	Potassium-40	14.5	5.3	
	Radium-226	18.8	1.2	
	Ruthenium-106	15		<
	Thorium-232	3.8		<
	Uranium-238	17.2		<
FMP-SL-24-248QC	Cesium-137	1.1		<
	Potassium-40	12.9	5.5	
	Radium-226	27.1	1.4	
	Ruthenium-106	16.7		<
	Thorium-232	4.2		<
	Uranium-238	36.5		<

TABLE F-15B
(Continued)

FEMP ID #	Isotope	Activity (pCi/g)	Uncertainty	Laboratory Qualifier
FMP-SL-24-250	Cesium-137	1.2		<
	Potassium-40	21.4		<
	Radium-226	6.6	0.9	
	Ruthenium-106	15.5		<
	Thorium-232	2.8	0.8	
	Uranium-238	15.3	5.6	
FMP-SL-24-252	Cesium-137	0.7		<
	Potassium-40	10		<
	Radium-226	9	0.9	
	Ruthenium-106	6.9		<
	Thorium-232	1.6		<
	Uranium-238	22.2		<
FMP-SL-24-254	Cesium-137	1.4		<
	Potassium-40	15.6	5	
	Radium-226	24.6	1.4	
	Ruthenium-106	11.1		<
	Thorium-232	2.8		<
	Uranium-238	14.6		<
FMP-SL-24-255	Cesium-137	1.1		<
	Potassium-40	20.7		<
	Radium-226	40.9	1.6	
	Ruthenium-106	14		<
	Thorium-232	2.9		<
	Uranium-238	33.2		<
FMP-SL-24-256D	Cesium-137	1.4		<
	Potassium-40	11.2		<
	Radium-226	32.3	1.5	
	Ruthenium-106	13.8		<
	Thorium-232	3		<
	Uranium-238	28.5		<

TABLE F-15B
(Continued)

FEMP ID #	Isotope	Activity (pCi/g)	Uncertainty	Laboratory Qualifier
FMP-SL-24-256QC	Cesium-137	13		<
	Potassium-40	9.8	3.2	
	Radium-226	32.7	1.5	
	Ruthenium-106	9.5		<
	Thorium-232	6.4		<
	Uranium-238	16.3		<
FMP-SL-24-258	Cesium-137	1.7		<
	Potassium-40	13.1	6.2	
	Radium-226	47.5	1.7	
	Ruthenium-106	13.2		<
	Thorium-232	6.7		<
	Uranium-238	34.4		<
FMP-SL-24-259	Cesium-137	1.3		<
	Potassium-40	14.6	6.8	
	Radium-226	49.1	1.7	
	Ruthenium-106	14		<
	Thorium-232	6.3		<
	Uranium-238	18.5		<
FMP-SL-24-261	Cesium-137	1.6		<
	Potassium-40	17.7		<
	Radium-226	24.5	1.5	
	Ruthenium-106	5.7		<
	Thorium-232	5.9		<
	Uranium-238	15.3		<
FMP-SL-24-262	Cesium-137	1.6		<
	Potassium-40	13.8	6.8	
	Radium-226	67	2.2	
	Ruthenium-106	8.7		<
	Thorium-232	3.5		<
	Uranium-238	39.5		<

0974

TABLE F-15B
(Continued)

FEMP ID #	Isotope	Activity (pCi/g)	Uncertainty	Laboratory Qualifier
FMP-SL-24-263	Cesium-137	2.1		<
	Potassium-40	12.6	5.4	
	Radium-226	84.3	22	
	Ruthenium-106	17.2		<
	Thorium-232	4.8		<
	Uranium-238	24.2		<
FMP-SS-24-001	Cesium-137	0.5	0.2	
	Potassium-40	6.7		<
	Thorium-232	1	0.4	
	Radium-226	1.1		<
	Ruthenium-106	5.5		<
	Uranium-238	27.9	4.7	
FMP-SS-24-002	Cesium-137	0.3		<
	Potassium-40	6.8		<
	Radium-226	1.8	0.6	
	Ruthenium-106	4.1		<
	Thorium-232	2.8		<
	Uranium-238	6.1	3.4	
FMP-SS-24-002D	Cesium-137	0.5	0.2	
	Potassium-40	6.2		<
	Radium-226	2.1	0.8	
	Ruthenium-106	4		<
	Thorium-232	0.9		<
	Uranium-238	6.9	2.7	
FMP-SS-24-006	Cesium-137	0.6	0.5	
	Potassium-40	7.1	3.3	
	Radium-226	1.5	0.7	
	Ruthenium-106	6.2		<
	Thorium-232	9.6	1.1	
	Uranium-238	14.9		<

TABLE F-15B
(Continued)

FEMP ID #	Isotope	Activity (pCi/g)	Uncertainty	Laboratory Qualifier
FMP-SS-24-007	Cesium-137	0.6		<
	Potassium-40	8.9	3.3	
	Radium-226	0.8		<
	Ruthenium-106	6.3		<
	Thorium-232	0.8	0.4	
	Uranium-238	16.5	3.2	
FMP-SS-24-008	Cesium-137	0.7		<
	Potassium-40	7.3	3.9	
	Radium-226	1.8		<
	Ruthenium-106	6.5		<
	Thorium-232	1.4		<
	Uranium-238	30.3	5	
FMP-SS-24-009	Cesium-137	0.9		<
	Potassium-40	17.9		<
	Radium-226	7.9	0.7	
	Ruthenium-106	4		<
	Thorium-232	2.6		<
	Uranium-238	11.5		<
FMP-SS-24-010	Cesium-137	0.1		<
	Potassium-40	9	4	
	Radium-226	2.9	0.7	
	Ruthenium-106	4		<
	Thorium-232	2.9		<
	Uranium-238	16.3		<
FMP-SS-24-011	Cesium-137	0.4		<
	Potassium-40	8.2		<
	Radium-226	7.2	0.9	
	Ruthenium-106	5		<
	Thorium-232	3		<
	Uranium-238	9.5		<

0976

TABLE F-15B
(Continued)

FEMP ID #	Isotope	Activity (pCi/g)	Uncertainty	Laboratory Qualifier
FMP-SS-24-012	Cesium-137	0.8		<
	Potassium-40	6.4	3	
	Radium-226	2.7	0.5	
	Ruthenium-106	4.5		<
	Thorium-232	1.2		<
	Uranium-238	7.8	3.9	
FMP-SS-24-012D	Cesium-137	0.8		<
	Potassium-40	7.8	3.3	
	Radium-226	3	0.5	
	Ruthenium-106	4.5		<
	Thorium-232	0.8	0.5	
	Uranium-238	6.1	3.4	
FMP-SS-24-013	Cesium-137	0.6	0.2	
	Potassium-40	12		<
	Radium-226	1.3		<
	Ruthenium-106	9.8		<
	Thorium-232	0.8	0.5	
	Uranium-238	4.4	2.7	
FMP-SS-24-014	Cesium-137	1.1		<
	Potassium-40	9.5	4	
	Radium-226	1	0.6	
	Ruthenium-106	7.4		<
	Thorium-232	1.4	0.6	
	Uranium-238	6.1	3.2	
FMP-SS-24-015	Cesium-137	0.7		<
	Potassium-40	12.6	4.2	
	Radium-226	5.7	0.7	
	Ruthenium-106	5.8		<
	Thorium-232	1.5		<
	Uranium-238	9.9		<

0977

TABLE F-15B
(Continued)

FEMP ID #	Isotope	Activity (pCi/g)	Uncertainty	Laboratory Qualifier
FMP-SS-24-016	Cesium-137	0.6		<
	Potassium-40	10.7		<
	Radium-226	0.8	0.2	
	Ruthenium-106	0.5		<
	Thorium-232	1	0.5	
	Uranium-238	11.9		<
FMP-SS-24-018	Cesium-137	0.7		<
	Potassium-40	6.7	3.1	
	Radium-226	2.3	0.4	
	Ruthenium-106	6.1		<
	Thorium-232	2.3		<
	Uranium-238	15.2		<
FMP-SS-24-019	Cesium-137	1		<
	Potassium-40	8	3.2	
	Radium-226	2.6	0.6	
	Ruthenium-106	4.4		<
	Thorium-232	1.2	0.8	
	Uranium-238	9.5		<
FMP-SS-24-020	Cesium-137	0.3		<
	Potassium-40	10.8	4.8	
	Radium-226	3.1	0.7	
	Ruthenium-106	5.9		<
	Thorium-232	0.7		<
	Uranium-238	10.7		<
FMP-SS-24-021	Cesium-137	0.5		<
	Potassium-40	6.7	3.2	
	Radium-226	3.3	0.9	
	Ruthenium-106	0.1		<
	Thorium-232	1.3	0.7	
	Uranium-238	9		<

0978

TABLE F-15B
(Continued)

FEMP ID #	Isotope	Activity (pCi/g)	Uncertainty	Laboratory Qualifier
FMP-SS-24-022	Cesium-137	0.5		<
	Potassium-40	9.7	3.8	
	Radium-226	2.4	0.5	
	Ruthenium-106	0.6		<
	Thorium-232	0.3		<
	Uranium-238	16.2		<
FMP-SS-24-022D	Cesium-137	0.4		<
	Potassium-40	9	3.7	
	Radium-226	2.4	0.6	
	Ruthenium-106	7.4		<
	Thorium-232	2.7		<
	Uranium-238	9.1	6.4	
FMP-SS-24-039	Cesium-137	1.4		<
	Potassium-40	14.1	4.8	
	Radium-226	0.9	0.7	
	Ruthenium-106	9.1		<
	Thorium-232	6	2	
	Uranium-238	7.9	3	
FMP-SS-24-043	Cesium-137	0.6	0.3	
	Potassium-40	22.5		<
	Radium-226	6.7	0.7	
	Ruthenium-106	5		<
	Thorium-230	230		<
	Thorium-232	2.2		<
	Uranium-238	30.5		<
FMP-SS-24-046	Cesium-137	1.6		<
	Potassium-40	6.8	3.8	
	Radium-226	23.3	1.2	
	Ruthenium-106	10.1		<
	Thorium-230	505	292	
	Thorium-232	3		<
	Uranium-238	53		<

TABLE F-15B
(Continued)

FEMP ID #	Isotope	Activity (pCi/g)	Uncertainty	Laboratory Qualifier
FMP-SS-24-047	Cesium-137	1.9		<
	Potassium-40	13.4	5.6	
	Radium-226	33.1	1.5	
	Ruthenium-106	8.3		<
	Thorium-230	353	176	
	Thorium-232	4.4		<
	Uranium-238	5.5	3	
FMP-SS-24-050	Cesium-137	1.5		<
	Potassium-40	9.1	5	
	Radium-226	25.9	1.3	
	Ruthenium-106	8.7		<
	Thorium-232	3.9		<
	Thorium-230	594	240	
	Uranium-238	21.1	9.2	
FMP-SS-24-053	Cesium-137	1.5		<
	Potassium-40	6.3	3.1	
	Radium-226	1	0.4	
	Ruthenium-106	6.4		<
	Thorium-230	300		<
	Thorium-232	5	0.8	
	Uranium-238	6.8	3	
FMP-SS-24-057	Cesium-137	0.4	0.2	
	Potassium-40	7.7	3.1	
	Radium-226	2.2	0.5	
	Ruthenium-106	8.2		<
	Thorium-230	330		<
	Thorium-232	0.3		<
	Uranium-238	11.2	4	

TABLE F-15B
(Continued)

FEMP ID #	Isotope	Activity (pCi/g)	Uncertainty	Laboratory Qualifier
FMP-SS-24-060	Cesium-137	0.6	0.3	
	Potassium-40	7.5	3	
	Radium-226	2.3	0.5	
	Ruthenium-106	0.6		<
	Thorium-230	287		<
	Thorium-232	1.6	0.8	
	Uranium-238	8.5	3.1	
FMP-SS-24-064	Cesium-137	0.3	0.2	
	Potassium-40	10.1	3.8	
	Radium-226	2		<
	Ruthenium-106	3.6		<
	Thorium-232	2.1		<
	Uranium-238	58.3	5.7	
FMP-SS-24-066	Cesium-137	0.5	0.2	
	Potassium-40	7	4	
	Radium-226	0.6	0.3	
	Ruthenium-106	2.7		<
	Thorium-232	0.3		<
	Uranium-238	27.4	4	
FMP-SS-24-068	Cesium-137	0.3		<
	Potassium-40	8.8	2.4	
	Radium-226	4.3	0.6	
	Ruthenium-106	9		<
	Thorium-232	1.9	0.7	
	Uranium-238	5		<
FMP-SS-24-070	Cesium-137	0.6		<
	Potassium-40	10.9	3.8	
	Radium-226	2.2	0.4	
	Ruthenium-106	0.5		<
	Thorium-232	1.9		<
	Thorium-230	105	96	
	Uranium-238	15.4		<

TABLE F-15B
(Continued)

FEMP ID #	Isotope	Activity (pCi/g)	Uncertainty	Laboratory Qualifier
FMP-SS-24-072	Cesium-137	0.8		<
	Potassium-40	8.1	3.3	
	Radium-226	2.4	0.6	
	Ruthenium-106	5.7		<
	Thorium-232	2.4	0.5	
	Uranium-238	14.5		<
FMP-SS-24-075	Cesium-137	1.8		<
	Potassium-40	10.3	4.8	
	Radium-226	3.6		<
	Ruthenium-106	13.2		<
	Thorium-232	6.8		<
	Uranium-238	412	26	
FMP-SS-24-075D	Cesium-137	2		<
	Potassium-40	1.4		<
	Radium-226	2.9		<
	Ruthenium-106	17		<
	Thorium-232	5.5		<
	Uranium-238	360	26	
FMP-SS-24-077	Cesium-137	0.5		<
	Potassium-40	7.7		<
	Radium-226	8.3	0.8	
	Ruthenium-106	6.9		<
	Thorium-232	2.4	1	
	Uranium-238	5.3	3.3	
FMP-SS-24-081	Cesium-137	6		<
	Potassium-40	7.6		<
	Radium-226	12.4		<
	Ruthenium-106	57.4		<
	Thorium-232	18		<
	Uranium-238	2180	72	

5174

TABLE F-15B
(Continued)

FEMP ID #	Isotope	Activity (pCi/g)	Uncertainty	Laboratory Qualifier
FMP-SS-24-084	Cesium-137	0.7		<
	Potassium-40	19.1		<
	Radium-226	20.9	1.4	
	Ruthenium-106	8.3		<
	Thorium-232	5.2		<
	Uranium-238	12.2		<
FMP-SS-24-087	Cesium-137	1		<
	Potassium-40	10.2		<
	Radium-226	15.3	1.2	
	Ruthenium-106	8.2		<
	Thorium-232	4.2		<
	Uranium-238	10.2		<
FMP-SS-24-089	Cesium-137	0.7		<
	Potassium-40	11.9		<
	Radium-226	14.5	0.9	
	Ruthenium-106	6.2		<
	Thorium-232	2.4		<
	Uranium-238	18.8		<
FMP-SS-24-092	Cesium-137	0.6	0.4	
	Potassium-40	10.7	3.9	
	Radium-226	4.1	0.6	
	Ruthenium-106	0.5		<
	Thorium-232	2	0.9	
	Uranium-238	7.9		<
FMP-SS-24-093	Cesium-137	1.4		<
	Potassium-40	9.9	4.5	
	Radium-226	42.5	1.8	
	Ruthenium-106	9.4		<
	Thorium-232	4.8		<
	Uranium-238	34.5		<

0983

TABLE F-15B
(Continued)

FEMP ID #	Isotope	Activity (pCi/g)	Uncertainty	Laboratory Qualifier
FMP-SS-24-096	Cesium-137	1.1		<
	Potassium-40	8.3		<
	Radium-226	11.2	1.1	
	Ruthenium-106	11.2		<
	Thorium-232	2		<
	Uranium-238	12.7		<
FMP-SS-24-096D	Cesium-137	1		<
	Potassium-40	11.2		<
	Radium-226	11.6	1.1	
	Ruthenium-106	3.5		<
	Thorium-232	2.3		<
	Uranium-238	13.3		<
FMP-SS-24-099	Cesium-137	0.5		<
	Potassium-40	9.9	3.8	
	Radium-226	5.5	0.7	
	Ruthenium-106	3.4		<
	Thorium-232	3.3		<
	Uranium-238	10.2		<
FMP-SS-24-101	Cesium-137	0.7	0.2	
	Potassium-40	11.1	4.1	
	Radium-226	4.9	0.3	
	Ruthenium-106	3.2		<
	Thorium-232	3.2		<
	Uranium-238	3.7	2.2	
FMP-SS-24-103	Cesium-137	0.5		<
	Potassium-40	7.2	3.2	
	Radium-226	5.1	0.6	
	Ruthenium-106	5.1		<
	Thorium-232	1.7		<
	Uranium-238	8.3		<

TABLE F-15B
(Continued)

FEMP ID #	Isotope	Activity (pCi/g)	Uncertainty	Laboratory Qualifier
FMP-SS-24-106	Cesium-137	0.8		<
	Potassium-40	8		<
	Radium-226	8.8	0.7	
	Ruthenium-106	5.4		<
	Thorium-232	2.8		<
	Uranium-238	10.5		<
FMP-SS-24-106D	Cesium-137	0.4		<
	Potassium-40	10.8	3.7	
	Radium-226	9	0.7	
	Ruthenium-106	6.5		<
	Thorium-232	2.1		<
	Uranium-238	17.7		<
FMP-SS-24-108	Cesium-137	0.5		<
	Potassium-40	8.7	3.6	
	Radium-226	7.1	0.8	
	Ruthenium-106	3.7		<
	Thorium-232	3.7		<
	Uranium-238	16.3		<
FMP-SS-24-112	Cesium-137	3.4		<
	Potassium-40	27.8		<
	Radium-226	76.6	2.8	
	Ruthenium-106	27.8		<
	Thorium-232	4.3		<
	Uranium-238	63.1		<
FMP-SS-24-115	Cesium-137	2		<
	Potassium-40	13		<
	Radium-226	36.9	1.8	
	Ruthenium-106	10.9		<
	Thorium-232	4.1		<
	Uranium-238	12.7	5.6	

TABLE F-15B
(Continued)

FEMP ID #	Isotope	Activity (pCi/g)	Uncertainty	Laboratory Qualifier
FMP-SS-24-120	Cesium-137	0.7		<
	Potassium-40	7.2	3.4	
	Radium-226	2	0.9	
	Ruthenium-106	12.2		<
	Thorium-232	11.9	2.4	
	Uranium-238	32.1	9	
FMP-SS-24-123	Cesium-137	2.9		<
	Potassium-40	29		<
	Radium-226	121	2.7	
	Ruthenium-106	16.5		<
	Thorium-232	5.3		<
	Uranium-238	39.8		<
FMP-SS-24-126	Cesium-137	1.4		<
	Potassium-40	9.5	4.9	
	Radium-226	16.7	0.9	
	Ruthenium-106	4.8		<
	Thorium-232	2.9		<
	Uranium-238	25.9		<
FMP-SS-24-129	Cesium-137	0.6		<
	Potassium-40	8.3	3.2	
	Radium-226	12.6	1	
	Ruthenium-106	4.6		<
	Thorium-232	1.8		<
	Uranium-238	15.2		<
FMP-SS-24-133	Cesium-137	3.7		<
	Potassium-40	18.4		<
	Radium-226	214	4	
	Ruthenium-106	26.5		<
	Thorium-232	10		<
	Uranium-238	50.2		<

5174

TABLE F-15B
(Continued)

FEMP ID #	Isotope	Activity (pCi/g)	Uncertainty	Laboratory Qualifier
FMP-SS-24-140	Cesium-137	0.8		<
	Potassium-40	4.3	3	
	Radium-226	1.1		<
	Ruthenium-106	7.1		<
	Thorium-232	21.1	2.7	
	Uranium-238	20.1		<
FMP-SS-24-142	Cesium-137	2		<
	Potassium-40	15.9	6.2	
	Radium-226	3.1		<
	Ruthenium-106	10.2		<
	Thorium-232	70.2	6	
	Uranium-238	37.3	12	
FMP-SS-24-146	Cesium-137	0.8		<
	Potassium-40	8.1	4.3	
	Radium-226	15.7	1	
	Ruthenium-106	4.3		<
	Thorium-232	0.9		<
	Uranium-238	12.4		<
FMP-SS-24-146D	Cesium-137	0.5		<
	Potassium-40	10.6		<
	Radium-226	16.1	1	
	Ruthenium-106	6.5		<
	Thorium-232	4		<
	Uranium-238	12.7		<
FMP-SS-24-148	Cesium-137	1		<
	Potassium-40	8.2	3.2	
	Radium-226	10.1	0.9	
	Ruthenium-106	6.5		<
	Thorium-232	2.8		<
	Uranium-238	4.5	3.4	

0987

TABLE F-15B
(Continued)

FEMP ID #	Isotope	Activity (pCi/g)	Uncertainty	Laboratory Qualifier
FMP-SS-24-151	Cesium-137	1.3		<
	Potassium-40	10.2	4.9	
	Radium-226	32.1	1.4	
	Ruthenium-106	9.4		<
	Thorium-232	4.5		<
	Uranium-238	27.3		<
FMP-SS-24-156	Cesium-137	0.6	0.3	
	Potassium-40	10.5	3.6	
	Radium-226	6.2	0.7	
	Ruthenium-106	3.3		<
	Thorium-232	2.2	0.8	
	Uranium-238	5.3	2.8	
FMP-SS-24-156D	Cesium-137	0.5		<
	Potassium-40	12	4.1	
	Radium-226	6	0.9	
	Ruthenium-106	15.7		<
	Thorium-232	2.7	0.9	
	Uranium-238	18.5		<
FMP-SS-24-158	Cesium-137	1.5		<
	Potassium-40	9.9	3.5	
	Radium-226	9.8	0.9	
	Ruthenium-106	5.7		<
	Thorium-232	2.4	0.7	
	Uranium-238	36.1		<
FMP-SS-24-159	Cesium-137	0.9		<
	Potassium-40	10.2		<
	Radium-226	10.9	0.9	
	Ruthenium-106	7.5		<
	Thorium-232	2.8		<
	Uranium-238	6.2	4.7	

0988

TABLE F-15B
(Continued)

FEMP ID #	Isotope	Activity (pCi/g)	Uncertainty	Laboratory Qualifier
FMP-SS-24-162	Cesium-137	1.2		<
	Potassium-40	8.3		<
	Radium-226	9.7	0.9	
	Ruthenium-106	7.4		<
	Thorium-232	2.1		<
	Uranium-238	15.9		<
FMP-SS-24-165	Cesium-137	1.3		<
	Potassium-40	8.5	3.5	
	Radium-226	10	0.9	
	Ruthenium-106	5.7		<
	Thorium-232	1.2	0.5	
	Uranium-238	25.7		<
FMP-SS-24-167	Cesium-137	0.6		<
	Potassium-40	12.2	4.3	
	Radium-226	4.2	0.6	
	Ruthenium-106	4.1		<
	Thorium-232	0.9	0.4	
	Uranium-238	12.4		<
FMP-SS-24-170	Cesium-137	1.6		<
	Potassium-40	6.7	2.3	
	Radium-226	14.5	1.1	
	Ruthenium-106	2.6		<
	Thorium-232	11		<
	Uranium-238	12.2		<
FMP-SS-24-173	Cesium-137	1.7		<
	Potassium-40	15.8		<
	Radium-226	1	0.6	
	Ruthenium-106	20.6		<
	Thorium-232	6.3	2.5	
	Uranium-238	18.7	5.8	

TABLE F-15B
(Continued)

FEMP ID #	Isotope	Activity (pCi/g)	Uncertainty	Laboratory Qualifier
FMP-SS-24-176	Cesium-137	1.1		<
	Potassium-40	7.7	3.3	
	Radium-226	0.8	0.3	
	Ruthenium-106	5.9		<
	Thorium-232	3.1	0.5	
	Uranium-238	8.9	3.6	
FMP-SS-24-176D	Cesium-137	0.4		<
	Potassium-40	5.4		<
	Radium-226	0.6	0.4	
	Ruthenium-106	5.9		<
	Thorium-232	3	0.6	
	Uranium-238	5.2	4	
FMP-SS-24-180	Cesium-137	0.1		<
	Potassium-40	17.8		<
	Radium-226	0.6	0.4	
	Ruthenium-106	8		<
	Thorium-232	2.9	0.5	
	Uranium-238	11.8		<
FMP-SS-24-183	Cesium-137	1.2		<
	Potassium-40	9.4	3.7	
	Radium-226	4.2		<
	Ruthenium-106	21.9		<
	Thorium-232	22.9	1.3	
	Uranium-238	43.3		<
FMP-SS-24-185	Cesium-137	1.1		<
	Potassium-40	7.5	3	
	Radium-226	1	0.7	
	Ruthenium-106	12.3		<
	Thorium-232	0.6	0.3	
	Uranium-238	7.5	4.6	

0990

5174

TABLE F-15B
(Continued)

FEMP ID #	Isotope	Activity (pCi/g)	Uncertainty	Laboratory Qualifier
FMP-SS-24-189	Cesium-137	1.1		<
	Potassium-40	14.7		<
	Radium-226	32.3	1.5	
	Ruthenium-106	10.7		<
	Thorium-232	8.6		<
	Uranium-238	27.4		<
FMP-SS-24-193	Cesium-137	1.2		<
	Potassium-40	19.9		<
	Radium-226	10.8	0.8	
	Ruthenium-106	9.7		<
	Thorium-232	4.3		<
	Uranium-238	14.3		<
FMP-SS-24-196	Cesium-137	1.6		<
	Potassium-40	19.9		<
	Radium-226	22.1	1.3	
	Ruthenium-106	9.2		<
	Thorium-232	2.9		<
	Uranium-238	44.4	9.5	
FMP-SS-24-196D	Cesium-137	1.1		<
	Potassium-40	9.6		<
	Radium-226	21.9	1.2	
	Ruthenium-106	8.4		<
	Thorium-232	2.4		<
	Uranium-238	52.4	8.8	
FMP-SS-24-198	Cesium-137	1.3		<
	Potassium-40	15.9	4.2	
	Radium-226	26.9	1.3	
	Ruthenium-106	11.1		<
	Thorium-232	3.5		<
	Uranium-238	18.3		<

0991

TABLE F-15B
(Continued)

FEMP ID #	Isotope	Activity (pCi/g)	Uncertainty	Laboratory Qualifier
FMP-SS-24-201	Cesium-137	0.5	0.3	
	Potassium-40	10.2	4.3	
	Radium-226	1.5	0.5	
	Ruthenium-106	11.7		<
	Thorium-232	4.8	0.8	
	Uranium-238	5.8		<
FMP-SS-24-205	Cesium-137	1.5		<
	Potassium-40	11.6	4.2	
	Radium-226	14.2	1.1	
	Ruthenium-106	5.9		<
	Thorium-232	2.4		<
	Uranium-238	15.6		<
FMP-SS-24-208	Cesium-137	0.7		<
	Potassium-40	12.1		<
	Radium-226	1.2	0.5	
	Ruthenium-106	4.7		<
	Thorium-232	2.8		<
	Uranium-238	23.3	4.9	
FMP-SS-24-209	Cesium-137	0.3		<
	Potassium-40	8.5		<
	Radium-226	1.9	0.4	
	Ruthenium-106	5		<
	Thorium-232	0.9	0.6	
	Uranium-238	10.8		<
FMP-SS-24-210	Cesium-137	0.1		<
	Potassium-40	11	4.2	
	Radium-226	0.9	0.5	
	Ruthenium-106	5.5		<
	Thorium-232	1.1	0.4	
	Uranium-238	6	2.3	

0992

TABLE F-15B
(Continued)

FEMP ID #	Isotope	Activity (pCi/g)	Uncertainty	Laboratory Qualifier
FMP-SS-24-211	Cesium-137	0.3		<
	Potassium-40	13.4	6.7	
	Radium-226	1.2	0.5	
	Ruthenium-106	6.4		<
	Thorium-232	0.8	0.7	
	Uranium-238	39	6	
FMP-SS-24-212	Cesium-137	0.5		<
	Potassium-40	0.9		<
	Radium-226	0.6	0.3	
	Ruthenium-106	0.5		<
	Thorium-232	2.3		<
	Uranium-238	51.6	6.3	
FMP-SS-24-220	Cesium-137	0.8		<
	Potassium-40	6.6	3.1	
	Radium-226	0.5	0.3	
	Ruthenium-106	0.5		<
	Thorium-232	0.3		<
	Uranium-238	17.5	4.6	
FMP-SS-24-221	Cesium-137	0.6		<
	Potassium-40	5	2.6	
	Radium-226	1.2	0.6	
	Ruthenium-106	6.8		<
	Thorium-232	0.9	0.6	
	Uranium-238	72.9	7.5	
FMP-SS-24-223	Cesium-137	0.6	0.4	
	Potassium-40	23.5		<
	Radium-226	0.9	0.6	
	Ruthenium-106	9.1		<
	Thorium-232	5.7		<
	Uranium-238	42.4	5.4	

5174

TABLE F-15B
(Continued)

FEMP ID #	Isotope	Activity (pCi/g)	Uncertainty	Laboratory Qualifier
FMP-SS-24-229	Cesium-137	1.7		<
	Potassium-40	18		<
	Radium-226	23.9	1.6	
	Ruthenium-106	13.6		<
	Thorium-232	7.6		<
	Uranium-238	13.2		<
FMP-SS-24-232	Cesium-137	1		<
	Potassium-40	29.4		<
	Radium-226	12.2	0.7	
	Ruthenium-106	3.9		<
	Thorium-230	161	135	
	Thorium-232	5.6		<
	Uranium-238	13.3	4.6	
FMP-SS-24-235	Cesium-137	2.1		<
	Potassium-40	13.9		<
	Radium-226	12.5	1.5	
	Ruthenium-106	16.4		<
	Thorium-232	19.1	2	
	Uranium-238	28.8	10.1	
FMP-SS-24-237	Cesium-137	1.9		<
	Potassium-40	10.4	4.3	
	Radium-226	10.5	1.2	
	Ruthenium-106	12.8		<
	Thorium-232	2.7		<
	Uranium-238	31		<
FMP-SS-24-238	Cesium-137	0.5		<
	Potassium-40	22.6		<
	Radium-226	10.7	1.1	
	Ruthenium-106	9		<
	Thorium-232	4.5		<
	Uranium-238	20.4		<

0994

TABLE F-15B
(Continued)

FEMP ID #	Isotope	Activity (pCi/g)	Uncertainty	Laboratory Qualifier
FMP-SS-24-243	Cesium-137	0.5		<
	Potassium-40	16.4	3.1	
	Radium-226	2.3	0.7	
	Ruthenium-106	3.3		<
	Thorium-232	0.4		<
	Uranium-238	19.2		<
FMP-SS-24-244	Cesium-137	2		<
	Potassium-40	1.6		<
	Radium-226	16.9	1.2	
	Ruthenium-106	130		<
	Thorium-232	0.6		<
	Uranium-238	14.9		<
FMP-SS-24-245	Cesium-137	1		<
	Potassium-40	11.1	4.4	
	Radium-226	13.5	1.1	
	Ruthenium-106	10.2		<
	Thorium-232	3.5		<
	Uranium-238	23.7		<
FMP-SS-24-249	Cesium-137	1.3		<
	Potassium-40	11.1	4.4	
	Radium-226	9.8	0.8	
	Ruthenium-106	6		<
	Thorium-232	2.5	0.7	
	Uranium-238	20.2	3.8	
FMP-SS-24-251	Cesium-137	1.8		<
	Potassium-40	21.9		<
	Radium-226	10.8	1	
	Ruthenium-106	6.1		<
	Thorium-232	3.3		<
	Uranium-238	27.4		<

0995

TABLE F-15B
(Continued)

FEMP ID #	Isotope	Activity (pCi/g)	Uncertainty	Laboratory Qualifier
FMP-SS-24-253	Cesium-137	2		<
	Potassium-40	12.3	4.9	
	Radium-226	26.3	1.5	
	Ruthenium-106	13.3		<
	Thorium-232	3.3		<
	Uranium-238	21.9		<
FMP-SS-24-257	Cesium-137	1.7		<
	Potassium-40	17.1	5.7	
	Radium-226	55.5	2	
	Ruthenium-106	15.5		<
	Thorium-232	4.3		<
	Uranium-238	35.1		<
FMP-SS-24-260	Cesium-137	0.7		<
	Potassium-40	9.9	4.2	
	Radium-226	11.6	0.9	
	Ruthenium-106	4.1		<
	Thorium-232	2.7		<
	Uranium-238	19.5		<

0996

5174

TABLE F-15C

SOUTH FIELD
CIS FIDLER SURFACE READINGS
OPERABLE UNIT 2 REMEDIAL INVESTIGATION
FERNALD ENVIRONMENTAL MANAGEMENT PROJECT

Coordinates		
North	East	Reading (CPM)
478051.41	1379100.00	18359.00
478057.66	1379100.13	14355.00
478063.91	1379100.38	13044.00
478063.91	1379100.38	5927.00
477863.81	1379101.13	12025.00
477870.06	1379101.25	11905.00
477876.31	1379101.50	11812.00
477882.56	1379101.63	12171.00
477888.81	1379101.75	9494.00
478113.91	1379101.75	5247.00
478163.88	1379103.13	12475.00
478163.88	1379103.13	5802.00
478170.13	1379103.25	11112.00
478176.38	1379103.38	9928.00
478182.63	1379103.63	8449.00
478188.88	1379103.75	10292.00
478195.13	1379104.00	10191.00
478201.38	1379104.13	13606.00
477988.78	1379104.50	17752.00
477995.03	1379104.75	22046.00
478001.28	1379104.88	18182.00
478007.53	1379105.00	18439.00
478013.75	1379105.25	15076.00
478020.00	1379105.38	10409.00
478026.25	1379105.63	12527.00
478032.50	1379105.75	14493.00
478038.75	1379105.88	21908.00
478045.00	1379106.13	18819.00
478051.25	1379106.25	18182.00
478057.50	1379106.38	14185.00
478063.75	1379106.63	12686.00
477863.66	1379107.38	10017.00
477869.91	1379107.50	11236.00
477876.16	1379107.75	12606.00
477886.63	1379108.00	11174.00
478163.72	1379109.38	11386.00
478169.97	1379109.50	9203.00
478176.22	1379109.63	10249.00
478182.44	1379109.88	12097.00
478188.69	1379110.00	12712.00

8997

TABLE F-15C
(Continued)

Coordinates		
North	East	Reading (CPM)
478194.94	1379110.25	14928.00
477988.59	1379110.75	16760.00
477994.84	1379111.00	22916.00
478001.09	1379111.13	17965.00
478007.34	1379111.25	20306.00
478013.59	1379111.50	20271.00
478019.84	1379111.63	13794.00
478026.09	1379111.88	14286.00
478032.34	1379112.00	22223.00
478038.59	1379112.13	20067.00
478044.84	1379112.38	26432.00
478051.09	1379112.50	19803.00
478057.31	1379112.63	13762.00
478063.56	1379112.88	13857.00
477863.47	1379113.63	10850.00
477869.72	1379113.75	12171.00
477875.97	1379114.00	14926.00
477882.22	1379114.13	13954.00
477888.47	1379114.25	10668.00
478163.53	1379115.63	11112.00
478169.78	1379115.75	8747.00
478176.03	1379115.88	10564.00
478182.28	1379116.13	11010.00
478188.53	1379116.25	12606.00
477988.44	1379117.00	20271.00
477994.69	1379117.25	24591.00
478000.94	1379117.38	34882.00
478007.19	1379117.50	45803.00
478013.44	1379117.75	1878.00
478019.66	1379117.88	21583.00
478025.91	1379118.13	23256.00
478032.16	1379118.25	27150.00
478038.41	1379118.38	29851.00
478044.66	1379118.63	21740.00
478050.91	1379118.75	17000.00
478057.16	1379118.88	17143.00
478063.41	1379119.13	13353.00
477863.31	1379119.88	9601.00
477869.56	1679120.00	11905.00
477875.81	1379120.25	12073.00
477882.06	1379120.38	12475.00
477888.31	1379120.50	11112.00
478163.38	1379121.88	11696.00
478169.63	1379122.00	10034.00

0998

5174

TABLE F-15C
(Continued)

Coordinates		
North	East	Reading (CPM)
478175.88	1379122.13	12146.00
478182.09	1379122.38	10417.00
478188.34	1379122.50	13730.00
477988.25	1379123.25	21908.00
477994.50	1379123.50	28197.00
478000.75	1379123.63	52244.00
478007.00	1379123.75	109900.00
478013.25	1379124.00	38721.00
478019.50	1379124.13	34685.00
478025.75	1379124.38	32978.00
478032.00	1379124.50	64730.00
478038.25	1379124.63	27273.00
478044.50	1379124.88	26786.00
478050.75	1379125.00	19428.00
478057.00	1379125.13	16359.00
478063.22	1379125.38	13187.00
478163.19	1379128.13	10979.00
478169.44	1379128.25	10409.00
478175.69	1379128.38	12553.00
478181.94	1379128.63	11868.00
478188.19	1379128.75	13246.00
477988.09	1379129.50	24490.00
477994.34	1379129.75	61860.00
478000.59	1379129.88	56759.00
478006.84	1379130.00	208340.00
478013.09	1379130.25	192310.00
478019.31	1379130.38	56088.00
478025.56	1379130.63	46876.00
478031.81	1379130.75	66230.00
478038.06	1379130.88	48398.00
478044.31	1379131.13	20980.00
478050.56	1379131.25	15464.00
478056.81	1379131.38	13168.00
478063.06	1379131.63	13514.00
477987.91	1379135.75	35140.00
477994.16	1379136.00	47620.00
478000.41	1379136.13	42563.00
478006.66	1379136.25	98690.00
478012.91	1379136.50	24190.00
478019.16	1379136.63	98910.00
478025.41	1379136.75	41096.00
478031.66	1379137.00	114800.00
478037.91	1379137.13	61370.00
478044.16	1379137.38	24692.00

TABLE F-15C
(Continued)

Coordinates		
North	East	Reading (CPM)
478050.41	1379137.50	13575.00
478056.66	1379137.63	14743.00
478062.88	1379137.88	12821.00
477712.69	1379140.75	4632.00
477987.75	1379142.00	30587.00
477762.66	1379142.13	4129.00
477994.00	1379142.25	38462.00
478000.25	1379142.38	40001.00
478006.50	1379142.50	51725.00
478012.75	1379142.75	64240.00
478019.00	1379142.88	226420.00
478025.22	1379143.00	200670.00
478031.47	1379143.25	21127.00
478037.72	1379143.38	24897.00
478043.97	1379143.63	20135.00
478050.22	1379143.75	17805.00
478056.47	1379143.88	11977.00
478062.72	1379144.13	13514.00
477862.63	1379144.88	5551.00
477912.59	1379146.25	4001.00
477962.59	1379147.63	5474.00
477987.56	1379148.25	29127.00
477993.81	1379148.50	43166.00
478000.06	1379148.63	39474.00
478006.31	1379148.75	51674.00
478012.56	1379149.00	37858.00
478012.56	1379149.00	64730.00
478013.81	1379149.13	90370.00
478025.06	1379149.25	61290.00
478031.31	1379149.50	26907.00
478037.56	1379149.63	10518.00
478043.81	1379149.88	15585.00
478050.06	1379150.00	13922.00
478056.31	1379150.13	10850.00
478062.56	1379150.38	13484.00
478062.56	1379150.38	6494.00
478068.78	1379150.50	13545.00
478075.03	1379150.63	10870.00
478081.28	1379150.88	12397.00
478087.53	1379151.00	13575.00
478093.78	1379151.13	13678.00
478100.03	1379151.38	11674.00
478106.28	1379151.50	13044.00
478112.53	1379151.75	11300.00

TABLE F-15C
(Continued)

Coordinates		
North	East	Reading (CPM)
478112.53	1379151.75	5755.00
478162.50	1379153.13	5422.00
477987.41	1379154.50	25899.00
477993.66	1379154.75	30938.00
477999.91	1379154.88	33008.00
478006.16	1379155.00	71360.00
478012.41	1379155.25	34883.00
478018.66	1379155.38	67210.00
478024.91	1379155.50	12459.00
478031.13	1379155.75	15626.00
478037.38	1379155.88	22819.00
478037.38	1379155.88	16950.00
478043.63	1379156.13	14706.00
478049.88	1379156.25	12475.00
478056.13	1379156.38	10939.00
478062.38	1379156.63	13423.00
478068.63	1379156.75	14635.00
478074.88	1379156.88	12423.00
478081.13	1379157.13	23256.00
478087.38	1379157.25	14564.00
478093.63	1379157.38	12059.00
478099.88	1379157.63	11953.00
478106.13	1379157.75	11321.00
478112.34	1379158.00	12124.00
477987.25	1379160.75	20980.00
477993.47	1379161.00	23427.00
477999.72	1379161.13	46137.00
478005.97	1379161.25	24591.00
478012.22	1379161.50	37048.00
478018.47	1379161.63	12606.00
478024.72	1379161.75	11549.00
478030.97	1379162.00	13606.00
478037.22	1379162.13	15307.00
478037.22	1379162.13	16130.00
478043.47	1379162.38	13608.00
478049.72	1379162.50	12821.00
478055.97	1379162.63	14538.00
478062.22	1379162.88	12372.00
478068.47	1379163.00	13216.00
478074.69	1379163.13	12146.00
478080.94	1379163.38	19618.00
478087.19	1379163.50	23716.00
478093.44	1379163.63	10564.00
478099.69	1379163.88	12146.00

TABLE F-15C
(Continued)

Coordinates		
North	East	Reading (CPM)
478105.94	1379164.00	11112.00
478112.19	1379164.25	10622.00
477987.06	1379167.00	15545.00
477993.31	1379167.25	16086.00
477999.58	1379167.38	20388.00
478005.81	1379167.50	22642.00
478012.06	1379167.75	17544.00
478018.31	1379167.88	13545.00
478024.56	1379168.00	12220.00
478030.81	1379168.25	13101.00
478037.03	1379168.38	13216.00
478037.03	1379168.38	17342.00
478043.28	1379168.50	13730.00
478049.53	1379168.75	11407.00
478055.78	1379168.88	11517.00
477836.94	1379169.13	11439.00
478062.03	1379169.13	13246.00
478068.28	1379169.25	13016.00
477843.19	1379139.38	12459.00
478074.53	1379169.38	11091.00
477849.44	1379169.50	11153.00
477855.69	137169.63	8311.00
478080.78	1379169.63	15874.00
478087.03	1379169.75	23077.00
477861.94	1379169.88	11765.00
478093.28	1379169.88	10170.00
477868.19	1379170.00	10620.00
478099.53	1379170.13	11742.00
477874.44	1379170.25	10222.00
478105.78	1379170.25	11195.00
477880.69	1379170.38	12146.00
477886.94	1379170.50	14185.00
478112.03	1379170.50	11868.00
477893.19	1379170.75	11638.00
477899.44	1379170.88	11343.00
477905.69	1379171.00	9757.00
477911.91	1379171.25	9147.00
477986.91	1379173.25	20419.00
477993.13	1379173.50	20001.00
477999.38	1379173.63	22901.00
478005.63	1379173.75	22141.00
478011.88	1379174.00	15707.00
478018.13	1379174.13	14424.00
478024.38	1379174.25	21583.00

TABLE F-15C
(Continued)

Coordinates		
North	East	Reading (CPM)
478030.63	1379174.50	14355.00
478036.88	1379174.63	14320.00
478036.88	1379174.63	15190.00
478043.13	1379174.75	17008.00
478049.38	1379175.00	15832.00
478055.63	1379175.13	14252.00
477836.78	1379175.38	11696.00
478061.88	1379175.38	11835.00
478068.13	1379175.50	15239.00
477843.03	1379175.63	9405.00
478074.38	1379175.63	10890.00
477849.28	1379175.75	10753.00
477855.53	1379175.88	10129.00
478080.59	1379175.88	8669.00
478086.84	1379176.00	14635.00
477861.78	1379176.03	9984.00
478093.09	1379173.13	11451.00
478099.34	1379176.38	11561.00
477874.25	1379176.50	9741.00
478105.59	1379176.50	11905.00
477880.50	1379176.63	11549.00
477886.75	1379176.75	14926.00
478111.84	1379176.75	12262.00
477893.00	1379177.00	11050.00
477899.25	1379177.13	14670.00
477905.50	1379187.25	10102.00
477911.75	1379177.50	10696.00
477836.59	1379181.63	9837.00
478061.69	1379181.63	13514.00
478067.94	1379181.75	12122.00
477842.84	1379181.88	9853.00
478074.19	1379181.88	12794.00
477849.09	1379182.00	11905.00
478080.44	1379182.13	8043.00
477861.59	1379182.38	10453.00
478086.69	1379182.25	12321.00
478092.94	1379182.38	11899.00
478092.94	1379182.38	11899.00
477867.84	1379182.50	10990.00
478099.19	1379182.63	12059.00
477874.09	1379182.75	8903.00
478105.44	1379182.75	12321.00
477880.34	1379182.88	9231.00
477886.59	1379183.00	13334.00

TABLE F-15C
(Continued)

Coordinates		
North	East	Reading (CPM)
470111.69	1379183.00	10527.00
477892.84	1379183.25	14670.00
477899.09	1379183.38	10257.00
477905.34	1379183.50	10649.00
477911.59	1379183.75	10187.00
477836.44	1379187.88	12296.00
478061.53	1379187.88	11549.00
478067.78	1379188.00	14538.00
477842.69	1379188.13	8646.00
478074.03	1379188.13	11725.00
477848.94	1379188.25	15239.00
477855.19	1379188.38	9434.00
478080.25	1379188.38	8903.00
478086.50	1379188.50	8558.00
477861.44	1379188.63	11868.00
478097.75	1379188.63	10435.00
477867.69	1379188.75	9133.00
477873.91	1379188.88	9637.00
478099.00	1379188.88	11174.00
478105.25	1379189.00	13339.00
477880.16	1379189.13	11765.00
478111.50	1379189.13	10935.00
477886.41	1379189.25	14252.00
477892.66	1379189.50	13393.00
477898.91	1379189.63	11729.00
477905.16	1379189.75	10890.00
477911.41	1379190.00	10257.00
478061.34	1379194.13	12171.00
478067.59	1379194.25	15307.00
478073.84	1379194.38	13922.00
478080.09	1379194.63	9459.00
478086.34	1379194.75	9494.00
478092.59	1379194.88	10677.00
478098.84	1379195.13	13044.00
478105.09	1379195.25	11729.00
478111.34	1379195.38	112616.00
477886.25	1379195.50	18217.00
477892.50	1379195.75	20135.00
477898.75	1379195.88	11742.00
477905.00	1379196.00	10490.00
477911.25	1379196.25	10381.00
477911.25	1379196.25	5035.00
477961.22	1379197.63	5033.00
478061.19	1379200.38	12001.00

TABLE F-15C
(Continued)

Coordinates		
North	East	Reading (CPM)
478061.19	1379200.38	5699.00
478067.44	1379200.50	15114.00
478073.69	1379200.63	14151.00
478079.94	1379200.88	11195.00
478086.16	1379201.00	10564.00
478092.41	1379201.13	13762.00
478098.66	1379201.38	15759.00
478104.91	1379201.50	13216.00
478111.16	1379201.63	11953.00
478111.16	1379201.63	5712.00
477886.06	1379201.75	29279.00
477892.31	1379202.00	33334.00
477898.56	1379202.13	11651.00
477904.81	1379202.25	10363.00
477911.06	1379202.50	8979.00
478061.00	1379206.50	11071.00
478067.25	1379206.75	13484.00
478073.50	1379206.88	11674.00
478079.75	1379207.13	10850.00
478086.00	1379207.25	16950.00
478092.25	1379207.38	18878.00
478098.50	1379207.63	12001.00
478104.75	1379207.75	11696.00
478111.00	1379207.88	10620.00
477885.91	1379208.00	39736.00
477892.16	1379208.25	11742.00
477898.41	1379208.38	11868.00
477904.66	1379208.50	9885.00
477910.91	1379208.75	11561.00
478067.09	1379213.00	13393.00
478073.34	1379213.13	13637.00
478079.59	1379213.38	11577.00
478085.84	1379213.50	12632.00
478092.06	1379213.63	17868.00
478098.31	1379213.88	12772.00
478110.81	1379214.13	11696.00
477885.72	1379214.25	17095.00
477891.97	1379214.50	11729.00
477898.22	1379214.63	10773.00
477904.47	1379214.75	11343.00
477910.72	1379215.00	9631.00
478060.66	1379219.00	11584.00
478066.91	1379219.25	12146.00
478073.16	1379219.38	13730.00

TABLE F-15C
(Continued)

Coordinates		
North	East	Reading (CPM)
478079.41	1379219.63	10545.00
478085.66	1379219.75	15307.00
478091.91	1379219.88	18405.00
478098.16	1379220.13	9934.00
478104.41	1379220.25	11905.00
478110.66	1379220.38	11289.00
477885.56	1379220.50	11905.00
477891.81	1379220.63	10912.00
477898.06	1379220.88	10249.00
477904.31	1379221.00	10129.00
477910.56	1379221.25	10017.00
478060.50	1379225.25	10677.00
478066.75	1379225.50	11606.00
478073.00	1379225.63	10601.00
478079.25	1379225.88	9837.00
478085.50	1379226.00	20135.00
477860.41	1379226.13	16359.00
478091.75	1379226.13	113430.00
477866.66	1379226.25	15114.00
477872.91	1379226.38	17095.00
478097.97	1379226.38	10345.00
478104.22	1379226.50	11796.00
477879.16	1379226.63	15425.00
478110.47	1379226.63	11289.00
477885.41	1379226.75	13987.00
478060.31	1379231.50	10715.00
477835.25	1379231.63	15278.00
478066.56	1379231.75	10129.00
477841.50	1379231.88	12527.00
478072.81	1379231.88	14320.00
477847.72	1379232.00	19803.00
477853.97	1379232.13	15190.00
478079.06	1379232.13	9984.00
478085.31	1379232.25	18634.00
477860.22	1379232.38	20558.00
478091.56	1379232.38	14320.00
477866.47	1379232.50	11651.00
477872.72	1379232.63	16086.00
478097.81	1379232.63	10518.00
478104.06	1379232.75	11765.00
477878.97	1379232.88	8427.00
478110.31	1379232.88	10583.00
477885.22	1379233.00	13678.00
477835.06	1379237.88	13453.00

1006

TABLE F-15C
(Continued)

Coordinates		
North	East	Reading (CPM)
477841.31	1379238.00	15152.00
478066.41	1379238.00	10102.00
478072.66	1379238.13	12270.00
477847.56	1379238.25	14743.00
478078.91	1379238.25	11174.00
477853.81	1379238.38	17046.00
478085.16	1379238.50	8979.00
477860.06	1379238.63	15152.00
478091.41	1379238.63	12589.00
477866.31	1379238.75	19934.00
477872.56	1379238.88	14399.00
478097.63	1379238.88	10129.00
478103.88	1379239.00	12527.00
477878.814	1379239.13	20762.00
478110.13	1379239.13	10345.00
477885.06	1379239.25	11953.00
477809.91	1379243.50	5907.00
478059.97	1379244.00	9741.00
477834.91	1379244.13	13730.00
477841.16	1379244.25	12632.00
478066.22	1379244.25	12321.00
478072.47	1379244.38	12632.00
477847.41	1379244.50	12346.00
478078.72	1379244.50	11882.00
477853.63	1379244.63	12459.00
478084.97	1379244.75	13857.00
477859.88	1379244.88	13423.00
477859.88	1379244.88	6515.00
478091.22	1379244.88	9390.00
477866.13	1379245.00	14609.00
477872.38	1379245.13	14926.00
478097.47	1379245.13	8808.00
478103.72	1379245.25	9346.00
478109.97	1379245.38	13794.00
478109.97	1379245.38	9555.300
477884.88	1379245.50	12097.00
477909.88	1379246.25	4712.00
477959.84	1379247.50	5107.00
477959.84	1379247.50	10753.00
477966.09	1379247.75	11633.00
477972.34	1379247.88	11812.00
477978.59	1379248.13	12196.00
477984.84	1379248.25	134533.00
478009.84	1379248.88	7308.00

1007

TABLE F-15C
(Continued)

Coordinates		
North	East	Reading (CPM)
478059.81	1379250.25	4717.00
478059.81	1379250.25	9050.00
478066.06	1379250.50	14286.00
478072.31	1379250.63	13857.00
478078.56	1379250.75	12196.00
478084.81	1379251.00	12025.00
478091.06	1379251.13	11549.00
478097.31	1379251.38	9464.00
478103.53	1379251.50	8560.00
478109.78	1379251.63	8506.00
478109.78	1379251.63	1673.00
477959.69	1379253.75	10170.00
477965.94	1379254.00	10453.00
477972.19	1379254.13	11075.00
477978.44	1379254.38	13334.00
477984.66	1379254.50	15176.00
478084.63	1379257.25	9928.00
478090.88	1379257.38	14320.00
478097.13	1379257.63	9804.00
478103.38	1379257.75	8979.00
478109.63	1379257.88	10102.00
477959.50	1379260.00	10205.00
477965.75	1379260.25	12001.00
477972.00	1379260.38	13514.00
477978.25	1379260.63	15385.00
477984.50	1379260.75	16484.00
478084.47	1379263.50	9570.00
478090.72	1379263.63	25211.00
478096.97	1379263.88	18938.00
478103.22	1379264.00	11300.00
478109.44	1379264.13	11407.00
477959.34	1379266.25	10102.00
477965.59	1379266.50	10310.00
477971.84	1379266.63	12965.00
477978.09	1379266.88	14229.00
477984.31	1379267.00	14507.00
478084.28	1379269.75	10959.00
478090.53	1379269.88	10338.00
478096.78	1379270.13	10222.00
478103.03	1379270.25	10729.00
478109.28	1379270.38	10564.00
477959.16	1379272.50	10470.00
477965.41	1379272.75	12995.00
477971.66	1379272.88	14706.00

5174

TABLE F-15C
(Continued)

Coordinates		
North	East	Reading (CPM)
477977.91	1379273.00	40541.00
477984.16	1379273.25	18437.00
477984.16	1379273.25	20558.00
477990.41	1379273.38	14355.00
477996.66	1379273.63	11815.00
478002.91	1379273.75	13393.00
478009.16	1379273.88	10453.00
478015.41	1379274.13	12025.00
477108.81	1379274.25	2829.00
478021.66	1379274.25	12876.00
478027.88	1379274.38	13155.00
478034.13	1379274.63	15790.00
478040.38	1379274.75	13044.00
478046.63	1379275.00	14152.00
478052.88	1379275.13	13216.00
478059.13	1379275.25	12146.00
477158.78	1379275.63	4671.00
478084.13	1379276.00	16217.00
478090.38	1379276.13	13762.00
478096.63	1379276.25	12669.00
478102.88	1379276.50	10734.00
478190.13	1379276.63	11495.00
477959.00	1379278.75	9879.00
477965.25	1379279.00	11765.00
477971.50	1379279.13	15964.00
477977.75	1379279.25	15001.00
477984.00	1379279.50	11495.00
477990.22	1379279.63	12001.00
477308.72	1379279.75	6608.00
477996.47	1379279.88	11996.00
478002.72	1379280.00	10990.00
478008.97	1379280.13	10153.00
478015.22	1379280.38	11030.00
478021.47	1379280.50	11274.00
478027.72	1379280.63	10233.00
478033.97	1379280.88	10001.00
478040.22	1379281.00	8956.00
478046.47	1379281.25	11030.00
478052.72	1379281.38	9902.00
478058.97	1379281.50	11407.00
477958.81	1379285.00	10654.00
477965.06	1379285.25	11915.00
477971.31	1379285.38	11953.00
477977.56	1379285.50	13044.00

1009

5174

TABLE F-15C
(Continued)

Coordinates		
North	East	Reading (CPM)
477983.81	1379285.75	12459.00
477990.06	1379285.88	15049.00
477996.31	1379286.13	12766.00
478002.56	1379286.25	12097.00
478008.81	1379286.38	10939.00
478015.06	1379286.63	11268.00
478021.31	1379286.75	13987.00
478021.56	1379286.88	10583.00
478033.76	1379287.13	38462.00
478040.03	1379287.25	12167.00
478046.28	1379287.50	9616.00
478052.53	1379287.63	8586.00
478058.78	1379287.75	10998.00
477958.66	1379291.25	9967.00
477964.91	1379291.50	11460.00
477971.16	1379291.63	11153.00
477977.41	1379291.75	12629.00
477983.66	1379292.00	13242.00
477989.91	1379292.13	12397.00
477996.13	1379292.38	13453.00
478002.38	1379292.50	18127.00
478008.63	1379292.63	16449.00
478014.88	1379292.88	11561.00
478021.13	1379293.00	33909.00
478027.38	1379293.13	26906.00
477808.53	1379293.38	3617.00
478033.63	1379293.38	11674.00
478039.88	1379293.50	9430.00
478046.13	1379293.63	11071.00
478052.38	1379293.88	13334.00
478058.63	1379294.00	10170.00
477858.53	1379294.75	3392.00
477908.50	1379296.13	3620.00
477933.50	1379296.88	8876.00
477939.75	1379297.00	9773.00
477946.00	1379297.25	8597.00
477952.25	1379297.38	8120.00
477958.47	1379297.50	9773.00
477958.47	1379297.50	4393.00
477964.72	1379297.75	15001.00
477970.97	1379297.88	13453.00
477977.22	1379298.00	24001.00
477983.47	1379298.25	13101.00
477989.72	1379298.38	15709.00

1010

5174

TABLE F-15C
(Continued)

Coordinates		
North	East	Reading (CPM)
477995.97	1379298.63	14355.00
478008.47	1379298.88	7018.00
478008.47	1379298.88	38962.00
478014.72	1379299.13	11549.00
478020.97	1379299.25	26786.00
478027.22	1379299.38	32978.00
478033.47	1379299.63	20870.00
478039.69	1379299.75	10601.00
478045.94	1379299.88	10703.00
478052.19	1379300.13	9741.00
478058.44	1379300.25	5174.00
478058.44	1379300.25	9879.00
477933.31	1379303.13	8866.00
477939.56	1379303.25	7989.00
477945.81	1379303.50	7548.00
477952.06	1379303.63	8380.00
477958.31	1379303.75	13334.00
477964.56	1379304.00	10715.00
477970.81	1379304.13	11000.00
477977.06	1379304.25	12720.00
477983.31	1379304.50	13526.00
477989.56	1379304.63	15346.00
477995.81	1379304.88	16107.00
478002.03	1379305.00	14539.00
478008.28	1379305.13	17342.00
478014.53	1379305.38	14706.00
478020.78	1379305.50	12245.00
478027.03	1379105.63	21127.00
478033.28	1379305.88	50001.00
478039.53	1379306.00	8808.00
478045.78	1379306.13	10136.00
478052.03	1379306.38	10642.00
478058.28	1379306.50	9555.00
477933.16	1379309.38	7634.00
477939.41	1379309.50	9376.00
477945.66	1379309.75	8621.00
477951.91	1379309.88	8939.00
477958.13	1379310.00	10681.00
477964.38	1379310.25	14507.00
477970.63	1379310.38	11407.00
477976.88	1379310.50	17068.00
477986.13	1379310.75	11386.00
477989.38	1379310.88	12655.00
477995.63	1379311.00	14151.00

1011

TABLE F-15C
(Continued)

Coordinates		
North	East	Reading (CPM)
478001.88	1379311.25	10490.00
478008.13	1379311.38	15464.00
478014.38	1379311.63	11132.00
478020.63	1379311.75	12589.00
478026.88	1379311.88	11868.00
478033.13	1379312.13	11812.00
478039.38	1379312.25	10417.00
478045.59	1379312.38	10870.00
478051.84	1379312.63	11953.00
478058.09	1379312.75	9719.00
477932.97	1379315.63	8065.00
477939.22	1379315.75	8087.00
477945.47	1379316.00	7823.00
477951.72	1379316.13	8939.00
477957.97	1379316.25	13954.00
477964.22	1379316.50	11153.00
477970.47	1379316.63	13514.00
477976.72	1379316.75	15464.00
477982.97	1379317.00	15076.00
477989.22	1379317.13	30001.00
477995.47	1379317.25	18293.00
478001.69	1379317.50	14922.00
478007.94	1379317.63	17008.00
478014.19	1379317.88	15916.00
478020.44	1379318.00	16539.00
478026.69	1379318.13	15307.00
478032.94	1379318.38	12009.00
478039.19	1379318.50	10417.00
478045.44	1379318.63	10310.00
478051.69	1379318.88	9805.00
478057.94	1379319.00	8824.00
477932.81	1379321.88	8558.00
477939.06	1379322.00	8533.00
477945.31	1379322.25	10170.00
477957.81	1379322.50	14151.00
477964.03	1379322.75	10677.00
477970.28	1379322.88	18634.00
477976.53	1379323.00	22069.00
477982.78	1379323.25	18529.00
477898.03	1379323.38	19428.00
477995.28	1379323.50	28104.00
478001.53	1379323.75	30304.00
478007.78	1379323.88	16760.00
477107.44	1379324.25	2943.00

1012

TABLE F-15C
(Continued)

Coordinates		
North	East	Reading (CPM)
478020.28	1379324.25	18359.00
478026.53	1379324.38	22141.00
478032.78	1379324.63	9741.00
478039.03	1379324.75	8311.00
478045.25	1379324.88	10286.00
478051.50	1379325.13	10291.00
478057.75	1379325.25	9376.00
477157.41	1379325.63	4219.00
477932.63	1379328.13	9748.00
477938.88	1379328.25	16571.00
477257.38	1379328.38	4376.00
477945.13	1379328.38	11495.00
477951.38	1379328.63	12475.00
477957.63	1379328.75	16130.00
477963.88	1379329.00	13216.00
477970.13	1379329.13	15001.00
477976.38	1379329.25	12946.00
477982.63	1379329.50	10078.00
477988.88	1379329.63	11321.00
477307.34	1379329.75	4375.00
477995.13	1379329.75	22808.00
478001.38	1379330.00	12606.00
478007.59	1379330.13	11939.00
478013.84	1379330.38	10472.00
478020.09	1379330.50	10381.00
478026.34	1379330.63	10034.00
478032.59	1379330.88	11868.00
477357.34	1379331.13	3800.00
477932.47	1379334.38	9494.00
477938.72	1379334.50	9887.00
477944.97	1379334.63	19878.00
477951.22	1379334.88	14564.00
477957.47	1379335.00	15545.00
477507.28	1379335.25	4857.00
477963.72	1379335.25	11812.00
477969.94	1379335.38	9879.00
477982.44	1379335.75	12245.00
477988.69	1379335.88	11153.00
477994.94	1379336.00	11243.00
478001.19	1379336.25	9147.00
478007.44	1379336.38	10870.00
477557.25	1379336.63	5232.00
478013.69	1379336.63	10123.00
478019.94	1379336.75	10490.00

1013

TABLE F-15C
(Continued)

Coordinates		
North	East	Reading (CPM)
478026.19	1379336.88	12321.00
478032.44	1379337.13	14469.00
477932.28	1379340.63	9431.00
477938.53	1379340.75	10734.00
477944.78	379340.88	13678.00
477951.03	1379341.13	17493.00
477957.28	1379341.25	13343.00
477963.53	1379341.50	41667.00
477969.78	1379341.63	10205.00
477976.03	1379341.75	12001.00
477757.19	1379342.00	3884.00
477982.28	1379342.00	11321.00
477988.53	1379342.13	10910.00
477994.78	1379342.25	13954.00
478001.03	1379342.50	10494.00
478007.28	1379342.63	9555.00
478013.50	1379342.75	11517.00
478019.75	1379343.00	12606.00
478026.00	1379343.13	14286.00
477807.16	1379343.38	5146.00
478032.25	1379343.38	23347.00
477857.16	1379344.75	3920.00
477907.13	1379346.13	4812.00
477932.13	1379346.88	9647.00
477938.38	1379347.00	10381.00
477944.63	1379347.13	12162.00
477950.88	1379347.38	12051.00
477957.13	1379347.50	11569.00
477957.13	1379347.50	19737.00
477963.38	1379347.75	19119.00
477969.63	1379347.88	17143.00
477975.84	1379348.00	18099.00
477982.09	1379348.25	12245.00
477988.34	1379348.38	11468.00
477994.59	1379348.50	17868.00
478000.84	1379348.75	10102.00
478007.09	1379348.88	10792.00
478007.09	1379348.88	5482.00
478013.34	1379349.00	12553.00
478019.59	1379349.25	12171.00
478025.84	1379349.38	12073.00
478032.09	1379349.63	13575.00
478057.06	1379350.25	1014 5564.00
478082.06	1379351.00	10409.00

5174

TABLE F-15C
(Continued)

Coordinates		Reading (CPM)
North	East	
478088.31	1379351.13	15076.00
478094.56	1379351.25	15076.00
478100.81	1379351.50	8646.00
478107.06	1379351.63	3442.00
478107.06	1379351.63	6616.00
477981.94	1379354.50	12669.00
477988.19	1379354.63	18293.00
477994.44	1379354.75	13393.00
478000.69	1379355.00	14286.00
478006.94	1379355.13	17242.00
478081.91	1379357.25	11798.00
478088.16	1379357.38	16449.00
478094.41	1379357.50	12459.00
478100.63	1379357.75	14399.00
478106.88	1379357.88	7043.00
477981.75	1379360.75	12350.00
477988.00	1379360.88	15307.00
477994.25	1379631.00	12998.00
478000.50	1379361.25	12462.00
478006.75	1379361.38	9298.00
478081.72	1379363.38	10527.00
478087.97	1379363.63	24001.00
478094.22	1379363.75	10345.00
478100.47	1379364.00	9601.00
478106.72	1379364.13	6473.00
477981.59	1379367.00	9346.00
477987.84	1379367.13	18418.00
477994.09	1379367.25	16217.00
478000.34	1379367.50	22399.00
478006.59	1379367.63	17136.00
478081.56	1379369.63	10601.00
478087.81	1379369.88	11517.00
478094.06	1379370.00	10292.00
478100.31	1379370.25	9199.00
478106.53	1379370.38	6616.00
477981.41	1379373.25	11036.00
477987.66	1379373.38	9355.00
477993.91	1379373.50	14564.00
478000.16	1379373.75	20271.00
478006.41	1379373.88	16875.00
477106.06	1379374.25	3428.00
478031.41	1379374.63	9688.00
478037.66	1379374.75	10345.00
478043.91	1379374.88	10473.00

1015

5174

TABLE F-15C
(Continued)

Coordinates		
North	East	Reading (CPM)
478050.16	1379375.13	13954.00
478056.41	1379375.25	14425.00
477156.03	1379375.63	4272.50
478081.38	1379375.88	10910.00
478087.63	1379376.13	14743.00
478093.88	1379376.25	10310.00
478100.13	1379376.50	8011.00
478106.38	1379376.63	5587.00
477206.03	1379377.00	4764.50
477256.00	1379378.38	4416.50
477306.00	1379379.75	4904.00
478031.22	1379380.75	10129.00
478037.47	1379381.00	11219.00
477355.97	1379381.13	5647.00
478043.72	1379381.13	8722.00
478049.97	1379381.38	9879.00
478056.22	1379381.50	11638.00
478081.22	1379382.13	11132.00
478087.47	1379382.38	24897.00
477405.94	1379382.50	3724.00
478093.72	1379382.50	11473.00
478099.97	1379382.75	7491.00
478106.19	1379382.88	6466.00
477455.94	1379383.88	2937.00
477505.91	1379385.25	3660.00
477555.91	1379386.50	4499.00
478031.06	1379387.00	9494.00
478037.31	1379387.25	9773.00
478043.56	1379387.38	8824.00
478049.81	1379387.63	8042.00
478056.06	1379387.75	10310.00
477605.88	1379387.88	3632.00
478081.03	1379388.36	12969.00
478087.28	1379388.63	22557.00
478093.53	1379388.75	7482.00
478099.78	1379389.00	7539.00
478106.03	1379389.13	5786.00
477655.84	1379389.25	5720.00
477705.84	1379390.63	4292.00
477755.81	1379392.00	4006.00
478030.88	1379393.25	11364.00
477805.81	1379393.38	4442.00
478037.13	1379393.50	9804.00
478043.38	1379393.63	9741.00

1016

5174

TABLE F-15C
(Continued)

Coordinates		
North	East	Reading (CPM)
478049.63	1379393.88	8194.00
478055.88	1379394.00	10677.00
478080.88	1379394.63	15707.00
477855.78	1379394.75	5210.00
478087.13	1379394.88	16217.00
478093.38	1379395.00	9984.00
478099.63	1379395.13	6742.00
478105.88	1379395.38	5883.00
477905.75	1379396.13	4216.00
477955.75	1379397.50	3694.00
477980.75	1379398.13	8597.00
477987.00	1379398.38	5498.00
477993.22	1379398.50	5883.00
477999.47	1379398.75	7793.00
478005.72	1379398.88	5752.00
478005.72	1379398.88	10753.00
478030.72	1379399.50	8451.00
478036.97	1379399.75	9827.00
478043.22	1379399.88	10870.00
478049.47	1379400.13	8001.00
478055.72	1379400.25	4558.00
478055.72	1379400.25	10338.00
478061.97	1379400.38	11651.00
478068.22	1379400.63	11835.00
478074.44	1379400.75	11742.00
478080.69	1379400.88	17700.00
478086.94	1379401.13	25975.00
478093.19	1379401.25	9088.00
478099.44	1379401.38	7160.00
478105.69	1379401.63	7002.00
477980.56	1379404.38	7693.00
477986.81	1397404.63	5182.00
477993.06	1379404.75	6953.00
477999.31	1379405.00	10295.00
478005.56	1379405.13	14635.00
478030.56	1379405.75	9804.00
478036.78	1379406.00	11765.00
477355.28	1379406.13	10417.00
478043.03	1379406.13	9208.00
477361.53	1379406.25	12097.00
477367.78	1379406.38	8487.00
478055.53	1379406.50	10734.00
477374.03	1379406.63	7576.00
478061.78	1379406.63	11451.00

1017

TABLE F-15C
(Continued)

Coordinates		
North	East	Reading (CPM)
477380.28	1379406.75	8634.00
478068.03	1379406.88	11742.00
478074.28	1379407.00	12423.00
478080.53	1379407.13	82760.00
478086.78	1379407.38	32269.00
477980.41	1379410.63	7634.00
477986.66	1379410.88	7239.00
477992.88	1379411.00	16854.00
477999.13	1379411.25	18182.00
478005.38	1379411.38	12487.00
478030.38	1379412.00	11868.00
478036.63	1379412.25	18073.00
477355.13	1379412.38	9524.00
478042.88	1379412.38	9400.00
477361.38	1379412.50	9161.00
478049.13	1379412.50	10136.00
477367.63	1379412.63	8379.00
478055.38	1379412.75	11174.00
477373.64	1379412.88	10381.00
478061.63	1379412.88	11091.00
477380.09	1379413.00	12171.00
478067.88	1379413.13	13168.00
478074.13	1379413.25	16261.00
478080.34	1379413.38	40910.00
478086.59	1379413.63	19231.00
477730.16	1379416.38	8899.00
477736.41	1379416.50	10453.00
477742.66	1379416.63	16714.00
477748.88	1379416.88	11407.00
477980.22	1379416.88	9494.00
477755.13	1379417.00	8380.00
477986.47	1379417.13	11283.00
477992.72	1379417.25	12944.00
477998.97	1379417.50	18751.00
478005.22	1379417.63	16778.00
478030.22	1379418.25	13606.00
477805.13	1379418.38	9133.00
477811.38	1379418.50	9203.00
478036.44	1379418.50	19934.00
477354.94	1379418.63	9616.00
478042.69	1379418.63	12245.00
477361.19	1379418.75	8772.00
477817.63	1379418.75	8811.00
478048.94	1379418.75	12146.00

1018

5174

TABLE F-15C
(Continued)

Coordinates		
North	East	Reading (CPM)
477367.44	1379418.88	8186.00
477823.88	1379418.88	12025.00
478055.19	1379419.00	11010.00
477373.69	1379419.13	12245.00
477830.09	1379419.13	11321.00
478061.44	1379419.13	11236.00
477379.94	1379419.25	9984.00
478067.69	1379419.38	15464.00
478073.94	1379419.50	16001.00
478080.19	1379419.63	45802.00
477729.97	1379422.63	8043.00
477736.22	1379422.75	9464.00
477742.47	1379422.88	9984.00
477748.72	1379423.13	14899.00
477980.06	1379423.13	8824.00
477754.97	1379423.25	8916.00
477986.31	1379423.38	28347.00
477992.56	1379423.50	66520.00
477998.78	1379423.75	10601.00
478005.03	1379423.88	10274.00
478030.03	1379424.50	9570.00
477804.94	1379424.63	9585.00
477811.19	1379424.75	10490.00
478036.28	1379424.75	11977.00
477354.78	1379424.88	8634.00
478042.53	1379424.88	11638.00
477361.03	1379425.00	9601.00
477817.44	1379425.00	13304.00
478048.78	1379425.00	11321.00
477367.28	1379425.13	9837.00
477823.69	1379425.13	11268.00
478055.03	1379425.25	11071.00
477373.53	1379425.38	7742.00
477829.94	1379425.38	16173.00
478061.28	1379425.38	11939.00
477379.75	1379425.50	8451.00
478067.53	1379425.63	11977.00
478073.78	1379425.75	18248.00
478080.00	1379425.88	13514.00
477729.81	1379428.88	13545.00
477736.06	1379429.00	9091.00
477742.31	1379429.13	8619.00
477746.56	1379429.38	30001.00
477979.88	1379429.38	15239.00

1019

5174

TABLE F-15C
(Continued)

Coordinates		
North	East	Reading (CPM)
477754.78	1379429.50	10870.00
477986.13	1379429.63	50858.00
477304.63	1379429.75	4635.00
477992.38	1379429.75	8572.00
477998.63	1379429.88	7916.00
478004.88	1379430.13	8427.00
478029.88	1379430.75	8623.00
477804.78	1379430.88	10345.00
477811.03	1379431.00	14320.00
478036.13	1379431.00	13334.00
477354.59	1379431.13	3920.00
477354.59	1379431.13	8120.00
478042.34	1379431.13	42868.00
477360.84	1379431.25	8380.00
477817.28	1379431.25	10527.00
478048.59	1379431.25	13770.00
477367.09	1379431.38	9274.00
477823.53	1379431.38	9555.00
478054.84	1379431.50	12909.00
477373.34	1379431.63	9570.00
477829.78	1379431.63	8721.00
478061.09	1379431.63	10792.00
477379.59	1379431.75	8523.00
478067.34	1379431.88	13304.00
478073.59	1379432.00	25317.00
478079.84	1379432.13	11696.00
477404.59	1379432.38	4992.00
477404.59	1379432.38	10001.00
477410.84	1379432.63	8427.00
477417.09	1379432.75	9246.00
477423.31	1379433.00	9951.00
477429.56	1379433.13	9246.00
477454.56	1379433.75	4114.00
477504.53	1379435.13	3231.00
477729.63	1379435.13	9820.00
477735.88	1379435.25	9837.00
477742.13	1379435.38	11729.00
477748.38	1379435.63	8621.00
477979.72	1379435.63	7417.00
477754.63	1379435.75	8811.00
477985.97	1379435.88	8558.00
477992.22	1379436.00	8942.00
477998.47	1379436.13	8220.00
478004.69	1379436.38	8153.00

1020

TABLE F-15C
(Continued)

Coordinates		
North	East	Reading (CPM)
478029.69	1379437.00	8907.00
477804.59	1379437.13	11091.00
477810.84	1379437.25	9967.00
478035.94	1379437.25	17342.00
478042.19	1379437.38	15239.00
477817.09	1379437.50	9088.00
478048.44	1379437.50	15284.00
477823.34	1379437.63	9161.00
478054.69	1379437.75	12606.00
477604.50	1379437.88	3356.00
477829.59	1379437.88	7634.00
478060.94	1379437.88	13794.00
478067.19	1379438.13	11386.00
478073.44	1379438.25	12858.00
478079.69	1379438.38	10890.00
477404.41	1379438.63	11868.00
477410.66	1379438.88	17965.00
477416.91	1379439.00	9741.00
477423.16	1379439.25	9662.00
477654.50	1379439.25	4164.00
477429.41	1379439.38	12904.00
477679.47	1379440.00	10310.00
477685.72	1379440.13	17658.00
477691.97	1379440.25	18938.00
477698.22	1379440.50	11868.00
477704.47	1379440.63	13899.00
477704.47	1379440.63	5652.00
477710.72	1379440.88	11939.00
477716.97	1379441.00	13546.00
477723.22	1379441.13	9346.00
477729.47	1379441.38	12073.00
477735.72	1379441.50	8584.00
477741.97	1379441.63	11561.00
477748.22	1379441.88	8669.00
477979.53	1379441.88	6652.00
477754.44	1379442.00	8011.00
477754.44	1379442.00	3857.00
477985.78	1379442.13	7399.00
477992.03	1379442.25	7992.00
477998.28	1379442.38	9647.00
478004.53	1379442.63	7501.00
478029.53	1379443.25	14029.00
477804.44	1379443.38	9376.00
477804.44	1379443.38	4560.00

1021

5174

TABLE F-15C
(Continued)

Coordinates		
North	East	Reading (CPM)
477810.69	1379443.50	8721.00
478035.78	1379443.50	25426.00
478042.03	1379443.50	12254.00
478048.25	1379443.75	12001.00
477823.19	1379443.88	8511.00
478054.50	1379444.00	11407.00
477829.44	1379444.13	8621.00
478060.75	1379444.13	16394.00
478067.00	1379444.38	24794.00
478073.25	1379444.50	83800.00
477854.41	1379444.50	3917.00
477404.25	1379444.88	12821.00
477410.50	1379445.13	14286.00
477416.75	1379445.25	10338.00
477423.00	1379445.50	9105.00
477429.22	1379445.63	12321.00
477904.41	1379446.13	4339.00
477679.31	1379446.25	9494.00
477685.56	1379446.38	13216.00
477691.81	1379446.50	10753.00
477698.06	1379446.75	22223.00
477929.38	1379446.75	8147.00
477704.31	1379446.88	10409.00
477710.56	1379447.00	12821.00
477935.63	1379447.00	8065.00
477941.88	1379447.13	8404.00
477716.78	1379447.25	11517.00
477948.13	1379447.25	7968.00
477723.03	1379447.38	11071.00
477954.38	1379447.50	5687.00
477954.38	1379447.50	11285.00
477729.28	1379447.63	12296.00
477960.63	1379447.63	18759.00
477735.53	1379447.75	11321.00
477741.78	1379447.88	12122.00
477966.88	1379447.88	15464.00
477973.13	1379448.00	7732.00
477748.03	1379448.13	8334.00
477979.38	1379448.13	8175.00
477754.28	1379448.25	8942.00
477985.63	1379448.38	7968.00
477991.88	1379448.50	7409.00
477998.13	1379448.63	9193.00
478004.36	1379448.88	10696.00

1022

D. 5174

TABLE F-15C
(Continued)

Coordinates		
North	East	Reading (CPM)
478004.38	1379448.88	4769.00
478004.38	1379448.88	9945.00
478010.59	1379449.00	9688.00
478016.84	1379449.25	9105.00
478023.09	1379449.38	10939.00
478029.34	1379449.50	15707.00
478035.59	1379449.75	9616.00
478041.84	1379449.88	14229.00
478048.09	1379450.00	11765.00
478054.34	1379450.25	11300.00
478054.34	1379450.25	5323.00
478060.59	1379450.38	10979.00
478066.84	1379450.50	15346.00
478073.09	1379450.75	24001.00
477410.31	1379451.38	14815.00
477416.56	1379451.50	15759.00
478104.31	1379451.63	5137.00
477422.81	1379451.75	8380.00
477429.06	1379451.88	9464.00
477679.13	1379452.50	9317.00
477685.38	1379452.63	8942.00
477691.63	1379452.75	12321.00
477697.88	1379453.00	14609.00
477929.22	1379453.00	5273.00
477704.13	1379453.13	15190.00
477710.38	1379453.25	10338.00
477935.47	1379453.25	8175.00
477941.72	1379453.38	7927.00
477716.63	1379453.50	7895.00
477947.97	1379453.50	6897.00
477722.88	1379453.63	8011.00
477954.22	1379453.75	15707.00
477729.13	1379453.88	12196.00
477960.47	1379453.88	11927.00
477735.38	1379454.00	6363.00
477741.63	1379454.13	10601.00
477966.69	1379454.13	10602.00
477972.94	1379454.25	9037.00
477747.88	1379454.38	7828.00
477979.19	1379454.38	6961.00
477754.13	1379454.50	9050.00
478004.13	1379455.13	10001.00
478010.44	1379455.25	12632.00
478016.69	1379455.50	8824.00

5174

TABLE F-15C
(Continued)

Coordinates		
North	East	Reading (CPM)
478022.94	1379455.63	11236.00
478029.19	1379455.75	17572.00
478035.44	1379456.00	27788.00
478041.69	1379456.13	22399.00
478047.94	1379456.25	11451.00
478054.16	1379456.50	11763.00
478060.41	1379456.63	18913.00
477378.91	1379456.75	9129.00
478066.66	1379456.75	23530.00
477385.16	1379456.88	8824.00
478072.91	1379457.00	9922.00
477391.41	1379457.13	8808.00
477397.66	1379457.25	16667.00
477403.91	1379457.38	26906.00
477410.16	1379457.68	13016.00
477416.41	1379457.75	6961.00
477422.66	1379458.00	9217.00
477428.91	1379458.13	10939.00
477678.97	1379458.75	8404.00
477685.22	1379458.88	8001.00
477691.47	1379459.00	7624.00
477697.72	1379459.25	8276.00
477929.03	1379459.25	7069.00
477703.97	1379459.38	15874.00
477710.22	1379459.50	21212.00
477935.28	1379459.50	7783.00
477941.53	1379459.63	7160.00
477716.47	1379459.75	8747.00
477947.78	1379459.75	7867.00
477722.69	1379459.88	10136.00
477954.03	1379460.00	17752.00
477728.94	1379460.13	14852.00
477960.28	1379460.13	14635.00
477735.19	1379460.25	17143.00
477741.44	1379460.38	11030.00
477966.53	1379460.38	9585.00
477972.78	1379460.50	10381.00
477747.69	1379460.63	7864.00
477979.03	1379460.63	7813.00
477753.94	1379460.75	8811.00
478004.03	1379461.38	9662.00
478010.25	1379461.50	8254.00
478016.50	1379461.75	9231.00
478022.75	1379461.88	9494.00

1024

TABLE F-15C
(Continued)

Coordinates		
North	East	Reading (CPM)
478029.00	1379462.00	13514.00
478035.25	1379462.25	12196.00
478041.50	1379462.38	11300.00
478047.75	1379462.50	12688.00
478054.00	1379462.75	13730.00
478060.25	1379462.88	23347.00
477378.75	1379463.00	8108.00
478066.50	1379463.00	15152.00
477385.00	1379463.13	9303.00
478072.75	1379463.25	9879.00
477391.22	1379463.38	9555.00
477397.47	1379463.50	14609.00
477403.72	1379463.63	17752.00
477409.97	1379463.88	9885.00
477416.22	1379464.00	7491.00
477422.47	1379464.13	8449.00
477428.72	1379464.38	9647.00
477678.81	1379465.00	8621.00
477685.03	1379465.13	7823.00
477691.28	1379465.25	8120.00
477697.53	1379465.50	9346.00
477928.88	1379465.50	7576.00
477703.78	1379465.63	23905.00
477710.03	1379465.75	30938.00
477935.13	1379465.75	7372.00
477941.38	1379465.88	15125.00
477716.28	1379466.00	8684.00
477947.63	1379466.00	8558.00
477722.53	1379466.13	8276.00
477953.88	1379466.25	9616.00
477728.78	1379466.38	10001.00
477960.13	1379466.38	25249.00
477735.03	1379466.50	10292.00
477741.28	1379466.63	9434.00
477966.38	1379466.63	11953.00
477972.59	1379466.75	7501.00
477747.53	1379466.88	9420.00
477978.84	1379466.88	7093.00
477753.78	1379467.00	8231.00
478003.84	1379467.63	7854.00
478010.09	1379467.75	9570.00
478016.34	1379467.88	10527.00
478022.59	1379468.13	11696.00
478028.84	1379468.25	16484.00

1025

5174

TABLE F-15C
(Continued)

Coordinates		
North	East	Reading (CPM)
478035.09	1379468.50	11853.00
478041.34	1379468.63	12025.00
478047.59	1379468.75	11812.00
478053.81	1379469.00	12122.00
478060.06	1379469.13	20135.00
477378.56	1379469.25	9773.00
478066.31	1379469.25	11939.00
477384.81	1379469.38	9694.00
477391.06	1379469.63	9934.00
477397.31	1379469.75	15666.00
477403.56	1379469.88	9616.00
477409.81	1379470.13	10001.00
477416.06	1379470.25	8619.00
477422.31	1379470.38	9260.00
477428.56	1379470.63	9773.00
477903.72	1379471.13	13334.00
477678.63	1379471.25	9231.00
477909.97	1379471.25	22472.00
477684.88	1379471.38	8357.00
477691.13	1379471.50	8916.00
477916.22	1379471.50	17342.00
477922.47	1379471.63	8824.00
477697.38	1379471.75	7132.00
477703.63	1379471.88	9023.00
477934.94	1379472.00	8108.00
477941.19	1379472.13	16760.00
477947.44	1379472.25	14789.00
477953.69	1379472.50	15249.00
477959.94	1379472.63	27273.00
477966.19	1379472.88	16331.00
477972.44	1379473.00	14926.00
477978.69	1379473.13	8558.00
477984.94	1379473.38	7160.00
477991.19	1379473.50	6994.00
477997.44	1379473.63	9350.00
478003.69	1379473.88	6568.00
478009.94	1379474.00	11132.00
478016.16	1379474.13	14926.00
477103.34	1379474.25	4432.00
478022.41	1379474.38	33718.00
478028.66	1379474.50	25211.00
478034.91	1379474.75	13899.00
478041.16	1379474.88	12543.00
478047.41	1379475.00	11937.00

1026

p. 5174

TABLE F-15C
(Continued)

Coordinates		
North	East	Reading (CPM)
478053.66	1379475.05	15385.00
478059.91	1379475.38	21989.00
477378.41	1379475.50	9405.00
478066.16	1379475.50	10170.00
477153.31	1379475.63	4500.00
477384.66	1379475.63	9585.00
477390.91	1379475.88	9298.00
477397.13	1379476.00	9798.00
477403.38	1379476.13	9647.00
477409.63	1379476.38	10187.00
477415.88	1379476.50	9555.00
477422.13	1379476.63	10773.00
477428.38	1379476.88	9549.00
477203.28	1379477.00	5154.00
477903.53	1379477.38	13637.00
477678.47	1379477.50	9928.00
477909.78	1379477.50	18127.00
477228.28	1379477.63	8451.00
477684.69	1379477.63	9725.00
477234.53	1379477.75	8760.00
477690.94	1379477.75	9434.00
477916.03	1379477.75	23716.00
477922.28	1379477.88	29704.00
477240.78	1379478.00	8824.00
477697.19	1379478.00	8487.00
477928.53	1379478.00	16305.00
477247.03	1379478.13	7875.00
477703.44	1379478.13	8646.00
477934.78	1379478.25	17868.00
477253.28	1379478.38	8231.00
477253.28	1379478.38	4392.00
477941.03	1379478.38	21439.00
477947.28	1379478.50	58824.00
477953.53	1379478.75	34884.00
477959.78	1379478.88	32269.00
477966.03	1379479.13	29704.00
477972.28	1378479.25	49181.00
477978.50	1379479.38	13954.00
477303.25	1379479.63	3941.00
477984.75	1379479.63	7557.00
477991.00	1379479.75	8168.00
477997.25	1379479.88	8671.00
478003.50	1379480.13	9129.00
478009.75	1379480.25	14085.00

1027

5174

TABLE F-15C
(Continued)

Coordinates		
North	East	Reading (CPM)
477328.25	1379480.38	10939.00
478016.00	1379480.38	24097.00
477334.50	1379480.50	12998.00
478022.25	1379480.63	24194.00
477340.75	1379480.75	9820.00
478028.50	1379480.75	20135.00
477347.00	1379480.88	9405.00
477353.25	1379481.00	9798.00
477353.25	1379481.00	4871.00
478034.75	1379481.00	12097.00
478041.00	1379481.13	8653.00
477359.47	1379481.25	9133.00
478047.25	1379481.25	12245.00
477365.72	1379481.38	11174.00
477371.97	1379481.50	9519.00
478053.50	1379481.50	20906.00
478059.72	1379481.63	31414.00
477378.22	1379481.75	9203.00
478065.97	1379481.75	10085.00
477384.47	1379481.88	9376.00
477390.72	1379482.13	8996.00
477396.97	1379482.25	9928.00
477403.22	1379482.38	4624.00
477403.22	1379482.38	9376.00
477409.47	1379482.63	8785.00
477415.72	1379482.75	9105.00
477421.97	1379482.88	9879.00
477428.22	1379483.13	10102.00
477903.38	1379483.63	7529.00
477453.19	1379483.75	5296.00
477678.28	1379483.75	9741.00
477909.63	1373483.75	8998.00
477234.34	1379484.00	9361.00
477690.78	1379484.00	8824.00
477915.88	1379484.00	23623.00
477922.13	1379484.13	22557.00
477240.59	1379484.25	9303.00
477697.03	1379484.25	8560.00
477928.38	1379484.25	31414.00
477246.84	1379484.38	8254.00
477703.28	1379484.38	8747.00
477253.09	1379484.50	8876.00
477478.19	1379484.50	8899.00
477934.59	1379484.50	23716.00

1028

TABLE F-15C
(Continued)

Coordinates		
North	East	Reading (CPM)
477484.44	1379484.63	10034.00
477940.84	1379484.63	14926.00
477490.69	1379484.75	10773.00
477947.09	1379484.75	28170.00
477496.94	1379485.00	10345.00
477953.34	1379485.00	52872.00
477503.19	1379485.13	5132.00
477503.19	1379485.13	9879.00
477959.59	1379485.13	165701.00
477965.84	1379485.25	111110.00
477972.09	1379485.50	68030.00
477978.34	1379485.63	42868.00
477528.16	1379485.88	10564.00
477984.59	1379485.88	17752.00
477534.41	1379486.00	8760.00
477990.84	1379486.00	14574.00
477540.66	1379486.13	9064.00
477997.09	1379486.13	9974.00
477546.91	1379486.38	9885.00
478003.34	1379486.38	13545.00
477553.16	1379486.50	5550.00
477553.16	1379486.50	17193.00
478009.59	1379486.50	19481.00
477328.06	1379486.63	9647.00
478015.84	1379486.63	24897.00
477334.31	1379466.75	8108.00
478022.06	1379486.88	20145.00
477340.56	1379487.00	9147.00
478028.31	1379487.00	21353.00
477346.81	1379487.13	9346.00
477353.06	1379487.25	9967.00
478034.56	1379487.25	19737.00
478040.81	1379487.38	10715.00
477359.31	1379487.50	8584.00
478047.06	1379487.50	12821.00
477365.56	1379487.63	13545.00
477371.81	1379487.75	10649.00
478053.31	1379487.75	23905.00
477603.16	1379487.88	4375.00
478059.56	1379487.88	12821.00
477378.06	1379488.00	8956.00
477653.13	1379489.25	4409.00
477903.19	1379489.88	7875.00
477678.13	1379490.00	10129.00

1029

5174

TABLE F-15C
(Continued)

Coordinates		
North	East	Reading (CPM)
477909.44	1379490.00	8120.00
477227.94	1379490.13	8087.00
477684.38	1379490.13	10222.00
477234.19	1379490.25	11268.00
477690.59	1379490.25	7937.00
477915.69	1379490.25	19673.00
477921.94	1379490.38	9757.00
477240.44	1379490.50	9934.00
477696.84	1379490.50	9616.00
477928.19	1379490.50	13423.00
477246.69	1379490.63	8463.00
477703.09	1379490.63	8939.00
477703.09	1379490.63	4344.00
477252.94	1379490.75	7875.00
477478.03	1379490.75	9260.00
477934.44	1379490.75	27273.00
477484.25	1379490.88	9757.00
477940.69	1379490.88	12501.00
477490.50	1379491.00	10527.00
477946.75	1379491.25	11386.00
477496.94	1379491.00	28437.00
477953.19	1379491.25	20001.00
477503.00	1379491.38	12245.00
477959.44	1379491.38	155260.00
477965.69	1379491.50	35715.00
477971.94	1379491.75	22901.00
477978.16	1379491.88	60480.00
477753.09	1379492.00	4321.00
477528.00	1379492.13	9585.00
477984.41	1379492.13	10684.00
477534.25	1379492.25	12171.00
477990.66	1379492.25	10527.00
477540.50	1379492.38	12669.00
477996.91	1379492.38	21740.00
477546.75	1379492.63	9519.00
478003.16	1379492.63	16667.00
477553.00	1379492.75	9274.00
478009.41	1379492.75	16484.00
477327.91	1379492.88	7605.00
478015.66	1379492.88	21908.00
477334.16	1379493.00	8979.00
476021.91	1379493.13	20488.00
477340.41	1379493.25	1030 9489.00
478028.16	1379493.25	144242.00

TABLE F-15C
(Continued)

Coordinates		
North	East	Reading (CPM)
477346.66	1379493.38	10001.00
477803.06	1379493.38	4094.00
477803.06	1379493.38	4094.00
477352.91	1379493.50	9616.00
478034.41	1379493.50	9647.00
478040.66	1379493.63	11364.00
477359.13	1379493.75	11473.00
478046.91	1379493.75	11977.00
477365.38	1379493.88	13974.00
477371.63	1379494.00	18529.00
478053.16	1379494.00	31915.00
478059.41	1379494.13	10773.00
477377.88	1379494.25	10870.00
477853.06	1379494.75	3548.00
477903.03	1379496.13	8011.00
477903.03	1379496.13	3917.00
477909.28	1379496.25	7491.00
477227.78	1379496.38	16621.00
477234.03	1379496.50	56075.00
477915.53	1379496.50	8033.00
477921.78	1379496.63	14743.00
477240.25	1379496.75	12196.00
477928.03	1379496.75	21053.00
477246.50	1379496.88	9934.00
477252.75	1379497.00	8276.00
477477.84	1379497.00	11112.00
477934.28	1379497.00	9798.00
477484.09	1379497.13	10870.00
477940.50	1379497.13	37048.00
477490.34	1379497.25	11868.00
477946.75	1379497.25	25863.00
477496.59	1379497.50	10490.00
477953.00	1379497.50	14563.00
477953.00	1379497.50	27523.00
477502.84	1379497.63	11549.00
477959.25	1379497.63	24391.00
477965.50	1379497.75	106980.00
477971.75	1379498.00	26829.00
477978.00	1379498.13	9879.00
477527.81	1379498.38	9647.00
477534.06	1379498.50	11638.00
477990.50	1379498.50	8043.00
477540.31	1379498.63	11765.00
477996.75	1379498.63	11321.00

1031

TABLE F-15C
(Continued)

Coordinates		
North	East	Reading (CPM)
477546.56	1379498.88	10129.00
478003.00	1379498.88	30613.00
478003.00	1379498.88	16922.00
477552.81	1379499.00	9725.00
478009.25	1379499.00	25317.00
477327.72	1379499.13	9346.00
478015.50	1379499.13	25001.00
477333.97	1379499.25	9837.00
478021.75	1379499.38	23077.00
477340.22	1379499.50	10831.00
478027.97	1379499.50	11617.00
477346.47	1379499.63	13246.00
477352.72	1379499.75	12296.00
478034.22	1379499.75	10649.00
478040.47	1379499.88	12501.00
477358.97	1379500:00	12876.00
478046.72	1379500.00	14493.00
477365.22	1379500.13	21439.00
477371.47	1379500.25	10153.00
478052.97	1379500.25	8025.00
478052.97	1379500.25	16484.00
478059.22	1379500.38	9346.00
477377.72	1379500.50	10527.00
477902.84	1379502.38	8785.00
477909.09	1379502.50	7615.00
477227.59	1379502.63	12686.00
477915.34	1379502.63	12876.00
477233.84	1379502.75	13709.00
477921.59	1379502.88	6905.00
477240.09	1379503.00	12632.00
477927.84	1379503.00	16667.00
477246.34	1379503.13	9934.00
477252.59	1379503.25	9741.00
477477.69	1379503.25	12245.00
477934.09	1379503.25	33520.00
477483.94	1379503.38	13246.00
477940.34	1379503.38	30304.00
477490.16	1379503.50	14320.00
477946.59	1379503.50	21583.00
477496.41	1379503.75	9199.00
477952.84	1379503.75	25642.00
477502.66	1379503.88	11953.00
477959.09	1379503.88	27273.00
477965.34	1379504.00	134730.00

1032

TABLE F-15C
(Continued)

Coordinates		
North	East	Reading (CPM)
477971.59	1379504.25	46154.00
477977.84	1379504.38	13227.00
477527.66	1379504.63	9091.00
477533.91	1379504.75	14493.00
477540.16	1379504.88	10715.00
477546.41	1379505.13	10527.00
477552.66	1379505.25	11153.00
477327.56	1379505.38	10363.00
477333.81	1379505.50	23716.00
477340.06	1379505.75	19428.00
478027.81	1379505.75	17342.00
477346.31	1379505.88	24490.00
478034.06	1379505.88	32619.00
477352.56	1379506.00	27523.00
478040.31	1379506.13	15944.00
477358.81	1379506.25	14852.00
478046.56	1379506.25	11797.00
477365.03	1379506.38	14399.00
477371.28	1379506.50	16714.00
478052.81	1379506.50	11238.00
477377.53	1379506.75	7586.00
477902.69	1379508.63	7463.00
477908.94	1379508.75	7291.00
477915.19	1379508.88	5820.00
477921.44	1379509.13	8119.00
477927.69	1379509.25	9133.00
477477.50	1379509.50	13334.00
477933.94	1379509.50	8220.00
477483.75	1379509.63	11939.00
477940.19	1379509.63	40279.00
477490.00	1379509.75	11977.00
477946.41	1379509.75	30613.00
477496.25	1379510.00	6734.00
477952.66	1379510.00	24794.00
477502.50	1379510.13	10979.00
477958.91	1379510.13	18634.00
477965.16	1379510.25	58824.00
477508.75	1379510.38	9088.00
477515.00	1379510.50	9037.00
477971.41	1379510.50	69130.00
477521.25	1379510.63	8646.00
477977.66	1379510.63	9804.00
477527.50	1379510.88	8621.00
477533.72	1379511.00	8231.00

TABLE F-15C
(Continued)

Coordinates		
North	East	Reading (CPM)
477539.97	1379511.13	11561.00
477546.22	1379511.38	9434.00
477552.47	1379511.50	10668.00
477327.38	1379511.63	11439.00
477333.63	1379511.75	12475.00
477339.88	1379512.00	14789.00
478027.63	1379512.00	12573.00
477346.13	1379512.13	11321.00
478033.88	1379512.13	11321.00
477352.38	1379512.25	10527.00
478040.13	1379512.38	10647.00
477358.63	1379512.50	13637.00
478046.38	1379512.50	11638.00
477364.88	1379512.63	11300.00
477371.13	1379512.75	13423.00
478052.63	1379512.75	36810.00
477377.38	1379513.00	13016.00
477902.53	1379514.88	6518.00
477908.75	1379515.00	6773.00
477915.00	1379515.13	7248.00
477921.25	1379515.38	7906.00
477927.50	1379515.50	8584.00
477477.34	1379515.75	10381.00
477933.75	1379515.75	8427.00
477483.59	1379515.88	10870.00
477940.00	1379515.88	9231.00
477489.84	1379516.00	9837.00
477946.25	1379516.00	25642.00
477496.06	1379516.25	10334.00
477952.50	1379516.25	21372.00
477502.31	1379516.38	10274.00
477958.75	1379516.38	19878.00
477508.56	1379516.50	8619.00
477965.00	1379516.50	21389.00
477514.81	1379516.75	8850.00
477971.25	1379516.75	25651.00
477521.06	1379516.88	9570.00
477977.50	1379516.88	26559.00
477752.41	1379517.00	8956.00
477527.31	1379517.13	8597.00
477758.66	1379517.13	9105.00
477533.56	1379517.25	8345.00
477539.81	1379517.38	7990.00
477764.91	1379517.38	8646.00

5174

TABLE F-15C
(Continued)

Coordinates		
North	East	Reading (CPM)
477771.16	1379517.50	8487.00
477546.06	1379517.63	9217.00
477777.41	1379517.63	10490.00
477552.31	1379517.75	9464.00
477327.22	1379517.88	11289.00
477333.47	1379518.00	11638.00
477339.72	1379518.25	11977.00
478027.47	1379518.25	13016.00
477345.97	1379518.38	11882.00
478033.72	1379518.38	11868.00
477352.22	1379518.50	9570.00
478039.97	1379518.63	28048.00
477358.47	1379518.75	10153.00
478046.22	1379518.75	22901.00
477364.72	1379518.88	13334.00
477370.94	1379519.00	14743.00
478052.47	1379519.00	12501.00
477377.19	1379519.25	9885.00
477902.34	1379521.13	5843.00
477908.59	1379521.25	6985.00
477914.84	1379521.38	7624.00
477921.09	1379521.63	8634.00
477927.34	1379521.75	8186.00
477477.16	1379522.00	8983.00
477933.59	1379522.00	7803.00
477483.41	1379522.13	11386.00
477939.84	1379522.13	8311.00
477489.66	1379522.25	8899.00
477946.09	1379522.25	10062.00
477495.91	1379522.50	7968.00
477952.31	1379522.50	17596.00
477502.16	1379522.63	7793.00
477958.56	1379522.63	12001.00
477508.41	1379522.75	7248.00
477964.81	1379522.75	12346.00
477514.66	1379523.00	10034.00
477971.06	1379523.00	13275.00
477520.91	1379523.13	9494.00
477977.31	1379523.13	10274.00
477752.22	1379523.25	9203.00
477983.56	1379523.25	11549.00
477758.47	1379523.36	8597.00
477533.41	1379523.50	9798.00
477989.81	1379523.50	11638.00

TABLE F-15C
(Continued)

Coordinates		
North	East	Reading (CPM)
477539.63	1379523.63	9274.00
477764.72	1379523.63	7558.00
477996.06	1379523.63	10424.00
477770.97	1379523.75	9719.00
477545.88	1379523.88	8487.00
477777.22	1379523.88	9091.00
478002.31	1379523.88	7256.00
477552.13	1379524.00	10677.00
478008.56	1379524.00	9757.00
477327.06	1379524.13	9741.00
478014.81	1379524.13	13334.00
477101.97	1379524.25	4028.00
477333.28	1379524.25	8684.00
478021.06	1379524.38	10381.00
477339.53	1379524.50	9317.00
478027.31	1379524.50	19878.00
477345.78	1379524.63	9390.00
478033.53	1379524.63	13847.00
477352.03	1379524.75	9616.00
478039.78	1379524.88	32978.00
477358.29	1379525.00	9129.00
478046.03	1379525.00	16217.00
477364.53	1379525.13	14609.00
477370.78	1379525.25	15114.00
478052.28	1379525.25	10136.00
477151.94	1379525.50	4812.00
477377.03	1379525.50	9260.00
477201.94	1379526.88	4490.00
477251.91	1379528.25	4549.00
477477.00	1379528.25	13575.00
477483.25	1379528.38	10870.00
477489.50	1379528.50	8218.00
477495.72	1379528.75	9361.00
477952.16	1379528.75	14564.00
477501.97	1379528.88	8242.00
477958.41	1379528.88	15914.00
477508.22	1379529.00	9773.00
477964.66	1379529.00	13709.00
477514.47	1379529.25	6865.00
477970.91	1379529.25	14355.00
477520.72	1379529.38	8197.00
477977.16	1379529.38	19870.00
477752.06	1379529.50	9879.00
477983.41	1379529.50	14508.00

5174

TABLE F-15C
(Continued)

Coordinates		
North	East	Reading (CPM)
477301.88	1379529.63	4521.00
477526.97	1379529.63	14789.00
477758.31	1379529.63	8808.00
477533.22	1379529.75	16760.00
477889.54	1379529.75	22102.00
477539.47	1379529.88	8186.00
477764.56	1379529.88	12766.00
477995.88	1379529.88	30001.00
477770.81	1379530.00	8939.00
477545.72	1379530.13	8621.00
477777.06	1379530.13	10257.00
478002.13	1379530.13	155450.00
477551.97	1379530.25	9585.00
478008.38	1379530.25	29127.00
477326.88	1379530.38	10435.00
478014.63	1379530.38	16359.00
477333.13	1379530.50	9023.00
478020.88	1379530.63	19058.00
477339.38	1379530.75	9010.00
478027.13	1379530.75	19119.00
477345.63	1379530.88	9519.00
478033.38	1379530.88	18634.00
477351.88	1379531.00	4458.00
477351.88	1379531.00	9601.00
478039.63	1379531.13	25863.00
477358.13	1379531.25	10668.00
478045.88	1379531.25	11729.00
477364.38	1379531.38	13678.00
477370.63	1379531.50	12220.00
477376.84	1379531.75	8380.00
477401.84	1379532.38	10017.00
477401.84	1379532.38	4631.00
477408.09	1379532.63	9725.00
477414.34	1379532.75	10696.00
477420.59	1379532.88	9303.00
477426.84	1379533.13	12245.00
477433.09	1379533.25	14815.00
477439.34	1379533.38	8734.00
477445.59	1379533.63	7463.00
477451.84	1379533.75	8509.00
477451.84	1379533.75	4213.00
477458.06	1379533.88	9091.00
477464.31	1379534.13	7595.00
477470.56	1379534.25	8218.00

TABLE F-15C
(Continued)

Coordinates		
North	East	Reading (CPM)
477476.81	1379534.50	17008.00
477483.06	1379534.63	8983.00
477489.31	1379534.75	15114.00
477495.56	1379535.00	7813.00
477951.97	1379535.00	14355.00
477501.81	1379535.13	4141.00
477501.81	1379535.13	7979.00
477958.22	1379535.13	11765.00
477508.06	1379535.25	10890.00
477964.47	1379535.25	22535.00
477514.31	1379535.50	6899.00
477970.72	1379535.50	18182.00
477520.56	1379535.63	7833.00
477976.97	1379535.63	21740.00
477751.88	1379535.75	9773.00
477983.22	1379535.75	15076.00
477526.81	1379535.88	7548.00
477758.13	1379535.88	9719.00
477533.06	1379536.00	8734.00
477989.47	1379536.00	27038.00
477539.28	1379536.13	9088.00
477764.38	1379536.13	9601.00
477995.72	1379536.13	24794.00
477770.63	1379536.25	8772.00
477545.53	1379536.38	7703.00
477776.88	1379536.38	10668.00
478001.97	1379536.38	33718.00
477551.78	1379536.50	8298.00
477551.78	1379536.50	4379.00
478008.22	1379536.50	25752.00
478014.47	1379536.63	23810.00
478020.72	1379536.88	56075.00
478026.97	1379537.00	25424.00
478033.22	1379537.13	39207.00
478039.44	1379537.38	17040.00
478045.69	1379537.50	9584.00
477601.78	1379537.88	4521.00
477401.69	1379538.63	12025.00
477407.94	1379538.88	11153.00
477414.19	1379539.00	11812.00
477420.41	1379539.13	10435.00
477651.75	1379539.25	4756.00
477426.66	1379539.38	8254.00
477432.91	1379539.50	12527.00

5174

TABLE F-15C
(Continued)

Coordinates		
North	East	Reading (CPM)
477439.16	1379539.63	12146.00
477445.41	1379539.88	11868.00
477451.66	1379540.00	11606.00
477457.91	1379540.13	7703.00
477464.16	1379540.38	7968.00
477470.41	1379540.50	7548.00
477701.75	1379540.63	5235.00
477476.66	1379540.75	25532.00
477482.91	1379540.88	10564.00
477489.16	1379541.00	8560.00
477495.41	1379541.25	9647.00
477951.81	1379541.25	16575.00
477501.63	1379541.38	8760.00
477958.06	1379541.38	16854.00
477964.31	1379541.50	15152.00
477970.56	1379541.75	22069.00
477976.81	1379541.88	35715.00
477751.72	1379542.00	5819.00
477751.72	1379542.00	10850.00
477983.06	1379542.00	34166.00
477757.97	1379542.13	11549.00
477989.31	1379542.25	25001.00
477764.22	1379542.38	9601.00
477995.53	1379542.38	23077.00
477770.47	1379542.50	10153.00
477776.72	1379542.63	9804.00
478001.78	1379542.63	22814.00
478008.03	1379542.75	18405.00
477782.97	1379542.88	11977.00
478014.28	1379542.88	17392.00
477789.19	1379543.00	9023.00
477795.44	1379543.13	12475.00
478020.53	1379543.13	37975.00
478026.78	1379543.25	18574.00
477801.69	1379543.38	4177.00
477801.69	1379543.38	8646.00
478033.03	1379543.38	27150.00
478039.28	1379543.63	10890.00
477851.69	1379544.75	3482.00
477401.50	1379544.88	10472.00
477407.75	1379545.13	10773.00
477414.00	1379545.25	10753.00
477420.25	1379545.38	11473.00
477426.50	1379545.63	11386.00

TABLE F-15C
(Continued)

Coordinates		
North	East	Reading (CPM)
477432.75	1379545.75	10696.00
477439.00	1379545.88	11495.00
477445.25	1379546.13	10102.00
477901.66	1379546.13	3908.00
477451.50	1379546.25	7595.00
477457.75	1379546.38	7510.00
477463.97	1379546.63	8669.00
477470.22	1379546.75	9199.00
477926.66	1379546.75	8011.00
477932.91	1379546.88	11195.00
477476.47	1379547.00	10620.00
477482.72	1379547.13	8903.00
477939.16	1379547.13	18073.00
477488.97	1379547.25	7548.00
477945.41	1379547.25	12932.00
477495.22	1379547.50	10939.00
477951.66	1379547.50	19624.00
477951.66	1379547.50	31251.00
477501.47	1379547.63	9741.00
477957.88	1379547.63	12001.00
477964.13	1379547.75	16217.00
477970.38	1379548.00	29558.00
477976.63	1379548.13	33334.00
477751.53	1379548.25	12712.00
477982.88	1379548.25	15385.00
477757.78	1379548.38	13484.00
477989.13	1379548.50	21127.00
477764.03	1379548.63	12475.00
477995.38	1379548.63	21583.00
477770.28	1379548.75	13044.00
477776.53	1379548.88	15385.00
478001.63	1379548.88	9904.00
478001.63	1379548.88	18182.00
478007.88	1379549.00	16575.00
477782.78	1379549.13	13016.00
478014.13	1379549.13	12712.00
477789.03	1379549.25	22223.00
477795.28	1379549.38	11812.00
478020.38	1379549.38	16394.00
478026.63	1379549.50	15626.00
477801.53	1379549.63	8265.00
478032.88	1379549.63	27038.00
478039.13	1379549.88	11517.00
477401.34	1379551.13	11300.00

TABLE F-15C
(Continued)

Coordinates		
North	East	Reading (CPM)
477407.59	1379551.25	11112.00
477413.84	1379551.50	9091.00
477420.09	1379551.63	9260.00
477426.31	1379551.88	11132.00
477432.56	1379552.00	12904.00
477438.81	1379552.13	8671.00
477445.06	1379552.38	7273.00
477451.31	1379552.50	6316.00
477457.56	1379552.63	7126.00
477463.81	1379552.88	8772.00
477470.06	1379553.00	6428.00
477926.47	1379553.00	8535.00
477932.72	1379553.13	9837.00
477476.31	1379553.25	8979.00
477482.56	1379553.38	14743.00
477938.97	1379553.38	22472.00
477488.81	1379553.50	7135.00
477945.22	1379553.50	40001.00
477495.06	1379553.75	8558.00
477951.47	1379553.75	18634.00
477501.31	1379553.88	6811.00
477957.72	1379553.88	14732.00
477963.97	1379554.00	17342.00
477970.22	1379554.25	34882.00
477976.47	1379554.38	20001.00
477751.38	1379554.50	15239.00
477982.72	1379554.50	20980.00
477757.63	1379554.63	17911.00
477763.88	1379554.75	26201.00
477988.97	1379554.75	16306.00
477995.22	1379554.88	9524.00
477770.13	1379555.00	36364.00
478001.44	1379555.00	12606.00
477776.38	1379555.13	18359.00
478007.69	1379555.25	13130.00
477782.63	1379555.38	10001.00
478013.94	1379555.38	14963.00
477788.88	1379555.50	137623.00
477795.09	1379555.63	12527.00
478020.19	1379555.63	30457.00
478026.44	1379555.75	19170.00
477801.34	1379555.88	8646.00
478032.69	1379555.88	28302.00
478038.39	1379556.13	10715.00

5174

TABLE F-15C
(Continued)

Coordinates		Reading (CPM)
North	East	
477401.16	1379557.38	9798.00
477407.41	1379557.50	9934.00
477413.66	1379557.75	8916.00
477419.91	1379557.88	11195.00
477426.16	1379558.13	9757.00
477432.41	1379558.25	9885.00
477438.66	1379558.38	10831.00
477444.91	1379558.63	8001.00
477451.16	1379558.75	8380.00
477457.41	1379558.88	7335.00
477463.66	1379559.13	7854.00
477469.88	1379559.25	6765.00
477926.31	1379559.25	8131.00
477932.56	1379559.38	12296.00
477476.13	1379559.50	8572.00
477482.38	1379559.63	7501.00
477938.81	1379559.63	13216.00
477488.63	1379559.75	6363.00
477945.06	1379559.75	56565.00
477494.88	1379560.00	11882.00
477951.31	1379560.00	20989.00
477501.13	1379560.13	8043.00
477957.56	1379560.13	24591.00
477963.78	1379560.25	36683.00
477970.03	1379560.50	28154.00
477976.28	1379560.63	30643.00
477751.22	1379560.75	14493.00
477982.53	1379560.75	16950.00
477757.44	1379560.88	17046.00
477763.69	1379561.00	17658.00
477988.78	1379561.00	13110.00
477995.03	1379561.13	10170.00
477769.94	1379561.25	12073.00
478001.28	1379561.25	10910.00
477776.19	1379561.38	18529.00
477551.09	1379561.50	10051.00
478007.53	1379561.50	14564.00
477557.34	1379561.63	8298.00
477782.44	1379561.63	15152.00
478013.78	1379561.63	20690.00
477788.69	1379561.75	22472.00
477563.59	1379561.88	8153.00
477794.94	1379561.88	12749.00
478020.03	1379561.88	19355.00

TABLE F-15C
(Continued)

Coordinates		
North	East	Reading (CPM)
477569.84	1379562.00	8811.00
478026.28	1379562.00	22701.00
477576.09	1379562.13	8404.00
477801.19	1379562.13	10811.00
478032.53	1379562.13	17242.00
477926.13	1379565.50	7634.00
477932.38	1379565.63	7939.00
477475.97	1379565.75	7803.00
477482.22	1379565.88	8380.00
477938.63	1379565.88	17143.00
477488.47	1379566.00	8220.00
477944.88	1379566.00	9773.00
477494.72	1379566.25	9274.00
477951.13	1379566.25	12990.00
477500.97	1379566.38	10959.00
477957.38	1379566.38	110910.00
477963.63	1379566.50	137620.00
477969.88	1379566.75	22999.00
477976.13	1379566.88	13836.00
477751.03	1379567.00	19119.00
477982.38	1379567.00	9837.00
477757.28	1379567.13	15916.00
477763.53	1379567.25	20629.00
477988.63	1379567.25	11765.00
477994.88	1379567.38	10715.00
477769.78	1379567.50	17292.00
478001.13	1379567.50	10696.00
477776.03	1379567.63	20906.00
477550.94	1379567.75	8785.00
478007.34	1379567.75	16484.00
477557.19	1379567.88	9203.00
477782.28	1379567.88	17658.00
478013.59	1379567.88	27038.00
477788.53	1379568.00	16667.00
477563.44	1379568.13	9719.00
477794.78	1379568.13	17143.00
478193.84	1379568.13	23256.00
477569.69	1379568.25	8334.00
478026.09	1379568.25	30304.00
477575.94	1379568.38	8824.00
477801.00	1379568.38	15666.00
478032.34	1379568.38	39862.00
477807.25	1379568.50	9105.00
477813.50	1379568.63	9274.00

TABLE F-15C
(Continued)

Coordinates		
North	East	Reading (CPM)
477819.75	1379568.88	9570.00
477826.00	1379569.00	9519.00
477851.00	1379569.75	11977.00
477857.25	1379569.88	10051.00
477863.50	1379570.00	8463.00
477869.75	1379570.25	8808.00
477876.00	1379570.38	9694.00
477925.97	1379571.75	7871.00
477475.78	1379571.88	7529.00
477932.22	1379571.88	8307.00
477482.03	1379572.13	8785.00
477938.47	1379572.13	49181.00
477488.28	1379572.25	8487.00
477944.72	1379572.25	35715.00
477950.97	1379572.38	13761.00
477494.53	1379572.50	8696.00
477500.78	1379572.63	8785.00
477957.22	1379572.63	17046.00
477963.47	1379572.75	17596.00
477969.69	1379573.00	18127.00
477975.94	1379573.13	11076.00
477750.88	1379573.25	12146.00
477982.19	1379573.25	10564.00
477757.13	1379573.38	22901.00
477763.34	1379573.50	19481.00
477988.44	1379573.50	10681.00
477994.69	1379573.63	12196.00
478000.94	1379573.75	11105.00
477775.84	1379573.88	24591.00
477550.78	1379574.00	47254.00
478007.19	1379574.00	15666.00
477100.59	1379574.13	3896.00
477557.00	1379574.13	12171.00
477782.09	1379574.13	21740.00
478013.44	1379574.13	31251.00
477788.34	1379574.25	21989.00
477563.25	1379574.38	8719.00
477794.59	1379574.38	23623.00
478019.69	1379574.38	23810.00
477369.50	1379574.50	8619.00
478025.94	1379574.50	25863.00
477575.75	1379574.63	8523.00
477800.84	1379574.63	26559.00
478032.19	1379574.63	10850.00

TABLE F-15C
(Continued)

Coordinates		
North	East	Reading (CPM)
477807.09	1379574.75	9133.00
477813.34	1379574.88	9175.00
477819.59	1379575.13	8646.00
478050.91	1379575.13	11495.00
477825.84	1379575.25	9050.00
477150.56	1379575.50	4175.00
477850.81	1379576.00	14052.00
477857.06	1379576.13	19058.00
477863.31	1379576.25	18359.00
477869.56	1379576.50	10310.00
477875.81	1379576.63	10870.00
477200.56	1379576.88	4075.00
477925.78	1379578.00	8584.00
477475.63	1379578.13	7833.00
477932.03	1379578.13	10400.00
477250.53	1379578.25	3385.00
477481.88	1379578.38	80220.00
477488.13	1379578.50	9390.00
477944.53	1379578.50	79930.00
477950.78	1379578.63	10280.00
477494.38	1379578.75	8380.00
477500.63	1379578.88	7482.00
477957.03	1379578.88	10788.00
477963.28	1379579.00	51725.00
477969.53	1379579.25	23810.00
477975.78	1379578.38	10990.00
477750.69	1379579.50	9885.00
477982.03	1379579.50	10034.00
477300.53	1379579.63	4434.00
477756.94	1379579.63	16217.00
477763.19	1379579.75	10583.00
477988.28	1379579.75	8939.00
477994.53	1379579.88	10496.00
477769.44	1379580.00	19481.00
478000.78	1379530.00	14706.00
477775.69	1379580.13	24097.00
477550.59	1379580.25	9524.00
478007.03	1379580.25	25975.00
477556.84	1379580.38	9616.00
477781.94	1379580.38	26087.00
478013.25	1379580.38	31251.00
477788.19	1379580.50	38217.00
477563.09	1379580.63	9570.00
477794.44	1379580.63	21829.00

TABLE F-15C
(Continued)

Coordinates		
North	East	Reading (CPM)
478019.50	1379580.63	34306.00
477569.34	1379580.75	8719.00
478025.75	1379580.75	18576.00
477575.59	1379580.88	9519.00
477800.69	1379580.88	20135.00
477350.50	1379581.00	4857.00
477806.91	1379581.00	12632.00
477813.16	1379581.13	13216.00
477819.41	1379581.38	8392.00
477825.66	1379581.50	9133.00
477850.66	1379582.25	9175.00
477400.47	1379582.38	4219.00
477856.91	1379582.38	8772.00
477863.16	1379582.50	22141.00
477869.41	1379582.75	12527.00
477875.66	1379582.88	12346.00
477450.47	1379583.75	5215.00
477925.63	1379584.25	8899.00
477475.44	1379584.38	8734.00
477931.88	1379584.38	11549.00
477481.69	1379584.63	9459.00
477938.13	1379584.63	78330.00
477487.94	1379584.75	9298.00
477950.63	1379584.88	119150.00
477494.19	1379585.00	9129.00
477500.44	1379585.13	9023.00
477500.44	1379585.13	3917.00
477956.88	1379585.13	8876.00
477963.13	1379585.25	13637.00
477969.34	1379585.50	13312.00
477975.59	1379585.63	10345.00
477750.53	1379585.75	10129.00
477981.84	1379585.75	10962.00
477756.78	1379585.88	16807.00
477763.00	1379586.00	17911.00
477988.09	1379586.00	9317.00
477994.34	1379586.13	10490.00
477769.25	1379586.25	12423.00
478000.59	1379586.25	33334.00
477775.50	1379586.38	21053.00
477550.44	1379586.50	8671.00
477550.44	1379586.50	4370.00
478006.84	1379586.50	39216.00
477556.66	1379586.63	9902.00

TABLE F-15C
(Continued)

Coordinates		
North	East	Reading (CPM)
477781.75	1379586.63	25001.00
478013.09	1379586.63	40817.00
477788.00	1379586.75	31915.00
477562.91	1379586.88	8811.00
477794.25	1379586.88	29704.00
478019.34	1379586.88	26602.00
477569.16	1379587.00	9105.00
478025.59	1379587.00	33916.00
477575.41	1379587.13	8220.00
477800.50	1379587.13	19231.00
477806.75	1379587.25	24097.00
477813.00	1379587.38	10153.00
477819.25	1379587.63	7762.00
477825.50	1379587.75	8357.00
477600.41	1379587.88	3945.00
477850.47	1379588.50	12321.00
477856.72	1379588.63	15968.00
477862.97	1379588.75	11905.00
477869.22	1379589.00	19170.00
477875.47	1379589.13	28437.00
477650.38	1379589.25	42171.00
477925.47	1379590.50	8876.00
477700.38	1379590.63	4291.00
477931.69	1379590.63	11877.00
477937.94	1379590.88	31251.00
477944.19	1379591.00	10310.00
477950.44	1379591.13	16043.00
477956.69	1379591.38	9837.00
477962.94	1379591.50	8131.00
477969.19	1379591.75	10787.00
477975.44	1379591.88	12097.00
477750.34	1379592.00	4529.00
477750.34	1379592.00	9741.00
477756.59	1379592.13	10715.00
477762.84	1379592.25	10910.00
477987.94	1379592.25	9405.00
477994.19	1379592.38	16854.00
477769.09	1379592.50	10959.00
478000.44	1379592.50	23292.00
477775.34	1379592.63	10773.00
477781.59	1379592.75	1393.00
478006.69	1379592.75	32619.00
478012.94	1379592.88	20834.00
477787.84	1379593.00	23167.00

TABLE F-15C
(Continued)

Coordinates		
North	East	Reading (CPM)
478019.16	1379593.00	26201.00
477794.09	1379593.13	28170.00
478025.41	1379593.25	16760.00
477800.34	1379593.38	13730.00
477800.34	1379593.38	5785.00
477806.56	1379593.50	15666.00
477812.81	1379593.63	13825.00
477819.06	1379593.88	9585.00
477825.31	1379594.00	13393.00
477831.56	1379594.13	10910.00
477837.81	1379594.38	11268.00
477844.06	1379594.50	15076.00
477850.31	1379594.75	11729.00
477850.31	1379594.75	5841.00
477866.56	1379594.88	26316.00
477862.81	1379595.00	12589.00
477869.06	1379595.25	6773.00
477875.31	1379595.38	6921.00
477900.28	1379596.00	6652.00
477900.28	1379596.00	3524.00
477906.53	1379596.25	6623.00
477912.78	1379596.38	6865.00
477919.03	1379596.63	9694.00
477925.28	1379596.75	8298.00
477931.53	1379596.88	9217.00
477937.78	1379597.13	20067.00
477944.03	1379597.25	8837.00
477950.28	1379597.38	8621.00
477950.28	1379597.38	4503.00
477956.53	1379594.63	10792.00
477962.78	1379597.75	10078.00
477969.03	1379598.00	13849.00
477975.25	1379598.13	9837.00
477981.50	1379598.25	9616.00
477987.75	1379598.50	12245.00
477994.00	1379598.63	21775.00
478000.25	1379598.75	15625.00
478000.25	1379598.75	36810.00
478006.50	1379599.00	44777.00
478012.75	1379599.13	25424.00
478019.00	1379599.25	53106.00
477800.16	1379599.63	20558.00
477806.41	1379599.75	25317.00
477812.66	1379599.88	26432.00

1048

TABLE F-15C
(Continued)

Coordinates		
North	East	Reading (CPM)
477818.91	1379600.13	28719.00
477825.16	1379600.25	11268.00
477831.41	1379600.38	12122.00
477837.66	1379600.63	10078.00
477843.91	1379600.75	20001.00
477850.16	1379601.00	10153.00
477856.38	1379601.13	23530.00
477862.63	1379601.25	9879.00
477868.88	1379601.50	8671.00
477875.13	1379601.63	6829.00
477199.88	1379601.88	8837.00
477206.13	1379602.13	8197.00
477212.38	1379602.25	8449.00
477900.13	1379602.25	6428.00
477906.38	1379602.50	8558.00
477224.88	1379602.63	8684.00
477912.63	1379602.63	9129.00
477918.88	1379602.88	16539.00
477925.13	1379603.00	10017.00
477975.09	1379604.38	11321.00
477981.34	1379604.50	9879.00
477987.59	1379604.75	9792.00
477993.84	1379604.88	22223.00
478000.09	1379605.00	36586.00
478006.34	1379605.25	33334.00
478012.59	1379605.38	40817.00
478018.81	1379605.50	16088.00
477800.00	1379605.88	23448.00
478806.25	1379606.00	41096.00
477812.47	1379606.13	28719.00
477818.72	1379606.38	18692.00
477824.97	1379606.50	16714.00
477831.22	1379606.63	28302.00
477837.47	1379606.88	20834.00
477843.72	1379607.00	13899.00
477849.97	1379607.13	12527.00
477856.22	1379607.38	9064.00
477862.47	1379607.50	10187.00
477868.72	1379607.75	8996.00
477874.97	1379607.88	8760.00
477199.69	1379608.13	9199.00
477205.94	1379608.38	9037.00
477212.19	1379608.50	8916.00
477899.94	1379608.50	8197.00

1049

TABLE F-15C
(Continued)

Coordinates		
North	East	Reading (CPM)
477218.44	1379608.63	8721.00
477906.19	1379608.75	8033.00
477224.69	1379608.88	9147.00
477912.44	1379608.88	10601.00
477918.69	1379609.13	24490.00
477924.94	1379609.25	10170.00
477974.94	1379610.63	11289.00
477981.16	1379610.75	15048.00
477987.41	1379611.00	11396.00
477993.66	1379611.13	20980.00
477999.91	1379611.25	34683.00
9478006.16	1379611.50	22814.00
478012.41	1379611.63	28170.00
477799.81	1379612.13	11112.00
477806.06	1379612.25	23256.00
477812.31	1379612.38	23530.00
477818.56	1379612.63	20203.00
477824.81	1379612.75	6117.00
477831.06	1379612.88	21740.00
477837.31	1379613.13	18938.00
477843.56	1379613.25	15464.00
477849.81	1379613.38	12606.00
477856.03	1379613.63	10518.00
477862.28	1379613.75	8535.00
477868.53	1379614.00	9585.00
477874.78	1379614.13	10363.00
477199.53	1379614.38	8043.00
477205.78	1379614.63	8721.00
477212.03	1379614.75	8298.00
477899.78	1379614.75	9133.00
477218.28	1379614.88	10001.00
477906.03	1379615.00	8379.00
477224.53	1379615.13	8734.00
477912.28	1379615.13	24097.00
477918.53	1379615.38	8760.00
477924.78	1379615.50	7595.00
477974.75	1379616.88	9879.00
477981.00	1379617.00	12184.00
477987.25	1379617.25	20690.00
477993.50	1379617.38	20135.00
477999.75	1379617.50	25211.00
478006.00	1379617.75	48001.00
478012.25	1379617.88	14320.00
477799.66	1379618.38	10363.00

1050

TABLE F-15C
(Continued)

Coordinates		
North	East	Reading (CPM)
477805.91	1379618.50	12321.00
477812.16	1379618.63	23167.00
477818.38	1379618.88	15307.00
477824.63	1379619.00	14128.00
477830.88	1379619.13	18405.00
477837.13	1379619.38	26667.00
477843.38	1379619.50	19281.00
477849.63	1379619.63	16854.00
477855.88	1379619.88	16449.00
477862.13	1379620.00	9091.00
477868.38	1379620.25	8942.00
477847.63	1379620.38	9390.00
477199.34	1379620.63	9494.00
477205.59	1379620.75	8996.00
477211.84	1379621.00	9741.00
477899.59	1379621.00	8684.00
477218.09	1379621.13	15707.00
477905.84	1379621.25	9719.00
477224.34	1379621.38	88890.00
477912.09	1379621.38	15190.00
477918.34	1379621.63	21908.00
477924.59	1379621.75	8309.00
477930.84	1379621.88	8684.00
477937.09	1379622.13	7010.00
477943.34	1379622.25	7793.00
477949.59	1379622.38	10274.00
477955.84	1379622.63	12858.00
477962.09	1379622.72	11584.00
477968.34	1379622.88	12196.00
477974.59	1379623.13	8903.00
477980.84	1379623.25	15088.00
477987.06	1379623.50	17975.00
477993.31	139623.63	55382.00
477999.56	1379623.75	30613.00
478005.81	1379624.00	49181.00
477099.22	1379624.13	4214.00
478012.06	1379624.13	10850.00
477799.47	1379624.50	9967.00
477805.72	1379624.75	11112.00
477811.97	1379624.88	10959.00
477818.22	1379625.13	12998.00
477824.47	1379625.25	20558.00
477149.22	1379625.50	5506.00
477149.22	1379625.50	10910.00

1051

TABLE F-15C
(Continued)

Coordinates		
North	East	Reading (CPM)
477155.47	1379625.75	10564.00
477161.69	1379625.88	11386.00
477849.47	1379625.88	14493.00
477167.94	1379626.00	11696.00
477855.72	1379626.13	12858.00
477174.19	1379626.25	13304.00
477861.94	1379626.25	9741.00
477180.44	1379626.38	13334.00
477186.69	1379626.50	9231.00
477868.19	1379626.50	8808.00
477874.44	1379626.63	9662.00
477192.94	1379626.75	13606.00
477199.19	1379626.88	11617.00
477199.19	1379626.88	30613.00
477205.44	1379627.00	13334.00
477211.69	1379627.25	32269.00
477899.44	1379627.25	9088.00
477217.94	1379627.38	13168.00
477905.69	1379627.50	8054.00
477224.19	1379627.63	42254.00
477911.94	1379627.63	10696.00
477230.44	1379627.75	8108.00
477918.19	1379627.75	168070.00
477236.69	1379627.88	9064.00
477924.44	1379628.00	16950.00
477242.91	1379628.13	8684.00
477930.69	1379628.13	8824.00
477249.16	1379628.25	4397.00
477249.16	1379628.25	8357.00
477936.94	1379628.38	7101.00
477943.16	1379628.50	8754.00
477949.41	1379628.63	11035.00
477955.66	1379628.88	9837.00
477961.91	1379629.00	10870.00
477968.16	1379629.13	7026.00
477974.41	1379629.38	12241.00
477980.66	1379629.50	23623.00
477299.16	1379629.63	3982.00
477986.91	1379629.75	15346.00
477993.16	1379629.88	33718.00
477999.41	1379630.00	41969.00
478005.66	1379630.25	31099.00
477799.31	1379630.75	10831.00
477349.13	1379631.00	4462.00

1052

TABLE F-15C
(Continued)

Coordinates		
North	East	Reading (CPM)
477805.56	1379631.00	9601.00
477811.81	1379631.13	9741.00
477818.06	1379631.38	10527.00
477824.28	1379631.50	13130.00
477149.03	1379631.75	11010.00
477155.28	1379632.00	9050.00
477161.53	1379632.13	14670.00
477849.28	1379632.13	10792.00
477167.78	1379632.25	322814.00
477899.13	1379632.38	4403.00
447855.53	1379632.38	12220.00
477974.25	1379635.63	27273.00
477980.50	1379635.75	44171.00
477986.72	1379636.00	43489.00
477992.97	1379636.13	36145.00
477999.22	1379636.25	43489.00
478005.47	1379636.50	4099.00
478005.47	1379636.50	16667.00
477799.13	1379637.00	9928.00
477805.38	1379637.25	9647.00
477811.63	1379637.38	10792.00
477817.88	1379637.63	11451.00
477824.13	1379637.75	12270.00
477559.03	1379637.88	4179.00
477148.88	1379638.00	12794.00
477155.13	1379638.13	11386.00
477161.34	1379638.38	6865.00
477849.13	1379638.38	12904.00
477167.59	1379638.50	18405.00
477855.38	1379638.63	9246.00
477173.84	1379638.75	356586.00
477861.63	1379638.75	9064.00
477180.09	1379638.88	33909.00
477186.34	1379639.00	27408.00
477867.84	1379639.00	11651.00
477874.09	1379639.13	10601.00
477192.59	1379639.25	27273.00
477649.03	1379639.25	4444.00
477198.84	1379639.38	9967.00
477205.09	1379639.50	9231.00
477211.34	1379639.75	9105.00
477899.09	1379639.75	10051.00
477905.34	1379640.00	7529.00
477223.84	1379640.13	8345.00

1053

TABLE F-15C
(Continued)

Coordinates		
North	East	Reading (CPM)
477911.59	1379640.13	16621.00
477230.09	1379640.25	8311.00
477917.84	1379640.25	14468.00
477236.34	1379640.38	8487.00
477924.09	1379640.50	258630.00
477242.59	1379640.63	9317.00
477699.00	1379640.63	4513.00
477930.34	1379640.63	11798.00
477248.81	1379640.75	8942.00
477936.59	1379640.88	10753.00
477942.84	1379641.00	10583.00
477949.06	1379641.13	11765.00
477955.31	1379641.38	9585.00
477961.56	1379641.50	17143.00
477697.81	1379641.63	27207.00
477748.97	1379641.88	4680.00
477974.06	1379641.88	35295.00
477980.31	1379642.00	42254.00
477986.56	1379642.13	32357.00
477992.81	1379642.38	34091.00
477999.06	1379642.50	22999.00
477798.97	1379643.24	9494.00
477798.97	1379643.25	4916.00
477805.22	1379643.50	9879.00
477811.47	1379643.63	9555.00
477817.72	1379643.88	11236.00
477823.94	1379644.00	12669.00
477148.69	1379644.25	12397.00
477154.94	1379644.38	12220.00
477161.19	1379644.63	9105.00
477848.94	1379644.63	8087.00
477848.94	1379644.63	17342.00
477167.44	1379644.75	8076.00
477855.19	1379644.88	8983.00
477173.69	1379645.00	30001.00
477861.44	1379645.00	10990.00
477179.94	1379645.13	51283.00
477867.69	1379645.13	9934.00
477186.19	1379645.25	28302.00
477873.94	1379645.38	9317.00
477192.44	1379645.50	9434.00
477198.69	1379645.63	8334.00
477204.91	1379645.75	8379.00
477211.16	1379646.00	10017.00

1054

5174

TABLE F-15C
(Continued)

Coordinates		
North	East	Reading (CPM)
477898.94	1379646.00	5262.00
477898.94	1379646.00	10153.00
477217.41	1379646.13	8220.00
477905.19	1379646.25	9741.00
477223.66	1379646.38	8719.00
477911.41	1379646.38	19618.00
477229.91	1379646.50	8721.00
477917.66	1379646.50	13857.00
477236.16	1379646.63	9199.00
477923.91	1379646.75	20135.00
477242.41	1379646.88	9719.00
477930.16	1379646.88	17848.00
477248.66	1379647.00	8808.00
477936.41	1379647.13	10298.00
477942.66	1379647.25	11799.00
477948.91	1379647.38	6177.00
477948.91	1379647.38	10417.00
477955.16	1379647.63	8983.00
477961.41	1379647.75	21740.00
477967.66	1379647.88	31251.00
477973.91	1379648.13	34568.00
477980.16	1379648.25	27273.00
477986.41	1379648.38	43489.00
477992.63	1379648.63	23077.00
477998.88	1379648.75	13840.00
477148.53	1379650.50	13246.00
477154.78	1379650.63	12712.00
477161.03	1379650.88	9175.00
477167.25	1379651.00	7864.00
477173.50	1379651.25	8131.00
477179.75	1379651.38	8033.00
477186.00	1379651.50	7844.00
477192.25	1379651.75	5587.00
477198.50	1379651.88	7895.00
477204.75	1379652.00	8785.00
477211.00	1379652.25	9524.00
477898.75	1379652.25	9274.00
477217.25	1379652.38	8696.00
477905.00	1379652.50	9804.00
477223.50	1379652.63	8584.00
477911.25	1379652.63	14493.00
477229.75	1379652.75	9217.00
477917.50	1379652.75	9549.00
477236.00	1379652.88	8983.00

1055

TABLE F-15C
(Continued)

Coordinates		
North	East	Reading (CPM)
477923.75	1379653.00	30462.00
477242.25	1379653.13	8696.00
477930.00	1379653.13	9902.00
477248.47	1379653.25	8719.00
477936.25	1379653.88	8404.00
477942.50	1379653.50	7043.00
477948.75	1379653.63	9298.00
477954.97	1379653.88	9879.00
477961.22	1379654.00	21908.00
477697.47	1379654.13	32978.00
477973.72	1379654.38	30984.00
477979.97	1379654.50	27523.00
477986.22	1379654.63	16305.00
477992.47	1379654.88	8153.00
477898.59	1379658.50	8646.00
477904.84	1379658.75	8404.00
477911.09	1379658.88	7654.00
477917.31	1379659.00	10001.00
477923.56	1379659.25	11071.00
477929.81	1379659.38	9421.00
477929.81	1379659.38	9421.00
477936.06	1379659.50	8175.00
477942.31	1379659.75	8721.00
477948.56	1379659.88	7654.00
477954.81	1379660.13	16216.00
477961.06	1379660.25	18332.00
477967.31	1379660.38	26071.00
477973.56	1379660.63	34132.00
477979.81	1379660.75	21439.00
477986.06	1379660.88	9129.00
477992.31	1379661.13	10205.00
477898.41	1379664.75	8734.00
477904.66	1379665.00	8416.00
477910.91	1379665.13	9260.00
477917.16	1379665.25	8572.00
477923.41	1379665.50	14852.00
477929.66	1379665.63	9010.00
477935.91	1379665.75	8899.00
477942.16	1379666.00	6798.00
477948.41	1379666.13	8519.00
477954.66	1379666.38	10870.00
477960.88	1379666.50	13762.00
477967.13	1379666.63	27273.00
477973.38	1379666.88	18293.00

5174

TABLE F-15C
(Continued)

Coordinates		
North	East	Reading (CPM)
477979.63	1379667.00	15968.00
477985.88	1379667.13	9647.00
477992.13	1379667.38	13825.00
477898.25	1379671.00	9037.00
477904.50	1379671.25	9662.00
477910.75	1379671.38	8684.00
477916.97	1379671.50	9203.00
477923.22	1379671.75	10153.00
477929.47	1379671.88	10130.00
477935.72	1379672.00	7968.00
477941.97	1379672.25	5820.00
477948.22	1379672.38	7916.00
477954.47	1379672.63	11105.00
477960.72	1379672.75	18998.00
477966.97	1379672.88	31546.00
477973.22	1379673.13	31251.00
477979.47	1379673.25	8451.00
477985.72	1379673.38	11631.00
477097.84	1379674.13	3001.00
477147.84	1379675.50	4110.00
477197.81	1379676.88	2958.00
477948.06	1379678.63	9376.00
477954.31	1379678.88	11163.00
477960.53	1379679.00	20271.00
477966.78	1379678.13	31575.00
477973.03	1379679.38	49181.00
477979.28	1379678.50	9346.00
477985.53	1379679.63	24794.00
482168.31	1379681.63	17485.00
477397.75	1379682.38	3901.00
477447.72	1379683.75	4162.00
477947.88	1379684.88	12196.00
477497.72	1379685.13	3904.00
477654.13	1379685.13	11638.00
477960.38	1379685.25	21725.00
477966.63	1379685.38	35945.00
477972.88	1379685.63	34560.00
477985.38	1379685.88	31589.00
477547.69	1379686.50	4410.00
477597.66	1379687.88	4317.00
477647.66	1379689.13	4235.00
477697.63	1379690.50	4342.00
477947.72	137969.18	11638.00
477953.97	1379691.38	18182.00

1057

TABLE F-15C
(Continued)

Coordinates		
North	East	Reading (CPM)
477960.22	1379691.50	45802.00
477966.44	1379691.63	59407.00
477747.63	1379691.88	4323.00
477972.69	1379691.88	46154.00
477978.94	1379692.00	17752.00
477797.59	1379693.25	4517.00
477847.56	1379694.63	5351.00
477872.56	1379695.38	10472.00
477878.81	1379695.50	10668.00
477885.06	1379695.63	10490.00
477891.31	1379695.88	9719.00
477897.56	1379696.00	9741.00
477897.56	1379696.00	4283.00
477947.53	1379697.38	6342.00
477947.53	1379697.38	10381.00
477953.78	1379697.50	12749.00
477960.03	1379697.75	44777.00
477966.28	1379697.88	68810.00
477972.53	1379698.13	29704.00
477978.78	1379698.25	68810.00
477872.41	1379701.63	11606.00
477878.66	1379701.75	11174.00
477884.91	1379701.88	10034.00
477891.13	1379702.13	10001.00
477897.38	1379702.00	10249.00
477947.38	1379703.63	14048.00
477953.63	1379703.75	13899.00
477959.88	1379704.00	55720.00
477966.13	1379704.13	46098.00
477978.59	1379704.50	30304.00
477872.22	1379707.88	10583.00
477878.47	1379708.00	9161.00
477884.72	1379708.13	10292.00
477890.97	1379708.38	9390.00
477897.22	1379708.50	9773.00
477947.19	1379709.88	23077.00
477953.44	1379710.00	15239.00
477959.69	1379710.25	42254.00
477965.94	1379710.38	36145.00
477972.19	1379710.63	54546.00
477978.44	1379710.75	15385.00
477872.06	1379714.13	9837.00
477878.31	1379714.25	10129.00
477884.56	1379714.38	9741.00

1958

5174

TABLE F-15C
(Continued)

Coordinates		
North	East	Reading (CPM)
477890.78	1379714.63	8511.00
477897.03	1379714.75	9376.00
477947.03	1379716.13	12459.00
477953.28	1379716.25	27788.00
477959.53	1379716.50	41737.00
477972.03	1379716.88	75950.00
477796.91	1379718.25	10527.00
477803.16	1379718.50	10518.00
477809.41	1379718.63	11050.00
477815.66	1379718.75	9549.00
477821.91	1379719.00	10244.00
477871.88	1379720.38	9741.00
477878.13	1379720.50	10518.00
477884.38	1379720.63	11439.00
477890.63	1379720.88	15076.00
477896.88	1379721.00	12001.00
477903.13	1379721.13	10249.00
477909.38	1379721.38	9967.00
477915.63	1379721.50	13825.00
477921.88	1379721.75	11132.00
477928.13	1379721.88	11132.00
477934.34	1379722.00	13364.00
477940.59	1379722.25	15626.00
477946.84	1379722.38	13101.00
477953.09	1379722.50	21494.00
477959.34	1379722.75	33296.00
477971.84	1379723.13	29736.00
477071.50	1379723.38	9885.00
477077.75	1379723.63	9199.00
477084.00	1379723.75	10409.00
477090.25	1379724.00	11030.00
477096.50	1379724.13	9662.00
477096.50	1379724.13	10158.00
477796.75	1379724.50	11939.00
477803.00	1379724.75	10274.00
477809.25	1379724.88	13423.00
477815.47	1379725.00	15504.00
477871.72	1379726.63	10979.00
477877.97	1379726.75	8956.00
477884.22	1379726.88	11939.00
477890.47	1379727.13	14085.00
477896.69	1379727.25	13794.00
477902.94	1379727.38	16001.00
477909.19	1379727.63	12025.00

TABLE F-15C
(Continued)

Coordinates		
North	East	Reading (CPM)
477915.44	1379727.75	14355.00
477921.69	1379728.00	10222.00
477927.94	1379728.13	13637.00
477934.19	1379728.25	18751.00
477940.44	1379728.50	27650.00
477946.69	1379728.63	13275.00
477952.94	1379728.75	27611.00
477959.19	1379729.00	41667.00
477971.69	1379729.25	17753.00
477796.56	1379730.75	16854.00
477802.81	1379731.00	13246.00
477809.06	1379731.13	11606.00
477815.31	1379731.25	10085.00
477821.56	1379731.50	10170.00
477871.53	1379732.88	10136.00
477877.78	1379733.00	9741.00
477884.03	1379733.13	9879.00
477890.28	1379733.38	10409.00
477896.53	1379733.50	14743.00
477940.44	1379728.50	27650.00
477946.69	1379728.63	13275.00
477952.94	1379728.75	27611.00
477959.19	1379729.00	41667.00
477971.69	1379729.25	17753.00
477902.78	1379733.63	18248.00
477909.03	1379733.88	11236.00
477915.28	1379734.00	10381.00
477921.53	1379734.25	11343.00
477927.78	1379734.38	10454.00
477934.03	1379734.50	18540.00
477940.25	1379734.75	20067.00
477946.50	1379734.88	19618.00
477496.34	1379735.00	4134.00
477952.75	1379735.00	29885.00
477959.00	1379735.00	29704.00
477546.31	1379736.38	4261.00
477796.41	1379737.00	10850.00
477802.66	1379737.25	11174.00
477808.91	1379737.37	11977.00
477815.13	1379737.50	10435.00
477596.31	1379737.75	3363.00
477821.38	1379737.75	9820.00
477646.28	1379739.13	4110.00
477871.38	1379739.13	10753.00

5174

TABLE F-15C
(Continued)

Coordinates		
North	East	Reading (CPM)
477877.63	1379739.25	10001.00
477883.88	1379739.38	9064.00
477890.13	1379739.63	9175.00
477896.38	1379739.75	17752.00
477902.59	1379739.88	13393.00
477908.84	1379740.13	16902.00
477915.09	1379740.25	9549.00
477696.25	1379740.50	4789.00
477921.34	1379740.50	8684.00
477927.59	1379740.63	13453.00
477933.84	1379740.75	27150.00
477940.09	1379741.00	13072.00
477946.34	1379741.13	18998.00
477952.59	1379741.25	30938.00
477746.25	1379741.88	4213.00
477796.22	1379743.25	4796.00
477796.22	1379743.25	9303.00
477802.47	1379743.50	9885.00
477808.72	1379743.63	11300.00
477814.97	1379743.75	9662.00
477821.22	1379744.00	10136.00
477871.19	1379745.38	10310.00
477877.44	1379745.50	9023.00
477883.69	1379745.63	9601.00
477889.94	1379745.88	10222.00
477896.19	1379746.00	11132.00
477896.19	1379746.00	5018.00
477908.69	1379746.38	40541.00
477914.94	1379796.50	19803.00
477921.19	1379746.63	10508.00
477927.44	1379746.88	14928.00
477933.69	1379747.00	46592.00
477939.94	1379747.25	26599.00
477946.16	1379747.38	25404.00
477946.16	1379747.38	11953.00
477952.41	1379747.50	19481.00
477964.91	1379747.88	17316.00
477996.16	1379748.75	5043.00
477877.28	1379751.75	14670.00
477883.53	1379751.88	10078.00
477889.78	1379752.13	9298.00
477896.03	1379752.25	10381.00
477902.28	1379752.38	13304.00
477908.50	1379752.63	14743.00

1061

TABLE F-15C
(Continued)

Coordinates		
North	East	Reading (CPM)
477914.75	1379752.75	10017.00
477921.00	1379752.88	9741.00
477927.25	1379753.13	21277.00
477933.50	1379753.25	24516.00
477939.75	1379753.50	21583.00
477946.00	1379753.63	21277.00
477952.25	1379753.75	15385.00
477964.75	1379754.13	12712.00
477870.84	1379757.88	9219.00
477877.09	1379758.00	10773.00
477883.34	1379758.13	20340.00
477889.59	1379758.38	12553.00
477895.84	1379758.50	10417.00
477902.09	1379758.63	11812.00
477908.34	1379758.88	12632.00
477914.59	1379759.00	15626.00
477920.84	1379759.13	18998.00
477927.09	1379759.38	36965.00
477933.34	1379759.50	33150.00
477939.59	1379759.75	22305.00
477945.84	1379759.88	26087.00
477952.06	1379760.00	25424.00
477964.56	1379760.38	9010.00
477870.69	1379764.00	8621.00
477876.94	1379764.25	11082.00
477889.44	1379764.63	14743.00
477895.69	1379764.75	9694.00
477901.94	1379764.88	9464.00
477908.16	1379765.13	15152.00
477914.41	1379765.25	13857.00
477920.66	1379765.38	68810.00
477926.91	1379765.63	46876.00
477933.16	1379765.75	35715.00
477939.41	1379766.00	14887.00
477945.66	1379766.13	28302.00
477951.91	1379766.25	20834.00
477958.16	1379766.50	23905.00
477170.25	1379769.88	12296.00
477858.03	1379770.00	7454.00
477176.50	1379770.13	13044.00
477864.28	1379770.13	9519.00
477883.19	1379764.38	18998.00
477870.50	1379770.25	8903.00
477876.75	1379770.50	8811.00

1062

ID 5174

TABLE F-15C
(Continued)

Coordinates		
North	East	Reading (CPM)
477883.00	1379770.63	12097.00
477889.25	1379770.88	21353.00
477895.50	1379771.00	14635.00
477901.75	1379771.13	9555.00
477908.00	1379771.38	10417.00
477914.25	1379771.50	34483.00
477920.50	1379771.63	36586.00
477926.75	1379771.88	46154.00
477933.00	1379772.00	28572.00
477939.25	1379772.25	15048.00
477945.50	1379772.38	22901.00
477957.97	1379772.75	14762.00
477845.34	1379775.88	9217.00
477851.59	1379776.00	12059.00
477857.84	1379776.25	8076.00
477864.09	1379776.38	7409.00
477870.34	1379776.50	7567.00
477895.34	1379777.25	14789.00
477901.59	1379777.38	10620.00
477907.84	1379777.63	11868.00
477914.06	1379777.75	25532.00
477920.31	1379777.88	64310.00
477926.56	1379778.00	31589.00
477932.81	1379778.25	28847.00
477939.06	1379778.50	18293.00
477945.31	1379778.63	28179.00
477957.81	1379779.00	13899.00
477845.19	1379782.13	9420.00
477851.44	1379782.25	13825.00
477857.69	1379782.50	20558.00
477863.94	1379782.63	7605.00
477870.19	1379782.75	7783.00
477895.16	1379783.50	13240.00
477901.41	1379783.63	13044.00
477907.66	1379783.88	12097.00
477913.91	1379784.00	52174.00
477920.16	1379784.13	58824.00
477926.41	1379784.38	48398.00
477932.66	1379784.50	23488.00
477938.91	1379784.63	13423.00
477945.16	1379784.88	25001.00
477957.63	1379785.25	14268.00
477845.00	1379788.38	1063 8983.00
477851.25	1379788.50	12073.00

TABLE F-15C
(Continued)

Coordinates		
North	East	Reading (CPM)
477857.50	1379788.75	20629.00
477863.75	1379788.88	9203.00
477870.00	1379783.00	13275.00
477644.91	1379789.13	4601.00
477895.00	1379789.75	10990.00
477901.25	1379789.88	22814.00
477907.50	1379790.13	27038.00
477913.75	1379790.25	47620.00
477919.97	1379790.38	54546.00
477694.91	1379790.50	4575.00
477926.22	1379790.63	67120.00
477932.47	1379790.75	20834.00
477938.72	1379790.88	15385.00
477944.97	1379791.13	21908.00
477957.47	1379791.50	9662.00
477744.88	1379791.88	4453.00
477794.84	1379793.25	4398.00
477844.84	1379794.63	4211.00
477844.84	1379794.63	8903.00
477851.09	1379794.75	9967.00
477857.34	1379795.00	8876.00
477863.59	1379795.13	8939.00
477869.84	1379795.25	10345.00
477876.09	1379795.50	11364.00
477882.31	1379795.63	12001.00
477888.56	1379795.88	10939.00
477894.81	1379796.00	5340.00
477894.81	1379796.00	11584.00
477901.06	1379796.13	17493.00
477907.31	1379796.38	39474.00
477913.56	1379796.50	38462.00
477919.81	1379796.63	44128.00
477926.06	1379796.88	46876.00
477932.31	1379797.00	20609.00
477938.56	1379797.13	15307.00
477944.81	1379797.38	7363.00
477944.81	1379797.38	17143.00
477869.66	1379801.50	10257.00
477875.91	1379801.75	11561.00
477882.16	1379801.88	11798.00
477888.41	1379802.00	12321.00
477894.66	1379802.25	10310.00
477900.91	1379802.38	11236.00
477907.16	1379802.63	13072.00

1064

5174

TABLE F-15C
(Continued)

Coordinates		
North	East	Reading (CPM)
477913.41	1379802.75	24292.00
477919.66	1379802.88	35295.00
477925.88	1379803.13	35295.00
477932.13	1379803	16506.00
477938.38	1379803.38	12821.00
477944.63	1379803.63	14493.00
477869.50	1379807.75	11268.00
477875.75	1379808.00	13637.00
477881.97	1379808.13	14029.00
477888.22	1379808.25	15790.00
477894.47	1379808.50	10990.00
477900.72	1379808.63	12998.00
477906.97	1379808.88	10222.00
477913.22	1379809.00	10564.00
477919.47	1379809.13	14926.00
477925.72	1379809.38	23810.00
477931.97	1379809.50	14060.00
477938.22	1379809.63	19777.00
477944.47	1379809.88	13825.00
477869.31	1379814.00	11091.00
477881.81	1379814.38	13545.00
477888.06	1379814.50	23347.00
477894.31	1379814.75	19355.00
477900.56	1379814.88	9688.00
477906.81	1379815.13	10085.00
477913.06	1379815.25	9231.00
477919.31	1379815.38	11300.00
477694.22	1379815.50	9105.00
477700.47	1379815.63	7773.00
477925.53	1379815.63	8808.00
477931.78	1379815.75	14182.00
477706.72	1379815.88	8979.00
477938.03	1379815.88	18376.00
477712.97	1379816.00	9434.00
477719.19	1379816.13	9688.00
477944.28	1879816.13	14320.00
477794.19	1379818.25	9967.00
477800.44	1379818.38	10034.00
477806.66	1379818.63	12932.00
477812.91	1379818.75	10564.00
477819.16	1379818.88	12372.00
477825.41	1379819.13	17911.00
477831.66	1379819.25	9161.00
477837.91	1379819.38	11674.00

1065

TABLE F-15C
(Continued)

Coordinates		
North	East	Reading (CPM)
477844.16	1379819.63	9662.00
477850.41	1379819.75	9217.00
477856.66	1379820.00	10222.00
477862.91	1379820.13	13334.00
477869.16	1379820.25	11321.00
477875.41	1379820.50	11195.00
477881.66	1379820.63	11343.00
477887.88	1379820.75	14743.00
477894.13	1379821.00	12059.00
477900.38	1379821.13	11268.00
477906.63	1379821.38	10102.00
477912.88	1379821.50	8996.00
477919.13	1379821.63	19223.00
477925.38	1379821.88	11729.00
477931.63	1379822.00	8747.00
477937.88	1379822.13	8939.00
477712.78	1379822.25	10051.00
477719.03	1379822.38	9804.00
477037.53	1379822.50	8719.00
477794.00	1379824.50	16394.00
477800.25	1379824.63	15278.00
477806.50	1379824.88	16575.00
477812.75	1379825.00	27038.00
477819.00	1379825.13	34483.00
477825.25	1379825.38	33150.00
477831.50	1379825.50	22999.00
477837.75	1379825.63	20516.00
477844.00	1379825.88	8511.00
477850.22	1379826.00	8076.00
477856.47	1379826.25	9662.00
477862.72	1379826.38	11939.00
477868.97	1379826.50	15626.00
477875.22	1379826.75	12686.00
477881.47	1379826.88	19170.00
477887.72	1379827.00	10990.00
477893.97	1379827.25	10715.00
477900.22	1379827.38	9175.00
477906.47	1379827.63	10292.00
477912.72	1379827.75	9570.00
477918.97	1379827.88	23677.00
477925.22	1379828.13	12749.00
477931.44	1379828.25	9662.00
477937.69	1379828.25	12162.00
477943.94	1379828.63	16575.00

1966

TABLE F-15C
(Continued)

Coordinates		
North	East	Reading (CPM)
477793.84	1379830.75	10292.00
477800.09	1379830.88	10696.00
477806.31	1379831.13	12296.00
477812.56	1379831.25	17442.00
477818.81	1379831.38	20906.00
477825.06	1379831.63	22557.00
477831.31	1379831.75	29279.00
477837.56	1379831.88	28302.00
477843.81	1379832.13	13987.00
477850.06	1379832.25	8451.00
477856.31	1379832.50	10409.00
477862.56	1379832.63	15759.00
477868.81	1379832.75	19803.00
477875.06	1379833.00	12932.00
477881.31	1379833.13	13393.00
477887.56	1379833.25	11174.00
477893.78	1379833.50	21583.00
477900.03	1379833.63	16760.00
477906.28	1379833.75	11561.00
477912.53	1379834.00	11236.00
477918.78	1379834.13	19428.00
477925.03	1379834.38	17046.00
477931.28	1379834.50	10102.00
477937.53	1379834.63	13453.00
477943.78	1379834.88	16575.00
477793.66	1379837.00	13762.00
477799.91	1379837.13	10583.00
477806.16	1379837.38	15239.00
477812.41	1379837.50	13575.00
477818.66	1379837.63	15790.00
477824.91	1379837.88	18529.00
477831.16	1379838.00	17095.00
477837.41	1379838.13	22901.00
477843.66	1379838.38	34091.00
477849.88	1379838.50	27650.00
477856.13	1379838.75	22738.00
477862.38	1379838.88	18998.00
477868.63	1379839.00	16043.00
477874.88	1379839.25	11473.00
477881.13	1379839.38	25752.00
477887.38	1379839.50	18073.00
477893.63	1379839.75	13364.00
477899.88	1379839.88	13334.00
477906.13	1379840.00	14670.00

1067

TABLE F-15C
(Continued)

Coordinates		
North	East	Reading (CPM)
477912.38	1379840.25	23716.00
477918.63	1379840.38	11199.00
477924.88	1379840.63	9519.00
477931.13	1379840.75	9694.00
477937.34	1379840.88	14320.00
477943.59	1379841.13	17965.00
477793.50	1379843.25	4651.00
477793.50	1379843.25	9064.00
477799.75	1379843.38	14399.00
477806.00	1379843.63	14355.00
477812.22	1379843.75	12553.00
477818.47	1379843.88	19737.00
477824.72	1379844.13	15634.00
477837.22	1379844.38	17544.00
477843.47	1379844.63	16130.00
477843.47	1379844.63	9129.00
477849.72	1379844.75	37501.00
477855.97	1379845.00	25105.00
477862.22	1379845.13	19058.00
477868.47	1379845.25	13044.00
477874.72	1379845.50	18576.00
477880.97	1379845.63	17242.00
477887.22	1379845.75	13922.00
477893.47	1379846.00	16001.00
477893.47	1379846.00	7292.00
477899.69	1379846.13	14085.00
477905.94	1379846.25	20558.00
477912.19	1379846.50	23516.00
477918.44	1379846.63	13825.00
477924.69	1379846.88	11091.00
477930.94	1379847.00	10939.00
477937.19	1379847.13	13159.00
477943.44	1379847.38	9657.00
477943.44	1379847.38	21260.00
477793.31	1379849.50	12059.00
477805.81	1379849.88	8951.00
477812.06	1379850.00	10085.00
477818.31	1379850.13	16305.00
477824.56	1379850.38	15385.00
477830.81	1379850.50	16130.00
477837.06	1379850.63	15790.00
477843.31	1379850.88	17752.00
477849.56	1379851.00	20558.00
477855.78	1879851.13	22557.00

1068

TABLE F-15C
(Continued)

Coordinates		
North	East	Reading (CPM)
477862.03	1379851.38	19428.00
477868.28	1379851.50	17392.00
477874.53	1379851.75	11765.00
477880.78	1379851.88	12821.00
477887.03	1379852.00	13423.00
477899.53	1379852.38	27788.00
477905.78	1379852.50	33150.00
477912.03	1379852.75	27523.00
477918.28	1379852.88	17008.00
477924.53	1379853.13	15239.00
477930.78	1379853.25	14088.00
477937.00	1379853.38	10597.00
477943.25	1379853.63	17143.00
477805.66	1379856.13	10205.00
477811.91	1379856.25	11674.00
477818.13	1379856.38	11429.00
477824.38	1379856.63	10773.00
477830.63	1379856.75	12146.00
477836.88	1379856.88	16359.00
477843.13	1379857.13	21829.00
477849.38	1379857.25	12876.00
477855.63	1379857.38	12669.00
477861.88	1379857.63	23347.00
477868.13	1379857.75	17965.00
477874.38	1379858.00	21506.00
477880.63	1379858.13	20340.00
477886.88	1379858.25	24692.00
477893.13	1379858.50	25317.00
477899.34	1379858.63	25221.00
477905.59	1379858.75	36364.00
477911.84	1379859.00	27918.00
477918.09	1379859.13	33970.00
477924.34	1379859.38	19618.00
477930.59	1379859.50	17143.00
477936.84	1379859.63	10792.00
477943.09	1379859.88	12699.00
477092.72	1379861.63	11584.00
477811.72	1379862.50	10435.00
477817.97	1379862.63	10490.00
477824.22	1379862.88	10085.00
477830.47	1379863.00	10959.00
477836.72	1379863.13	10187.00
477842.97	1379863.38	10518.00
477849.22	1379863.50	10959.00

5174

TABLE F-15C
(Continued)

Coordinates		
North	East	Reading (CPM)
477855.47	1379863.63	17095.00
477861.69	1379863.88	22399.00
477867.94	1379864.00	12073.00
477874.19	1379864.25	14789.00
477880.44	1379864.38	20558.00
477886.69	1379864.50	21829.00
477892.94	1379864.75	24194.00
477899.19	1379864.88	30938.00
477905.44	1379865.00	36586.00
477911.69	1379865.25	43166.00
477917.94	1379865.38	38462.00
477924.19	1379865.63	22069.00
477930.44	1379865.75	12413.00
477936.69	1379865.88	14171.00
477942.91	1379866.13	9696.00
477836.53	1379869.38	10435.00
477842.78	1379869.63	9616.00
477849.03	1379869.75	12220.00
477855.28	1379869.88	10734.00
477861.53	1379870.13	11071.00
477867.78	1379870.25	11977.00
477874.03	1379870.50	16001.00
477880.28	1379870.63	21506.00
477886.53	1379870.75	17544.00
477892.78	1379871.00	23810.00
477899.03	1379871.13	30151.00
477905.25	1379871.25	35098.00
477911.50	1379871.50	44445.00
477917.75	1379871.63	38462.00
477924.00	1379871.75	31589.00
477930.25	1379872.00	18819.00
477936.50	1379872.13	25401.00
477942.75	1379872.38	11765.00
477867.59	1379876.50	14564.00
477873.84	1379876.75	10792.00
477880.09	1379876.88	11905.00
477886.34	1379877.00	16305.00
477892.59	1379877.25	18692.00
477898.84	1379877.38	20203.00
477905.09	1379877.50	28719.00
477911.34	1379877.75	24490.00
477917.59	1379877.88	28302.00
477923.84	1379878.00	26786.00
477930.09	1379878.25	23448.00

1070

TABLE F-15C
(Continued)

Coordinates		
North	East	Reading (CPM)
477936.34	1379878.38	21266.00
477942.59	1379878.63	16305.00
477873.69	1379883.00	8619.00
477879.94	1379883.13	13606.00
477892.44	1379883.50	13637.00
477898.69	1379883.63	15759.00
477904.94	1379883.75	15152.00
477911.16	1379884.00	15425.00
477917.41	1379884.13	15968.00
477923.66	1379884.25	20558.00
477936.16	1379884.63	14852.00
477942.41	1379884.88	16575.00
477492.25	1379885.00	8003.00
477879.75	1379889.38	9260.00
477886.00	1379889.50	8011.00
477892.24	1379889.75	9088.00
477898.50	1379889.88	12527.00
477904.75	1379890.00	15152.00
477911.00	1379890.25	13453.00
477917.25	1379890.38	15790.00
477923.50	1379890.50	13825.00
477929.75	1379890.75	13987.00
477936.00	1379890.88	10959.00
477892.09	1379896.00	9570.00
477898.34	1379896.13	9951.00
477904.59	1379896.25	9928.00
477910.84	1379896.50	12245.00
477917.06	1379896.63	9740.00
477923.31	1379896.75	13334.00
477929.56	1379897.00	11765.00
477004.06	1379902.88	11145.00

1071

TABLE F-15D

SOUTH FIELD
CIS EXPOSURE RATE MEASUREMENTS
OPERABLE UNIT 2 REMEDIAL INVESTIGATION
FERNALD ENVIRONMENTAL MANAGEMENT PROJECT

Coordinates		
North	East	Reading (microR/HR)
477804.44	1379443.38	12.00
477898.94	1379646.00	12.00
477804.44	1379443.38	13.69
477898.94	1379646.00	14.25
477909.88	1379246.25	14.44
477510.03	1379235.25	14.02
477310.09	1379229.75	14.48
477904.41	1379446.13	14.08
477704.47	1379440.63	14.06
477699.00	1379640.63	14.02
477499.06	1379635.13	13.94
477299.16	1379629.63	13.90
477099.22	1379624.13	13.74
477893.47	1379846.00	15.66
477693.53	1379840.50	13.94

5174

TABLE F-15E

SOUTH FIELD
CIS BETA GAMMA DOSE RATE MEASUREMENTS
OPERABLE UNIT 2 REMEDIAL INVESTIGATION
FERNALD ENVIRONMENTAL MANAGEMENT PROJECT

Coordinates		
North	East	Reading (mRAD/HR)
478001.63	1379548.88	0.04
477951.66	1379547.50	0.08
477901.66	1379546.13	0.05
477851.69	1379544.75	0.04
477801.69	1379543.38	0.03
477751.72	1379542.00	0.04
478000.25	1379598.75	0.07
477950.28	1379597.38	0.04
477900.28	1379596.00	0.03
477850.31	1379594.75	0.03
477800.34	1379593.38	0.04
477750.34	1379592.00	0.04
477998.88	1379648.75	0.06
477948.91	1379647.38	0.04
477898.94	1379646.00	0.05
477848.94	1379644.63	0.05
477546.31	1379736.38	0.03
477496.34	1379735.00	0.03
477694.91	1379790.50	0.03
477644.91	1379789.13	0.03
478057.06	1379350.25	0.04
478007.09	1379348.88	0.03
477957.13	1379347.50	0.04
477907.13	1379346.13	0.04
477857.16	1379344.75	0.04
477807.16	1379343.38	0.04
478055.72	1379400.25	0.03
478005.72	1379398.88	0.04
477955.75	1379397.50	0.03
477905.75	1379396.13	0.04
477855.78	1379394.75	0.03
477805.81	1379393.38	0.04
477755.81	1379392.00	0.03
478054.34	1379450.25	0.03
478004.38	1379448.88	0.04
477954.38	1379447.50	0.04
477904.41	1379446.13	0.03

1073

TABLE F-15E
(Continued)

Coordinates		
North	East	Reading (mRAD/HR)
477854.41	1379444.75	0.02
477804.44	1379443.38	0.04
477754.44	1379442.00	0.03
478052.97	1379500.25	0.05
478003.00	1379498.88	0.05
477953.00	1379497.50	0.07
477903.03	1379496.13	0.03
477853.06	1379494.75	0.02
477803.06	1379493.38	0.04
477753.09	1379492.00	0.04
478162.50	1379153.13	0.04
477798.97	1379643.25	0.04
477748.97	1379641.88	0.03
477947.53	1379697.38	0.04
477897.56	1379696.00	0.03
477847.56	1379694.63	0.04
477797.59	1379693.25	0.03
477747.63	1379691.88	0.03
477946.16	1379747.38	0.04
477896.19	1379746.00	0.02
477846.22	1379744.63	0.03
477796.22	1379743.25	0.04
477746.25	1379741.88	0.03
477944.81	1379797.38	0.04
477894.81	1379796.00	0.04
477844.84	1379794.63	0.03
477794.84	1379793.25	0.03
477744.88	1379791.88	0.04
477893.47	1379864.00	0.04
477843.47	1379844.63	0.05
477793.50	1379843.25	0.03
477701.75	1379540.63	0.03
477651.75	1379539.25	0.04
477601.78	1379537.88	0.03
477551.78	1379536.50	0.04
477501.81	1379535.13	0.02
477451.84	1379533.75	0.03
477401.84	1379532.38	0.05
477351.88	1379531.00	0.04
477301.88	1379529.63	0.04
477251.91	1379528.25	0.04

1074

5174

TABLE F-15E
(Continued)

Coordinates		
North	East	Reading (mRAD/HR)
477700.38	1379590.63	0.03
477650.38	1379589.25	0.03
477600.41	1379587.88	0.03
477550.44	1379586.50	0.03
477500.44	1379585.13	0.02
477450.47	1379583.75	0.04
477400.47	1379582.38	0.04
477350.50	1379581.00	0.04
477300.53	1379579.63	0.03
477250.53	1379578.25	0.03
477699.00	1379640.63	0.03
477649.03	1379639.25	0.03
477599.03	1379637.88	0.03
477549.06	1379636.50	0.04
477499.06	1379635.13	0.02
477449.09	1379633.75	0.03
477399.13	1379632.38	0.04
477349.13	1379631.00	0.03
477299.16	1379629.63	0.03
477697.63	1379690.50	0.03
477647.66	1379689.13	0.03
477597.66	1379687.88	0.02
477547.69	1379686.50	0.02
477497.72	1379685.13	0.02
477447.72	1379683.75	0.03
477397.75	1379682.38	0.04
477347.75	1379681.00	0.03
477696.25	1379740.50	0.04
477646.28	1379739.13	0.03
477596.31	1379737.75	0.03
478112.53	1379151.75	0.03
478062.56	1379150.38	0.05
478012.56	1379149.00	0.12
477962.59	1379147.63	0.04
478111.16	1379201.63	0.04
478061.19	1379200.38	0.04
478011.19	1379199.00	0.06
477961.22	1379197.63	0.04
478109.78	1379251.63	0.09
478059.81	1379250.25	0.04
478009.84	1379248.88	0.03

1075

TABLE F-15E
(Continued)

Coordinates		Reading (mRAD/HR)
North	East	
477959.84	1379247.50	0.04
478058.44	1379300.25	0.03
478008.47	1379298.88	0.08
477958.47	1379297.50	0.03
477210.13	1379227.00	0.03
477160.16	1379225.63	0.04
477110.16	1379224.25	0.02
477208.75	1379277.00	0.03
477158.78	1379275.63	0.03
477108.81	1379274.25	0.03
477207.41	1379327.00	0.03
477157.41	1379325.63	0.03
477107.44	1379324.25	0.03
477206.03	1379377.00	0.04
477156.03	1379375.63	0.03
477106.06	1379374.25	0.04
477204.66	1379427.00	0.03
477154.69	1379425.63	0.03
477104.69	1379424.25	0.03
477203.28	1379477.00	0.04
477153.31	1379475.63	0.03
477103.34	1379474.25	0.04
477201.94	1379526.88	0.03
477151.94	1379525.50	0.03
477101.97	1379524.25	0.03
477200.56	1379576.88	0.03
477150.56	1379575.50	0.02
477100.59	1379574.13	0.04
477199.19	1379626.88	0.05
477149.22	1379625.50	0.04
477099.22	1379624.13	0.05
477197.81	1379676.88	0.03
477147.84	1379675.50	0.03
477097.84	1379674.13	0.02
477704.47	1379440.63	0.04
477654.50	1379439.25	0.04
477604.50	1379437.88	0.04
477554.53	1379436.50	0.02
477504.53	1379435.13	0.03
477454.56	1379433.75	0.03
477404.59	1379432.38	0.04

1076

TABLE F-15E
(Continued)

Coordinates		
North	East	Reading (mRAD/HR)
477354.59	1379431.13	0.03
477304.63	1379429.75	0.03
477254.63	1379428.38	0.04
477703.09	1379490.63	0.03
477653.13	1379489.25	0.03
477603.16	1379487.88	0.03
477553.16	1379486.50	0.03
477503.19	1379485.13	0.04
477453.19	1379483.75	0.03
477403.22	1379482.38	0.04
477353.25	1379481.00	0.03
477303.25	1379479.63	0.03
477253.28	1379478.38	0.05
477919.44	1378896.38	0.04
477912.59	1379146.25	0.03
477862.63	1379144.88	0.04
477812.66	1379143.50	0.03
477762.66	1379142.13	0.03
477712.69	1379140.75	0.03
477911.25	1379196.25	0.04
477861.25	1379194.88	0.04
477811.28	1379193.50	0.03
477761.28	1379192.13	0.03
477711.31	1379190.75	0.04
477909.88	1379246.25	0.03
477859.88	1379244.88	0.03
477809.91	1379243.50	0.03
477759.94	1379242.13	0.03
477908.50	1379296.13	0.03
477858.53	1379294.75	0.02
477808.53	1379293.38	0.03
477758.56	1379292.13	0.03
477249.16	1379628.25	0.03
477709.94	1379240.75	0.03
477659.97	1379239.38	0.04
477609.97	1379238.00	0.03
477708.56	1379290.75	0.04
477608.63	1379288.00	0.03
477308.72	1379297.75	0.04
477258.75	1379278.38	0.03
477707.22	1379340.63	0.04

1077

TABLE F-15E
(Continued)

Coordinates		
North	East	Reading (mRAD/HR)
477657.22	1379339.38	0.04
477607.25	1379338.00	0.03
477557.25	1379336.63	0.04
477507.28	1379335.25	0.03
477407.31	1379332.50	0.03
477357.34	1379331.13	0.03
477307.34	1379329.75	0.03
477257.38	1379328.38	0.03
477705.84	1379390.63	0.04
477655.84	1379389.25	0.05
477605.88	1379387.88	0.04
477555.91	1379386.50	0.03
477505.91	1379385.25	0.03
477455.94	1379383.88	0.03
477405.94	1379382.50	0.03
477355.97	1379381.13	0.05
477306.00	1379379.75	0.03
477256.00	1379378.38	0.03

1078

FIGURE F-15A

CIS FIDLER MEASUREMENT CONTOURS

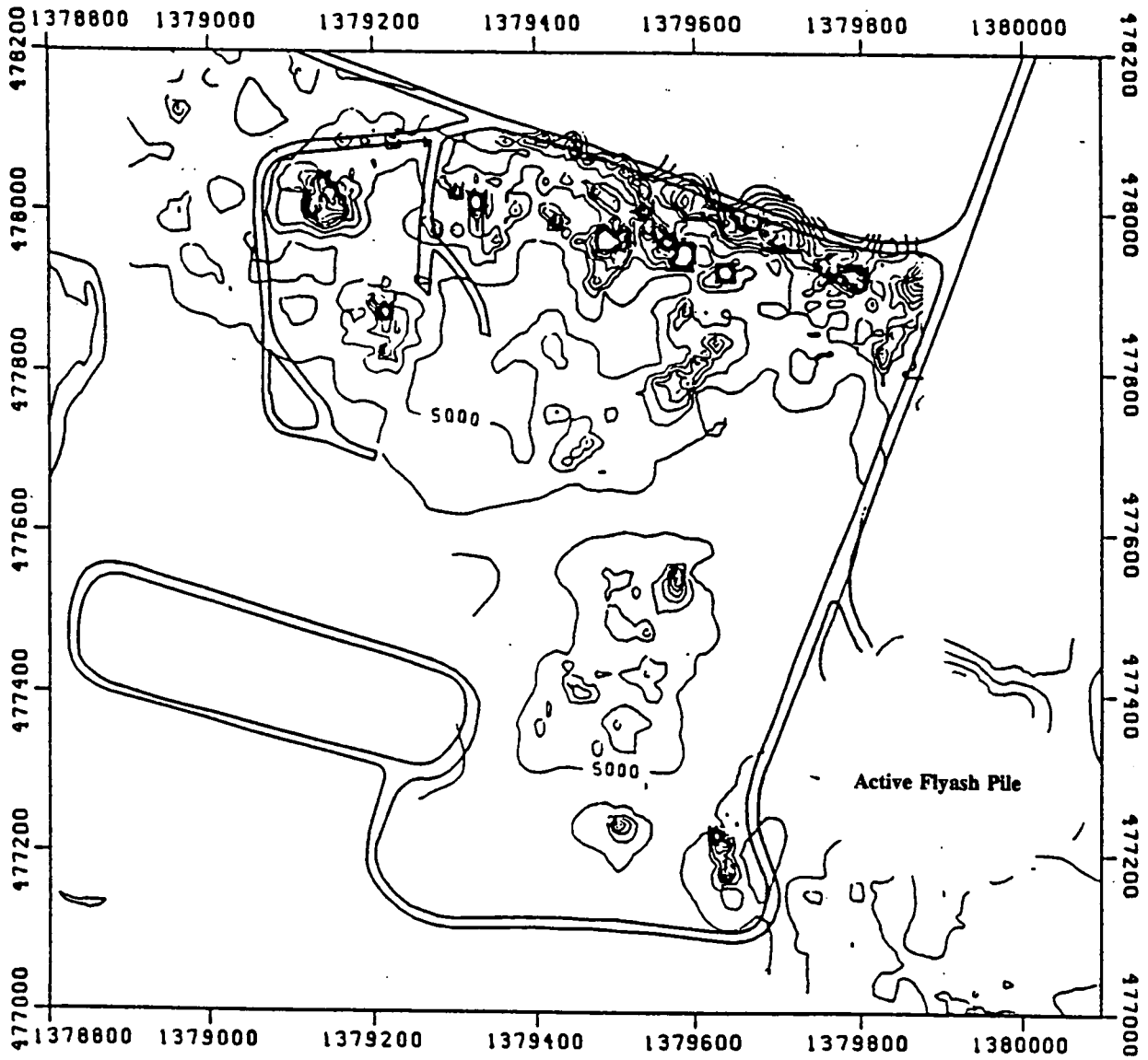

STATE PLANE COORDINATE SYSTEM

NAD 83 SOUTH ZONE

1 INCH = 225 FEET

1079

5174

FIGURE F-15B
CIS EXPOSURE RATE CONTOURS

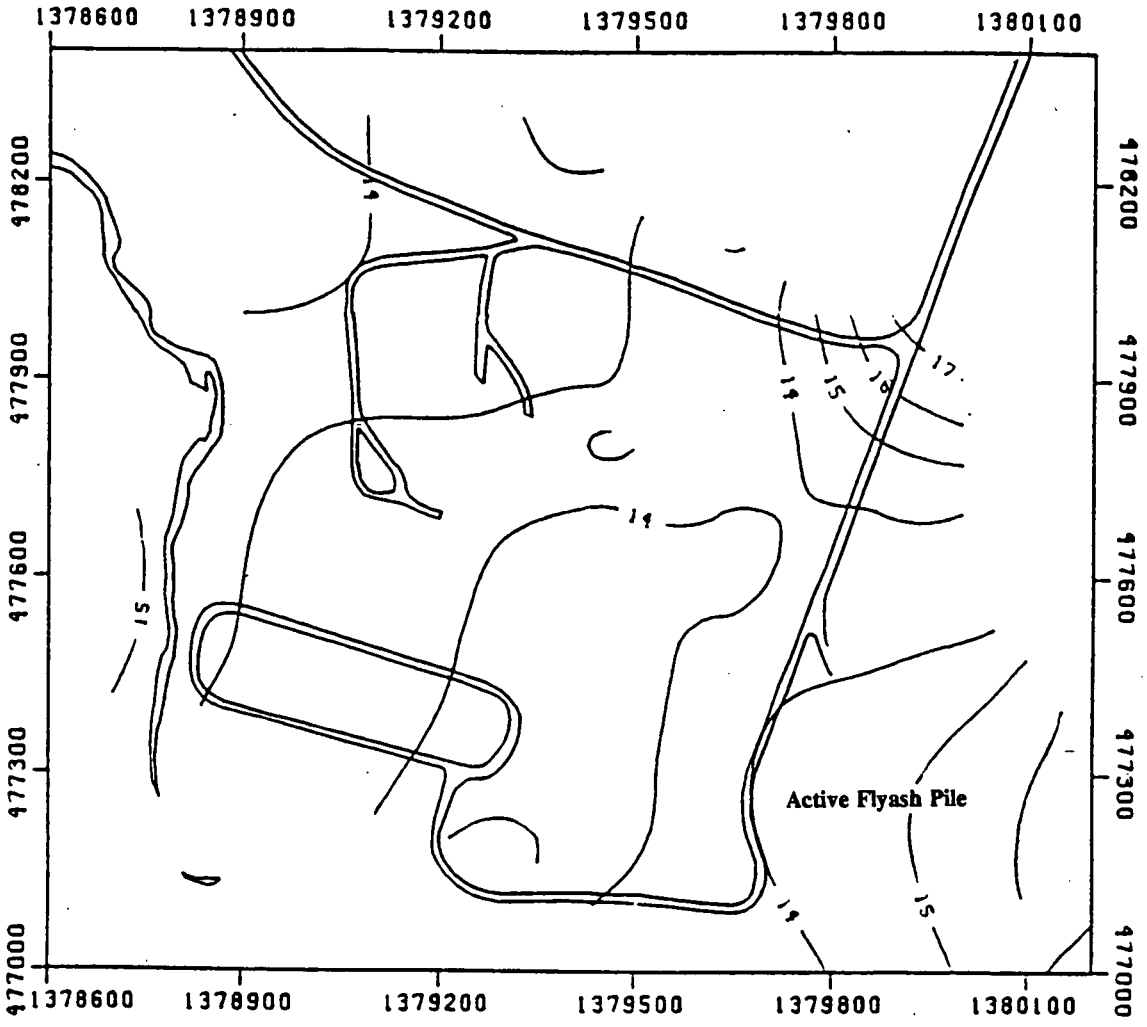

STATE PLANE

COORDINATE SYSTEM

0H10 SOUTH ZONE

1 INCH = 300 FEET

1080

FIGURE F-15C

CIS BETA GAMMA DOSE RATE CONTOURS

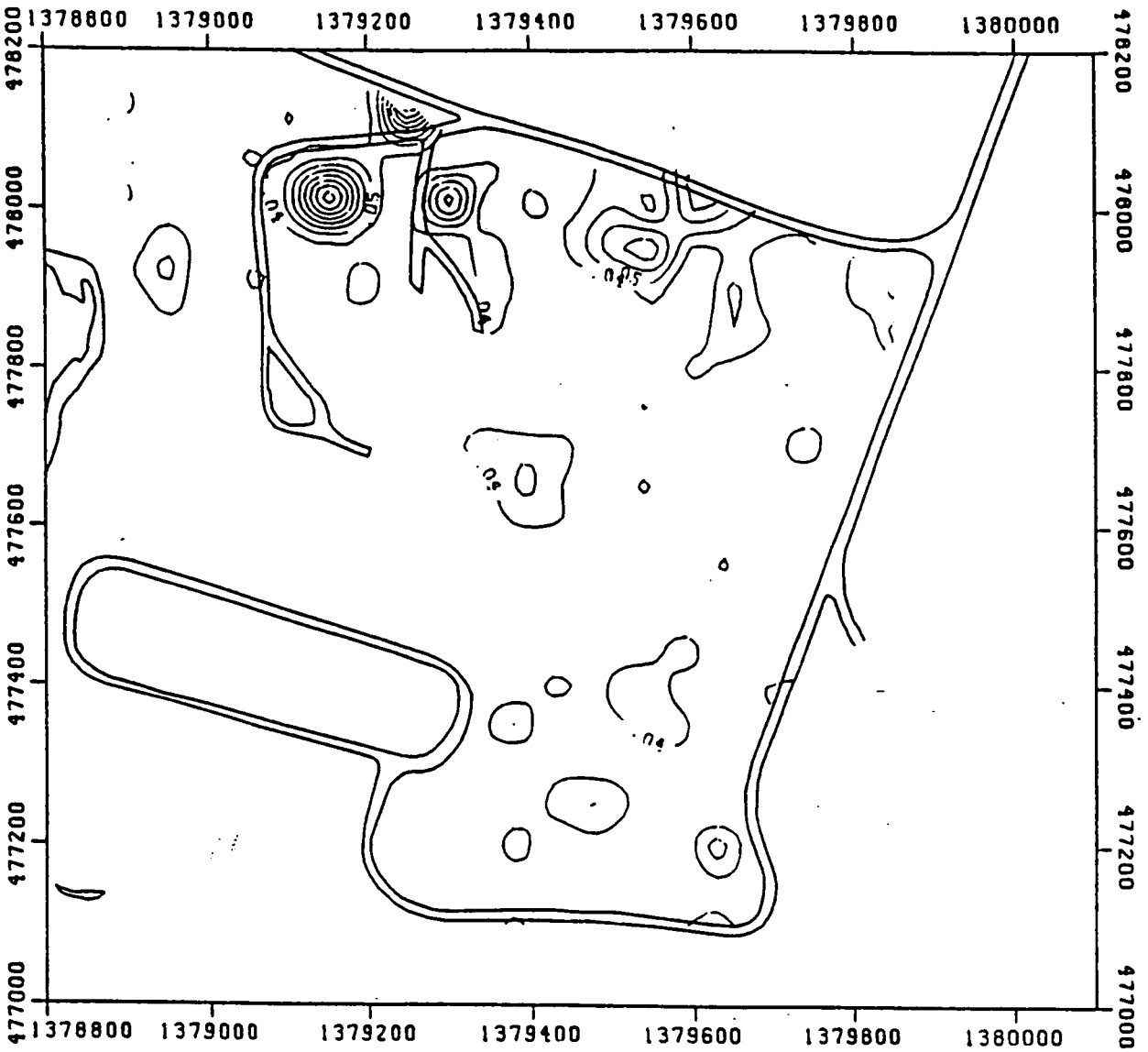

(mRad/hr) CONTOUR INTERVAL IS .01 mRad/hr

STATE PLANE COORDINATE SYSTEM

NAD83 SOUTH ZONE

1 INCH = 225 FEET

1081

TABLE F-16A

SOUTH FIELD
GEOTECHNICAL ANALYSIS
PHASE I FIELD INVESTIGATION
OPERABLE UNIT 2 REMEDIAL INVESTIGATION
FERNALD ENVIRONMENTAL MANAGEMENT PROJECT

SURFACE SAMPLES

Location	Wet Density (pcf)[a]	Dry Density (pcf)	Moisture Content (%)
#6	111.0	110.2	10.7
#7	103.7	95.6	8.5
#8	107.6	94.9	13.4

[a]pounds per cubic foot

TABLE F-16B

SOUTH FIELD
GEOTECHNICAL ANALYSIS
PHASE II FIELD INVESTIGATION
OPERABLE UNIT 2 REMEDIAL INVESTIGATION
FERNALD ENVIRONMENTAL MANAGEMENT PROJECT

Location	Sample No.	Date Sampled	Sample Interval (ft)[a]	Specific Gravity	Moisture Content (%)	Bulk Density Unit Weight (pcf)[b]	Dry Density (pcf)	Atterberg Limits			Permeability (cm/s)[c]
								Liquid Limit	Plastic Limit	Plasticity Index	
1964	112647	4/17/93	3.0-5.0	2.6858	15.5	-[d]	-	36	16	20	-
	112671	4/17/93	20.0-22.0	2.6949	3.7	-	-	16	11	5	-
1965	112735	4/20/93	0.0-2.0	2.7064	19.9	-	-	31	16	15	-
	112736	4/20/93	2.0-4.0	-	-	136.6	117.5	-	-	-	-
	112761	4/21/93	22.5-24.5	2.7189	19.3	-	-	30	14	16	-
	112762	4/21/93	24.5-26.5	-	-	133.7	124.9	-	-	-	-
1966	112858	4/21/93	2.5-4.5	2.7109	16.7	-	-	37	17	20	-
	112860	4/21/93	6.5-8.5	-	-	130.7	107.6	-	-	-	-
	112867	4/21/93	11.5-13.0	2.7557	21.8	-	-	35	15	20	-
	112868	4/21/93	13.0-15.0	-	-	130.4	109.6	-	-	-	-
1968	112833	4/20/93	1.0-3.0	-	-	117.8	102.5	-	-	-	-
	112834	4/20/93	3.0-4.5	-	-	-	-	28	18	10	-
1969	112557	4/15/93	2.0-4.0	2.7553	23.2	-	-	37	18	19	-
	112562	4/15/93	7.0-9.0	2.7571	30.6	-	-	31	17	14	-
	112564	4/15/93	10.5-12.0	2.6951	16.6	-	-	NP[e]	NP	NP	-
	112565	4/15/93	12.0-13.5	-	-	143.6	128.1	-	-	-	-

See footnotes at end of table

TABLE F-16B
(Continued)

Location	Sample No.	Date Sampled	Sample Interval (ft)[a]	Specific Gravity	Moisture Content (%)	Bulk Density Unit Weight (pcf)[b]	Dry Density (pcf)	Atterberg Limits			Permeability (cm/s)[c]
								Liquid Limit	Plastic Limit	Plasticity Index	
1970	112688	4/18/93	0.0-2.0	-	-	135.7	115.3	-	-	-	-
	112691	4/18/93	5.0-7.0	2.7278	16.9	-	-	34	19	15	-
	112892	4/18/93	7.0-9.0	-	-	123.2	101.6	-	-	-	$3.7E^{-8}$
1974	112518	4/13/93	0.0-2.0	-	-	126.1	106.8	-	-	-	-
	112519	4/13/93	2.0-4.0	2.7018	16.3	-	-	29	17	12	-
1975	112544	4/13/93	2.0-4.0	2.7073	20.8	-	-	34	16	18	-
	112546	4/15/93	5.0-7.0	-	-	122.2	96.9	-	-	-	-
1977	110568	4/6/93	3.0-5.0	-	-	139.0	122.9	-	-	-	-
	110569	4/6/93	5.0-8.0	2.7500	22.9	-	-	38	15	23	-
	110575	4/7/93	11.5-13.5	2.7534	25.0	-	-	20	16	4	-
	110578	4/7/93	14.5-16.5	-	-	135.1	114.9	-	-	-	$1.4E^{-7}$
2945	110240	3/19/93	4.5-6.0	-	-	-	-	26	17	9	-
	110244	3/24/93	5.0-7.0	2.6935	17.5	-	-	-	-	-	-
	110253	3/29/93	25.0-27.0	2.7238	12.7	-	-	NP	NP	NP	-

[a]The sample interval is depth, in feet, below the ground surface

[b]Pounds per cubic foot

[c]Centimeters per second

[d]The sample not analyzed for this parameter.

[e]NP - Nonplastic

1084
5174

TABLE F-16C

SOUTH FIELD
SIEVE ANALYSIS - ASTM D 422
PHASE II FIELD INVESTIGATION
OPERABLE UNIT 2 REMEDIAL INVESTIGATION
FERNALD ENVIRONMENTAL MANAGEMENT PROJECT

Location	Sample No.	Date Sampled	Sample Interval (ft)[a]	Classification[b]	Sieve Analysis (% Passing Sieve No.)											
					3"	1.5"	0.75"	0.375"	#4	#10	#20	#40	#60	#100	#140	#200
SF-SD-02	112992	4/22/93	0.0-1.5	NA[c]	100	100	100	99.5	95.9	92.6	87.6	81.1	75.7	71.1	68.7	66.8
1964	112647	4/17/93	3.0-5.0	CL	100	100	98.0	97.0	95.3	92.3	89.3	86.0	82.3	78.9	77.0	75.5
	112671	4/17/93	20.0-22.0	CL-ML	100	100	100	97.3	91.7	76.0	63.4	47.6	30.2	21.5	19.1	17.8
1965	112735	4/20/93	0.0-2.0	CL	100	100	100	97.6	93.2	89.8	86.0	82.6	79.8	76.6	73.9	71.3
	112761	4/21/93	22.5-24.5	CL	100	100	100	97.1	95.8	93.5	89.9	84.5	77.9	71.9	68.4	66.0
1966	112858	4/21/93	2.5-4.5	CL	100	100	94.5	93.2	90.9	88.2	84.2	80.7	77.5	74.0	72.0	70.4
	112867	4/21/93	11.5-13.0	CL	100	100	100	100	99.1	97.2	94.2	91.8	89.5	87.0	85.3	83.9
1969	112557	4/15/93	2.0-4.0	CL	100	100	100	100	100	99.7	99.0	98.5	98.0	97.4	97.1	96.9
	112562	4/15/93	7.0-9.0	CL	100	100	100	100	99.9	99.5	99.4	99.1	98.9	98.6	98.5	98.3
	112564	4/15/93	10.5-12.0	NP	100	100	98.0	96.9	95.8	93.3	90.9	88.0	84.0	72.8	64.4	58.5
1970	112691	4/18/93	5.0-7.0	CL	100	100	89.5	82.9	79.2	75.9	72.1	68.0	64.7	61.3	58.6	56.7
1974	112519	4/13/93	2.0-4.0	CL	100	100	95.2	86.3	80.3	75.3	69.8	65.5	62.5	59.8	58.1	56.8
1975	112544	4/13/93	2.0-4.0	CL	100	100	98.6	92.4	89.3	86.0	82.7	78.1	74.8	72.0	70.4	69.1
1977	110569	4/6/93	5.0-8.0	CL	100	100	98.4	98.2	96.2	93.1	89.0	85.1	80.6	74.5	70.8	68.2
	110575	4/7/93	11.5-13.5	CL-ML	100	100	100	99.7	99.1	97.1	93.6	89.9	86.8	83.6	80.7	77.5
2945	110239	3/19/93	3.0-4.5	CL	100	100	100	97.2	88.3	83.1	77.6	73.5	71.1	69.2	67.9	66.9

See footnotes at end of table

FE[illegible]2RI\JLG\TABF-16C\February 4, 1994 3:10pm

TABLE F-16C
(Continued)

Location	Sample No.	Date Sampled	Sample Interval (ft)[a]	Classification[b]	Sieve Analysis (% Passing Sieve No.)											
					3"	1.5"	0.75"	0.375"	#4	#10	#20	#40	#60	#100	#140	#200
2945	110241	3/19/93	6.0-7.5	NA	100	100	100	94.0	82.7	73.9	65.7	59.1	54.8	51.4	49.4	47.8
	110253	3/29/93	25.0-27.0	NP	100	100	100	98.9	96.1	89.7	76.8	60.2	36.4	20.6	16.9	15.1

[a]The sample interval is depth, in feet, below the ground surface

[b]Unified Soil Classification System (USCS).

ML = inorganic silts and very fine sands, rock flour, silty or clayey fine sands, or clayey silts with slight plasticity
CL = inorganic clays of low to medium plasticity, gravelly clays, sandy clays, silty clays, lean clays.
NP = nonplastic

[c]Not applicable

TABLE F-16D

SOUTH FIELD
HYDROMETER ANALYSIS - ASTM D 422
PHASE II FIELD INVESTIGATION
OPERABLE UNIT 2 REMEDIAL INVESTIGATION
FERNALD ENVIRONMENTAL MANAGEMENT PROJECT

LOCATION: SF-SD-02 SAMPLE NO.: 112992 DEPTH: 0.0-0.5 ft.

Particle Diameter (mm)	0.05655	0.04066	0.03029	0.02231	0.01314	0.00934	0.00662	0.00477	0.00331	0.00142
Percent Finer	66.4	63.2	53.4	17.8	8.9	7.3	6.5	4.9	4.0	4.0

LOCATION: 1964 SAMPLE NO.: 112647 DEPTH: 3.0-5.0 ft.

Particle Diameter (mm)	0.05226	0.03842	0.02798	0.01837	0.01134	0.00834	0.00611	0.00450	0.00316	0.00135
Percent Finer	75.0	70.1	66.5	60.9	51.0	43.9	37.5	29.0	20.5	6.4

LOCATION: 1964 SAMPLE NO.: 112671 DEPTH: 20.0-22.0 ft.

Particle Diameter (mm)	0.05168	0.03868	0.02471	0.01426	0.01009	0.00713	0.00506	0.00342	0.00138
Percent Finer	15.1	4.1	2.3	2.3	2.3	2.3	1.2	1.2	0.0

LOCATION: 1965 SAMPLE NO.: 112735 DEPTH: 0.0-2.0 ft.

Particle Diameter (mm)	0.05540	0.04017	0.02894	0.01924	0.01210	0.00883	0.00627	0.00447	0.00316	0.00137
Percent Finer	68.4	63.5	60.2	50.3	30.5	22.2	18.1	15.7	13.2	9.9

TABLE F-16D
(Continued)

LOCATION: 1965 SAMPLE NO.: 112761 DEPTH: 22.5-24.5 ft.

Particle Diameter (mm)	0.05983	0.04324	0.03086	0.07988	0.01188	0.00862	0.00618	0.00443	0.00313	0.00136
Percent Finer	64.2	59.3	56.3	51.4	41.5	30.6	25.7	21.7	18.8	13.8

LOCATION: 1966 SAMPLE NO.: 112858 DEPTH: 2.5-4.5 ft.

Particle Diameter (mm)	0.03939	0.02840	0.01840	0.01132	0.00850	0.00628	0.00458	0.00322	0.00139
Percent Finer	65.2	61.2	57.2	44.5	27.8	16.7	11.1	7.9	4.0

LOCATION: 1966 SAMPLE NO.: 112867 DEPTH: 11.5-13.0 ft.

Particle Diameter (mm)	0.00878	0.00683	0.00528	0.00419	0.00318	0.00138
Percent Finer	50.7	42.0	32.4	18.8	3.9	1.4

LOCATION: 1969 SAMPLE NO.: 112557 DEPTH: 2.0-4.0 ft.

Particle Diameter (mm)	0.01628	0.01060	0.00833	0.00645	0.00473	0.00323	0.00133
Percent Finer	77.7	59.8	41.1	20.9	12.0	9.0	1.5

LOCATION: 1969 SAMPLE NO.: 112562 DEPTH: 7.0-9.0 ft.

Particle Diameter (mm)	0.00966	0.00770	0.00602	0.00448	0.00312	0.00132
Percent Finer	72.7	54.9	35.6	25.2	17.8	5.2

1088

5174

5174

TABLE F-16D
(Continued)

LOCATION: 1969 SAMPLE NO.: 112564 DEPTH: 10.5-12.0 ft.

Particle Diameter (mm)	0.06078	0.04570	0.03695	0.02430	0.01412	0.01005	0.00711	0.00496	0.00341	0.00137
Percent Finer	54.1	44.1	16.4	701	5.0	3.6	3.6	3.6	2.8	1.4

LOCATION: 1970 SAMPLE NO.: 112691 DEPTH: 5.0-7.0 ft.

Particle Diameter (mm)	0.05619	0.04070	0.02945	0.01944	0.01204	0.00887	0.00642	0.00452	0.00319	0.00132
Percent Finer	55.2	52.1	49.0	42.9	32.5	25.1	20.8	16.5	13.5	6.7

LOCATION: 11187 (1974) SAMPLE NO.: 112519 DEPTH: 2.0-4.0 ft.

Particle Diameter (mm)	0.05549	0.04046	0.02912	0.01934	0.01222	0.00901	0.00652	0.00453	0.00320	0.00132
Percent Finer	55.2	51.6	49.8	43.2	28.8	21.6	17.4	15.6	12.0	7.2

LOCATION: 1975 SAMPLE NO.: 112544 DEPTH: 2.0-4.0 ft.

Particle Diameter (mm)	0.05334	0.03849	0.02827	0.01862	0.01162	0.00853	0.00624	0.00447	0.00312	0.00130
Percent Finer	69.0	66.3	61.4	55.2	42.8	35.9	29.0	24.2	20.0	11.7

LOCATION: 1977 SAMPLE NO.: 110569 DEPTH: 5.0-8.0 ft.

Particle Diameter (mm)	0.05773	0.04128	0.02967	0.01960	0.01178	0.00859	0.00620	0.00435	0.00306	0.00126
Percent Finer	64.6	62.2	59.1	51.2	43.3	36.2	31.5	27.6	23.6	16.5

1089

TABLE F-16D
(Continued)

LOCATION: 1977 SAMPLE NO.: 110575 DEPTH: 11.5-13.5 ft.

Particle Diameter (mm)	0.05185	0.03818	0.02895	0.02082	0.01286	0.00926	0.00660	0.00458	0.00319	0.00131
Percent Finer	73.9	68.8	58.7	35.5	21.0	16.7	14.5	13.0	10.9	6.5

LOCATION: 2945 SAMPLE NO.: 110239 DEPTH: 3.0-4.5 ft.

Particle Diameter (mm)	0.05494	0.03956	0.02831	0.01852	0.01236	0.00920	0.00665	0.00475	0.00329	0.00137
Percent Finer	64.4	61.5	60.1	54.4	30.0	18.6	13.6	11.4	8.6	2.9

LOCATION: 2945 SAMPLE NO.: 110241 DEPTH: 6.0-7.5 ft.

Particle Diameter (mm)	0.05595	0.04072	0.02959	0.01611	0.01241	0.00906	0.00651	0.00467	0.00323	0.00135
Percent Finer	47.1	43.8	40.5	29.0	22.4	17.5	14.2	12.0	9.9	5.5

LOCATION: 2945 SAMPLE NO.: 110253 DEPTH: 25.0-27.0 ft.

Particle Diameter (mm)	0.06827	0.04883	0.03524	0.02249	0.01321	0.00942	0.00672	0.00477	0.00330	0.00140
Percent Finer	13.7	11.8	8.7	7.3	4.6	3.2	1.8	1.4	1.4	0.9

1090

5174

TABLE F-16E

SOUTH FIELD
ONE DIMENSIONAL CONSOLIDATION - ASTM D 2435
PHASE II FIELD INVESTIGATION
OPERABLE UNIT 2 REMEDIAL INVESTIGATION
FERNALD ENVIRONMENTAL MANAGEMENT PROJECT

LOCATION: 1965 SAMPLE NO.: 112762 DEPTH: 24.5-26.5 ft.

Applied Pressure (tsf)[a]	0.06	0.13	0.25	0.50	1.00	2.00	4.00	8.00	16.00	4.00	1.00	0.25
Void Ratio	0.3818	0.3769	0.3712	0.3520	0.3442	0.3193	0.2917	0.2629	0.2297	0.2366	0.2431	0.2495

LOCATION: 1970 SAMPLE NO.: 112689 DEPTH: 2.0-4.0 ft.

Applied Pressure (tsf)	0.13	0.25	0.50	1.00	2.00	4.00	8.00	16.00	8.00	4.00	2.00	1.00	0.50	0.25
Void Ratio	0.5510	0.5440	0.5313	0.5135	0.4736	0.4296	0.3810	0.3317	0.3371	0.3458	0.3574	0.3706	0.3830	0.3948

LOCATION: 1977 SAMPLE NO.: 110568 DEPTH: 3.0-5.0 ft.

Applied Pressure (tsf)	0.06	0.13	0.25	0.50	1.00	2.00	4.00	8.00	16.00	8.00	4.00	2.00	1.00	0.50	0.25
Void Ratio	0.3359	0.3341	0.3260	0.3140	0.3003	0.2817	0.2678	0.2497	0.2015	0.2034	0.2066	0.2104	0.2147	0.2192	0.2236

[a]Tons per square foot

5174

TABLE F-17A

SOUTH FIELD
CIS GEOPHYSICAL ANALYSIS EM 31 MEASUREMENTS
OPERABLE UNIT 2 REMEDIAL INVESTIGATION
FERNALD ENVIRONMENTAL MANAGEMENT PROJECT

		MMHOS/M (Unit)	
North Coordinate	East Coordinate	Horizontal Result	Vertical Result
477912.61	1379146.23	21.50	29.00
477962.59	1379147.59	23.00	19.00
477987.58	1379148.28	25.00	30.00
478012.57	1379148.97	23.00	30.00
478062.56	1379150.33	30.00	39.00
478082.55	1379150.88	26.50	29.00
478112.54	1379151.70	22.50	29.00
478111.17	1379201.69	18.00	24.00
478085.18	1379200.97	21.00	30.00
478061.19	1379200.31	24.00	31.00
478046.19	1379199.91	19.50	26.00
478011.21	1379198.95	21.50	28.00
477961.23	1379197.58	21.00	24.00
477911.24	1379196.22	20.00	19.00
477859.89	1379244.81	23.50	36.00
477909.87	1379246.19	22.00	12.00
477959.86	1379247.55	23.50	28.00
478009.84	1379248.92	22.50	28.00
478059.82	1379250.28	26.00	32.00
478079.81	1379250.83	20.00	25.00
478103.80	1379251.48	23.50	32.00
478109.80	1379251.66	22.00	27.00
478108.43	1379301.64	19.00	30.00
478078.44	1379300.81	23.00	37.00
478058.45	1379300.27	21.50	30.00
478008.47	1379298.91	23.50	32.00
477958.49	1379297.53	23.50	30.00
477908.50	1379296.17	13.00	22.00
477858.52	1379294.80	18.00	30.00
477807.18	1379343.42	17.50	24.50
477857.16	1379344.78	18.50	27.50
477907.14	1379346.16	23.00	34.00
477957.12	1379347.52	9.50	-100.00
478007.10	1379348.89	21.50	28.00
478057.08	1379350.25	18.50	27.00

1092

TABLE F-17A
(Continued)

North Coordinate	East Coordinate	MMHOS/M (Unit) Horizontal Result	Vertical Result
478055.71	1379400.23	21.50	29.00
478005.73	1379398.88	24.00	29.50
477955.75	1379397.50	19.00	45.00
477905.77	1379396.14	14.00	23.00
477855.79	1379394.77	26.00	-100.00
477805.81	1379393.41	28.00	-100.00
477795.81	1379393.13	20.00	54.00
477775.82	1379392.58	30.00	10.00
477755.83	1379392.03	24.00	10.50
477654.50	1379439.28	26.50	11.00
477694.48	1379440.38	61.00	30.00
477699.48	1379440.52	78.00	-100.00
477704.48	1379440.66	71.00	11.00
477714.48	1379440.92	40.00	41.00
477754.46	1379442.02	23.00	39.00
477764.46	1379442.30	24.00	22.00
477804.44	1379443.39	22.00	31.00
477854.42	1379444.75	17.00	26.00
477904.40	1379446.13	20.00	28.00
477954.39	1379447.48	25.00	36.00
478004.37	1379448.86	20.00	28.50
478054.35	1379450.22	22.00	31.00
478003.00	1379498.83	22.00	30.00
477953.02	1379497.45	17.00	22.00
477903.03	1379496.09	-100.00	62.00
477853.05	1379494.72	12.00	130.00
477803.07	1379493.36	27.50	33.00
477753.09	1379491.98	20.50	29.50
477703.11	1379490.63	26.50	31.00
477653.13	1379489.25	26.00	25.00
477628.14	1379488.56	30.00	27.00
477603.14	1379487.88	27.00	33.00
477578.16	1379487.20	24.00	23.00
477553.16	1379486.52	24.00	29.50
477503.18	1379485.14	26.00	29.50
477453.20	1379483.78	24.00	34.00
477413.21	1379482.69	26.50	33.00
477403.22	1379482.41	25.00	33.00

1093

5174

TABLE F-17A
(Continued)

North Coordinate	East Coordinate	MMHOS/M (Unit) Horizontal Result	Vertical Result
477353.24	1379481.05	22.50	30.00
477304.63	1379429.70	20.00	29.00
477354.61	1379431.08	22.00	23.50
477389.60	1379432.03	27.00	6.50
477404.59	1379432.44	19.50	22.50
477401.85	1379532.39	21.00	26.50
477436.84	1379533.36	23.00	29.50
477451.84	1379533.77	18.00	27.00
477501.82	1379535.13	25.00	20.50
477551.80	1379536.50	19.00	25.00
477601.78	1379537.86	26.50	30.00
477651.76	1379539.23	23.00	32.00
477681.75	1379540.06	28.50	27.50
477701.74	1379540.61	27.00	34.00
477751.72	1379541.97	25.00	33.00
477801.70	1379543.34	18.00	25.00
477851.68	1379544.70	20.00	28.50
477866.68	1379545.11	16.00	-100.00
477886.67	1379545.66	25.00	30.00
477901.66	1379546.08	22.50	32.00
477951.65	1379547.44	17.00	29.00
478001.63	1379548.81	21.00	27.00
478000.26	1379598.80	24.00	30.00
477950.28	1379597.42	25.50	31.00
477940.29	1379597.16	22.00	-100.00
477900.30	1379596.06	19.00	30.00
477880.31	1379595.52	23.00	-100.00
477851.32	1379594.72	27.00	-100.00
477850.32	1379594.69	22.00	24.00
477825.33	1379594.00	20.00	30.00
477820.33	1379593.88	24.00	-100.00
477815.33	1379593.73	31.00	15.00
477812.33	1379593.66	31.00	-100.00
477810.33	1379593.59	33.00	-100.00
477800.34	1379593.33	27.00	38.00
477750.36	1379591.95	20.50	30.00
477700.38	1379590.59	23.00	31.00
477650.39	1379589.22	23.00	30.50

1094

TABLE F-17A
(Continued)

North Coordinate	East Coordinate	MMHOS/M (Unit)	
		Horizontal Result	Vertical Result
477600.41	1379587.84	22.50	30.00
477550.43	1379586.48	18.00	27.00
477500.45	1379585.11	19.50	29.00
477450.47	1379583.75	20.00	29.00
477400.48	1379582.38	16.50	24.50
477350.50	1379581.02	20.00	28.50
477350.50	1379581.02	18.00	27.00
477349.14	1379631.00	18.00	22.00
477399.12	1379632.36	23.00	28.00
477449.10	1379633.73	27.00	30.00
477499.08	1379635.09	21.00	30.50
477549.06	1379636.47	26.00	41.00
477569.06	1379637.02	25.00	40.00
477574.06	1379637.16	23.00	20.50
477599.04	1379637.83	22.00	31.00
477399.12	1379632.36	23.00	28.00
477449.10	1379633.73	27.00	30.00
477499.08	1379635.09	21.00	30.50
477549.06	1379636.47	26.00	41.00
477569.06	1379637.02	25.00	40.00
477574.06	1379637.16	23.00	20.50
477599.04	1379637.83	22.00	31.00
477649.02	1379639.20	23.00	31.50
477699.01	1379640.58	20.50	30.00
477748.99	1379641.94	20.50	30.00
477798.97	1379643.31	20.50	30.00
477848.95	1379644.67	22.50	30.50
477898.93	1379646.05	21.00	30.00
477918.93	1379646.59	16.00	19.50
477938.92	1379647.14	20.00	38.00
477948.91	1379647.41	13.50	19.50
477958.91	1379647.69	24.00	38.00
477968.91	1379647.95	19.50	29.00
477998.89	1379648.78	24.50	30.50
477997.53	1379698.77	23.00	31.00
477947.55	1379697.39	25.00	31.00
477897.56	1379696.03	21.00	28.50
477847.58	1379694.66	22.50	31.00

TABLE F-17A
(Continued)

North Coordinate	East Coordinate	MMHOS/M (Unit) Horizontal Result	Vertical Result
477797.60	1379693.30	24.00	31.50
477747.62	1379691.92	21.00	30.00
477697.64	1379690.56	22.50	30.50
477647.66	1379689.19	23.50	31.00
477597.68	1379687.81	24.00	31.00
477547.69	1379686.45	20.00	30.00
477497.71	1379685.08	19.50	28.00
477447.73	1379683.72	19.00	25.50
477397.75	1379682.34	18.00	18.00
477396.38	1379732.31	17.50	30.00
477546.32	1379736.42	23.00	30.00
477596.31	1379737.78	22.00	30.50
477646.29	1379739.16	24.50	34.00
477696.27	1379740.53	23.50	33.00
477746.25	1379741.89	23.00	33.00
477796.23	1379743.27	21.00	31.00
477846.21	1379744.63	23.00	29.50
477896.19	1379746.00	22.00	30.50
477946.18	1379747.36	22.00	28.50
477944.81	1379797.34	24.50	31.00
477894.82	1379795.98	22.00	34.00
477844.84	1379794.61	20.00	30.00
477794.86	1379793.25	24.00	35.00
477744.88	1379791.88	22.50	36.00
477694.90	1379790.52	25.00	36.00
477644.92	1379789.14	23.00	33.00
477793.50	1379843.23	22.50	34.00
477843.48	1379844.59	22.00	30.00
477893.46	1379845.97	24.00	34.00
477943.44	1379847.33	27.00	33.00
477371.02	1378831.30	3.50	7.00
477421.00	1378832.66	8.50	18.00
477429.00	1378832.88	13.00	17.00
477441.00	1378833.20	30.00	-100.00
477451.00	1378833.48	36.00	-100.00
477470.99	1378834.03	29.50	29.00
477485.98	1378834.44	17.50	29.50
477505.97	1378834.98	37.50	-100.00

1096

TABLE F-17A
(Continued)

North Coordinate	East Coordinate	MMHOS/M (Unit) Horizontal Result	Vertical Result
477519.97	1378835.38	30.00	-100.00
477520.97	1378835.39	26.00	-100.00
477550.96	1378836.22	4.30	8.00
477619.56	1378888.11	5.00	7.80
477569.58	1378886.75	8.20	11.00
477562.59	1378886.56	10.00	18.00
477555.59	1378886.36	10.00	-100.00
477549.59	1378886.20	10.00	-100.00
477544.59	1378886.06	10.00	21.00
477519.60	1378885.38	7.00	9.70
477469.62	1378884.02	6.80	10.00
477439.63	1378883.19	7.80	11.00
477419.64	1378882.64	10.00	19.00
477409.64	1378882.38	11.00	23.00
477404.64	1378882.23	12.50	-100.00
477398.64	1378882.06	12.00	-100.00
477393.65	1378881.94	12.00	22.00
477384.65	1378881.69	7.30	11.00
477368.29	1378931.27	7.50	11.00
477376.29	1378931.48	9.90	18.00
477383.29	1378931.67	10.00	-100.00
477381.29	1378931.61	11.00	-100.00
477418.27	1378932.63	10.50	13.00
477468.25	1378934.00	6.40	9.00
477512.23	1378935.20	6.30	8.30
477518.23	1378935.36	7.70	10.00
477528.23	1378935.64	10.50	20.00
477533.23	1378935.78	11.00	-100.00
477538.23	1378935.91	10.50	-100.00
477543.22	1378936.05	10.00	22.00
477603.20	1378937.69	5.60	7.40
477618.19	1378938.09	7.40	9.60
477616.82	1378988.06	4.20	6.20
477566.84	1378986.70	6.80	9.40
477536.86	1378985.88	11.00	20.50
477526.86	1378985.61	11.50	-100.00
477519.86	1378985.42	8.50	-100.00
477516.86	1378985.33	8.70	1097 12.00

TABLE F-17A
(Continued)

North Coordinate	East Coordinate	MMHOS/M (Unit) Horizontal Result	Vertical Result
477514.86	1378985.28	7.70	18.00
477473.88	1378984.16	6.00	7.00
477466.88	1378983.97	6.60	8.60
477416.90	1378982.59	7.50	11.00
477396.91	1378982.05	10.50	17.00
477386.91	1378981.78	12.50	13.00
477381.91	1378981.64	13.50	-100.00
477371.92	1378981.36	12.00	-100.00
477366.92	1378981.23	11.00	21.00
477345.56	1379030.67	9.40	12.50
477355.56	1379030.94	12.50	18.00
477361.56	1379031.11	12.00	-100.00
477365.55	1379031.22	12.00	-100.00
477368.55	1379031.30	12.00	-100.00
477380.55	1379031.63	9.80	18.00
477415.53	1379032.58	5.90	8.30
477465.52	1379033.95	4.50	6.50
477500.50	1379034.91	9.30	18.00
477505.50	1379035.05	11.00	-100.00
477514.50	1379035.30	12.00	-100.00
477515.50	1379035.31	11.50	5.80
477520.49	1379035.45	11.00	20.50
477565.48	1379036.69	7.70	9.00
477615.46	1379038.05	6.80	9.00
477640.45	1379038.73	10.50	12.50
477614.09	1379088.03	11.00	11.00
477564.11	1379086.67	9.70	11.00
477514.13	1379085.30	7.80	12.50
477464.15	1379083.94	4.10	5.80
477414.16	1379082.56	3.60	4.80
477364.18	1379081.20	8.60	14.00
477312.84	1379129.81	6.60	11.00
477327.83	1379130.22	9.20	18.00
477332.83	1379130.36	10.00	-100.00
477342.82	1379130.64	10.50	-100.00
477347.82	1379130.77	8.70	14.50
477362.82	1379131.19	5.30	8.60
477412.80	1379132.55	4.00	5.40

1098

TABLE F-17A
(Continued)

North Coordinate	East Coordinate	MMHOS/M (Unit) Horizontal Result	Vertical Result
477462.78	1379133.92	6.30	9.70
477472.78	1379134.19	9.30	17.50
477477.77	1379134.33	9.90	-100.00
477482.77	1379134.47	12.00	-100.00
477487.77	1379134.61	10.50	18.50
477512.76	1379135.28	8.60	11.50
477562.74	1379136.66	9.30	13.00
477612.72	1379138.02	23.00	28.00
477627.72	1379138.44	19.50	3.50
477630.72	1379138.52	19.50	11.00
477614.18	1379158.06	1.0E30	1.0E30
477614.04	1379163.06	1.0E30	1.0E30
477611.36	1379188.00	24.00	24.00
477604.36	1379187.81	30.00	31.00
477591.36	1379187.45	30.00	15.00
477586.37	1379187.33	27.00	24.00
477571.37	1379186.91	15.00	15.50
477561.38	1379186.64	11.00	17.00
477511.39	1379185.27	9.60	13.00
477461.41	1379183.91	10.00	-100.00
477411.43	1379182.53	5.20	8.00
477361.45	1379181.17	9.50	12.00
477311.47	1379179.80	14.50	33.00
477260.12	1379228.41	7.50	8.40
477300.10	1379229.50	11.50	18.50
477306.10	1379229.66	12.50	-100.00
477310.10	1379229.77	10.50	-100.00
477314.10	1379229.88	10.00	-100.00
477320.09	1379230.05	10.00	27.50
477360.08	1379231.14	8.30	10.50
477410.06	1379232.50	6.00	8.30
477478.04	1379234.36	9.50	19.00
477472.04	1379234.20	10.00	-100.00
477466.04	1379234.03	12.00	-100.00
477460.04	1379233.88	11.50	19.50
477510.02	1379235.23	9.70	12.50
477560.00	1379236.61	10.00	13.00
477602.99	1379237.78	15.00	13.00

1099

TABLE F-17A
(Continued)

North Coordinate	East Coordinate	MMHOS/M (Unit)	
		Horizontal Result	Vertical Result
477609.98	1379237.97	17.00	24.50
477608.62	1379287.95	13.50	21.00
477558.64	1379286.59	10.00	13.00
477508.66	1379285.22	11.00	14.00
477458.68	1379283.86	9.20	13.00
477408.69	1379282.48	8.00	11.00
477358.71	1379281.13	7.50	10.00
477308.73	1379279.75	14.00	-100.00
477303.73	1379279.61	16.00	28.00
477293.73	1379279.34	12.00	16.00
477358.71	1379281.13	10.50	20.50
477382.34	1379331.78	10.50	25.00
477407.32	1379332.47	10.50	17.50
477457.31	1379333.84	10.00	13.00
477507.29	1379335.20	11.50	16.00
477557.27	1379336.58	19.00	18.00
477605.88	1379387.92	15.00	21.00
477455.94	1379383.83	2.90	6.30

1100

F-174

TABLE F-17B

SOUTH FIELD
CIS GEOPHYSICAL ANALYSIS EM 34-3 MEASUREMENTS
OPERABLE UNIT 2 REMEDIAL INVESTIGATION
FERNALD ENVIRONMENTAL MANAGEMENT PROJECT

North Coordinate	East Coordinate	MMHOS/M (Unit)	
		Horizontal Result	Vertical Result
477954.39	1379447.48	25.00	14.50
478112.54	1379151.70	24.00	13.00
478111.17	1379201.69	20.00	16.50
478109.80	1379251.66	19.00	16.00
478051.61	1379550.17	25.00	14.00
478052.98	1379500.19	23.00	15.00
478054.35	1379450.22	23.00	16.00
478055.71	1379400.23	22.50	17.00
478057.08	1379350.25	24.00	16.00
478058.45	1379300.27	25.00	16.00
478059.82	1379250.28	23.50	18.00
478061.19	1379200.31	20.00	20.00
478062.56	1379150.33	23.00	14.00
478012.57	1379148.97	23.00	15.00
478011.21	1379198.95	26.00	13.50
478009.84	1379248.92	24.00	17.00
478008.47	1379298.91	27.00	14.00
478007.10	1379348.89	24.00	18.00
478005.73	1379398.88	21.00	15.00
478004.37	1379448.86	23.00	9.00
478003.00	1379498.83	25.00	14.50
478001.63	1379548.81	25.00	15.00
478000.26	1379598.80	25.50	17.50
477998.89	1379648.78	27.00	12.50
477996.16	1379748.73	26.50	14.50
477946.18	1379747.36	25.00	21.00
477947.55	1379697.39	26.00	12.00
477948.91	1379647.41	26.00	15.00
477950.28	1379597.42	25.00	19.00
477951.65	1379547.44	21.50	19.00
477953.02	1379497.45	23.00	15.00
477954.39	1379447.48	25.00	14.50
477955.75	1379397.50	23.00	14.00
477957.12	1379347.52	24.50	12.50
477958.49	1379297.53	26.00	14.50
477959.86	1379247.55	24.00	15.00
477961.23	1379197.58	21.50	15.00

1101

TABLE F-17B
(Continued)

North Coordinate	East Coordinate	MMHOS/M (Unit)	
		Horizontal Result	Vertical Result
477962.59	1379147.59	23.00	18.00
477912.61	1379146.23	27.00	22.50
477911.24	1379196.22	19.00	21.00
477909.87	1379246.19	24.00	14.00
477908.50	1379296.17	24.00	18.50
477907.14	1379346.16	22.50	15.00
477905.77	1379396.14	22.00	17.50
477904.40	1379446.13	23.00	25.00
477903.03	1379496.09	22.00	20.00
477901.66	1379546.08	23.00	17.00
477900.30	1379596.06	24.50	14.50
477898.93	1379646.05	21.50	12.00
477897.56	1379696.03	24.50	14.00
477896.19	1379746.00	25.00	15.00
477894.82	1379795.98	26.50	34.00
477893.46	1379845.97	27.00	12.00
477843.48	1379844.59	25.00	18.00
477844.84	1379794.61	26.00	15.00
477846.21	1379744.63	25.00	18.00
477847.58	1379694.66	25.50	17.50
477848.95	1379644.67	25.00	15.50
477850.32	1379594.69	24.00	18.00
477851.68	1379544.70	23.00	13.00
477853.05	1379494.72	23.50	34.00
477854.42	1379444.75	22.50	18.50
477855.79	1379394.77	24.00	21.00
477857.16	1379344.78	21.50	15.00
477858.52	1379294.80	20.00	12.00
477859.89	1379244.81	21.00	15.50
477861.26	1379194.84	26.00	16.00
477862.63	1379144.86	44.00	47.00
477809.91	1379243.45	19.50	6.00
477808.54	1379293.44	23.00	20.50
477807.18	1379343.42	23.00	13.00
477805.81	1379393.41	20.00	27.00
477804.44	1379443.39	25.00	17.00
477803.07	1379493.36	24.00	14.00
477801.70	1379543.34	22.00	19.00
477800.34	1379593.33	26.00	26.00
477798.97	1379643.31	24.50	21.00
477797.60	1379693.30	27.00	12.50

TABLE F-17B
(Continued)

North Coordinate	East Coordinate	MMHOS/M (Unit)	
		Horizontal Result	Vertical Result
477796.23	1379743.27	26.00	18.00
477794.86	1379793.25	27.00	16.00
477793.50	1379843.23	26.50	19.00
477743.52	1379841.86	27.00	17.00
477744.88	1379791.88	30.00	16.50
477746.25	1379741.89	27.00	15.00
477747.62	1379691.92	25.00	21.00
477748.99	1379641.94	24.50	15.00
477750.36	1379591.95	24.00	19.00
477751.72	1379541.97	25.00	15.00
477753.09	1379491.98	23.00	15.00
477754.46	1379442.02	26.00	12.00
477704.48	1379440.66	30.00	-100.00
477703.11	1379490.63	23.50	16.00
477701.74	1379540.61	26.00	19.00
477700.38	1379590.59	26.00	17.50
477699.01	1379640.58	24.00	18.00
477697.64	1379690.56	26.00	16.00
477696.27	1379740.53	27.00	15.00
477694.90	1379790.52	28.00	18.00
477644.92	1379789.14	26.50	17.50
477646.29	1379739.16	26.50	13.00
477647.66	1379689.19	26.50	14.00
477649.02	1379639.20	25.50	16.50
477650.39	1379589.22	24.50	17.00
477651.76	1379539.23	25.00	16.00
477653.13	1379489.25	25.00	14.00
477603.14	1379487.88	22.00	15.00
477601.78	1379537.86	22.50	12.00
477600.41	1379587.84	26.00	14.50
477599.04	1379637.83	24.50	17.50
477597.68	1379687.81	26.00	16.00
477596.31	1379737.78	24.00	14.00
477499.08	1379635.09	24.00	14.50
477501.82	1379535.13	24.00	19.50
477401.85	1379532.39	21.50	15.00
477399.12	1379632.36	22.00	9.50
477301.89	1379529.66	27.00	19.00
477199.19	1379626.89	21.00	19.50
477099.23	1379624.16	8.50	7.00
477310.10	1379229.77	67.00	35.00

5174

TABLE F-17B
(Continued)

North Coordinate	East Coordinate	MMHOS/M (Unit)	
		Horizontal Result	Vertical Result
477407.32	1379332.47	15.00	16.50
477410.06	1379232.50	8.50	10.50
477412.80	1379132.55	7.00	9.00
477512.76	1379135.28	9.50	8.50
477510.02	1379235.23	13.50	8.50
477507.29	1379335.20	15.00	7.50
477609.98	1379237.97	15.00	12.50
477612.72	1379138.02	28.00	7.00
477088.00	1379610.00	9.00	7.50
477101.00	1379452.00	8.50	9.40
477085.00	1379276.00	9.80	8.80
477208.00	1379145.00	9.60	10.50
477197.00	1379332.00	11.50	9.50
476982.00	1379620.00	6.00	6.50
476939.00	1379507.00	5.50	7.50
477025.00	1379390.00	6.50	7.50
476852.00	1379523.00	10.00	7.00
478102.00	1379456.00	22.00	12.00
478105.00	1379523.00	20.50	13.50
478103.00	1379588.00	23.00	15.50
478105.00	1379666.00	23.00	13.50
478106.00	1379738.00	24.00	15.00
478103.00	1379817.00	26.50	14.50
478105.00	1379881.00	24.50	16.00
478102.00	1379923.00	22.50	13.50
478236.00	1379872.00	25.50	13.50
478233.00	1379785.00	25.00	15.00
478236.00	1379702.00	27.00	16.50
478239.00	1379606.00	27.00	13.00
478237.00	1379523.00	24.00	13.00
478236.00	1379432.00	21.00	13.50
478231.00	1379334.00	20.00	11.50
478229.00	1379253.00	19.50	13.50
478234.00	1379162.00	19.50	18.00
476229.00	1379516.00	15.00	8.00
476331.00	1379217.00	9.00	9.50
476856.00	1379247.00	10.50	10.50

1104

5174

FIGURE F-17A

CIS GEOPHYSICAL ANALYSIS
EM 31 HORIZONTAL CONTOUR MAP
(CONTOUR INTERVALS = 10 AND 100 MMHOS/M)

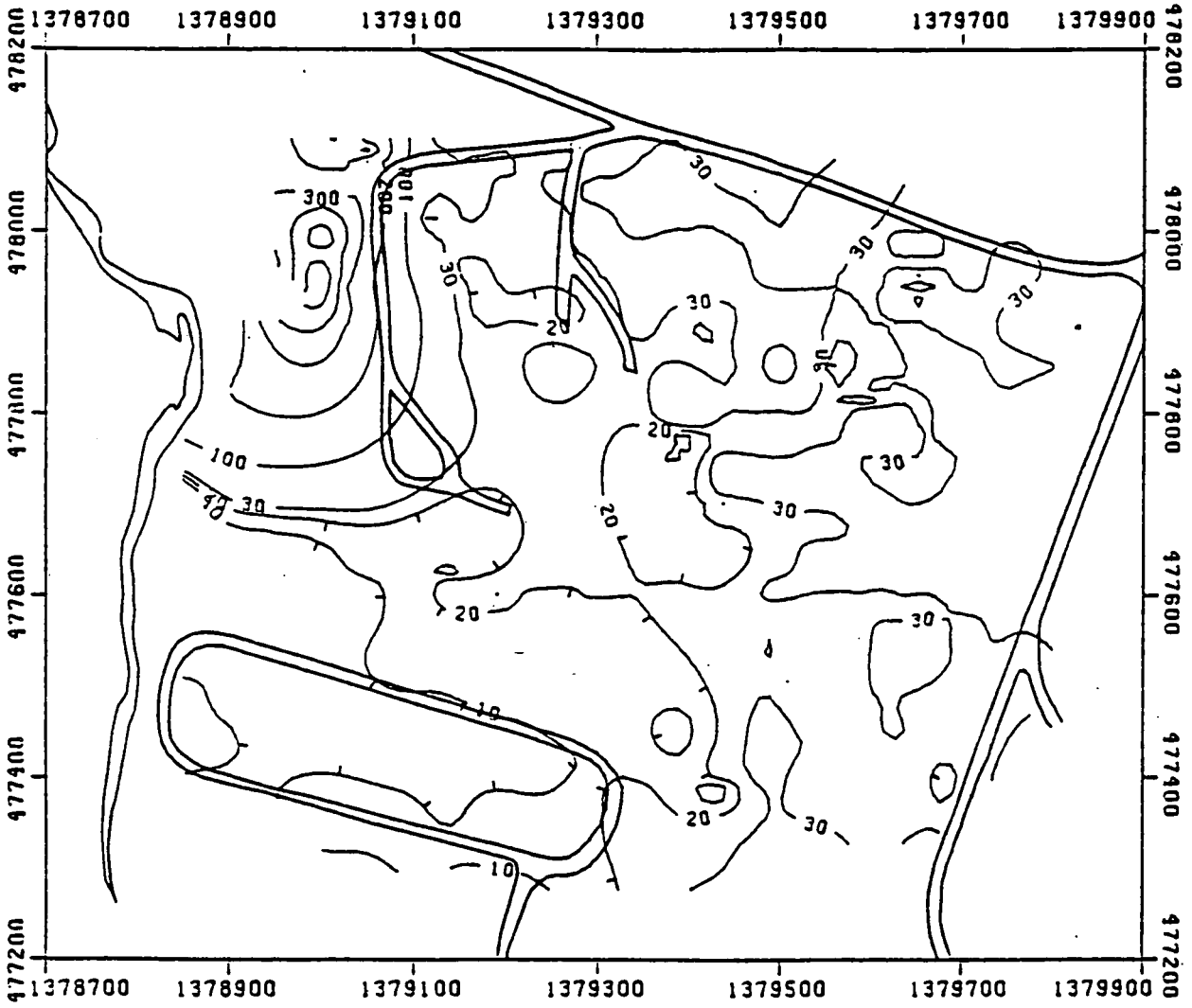

1105

FIGURE F-17B

CIS GEOPHYSICAL ANALYSIS
EM 31 VERTICAL CONTOUR MAP
(CONTOUR INTERVALS = 10 AND 100 MMHOS/M)

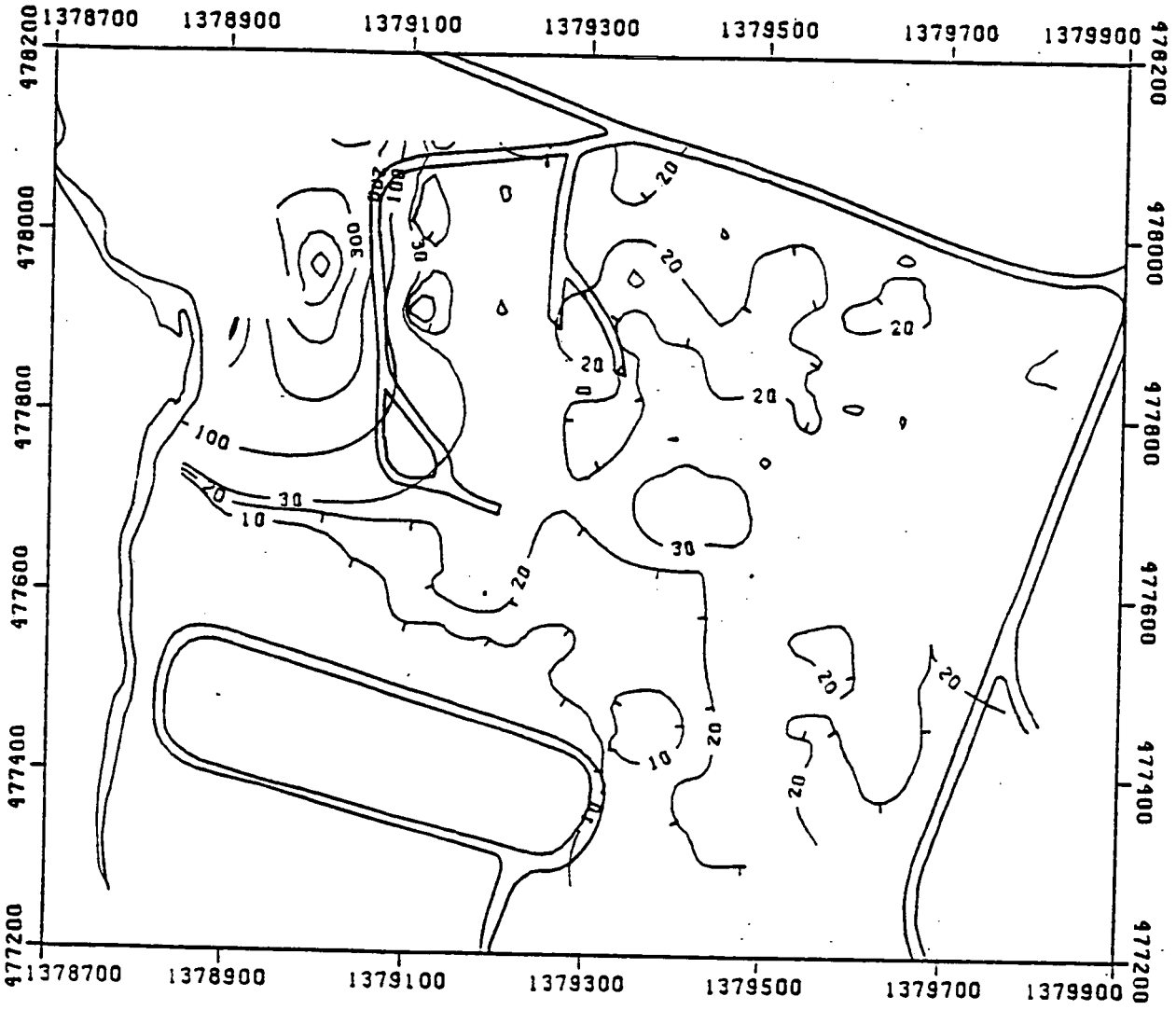

FIGURE F-17C

CIS GEOPHYSICAL ANALYSIS
EM 34-3 HORIZONTAL CONTOUR MAP
(CONTOUR INTERVALS = 10 AND 100 MMHOS/M)

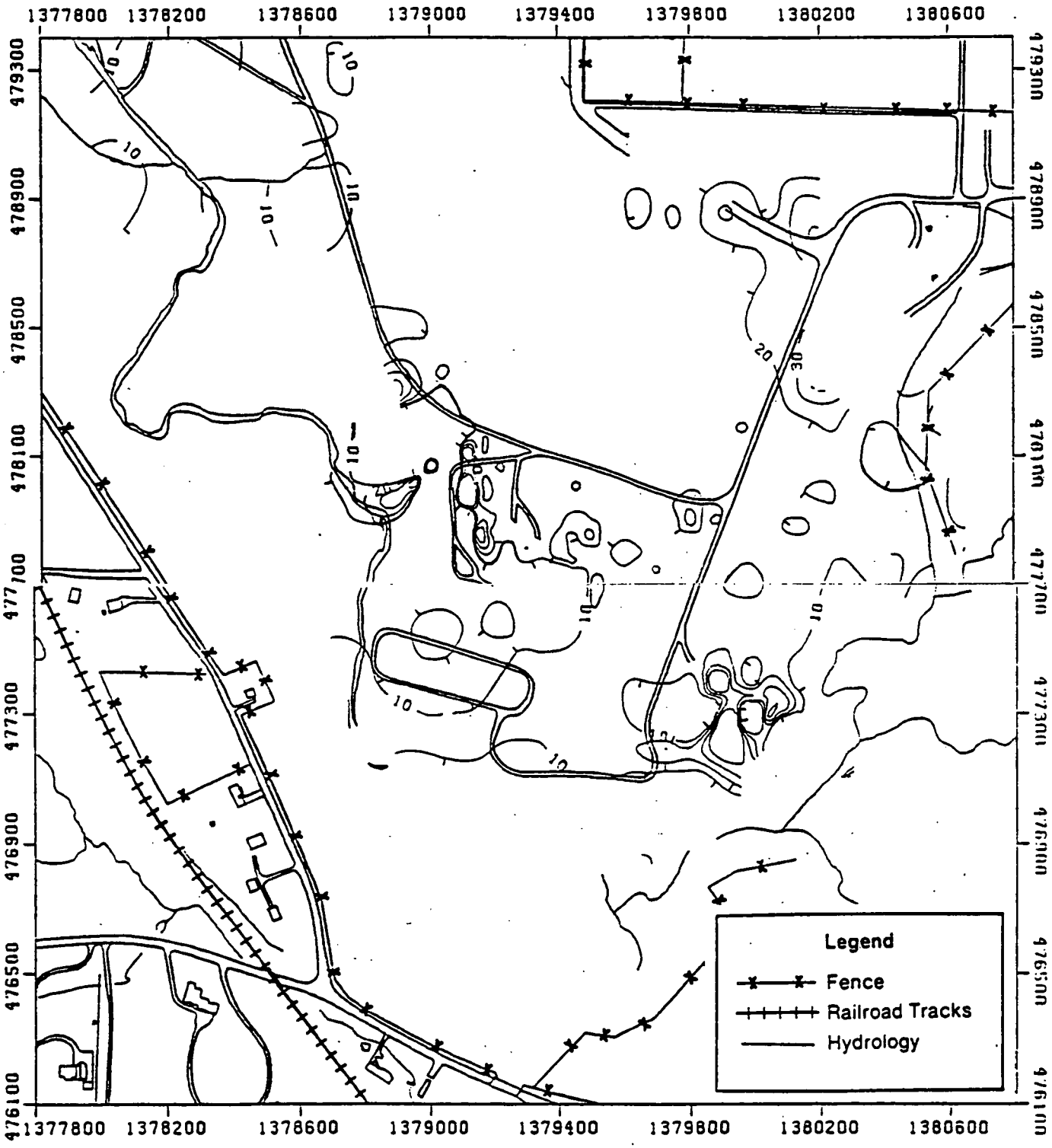

FIGURE F-17D
CIS GEOPHYSICAL ANALYSIS
EM 34-3 VERTICAL CONTOUR MAP
(CONTOUR INTERVALS = 10 AND 100 MMHOS/M)

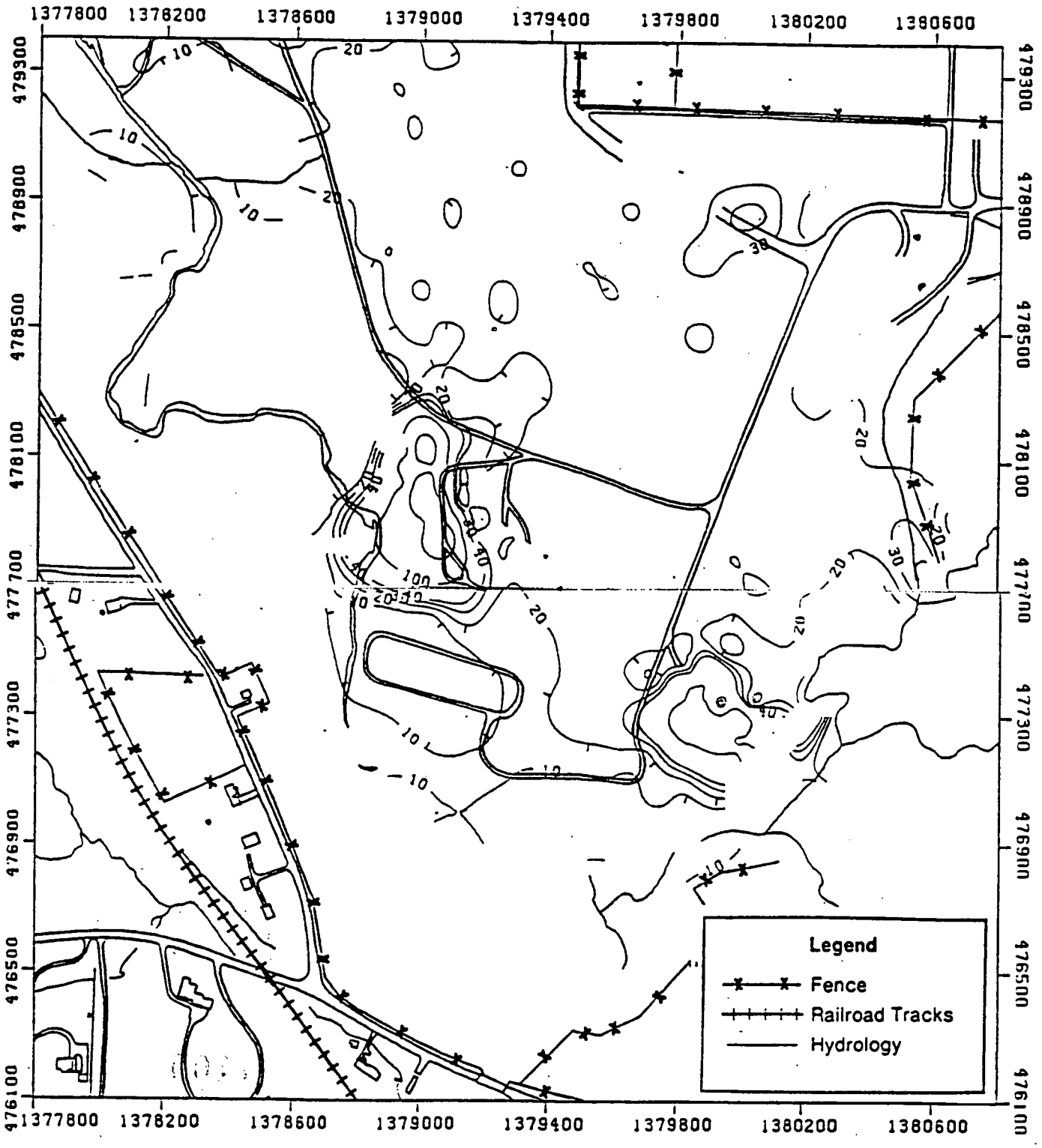

FIGURE F-17E

SOUTH FIELD
RI/FS PHASE II INVESTIGATION
GEOPHYSICAL INTERPRETATION

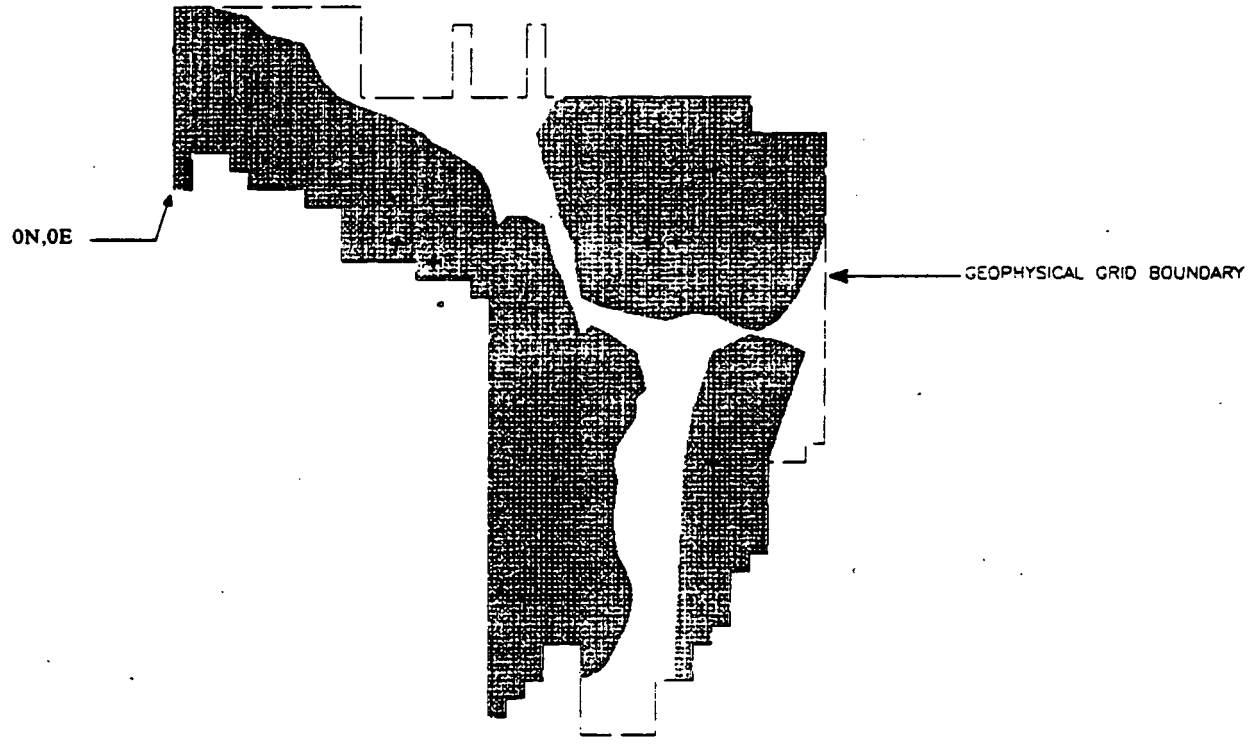

LEGEND

▒ – AREAS WITH MAGNETIC ANOMALIES

\+ – LOCATION OF EM INPHASE COMPONENT ANOMALIES

NOTES:

1. GEOPHYSICAL GRID POINT 0N, 0E CORRESPONDS TO N477,900 E1,347,600 OF THE STATE PLANER COORDINATE SYSTEM.

Scale 1:1600

100 0 100 200 300 400

(feet)

1109

FERNALD RI/FS — VISUAL CLASSIFICATION OF SOILS

PROJECT NUMBER: 602 3.2	PROJECT NAME: FMPC RI/FS		
BORING NUMBER: 1016	COORDINATES: NORTH 477,617.13 EAST 1,379,149.06	DATE:	10/15/87
GROUND ELEVATION: N/A	GWL: Depth N/A Date/Time N/A	DATE STARTED:	10/15/87
ENGINEER/GEOLOGIST: WILL KEGLEY	Depth N/A Date/Time N/A	DATE COMPLETED:	10/16/87
DRILLING METHODS: CABLE-TOOL		PAGE 1 OF 2	

DEPTH	SAMPLE / DATE / TIME	BLOWS ON SAMPLE	RECOVERY (INCHES)		USCS SYMBOL	TSF	REMARKS
0.0 1.5	007232 10/15/87 1445	2 2 5	16	MEDIUM STIFF, BLACK (2.5Y 2/), SILT, SOME SAND, FLYASH, DRY.	ML	0.1	Hnu=0 ppm α =0 cpm BΓ =40-80 cpm
3.0	007233 10/15/87 1500	4 4 3	14	LOOSE, DARK YELLOWISH BROWN (10YR 4/4), SILTY SAND, DRY.	SM	N/A	Hnu=0 ppm α =0 cpm BΓ =40-80 cpm
4.5	007234 10/15/87 1510	4 5 4	13	LOOSE, BROWNISH YELLOW (10YR 6/8), SAND, SOME SILT, TRACE CLAY, DRY.	SM	N/A	Hnu=0 ppm α =0 cpm BΓ =40-80 cpm
6.0	007235 10/15/87 1520	5 7 12	14	MEDIUM DENSE, YELLOWISH BROWN (10YR 5/6), GRAVELLY SAND, TRACE SILT, DRY.	SW	N/A	Hnu=0 ppm α =0 cpm BΓ =40-80 cpm
7.5	007236 10/15/87 1525	15 24 16	14	DENSE, YELLOWISH BROWN (10YR 5/6), GRAVELLY SAND, DRY.	SW	N/A	Hnu=0 ppm α =0 cpm BΓ =160 cpm
9.0	007237 10/15/87 1530	13 85 42	17	VERY DENSE, LIGHT YELLOWISH BROWN (10YR 6/4), GRAVELLY SAND, TRACE CLAY, DRY.	SW	N/A	Hnu=0 ppm α =0 cpm BΓ =40-80 cpm
10.5	007223 007238 10/15/87 1700	15 23 24	12	DENSE, DARK YELLOWISH BROWN (10YR 4/4), GRAVELLY SAND, DRY.	SW	N/A	Hnu=0 ppm α =0 cpm BΓ =40-80 cpm
12.0	007239 10/15/87 1720	15 16 18	10	DENSE, REDDISH YELLOW (7.5YR 7/6), GRAVELLY SAND, DRY.	SW	N/A	Hnu=0 ppm α =0 cpm BΓ =40-80 cpm
13.5	007240 10/15/87 1735	9 12 26	8	DENSE, REDDISH YELLOW (7.5YR 6/6), GRAVELLY SAND, DRY.	SW	0.1	Hnu=0 ppm α =0 cpm BΓ =40-80 cpm
15.0	007241 10/15/87 1750	8 10 13	10	MEDIUM DENSE, LIGHT BROWN (7.5YR 6/4), SAND, DRY.	SP	0.1	Hnu=0 ppm α =0 cpm BΓ =40-80 cpm
16.5	007242 10/16/87 0925	2 6 10	12	MEDIUM DENSE, DARK YELLOWISH BROWN (10YR 4/4), SAND, TRACE GRAVEL, WET.	SP	N/A	Hnu=0 ppm α =0 cpm BΓ =40-80 cpm
18.0	007243 10/16/87 1015	4 13 14	14	MEDIUM DENSE, STRONG BROWN (7.5YR 5/6), SAND, TRACE GRAVEL, WET.	SP	N/A	Hnu=0 ppm α =0 cpm BΓ =40-80 cpm
19.5	007244 10/16/87 1040	3 4 7	17	MEDIUM DENSE, DARK YELLOWISH BROWN (10YR 4/4), SAND, WET.	SP	N/A	Hnu=0 ppm α =0 cpm BΓ =40-80 cpm

1110

PROJECT NUMBER: 602 3.2	PROJECT NAME: FMPC RI/FS		
BORING NUMBER: 1016	COORDINATES: NORTH 477,617.13 EAST 1,379,149.06	DATE:	10/15/87
GROUND ELEVATION: N/A	GWL: Depth N/A Date/Time N/A	DATE STARTED:	10/15/87
ENGINEER/GEOLOGIST: WILL KEGLEY	Depth N/A Date/Time N/A	DATE COMPLETED:	10/16/87
DRILLING METHODS: CABLE-TOOL		PAGE 2	OF 2

DEPTH	SAMPLE	DATE TIME	BLOWS ON SAMPLE	RECOVERY	INCHES		USCS SYMBOL	TSF	REMARKS
21.0	007350	10/16/87 1100	2 7 13	18		MEDIUM DENSE, DARK YELLOWISH BROWN (10YR 4/4), SAND, TRACE GRAVEL, WET.	SP	N/A	Hnu=0 ppm α =0 cpm βΓ =40-80 cpm
22.5	007351	10/16/87	4 9 10	18		MEDIUM DENSE, DARK YELLOWISH BROWN (10YR 4/4), SAND, TRACE GRAVEL, WET.	SP	N/A	Hnu=0 ppm α =0 cpm βΓ =40-80 cpm
						BOTTOM OF BORING 22.5			

NOTES:
MONITORING WELL INSTALLED.

PROJECT NUMBER: 602 3.2	PROJECT NAME: CRU2 RI PHASE I FIELD INVESTIGATION	
BORING NUMBER: 1046	COORDINATES: NORTH 478054.76 EAST 1379428.51	DATE:06-FEB-88
GROUND ELEVATION: 576.5	GWL: Depth Date/Time	DATE STARTED: 06-FEB-88
ENGINEER/GEOLOGIST: T. SULLIVAN	Depth Date/Time	DATE COMPLETE: 09-FEB-88
DRILLING METHOD: CABLE-TOOL DRILLING		

DEPTH	SAMPLE	DATE TIME	BLOWS ON	SAMPLE	RECOVERY	INCHES		USCS SYMBOL	TSF	REMARKS
1.5	008014	02/06/88 11:20	5 5 7		14		HARD DARK BROWNISH GRAY 10YR 3/1 SILT (TOPSOIL), ORGANIC RICH, DRY. HARD YELLOW-BROWN 10YR 3/6 SILTY CLAY, DRY.	OL CL	>5 >5	PID=0 ppm α=2 ppm βΓ=60 cpm
1.5 3.0	008015	02/06/88 11:28	6 9 14		17		HARD, YELLOW-BROWN 10YR 3/6 SILTY CLAY, DRY.	CL	3.0	PID=0 ppm α=2 ppm βΓ=60 cpm
3.0 4.5	008016	02/06/88 11:35	10 8 7		16		SOFT, YELLOW-BROWN 10YR 3/6 SILTY CLAY, DRY.	CL	0.5	PID=0 ppm α=0 ppm βΓ=80 cpm
4.5 6.0	008017	02/06/88 11:40	7 11 15		18		SOFT YELLOW-BROWN 10YR 3/4 SILT, TRACE SAND, WET.	ML	1.0	PID=0 ppm α=2 ppm βΓ=60 cpm
6.0 7.5	008018	02/06/88 11:45	5 10 15		17		MEDIUM DENSE, YELLOW-BROWN 10YR 3/4 FINE GRAINED SAND, SOME SILT, WET.	SM	N/A	PID=0 ppm α=0 ppm βΓ=100 cpm
7.5 9.0	008019	02/07/88 14:55	4 7 7		11		MEDIUM DENSE, YELLOW-BROWN 10YR, 4/6 FINE GRAINED SAND AND SILT, WET. VERY STIFF, YELLOW-BROWN 10YR 4/4 CLAY, TRACE SILT, DRY. VERY STIFF, GRAY 10YR, 4/1 CLAY, DRY.	SM CL CL	N/A 3.0 3.5	PID=0 ppm α=0 ppm βΓ=100 cpm
9.0 10.5	008020	02/07/88 16:45	3 5 4		11		STIFF, GRAY 10YR 5/1 CLAY, SOME SILT, DRY.	CL	1.25	PID=0 ppm α=2 ppm βΓ=100 cpm
12.0 13.5	008022	02/08/88 08:15	0 4 6		8		LOOSE, GRAY-BROWN 10YR 4/2 FINE GRAINED SAND, SOME SILT, MOIST. VERY STIFF, GRAY 10YR 4/1 CLAY, TRACE SILT, MOIST.	SM CL	N/A 2.2	PID=0 ppm α=0 ppm βΓ=100 cpm
13.5 15.0	008023	02/08/88 08:25	6 6 5		7		STIFF, GRAY 10YR 4/1 CLAY, TRACE SILT, MOIST. MEDIUM DENSE, GRAY-BROWN 10YR 3/2 SAND, SOME SILT AND CLAY, MOIST.	CL SM	1.5 N/A	PID=0 ppm α=2 ppm βΓ=80 cpm
15.0 16.5	008026	02/08/88 08:40	N/A		N/A			N/A	N/A	
16.5 18.0	008027	02/08/88 09:10	5 4 5		13		STIFF, GRAY 10YR 4/1 SAND, SOME SILT AND CLAY, TRACE GRAVEL, MOIST. VERY STIULL, GRAY-BROWN 10YR 3/1 CLAY, SOME GRAVEL, DRY.	SM CL	N/A 4	PID=0 ppm α=2 ppm βΓ=100 cpm
18.0 19.5	008028	02/08/88 09:40	5 6 8		8		STIFF, GRAY 10YR 5/1 CLAY, SOME DRAVEL, DRY.	CL	1.25	PID=0 ppm α=0 ppm βΓ=100 cpm
19.5 21.0	008029	02/08/88 10:25	3 3 6		9		STIFF, GRAY 10YR 4/1 CLAY, SOME SILT, TRACE GRAVEL, DRY.	CL	1.0	PID=0 ppm α=0 ppm βΓ=80 cpm

NOTES:

SAA = Same as Above
PID = Photoionization Detector
N/A = Not Applicable

PROJECT NUMBER: 602 3.2	PROJECT NAME: CRU2 RI PHASE I FIELD INVESTIGATION	
BORING NUMBER: 1046	COORDINATES: NORTH 478054.76 EAST 1379428.51	DATE:06-FEB-88
GROUND ELEVATION: 576.5	GWL: Depth Date/Time	DATE STARTED: 06-FEB-88
ENGINEER/GEOLOGIST: T. SULLIVAN	Depth Date/Time	DATE COMPLETE: 09-FEB-88
DRILLING METHOD: CABLE-TOOL DRILLING		

DEPTH	SAMPLE	DATE TIME	BLOWS ON SAMPLER	RECOVERY INCHES		USCS SYMBOL	TSF	REMARKS
21.0 22.5	008030 02/08/88 10:40	3 13 18	18	HARD, GREEN-GRAY 5Y 4/1 CLAY, SOME GRAVEL AND PEBBLES, WOOD FRAGMENTS, DRY.		CL	>5	PID=0 ppm α=0 ppm βΓ=110 cpm
22.5 24.0	008031 02/08/88 11:45	8 18 20	13	HARD, GREEN-GRAY 5Y 4/1 CLAY, SOME GRAVEL AND PEBBLES, DRY. VERY STIFF, GREEN-GRAY 5Y 4/1 CLAY, SOME GRAVEL, DRY.		CL CL	>5 3.0	PID=0 ppm α=2 ppm βΓ=100 cpm
24.0 25.5	008032 02/08/88 14:00	9 19 23	16	VERY STIFF, GREEN-GRAY 5Y 4/1 CLAY, SOME GRAVEL, DRY. HARD, YELLOW-BROWN 10YR 4/4 CLAY, SOME GRAVEL, DRY. DENSE, BROWN 10YR 4/3 SAND, SOME SILT AND GRAVEL, TRACE CLAY, DRY.		CL SP	>5 N/A	PID=0 ppm α=0 ppm βΓ=100 cpm
27.0 28.5	008033 02/08/88 14:55	14 23 24	14	DENSE YELLOW-BROWN 10YR 4/4 SAND, SOME GRAVEL AND SILT, DRY.		SP	N/A	PID=0 ppm α=2 ppm βΓ=80 cpm

NOTES:

SAA = Same as Above
PID = Photoionization Detector
N/A = Not Applicable

1113

FERNALD RI/FS — VISUAL CLASSIFICATION OF SOILS — 5174

PROJECT NUMBER: 602 3.2	PROJECT NAME: FMPC RI/FS	
BORING NUMBER: 1065	COORDINATES: NORTH 477,860.01 EAST 1,380,415.92	DATE: 10/04/87
GROUND ELEVATION:	GWL: Depth N/A Date/Time N/A	DATE STARTED: 10/04/87
ENGINEER/GEOLOGIST: D OAKLEY	Depth N/A Date/Time N/A	DATE COMPLETED: 10/06/87
DRILLING METHODS: CABLE-TOOL		PAGE 1 OF 1

DEPTH	SAMPLE	DATE TIME	BLOWS ON SAMPLE	RECOVERY	INCHES	USCS SYMBOL	TSF	REMARKS
0.0 14.0								

BOTTOM OF BORING 14.0

NOTES:
SEE BORING LOG #2065 FOR STRATIGRAPHY. NO SAMPLES TAKEN FROM THIS BORING.
MONITORING WELL INSTALLED.

1114

5184

FERNALD RI/FS — VISUAL CLASSIFICATION OF SOILS — SF

PROJECT NUMBER: 602 3.7	PROJECT NAME: FMPC RI/FS		
BORING NUMBER: 1455	COORDINATES: NORTH 477,915 EAST 1,379,479	DATE:	11/04/89
GROUND ELEVATION: 577.9	GWL: Depth N/A Date/Time N/A	DATE STARTED:	11/04/
ENGINEER/GEOLOGIST: E TROLLINGER	Depth N/A Date/Time N/A	DATE COMPLETED:	11/05/89
DRILLING METHODS: CAT 225 B LC BACKHOE TRENCHING		PAGE 1	OF 1

DEPTH	SAMPLE	SAMPLE TIME	BLOWS/6"	SAMPLE RECOVERY		USCS SYMBOL	TSF	REMARKS
3.0 3.2	55900 55907 11/04/89 0930	N/A	N/A	LOOSE, BROWN (7.5YR 4/2), SILTY SAND, TRACE GRAVEL (0.5-1.5 IN.).		SM	N/A	Hnu=0.4 ppm α =0 cpm βΓ =60-100 cpm ESP1=16,000 cpm
3.75 3.95	55901 55908 11/04/89 0935	N/A	N/A	VERY STIFF, YELLOWISH BROWN (10YR 5/6) MOTTLED GRAY (10YR 5/1), TRACE OF SILTY LAYERS, TRACE GRAVEL (0.5-1.0 IN), LOW TO MEDIUM PLASTICITY, MOIST.		CL	2.0	Hnu=0.0 ppm α =0 cpm βΓ =60 cpm ESP/SPA-3= 16,100 cpm
BOTTOM OF EXCAVATION								

NOTES:
THIS EXCAVATION AND SAMPLING AT TRENCH #1.
TOP 8 INCHES CONSISTS OF OVERGROWTH GRASS, ROOTS, ETC
SAMPLES 55900, 55901 ARE FOR FULL RAD.
FILL MATERIAL MADE FROM NON-NATIVE SOIL. SOME CONSTRUCTION RUBBLE EVIDENT IN FILL. CONCRETE FOUND (0.0-1.5 FT); METAL SCRAP (βΓ=1000 cpm) FROM 0.5-1.0 FT.
FILL/TILL BOUNDARY AT 3.6 FT.

FERNALD RI/FS

VISUAL CLASSIFICATION OF SOILS

PROJECT NUMBER: 602 3.7	PROJECT NAME: FMPC RI/FS	
BORING NUMBER: 1456	COORDINATES: NORTH 477,940 EAST 1,379,479	DATE: 11/04/89
GROUND ELEVATION: 577.9	GWL: Depth N/A Date/Time N/A	DATE STARTED: 11/04/89
ENGINEER/GEOLOGIST: E TROLLINGER	Depth N/A Date/Time N/A	DATE COMPLETED: 11/05/89
DRILLING METHODS: CAT 225B LC		PAGE 1 OF 1

DEPTH	SAMPLE	BLOWS ON SAMPLE	RECOVERY	INCHES		USCS SOIL SYMBOL	TSF	REMARKS
3.75 3.9	55902 55909 11/04/89 0955	N/A	N/A		LOOSE, BROWN (7.5YR 4/2), SILTY SAND, TRACE GRAVEL (0.5-2.5 IN), TRACE CLAY, SLIGHTLY COHESIVE, MOIST.	SM	N/A	Hnu=0.0 ppm α =0 cpm βΓ =100-140 cpm ESP1=14,400 cpm
4.25 4.4	55903 55910 11/04/89 1000	N/A	N/A		VERY STIFF, MOTTLED GRAY (10YR 5/1) WITH YELLOWISH BROWN WITH 10YR 5/6), CLAY, TRACE FINE GRAVEL (0.5-1.0 IN), MEDIUM PLASTICITY, MOIST.	CL	2.0	Hnu=0.0 ppm α =0 cpm βΓ =100 cpm ESP1= 14,400 cpm
					BOTTOM OF EXCAVATION			

NOTES:
THIS EXCAVATION AND SAMPLING AT TRENCH #1.
TOP 8 INCHES CONSISTS OF OVERGROWTH GRASS, ROOTS, ETC.
FILL MATERIAL CONSISTS OF CONSTRUCTION RUBBLE, NON-NATIVE SOIL, CONCRETE, ASPHALT, AND METAL SCRAP.
FILL/TILL BOUNDARY AT 4.0 FT.
SAMPLES 55902, 55903 ARE FOR FULL RAD. HSL SAMPLE #55906 TAKEN AT 3.75 FT.

1116

FERNALD RI/FS — VISUAL CLASSIFICATION OF SOILS — SF

PROJECT NUMBER: 602 3.7	PROJECT NAME: FMPC RI/FS		
BORING NUMBER: 1457	COORDINATES: NORTH 477,965 EAST 1,379,479	DATE:	11/04/89
GROUND ELEVATION: 577.3	GWL: Depth N/A Date/Time N/A	DATE STARTED:	11/04/89
ENGINEER/GEOLOGIST: E TROLLINGER	Depth N/A Date/Time N/A	DATE COMPLETED:	11/05/89
DRILLING METHODS: CAT 225B LC		PAGE 1 OF 1	

DEPTH	SAMPLE	BLOWS ON	SAMPLE	RECOVERY	INCHES		USCS SYMBOL	TSF	REMARKS
4.0 4.2	55904 55911 11/04/89 1030	N/A		N/A		LOOSE, BROWN (7.5YR 4/2), SILTY SAND, SOME GRAVEL (0.5-2.5 IN), SLIGHTLY COHESIVE, MOIST.	SM	N/A	Hnu=0.2 ppm α =0 cpm βΓ =200-400 cpm ESP1=35,000 cpm
4.4 4.6	55905 55912 11/04/89 1040	N/A		N/A		VERY STIFF, YELLOWISH BROWN (10YR 5/6), CLAY, TRACE OF SILTY LAYERS THROUGHOUT, SOME GRAVEL (0.5-1.5 IN), LOW TO MEDIUM PLASTICITY, MOIST.	CL	2.0	Hnu=0.2 ppm α =0 cpm βΓ =60-80 cpm ESP1=31,000 cpm
						BOTTOM OF EXCAVATION			

NOTES:
THIS EXCAVATION AND SAMPLING AT TRENCH #1.
TOP 8 INCHES OVERGROWTH GRASS, WEEDS, ROOTS.
FILL COMPOSED OF CONSTRUCTION RUBBLE, CONCRETE, ASPHALT, ORGANIC ROOTS, AND SILTY SAND WITH GRAVEL.
FILL/TILL BOUNDARY AT 4.0 FT.
SAMPLES 55904, 55905 ARE FOR FULL RAD.

1117

5174 SF

FERNALD RI/FS

VISUAL CLASSIFICATION OF SOILS

PROJECT NUMBER: 602 3.7	PROJECT NAME: FMPC RI/FS	
BORING NUMBER: 1458	COORDINATES: NORTH 477,880 EAST 1,379,631	DATE: 11/06/89
GROUND ELEVATION: 578.6	GWL: Depth N/A Date/Time N/A	DATE STARTED: 11/06/89
ENGINEER/GEOLOGIST: E TROLLINGER	Depth N/A Date/Time N/A	DATE COMPLETED: 11/06/89
DRILLING METHODS: BACKHOE TRENCH CAT 225 B LC		PAGE 1 OF 1

DEPTH	SAMPLE	SAMPLE TIME	BLOWS ON SAMPLE	SAMPLE RECOVERY	INCHES		USCS SYMBOL	TSF	REMARKS
3.8 4.0	55913 55920 11/06/89 0900		N/A	N/A	LOOSE, BROWN (7.5YR 4/2), SILTY SAND, TRACE GRAVEL (0.5-3.5 IN), TRACE OF CLAYEY LENSES OR LAYERS, MOIST.		SM	N/A	Hnu=0.0 ppm α =0 cpm βΓ =100-200 cpm ESP1=13,000 cpm
4.5 4.7	55914 55921 11/06/89 0920		N/A	N/A	VERY STIFF, GRAYISH BROWN (10YR 4/2), CLAY, TRACE SILT, TRACE GRAVEL (0.5-1.0 IN), LOW PLASTICITY, MOIST.		CL	2.5	Hnu=0.0 ppm α =0 cpm βΓ =300-400 cpm ESP1=13,500 cpm
					BOTTOM OF EXCAVATION				

NOTES:
THIS EXCAVATION AND SAMPLING AT TRENCH #2, SOUTH END.
TOP 5 TO 8 INCHES OVERGROWTH. FILL MATERIAL FROM 0.0-4.0 FT CONSISTS OF OCCASIONAL PIECES OF CONSTRUCTION RUBBLE, CONCRETE (3-10 IN), ASPHALT, LESS THAN 1% OF FILL COMPOSED OF RUBBLE. FILL MATERIAL MAINLY SILTY SAND, TRACE OF GRAVEL (0.5-3.0 IN), MOIST.
FILL/TILL BOUNDARY AT 4.0 FT.
INTERFACE BETWEEN FILL AND TILL SHOWED SOME OXIDATION FROM MOISTURE OR WATER LEACHING, BETA GAMA READING WERE ELEVATED RELATIVE TO FILL MATERIAL.

1118

FERNALD RI/FS — VISUAL CLASSIFICATION OF SOILS — SF

PROJECT NUMBER: 602 3.7	PROJECT NAME: FMPC RI/FS		
BORING NUMBER: 1459	COORDINATES: NORTH 477,905 EAST 1,379,631	DATE:	11/06/89
GROUND ELEVATION: 581.0	GWL: Depth N/A Date/Time N/A	DATE STARTED:	11/06/89
ENGINEER/GEOLOGIST: E TROLLINGER	Depth N/A Date/Time N/A	DATE COMPLETED:	11/06/89
DRILLING METHODS: BACKHOE 225 B LC		PAGE 1	OF 1

DEPTH	SAMPLE	DATE TIME	BLOWS ON	SAMPLE	RECOVERY	INCHES		USCS SYMBOL	TSF	REMARKS
5.0 5.2	55915 55922	11/06/89 0950	N/A		N/A		LOOSE, BROWN (7.5YR 4/2), SILTY SAND, TRACE GRAVEL (0.5-1.0 IN), MOIST.	SM	N/A	Hnu=0 ppm α =0 cpm Bγ =100-120 cpm ESP1=11,500 cpm
6.0 6.2	55916 55923	11/06/89 1000	N/A		N/A		VERY STIFF, YELLOWISH BROWN (10YR 4/3), SILTY CLAY, TRACE GRAVEL (0.5 IN), MEDIUM PLASTICITY, MOIST.	CL	2.5	Hnu=0 ppm α =0 cpm Bγ =300-450 cpm ESP1=13,600 cpm
							BOTTOM OF EXCAVATION			

NOTES:
THIS EXCAVATION AND SAMPLING AT TRENCH #2.
TOP 5 TO 8 INCHES ORGANIC OVERGROWTH. FILL MATERIAL FROM SURFACE TO 5.5 FT (FILL/TILL BOUNDARY) CONSISTS OF OCCASIONAL PIECES OF CONSTRUCTION RUBBLE, CONCRETE, ASPHALT, METAL LESS THAN 1 %. FILL MATERIAL MOSTLY UNIFORM THROUGHOUT, SILTY SAND, TRACE OF GRAVEL (0.5-3.0 IN), MOIST. CONCRETE PIECES (5 IN TO 12 IN DIA), ASPHALT PIECES (5 IN TO 10 IN).
HSL SAMPLE #55919 TAKEN AT 5.0 FT.

1119

5174

FERNALD RI/FS

VISUAL CLASSIFICATION OF SOILS

PROJECT NUMBER: 602 3.7	PROJECT NAME: FMPC RI/FS	
BORING NUMBER: 1460	COORDINATES: NORTH 477,930 EAST 1,379,631	DATE: 11/06/89
GROUND ELEVATION: 578.8	GWL: Depth N/A Date/Time N/A	DATE STARTED: 11/06/89
ENGINEER/GEOLOGIST: E TROLLINGER	Depth N/A Date/Time N/A	DATE COMPLETED: 11/06/89
DRILLING METHODS: BACKHOE 225 B LC		PAGE 1 OF 1

DEPTH	SAMPLE	DATE TIME	BLOWS ON SAMPLER	RECOVERY	INCHES		USCS SYMBOL	TSF	REMARKS
3.5 3.7	55917 55924 11/06/89 1040		N/A	N/A	LOOSE, BROWN (7.5YR 4/2), SILTY SAND, TRACE TO SOME GRAVEL 0.5-1.0 IN), MOIST.		SM	N/A	Hnu=0.0 ppm α =0 cpm βΓ =150 cpm ESP1=13,200 cpm
4.25 4.45	55918 55925 11/06/89 1055		N/A	N/A	VERY STIFF, YELLOWISH BROWN TO GRAYISH BROWN (10YR 4/3), SILTY, CLAY, TRACE GRAVEL (0.5-1.0 IN), LOW PLASTICITY, MOIST.		CL	2.0	Hnu=0.0 ppm α =0 cpm βΓ =300-500 cpm ESP1=12,000 cpm
BOTTOM OF EXCAVATION									

NOTES:
THIS EXCAVATION AND SAMPLING AT TRENCH #2.
TOP 5 TO 8 INCHES ORGANIC OVERGROWTH. FILL MATERIAL (0.5-3.75 FT) COMPOSED MAINLY OF SOIL, SOME LARGE GRAVEL AND COBBLES, SEVERAL PIECES OF CONCRETE (0.5-1.0 FT), SEVERAL PIECES OF SCRAP METAL (0.5 FT LONG).

1120

5174

FERNALD RI/FS — VISUAL CLASSIFICATION OF SOILS — SF

PROJECT NUMBER: 602 3.7	PROJECT NAME: FMPC RI/FS	
BORING NUMBER: 1461	COORDINATES: NORTH 477,842 EAST 1,379,784	DATE: 11/07/89
GROUND ELEVATION: 579.2	GWL: Depth N/A Date/Time N/A	DATE STARTED: 11/07/
ENGINEER/GEOLOGIST: E TROLLINGER	Depth N/A Date/Time N/A	DATE COMPLETED: 11/07/89
DRILLING METHODS: BACKHOE CAT 225 B LC		PAGE 1 OF 1

DEPTH	SAMPLE	DATE TIME	BLOWS ON SAMPLE	RECOVERY	INCHES		USCS SYMBOL	TSF	REMARKS
4.0 4.2	55926 55933	11/07/89 1107	N/A	N/A	LOOSE, BROWN (7.5YR 4/2), SILTY SAND, SOME GRAVEL (0.5-3.0 IN), SLIGHTLY COHESIVE, MOIST.		SM	N/A	Hnu=0.2 ppm α =0 cpm βΓ =80-100 cpm ESP1/SPA-3= 7,630 cpm
5.0 5.2	55927 55934	11/07/89 1110	N/A	N/A	VERY STIFF, YELLOWISH BROWN (10YR 4/4) WITH (10YR 4/2) MOTTLED, SILTY CLAY, LOW TO MEDIUM PLASTICITY, MOIST.		CL	2.5	Hnu=0.2 ppm α =0 cpm βΓ =100-120 cpm ESP1/SPA-3= 12,600 cpm
BOTTOM OF EXCAVATION									

NOTES:
THIS EXCAVATION AND SAMPLING AT TRENCH #3, SOUTH END.
TOP 3 TO 5 INCHES OVERGROWTH. FILL MATERIAL IS PREDOMINATELY FREE OF CONSTRUCTION RUBBLE AT THIS LOCATION TO THE DEPTH OF THE GLACIAL FILL. ONE OR TWO PIECES OF CONCRETE FOUND (6 IN SIZE).
FILL/TILL BOUNDARY AT 4.25 FT.

FERNALD RI/FS — VISUAL CLASSIFICATION OF SOILS — 5174

PROJECT NUMBER: 602 3.7	PROJECT NAME: FMPC RI/FS	
BORING NUMBER: 1462	COORDINATES: NORTH 477,867 EAST 1,379,784	DATE: 11/07/89
GROUND ELEVATION: 579.1	GWL: Depth N/A Date/Time N/A	DATE STARTED: 11/07/89
ENGINEER/GEOLOGIST: E TROLLINGER	Depth N/A Date/Time N/A	DATE COMPLETED: 11/07/89
DRILLING METHODS: BACKHOE TRENCHING CAT 225 B LC		PAGE 1 OF 1

DEPTH	SAMPLE DATE TIME	BLOWS ON SAMPLE	RECOVERY	INCHES		USCS SYMBOL	TSF	REMARKS
4.25 4.4	55928 55935 11/07/89 1130	N/A	N/A		LOOSE, BROWN (7.5YR 4/2 TO 7.5YR 4/3), SILTY SAND, TRACE GRAVEL (0.5-3.0 IN), MOIST.	SM	N/A	Hnu=0.2 ppm α =0 cpm βΓ =100 cpm ESP1/SPA-3= 11,000 cpm
5.0 5.2	55929 55936 11/07/89 1135	N/A	N/A		STIFF, YELLOWISH BROWN (10YR 4/3), CLAY, SOME SILT, LOW PLASTICITY, SLIGHTLY OXIDIZED, MOIST.	CL	1.5	Hnu=0.2 ppm α =0 cpm βΓ =110-120 cpm ESP1/SPA-3= 11,000 cpm

BOTTOM OF EXCAVATION

NOTES:
THIS EXCAVATION AND SAMPLING AT TRENCH #3, MIDPOINT.
TOP 3 TO 5 IN OVERGROWTH. FILL MATERIAL IN THIS LOCATION IS FREE OF CONSTRUCTION RUBBLE AND NO CONCRETE WAS FOUND.
FILL IS PREDOMINATELY SILTY SAND WITH A TRACE OF GRAVEL.
FILL/TILL BOUNDARY AT 4.25 FT.
HSL SAMPLE #55932 TAKEN AT 4.0 FT DEPTH.
SAMPLES 55928, 55929 ARE FOR FULL RAD ANALYSIS ONLY, ARCHIVE SAMPLES FOR THE SAME INTERVAL WERE COLLECTED BUT HAVE DIFFERENT SAMPLE #'S.

1122

5174

FERNALD RI/FS — VISUAL CLASSIFICATION OF SOILS — SF

PROJECT NUMBER: 602 3.7	PROJECT NAME: FMPC RI/FS	
BORING NUMBER: 1463	COORDINATES: NORTH 477,892 EAST 1,379,784	DATE: 11/07/89
GROUND ELEVATION: 579.0	GWL: Depth N/A Date/Time N/A	DATE STARTED: 11/07
ENGINEER/GEOLOGIST: E TROLLINGER	Depth N/A Date/Time N/A	DATE COMPLETED: 11/07/89
DRILLING METHODS: CAT 225 B LC BACKHOE		PAGE 1 OF 1

DEPTH	SAMPLE	DATE TIME	BLOWS ON SAMPLE	RECOVERY	INCHES		USCS SYMBOL	TSF	REMARKS
3.5 3.7	55930 55937	11/07/89 1420	N/A	N/A	LOOSE TO MEDIUM DENSE, BROWN (7.5YR 4/2) TO GRAYISH BROWN (10 YR 4/3), SILTY SAND, MOIST.		SM	N/A	Hnu=0.2 ppm α =0 cpm βΓ =80-100 cpm ESP1/SPA-3= 12,000 cpm
4.5 4.7	55931 55938	11/07/89 1425	N/A	N/A	STIFF, BROWNISH GRAY (10YR 4/2) WITH YELLOWISH BROWN (10YR 4/4), SILTY CLAY, LOW PLASTICITY, MOIST.		CL	2.0	Hnu=0.2 ppm α =0 cpm βΓ =100 cpm ESP1/SPA-3= 12,500 cpm
					BOTTOM OF EXCAVATION				

NOTES:
THIS EXCAVATION AND SAMPLING AT TRENCH #3, NORTH END.
OVERGROWTH GRASS, ROOTS (0 TO 6 IN); FILL MATERIAL PREDOMINATELY FREE OF CONSTRUCTION RUBBLE. MATERIAL IS MAINLY SILTY SAND WITH GRAVEL (0.5-3.0 IN), MOIST, LOOSE DENSITY. TWO PIECES OF WOOD FOUND (2x4, 2 FT LONG), ERODED.
FILL/TILL BOUNDARY AT 4.0 FT.
SAMPLES 55930, 55931 ARE FOR FULL RAD ANALYSIS ONLY, ARCHIVE SAMPLES WERE COLLECTED AT SAME LOCATIONS.

1123

FERNALD RI/FS

VISUAL CLASSIFICATION OF SOILS

5174 SF

PROJECT NUMBER: 602 3.7	PROJECT NAME: FMPC RI/FS	
BORING NUMBER: 1464	COORDINATES: NORTH 477,734 EAST 1,379,566	DATE: 11/08/89
GROUND ELEVATION: 575.7	GWL: Depth N/A Date/Time N/A	DATE STARTED: 11/08/89
ENGINEER/GEOLOGIST: E TROLLINGER	Depth N/A Date/Time N/A	DATE COMPLETED: 11/08/89
DRILLING METHODS: CAT 225 BACKHOE (TRACKS)		PAGE 1 OF 1

DEPTH	SAMPLE	SAMPLE TIME	BLOWS ON SAMPLE	RECOVERY	INCHES		USCS SYMBOL	TSF	REMARKS
3.75 3.95	55939 55946 11/08/89 1100		N/A	N/A	LOOSE, BROWN TO GRAYISH BROWN (7.5YR 4/2 TO 10YR 4/3), SILTY SAND, 30-40% SILT, TRACE GRAVEL (0.5-3.0 IN), MOIST.		SM	N/A	Hnu=0.0 ppm α =0 cpm βΓ =60-90 cpm ESP/SPA-3= 8,000 cpm
4.5 4.7	55940 55947 11/08/89 1115		N/A	N/A	STIFF, YELLOWISH BROWN (10YR 4/4), SILTY CLAY, LOW PLASTICITY, MOIST.		CL	1.5	Hnu=0.0 ppm α =0 cpm βΓ =60-80 cpm ESP/SPA-3= 10,000 cpm
					BOTTOM OF EXCAVATION				

NOTES:
THIS EXCAVATION AND SAMPLING AT TRENCH #4, NORTH END.
OVERGROWTH GRASS, TOP 4 INCHES. FILL MATERIAL IS A SILTY SAND, WITH GRAVEL, (0.5-3.0 IN). CONDITIONS MOIST WITH LOOSE DENSITY, SOME (3 PIECES) CONCRETE FOUND, 2 FT LONG. MATERIAL MONITORED AS STOCKPILED, READINGS WERE BACKGROUND.
FILL/TILL BOUNDARY AT 4.5 FT.
SAMPLES 55939, 55940 ARE FULL RAD SAMPLES, ARCHIVE SAMPLES HAVE DIFFERENT NUMBERS.

1124

5174

PROJECT NUMBER: 602 3.7	PROJECT NAME: FMPC RI/FS	
BORING NUMBER: 1465	COORDINATES: NORTH 477,709 EAST 1,379,566	DATE: 11/08/89
GROUND ELEVATION: 575.5	GWL: Depth N/A Date/Time N/A	DATE STARTED: 11/08/89
ENGINEER/GEOLOGIST: E TROLLINGER	Depth N/A Date/Time N/A	DATE COMPLETED: 11/08/89
DRILLING METHODS: CAT 225 TRENCH BACKHOE TRUCK MOUNTED		PAGE 1 OF 1

DEPTH	SAMPLE	DATE TIME	BLOWS ON SAMPLE	SAMPLE RECOVERY	INCHES		USCS SYMBOL	TSF	REMARKS
3.5 3.7	55941 55948	11/08/89 1135	N/A	N/A	LOOSE, BROWN (7.5YR 4/2), SILTY SAND, CONSIDERABLE GRAVEL 0.5-3.0 IN), MOIST.		SM	N/A	Hnu=0.0 ppm α =0 cpm βΓ =60-100 cpm ESP/SPA-3= 9,000 cpm
4.5 4.7	55942 55949	11/08/89 1325	N/A	N/A	MEDIUM STIFF, YELLOWISH BROWN (10YR 4/4), SILTY CLAY, TRACE OF FINE GRAVEL (0.5 IN), LOW TO MEDIUM PLASTICITY, MOIST.		CL	1.0	Hnu=0.0 ppm α =0 cpm βΓ =100 cpm ESP/SPA-3= 11,000 cpm
BOTTOM OF EXCAVATION									

NOTES:
THIS EXCAVATION AND SAMPLING AT TRENCH #4, MIDPOINT.
TOP 5 INCHES OVERGROWTH GRASS, ROOTS. FILL MATERIAL IS A SILTY SAND WITH A TRACE OF GRAVEL (0.5-3.0 IN). THREE PIECES OF WOOD FOUND (βΓ=100 cpm) AS CONSTRUCTION RUBBLE. MATERIAL SCANNED AS IT WAS STOCKPILED, NO READINGS ABOVE BACKGROUND.
FILL/TILL BOUNDARY AT 3.75 FT.
SAMPLES 55941, 55942 ARE FULL RAD, ARCHIVE SAMPLES HAVE DIFFERENT NUMBERS.

FERNALD RI/FS — VISUAL CLASSIFICATION OF SOILS — SF

5174

PROJECT NUMBER: 602 3.7	PROJECT NAME: FMPC RI/FS	
BORING NUMBER: 1466	COORDINATES: NORTH 477,684 EAST 1,379,566	DATE: 11/08/89
GROUND ELEVATION: 575.3	GWL: Depth N/A Date/Time N/A	DATE STARTED: 11/08/89
ENGINEER/GEOLOGIST: E TROLLINGER	Depth N/A Date/Time N/A	DATE COMPLETED: 11/08/89
DRILLING METHODS: CAT 225 BACKHOE		PAGE 1 OF 1

DEPTH	SAMPLE ID / DATE / TIME	BLOWS ON SAMPLE	RECOVERY		USCS SYMBOL	TSF	REMARKS
3.0 3.2	55943 55950 11/08/89 1345	N/A	N/A	LOOSE, BROWN (7.5YR 4/2), SILTY SAND, TRACE GRAVEL (0.5-4.0 IN), MOIST.	SM	N/A	Hnu=0.0 ppm α =0 cpm BΓ =60-80 cpm ESP/SPA-3= 9,000 cpm
4.5 4.7	55944 55951 11/08/89 1350	N/A	N/A	MEDIUM STIFF, YELLOWISH BROWN (10YR 4/4), SILTY CLAY, TRACE FINE GRAVEL, MEDIUM PLASTICITY, MOIST.	CL	1.0	Hnu=0 ppm α =0 cpm BΓ =60-80 cpm ESP/SPA-3= 11,500 cpm

BOTTOM OF EXCAVATION

NOTES:
THIS EXCAVATION AND SAMPLING AT TRENCH #4, SOUTH END.
TOP 5 INCHES, OVERGROWTH. FILL MATERIAL IS A SILTY SAND WITH GRAVEL (0.5-4.0 IN). NO RUBBLE FOUND IN SOUTH END OF TRENCH. MATERIAL MONITORED AS STOCKPILED, SOIL READINGS BELOW BACKGROUND.
FILL/TILL BOUNDARY 3.75 FT.
SAMPLES 55943, 55944 ARE FOR FULL RAD, ARCHIVE SAMPLES HAVE DIFFERENT NUMBERS.

1126

FERNALD RI/FS

VISUAL CLASSIFICATION OF SOILS

SF

PROJECT NUMBER: 602 3.7	PROJECT NAME: FMPC RI/FS	
BORING NUMBER: 1467	COORDINATES: NORTH 477,658 EAST 1,379,700	DATE: 11/14/89
GROUND ELEVATION: 576.3	GWL: Depth N/A Date/Time N/A	DATE STARTED: 11/14/89
ENGINEER/GEOLOGIST: E TROLLINGER	Depth N/A Date/Time N/A	DATE COMPLETED: 11/14/89
DRILLING METHODS: CAT 225 B LC BACKHOE		PAGE 1 OF 1

DEPTH	SAMPLE	DATE TIME	BLOWS ON	SAMPLE	RECOVERY	INCHES		USCS SYMBOL	TSF	REMARKS
2.5 2.7	55952 55960	11/14/89 0940	N/A		N/A	LOOSE, BROWN (7.5YR 4/2), SILTY SAND, SOME GRAVEL (0.5-2.0 IN), MOIST.		SM	N/A	Hnu=0 ppm α =0 cpm βΓ =40-60 cpm ESP1/SPA-3= 8,200 cpm
3.5 3.7	55953 55961	11/14/89 0950	N/A		N/A	STIFF, YELLOWISH BROWN (10YR 4/4) WITH GRAYISH BROWN (10YR 4/2), SILTY CLAY, TRACE GRAVEL (0.5 IN), LOW PLASTICITY, MOIST.		CL	1.5	Hnu=0 ppm α =0 cpm βΓ =40 cpm ESP/SPA-3= 11,500 cpm

BOTTOM OF EXCAVATION

NOTES:
THIS EXCAVATION AND SAMPLING AT TRENCH #5.
TOP 4 TO 5 INCHES OVERGROWTH GRASS, ROOTLETS, WEEDS. FILL MATERIAL COMPOSED OF SOIL AND SEVERAL PIECES OF CONSTRCUTION RUBBLE, CONCRETE (0.5 FT), ASBESTOS (6 IN LONG), BUILDING SIDING, AND WOOD FRAGMENTS. SURVEY OF FILL MATERIALS PRODUCED READINGS OF BACKGROUND.
FILL/TILL BOUNDARY 2.75 FT.
ARCHIVE SAMPLE NUMBERS 55960, 55961.

1127

FERNALD RI/FS — VISUAL CLASSIFICATION OF SOILS — 5174 SF

PROJECT NUMBER: 602 3.7	PROJECT NAME: FMPC RI/FS	
BORING NUMBER: 1468	COORDINATES: NORTH 477,633 EAST 1,379,700	DATE: 11/14/89
GROUND ELEVATION: 575.7	GWL: Depth N/A Date/Time N/A	DATE STARTED: 11/14/89
ENGINEER/GEOLOGIST: E TROLLINGER	Depth N/A Date/Time N/A	DATE COMPLETED: 11/14/89
DRILLING METHODS: CAT 225 B LC BACKHOE		PAGE 1 OF 1

DEPTH	SAMPLE	BLOWS ON SAMPLE	RECOVERY		USCS SYMBOL	TSF	REMARKS
2.5 2.7	55954 55962 11/14/89 1000	N/A	N/A	LOOSE, BROWN (7.5YR 4/2) TO GRAYISH BROWN (10YR 4/2), SILTY SAND, TRACE GRAVEL (0.5 IN), MOIST.	SM	N/A	Hnu=0.0 ppm α =0 cpm βΓ =40-80 cpm ESP/SPA-3= 8,900 cpm
3.5 3.7	55955 55963 11/14/89 1005	N/A	N/A	STIFF, YELLOWISH BROWN (10YR 4/3), SILTY CLAY, TRACE GRAVEL (0.5-1.0 IN), LOW PLASTICITY, MOIST.	CL	1.0	Hnu=0.0 ppm α =0 cpm βΓ =40-60 cpm ESP/SPA-3= 9,600 cpm
BOTTOM OF EXCAVATION							

NOTES:
THIS EXCAVATION AND SAMPLING AT TRENCH #5.
TOP 4 TO 5 INCHES OVERGROWTH. FILL MATERIAL COMPOSED OF SOIL WITH LESS THAN 1% CONSTRUCTION RUBBLE; CONCRETE (0.5-1.0 FT), TRACE WOOD FRAGMENTS. FILL MATERIAL SURVEYED AS STOCKPILED, READINGS ON SOIL AT BACKGROUND LEVELS.
FILL/TILL BOUNDARY AT 2.75 FT.
ARCHIVE SAMPLE NUMBERS 55962 AND 55963.

1128

FERNALD RI/FS

VISUAL CLASSIFICATION OF SOILS

SF

517

PROJECT NUMBER: 602 3.7	PROJECT NAME: FMPC RI/FS		
BORING NUMBER: 1469	COORDINATES: NORTH 477,608 EAST 1,379,700	DATE:	11/14/89
GROUND ELEVATION: 575.9	GWL: Depth N/A Date/Time N/A	DATE STARTED:	11/14/8
ENGINEER/GEOLOGIST: E TROLLINGER	Depth N/A Date/Time N/A	DATE COMPLETED:	11/14/89
DRILLING METHODS: BACKHOE CAT 225 B LC		PAGE 1	OF 1

DEPTH	SAMPLE	DATE TIME	BLOWS ON SAMPLE	RECOVERY	INCHES		USCS SYMBOL	TSF	REMARKS
2.5 2.7	55956 55964	11/14/89 1040	N/A	N/A	LOOSE, BROWN WITH GRAYISH BROWN (10YR 4/2 WITH 7.5YR 4/2) SILTY SAND, TRACE GRAVEL (0.5-1.0 IN), MOIST.		SM	N/A	Hnu=0.0 ppm α =0 cpm Bγ =60 cpm ESP/SPA-3= 8,900 cpm
3.5 3.7	55957 55965	11/14/89 1045	N/A	N/A	STIFF, YELLOWISH BROWN (10YR 4/4), SILTY CLAY, LOW PLASTICITY, MOIST.		CL	1.0	Hnu=0.0 ppm α =0 cpm Bγ =40-60 cpm ESP/SPA-3= 10,400 cpm
					BOTTOM OF EXCAVATION				

NOTES:
THIS EXCAVATION AND SAMPLING AT TRENCH #5.
TOP 4 TO 5 INCHES OVERGROWTH. FILL MATERIAL COMPOSED OF SOIL WITH LESS THAN 1% RUBBLE ENCOUNTERED; CONCRETE (0.5 FT), WOOD FRAGMENTS. FILL MATERIAL SURVEYED AS STOCKPILED, READINGS AT BACKGROUND.
FILL/TILL BOUNDARY AT 2.75 FT.
ARCHIVE SAMPLE NUMBERS 55964 AND 55965.

FERNALD RI/FS

VISUAL CLASSIFICATION OF SOILS

5174

PROJECT NUMBER: 602 3.7	PROJECT NAME: FMPC RI/FS	
BORING NUMBER: 1470	COORDINATES: NORTH 477,370 EAST 1,379,639	DATE: 11/16/89
GROUND ELEVATION: 568.1	GWL: Depth N/A Date/Time N/A	DATE STARTED: 11/15/89
ENGINEER/GEOLOGIST: E TROLLINGER	Depth N/A Date/Time N/A	DATE COMPLETED: 11/16/89
DRILLING METHODS: CAT 225 B LC TRACKHOE		PAGE 1 OF 1

DEPTH	SAMPLE	DATE TIME	BLOWS ON	SAMPLE	RECOVERY	INCHES		USCS SOIL	SYMBOL	TSF	REMARKS
3.0 3.2	55966 55973	11/16/89 1100	N/A		N/A		LOOSE, BROWN (7.5YR 4/2), SILTY SAND, TRACE GRAVEL (0.5-3.0 IN), MOIST.	SM		N/A	Hnu=0.0-0.2 ppm α =0 cpm βΓ =40-60 cpm ESP/SPA-3= 8,500 cpm
4.2 4.4	55967 55974	11/16/89 1112	N/A		N/A		MEDIUM STIFF, YELLOWISH BROWN (10YR 4/3), SILTY CLAY, TRACE COARSE SAND TO FINE GRAVEL, MOIST, LOW PLASTICITY.	CL		1.0	Hnu=0.2 ppm α =0 cpm βΓ =40 cpm ESP/SPA-3= 9,900 cpm
							BOTTOM OF EXCAVATION				

NOTES:
THIS EXCAVATION AND SAMPLING AT TRENCH #6, SOUTH END.
TOP 3 TO 5 INCHES OVERGROWTH GRASS, ROOTS, WEEDS. FILL MATERIAL IS PREDOMINATELY SOIL WITH LESS THAN 1% RUBBLE WHICH CONSISTED OF SMALL BROKEN PIECES OF CONCRETE SLAB (0.5 FT), SEVERAL PIECES OF ASPHALT (3 TO 4 IN). FILL MATERIAL IS SILTY SAND WITH GRAVEL (0.5-3.0 IN), LOOSE DENSITY. MATERIAL MONITORED DURING STOCKPILING, READINGS WERE BACKGROUND OR LESS.
FILL/TILL BOUNDARY AT 3.5 FT.
ARCHIVE SAMPLE NUMBERS 55973 AND 55974.

1130

5174

FERNALD RI/FS — VISUAL CLASSIFICATION OF SOILS — SF

PROJECT NUMBER: 602 3.7	PROJECT NAME: FMPC RI/FS		
BORING NUMBER: 1471	COORDINATES: NORTH 477,395 EAST 1,379,639	DATE:	11/10/89
GROUND ELEVATION: 570.8	GWL: Depth N/A Date/Time N/A	DATE STARTED:	11/15/8
ENGINEER/GEOLOGIST: E TROLLINGER	Depth N/A Date/Time N/A	DATE COMPLETED:	11/16/89
DRILLING METHODS: CAT 225 B LC TRACKHOE		PAGE 1	OF 1

DEPTH	SAMPLE	DATE/TIME	BLOWS ON SAMPLER	SAMPLE RECOVERY	INCHES		USCS SYMBOL	TSF	REMARKS
4.25 4.4	55968 55975	11/16/89 0837	N/A	N/A		LOOSE, BROWN (7.5YR 4/2 TO 10YR 5/3), SILTY SAND, TRACE GRAVEL (0.5-1.0 IN), MOIST.	SM	N/A	Hnu=0.0 ppm α =0 cpm βΓ =20-40 cpm ESP/SPA-3= 8,300 cpm
5.5 5.7	55969 55976	11/16/89 0845	N/A	N/A		MEDIUM STIFF, GRAYISH BROWN (10YR 5/2), SILTY CLAY, TRACE GRAVEL (0.5-0.75 IN), LOW PLASTICITY, MOIST.	CL	1.0	Hnu=0.0 ppm α =0 cpm βΓ =40 cpm ESP/SPA-3= 11,000 cpm
BOTTOM OF EXCAVATION									

NOTES:
THIS EXCAVATION AND SAMPLING AT TRENCH #6, MIDPOINT.
TOP 3 TO 5 INCHES OVERGROWTH. FILL MATERIAL PREDOMINATELY SOIL WITH LESS THAN 1% OR LESS RUBBLE MATERIAL. TWO SMALL PIECES (0.5-1.0 FT) OF CONCRETE WERE UNCOVERED. FILL MATERIAL MONITORED DURING EXCAVATION, READINGS ON SOIL AND MATERIAL WERE BACKGROUND.
FILL/TILL BOUNDARY AT 5.25 FT.
ARCHIVE SAMPLE NUMBERS 55975 AND 55976.

1131

FERNALD RI/FS — VISUAL CLASSIFICATION OF SOILS

PROJECT NUMBER: 602 3.7	PROJECT NAME: FMPC RI/FS		
BORING NUMBER: 1472	COORDINATES: NORTH 477,420 EAST 1,379,639	DATE:	11/16/89
GROUND ELEVATION: 571.7	GWL: Depth N/A Date/Time N/A	DATE STARTED:	11/15/89
ENGINEER/GEOLOGIST: E TROLLINGER	Depth N/A Date/Time N/A	DATE COMPLETED:	11/16/89
DRILLING METHODS: CAT 225 BACKHOE		PAGE 1 OF 1	

DEPTH	SAMPLE	BLOWS ON SAMPLE	RECOVERY	INCHES	USCS SYMBOL	TSF	REMARKS
4.25 4.4	55970 55977 11/16/89 0900	N/A	N/A	LOOSE, BROWN TO GRAYISH BROWN (10YR 5/2), SILTY SAND, TRACE OF GRAVEL (0.5-1.5 IN), MOIST.	SM	N/A	Hnu=0.0 ppm α =0 cpm βΓ =40 cpm ESP/SPA-3= 9,200 cpm
5.0 5.2	55971 55978 11/16/89 0905	N/A	N/A	MEDIUM DENSE, GRAYISH BROWN (10YR 5/2), SILTY CLAY, TRACE FINE GRAVEL, MEDIUM PLASTICITY, MOIST.	CL	1.0	Hnu=0.0 ppm α =0 cpm βΓ =40 cpm ESP/SPA-3= 11,900 cpm
BOTTOM OF EXCAVATION							

NOTES:
THIS EXCAVATION AND SAMPLING AT TRENCH #6.
TOP 3 TO 5 INCHES OVERGROWTH. FILL MATERIAL IS PREDOMINATELY SOIL WITH 1% OR LESS CONSTRUCTION RUBBLE. ONE PIECE CONCRETE FOUND (0.5 FT). SILTY SAND, TRACE GRAVEL (0.5-3.0 IN), LOOSE DENSITY, MOIST. FILL MATERIAL MONITORED DURING EXCAVATION OF TRENCH, READINGS AT BACKGROUND.
FILL/TILL BOUNDARY AT 4.5 FT.
ARCHIVE SAMPLE NUMBERS 55977 AND 55978.

5174

PROJECT NUMBER: 602 3.7	PROJECT NAME: CRU2 PHASE I FIELD INVESTIGATION	
BORING NUMBER: 1792	COORDINATES: NORTH 477280.15 EAST 1379372.54	DATE:21-AUG-91
GROUND ELEVATION: 566.1	GWL: Depth Date/Time	DATE STARTED: 21-AUG-91
ENGINEER/GEOLOGIST: J. LEAR	Depth Date/Time	DATE COMPLETE: 22-AUG-91
DRILLING METHOD: AUGER		

DEPTH	SAMPLE	DATE TIME	BLOWS ON SAMPLE	RECOVERY INCHES		USCS SYMBOL	TSF	REMARKS
1.5	067342	08/21/91 13:15	4 11 21	14	HARD, DARK YELLOWISH BROWN (10YR, 3/4) SILTY CLAY, TRACE GRAVEL, SOME ORGANICS, LOW PLASTIC, MOIST.	CL	2.5	PID=0 ppm α=60 ppm βΓ=0 cpm
1.5 3.0	067343	08/21/91 13:20	22 23 27	17	V. HARD BROWN (10YR, 5/3) SILTY CLAY SOME LARGE GRAVEL, LOW PLASTICITY, MOIST.	CL	>4.5	PID=0 ppm α=60 ppm βΓ=0 cpm
3.0 4.5	067344	08/21/91 13:25	24 25 27	17	VERY HARD YELLOWISH BROWN (10YR, 5/4) SILTY CLAY, SOME LARGE GRAVEL, LOW PLASTICITY, SLIGHTLY MOIST.	CL	>4.5	PID=0 ppm α=60 ppm βΓ=0 cpm
4.5 6.0	067345	08/21/91 13:30	25 42 27	16	VERY HARD YELLOWISH BROWN (10YR, 5/4) SILTY CLAY, SOME LARGE GRAVEL, LOW PLASTICITY, SLIGHTLY MOIST.	CL	>4.5	PID=0 ppm α=60 ppm βΓ=0 cpm
6.0 7.5	067346	08/21/91 15:00	37 43 39	13	VERY HARD YELLOWISH BROWN (10YR, 5/4) SILTY CLAY, SOME LARGE GRAVEL, LOW PLASTICITY, SLIGHTLY MOIST.	CL	4.5	PID=0 ppm α=60 ppm βΓ=0 cpm
7.5 9.0	067347	08/21/91 15:05	21 24 29	13	VERY HARD, VERY DARK GRAYISH-BROWN (10YR, 3/2) SILTY CLAY, SOME LARGE GRAVEL, LOW PLASTICITY, SLIGHTLY MOIST.	CL	>4.5	PID=0 ppm α=60 ppm βΓ=0 cpm
9.0 10.5	067348	08/21/91 15:10	21 24 19	12	DENSE, YELLOWISH BROWN (10YR, 5/4) CLAYEY SILT, SOME GRAVEL, MOIST, 10.0-HARD, OLIVE GRAVEL (5Y, 3/2) SILTY CLAY, SOME GRAVEL MEDIUM PLASTICITY, MOIST.	ML CL	N/A 2.5	PID=0 ppm α=60 ppm βΓ=0 cpm
10.5 12.0	067349	08/21/91 15:15	9 6 7	4	FIRM OLIVE (5Y, 4/4) CLAY, SOME GRAVEL, MEDIUM PLASTICITY, MOIST.	CL	0.5	PID=0 ppm α=60 ppm βΓ=0 cpm
12.0 13.5	067350	08/21/91 15:30	8 6 7	18	FIRM OLIVE (2.5Y, 4/3) SILTY CLAY, SOME GRAVEL, MEDIUM PLASTICITY, MOIST.	CL	0.5	PID=5-12 ppm α=60 ppm βΓ=0 cpm
13.5 15.0	067351	08/21/91 15:35	8 9 7	18	FIRM OLIVE (2.5Y, 4/3) SILTY CLAY, SOME GRAVEL, MEDIUM PLASTICITY, MOIST.	CL	0.5	PID=1-2 ppm α=60 ppm βΓ=0 cpm
15.0 16.5	067352	08/22/91 08:30	4 5 8	18	FIRM OLIVE (2.5Y, 4/3) SILTY CLAY, SOME GRAVEL, MEDIUM PLASTICITY, MOIST.	CL	0.5	PID=0 ppm α=60 ppm βΓ=0 cpm
16.5 18.0	067353	08/22/91 08:35	8 9 11	18	FIRM OLIVE (2.5Y, 4/3) SILTY CLAY, SOME GRAVEL, MEDIUM PLASTICITY, MOIST, TRACE WOOD CHIPS.	CL	0.5	PID=2 ppm α=80 ppm βΓ=0 cpm
18.0 19.5	067354	08/22/91 08:40	100	4	FIRM OLIVE (5Y, 5/4) SILTY CLAY, SOME GRAVEL, MEDIUM PLASTICITY, MOIST, INPENETRABLE STRUCK, AUGER TO 20.0'	CL	2.0	PID=0 ppm α=80 ppm βΓ=0 cpm

NOTES:

SAA = Same as Above
PID = Photoionization Detector
N/A = Not Applicable

1133

PROJECT NUMBER: 602 3.7	PROJECT NAME: CRU2 PHASE I FIELD INVESTIGATION	
BORING NUMBER: 1792	COORDINATES: NORTH 477280.15 EAST 1379372.54	DATE:21-AUG-91
GROUND ELEVATION: 566.1	GWL: Depth Date/Time	DATE STARTED: 21-AUG-91
ENGINEER/GEOLOGIST: J. LEAR	Depth Date/Time	DATE COMPLETE: 22-AUG-91
DRILLING METHOD: AUGER		

DEPTH	SAMPLE	DATE TIME	BLOWS ON SAMPLE	RECOVERY INCHES		USCS SYMBOL	TSF	REMARKS
20.0 21.5	067355 08/22/91 14:00	8 11 12		12	FIRM, OLIVE (5Y, 5/4) SILTY CLAY, SOME GRAVEL, MEDIUM PLASTICITY, MOIST.	CL	.75	PID=0 ppm α=80 ppm βΓ=0 cpm
21.5 23.0	067356 08/22/91 14:05	17 19 21		18	FIRM OLIVE GRAY (5Y, 4/2) CLAY, TRACE GRAVEL, LOW TO MEDIUM PLASTICITY, MOIST.	CL	1.25	PID=0 ppm α=80 ppm βΓ=0 cpm
23.0 24.5	067357 08/22/91 14:10	27 29 33		12	FIRM OLIVE GRAY (5Y, 4/2) CLAY, TRACE GRAVEL, LOW TO MEDIUM PLASTICITY, MOIST.	CL	1.25	PID=2 ppm α=80 ppm βΓ=0 cpm
24.5 26.0	067358 08/22/91 14:15	36 42 39		0	NO RECOVERY	N/A	N/A	
26.5 28.0	067359 08/22/91 14:20	18 18 22		6	FIRM, LIGHT OLIVE BROWN (2.5Y, 5/4) SILTY CLAY, SOME GRAVEL, TRACE SAND, MOIST.	CL	1.25	PID=0 ppm α=80 ppm βΓ=0 cpm
28.0 29.5	067362 08/22/91 14:30	16 17 17		18	FIRM, LIGHT OLIVE BROWN (2.5Y, 5/4) SILTY CLAY, SOME GRAVEL, TRACE SAND, MOIST, DENSE (10YR, 4/5) BROWN CLAYEY SILT, MOIST.	CL ML	1.25	PID=0 ppm α=80 ppm βΓ=0 cpm
29.5 31.0	067364 08/22/91 14:35	17 19 21		18	FIRM, LIGHT OLIVE BROWN (2.5Y, 5/4) SILTY CLAY, SOME GRAVEL, TRACE SAND, MOIST, DENSE (10YR, 4/5) BROWN CLAYEY SILT, MOIST.	ML	N/A	PID=0 ppm α=80 ppm βΓ=0 cpm
31.0 32.5	067365 08/22/91 16:15	36 35 50		18	FIRM, LIGHT OLIVE BROWN (2.5Y, 5/4) SILTY CLAY, SOME GRAVEL, TRACE SAND, MOIST, DENSE (10YR, 4/5) BROWN CLAYEY SILT, MOIST.	ML	N/A	PID=0 ppm α=80 ppm βΓ=0 cpm
32.5 34.0	067366 08/22/91 16:20	49 37 32		18	FIRM, DARK YELLOWISH BROWN (10YR, 4/6) SILTY CLAY LOW PLASTICITY.	CL	3.5	PID=0 ppm α=80 ppm βΓ=0 cpm

NOTES:

SAA = Same as Above
PID = Photoionization Detector
N/A = Not Applicable

1134

5174 02/02/94 17:03

PROJECT NUMBER: 602 3.7	PROJECT NAME: CRU2 PHASE I FIELD INVESTIGATION	
BORING NUMBER: 1793	COORDINATES: NORTH 477464.98 EAST 1379446.76	DATE:15-AUG-91
GROUND ELEVATION: 572.2	GWL: Depth Date/Time	DATE STARTED: 15-AUG-91
ENGINEER/GEOLOGIST: J. LEAR	Depth Date/Time	DATE COMPLETE: 20-AUG-91
DRILLING METHOD: AUGER		

DEPTH	SAMPLE	DATA TIME	BLOWS ON	SAMPLE	RECOVERY	INCHES		USCS	SYMBOL	TSF	REMARKS
1.5	067331	08/15/91 10:15	4 11 25		16		DENSE, BROWN (10YR, 4/3) CLAYEY SILT, SOME GRAVEL, SOME ORGANICS, SL. MOIST.	ML		N/A	PID=0 ppm α=80 ppm βΓ=0 cpm
1.5 3.0	067332	08/15/91 10:20	17 25 27		18		V. HARD, GRAY TO YELLOWISH BROWN (10YR, 5/1 TO 10YR 4/6) SILTY CLAY, TRACE GRAVEL, TRACE ORGANICS, LOW PLASTICITY, SL MOIST.	CL		>4.5	PID=0 ppm α=80 ppm βΓ=0 cpm
3.0 4.5	067333	08/15/91 10:25	27 27 42		12		V. HARD, BROWN (10YR, 5/3) SILTY CLAY, SOME GRAVEL, TRACE ORGANICS, LOW PLAST, DRY.	CL		>4.5	PID=0 ppm α=80 ppm βΓ=0 cpm
4.5 6.0	067334	08/15/91 10:30	40 37 28		16		V. HARD, V. DARK GRAYISH BROWN (10YR, 3/2) SILTY CLAY, SOME GRAVEL, TRACE ORGANICS, LOW PLASTICITY, SL MOIST.	CL		>4.5	PID=0 ppm α=80 ppm βΓ=0 cpm
6.0 7.5	067335	08/20/91 10:30	90 33 26		17		V. HARD, BROWN TO DARK GRAY (10YR, 5/3 TO 10YR, 4/1) SILTY CLAY, SOME GRAVEL, TRACE ORGANICS, LOW PLAST, DRY TO SL MOIST.	CL		>4.5	PID=0 ppm α=80 ppm βΓ=0 cpm
7.5 9.0	067336	08/20/91 10:35	26 20 23		18		HARD, YELLOWISH BROWN (10YR, 5/6) MOTTLED SILTY CLAY, TRACE SAND, LOW PLAST, MOIST.	CL		3.75	PID=0 ppm α=80 ppm βΓ=0 cpm
9.0 10.5	067337	08/20/91 10:40	21 19 14		18		HARD, YELLOWISH BROWN (10YR, 5/6) MOTTLED SILTY CLAY, TRACE SAND, LOW PLASTICITY, MOIST, TRACE GRAVEL.	CL		3.75	PID=0 ppm α=80 ppm βΓ=0 cpm
10.5 12.0	067338	08/20/91 10:45	14 19 21		12		HARD, YELLOWISH BROWN (10YR, 5/6) MOTTLED SILTY CLAY, TRACE SAND, LOW PLASTICITY, MOIST, TRACE GRAVEL, DENSE, BROWN (10YR, 5/3) SILT, SOME CLAY, MOIST.	CL ML		3.0	PID=0 ppm α=80 ppm βΓ=0 cpm
12.0 13.5	067339	08/20/91 13:15	20 20 22		17		DENSE, BROWN (10YR, 5/3) SILT, SOME CLAY, MOIST, HARD, BROWN (10YR, 5/3) CLAYEY SILT, MOIST.	ML ML		N/A	PID=0 ppm α=80 ppm βΓ=0 cpm
13.5 15.0	067340	08/20/91 13:20	18 21 32		18		HARD, BROWN (10YR, 5/3) CLAYEY SILT, MOIST, HARD, BROWN (10YR, 5/3) SILTY CLAY, TRACE GRAVEL, LOW PLASTICITY, MOIST.	ML CL		N/A 3.0	PID=0 ppm α=80 ppm βΓ=0 cpm

NOTES:

SAA = Same as Above
PID = Photoionization Detector
N/A = Not Applicable

1135

PROJECT NUMBER: 20.03.05	PROJECT NAME: CRU2 RI PHASE II FIELD INVESTIGATION	
BORING NUMBER: 1941	COORDINATES: NORTH 477932.76 EAST 1379691.99	DATE:26-APR-93
GROUND ELEVATION: 578.8	GWL: Depth 2.6 Date/Time 26-Apr-93 13:30	DATE STARTED: 26-APR-93
ENGINEER/GEOLOGIST: DEBES, BOYER	Depth 2.4 Date/Time	DATE COMPLETE: 26-APR-93
DRILLING METHOD: HOLLOW STEM AUGER		

DEPTH	SAMPLE	DATE TIME	BLOWS ON SAMPLE	RECOVERY INCHES		USCS SYMBOL	TSF	REMARKS
.5	112765	04/26/93 09:55	4	6	STIFF, LIGHT OLIVE BROWN (2.5YR,5/4) SILTY CLAY WITH SOME PEBBLES AND ROCK FRAGMENTS, LOW PLASTICITY, DRY	CL	1.25	PID=1.5 ppm BΓ=80 cpm
.5 1.0	112766	04/26/93 09:55	6	6	SAA	CL	1.25	PID=1.5 ppm BΓ=80 cpm
1.0 1.5	112767	04/26/93 09:55	9	2	SAA	CL	1.25	PID=1.5 ppm BΓ=80 cpm
1.5 2.0	112768	04/26/93 10:00	7	6	VERY STIFF, OLIVE BROWN (2.5YR,4/4), SILTY CLAY WITH GRAVEL AND ROOTS, MED PLASTICITY, DRY	CL	2.5	PID=.5 ppm BΓ=60 cpm
2.0 2.5	112769	04/26/93 10:00	11	6	SAA	CL	2.5	PID=.5 ppm BΓ=60 cpm
2.5 3.0	112770	04/26/93 10:00	14	3	SAA	CL	2.5	PID=.5 ppm BΓ=60 cpm
3.0 3.5	112771	04/26/93 10:05	16	6	VERY STIFF, YELLOWISH BROWN (10YR,5/4), SILTY CLAY WITH TRACE OF ORGANICS, MEDIUM PLASTICITY, DRY	CL	3.5	PID=.4 ppm BΓ=60 cpm
3.5 4.0	112772	04/26/93 10:05	23	6	SAA	CL	3.5	PID=.4 ppm BΓ=60 cpm
4.0 4.5	112773	04/26/93 10:05	21	6	SAA	CL	3.5	PID=.4 ppm BΓ=60 cpm
4.5 5.0	112774	04/26/93 10:15	19	6	VERY STIFF, YELLOWISH BROWN (10YR,5/4), SILTY CLAY WITH GRAVEL, MEDIUM PLASTICITY, DRY	CL	2.5	PID=.5 ppm BΓ=60 cpm
5.0 5.5		04/26/93 10:15	14	0	NO RECOVERY	N/A	N/A	
5.5 6.0		04/26/93 10:15	10	0	NO RECOVERY	N/A	N/A	
6.0 6.5	112775	04/26/93 10:22	12	6	VERY STIFF, LIGHT OLIVE BROWN (2.5YR,5/4) SILTY CLAY WITH IRON STAINS, MEDIUM PLASTICITY, SLIGHTLY MOIST	CL	2.5	PID=.5 ppm BΓ=60 cpm

NOTES:

Boring Contractor: PENNSYLVANIA DRILLING
Driller: JOE RAAB, ROGER DAVIS
Drilling Equipment: CME-45

SAA = Same as Above
PID = Photoionization Detector
N/A = Not Applicable

PROJECT NUMBER: 20.03.05	PROJECT NAME: CRU2 RI PHASE II FIELD INVESTIGATION	
BORING NUMBER: 1941	COORDINATES: NORTH 477932.76 EAST 1379691.99	DATE:26-APR-93
GROUND ELEVATION: 578.8	GWL: Depth 2.6 Date/Time 26-Apr-93 13:30	DATE STARTED: 26-APR-93
ENGINEER/GEOLOGIST: DEBES, BOYER	Depth 2.4 Date/Time	DATE COMPLETE: 26-APR-93
DRILLING METHOD: HOLLOW STEM AUGER		

DEPTH	SAMPLE	DATE TIME	BLOWS ON	SAMPLE	RECOVERY	INCHES		USCS SYMBOL	TSF	REMARKS
6.5 7.0		04/26/93 10:22	15		0		NO RECOVERY	N/A	N/A	
7.0 7.5		04/26/93 10:22	18		0		NO RECOVERY	N/A	N/A	
7.5 8.0	112776	04/26/93 10:30	3		6		HARD, YELLOWISH BROWN (10YR,5/6), SILTY CLAY, MEDIUM PLASTICITY, SLIGHTLY MOIST	CL	4.0	PID=.5 ppm BΓ=60 cpm
8.0 8.5	112777	04/26/93 10:30	5		3		SAA	CL	4.0	PID=.5 ppm BΓ=60 cpm
8.5 9.0		04/26/93 10:30	9		0		NO RECOVERY	N/A	N/A	PID=.5 ppm BΓ=60 cpm
9.0 9.5	112778	04/26/93 10:38	4		6		HARD, LIGHT YELLOWISH BROWN (10YR,5/6), SILTY CLAY, MEDIUM PLASTICITY, SLIGHTLY MOIST	CL	4.0	PID=.5 ppm BΓ=60 cpm
9.5 10.0	112779	04/26/93 10:38	6		6		SAA	CL	4.0	PID=.5 ppm BΓ=60 cpm
10.0 10.5	112780	04/26/93 10:38	7		6		HARD, LIGHT YELLOWISH BROWN (10YR,6/4) SILTY CLAY, MEDIUM PLASTICITY, MOIST	CL	4.0	PID=.5 ppm BΓ=60 cpm
10.5 11.0	112781	04/26/93 10:55	14		6		OLIVE BROWN (2.5YR,6/6), CLAYEY SAND, MOIST	SC	N/A	PID=.5 ppm BΓ=60 cpm
11.0 11.5	112781	04/26/93 10:55	19		6		SAA	SC	N/A	PID=.5 ppm BΓ=60 cpm
11.5 12.0		04/26/93 10:55	27		0		NO RECOVERY	N/A	N/A	PID=.5 ppm BΓ=60 cpm
12.0 12.5	112782	04/26/93 11:10	10		6		OLIVE BROWN (2.5YR,6/6), CLAYEY SAND, MOIST	SC	N/A	PID=.5 ppm BΓ=60 cpm
12.5 13.0	112783	04/26/93 11:10	12		6		VERY STIFF, GRAY (2.5YR,6/1) SILTY CLAY, MEDIUM PLASTICITY, SLIGHTLY MOIST	CL	2.5	PID=.5 ppm BΓ=60 cpm

NOTES:

Boring Contractor: PENNSYLVANIA DRILLING
Driller: JOE RAAB, ROGER DAVIS
Drilling Equipment: CME-45

SAA = Same as Above
PID = Photoionization Detector
N/A = Not Applicable

PROJECT NUMBER: 20.03.05	PROJECT NAME: CRU2 RI PHASE II FIELD INVESTIGATION	
BORING NUMBER: 1941	COORDINATES: NORTH 477932.76 EAST 1379691.99	DATE:26-APR-93
GROUND ELEVATION: 578.8	GWL: Depth 2.6 Date/Time 26-Apr-93 13:30	DATE STARTED: 26-APR-93
ENGINEER/GEOLOGIST: DEBES, BOYER	Depth 2.4 Date/Time	DATE COMPLETE: 26-APR-93
DRILLING METHOD: HOLLOW STEM AUGER		

DEPTH	SAMPLE DATE TIME	BLOWS ON SAMPLE	RECOVERY INCHES		USCS SYMBOL	TSF	REMARKS
13.0 13.5	112784 04/26/93 11:10	13	6	SAA	CL	2.5	PID=.5 ppm βΓ=60 cpm

NOTES:

Boring Contractor: PENNSYLVANIA DRILLING
Driller: JOE RAAB, ROGER DAVIS
Drilling Equipment: CME-45

SAA = Same as Above
PID = Photoionization Detector
N/A = Not Applicable

1138

5174

PROJECT NUMBER: 20.03.05	PROJECT NAME: CRU2 RI PHASE II FIELD INVESTIGATION	
BORING NUMBER: 1942	COORDINATES: NORTH 477662.53 EAST 1379627.53	DATE:13-APR-93
GROUND ELEVATION: 576.5	GWL: Depth Date/Time	DATE STARTED: 13-APR-93
ENGINEER/GEOLOGIST: SMITH, D O BRIE	Depth Date/Time	DATE COMPLETE: 16-APR-93
DRILLING METHOD: AUGER		

DEPTH	SAMPLE	DATE TIME	BLOWS ON	SAMPLE	RECOVERY	INCHES		USCS SYMBOL	TSF	REMARKS
.5	110619	04/13/93 09:10	7		5		VERY STIFF, (2.5Y,5/6) LIGHT OLIVE BROWN, CLAY WITH GRAVEL, ORGANICS, CEMENT, NO PLASTICITY, DRY	CL	2.75	PID=0 ppm BΓ=40 cpm
.5 1.0		04/13/93 09:10	9		0		NO RECOVERY	N/A	N/A	
1.0 1.5		04/13/93 09:10	9		0		NO RECOVERY	N/A	N/A	
1.5 2.0	110620	04/13/93 09:20	12		6		HARD, (2.5Y,5/6) LIGHT OLIVE BROWN, GRAVELLY CLAY, NO PLASTICITY, DRY	CL	4.5	PID=0 ppm BΓ=60 cpm
2.0 2.5	110621	04/13/93 09:20	27		6		SAA, VERY STIFF	CL	3.75	PID=0 ppm BΓ=60 cpm
2.5 3.0		04/13/93 09:20	29		0		NO RECOVERY	N/A	N/A	
3.0 3.5	110622	04/13/93 09:28	24		6		HARD, (2.5Y,6/6), OLIVE YELLOW, GRAVELLY CLAY, NO PLASTICITY, DRY	CL	4.0	PID=0 ppm BΓ=60 cpm
3.5 4.0	110623	04/13/93 09:28	30		6		SAA, VERY STIFF	CL	3.75	PID=0 ppm BΓ=60 cpm
4.0 4.5	110624	04/13/93 09:28	28		5		STIFF, (2.5Y,6/6) OLIVE YELLOW, GRAVELLY CLAY, LOW PLASTICITY, SLIGHTLY MOIST	CL	1.25	PID=0 ppm BΓ=60 cpm
4.5 5.0	110625	04/13/93 09:45	4		6		VERY STIFF, (2.5Y,6/6) OLIVE YELLOW, GRAVELLY CLAY WITH CONCRETE, NO PLASTICITY, SLIGHTLY MOIST	CL	3.0	PID=0 ppm BΓ=60 cpm
5.0 5.5		04/13/93 09:45	8		0		NO RECOVERY	N/A	N/A	
5.5 6.0		04/13/93 09:45	6		0		NO RECOVERY	N/A	N/A	
6.0 6.5	110626	04/13/93 13:25	12		6		HARD, (2.5Y,6/4) LIGHT OLIVE BROWN, CLAY, NO PLASTICITY, SLIGHTLY MOIST	CL	4.25	PID=0 ppm BΓ=60 cpm

NOTES:

Driller: KEVIN MYERS, DONNY ARTHUR
Drilling Equipment: ACKER SENTRY

SAA = Same as Above
PID = Photoionization Detector
N/A = Not Applicable

1139

PROJECT NUMBER: 20.03.05	PROJECT NAME: CRU2 RI PHASE II FIELD INVESTIGATION	
BORING NUMBER: ,1942	COORDINATES: NORTH 477662.53 EAST 1379627.53	DATE:13-APR-93
GROUND ELEVATION: 576.5	GWL: Depth Date/Time	DATE STARTED: 13-APR-93
ENGINEER/GEOLOGIST: SMITH, D O BRIE	Depth Date/Time	DATE COMPLETE: 16-APR-93
DRILLING METHOD: AUGER		

DEPTH	SAMPLE	DATE TIME	BLOWS ON SAMPLE	RECOVERY INCHES		USCS SYMBOL	TSF	REMARKS
6.5 7.0	110627 04/13/93 13:25		12	3	SAA	CL	4.0	PID=0 ppm βΓ=60 cpm
7.0 7.5		04/13/93 13:25	18	0	NO RECOVERY	N/A	N/A	
7.5 8.0	110628 04/13/93 13:45		18	2	MEDIUM STIFF, (2.5Y,6/4) LIGHT YELLOWISH BROWN, CLAY, LOW PLASTICITY, WET	CL	.75	PID=0 ppm βΓ=40 cpm
8.0 8.5		04/13/93 13:45	30	0	NO RECOVERY	N/A	N/A	
8.5 9.0		04/13/93 13:45	27	0	NO RECOVERY	N/A	N/A	
9.0 9.5	110629 04/13/93 13:55		8	6	STIFF, (2.5Y,6/4) LIGHT YELLOWISH BROWN MOTTLED WITH GRAY CLAY, LOW PLASTICITY, SLIGHTLY MOIST	CL	1.5	PID=0 ppm βΓ=60 cpm
9.5 10.0	110630 04/13/93 13:55		18	6	SAA, HARD	CL	4.25	PID=0 ppm βΓ=60 cpm
10.0 10.5	110631 04/13/93 13:55		30	6	SAA, VERY STIFF	CL	3.25	PID=0 ppm βΓ=60 cpm
10.5 11.0	110632 04/13/93 14:15		1	6	STIFF, (2.5Y,6/4) LIGHT YELLOWISH BROWN, MOTTLED WITH GRAY CLAY, LOW PLASTICITY, MOIST	CL	1	PID=0 ppm βΓ=60 cpm
11.0 11.5	110633 04/13/93 14:15		1	6	SAA, (2.5Y,5/1) GRAY	CL	1.0	PID=0 ppm βΓ=60 cpm
11.5 12.0	110634 04/13/93 14:15		21	6	SAA BOTTOM 2" GRAY SILT	CL ML	1	PID=0 ppm βΓ=60 cpm
12.0 12.5	110635 04/13/93 14:25		7	6	DENSE, (2.5Y,6/6) OLIVE YELLOW, SILT WITH AN INCH SAND LAYER IN BETWEEN, FINE, WET	SM	N/A	PID=0 ppm βΓ=60 cpm
12.5 13.0	110636 04/13/93 14:25		18	3	SAA	SM	N/A	PID=0 ppm βΓ=60 cpm

NOTES:

Driller: KEVIN MYERS, DONNY ARTHUR
Drilling Equipment: ACKER SENTRY

SAA = Same as Above
PID = Photoionization Detector
N/A = Not Applicable

5174

PROJECT NUMBER: 20.03.05	PROJECT NAME: CRU2 RI PHASE II FIELD INVESTIGATION	
BORING NUMBER: 1942	COORDINATES: NORTH 477662.53 EAST 1379627.53	DATE:13-APR-93
GROUND ELEVATION: 576.5	GWL: Depth Date/Time	DATE STARTED: 13-APR-93
ENGINEER/GEOLOGIST: SMITH, D O BRIE	Depth Date/Time	DATE COMPLETE: 16-APR-93
DRILLING METHOD: AUGER		

DEPTH	SAMPLE	DATE TIME	BLOWS ON SAMPLE	RECOVERY INCHES		USCS SYMBOL	TSF	REMARKS
13.0 13.5		04/13/93 14:25	21	0	NO RECOVERY	N/A	N/A	
13.5 14.0	110637	04/13/93 14:45	5	6	MEDIUM DENSE, (2.5Y,6/6) OLIVE YELLOW, SILT AND SAND MIXTURE, WET	SM	N/A	PID=0 ppm BΓ=60 cpm
14.0 14.5	110638	04/13/93 14:45	8	6	STIFF, (2.5Y,5/1) GRAY CLAY WITH GRAVEL SAND AND SILT, NO PLASTICITY, MOIST	CL	1.25	PID=0 ppm BΓ=60 cpm
14.5 15.0	110639	04/13/93 14:45	8	6	SAA, LESS SAND	CL	1.25	PID=0 ppm BΓ=60 cpm
15.0 15.5	110640	04/13/93 14:55	5	6	VERY STIFF, (2.5Y,5/1) GRAY, GRAVELLY SANDY CLAY, NO PLASTICITY, DRY	CL	3.0	PID=0 ppm BΓ=60 cpm
15.5 16.0	110641	04/13/93 14:55	5	4	SAA	CL	3.0	PID=0 ppm BΓ=60 cpm
16.0 16.5		04/13/93 14:55	14	0	NO RECOVERY	N/A	N/A	
16.5 17.0	110642	04/15/93 08:55	4	6	VERY STIFF, (2.5Y,5/1) GRAY, GRAVELLY CLAY, LOW PLASTICITY, DRY	CL	3.0	PID=0 ppm BΓ=50 cpm
17.0 17.5	110643	04/15/93 08:55	4	6	SAA	CL	3.5	PID=0 ppm BΓ=50 cpm
17.5 18.0	110644	04/15/93 08:55	14	3	SAA	CL	3.5	PID=0 ppm BΓ=50 cpm

NOTES:

Driller: KEVIN MYERS, DONNY ARTHUR
Drilling Equipment: ACKER SENTRY

SAA = Same as Above
PID = Photoionization Detector
N/A = Not Applicable

1141

PROJECT NUMBER: 20.03.05	PROJECT NAME: CRU2 RI PHASE II FIELD INVESTIGATION		
BORING NUMBER: 1954	COORDINATES: NORTH 477864.72 EAST 1379400.07		DATE:14-MAY-93
GROUND ELEVATION: 574.95	GWL: Depth	Date/Time	DATE STARTED: 14-MAY-93
ENGINEER/GEOLOGIST: D.O'BRIEN	Depth	Date/Time	DATE COMPLETE: 15-MAY-93
DRILLING METHOD:			

DEPTH	SAMPLE	DATE TIME	BLOWS ON	SAMPLE	RECOVERY	INCHES		USCS SYMBOL	TSF	REMARKS
10.0 11.5	113103	05/14/93 10:00	5 7 8		15		STIFF, (2.5Y5/1) GRAY GRAVELLY CLAY, LOW PLASTICITY, SLIGHTLY MOIST	CL	1.75	PID=0 ppm BΓ=80 cpm
15.0 16.5		05/14/93 00:00	7 13 23		0		NO RECOVERY	N/A	N/A	

NOTES:

Boring Contractor: PENNSYLVANIA DRILLING
Driller: JEFF BENTLEY,BILL SEBERT
Drilling Equipment: ACKER SENTRY

SAA = Same as Above
PID = Photoionization Detector
N/A = Not Applicable

1142

PROJECT NUMBER: 20.03.05	PROJECT NAME: CRU2 RI PHASE II FIELD INVESTIGATION	
BORING NUMBER: 1964	COORDINATES: NORTH 477418.89 EAST 1379418.28	DATE:17-APR-93
GROUND ELEVATION: 571.6	GWL: Depth Date/Time	DATE STARTED: 17-APR-93
ENGINEER/GEOLOGIST: MUSA KESEKOIV	Depth Date/Time	DATE COMPLETE: 17-APR-93
DRILLING METHOD: HOLLOW STEM AUGER		

DEPTH	SAMPLE	DATE TIME	BLOWS ON SAMPLE	RECOVERY	INCHES		USCS SYMBOL	TSF	REMARKS
.5	112643	04/17/93 09:00	4	6		MEDIUM STIFF, (10YR4/1) DARK GRAY, PEAT WITH HIGH ORGANIC CONTENT, MOIST	PT	1	PID=5.2 ppm BΓ=40 cpm
.5 1.0	112644	04/17/93 09:00	4	6		VERY STIFF, (10YR5/3) BROWN, SILTY CLAY WITH PEBBLES, MEDIUM TO HIGH PLASTICITY, MOIST	CH	2	PID=5.2 ppm BΓ=40 cpm
1.0 1.5		04/17/93 00:00	12	0		NO RECOVERY	N/A	N/A	
1.5 2.0	112645	04/17/93 09:10	8	6		SAA	CH	2	PID=6.2 ppm BΓ=40 cpm
2.0 2.5	112646	04/17/93 09:10	9	6		SAA	CH	2	PID=6.2 ppm BΓ=40 cpm
2.5 3.0		04/17/93 00:00	14	0		NO RECOVERY	N/A	N/A	
3.0 3.5	112647	04/17/93 09:20	8	6		VERY STIFF, (10YR4/2) DARK GRAYISH BROWN, SILTY CLAY WITH SOME PEBBLES, MEDIUM TO HIGH PLASTICITY, MOIST	CH	1.5	PID=4.2 ppm BΓ=40 cpm
3.5 4.0	112647	04/17/93 09:20	9	6		SAA	CH	1.5	PID=4.2 ppm BΓ=40 cpm
4.0 4.5	112647	04/17/93 09:20	12	6		VERY STIFF, (10YR4/1) DARK GRAY, GRAVELLY SILTY CLAY WITH SOME PEBBLES, LOW PLASTICITY, DRY TO MOIST	CL	4	PID=4.2 ppm BΓ=40 cpm
4.5 5.0	112647	04/17/93 09:20	22	6		SAA	CL	4	PID=4.2 ppm BΓ=40 cpm
5.0 5.5	112648	04/17/93 09:30	8	6		VERY STIFF, (10YR4/3) BROWN, SILTY CLAY, MEDIUM TO HIGH PLASTICITY, SOME PEBBLES, MOIST	CH	2	PID=4.2 ppm BΓ=50 cpm
5.5 6.0	112648	04/17/93 09:30	9	6		SAA	CH	3.5	PID=4.2 ppm BΓ=50 cpm
6.0 6.5	112648	04/17/93 09:30	12	6		VERY STIFF, (10YR4/2) DARK GRAYISH BROWN, SILTY CLAY WITH SOME PEBBLES, MEDIUM PLASTICITY, MOIST	CL	4	PID=4.2 ppm BΓ=50 cpm

NOTES:
2 DRUMS FOR SOIL CUTTINGS, 1 DRUM FOR ALCONOK WATER,2 BAGS OF 50 LBS. VOLCLAY, 1/2 BAG OF 94 LBS. CEMENT

Boring Contractor: PENNSYLVANIA DRILLING
Driller: MARTY WATRAL, DONNIE ARTHUR
Drilling Equipment: ACKER

SAA = Same as Above
PID = Photoionization Detector
N/A = Not Applicable

PROJECT NUMBER: 20.03.05	PROJECT NAME: CRU2 RI PHASE II FIELD INVESTIGATION	
BORING NUMBER: 1964	COORDINATES: NORTH 477418.89 EAST 1379418.28	DATE:17-APR-93
GROUND ELEVATION: 571.6	GWL: Depth Date/Time	DATE STARTED: 17-APR-93
ENGINEER/GEOLOGIST: MUSA KESEKOIV	Depth Date/Time	DATE COMPLETE: 17-APR-93
DRILLING METHOD: HOLLOW STEM AUGER		

DEPTH	SAMPLE	DATE TIME	BLOWS ON SAMPLE	RECOVERY INCHES		USCS SYMBOL	TSF	REMARKS
6.5 7.0	112649	04/17/93 09:45	12	6	VERY STIFF, (5YR4/2) OLIVE GRAY, SANDY SILTY CLAY, WITH SOME PEBBLES, LOW TO MEDIUM PLASTICITY, MOIST	CL	2	PID=3.6 ppm BΓ=50 cpm
7.0 7.5	112650	04/17/93 09:45	20	6	SAA	CL	2	PID=3.6 ppm BΓ=50 cpm
7.5 8.0	112651	04/17/93 09:45	28	6	VERY STIFF, (5YR4/2) OLIVE GRAY, SILTY CLAY WITH PEBBLES, MEDIUM TO HIGH PLASTICITY, MOIST(SOME COBBLES)	CH	2	PID=3.6 ppm BΓ=50 cpm
8.0 8.5	112652	04/17/93 10:00	6	8	VERY STIFF, (5YR4/2) OLIVE GRAY, SILTY CLAY WITH COBBLES, MEDIUM TO HIGH PLASTICITY, MOIST	CH	2	PID=3.5 ppm BΓ=40 cpm
8.5 9.0	112653	04/17/93 10:00	6	8	SAA	CH	2	PID=3.5 ppm BΓ=40 cpm
9.0 9.5		04/17/93 10:00	0	9	NO RECOVERY	N/A	N/A	
9.5 10.0		04/17/93 10:00	0	15	NO RECOVERY	N/A	N/A	
10.0 10.5	112654	04/17/93 10:10	6	6	VERY STIFF, (5YR4/2) OLIVE GRAY, SILTY CLAY, FEW PEBBLES, MEDIUM TO HIGH PLASTICITY, MOIST	CH	3	PID=3.5 ppm BΓ=40 cpm
10.5 11.0	112655	04/17/93 10:10	8	6	VERY STIFF, (10YR5/3) BROWN, CLAYEY SILT WITH SOME PEBBLES, LOW PLASTICITY, MOIST	ML	3	PID=3.5 ppm BΓ=40 cpm
11.0 11.5		04/17/93 00:00	6	0	NO RECOVERY	N/A	N/A	
11.5 12.0		04/17/93 00:00	12	0	NO RECOVERY	N/A	N/A	
12.0 12.5	112656	04/17/93 10:20	9	6	VERY STIFF, (10YR5/3) BROWN, SANDY CLAYEY SILT WITH SOME PEBBLES, LOW PLASTICITY, MOIST	OL	3	PID=5.3 ppm BΓ=40 cpm
12.5 13.0	112657	04/17/93 10:20	15	6	VERY STIFF, (10YR5/3) BROWN, CLAYEY SILT, LOW PLASTICITY, MOIST	OL	3.5	PID=5.3 ppm BΓ=40 cpm

NOTES:
2 DRUMS FOR SOIL CUTTINGS, 1 DRUM FOR ALCONOK WATER,2 BAGS OF 50 LBS. VOLCLAY, 1/2 BAG OF 94 LBS. CEMENT

Boring Contractor: PENNSYLVANIA DRILLING
Driller: MARTY WATRAL, DONNIE ARTHUR
Drilling Equipment: ACKER

SAA = Same as Above
PID = Photoionization Detector
N/A = Not Applicable

1144

PROJECT NUMBER: 20.03.05	PROJECT NAME: CRU2 RI PHASE II FIELD INVESTIGATION	
BORING NUMBER: 1964	COORDINATES: NORTH 477418.89 EAST 1379418.28	DATE:17-APR-93
GROUND ELEVATION: 571.6	GWL: Depth Date/Time	DATE STARTED: 17-APR-93
ENGINEER/GEOLOGIST: MUSA KESEKOIV	Depth Date/Time	DATE COMPLETE: 17-APR-93
DRILLING METHOD: HOLLOW STEM AUGER		

DEPTH	SAMPLE DATE TIME	BLOWS ON SAMPLE	RECOVERY INCHES		USCS SYMBOL	TSF	REMARKS
13.0 13.5	112658 04/17/93 10:20	22	6	VERY STIFF, (10YR5/3) BROWN, SILTY CLAY, MEDIUM TO HIGH PLASTICITY, MOIST	CL	3.5	PID=5.3 ppm BΓ=40 cpm
13.5 14.0	04/17/93 00:00	35	0	NO RECOVERY	N/A	N/A	
14.0 14.5	112659 04/17/93 10:45	13	6	DENSE, (10YR5/2) GRAYISH BROWN, SILTY SAND, LOOSE, WITH SOME PEBBLES, MOIST	SM	N/A	PID=3.5 ppm BΓ=40 cpm
14.5 15.0	112660 04/17/93 10:45	13	6	VERY STIFF, (10YR5/3) BROWN, SILTY CLAY, MEDIUM PLASTICITY, MOIST	CL	3	PID=3.5 ppm BΓ=40 cpm
15.0 15.5	112661 04/17/93 10:45	21	6	VERY STIFF, (10YR5/3) BROWN, CLAYEY SILT, LOW PLASTICITY, WET	ML	.5	PID=3.5 ppm BΓ=40 cpm
15.5 16.0	112662 04/17/93 10:45	24	6	SAA	ML	.5	PID=3.5 ppm BΓ=40 cpm
16.0 16.5	112663 04/17/93 10:55	7	6	SAA	ML	.5	PID=3.2 ppm BΓ=40 cpm
16.5 17.0	112664 04/17/93 10:55	10	6	MEDIUM STIFF, (10YR5/3) BROWN, CLAYEY SILT, MEDIUM PLASTICITY, WET TO MOIST	ML	1	PID=3.2 ppm BΓ=40 cpm
17.0 17.5	112665 04/17/93 10:55	21	6	VERY STIFF, (10YR5/3) BROWN, SILTY CLAY, MEDIUM TO HIGH PLASTICITY, MOIST	CH	4	PID=3.2 ppm BΓ=40 cpm
17.5 18.0	112666 04/17/93 10:55	26	6	SAA	CH	4.5	PID=3.2 ppm BΓ=40 cpm
18.0 18.5	112667 04/17/93 13:30	8	6	HARD (10YR, 5/3) BROWN, CLAYEY SILT WITH SOME ANGULAR PEBBLES, MEDIUM PLASTICITY, MOIST	ML	5	PID=0 ppm BΓ=40 cpm
18.5 19.0	112668 04/17/93 13:30	17	6	SAA	ML	N/A	PID=0 ppm BΓ=40 cpm
19.0 19.5	112669 04/17/93 13:30	27	6	SAA	ML	5	PID=0 ppm BΓ=40 cpm

NOTES:
2 DRUMS FOR SOIL CUTTINGS, 1 DRUM FOR ALCONOK WATER,2 BAGS OF 50 LBS. VOLCLAY, 1/2 BAG OF 94 LBS. CEMENT

Boring Contractor: PENNSYLVANIA DRILLING
Driller: MARTY WATRAL, DONNIE ARTHUR
Drilling Equipment: ACKER

SAA = Same as Above
PID = Photoionization Detector
N/A = Not Applicable

1145

PROJECT NUMBER: 20.03.05	PROJECT NAME: CRU2 RI PHASE II FIELD INVESTIGATION	
BORING NUMBER: 1964	COORDINATES: NORTH 477418.89 EAST 1379418.28	DATE:17-APR-93
GROUND ELEVATION: 571.6	GWL: Depth Date/Time	DATE STARTED: 17-APR-93
ENGINEER/GEOLOGIST: MUSA KESEKOIV	Depth Date/Time	DATE COMPLETE: 17-APR-93
DRILLING METHOD: HOLLOW STEM AUGER		

DEPTH	SAMPLE	DATE TIME	BLOWS ON	SAMPLE	RECOVERY	INCHES		USCS	SYMBOL	TSF	REMARKS
19.5 20.0	112670 04/17/93 13:30		28		6		SAA	ML		5	PID=0 ppm BΓ=40 cpm
20.0 20.5	112671 04/17/93 13:50		5		6		VERY HARD, (10YR5/3) BROWN, CLAYEY SILT WITH COBBLES, MEDIUM TO HIGH PLASTICITY, MOIST	CH		4.5	PID=0 ppm BΓ=40 cpm
20.5 21.0	112671 04/17/93 13:50		16		6		DENSE, (10YR5/1) GRAY, LOOS POORLY GRADED GRAVELLY SAND, WITH SOME PEBBLES, MOIST	SP		N/A	PID=0 ppm BΓ=40 cpm
21.0 21.5	112671 04/17/93 13:50		21		6		SAA	SP		N/A	PID=0 ppm BΓ=40 cpm
21.5 22.0	112671 04/17/93 13:50		22		6		SAA	SP		N/A	PID=0 ppm BΓ=40 cpm
22.0 22.5	112672 04/17/93 14:05		35		6		SAA	SP		N/A	PID=0 ppm BΓ=40 cpm
22.5 23.0	112673 04/17/93 14:05		15		6		SAA	SP		N/A	PID=0 ppm BΓ=40 cpm
23.0 23.5	112674 04/17/93 14:05		21		6		SAA	SP		N/A	PID=0 ppm BΓ=40 cpm
23.5 24.0	112674 04/17/93 14:05		33		6		SAA	N/A		N/A	PID=0 ppm BΓ=40 cpm
24.0 24.5	112676 04/17/93 14:05		21		6		SAA	SP		N/A	PID=0 ppm BΓ=40 cpm
24.5 25.0	112677 04/17/93 14:20		31		6		HARD, (10YR5/3) BROWN, SANDY CLAYEY SILT, WITH SOME PEBBLES, LOW PLASTICITY, MOIST	ML		4.5	PID=0 ppm BΓ=40 cpm
25.0 25.5	112678 04/17/93 14:20		30		6		VERY DENSE, (10YR5/1) GRAY, LOOSE POORLY GRADED SAND WITH SOME PEBBLES, MOIST	SP		N/A	PID=0 ppm BΓ=40 cpm
25.5 26.0	04/17/93 14:20		32		0		NO RECOVERY	N/A		N/A	

NOTES:
2 DRUMS FOR SOIL CUTTINGS, 1 DRUM FOR ALCONOK WATER,2 BAGS OF 50 LBS. VOLCLAY, 1/2 BAG OF 94 LBS. CEMENT

Boring Contractor: PENNSYLVANIA DRILLING
Driller: MARTY WATRAL, DONNIE ARTHUR
Drilling Equipment: ACKER

SAA = Same as Above
PID = Photoionization Detector
N/A = Not Applicable

1146

PROJECT NUMBER: 20.03.05	PROJECT NAME: CRU2 RI PHASE II FIELD INVESTIGATION	
BORING NUMBER: 1964	COORDINATES: NORTH 477418.89 EAST 1379418.28	DATE:17-APR-93
GROUND ELEVATION: 571.6	GWL: Depth Date/Time	DATE STARTED: 17-APR-93
ENGINEER/GEOLOGIST: MUSA KESEKOIV	Depth Date/Time	DATE COMPLETE: 17-APR-93
DRILLING METHOD: HOLLOW STEM AUGER		

DEPTH	SAMPLE	DATE TIME	BLOWS ON SAMPLE	RECOVERY INCHES		USCS SYMBOL	TSF	REMARKS
26.0 26.5	112679 04/17/93 14:40	9	6	SAA (25. TO 25.5 FT.)		SP	N/A	PID=0 ppm BΓ=40 cpm
26.5 27.0	112680 04/17/93 14:40	17	6	SAA		SP	N/A	PID=0 ppm BΓ=40 cpm
27.0 27.5	112681 04/17/93 14:40	11	6	SAA		SP	N/A	PID=0 ppm BΓ=40 cpm
27.5 28.0	112682 04/17/93 14:50	21	6	SAA		SP	N/A	PID=0 ppm BΓ=40 cpm
28.0 28.5	112683 04/17/93 14:50	21	6	SAA		SP	N/A	PID=0 ppm BΓ=40 cpm
28.5 29.0	112684 04/17/93 14:50	21	6	SAA		SP	N/A	PID=0 ppm BΓ=40 cpm
29.0 29.5	112685 04/17/93 15:10	20	6	SAA		SP	N/A	PID=0 ppm BΓ=40 cpm
29.5 30.0	112685 04/17/93 15:10	28	6	SAA		SP	N/A	PID=0 ppm BΓ=40 cpm
30.0 30.5	112685 04/17/93 15:10	23	6	SAA		SP	N/A	PID=0 ppm BΓ=40 cpm
30.5 31.0	112686 04/17/93 15:10	28	6	VERY DENSE, (10YR, 5/1) GRAY, LOOSE POORLY GRADED MEDIUM SAND, MOIST		SP	N/A	PID=0 ppm BΓ=40 cpm

NOTES:
2 DRUMS FOR SOIL CUTTINGS, 1 DRUM FOR ALCONOK WATER,2 BAGS OF 50 LBS. VOLCLAY, 1/2 BAG OF 94 LBS. CEMENT

Boring Contractor: PENNSYLVANIA DRILLING
Driller: MARTY WATRAL, DONNIE ARTHUR
Drilling Equipment: ACKER

SAA = Same as Above
PID = Photoionization Detector
N/A = Not Applicable

PROJECT NUMBER: 20.03.05	PROJECT NAME: CRU2 RI PHASE II FIELD INVESTIGATION	
BORING NUMBER: 1965	COORDINATES: NORTH 477347.01 EAST 1379474.61	DATE:21-APR-93
GROUND ELEVATION: 574.1	GWL: Depth Date/Time	DATE STARTED: 20-APR-93
ENGINEER/GEOLOGIST: J BOYER	Depth Date/Time	DATE COMPLETE: 21-APR-93
DRILLING METHOD: HOLLOW STEM AUGER		

DEPTH	SAMPLE	DATE TIME	BLOWS ON SAMPLE	RECOVERY	INCHES		USCS SYMBOL	TSF	REMARKS
.5	112735	04/20/93 09:20	4	6		MEDIUM DENSE, (2.5Y 5/6) LIGHT OLIVE BROWN, CLAYEY SILT, LOW PLASTICITY, ORGANIC, MATERIAL	ML	N/A	PID=0.6 ppm BΓ=60 cpm
.5 1.0	112735	04/20/93 09:20	N/A 4	6		SAA	N/A ML	N/A	PID=0.6 ppm BΓ=60 cpm
1.0 1.5	112735	04/20/93 09:20	N/A 5	6		MEDIUM DENSE, (2.5Y 6/6) OLIVE YELLOW, SILTY SAND, MOIST-WET	N/A SM	N/A	PID=0.6 ppm BΓ=60 cpm
1.5 2.0	112735	04/20/93 09:20	N/A 8	5		SAA	N/A	N/A	PID=0.6 ppm BΓ=60 cpm
2.0 4.0	112736	04/20/93 09:30	N/A	18		SHELBY TUBE	N/A	N/A	
4.0 4.5	112737	04/20/93 10:10	12	6		VERY DENSE, (2.5Y 5/6) LIGHT OLIVE BROWN, CLAYEY SILT WITH GRAVEL, SLIGHTY PLASTICITY, DRY	ML CL	N/A	PID=0.3 ppm BΓ=60 cpm
4.5 5.0	112737	04/20/93 10:10	11	6		SAA	ML CL	N/A	PID=0.3 ppm BΓ=60 cpm
5.0 5.5	112737	04/20/93 10:10	31	6		SAA	ML CL	N/A	PID=0.3 ppm BΓ=60 cpm
5.5 6.0	112737	04/20/93 10:10	24	2		SAA	ML CL	N/A	PID=0.3 ppm BΓ=60 cpm
6.0 6.5	112738	04/20/93 10:35	8	6		MEDIUM DENSE, (5Y 4/4) OLIVE, CLAYEY SILT WITH SAND AND GRAVEL, LOW MEDIUM PLASTICITY, MOIST	ML	N/A	PID=0.4 ppm BΓ=60 cpm
6.5 7.0	112739	04/20/93 10:35	12	6		SAA	ML	N/A	PID=0.4 ppm BΓ=60 cpm
7.0 7.5		04/20/93 10:35	15	0		NO RECOVERY	N/A	N/A	
7.5 8.0	112740	04/20/93 10:50	5	6		MEDIUM DENSE, (5GY 5/1) GREENISH GRAY, CLAYEY SILT, TRACE SAND AND GRAVEL, MOIST	ML	N/A	PID=0.8 ppm BΓ=80 cpm

NOTES:

Driller: JOE RAAB, RODGE R DAVIS
Drilling Equipment: CME-45

SAA = Same as Above
PID = Photoionization Detector
N/A = Not Applicable

1148

PROJECT NUMBER: 20.03.05	PROJECT NAME: CRU2 RI PHASE II FIELD INVESTIGATION	
BORING NUMBER: 1965	COORDINATES: NORTH 477347.01 EAST 1379474.61	DATE:21-APR-93
GROUND ELEVATION: 574.1	GWL: Depth Date/Time	DATE STARTED: 20-APR-93
ENGINEER/GEOLOGIST: J BOYER	Depth Date/Time	DATE COMPLETE: 21-APR-93

DRILLING METHOD: HOLLOW STEM AUGER

DEPTH	SAMPLE	DATE TIME	BLOWS ON	SAMPLE	RECOVERY	INCHES		USCS SYMBOL	TSF	REMARKS
8.0 9.0		04/20/93 00:00	4 8		0			N/A	N/A	PID=0.8 ppm BΓ=80 cpm
9.0 9.5	112741	04/20/93 11:00	3		6		MEDIUM STIFF, (5Y,5/4) OLIVE SILTY CLAY, WITH GRAVEL AND SAND, MOIST-WET, BLACK CLAY MODULES	CL	1.0	PID=0.9 ppm BΓ=60 cpm
9.5 10.0	112742	04/20/93 11:00	3		4		SAA	CL	0.5	PID=0.9 ppm BΓ=60 cpm
10.0 10.5		04/20/93 00:00	4		0			N/A	N/A	PID=0.9 ppm BΓ=60 cpm
10.5 11.0	112743	04/20/93 13:00	6		6		MEDIUM STIFF, (56Y,4/1) DARK GREENISH GRAY, SILTY CLAY, TRACE GRAVEL MEDIUM TO HIGH PLASTICITY, BLACK CLAY NOPOLES , MOIST	CL	.75	PID=0.6 ppm BΓ=120 cpm
11.0 11.5	112744	04/20/93 13:00	7		6		SAA	CL	.75	PID=0.6 ppm BΓ=120 cpm
11.5 12.0		04/20/93 13:00	8		0			N/A	N/A	PID=0.6 ppm BΓ=120 cpm
12.0 12.5	112745	04/20/93 13:10	6		6		MEDIUM STIFF, (5Y,5/2) OLIVE GRAY, SILTY CLAY, TRACE GRAVEL, MEDIUM PLASTICITY, MOIST	CL	.5	PID=0 ppm BΓ=60 cpm
12.5 13.0	112746	04/20/93 13:10	8		6		SAA	CL	.75	PID=0 ppm BΓ=60 cpm
13.0 13.5	112747	04/20/93 13:10	8		6		MEDIUM STIFF, (5Y,3/2) DARK OLIVE GRAY, SILTY CLAY, MEDIUM PLASTICITY, MOIST	CL	.5	PID=0 ppm BΓ=60 cpm
13.5 14.0	112748	04/20/93 13:20	5		6		SAA	CL	.5	PID=0 ppm BΓ=60 cpm
14.0 14.5	112749	04/20/93 13:20	7		6		SAA	CL	.7	PID=0 ppm BΓ=60 cpm
14.5 15.0	112750	04/20/93 13:20	8		2		SAA	CL	.5	PID=0 ppm BΓ=60 cpm

NOTES:

Driller: JOE RAAB, RODGE R DAVIS
Drilling Equipment: CME-45

SAA = Same as Above
PID = Photoionization Detector
N/A = Not Applicable

PROJECT NUMBER: 20.03.05	PROJECT NAME: CRU2 RI PHASE II FIELD INVESTIGATION	
BORING NUMBER: 1965	COORDINATES: NORTH 477347.01 EAST 1379474.61	DATE:21-APR-93
GROUND ELEVATION: 574.1	GWL: Depth Date/Time	DATE STARTED: 20-APR-93
ENGINEER/GEOLOGIST: J BOYER	Depth Date/Time	DATE COMPLETE: 21-APR-93
DRILLING METHOD: HOLLOW STEM AUGER		

DEPTH	SAMPLE	DATE TIME	BLOWS ON	SAMPLE	RECOVERY	INCHES		USCS	SYMBOL	TSF	REMARKS
15.0 15.5	112951	04/20/93 13:30	2		6		VERY SOFT, (5Y,3/2) DARK OLIVE GRAY, SILTY CLAY, TRACE GRAVEL, MEDIUM PLASTIC, MOIST	CL		.25	PID=0 ppm BΓ=60 cpm
15.5 16.0	112752	04/20/93 13:30	3		6		SAA	CL		.25	PID=0 ppm BΓ=60 cpm
16.0 16.5		04/20/93 00:00	3		0			N/A		N/A	PID=0 ppm BΓ=60 cpm
16.5 17.0	112753	04/20/93 13:50	6		6		VERY SOFT, (5Y,3/2) DARK OLIVE GRAY, SILTY CLAY, TRACE GRAVEL, MEDIUM PLASTICITY, MOIST	CL		.25	PID=0 ppm BΓ=60 cpm
17.0 17.5		04/20/93 00:00	50		0		SPLIT SPOON REFUSAL, HIT	N/A		N/A	PID=0 ppm BΓ=60 cpm
17.5 18.0		04/20/93 00:00	N/A		0		DOLOMITE, COBBLE (APPEARS TO BE CONCRETE) CEMENTED GRAVEL	N/A		N/A	PID=0 ppm BΓ=60 cpm
18.0 18.5	112754	04/20/93 14:30	12		6		VERY SOFT, (5Y,4/4) OLIVE, SILTY CLAY, MEDIUM PLASTICITY, MOIST, ALSO CONCRETE, WOOD CHIPS, AND TILE FRAGMENT	CL		0.25	PID=1.2 ppm BΓ=60 cpm
18.5 19.0		04/20/93 00:00	12		0		NO RECOVERY	N/A		N/A	
19.0 19.5		04/20/93 00:00	12		0		NO RECOVERY	N/A		N/A	
19.5 20.0	112755	04/20/93 14:40	6		6		STIFF, (2.5Y,5/4) LIGHT OLIVE BROWN, SILTY CLAY, TRACE GRAVEL, LOW PLASTICITY, DRY	CL		1.5	PID=1.0 ppm BΓ=75 cpm
20.0 20.5	112756	04/20/93 14:40	7		6		SAA	CL		1.75	PID=1.0 ppm BΓ=75 cpm
20.5 21.0		04/20/93 00:00	10		0		NO RECOVERY	N/A		N/A	
21.0 21.5	112758	04/20/93 09:30	7		6		VERY SOFT, (5Y,4/3) OLIVE, SILTY CLAY, TRACE GRAVEL, SLIGHT PLASTICITY, MOIST	CL		.25	PID=1.7 ppm BΓ=60 cpm

NOTES:

Driller: JOE RAAB, RODGE R DAVIS
Drilling Equipment: CME-45

SAA = Same as Above
PID = Photoionization Detector
N/A = Not Applicable

5174

PROJECT NUMBER: 20.03.05	PROJECT NAME: CRU2 RI PHASE II FIELD INVESTIGATION	
BORING NUMBER: 1965	COORDINATES: NORTH 477347.01 EAST 1379474.61	DATE:21-APR-93
GROUND ELEVATION: 574.1	GWL: Depth Date/Time	DATE STARTED: 20-APR-93
ENGINEER/GEOLOGIST: J BOYER	Depth Date/Time	DATE COMPLETE: 21-APR-93
DRILLING METHOD: HOLLOW STEM AUGER		

DEPTH	SAMPLE	DATE TIME	BLOWS ON SAMPLE	RECOVERY INCHES		USCS SYMBOL	TSF	REMARKS
21.5 22.0	112759 04/20/93 09:30		9	6	STIFF, (10YR,4/6) DARK YELLOWISH BROWN, SILTY CLAY, TRACE GRAVEL, LOW PLASTICITY, MOIST	CL	2.5	PID=1.7 ppm BΓ=60 cpm
22.0 22.5	112760 04/20/93 09:30		21	6	SAA	CL	2.0	PID=1.7 ppm BΓ=60 cpm
22.5 23.0	112761 04/20/93 10:00		4	6	STIFF, (10YR,4/6) DARK YELLOWISH BROWN, SILTY CLAY, WITH GRAVEL, SLIGHT PLASTICITY, DRY	CL	1.5	PID=2 ppm BΓ=60 cpm
23.0 23.5	112761 04/20/93 10:00		7	6	DENSE, (10YR,5/4) YELLOWISH BROWN, CLAYEY SILT WITH GRAVEL, NO TO SLIGHT PLASTICITY, DRY	ML	N/A	PID=2 ppm BΓ=60 cpm
23.5 24.0	112761 04/20/93 10:00		16	6	SAA	ML	N/A	PID=2 ppm BΓ=60 cpm
24.0 24.5	112761 04/20/93 10:00		32	6	SAA	ML	N/A	PID=2 ppm BΓ=60 cpm
24.5 26.5	112762 04/20/93 10:20		N/A	N/A	SHELBY TUBE	N/A	N/A	
26.5 27.0	112763 04/20/93 11:00		7	6	DENSE, (10YR,5/6) YELLOWISH BROWN, POORLY GRADED SAND, WITH GRAVEL, DRY	SP	N/A	PID=0 ppm BΓ=40 cpm
27.0 27.5	112763 04/20/93 11:00		10	6	SAA	N/A SP	N/A	PID=0 ppm BΓ=40 cpm
27.5 28.0	112763 04/20/93 11:00		12	6	SAA	N/A SP	N/A	PID=0 ppm BΓ=40 cpm
28.0 28.5	112764 04/20/93 11:00		23	6	SAA	SP	N/A	PID=0 ppm BΓ=40 cpm

NOTES:

Driller: JOE RAAB, RODGE R DAVIS
Drilling Equipment: CME-45

SAA = Same as Above
PID = Photoionization Detector
N/A = Not Applicable

PROJECT NUMBER: 20.03.05	PROJECT NAME: CRU2 RI PHASE II FIELD INVESTIGATION	
BORING NUMBER: 1966	COORDINATES: NORTH 477240.00 EAST 1379500.34	DATE:22-APR-93
GROUND ELEVATION: 558	GWL: Depth Date/Time	DATE STARTED: 21-APR-93
ENGINEER/GEOLOGIST: J REAGAN	Depth Date/Time	DATE COMPLETE: 22-APR-93
DRILLING METHOD: HOLLOW STEM AUGER		

DEPTH	SAMPLE DATE TIME	BLOWS ON SAMPLE	RECOVERY INCHES		USCS SYMBOL	TSF	REMARKS
.5	112854 04/21/93 09:50	2	6	SOFT, (2.5Y 3/1) VERY DARK GRAY,SILTY FINE SAND, LOW PLASTICITY, MOIST	ML	.5	PID=16.1 ppm βΓ=300 cpm
.5 1.0	04/21/93 09:50	5	6	SAA SAMPLE TAKEN BY IH PERSONNEL	ML	.5	PID=16.1 ppm βΓ=60 cpm
1.0 1.5	112855 04/21/93 09:50	8	2	STIFF (2.5Y 5/4) LIGHT OLIVE BROWN, (2.5Y 3/1) VERY DARK GRAY, MOTTLES, SILTY CLAY, SLIGHTLY PLASTIC, MOIST	CL	1	PID=16.1 ppm βΓ=200 cpm
1.5 2.0	112856 04/21/93 10:00	6	6	VERY STIFF (2.5Y 5/4) LIGHT OLIVE BROWN, (2.5Y 3/1) VERY DARK GRAY MOTTLES, SILTY CLAY, SLIGHTLY PLASTIC, MOIST	CL	2.5	PID=1 ppm βΓ=60 cpm
2.0 2.5	112857 04/21/93 10:00	12	6	STIFF (2.5Y 5/4) LIGHT OLIVE BROWN, (2.5Y 3/1) VERY DARK GRAY MOTTLES, SILTY CLAY, SLIGHTLY PLASTIC, MOIST	CL	1.75	PID=1 ppm βΓ=60 cpm
2.5 3.0	112858 04/21/93 10:35	4	6	SAA	CL	2	PID=1 ppm βΓ=60 cpm
3.0 3.5	112858 04/21/93 10:35	6	6	SAA	CL	2.0	PID=0 ppm βΓ=60 cpm
3.5 4.0	112858 04/21/93 10:35	8	6	SAA	CL	2	PID=0 ppm βΓ=60 cpm
4.0 4.5	112858 04/21/93 10:35	8	6	SAA	CL	2	PID=0 ppm βΓ=60 cpm
4.5 5.0	112859 04/21/93 10:50	4	6	STIFF (2.5Y 5/4) LIGHT OLIVE BROWN, SILTY CLAY, SLIGHTLY PLASTIC, MOIST	CL	1.25	PID=0 ppm βΓ=50 cpm
5.0 5.5	112859 04/21/93 10:50	4	6	SAA	CL	1	PID=0 ppm βΓ=50 cpm
5.5 6.0	112859 04/21/93 10:50	5	6	MEDIUM STIFF, SAA	CL	0.5	PID=0 ppm βΓ=50 cpm
6.0 6.5	112859 04/21/93 10:50	5	6	SAA	CL	1.5	PID=0 ppm βΓ=50 cpm

NOTES:
BACKGROUND: HNU = 0.5 PPM BETA GAMMA 60 CPM

Boring Contractor: PENNSYLVANIA DRILLING
Driller: MARTY WATRAL, BOB DEILEY
Drilling Equipment: ACKER SOIL SENTRY

SAA = Same as Above
PID = Photoionization Detector
N/A = Not Applicable

1152

02/02/94 17:03

5174

PROJECT NUMBER: 20.03.05	PROJECT NAME: CRU2 RI PHASE II FIELD INVESTIGATION	
BORING NUMBER: 1966	COORDINATES: NORTH 477240.00 EAST 1379500.34	DATE:22-APR-93
GROUND ELEVATION: 558	GWL: Depth Date/Time	DATE STARTED: 21-APR-93
ENGINEER/GEOLOGIST: J REAGAN	Depth Date/Time	DATE COMPLETE: 22-APR-93
DRILLING METHOD: HOLLOW STEM AUGER		

DEPTH	SAMPLE	DATE TIME	BLOWS ON SAMPLE	RECOVERY INCHES		USCS SYMBOL	TSF	REMARKS
6.5 8.5	112860	04/21/93 13:30	N/A	N/A	SHELBY TUBE	N/A	N/A	
8.5 9.0	112861	04/21/93 13:45	2	6	STIFF (2.5Y 4/3) OLIVE BROWN, SILTY CLAY, LOW PLASTICITY, MOIST	CL	1.25	
9.0 9.5	112862	04/21/93 13:45	2	6	STIFF (2.5Y 4/2) DARK GRAYISH BROWN, SILTY CLAY, LOW PLASTICITY, MOIST	CL	1.0	PID=0 ppm BΓ=50 cpm
9.5 10.0	112863	04/21/93 13:45	4	4	SAA	CL	1.25	PID=0 ppm BΓ=50 cpm
10.0 10.5	112864	04/21/93 14:00	3	6	STIFF(2.5Y 4/2) DARK GRAYISH BROWN, (2.5Y 5/1) GRAY MOTTLES, SILTY CLAY, LOW PLASTICITY, MOIST, GRAVELS	CL	1.0	PID=0 ppm BΓ=50 cpm
10.5 11.0	112865	04/21/93 14:00	3	6	SAA	CL	1.0	PID=0 ppm BΓ=50 cpm
11.0 11.5	112866	04/21/93 14:00	3	6	SAA	CL	1.0	PID=0 ppm BΓ=50 cpm
11.5 12.0	112867	04/21/93 14:05	7	6	STIFF, (2.5Y 4/4) OLIVE BROWN, SILTY CLAY, LOW PLASTICITY, MOIST	CL	1.25	PID=0 ppm BΓ=50 cpm
12.0 12.5	112867	04/21/93 14:05	8	6	STIFF, (2.5Y 4/4) OLIVE BROWN, (2.5Y 5/6) LIGHT OLIVE BROWN MOTTLES, SILTY CLAY, SLIGHTLY PLASTIC, GRAVELS	CL	1.25	
12.5 13.0	112867	04/21/93 14:05	10	6	SAA	CL	1.5	
13.0 15.0	112868	04/21/93 14:30	N/A	N/A	SHELBY TUBE	N/A	N/A	
15.0 15.5	112869	04/21/93 14:50	3	6	STIFF, (2.5Y 4/4) OLIVE BROWN, SILTY CLAY, LOW PLASTICITY, MOIST GRAVELS	CL	1.0	PID=1.8 ppm BΓ=60 cpm
15.5 16.0	112870	04/21/93 14:50	5	6	SAA	CL	2.0	PID=1.8 ppm BΓ=60 cpm

NOTES:
BACKGROUND: HNU = 0.5 PPM BETA GAMMA 60 CPM

Boring Contractor: PENNSYLVANIA DRILLING
Driller: MARTY WATRAL, BOB DEILEY
Drilling Equipment: ACKER SOIL SENTRY

SAA = Same as Above
PID = Photoionization Detector
N/A = Not Applicable

1153

PROJECT NUMBER: 20.03.05	PROJECT NAME: CRU2 RI PHASE II FIELD INVESTIGATION	
BORING NUMBER: 1966	COORDINATES: NORTH 477240.00 EAST 1379500.34	DATE:22-APR-93
GROUND ELEVATION: 558	GWL: Depth Date/Time	DATE STARTED: 21-APR-93
ENGINEER/GEOLOGIST: J REAGAN	Depth Date/Time	DATE COMPLETE: 22-APR-93
DRILLING METHOD: HOLLOW STEM AUGER		

DEPTH	SAMPLE	DATE TIME	BLOWS ON SAMPLE	RECOVERY INCHES		USCS SYMBOL	TSF	REMARKS
16.0 16.5	112871 04/21/93 14:50		12	6	STIFF, (5GY 4/1) DARK GREENISH GRAY, SILTY CLAY, LOW PLASTICITY, MOIST, GRAVELS	CL	1.5	PID=1.8 ppm βΓ=60 cpm
16.5 17.0	112872 04/21/93 15:00		3	6	SAA	CL	1.5	PID=1.7 ppm βΓ=50 cpm
17.0 17.5	112873 04/21/93 15:00		10	6	SAA	CL	1.5	PID=1.7 ppm βΓ=50 cpm
17.5 18.0	04/21/93 15:00		14	0	NO RECOVERY	N/A	N/A	
18.0 18.5	04/21/93 15:00		20	0	NO RECOVERY	N/A	N/A	
18.5 19.0	04/21/93 15:00		25	0	NO RECOVERY	N/A	N/A	
19.0 19.5	04/21/93 15:00		25	0	NO RECOVERY	N/A	N/A	
19.5 20.0	112874 04/21/93 15:40		12	6	VERY STIFF, (10YR 3/1) VERY DARK GRAY, SILTY CLAY, LOW PLASTICITY, MOIST	CL	3.0	PID=0 ppm βΓ=50 cpm
20.0 20.5	112875 04/21/93 15:40		20	6	VERY STIFF, (2.5Y 4/4) OLIVE BROWN, SILTY CLAY, LOW PLASTICITY, MOIST	CL	4.0	PID=0 ppm βΓ=50 cpm
20.5 21.0	112876 04/21/93 15:40		24	6	SAA	CL	4.5	PID=0 ppm βΓ=50 cpm
21.0 21.5	112878 04/22/93 09:20		6	6	STIFF, (2.5Y 4/4) OLIVE BROWN, SILTY CLAY, LOW PLASTICITY, MOIST	CL	1.5	PID=0 ppm βΓ=50 cpm
21.5 22.0	112879 04/22/93 09:20		6	6	VERY STIFF, (2.5Y 4/4) OLIVE BROWN, SILTY CLAY, SLIGHTLY PLASTIC, MOIST	CL	2.5	PID=0 ppm βΓ=50 cpm
22.0 22.5	04/22/93 09:20		12	0	NO RECOVERY	N/A	N/A	

NOTES:
BACKGROUND: HNU = 0.5 PPM BETA GAMMA 60 CPM

Boring Contractor: PENNSYLVANIA DRILLING
Driller: MARTY WATRAL, BOB DEILEY
Drilling Equipment: ACKER SOIL SENTRY

SAA = Same as Above
PID = Photoionization Detector
N/A = Not Applicable

1154

PROJECT NUMBER: 20.03.05	PROJECT NAME: CRU2 RI PHASE II FIELD INVESTIGATION	
BORING NUMBER: 1966	COORDINATES: NORTH 477240.00 EAST 1379500.34	DATE:22-APR-93
GROUND ELEVATION: 558	GWL: Depth Date/Time	DATE STARTED: 21-APR-93
ENGINEER/GEOLOGIST: J REAGAN	Depth Date/Time	DATE COMPLETE: 22-APR-93
DRILLING METHOD: HOLLOW STEM AUGER		

DEPTH	SAMPLE	DATE TIME	BLOWS ON SAMPLE	RECOVERY	INCHES		USCS SYMBOL	TSF	REMARKS
22.5 23.0	112880	04/22/93 09:40	8	6		VERY STIFF, (2.5Y 3/2) VERY DARK GRAYISH BROWN, SILTY CLAY, SLIGHTLY PLASTIC, MOIST	CL	3.5	PID=0 ppm BΓ=50 cpm
23.0 23.5	112881	04/22/93 09:40	8	6		STIFF, (10YR 4/3) BROWN, SILTY CLAY, LOW PLASTICITY, MOIST, SOME SAND	CL	1.5	PID=0 ppm BΓ=50 cpm
23.5 24.0	112882	04/22/93 09:40	12	6		SAA	CL	1.5	PID=0 ppm BΓ=50 cpm
24.0 24.5	112883	04/22/93 09:55	8	6		SAA	CL	1.5	PID=0 ppm BΓ=50 cpm
24.5 25.0	112883	04/22/93 09:55	10	6		SAA	CL	1.5	PID=0 ppm BΓ=50 cpm
25.0 25.5	112884	04/22/93 09:55	17	6		MEDIUM DENSE, (10YR 4/3) BROWN, SAND-SILT-GRAVEL MIXTURE, LOW PLASTICITY, MOIST	GM	N/A	PID=0 ppm BΓ=50 cpm

NOTES:
BACKGROUND: HNU = 0.5 PPM BETA GAMMA 60 CPM

Boring Contractor: PENNSYLVANIA DRILLING
Driller: MARTY WATRAL, BOB DEILEY
Drilling Equipment: ACKER SOIL SENTRY

SAA = Same as Above
PID = Photoionization Detector
N/A = Not Applicable

1155

PROJECT NUMBER: 20.03.05	PROJECT NAME: CRU2 RI PHASE II FIELD INVESTIGATION	
BORING NUMBER: 1967	COORDINATES: NORTH 477293.90 EAST 1379393.85	DATE:18-APR-93
GROUND ELEVATION: 568.2	GWL: Depth Date/Time	DATE STARTED: 18-APR-93
ENGINEER/GEOLOGIST: J BOYER	Depth Date/Time	DATE COMPLETE: 19-APR-93
DRILLING METHOD: HOLLOW STEM AUGER		

DEPTH	SAMPLE	DATE TIME	BLOWS ON SAMPLE	RECOVERY INCHES		USCS SYMBOL	TSF	REMARKS
.5	112638 04/18/93 13:10	9	6	MEDIUM DENSE, (2.5Y5/4) LIGHT OLIVE BROWN, CLAYEY SILT, SLIGHT MOIST, LOW PLASTICITY		ML	N/A	PID=0 ppm BΓ=75 cpm
.5 1.0	112639 04/18/93 13:10	7	6	SAA		ML	N/A	PID=0 ppm BΓ=75 cpm
1.0 1.5	112640 04/18/93 13:10	10	6	SAA		ML	N/A	PID=0 ppm BΓ=75 cpm
1.5 2.0	112641 04/18/93 13:20	11	6	MEDIUM DENSE, (2.5Y4/4) OLIVE BROWN, CLAYEY SILT WITH GRAVEL, SLIGHT PLASTICITY, SLIGHTLY MOIST		ML	N/A	PID=0 ppm BΓ=75 cpm
2.0 2.5	112642 04/18/93 13:20	10	6	SAA		ML	N/A	PID=0 ppm BΓ=60 cpm
2.5 3.0	112693 04/18/93 13:20	17	6	SAA		ML	N/A	PID=0 ppm BΓ=60 cpm
3.0 3.5	112694 04/18/93 13:35	4	6	MEDIUM DENSE, (2.5Y4/4) OLIVE BROWN, CLAYEY SILT TRACE GRAVEL, SLIGHT PLASTICITY, SLIGHT MOIST		ML	N/A	PID=0.2 ppm BΓ=75 cpm
3.5 4.0	112695 04/18/93 13:35	12	6	SAA		ML	N/A	PID=0 ppm BΓ=75 cpm
4.0 4.5	04/18/93 00:00	15	0	NO RECOVERY		N/A	N/A	
4.5 5.0	112696 04/18/93 13:45	4	6	VERY STIFF, (2.5Y5/4) LIGHT OLIVE BROWN, SILTY CLAY, TRACE GRAVEL, LOW PLASTICITY, SLIGHT MOIST		CL	2.5	PID=1.2 ppm BΓ=100 cpm
5.0 5.5	112696 04/18/93 13:45	14	6	STIFF, (2.5Y5/4) LIGHT OLIVE BROWN, SILTY CLAY, TRACE GRAVEL, LOW PLASTICITY, SLIGHTLY MOIST		CL	1.5	PID=1.2 ppm BΓ=100 cpm
5.5 6.0	04/18/93 00:00	17	4	PUSH ROCK LOW RECOVERY		N/A	N/A	PID=1.2 ppm BΓ=100 cpm
6.0 6.5	04/18/93 00:00	28	0	NO RECOVERY		N/A	N/A	

NOTES:

Driller: JOE RAAB, RODGER DAVIS
Drilling Equipment: CME-45

SAA = Same as Above
PID = Photoionization Detector
N/A = Not Applicable

1156

02/24/94 17:03

PROJECT NUMBER: 20.03.05	PROJECT NAME: CRU2 RI PHASE II FIELD INVESTIGATION	
BORING NUMBER: 1967	COORDINATES: NORTH 477293.90 EAST 1379393.85	DATE:18-APR-93
GROUND ELEVATION: 568.2	GWL: Depth Date/Time	DATE STARTED: 18-APR-93
ENGINEER/GEOLOGIST: J BOYER	Depth Date/Time	DATE COMPLETE: 19-APR-93
DRILLING METHOD: HOLLOW STEM AUGER		

DEPTH	SAMPLE	DATE TIME	BLOWS ON SAMPLE	RECOVERY INCHES		USCS SYMBOL	TSF	REMARKS
6.5 7.0	112696 04/18/93 13:45	7		6	VERY DENSE, (2.5Y5/4) LIGHT OLIVE BROWN, CLAYEY SILT WITH GRAVEL, LOW PLASTICITY, SLIGHTLY MOIST	ML	N/A	PID=1.1 ppm BΓ=75 cpm
7.0 7.5	112696 04/18/93 13:45	18		6	SAA	ML	N/A	PID=1.1 ppm BΓ=75 cpm
7.5 8.0	112697 04/18/93 13:50	27		6	VERY DENSE, (2.5Y5/4) LIGHT OLIVE BROWN, CLAYEY SILT WITH GRAVEL, LOW PLASTICITY, SLIGHT MOIST	ML	N/A	PID=1.1 ppm BΓ=75 cpm
8.0 8.5	112698 04/18/93 13:50	24		4	SAA	N/A	N/A	PID=1.1 ppm BΓ=75 cpm
8.5 9.0	112699 04/18/93 14:05	4		6	MEDIUM DENSE, (2.5Y5/4) LIGHT OLIVE BROWN, CLAYEY SILT, TRACE GRAVEL, LOW PLASTICITY, SLIGHTLY MOIST	ML	N/A	PID=1.2 ppm BΓ=70 cpm
9.0 9.5	112700 04/18/93 14:05	5		6	SAA	ML	N/A	PID=1.2 ppm BΓ=70 cpm
9.5 10.0	04/18/93 00:00	6		0	NO RECOVERY	N/A	N/A	
10.0 10.5	112701 04/18/93 14:25	3		6	SAA	ML	N/A	PID=2.5 ppm BΓ=80-90 cpm
10.5 11.0	112702 04/18/93 14:25	7		6	MEDIUM DENSE, (5Y5/3) OLIVE, CLAYEY SILT, TRACE GRAVEL AND ORGANICS, LOW PLASTICITY, SLIGHTLY MOIST	ML	N/A	PID=2.5 ppm BΓ=80-90 cpm
11.0 11.5	112703 04/18/93 14:25	9		4	SAA	ML	N/A	PID=2.5 ppm BΓ=80-90 cpm
11.5 13.0	04/18/93 00:00	10 10 15		N/A	NO RECOVERY	N/A	N/A	
13.0 13.5	112704 04/18/93 14:45	7		6	MEDIUM DENSE, (5Y4/4) OLIVE, CLAYEY SILT, SLIGHT PLASTICITY, SLIGHTLY MOIST	ML	N/A	PID=3 ppm BΓ=75 cpm
13.5 14.5	04/18/93 00:00	16 21		0	NO RECOVERY	N/A	N/A	

NOTES:

Driller: JOE RAAB, RODGER DAVIS
Drilling Equipment: CME-45

SAA = Same as Above
PID = Photoionization Detector
N/A = Not Applicable

1157

PROJECT NUMBER: 20.03.05	PROJECT NAME: CRU2 RI PHASE II FIELD INVESTIGATION	
BORING NUMBER: 1967	COORDINATES: NORTH 477293.90 EAST 1379393.85	DATE:18-APR-93
GROUND ELEVATION: 568.2	GWL: Depth Date/Time	DATE STARTED: 18-APR-93
ENGINEER/GEOLOGIST: J BOYER.	Depth Date/Time	DATE COMPLETE: 19-APR-93
DRILLING METHOD: HOLLOW STEM AUGER		

DEPTH	SAMPLE	DATE TIME	BLOWS ON	SAMPLE	RECOVERY	INCHES		USCS SYMBOL	TSF	REMARKS
14.5 15.0	112705 04/18/93 15:10		3		6		MEDIUM DENSE, (5Y5/3) OLIVE, CLAYEY SILT, LOW PLASTICITY, MOIST	ML	N/A	PID=3.2 ppm BΓ=50 cpm
15.0 15.5	112706 04/18/93 15:10		6		6		MEDIUM DENSE, (5Y,5/3) OLIVE, CLAYEY SILT, TRACE ORGANICS, LOW PLASTICITY, MOIST	ML	N/A	PID=3.2 ppm BΓ=50 cpm
15.5 16.0	112707 04/18/93 15:10		9		3		SAA	ML	N/A	PID=3.2 ppm BΓ=50 cpm
16.0 16.5	112708 04/18/93 15:20		9		6		DENSE, (5Y5/3) OLIVE, CLAYEY SILT, TRACE ORGANICS, TRACE GRAVEL, LOW PLASTICITY, MOIST	ML	N/A	PID=3.5 ppm BΓ=100 cpm
16.5 17.0	112709 04/18/93 15:20		14		6		SAA	ML	N/A	PID=3.5 ppm BΓ=100 cpm
17.0 17.5	112710 04/18/93 15:20		17		4		DENSE, (5Y5/3) OLIVE, CLAYEY SILT, TRACE ORGANICS, LOW TO MEDIUM PLASTICITY, MOIST, ORGANIC ORDER	ML	N/A	PID=3.5 ppm BΓ=100 cpm
17.5 18.0	112711 04/18/93 08:45		4		6		SOFT, (5Y4/4) OLIVE, SILTY CLAYEY SAND ,TRACE GRAVEL, MEDIUM PLASTIC, MOIST ORGANIC ORDER	CL	.5	PID=1.5 ppm BΓ=60 cpm
18.0 19.0	04/18/93 00:00		5 8		0		NO RECOVERY PUSHED ROCK	N/A	N/A	
19.0 19.5	112712 04/18/93 09:00		8		6		SOFT, (5Y4/4) OLIVE, SILTY CLAY WITH SAND, TRACE GRAVEL, MEDIUM PLASTICITY, MOIST, ORGANIC ODOR	CL	N/A	PID=.9 ppm BΓ=60 cpm
19.5 20.0	112713 04/18/93 09:00		4		6		SOFT, (5Y4/4) OLIVE, SILTY CLAY WITH GRAVEL, TRACE SAND, MEDIUM PLASTICITY, MOIST	CL	.25	PID=.9 ppm BΓ=60 cpm
20.0 20.5	04/18/93 00:00		7		0		NO RECOVERY	N/A	N/A	
20.5 21.0	112714 04/18/93 09:10		7		6		SOFT, (5Y4/4) OLIVE, SILTY CLAY WITH SAND AND GRAVEL, MEDIUM TO HIGH PLASTICITY, MOIST	CL	.5	PID=1.5 ppm BΓ=60 cpm
21.0 21.5	112715 04/18/93 09:10		13		6		SAA	CL	.5	PID=1.5 ppm BΓ=60 cpm

NOTES:

Driller: JOE RAAB, RODGER DAVIS
Drilling Equipment: CME-45

SAA = Same as Above
PID = Photoionization Detector
N/A = Not Applicable

1158

5174

PROJECT NUMBER: 20.03.05	PROJECT NAME: CRU2 RI PHASE II FIELD INVESTIGATION	
BORING NUMBER: 1967	COORDINATES: NORTH 477293.90 EAST 1379393.85	DATE:18-APR-93
GROUND ELEVATION: 568:2	GWL: Depth Date/Time	DATE STARTED: 18-APR-93
ENGINEER/GEOLOGIST: J BOYER	Depth Date/Time	DATE COMPLETE: 19-APR-93
DRILLING METHOD: HOLLOW STEM AUGER		

DEPTH	SAMPLE	DATE TIME	BLOWS ON SAMPLE	RECOVERY INCHES		USCS SYMBOL	TSF	REMARKS
21.5 22.0		04/18/93 00:00	15	0	NO RECOVERY	N/A	N/A	
22.0 22.5	112716	04/18/93 09:25	9	6	SOFT, (5Y4/4) OLIVE, SILTY CLAY WITH GRAVEL, MEDIUM PLASTICITY, MOIST	CL	.5	PID=1 ppm BΓ=65 cpm
22.5 23.0	112717	04/18/93 09:25	13	6	MEDIUM STIFF, (5Y4/4) OLIVE, SILTY CLAY WITH GRAVEL, LOW PLASTICITY, MOIST, ORGANIC ODOR	CL	.75	PID=1 ppm BΓ=65 cpm
23.0 23.5	112718	04/18/93 09:25	17	4	SAA	CL	.75	PID=1 ppm BΓ=65 cpm
23.5 24.0	112719	04/18/93 09:45	5	6	MEDIUM STIFF, (5Y4/4) OLIVE, SILTY CLAY, TRACE GRAVEL AND ORGANICS, MOIST	CL	1	PID=.6 ppm BΓ=75 cpm
24.0 24.5	112720	04/18/93 09:45	8	6	SAA	CL	1	PID=.6 ppm BΓ=75 cpm
24.5 25.0	112721	04/18/93 09:45	10	6	SAA	CL	1	PID=.6 ppm BΓ=75 cpm
25.0 25.5	112722	04/18/93 10:55	9	6	STIFF, (5Y4/4) OLIVE, SILTY CLAY, TRACE GRAVEL AND ORGANICS, MOIST	CL	1.5	PID=1 ppm BΓ=60 cpm
25.5 26.0	112723	04/18/93 10:55	4	6	SAA	CL	2	PID=1 ppm BΓ=60 cpm
26.0 26.5	112724	04/18/93 10:55	6	5	SAA	CL	N/A	PID=1 ppm BΓ=60 cpm
26.5 27.0	112725	04/18/93 11:10	11	6	STIFF, (5Y5/4) OLIVE, SILTY CLAY, LOW PLASTICITY, TRACE GRAVEL, MOIST	CL	2	PID=0 ppm BΓ=60 cpm
27.0 27.5	112726	04/18/93 11:10	11	6	SAA	CL	1.5	PID=0 ppm BΓ=60 cpm
27.5 28.0	112727	04/18/93 11:10	16	6	SAA	CL	1	PID=0 ppm BΓ=60 cpm

NOTES:

Driller: JOE RAAB, RODGER DAVIS
Drilling Equipment: CME-45

SAA = Same as Above
PID = Photoionization Detector
N/A = Not Applicable

1159

PROJECT NUMBER: 20.03.05	PROJECT NAME: CRU2 RI PHASE II FIELD INVESTIGATION	
BORING NUMBER: 1967	COORDINATES: NORTH 477293.90 EAST 1379393.85	DATE:18-APR-93
GROUND ELEVATION: 568.2	GWL: Depth Date/Time	DATE STARTED: 18-APR-93
ENGINEER/GEOLOGIST: J BOYER	Depth Date/Time	DATE COMPLETE: 19-APR-93
DRILLING METHOD: HOLLOW STEM AUGER		

DEPTH	SAMPLE	DATE TIME	BLOWS ON	SAMPLE	RECOVERY	INCHES		USCS SYMBOL	TSF	REMARKS
28.0 28.5	112728	04/18/93 13:15	2		6		STIFF, (2.5Y5/4) LIGHT OLIVE BROWN, SILTY CLAY WITH SAND, TRACE GRAVEL, MOIST	CL	1	PID=1 ppm βΓ=60 cpm
28.5 29.0	112729	04/18/93 13:15	6		6		SAA	CL	1	PID=1 ppm βΓ=60 cpm
29.0 29.5	112730	04/18/93 13:15	9		4		SAA	CL	2	PID=1 ppm βΓ=60 cpm
29.5 30.0	112731	04/18/93 13:30	8		6		DENSE, (10YR4/6) DARK YELLOWISH BROWN, SILT, TRACE COARSE SAND, DRY	ML	N/A	PID=1.2 ppm βΓ=60 cpm
30.0 30.5	112731	04/18/93 13:30	10		6		DENSE, (10YR 4/6) DARK YELLOWISH BROWN, SILT, TRACE COARSE SAND, DRY	ML	N/A	PID=1.2 ppm βΓ=60 cpm
30.5 31.0	112731	04/18/93 13:30	15		6		SAA	ML	N/A	PID=1.2 ppm βΓ=60 cpm
31.0 31.5	112732	04/18/93 13:30	21		6		SAA	ML	N/A	PID=1.2 ppm βΓ=60 cpm

NOTES:

Driller: JOE RAAB, RODGER DAVIS
Drilling Equipment: CME-45

SAA = Same as Above
PID = Photoionization Detector
N/A = Not Applicable

1160

PROJECT NUMBER: 20.03.05	PROJECT NAME: CRU2 RI PHASE II FIELD INVESTIGATION	
BORING NUMBER: 1968	COORDINATES: NORTH 477364.98 EAST 1379590.55	DATE:19-APR-93
GROUND ELEVATION: 569	GWL: Depth Date/Time	DATE STARTED: 19-APR-93
ENGINEER/GEOLOGIST: J REAGAN	Depth Date/Time	DATE COMPLETE: 20-APR-93
DRILLING METHOD: HOLLOW STEM AUGER		

DEPTH	SAMPLE	DATE TIME	BLOWS ON SAMPLE	RECOVERY INCHES		USCS SYMBOL	TSF	REMARKS
1.0		04/19/93 00:00	50	0	NO RECOVERY	N/A	N/A	
3.0	112833	04/19/93 08:20	N/A	N/A	SHELBY TUBE SAMPLE	N/A	N/A	
3.5	112834	04/19/93 08:35	13	6	(2.5Y,2.5/1) BLACK, COAL PIECES	N/A	N/A	PID=0 ppm BΓ=60 cpm
4.0	112834	04/19/93 08:35	17	6	STIFF, (2.5Y, 5/4) LIGHT OLIVE BROWN, CLAYEY SILTY FINE SANDY, LOW PLASTICITY, DRY	ML	1.5	PID=0 ppm BΓ=60 cpm
4.5	112834	04/19/93 08:35	18	6	STIFF, (2.5Y, 4/1) DARK GRAY, SILTY CLAYEY FINE SAND, LOW PLASTICITY, DRY	ML	1.5	PID=0 ppm BΓ=60 cpm
5.0	112835	04/19/93 08:50	6	6	STIFF (2.5Y, 4/4) OLIVE BROWN, SILTY CLAY, LOW PLASTICITY, MOIST	CL	1.5	PID=0 ppm BΓ=60 cpm
5.5	112835	04/19/93 08:50	12	6	VERY STIFF, (2.5Y, 4/2) DARK GRAYISH BROWN, SILTY CLAY, SLIGHTLY PLASTIC, MOIST	CL	2.5	PID=0 ppm BΓ=60 cpm
6.0	112835	04/19/93 08:50	12	6	SAA	CL	2.5	PID=0 ppm BΓ=60 cpm
6.5	112835	04/19/93 08:50	10	6	SAA	CL	2.25	PID=0 ppm BΓ=60 cpm
7.0	112836	04/19/93 09:05	10	6	SAA	CL	2	PID=0 ppm BΓ=60 cpm
7.5	112837	04/19/93 09:05	7	6	SAA	CL	2	PID=0 ppm BΓ=60 cpm
8.0	112838	04/19/93 09:05	8	6	VERY STIFF, (2.5Y, 4/2), DARK GRAYISH BROWN, SILTY CLAY, SLIGHTLY PLASTIC, MOIST	CL	2.5	PID=0 ppm BΓ=60 cpm
8.5	112839	04/19/93 09:15	4	6	STIFF, (2.5Y, 4/1) DARK GRAY, SILTY CLAY, LOW PLASTICITY, MOIST	CL	1.5	PID=0 ppm BΓ=60 cpm

NOTES:

Driller: MARTY WATRAL, DOC DETLEY
Drilling Equipment: ACKER SOIL SENTRY

SAA = Same as Above
PID = Photoionization Detector
N/A = Not Applicable

1161

PROJECT NUMBER: 20.03.05	PROJECT NAME: CRU2 RI PHASE II FIELD INVESTIGATION	
BORING NUMBER: 1968	COORDINATES: NORTH 477364.98 EAST 1379590.55	DATE:19-APR-93
GROUND ELEVATION: 569	GWL: Depth Date/Time	DATE STARTED: 19-APR-93
ENGINEER/GEOLOGIST: J REAGAN	Depth Date/Time	DATE COMPLETE: 20-APR-93
DRILLING METHOD: HOLLOW STEM AUGER		

DEPTH	SAMPLE	DATE TIME	BLOWS ON SAMPLE	RECOVERY INCHES		USCS SYMBOL	TSF	REMARKS
8.5 9.0		04/19/93 09:15	4	0	NO RECOVERY	N/A	N/A	
9.0 9.5		04/19/93 09:15	5	0	NO RECOVERY	N/A	N/A	
9.5 10.0	112840	04/19/93 09:20	3	6	STIFF, (2.5Y 4/1) DARK GRAY, SILTY CLAY, LOW PLASTLICITY, MOIST	CL	2	PID=0 ppm BΓ=80 cpm
10.0 10.5	112841	04/19/93 09:20	3	6	STIFF, (2.5Y, 4/1) DARK GRAY, (2.5Y, 3/1) VERY DARK GRAY, MOTTLES, SILTY CLAY, SLIGHTLY PLASTIC, MOIST	CL	1.25	PID=0 ppm BΓ=80 cpm
10.5 11.0		04/19/93 09:25	4	0	NO RECOVERY	N/A	N/A	
11.0 11.5	112842	04/19/93 09:30	15	6	STIFF, (2.5Y, 4/1) DARK GRAY, (2.5Y, 3/1) VERY DARK GRAY, MOTTLES, SILTY CLAY, SLIGHTLY PLASTIC, WET	CL	1.0	PID=0 ppm BΓ=40 cpm
11.5 12.0	112843	04/19/93 09:30	17	6	VERY STIFF, (2.5Y, 4/2) DARK GRAYISH BROWN, (2.5Y, 3/1) VERY DARK GRAYISH BROWN, MOTTLES, SILTY CLAY, SLIGHTLY PLASTIC, MOIST	CL	3.0	PID=0 ppm BΓ=40 cpm
12.0 12.5	112844	04/19/93 09:30	23	6	VERY STIFF, (2.5Y, 4/2) DARK GRAYISH BROWN, SILTY CLAY, SLIGHTLY PLASTIC, MOIST	CL	2.5	PID=0 ppm BΓ=60 cpm
12.5 13.0	112845	04/19/93 09:45	7	6	SAA	CL	2.5	PID=0 ppm BΓ=60 cpm
13.0 13.5	112846	04/19/93 09:45	10	6	SAA	CL	2.75	PID=0 ppm BΓ=60 cpm
13.5 14.0		04/19/93 00:00	12	0	NO RECOVERY	N/A	N/A	PID=0 ppm BΓ=60 cpm
14.0 14.5	112847	04/19/93 10:05	5	6	VERY STIFF, (2.5Y, 5/4) LIGHT OLIVE BROWN, SILTY CLAY, LOW PLASTICITY, MOIST	CL	2.5	PID=0 ppm BΓ=60 cpm
14.5 15.0	112848	04/19/93 10:05	12	6	SAA	CL	2.5	PID=0 ppm BΓ=60 cpm

NOTES:

Driller: MARTY WATRAL, DOC DETLEY
Drilling Equipment: ACKER SOIL SENTRY

SAA = Same as Above
PID = Photoionization Detector
N/A = Not Applicable

1162

PROJECT NUMBER: 20.03.05	PROJECT NAME: CRU2 RI PHASE II FIELD INVESTIGATION	
BORING NUMBER: 1968	COORDINATES: NORTH 477364.98 EAST 1379590.55	DATE:19-APR-93
GROUND ELEVATION: 569	GWL: Depth Date/Time	DATE STARTED: 19-APR-93
ENGINEER/GEOLOGIST: J REAGAN	Depth Date/Time	DATE COMPLETE: 20-APR-93
DRILLING METHOD: HOLLOW STEM AUGER		

DEPTH	SAMPLE	DATE TIME	BLOWS ON	SAMPLE	RECOVERY	INCHES		USCS SYMBOL	TSF	REMARKS
15.0 15.5		04/19/93 00:00	20		0		NO RECOVERY	N/A	N/A	PID=0 ppm BΓ=60 cpm
15.5 16.0	112849	04/19/93 10:30	10		6		STIFF, (2.5Y, 5/4) LIGHT OLIVE BROWN, SILTY CLAY, DRY, LOW PLASTICITY	CL	2	PID=0 ppm BΓ=60 cpm
16.0 16.5	112849	04/19/93 10:30	24		6		SAA	CL	2	PID=0 ppm BΓ=60 cpm
16.5 17.0	112850	04/19/93 10:30	50		4		SAA	CL	3	PID=0 ppm BΓ=50 cpm
17.0 17.5	112851	04/19/93 13:30	10		6		LOOSE, (2.5Y, 4/3) OLIVE BROWN, POORLY GRADED SAND, MOIST	SP	N/A	PID=0 ppm BΓ=50 cpm
17.5 18.0	112852	04/19/93 13:30	10		4		SAA	N/A	N/A	PID=0 ppm BΓ=50 cpm
18.0 18.5		04/19/93 00:00	11		0		NO RECOVERY	N/A	N/A	

NOTES:

Driller: MARTY WATRAL, DOC DETLEY
Drilling Equipment: ACKER SOIL SENTRY

SAA = Same as Above
PID = Photoionization Detector
N/A = Not Applicable

1163

PROJECT NUMBER: 20.03.05	PROJECT NAME: CRU2 RI PHASE II FIELD INVESTIGATION	
BORING NUMBER: 1969	COORDINATES: NORTH 477633.01 EAST 1379700.05	DATE:15-APR-93
GROUND ELEVATION: 575.5	GWL: Depth Date/Time	DATE STARTED: 15-APR-93
ENGINEER/GEOLOGIST: MUSA M KESEBIR	Depth Date/Time	DATE COMPLETE: 15-APR-93
DRILLING METHOD: HOLLOW STEM AUGER		

DEPTH	SAMPLE	DATE TIME	BLOWS ON SAMPLE	RECOVERY INCHES		USCS SYMBOL	TSF	REMARKS
.5	112554	04/15/93 08:50	1	6	STIFF, (10YR 5/3) BROWN, SILTY CLAY WITH PLANT ROOTS, HIGH PLASTICITY, MOIST	OL	1	PID=0 ppm BΓ=80 cpm
.5 1.0	112555	04/15/93 08:50	4	6	SAA	OL	1.5	PID=0 ppm BΓ=80 cpm
1.0 1.5	112556	04/15/93 08:50	3	6	SAA	OL	1.5	PID=0 ppm BΓ=1.5 cpm
1.5 2.0		04/15/93 00:00	3	0	NO RECOVERY	N/A	N/A	
2.0 2.5	112557	04/15/93 09:10	3	6	STIFF, (10YR 5/2) GRAYISH BROWN, SILTY CLAY WITH DECOMPOSED ROOTS, MEDIUM TO HIGH PLASTICITY, MOIST	OH	2	PID=0 ppm BΓ=40 cpm
2.5 3.0	112557	04/15/93 09:10	5	6	SAA	OH	2	PID=0 ppm BΓ=40 cpm
3.0 3.5	112557	04/15/93 09:10	10	6	SAA	OH	2	PID=0 ppm BΓ=40 cpm
3.5 4.0	112557	04/15/93 09:10	13	6	SAA	OH	2	PID=0 ppm BΓ=40 cpm
4.0 4.5	112558	04/15/93 09:35	15	6	STIFF, (10YR 5/2) GRAYISH BROWN, SILTY CLAY WITH LAMINATION, MEDIUM TO HIGH PLASTICITY, MOIST	OH	1.5	PID=2 ppm BΓ=60 cpm
4.5 5.0	112559	04/15/93 09:35	15	6	SAA	OH	2	PID=2 ppm BΓ=60 cpm
5.0 5.5	112559	04/15/93 09:35	15	6	SAA	OH	2	PID=2 ppm BΓ=60 cpm
5.5 6.0	112559	04/15/93 09:35	15	6	SAA	OH	2	PID=2 ppm BΓ=60 cpm
6.0 6.5	112560	04/15/93 10:00	5	6	VERY STIFF, (10YR 5/2) GRAYISH BROWN, LAMINATED CLAY, MEDIUM TO HIGH PLASTICITY, MOIST	CL	3	PID=1.5 ppm BΓ=60 cpm

NOTES:
2 X 50 LBS VOLCLAY & 1/2 X 94 LBS CEMENT WERE USED TO GROUT.

Boring Contractor: PENNSYLVANIA DRILLING
Driller: MARTY WATRAL
Drilling Equipment: ACKER

SAA = Same as Above
PID = Photoionization Detector
N/A = Not Applicable

PROJECT NUMBER: 20.03.05	PROJECT NAME: CRU2 RI PHASE II FIELD INVESTIGATION	
BORING NUMBER: 1969	COORDINATES: NORTH 477633.01 EAST 1379700.05	DATE:15-APR-93
GROUND ELEVATION: 575.5	GWL: Depth Date/Time	DATE STARTED: 15-APR-93
ENGINEER/GEOLOGIST: MUSA M KESEBIR	Depth Date/Time	DATE COMPLETE: 15-APR-93
DRILLING METHOD: HOLLOW STEM AUGER		

DEPTH	SAMPLE DATE TIME	BLOWS ON SAMPLE	RECOVERY INCHES		USCS SYMBOL	TSF	REMARKS
6.5 7.0	112561 04/15/93 10:00	14	6	SAA	CL	3	PID=1.5 ppm BΓ=60 cpm
7.0 7.5	112562 04/15/93 10:10	9	6	SAA	CL	3	PID=2 ppm BΓ=60 cpm
7.5 8.0	112562 04/15/93 10:10	20	6	SAA	CL	3	PID=2 ppm BΓ=60 cpm
8.0 8.5	112562 04/15/93 10:10	25	6	SAA	CL	3	PID=2 ppm BΓ=60 cpm
8.5 9.0	112562 04/15/93 10:10	30	6	SAA	CL	3	PID=2 ppm BΓ=60 cpm
9.0 9.5	112563 04/15/93 10:20	5	6	VERY STIFF, (10YR 5/2) GRAYISH BROWN, CLAY WITH 2" (10YR, 5/1) GRAY CLAY, HIGH PLASTICITY, MOIST	CL	3	PID=1 ppm BΓ=100 cpm
9.5 10.0	112563 04/15/93 10:20	9	6	SAA	CL	3	PID=1 ppm BΓ=100 cpm
10.0 10.5	112563 04/15/93 10:20	15	6	MEDIUM STIFF, (10YR 5/3) BROWN, CLAYEY SILT, LOW PLASTICITY, MOIST TO WET	OL	1	PID=1 ppm BΓ=100 cpm
10.5 11.0	112564 04/15/93 10:45	5	6	MEDIUM DENSE, (10YR 5/3) BROWN, FINE SAND, WET, LOOSE	SM	N/A	PID=1 ppm BΓ=60 cpm
11.0 11.5	112564 04/15/93 10:45	7	6	STIFF, (10YR 5/3) BROWN, CLAYEY SILT, LOW PLASTICITY, MOIST	OL	1.5	PID=1 ppm BΓ=60 cpm
11.5 12.0	112564 04/15/93 10:45	14	6	MEDIUM DENSE, (10YR 5/1) GRAY, FINE SAND, MOIST TO WET, LOOSE	SM	N/A	PID=1 ppm BΓ=60 cpm
12.0 13.5	112565 04/15/93 11:05	N/A	N/A	SHELBY NOT DESCRIBED	N/A	N/A	PID=1 ppm BΓ=60 cpm
13.5 14.0	112566 04/15/93 11:15	6	5	VERY STIFF, (10YR 5/1) GRAY FINE SANDY SILT, MEDIUM DENSE, MOIST	MH	3	PID=1 ppm BΓ=60 cpm

NOTES:
2 X 50 LBS VOLCLAY & 1/2 X 94 LBS CEMENT WERE USED TO GROUT.

Boring Contractor: PENNSYLVANIA DRILLING
Driller: MARTY WATRAL
Drilling Equipment: ACKER

SAA = Same as Above
PID = Photoionization Detector
N/A = Not Applicable

1165

PROJECT NUMBER: 20.03.05	PROJECT NAME: CRU2 RI PHASE II FIELD INVESTIGATION	
BORING NUMBER: 1970	COORDINATES: NORTH 477613.30 EAST 1379444.79	DATE:18-APR-93
GROUND ELEVATION: 571	GWL: Depth Date/Time	DATE STARTED: 18-APR-93
ENGINEER/GEOLOGIST: MUSA KESIBIR	Depth Date/Time	DATE COMPLETE: 18-APR-93
DRILLING METHOD: HOLLOW STEM AUGER (HSA)		

DEPTH	SAMPLE DATE TIME	BLOWS ON SAMPLE	RECOVERY INCHES		USCS SYMBOL	TSF	REMARKS
.5	112688 04/18/93 09:20	N/A	6	SHELBY	N/A	N/A	βΓ=40 cpm
.5 1.0	112688 04/18/93 09:20	N/A	6	SHELBY	N/A	N/A	βΓ=40 cpm
1.0 1.5	112688 04/18/93 09:20	N/A	3	SHELBY	N/A	N/A	βΓ=40 cpm
1.5 2.0	112688 04/18/93 09:20	N/A	0	SHELBY	N/A	N/A	βΓ=40 cpm
2.0 2.5	112689 04/18/93 09:30	N/A	6	SHELBY	N/A	N/A	βΓ=40 cpm
2.5 3.0	112689 04/18/93 09:30	N/A	6	SHELBY	N/A	N/A	βΓ=40 cpm
3.0 3.5	112689 04/18/93 09:30	N/A	6	SHELBY	N/A	N/A	βΓ=40 cpm
3.5 4.0	112689 04/18/93 09:30	N/A	6	SHELBY	N/A	N/A	βΓ=40 cpm
4.0 4.5	112690 04/18/93 10:00	4	6	STIFF, (10YR 4/3) BROWN, SILTY CLAY, MEDIUM TO HIGH PLASTICITY, MOIST	CL	2	PID=0 ppm βΓ=40 cpm
4.5 5.0	112690 04/18/93 10:00	10	6	VERY STIFF, SAA	CL	2.5	βΓ=40 cpm
5.0 5.5	112690 04/18/93 10:00	12	6	VERY STIFF, (10YR 4/3) BROWN, SILTY CLAY WITH BROKEN COBBLES, MEDIUM TO HIGH PLASTICITY, MOIST	CL	2.5	PID=0 ppm βΓ=40 cpm
5.5 6.0	112691 04/18/93 10:20	4	6	STIFF, (10YR 4/3) BROWN, SILTY CLAY MEDIUM TO HIGH PLASTICITY, MOIST	CL	2	PID=0 ppm βΓ=40 cpm
6.0 6.5	112691 04/18/93 10:20	4	6	SAA	CL	2	PID=0 ppm βΓ=40 cpm

NOTES:
1 DRUM FOR DRILL CUTTINS 1 DRUM FOR ALCO NOX WATER WERE GENERATED

Boring Contractor: PENNSYLVANIA DRILLING
Driller: MARTY WATRAL
Drilling Equipment: ACKER #393

SAA = Same as Above
PID = Photoionization Detector
N/A = Not Applicable

1166

5174

PROJECT NUMBER: 20.03.05	PROJECT NAME: CRU2 RI PHASE II FIELD INVESTIGATION	
BORING NUMBER: 1970	COORDINATES: NORTH 477613.30 EAST 1379444.79	DATE:18-APR-93
GROUND ELEVATION: 571	GWL: Depth Date/Time	DATE STARTED: 18-APR-93
ENGINEER/GEOLOGIST: MUSA KESIBIR	Depth Date/Time	DATE COMPLETE: 18-APR-93
DRILLING METHOD: HOLLOW STEM AUGER (HSA)		

DEPTH	SAMPLE	DATE TIME	BLOWS ON SAMPLE	RECOVERY INCHES		USCS SYMBOL	TSF	REMARKS
6.5 7.0	112691 04/18/93 10:20		7	6	STIFF, (10YR 4/3) BROWN, SILTY CLAY WITH BROKEN COBBLES, MEDIUM TO HIGH PLASTICITY, MOIST	CL	2	PID=0 ppm BΓ=40 cpm
7.0 7.5	112892 04/18/93 10:50		N/A	6	SHELBY	N/A	N/A	BΓ=40 cpm
7.5 8.0	112892 04/18/93 10:50		N/A	6	SHELBY	N/A	N/A	BΓ=40 cpm
8.0 8.5	112892 04/18/93 10:50		N/A	6	SHELBY	N/A	N/A	BΓ=40 cpm
8.5 9.0	112892 04/18/93 10:50		N/A	0	SHELBY	N/A	N/A	BΓ=40 cpm
9.0 9.5	112893 04/18/93 13:10		3	6	MEDIUM STIFF, (10YR 4/3) BROWN, SILTY CLAY HIGH PLASTICITY, MOIST	CL	1	PID=0 ppm BΓ=40 cpm
9.5 10.0	112893 04/18/93 13:10		2	6	MEDIUM STIFF, (5GY 5/1) GREENISH GRAY, SILTY CLAY, HIGH PLASTICITY, MOIST	CL	1	PID=0 ppm BΓ=40 cpm
10.0 10.5	112893 04/18/93 13:10		3	6	SAA	CL	1	PID=0 ppm BΓ=40 cpm
10.5 11.0	112894 04/18/93 13:10		4	4	SAA	CL	1	PID=0 ppm BΓ=40 cpm

NOTES:
1 DRUM FOR DRILL CUTTINS 1 DRUM FOR ALCO NOX WATER WERE GENERATED

Boring Contractor: PENNSYLVANIA DRILLING
Driller: MARTY WATRAL
Drilling Equipment: ACKER #393

SAA = Same as Above
PID = Photoionization Detector
N/A = Not Applicable

1167

PROJECT NUMBER: 20.03.05	PROJECT NAME: CRU2 RI PHASE II FIELD INVESTIGATION	
BORING NUMBER: 1971	COORDINATES: NORTH 477709.01 EAST 1379566.04	DATE:15-APR-93
GROUND ELEVATION: 575.4	GWL: Depth Date/Time	DATE STARTED: 15-APR-93
ENGINEER/GEOLOGIST: J BOYER, J REGA	Depth Date/Time	DATE COMPLETE: 15-APR-93
DRILLING METHOD: 8 1/2 " HOLLOW STEM AUGER		

DEPTH	SAMPLE DATE TIME	BLOWS ON	SAMPLE	RECOVERY	INCHES		USCS SYMBOL	TSF	REMARKS
.5	112530 04/15/93 08:30	3		6		MEDIM STIFF, (2.5Y 5/3) LIGHT OLIVE BROWN, SILTY FINE SAND, LOW PLASTICITY, MOIST	ML	1.0	
1.0	112531 04/15/93 08:30	3		6		VERY STIFF, (2.5Y 4/3) OLIVE BROWN, SILTY CLAY, LOW PLASTICITY, MOIST	CL	3.5	βΓ=50 cpm
1.5	112532 04/15/93 08:30	5		6		STIFF, (2.5Y 4/3) OLIVE BROWN, SILTY CLAY, LOW PLASTICITY, MOIST	CL	1.25	PID=1 ppm
3.0	04/15/93 08:45	7 7 7		0		NO RECOVERY	N/A	N/A	
3.5	112533 04/15/93 09:00	7		6		SOFT, (2.5Y 4/3) OLVIE BROWN, SILTY FINE SAND, LOW PLASTICITY, MOIST	ML	0.25	PID=1 ppm βΓ=40 cpm
4.0	112534 04/15/93 09:00	9		6		STIFF, (2.5Y 4/3) OLIVE BROWN, SILTY CLAY, LOW PLASTICITY, MOIST	CL	1.75	PID=1 ppm βΓ=40 cpm
4.5	112535 04/15/93 09:00	15		4		MEDIUM STIFF, (2.5Y 5/3) LIGHT OLIVE BROWN, SILTY FINE SAND, MOIST	ML	0.50	PID=1 ppm βΓ=40 cpm
5.0	112536 04/15/93 09:05	3		6		STIFF, (10YR 4/4) DARK YELLOWISH BROWN, SILTY CLAY, SLIGHTLY PLASTIC, MOIST	CL	1	PID=1 ppm βΓ=50 cpm
5.5	112536 04/15/93 09:05	7		6		STIFF, (10YR 4/4) DARK YELLOWISH BROWN, SILTY FINE SAND, LOW PLASTICITY, MOIST	ML	1.75	PID=1 ppm βΓ=50 cpm
6.0	112536 04/15/93 09:05	15		6		STIFF, (10YR 4/6) DARK YELLOWISH BROWN, SILTY CLAY, LOW PLASTICITY, MOIST	CL	1	PID=1 ppm βΓ=50 cpm
6.5	112536 04/15/93 09:05	19		6		VERY STIFF, (2.5Y 5/4) LIGHT OLIVE BROWN, SILTY FINE SAND, LOW PLASTICITY, MOIST	ML	2.75	PID=2.75 ppm βΓ=50 cpm
7.0	112537 04/15/93 09:15	25		6		VERY STIFF, (2.5Y 5/4) LIGHT OLIVE BROWN, SILTY CLAY, SLIGHTLY PLASTIC, MOIST	CL	3.5	PID=1 ppm βΓ=50 cpm
7.5	112538 04/15/93 09:15	30		6		SAA	CL	3.75	PID=1 ppm βΓ=50 cpm

NOTES:
BOREHOLE WAS ABANDONED USING VOLCLAY FROM THE BOTTOM TO GROUND SURFACE

Boring Contractor: PENNSYLVANIA DRILLING
Driller: JOE RAAB, ROGER DAVIS
Drilling Equipment: CME-45

SAA = Same as Above
PID = Photoionization Detector
N/A = Not Applicable

1168

/02/94 17:03

PROJECT NUMBER: 20.03.05	PROJECT NAME: CRU2 RI PHASE II FIELD INVESTIGATION	
BORING NUMBER: 1971	COORDINATES: NORTH 477709.01 EAST 1379566.04	DATE:15-APR-93
GROUND ELEVATION: 575.4	GWL: Depth Date/Time	DATE STARTED: 15-APR-93
ENGINEER/GEOLOGIST: J BOYER, J REGA	Depth Date/Time	DATE COMPLETE: 15-APR-93
DRILLING METHOD: 8 1/2 " HOLLOW STEM AUGER		

DEPTH	SAMPLE	DATE TIME	BLOWS ON	SAMPLE	RECOVERY	INCHES		USCS	SYMBOL	TSF	REMARKS
7.5 8.0	112539	04/15/93 09:15	42		3		SAA	CL		3.5	PID=1 ppm βΓ=50 cpm
8.0 8.5	112540	04/15/93 09:35	6		6		SAA	CL		3.5	PID=1 ppm βΓ=50 cpm
8.5 9.0	112541	04/15/93 09:35	15		6		SAA	CL		3.5	PID=1 ppm βΓ=50 cpm
9.0 9.5	112592	04/15/93 09:35	25		3		SAA	CL		3.25	PID=1 ppm βΓ=50 cpm
9.5 10.0	112593	04/15/93 10:00	5		N/A		VERY STIFF, (10YR 5/4) YELLOWISH BROWN, SILTY CLAY, SLIGHTLY PLASTIC, MOIST	CL		3.5	PID=1 ppm βΓ=50 cpm
10.0 10.5	112593	04/15/93 10:00	24		N/A		VERY STIFF, (10YR 5/4) YELLOWISH BROWN, (2.5Y 7/1) LIGHT GRAY MOTTLES, SILTY CLAY SLIGHTLY PLASTIC, MOIST	CL		4	PID=1 ppm βΓ=50 cpm
10.5 11.0	112593	04/15/93 10:00	37		N/A		VERY STIFF, (10YR 5/4) YELLOWISH BROWN, (7.5YR 4/6) STRONG BROWN MOTTLES, (2.5Y 7.1) LIGHT GRAY MOTTLES, SILTY CLAY, SLIGHTLY PLASTIC, MOIST	CL		4	PID=1 ppm βΓ=50 cpm
11.0 11.5	112594	04/15/93 10:00	33		N/A		VERY STIFF, (2,5Y 5/6) LIGHT OLIVE BROWN, (2.5Y 7/4) LIGHT GRAY MOTTLES, SILTY CLAY, SLIGHTLY PLASTIC, MOIST	CL		3.0	PID=1 ppm βΓ=50 cpm

NOTES:
BOREHOLE WAS ABANDONED USING VOLCLAY FROM THE BOTTOM TO GROUND SURFACE

Boring Contractor: PENNSYLVANIA DRILLING
Driller: JOE RAAB, ROGER DAVIS
Drilling Equipment: CME-45

SAA = Same as Above
PID = Photoionization Detector
N/A = Not Applicable

1169

PROJECT NUMBER: 20.03.05	PROJECT NAME: CRU2 RI PHASE II FIELD INVESTIGATION	
BORING NUMBER: 1972	COORDINATES: NORTH 477958.00 EAST 1379491.36	DATE:08-APR-93
GROUND ELEVATION: 578.2	GWL: Depth Date/Time	DATE STARTED: 08-APR-93
ENGINEER/GEOLOGIST: J BOYER	Depth Date/Time	DATE COMPLETE: 08-APR-93
DRILLING METHOD: AUGER		

DEPTH	SAMPLE	DATE TIME	BLOWS ON	SAMPLE	RECOVERY	INCHES		USCS	SYMBOL	TSF	REMARKS
.5	110583	04/08/93 10:15	5		6		MEDIUM DENSE, (2.5Y 5/3) LIGHT OLIVE BROWN, CLAYEY SILT, WITH SAND AND GRAVEL SLIGHT PLASTICITY, SLIGHTLY MOIST	ML		N/A	PID=3 ppm βΓ=500 cpm
.5 1.0	110583	04/08/93 10:15	15		6		SAA	ML		N/A	PID=3 ppm βΓ=500 cpm
1.0 1.5	110583	04/08/93 10:15	13		0		NO RECOVERY	N/A		N/A	PID=3 ppm βΓ=500 cpm
1.5 2.0	110583	04/08/93 10:15	10		6		VERY STIFF, (2.5Y 5/6) LIGHT OLIVE BROWN, SILTY CLAY WITH GRAVEL, LOW PLASTICITY, SLIGHTLY MOIST	CL		3.0	PID=3 ppm βΓ=100 cpm
2.0 2.5	110583	04/08/93 10:15	10		6		SAA	CL		3.5	PID=3 ppm βΓ=100 cpm
2.5 3.0	110584	04/08/93 10:45	22		4		VERY STIFF, (2.5Y 5/6) LIGHT OLIVE BROWN, SILTY CLAY, LOW PLASTICITY, SLIGHTLY MOIST	CL		3.5	PID=3 ppm βΓ=100 cpm
3.0 3.5	110584	04/08/93 10:45	13		6		HARD, (10YR 5/6) YELLOWISH BROWN, SILTY CLAY, LOW PLASTICITY, SLIGHTLY MOIST, IRON STAINED	CL		4.5	PID=3 ppm βΓ=80-100 cpm
3.5 4.0	110584	04/08/93 10:45	17		6		SAA	CL		4.0	PID=3 ppm βΓ=80-100 cpm
4.0 4.5	110585	04/08/93 10:45	28		4		SAA	CL		4.0	PID=3 ppm βΓ=80-100 cpm
4.5 5.0	110586	04/08/93 13:15	7		6		LOOSE, (2.5Y 5/4) LIGHT OLIVE BROWN, CLAYEY SILT, TRACE GRAVEL, DRY, LOW PLASTICITY	ML		N/A	PID=3 ppm βΓ=100-120 cpm
5.0 5.5	112492	04/08/93 13:15	12		6		VERY STIFF, (10YR 5/6) YELLOWISH BROWN, SILTY CLAY, LOW PLASTICITY, DRY, MOIST	CL		3.5	PID=3 ppm βΓ=100-120 cpm
5.5 6.0	112493	04/08/93 13:15	14		4		VERY STIFF, (10YR, 5/8) YELLOWISH BROWN, SILTY CLAY, LOW-MED PLASTICITY, MOIST	CL		3.0	PID=3 ppm βΓ=100-120 cpm
6.0 6.5		04/08/93 13:15	8		0		NO RECOVERY	N/A		N/A	

NOTES:

Boring Contractor: PENNSYLVANIA DRILLING
Driller: JOE RAAB, RODGER DAVIS
Drilling Equipment: CME-45

SAA = Same as Above
PID = Photoionization Detector
N/A = Not Applicable

PROJECT NUMBER: 20.03.05	PROJECT NAME: CRU2 RI PHASE II FIELD INVESTIGATION	
BORING NUMBER: 1972	COORDINATES: NORTH 477958.00 EAST 1379491.36	DATE:08-APR-93
GROUND ELEVATION: 578.2	GWL: Depth Date/Time	DATE STARTED: 08-APR-93
ENGINEER/GEOLOGIST: J BOYER	Depth Date/Time	DATE COMPLETE: 08-APR-93
DRILLING METHOD: AUGER		

DEPTH	SAMPLE	DATE TIME	BLOWS ON	SAMPLE	RECOVERY	INCHES		USCS	SYMBOL	TSF	REMARKS
6.5 7.0		04/08/93 13:15	13		0		NO RECOVERY	N/A		N/A	
7.0 7.5		04/08/93 13:15	22		0		NO RECOVERY	N/A		N/A	
7.5 8.0	112494	04/08/93 13:45	5		6		LOOSE, (2.5Y 5/6) LIGHT OLIVE BROWN, CLAYEY SAND WITH SILT, FINE SAND, MOIST	SC		N/A	PID=3 ppm BG=80 cpm
8.0 8.5	112494	04/08/93 13:45	8		6		LOOSE, (2.5Y 6/6) OLIVE YELLOW, CLAYEY SILT, WITH FINE SAND, SLIGHTLY PLASTICITY, MOIST	ML		N/A	PID=3 ppm BG=80 cpm
8.5 9.0	112494	04/08/93 13:45	11		5		SAA	ML		N/A	PID=3 ppm BG=80 cpm
9.0 9.5	112495	04/08/93 14:00	7		6		LOOSE, (2.5Y 5/6) LIGHT OLIVE BROWN, CLAYEY SILT WITH FINE SAND, SLIGHT PLASTICITY, MOIST	ML		N/A	PID=3 ppm BG=80 cpm
9.5 10.0	112496	04/08/93 14:00	12		6		VERY STIFF, (2.5Y 5/6) LIGHT OLIVE BROWN, SILTY CLAY, MEDIUM PLASTICITY, MOIST	CL		3.0	PID=3 ppm BG=80 cpm
10.0 10.5	112497	04/08/93 14:00	20		6		VERY STIFF, (2.5Y 6/4) LIGHT YELLOWISH BROWN, SILTY CLAY, LOW PLASTICITY, MOIST	CL		3.5	PID=3 ppm BG=80 cpm

NOTES:

Boring Contractor: PENNSYLVANIA DRILLING
Driller: JOE RAAB, RODGER DAVIS
Drilling Equipment: CME-45

SAA = Same as Above
PID = Photoionization Detector
N/A = Not Applicable

PROJECT NUMBER: 20.03.05	PROJECT NAME: CRU2 RI PHASE II FIELD INVESTIGATION	
BORING NUMBER: 1975	COORDINATES: NORTH 477869.01 EAST 1379784.06	DATE:13-APR-93
GROUND ELEVATION: 578.8	GWL: Depth Date/Time	DATE STARTED: 13-APR-93
ENGINEER/GEOLOGIST: MUSA M KESEBIR	Depth Date/Time	DATE COMPLETE: 13-APR-93
DRILLING METHOD: HOLLOW STEM AUGER		

DEPTH	SAMPLE DATE TIME	BLOWS ON SAMPLE	RECOVERY INCHES		USCS SYMBOL	TSF	REMARKS
.5	112542 04/13/93 10:30	5	6	VERY STIFF, (10YR 4/2) DARK GRAYISH BROWN, SILTY CLAY, SOME PEBBLES, MOIST, MEDIUM PLASTICITY	CL	2.5	PID=0 ppm BΓ=80 cpm
.5 1.0	112543 04/13/93 10:30	6	6	SAA	CL	2.5	PID=0 ppm BΓ=80 cpm
1.0 1.5	04/13/93 10:30	6	0	NO RECOVERY	N/A	N/A	
1.5 2.0	04/13/93 10:30	5	0	NO RECOVERY	N/A	N/A	
2.0 2.5	112544 04/13/93 10:45	3	6	MEDIUM STIFF (10YR 5/3) BROWN, SILTY CLAY, MOIST TO WET, MEDIUM PLASTICITY	CL	1	PID=0 ppm BΓ=60 cpm
2.5 3.0	112544 04/13/93 10:45	3	6	SAA	CL	1	PID=0 ppm BΓ=60 cpm
3.0 3.5	112544 04/13/93 10:45	3	6	SAA	CL	1	PID=0 ppm BΓ=60 cpm
3.5 4.0	04/13/93 10:45	4	0	NO RECOVERY	N/A	N/A	
4.0 4.5	112545 04/13/93 11:00	8	6	VERY STIFF, (10YR 5/3) BROWN, CLAY, HIGH PLASTICITY, MOIST	CH	3	PID=0 ppm BΓ=60 cpm
4.5 5.0	112545 04/13/93 11:00	5	6	SAA	CH	3	PID=0 ppm BΓ=60 cpm
5.0 6.5	112546 04/13/93 13:40	N/A	N/A	PUSHED SHELBY TUBE, SAMPLE NOT DESCRIBED	N/A	N/A	
6.5 7.0	112546 04/13/93 13:40	N/A	N/A		N/A	N/A	PID=0 ppm BΓ=60 cpm
7.0 7.5	112547 04/13/93 14:10	10	6	STIFF, (10YR 5/3) BROWN, SILTY CLAY, MEDIUM PLASTICITY, MOIST	CL	2	PID=0 ppm BΓ=60 cpm

NOTES:
SOIL BORING WAS GROUTED UP USING VOLCLAY-CEMET MIX. A PIEZOMETER WAS NOT INSTALLED.

Boring Contractor: PENNSYLVANIA DRILLING
Driller: MARTY WATRAL
Drilling Equipment: ACKER #393

SAA = Same as Above
PID = Photoionization Detector
N/A = Not Applicable

1172

PROJECT NUMBER: 20.03.05	PROJECT NAME: CRU2 RI PHASE II FIELD INVESTIGATION	
BORING NUMBER: 1975	COORDINATES: NORTH 477869.01 EAST 1379784.06	DATE:13-APR-93
GROUND ELEVATION: 578.8	GWL: Depth Date/Time	DATE STARTED: 13-APR-93
ENGINEER/GEOLOGIST: MUSA M KESEBIR	Depth Date/Time	DATE COMPLETE: 13-APR-93
DRILLING METHOD: HOLLOW STEM AUGER		

DEPTH	SAMPLE	DATE TIME	BLOWS ON SAMPLE	RECOVERY	INCHES		USCS SYMBOL	TSF	REMARKS
7.5 8.0	112548	04/13/93 14:10	9	6		STIFF, (10YR 5/3) BROWN, CLAYEY SILT, LOW PLASTICITY, MOIST	ML	1.5	PID=0 ppm BΓ=60 cpm
8.0 8.5	112549	04/13/93 14:10	11	6		SAA	ML	1.5	PID=0 ppm BΓ=60 cpm
8.5 9.0	112550	04/13/93 14:25	10	6		VERY STIFF, (10YR 5/3) BROWN, LAMINATED CLAY, HIGH PLASTICITY, MOIST	CH	3	PID=0 ppm BΓ=60 cpm
9.0 9.5	112550	04/13/93 14:25	11	6		SAA	CH	3	PID=0 ppm BΓ=60 cpm
9.5 10.0	112550	04/13/93 14:25	13	6		SAA	CH	3	PID=0 ppm BΓ=60 cpm
10.0 10.5	112551	04/13/93 14:25	15	6		SAA	CH	3	PID=0 ppm BΓ=60 cpm

NOTES:
SOIL BORING WAS GROUTED UP USING VOLCLAY-CEMET MIX. A PIEZOMETER WAS NOT INSTALLED.

Boring Contractor: PENNSYLVANIA DRILLING
Driller: MARTY WATRAL
Drilling Equipment: ACKER #393

SAA = Same as Above
PID = Photoionization Detector
N/A = Not Applicable

PROJECT NUMBER: 20.03.05	PROJECT NAME: CRU2 RI PHASE II FIELD INVESTIGATION	
BORING NUMBER: 1977	COORDINATES: NORTH 477826.80 EAST 1379322.50	DATE:06-APR-93
GROUND ELEVATION: 571.8	GWL: Depth Date/Time	DATE STARTED: 06-APR-93
ENGINEER/GEOLOGIST: J BOYER	Depth Date/Time	DATE COMPLETE: 07-APR-93
DRILLING METHOD: AUGER		

DEPTH	SAMPLE	DATE TIME	BLOWS ON SAMPLE	RECOVERY	INCHES		USCS SYMBOL	T.S.F	REMARKS
.5	112498	04/06/93 08:45	3	4		STIFF, (2.5Y 4/3) OLIVE BROWN, SILTY CLAYEY WITH GRAVEL, LOW PLASTICITY, MOIST	CL	2	PID=70 ppm βΓ=40 cpm
.5 1.0	110564	04/06/93 08:45	7	5		SAA	CL	2	PID=70 ppm βΓ=40 cpm
1.0 1.5		04/06/93 08:45	12	0		NO RECOVERY	N/A	N/A	PID=70 ppm βΓ=40 cpm
1.5 2.0	110565	04/06/93 14:40	20	6		MEDIUM DENSE, (2.5Y 5/4) LIGHT OLIVE BROWN, CLAYEY SILT, WITH GRAVEL, LOW PLASTICITY, SLIGHTLY MOIST	ML	N/A	PID=1 ppm βΓ=40 cpm
2.0 2.5	110566	04/06/93 14:40	20	6		SAA	ML	N/A	PID=1 ppm βΓ=40 cpm
2.5 3.0	110567	04/06/93 14:40	30	4		VERY STIFF, (2.5Y 5/6) LIGHT OLIVE BROWN, SILTY CLAY, LOW PLASTICITY, SLIGHTLY MOIST	CL	3.5	PID=1 ppm βΓ=40 cpm
3.0 4.5	110568	04/06/93 15:15	N/A	9		SAMPLED WITH SHELBY TUBE	CL	N/A	PID=1 ppm βΓ=40 cpm
4.0 4.5	110568	04/06/93 15:15	N/A	12		SAA	CL	N/A	
4.5 5.0	110568	04/06/93 15:15	N/A	3		SAA	CL	N/A	PID=0 ppm βΓ=40.cpm
5.0 5.5	110569	04/06/93 15:45	4	6		MEDIUM STIFF, (2.5Y 5/4) LIGHT OLIVE BROWN, SILTY CLAY, MEDIUM PLASTICITY, MOIST	CL	1	PID=0 ppm βΓ=40 cpm
5.5 6.0	110569	04/06/93 15:45	4	6		SAA	CL	1	PID=0 ppm βΓ=40 cpm
6.0 6.5	110569	04/06/93 15:45	4	6		SAA	CL	1	PID=0 ppm βΓ=40 cpm
6.5 7.0	110569	04/06/93 15:45	7	6		STIFF, (2.5Y 5/4) LIGHT OLIVE BROWN, SILTY CLAY, MEDIUM PLASTICITY, MOTTLING, MOIST	CL	1.5	PID=0 ppm βΓ=40 cpm

NOTES:

SAA = Same as Above
PID = Photoionization Detector
N/A = Not Applicable

1174

PROJECT NUMBER: 20.03.05	PROJECT NAME: CRU2 RI PHASE II FIELD INVESTIGATION	
BORING NUMBER: 1977	COORDINATES: NORTH 477826.80 EAST 1379322.50	DATE:06-APR-93
GROUND ELEVATION: 571.8	GWL: Depth Date/Time	DATE STARTED: 06-APR-93
ENGINEER/GEOLOGIST: J BOYER	Depth Date/Time	DATE COMPLETE: 07-APR-93
DRILLING METHOD: AUGER		

DEPTH	SAMPLE	DATE TIME	BLOWS ON	SAMPLE	RECOVERY	INCHES		USCS	SYMBOL	TSF	REMARKS
7.0 7.5	110569 04/06/93 15:45		6		6		SAA	CL		1.5	PID=0 ppm BΓ=40 cpm
7.5 8.0	110569 04/06/93 15:45		10		6		VERY STIFF, (2.5Y 5/6) LIGHT OLIVE BROWN, SILTY CLAY, MEDIUM PLASTICITY, SLIGHT MOIST	CL		2.5	PID=0 ppm BΓ=40 cpm
8.0 8.5	110570 04/06/93 16:00		13		6		VERY STIFF, (10YR 5/6) YELLOWISH BROWN, SILTY CLAY, LOW PLASTICITY, SLIGHTLY MOIST	CL		3	PID=0 ppm BΓ=40 cpm
8.5 9.0	110571 04/06/93 16:25		8		6		VERY STIFF, (2.5Y 5/4) LIGHT OLIVE BROWN, LOW PLASTICITY, SILTY CLAY, WITH GRAVEL, SLIGHTLY MOIST	CL		2	PID=0 ppm BΓ=40 cpm
9.0 9.5	110571 04/06/93 16:25		10		6		SAA	CL		2	PID=0 ppm BΓ=40 cpm
9.5 10.0	110571 04/06/93 16:25		15		6		MEDIUM DENSE, (2.5Y 6/6) OLIVE YELLOW, CLAYEY SILT, SLIGHT PLASTICITY, SLIGHTLY MOIST	ML		N/A	PID=0 ppm BΓ=40 cpm
10.0 10.5	110572 04/06/93 16:45		8		6		VERY STIFF, (2.5Y 5/4) LIGHT OLIVE BROWN, SILTY CLAY, MOTTLING, SLIGHT-LOW PLASTICITY, SLIGHTLY MOIST	CL		2	PID=0 ppm BΓ=40 cpm
10.5 11.0	110573 04/06/93 16:45		16		6		MEDIUM DENSE, (2.5Y 5/6) LIGHT OLIVE, SILTY SAND, TRACE GRAVEL, MOIST, POORLY GRADED	SM		N/A	PID=0 ppm BΓ=40 cpm
11.0 11.5	110574 04/06/93 16:45		21		6		SAA	SM		N/A	PID=0 ppm BΓ=40 cpm
11.5 12.0	110575 04/07/93 09:55		16		6		DENSE, (2.5Y 5/6) LIGHT OLIVE BROWN, POORLY GRADED, SILTY SAND, WET	SM		N/A	PID=0 ppm BΓ=40 cpm
12.0 12.5	110575 04/07/93 09:55		30		6		SAA	SM		N/A	PID=1 ppm BΓ=70 cpm
12.5 13.0	110575 04/07/93 09:55		29		6		VERY DENSE, (2.5Y 6/1) GRAY, CLAYEY SILT, SLIGHT PLASTICITY, MOIST	ML		N/A	PID=1 ppm BΓ=70 cpm
13.0 13.5	110575 04/07/93 09:55		47		6		SAA	ML		N/A	PID=1 ppm BΓ=70 cpm

NOTES:

SAA = Same as Above
PID = Photoionization Detector
N/A = Not Applicable

1175

PROJECT NUMBER: 20.03.05	PROJECT NAME: CRU2 RI PHASE II FIELD INVESTIGATION	
BORING NUMBER: 1977	COORDINATES: NORTH 477826.80 EAST 1379322.50	DATE:06-APR-93
GROUND ELEVATION: 571.8	GWL: Depth Date/Time	DATE STARTED: 06-APR-93
ENGINEER/GEOLOGIST: J BOYER	Depth Date/Time	DATE COMPLETE: 07-APR-93
DRILLING METHOD: AUGER		

DEPTH	SAMPLE	DATE TIME	BLOWS ON SAMPLE	RECOVERY INCHES		USCS SYMBOL	TSF	REMARKS
13.5 14.0	110576 04/07/93 13:35	12	6	STIFF, (2.5Y 5/6) LIGHT OLIVE BROWN, SILTY CLAY, HIGH PLASTICITY, MOIST		CL	1.5	PID=1 ppm BΓ=75 cpm
14.0 14.5	110577 04/07/93 13:35	19	6	SAA		CL	2.0	PID=1 ppm BΓ=75 cpm
14.5 15.0	110578 04/07/93 13:45	N/A	6	SHELBY TUBE SAMPLING		CL	N/A	PID=1 ppm BΓ=75 cpm
15.0 15.5	110578 04/07/93 13:45	N/A	6	SHELBY TUBE SAMPLING, SAMPLE WAS WET		CL	N/A	PID=1 ppm BΓ=65 cpm
15.5 16.0	110578 04/07/93 13:45	N/A	6	SHELBY TUBE SAMPLING, SAMPLE WAS WET		CL	N/A	PID=1 ppm BΓ=65 cpm
16.0 16.5	110578 04/07/93 13:45	N/A	6	SHELBY TUBE SAMPLING, SAMPLE WAS WET		CL	N/A	PID=1 ppm BΓ=65 cpm
16.5 17.0	110579 04/07/93 14:10	23	6	STIFF, (2.5Y 5/1) GRAY, SILTY CLAY, WITH GRAVEL TO TRACE, LOW PLASTICITY, MOIST		CL	1	PID=1 ppm BΓ=65 cpm
17.0 17.5	110579 04/07/93 14:10	35	6	SAA		CL	1.5	PID=1 ppm BΓ=65 cpm
17.5 18.0	110579 04/07/93 14:10	57	6	SAA		CL	2	PID=1 ppm BΓ=65 cpm
18.0 18.5	110579 04/07/93 14:10	78	6	VERY DENSE, (2.5Y,5/6) LIGHT OLIVE BROWN, CLAYEY SILT, SLIGHT PLASTICITY, DRY		ML	N/A	

NOTES:

SAA = Same as Above
PID = Photoionization Detector
N/A = Not Applicable

1176

5174

PROJECT NUMBER: 20.03.05	PROJECT NAME: CRU2 RI PHASE II FIELD INVESTIGATION	
BORING NUMBER: 1978	COORDINATES: NORTH 477395.02 EAST 1379639.05	DATE:16-APR-93
GROUND ELEVATION: 570.7	GWL: Depth Date/Time	DATE STARTED: 16-APR-93
ENGINEER/GEOLOGIST: MUSA KESELSIR	Depth Date/Time	DATE COMPLETE: 16-APR-93
DRILLING METHOD: HOLLOW STEM AUGER		

DEPTH	SAMPLE	DATE TIME	BLOWS ON SAMPLE	RECOVERY INCHES		USCS SYMBOL	TSF	REMARKS
.5	112568	04/16/93 08:50	2	6	STIFF (10YR 3/2) VERY DARK GRAYISH BROWN, PEAT WITH HIGH ORGANIC CONTENT, MOIST	PT	2	PID=8 ppm BΓ=50 cpm
1.0	112569	04/16/93 08:50	5	6	VERY STIFF, (10YR 4/3) BROWN, SILTY CLAY MEDIUM-HIGH PLASTICITY, WITH SOME PEBBLES, MOIST	CH	3	PID=8 ppm BΓ=50 cpm
1.5	112570	04/16/93 08:50	10	6	SAA	CH	3	PID=8 ppm BΓ=50 cpm
2.0	112571	04/16/93 08:50	15	6	SAA	CH	3	PID=8 ppm BΓ=50 cpm
2.5	112572	04/16/93 09:10	12	6	VERY STIFF (10YR 5/3) BROWN, SILTY CLAY MEDIUM TO HIGH PLASTICITY, FEW PEBBLES, MOIST	CH	3	PID=8 ppm BΓ=50 cpm
3.0	112573	04/16/93 09:10	14	6	SAA	CH	3	PID=8 ppm BΓ=50 cpm
3.5	112574	04/16/93 09:10	14	6	SAA	CH	3	PID=8 ppm BΓ=50 cpm
4.0		04/16/93 09:10	15	0	NO RECOVERY	N/A	N/A	
4.5	112575	04/16/93 09:30	5	6	VERY STIFF (10YR 5/3) BROWN, SILTY CLAY, MEDIUM-HIGH PLASTICITY, SOME LARGE GRAVEL AND PEBBLE, MOIST	CH	3	PID=8 ppm BΓ=60 cpm
5.0	112576	04/16/93 09:30	8	6	SAA	CH	3	PID=8 ppm BΓ=60 cpm
5.5	112577	04/16/93 09:30	9	6	SAA	CH	3	PID=8 ppm BΓ=60 cpm
6.0	112578	04/16/93 09:30	13	6	STIFF (10YR 3/2) VERY DARK GRAYISH BROWN, SILTY CLAY (FILL), MEDIUM PLASTICITY, MOIST, SOME PEBBLES	CL	2	PID=8 ppm BΓ=60 cpm
6.5	112579	04/16/93 09:45	9	6	STIFF (10YR 4/3) BROWN, SILTY CLAY, MEDIUM TO HIGH PLASTICITY, WITH SOME PEBBLES, MOIST	CH	1.5	PID=8 ppm BΓ=50 cpm

NOTES:
1 BAG 50 LBS VOLCLAY AND 1/2 BAG 94 LBS CEMENT WERE USED TO GROUT.

Boring Contractor: PENNSYLVANIA DRILLING
Driller: MARTY WALTER, JOE DEILEY
Drilling Equipment: ACKER

SAA = Same as Above
PID = Photoionization Detector
N/A = Not Applicable

1177

PROJECT NUMBER: 20.03.05	PROJECT NAME: CRU2 RI PHASE II FIELD INVESTIGATION	
BORING NUMBER: 1978	COORDINATES: NORTH 477395.02 EAST 1379639.05	DATE:16-APR-93
GROUND ELEVATION: 570.7	GWL: Depth Date/Time	DATE STARTED: 16-APR-93
ENGINEER/GEOLOGIST: MUSA KESELSIR	Depth Date/Time	DATE COMPLETE: 16-APR-93
DRILLING METHOD: HOLLOW STEM AUGER		

DEPTH	SAMPLE	DATE TIME	BLOWS ON SAMPLE	RECOVERY INCHES		USCS SYMBOL	TSF	REMARKS
6.5 7.0	112590 04/16/93 09:45	10	6	SAA		CH	1.5	PID=8 ppm βΓ=50 cpm
7.0 7.5	112591 04/16/93 09:45	9	6	STIFF (10YR 2/2) VERY DARK BROWN, SILTY CLAY, MEDIUM TO HIGH PLASTICITY, MOIST		CH	2	PID=8 ppm βΓ=50 cpm
7.5 8.0	112580 04/16/93 09:45	10	6	SAA		CH	2	PID=8 ppm βΓ=50 cpm
8.0 8.5	112581 04/16/93 10:00	3	6	STIFF (10YR 5/3) BROWN, SILTY CLAY HIGH PLASTICITY, MOIST		CH	1.5	PID=8 ppm βΓ=40 cpm
8.5 9.0	112582 04/16/93 10:00	5	6	SAA		CH	1.5	PID=8 ppm βΓ=40 cpm
9.0 9.5	112583 04/16/93 10:00	6	6	SAA		CH	1.5	PID=8 ppm βΓ=40 cpm
9.5 10.0	112584 04/16/93 10:15	3	6	SAA		CH	2	PID=8 ppm βΓ=50 cpm
10.0 10.5	112584 04/16/93 10:15	5	6	SAA		CH	2	PID=8 ppm βΓ=50 cpm
10.5 11.0	112584 04/16/93 10:15	6	6	MEDIUM STIFF (5GY 6/1) GREENISH GRAY, SILTY CLAY HIGH PLASTICITY, MOIST TO WET		CH	1	PID=8 ppm βΓ=50 cpm
11.0 11.5	04/16/93 10:15	6	0	NO RECOVERY		N/A	N/A	
11.5 12.0	112585 04/16/93 10:30	5	6	VERY STIFF (5GY 4/1) DARK GREENISH GRAY SILTY CLAY, MEDIUM TO HIGH PLASTICITY, MOIST		CH	3	PID=8 ppm βΓ=40 cpm
12.0 12.5	112586 04/16/93 10:30	10	6	SAA		CH	3	PID=8 ppm βΓ=40 cpm
12.5 13.0	112587 04/16/93 10:30	15	6	STIFF (10YR 5/3) BROWN, SILTY CLAY, HIGH PLASTICITY, MOIST		CH	2	PID=8 ppm βΓ=40 cpm

NOTES:
1 BAG 50 LBS VOLCLAY AND 1/2 BAG 94 LBS CEMENT WERE USED TO GROUT.

Boring Contractor: PENNSYLVANIA DRILLING
Driller: MARTY WALTER, JOE DEILEY
Drilling Equipment: ACKER

SAA = Same as Above
PID = Photoionization Detector
N/A = Not Applicable

PROJECT NUMBER: 20.03.05	PROJECT NAME: CRU2 RI PHASE II FIELD INVESTIGATION	
BORING NUMBER: 1978	COORDINATES: NORTH 477395.02 EAST 1379639.05	DATE:16-APR-93
GROUND ELEVATION: 570.7	GWL: Depth Date/Time	DATE STARTED: 16-APR-93
ENGINEER/GEOLOGIST: MUSA KESELSIR	Depth Date/Time	DATE COMPLETE: 16-APR-93
DRILLING METHOD: HOLLOW STEM AUGER		

DEPTH	SAMPLE	DATE TIME	BLOWS ON SAMPLE	RECOVERY	INCHES		USCS	SYMBOL	TSF	REMARKS
13.0 13.5		04/16/93 10:30	18	0		NO RECOVERY	N/A		N/A	
13.5 14.0	112588	04/16/93 10:55	5	6		SAA	CH		1	PID=8 ppm BΓ=50 cpm
14.0 14.5	112588	04/16/93 10:55	20	6		SAA	CH		2	PID=8 ppm BΓ=50 cpm
14.5 15.0	112588	04/16/93 10:55	35	6		SAA	CH		3	PID=8 ppm BΓ=50 cpm
15.0 15.5	112589	04/16/83 10:55	50	4		HARD (10YR 5/1) GRAY, SILTY CLAY WITH SOME PEBBLES, MEDIUM PLASTICITY, DRY TO MOIST	CL		5	PID=8 ppm BΓ=50 cpm

NOTES:
1 BAG 50 LBS VOLCLAY AND 1/2 BAG 94 LBS CEMENT WERE USED TO GROUT.

Boring Contractor: PENNSYLVANIA DRILLING
Driller: MARTY WALTER, JOE DEILEY
Drilling Equipment: ACKER

SAA = Same as Above
PID = Photoionization Detector
N/A = Not Applicable

1179

PROJECT NUMBER: 20.03.05	PROJECT NAME: CRU2 RI PHASE II FIELD INVESTIGATION	
BORING NUMBER: 11009	COORDINATES: NORTH 478012.53 EAST 1379125.70	DATE:06-APR-93
GROUND ELEVATION: 566.9	GWL: Depth Date/Time	DATE STARTED: 06-APR-93
ENGINEER/GEOLOGIST: D O'BRIEN	Depth Date/Time	DATE COMPLETE: 07-APR-93
DRILLING METHOD: HOLLOW STEM AUGER		

DEPTH	SAMPLE	DATE TIME	BLOWS ON SAMPLE	RECOVERY INCHES		USCS SYMBOL	TSF	REMARKS
.5	110527	04/06/93 10:05	14	3	VERY STIFF, (2.5Y,4/3), OLIVE BROWN, GRAVELLY CLAY WITH ORGANICS, NO PLASTICITY, DRY	CL	2.25	PID=0 ppm BΓ=300 cpm
.5 1.0		04/06/93 10:05	25	0	NO RECOVERY	N/A	N/A	
1.0 1.5		04/06/93 10:05	18	0	NO RECOVERY	N/A	N/A	
1.5 2.0	110528	04/06/93 10:15	2	2	VERY STIFF, (2.5Y,4/3) OLIVE BROWN, GRAVELLY CLAY, NO PLASTICITY, DRY	CL	2.0	PID=0 ppm BΓ=300 cpm
2.0 2.5		04/06/93 10:15	4	6	NO RECOVERY	N/A	N/A	
2.5 3.0		04/06/93 10:15	3	0	NO RECOVERY	N/A	N/A	
3.0 3.5	110529	04/06/93 10:25	18	6	VERY STIFF, (2.5Y,4/3) OLIVE BROWN, CLAY GRAVELLY MIXED WITH FLYASH AND CONCRETE, NO PLASTICITY, DRY	CL	3.5	PID=0 ppm BΓ=900 cpm
3.5 4.0	110530	04/06/93 10:25	47	3	SAA	CL	3.75	PID=0 ppm BΓ=900 cpm
4.0 4.5		04/06/93 10:25	45	0	NO RECOVERY	N/A	N/A	
4.5 5.0	110531	04/06/93 10:35	18	6	VERY STIFF, (2.5Y,5/1) GRAY, GRAVELLY CLAY, NO PLASTICITY, DRY	CL	3.0	PID=0 ppm BΓ=200 cpm
5.0 5.5	110532	04/06/93 10:35	24	5	SAA	CL	2.75	PID=0 ppm BΓ=200 cpm
5.5 6.0		04/06/93 10:35	13	0	NO RECOVERY	N/A	N/A	
6.0 6.5	110533	04/06/93 10:45	5	5	VERY STIFF, (2.5Y,5/4) LIGHT OLIVE BROWN GRAVELLY SANDY CLAY, NO PLASTICITY, DRY	CL	2.25	PID=0 ppm BΓ=120 cpm

NOTES:
BACKGROUND: HNU = 0 PPM, BETA GAMMA = 80 CPM

Boring Contractor: PENNYLVANIA DRILLING CO.
Driller: KEVIN MYERS, DONNY ARTHUR
Drilling Equipment: ACKER SENTRY

SAA = Same as Above
PID = Photoionization Detector
N/A = Not Applicable

1180

PROJECT NUMBER: 20.03.05	PROJECT NAME: CRU2 RI PHASE II FIELD INVESTIGATION	
BORING NUMBER: 11009	COORDINATES: NORTH 478012.53 EAST 1379125.70	DATE:06-APR-93
GROUND ELEVATION: 566.9	GWL: Depth Date/Time	DATE STARTED: 06-APR-93
ENGINEER/GEOLOGIST: D O'BRIEN	Depth Date/Time	DATE COMPLETE: 07-APR-93
DRILLING METHOD: HOLLOW STEM AUGER		

DEPTH	SAMPLE	DATE TIME	BLOWS ON SAMPLE	RECOVERY INCHES		USCS SYMBOL	TSF	REMARKS
6.5 7.0		04/06/93 10:45	8	0	NO RECOVERY	N/A	N/A	
7.0 7.5		04/06/93 10:45	18	0	NO RECOVERY	N/A	N/A	
7.5 8.0	110534	04/06/93 11:00	14	6	DENSE, (2.5Y,5/1) GRAY, SILT WITH GRAVEL, MOIST	ML	N/A	PID=0 ppm BΓ=80 cpm
8.0 8.5	110535	04/06/93 11:00	14	6	VERY STIFF, (2.5Y,5/6) LIGHT OLIVE BROWN, SANDY GRAVELLY CLAY, NO PLASTICITY, WET	CL	2.5	PID=0 ppm BΓ=80 cpm
8.5 9.0	110536	04/06/93 11:00	18	6	SAA	CL	2.5	PID=0 ppm BΓ=80 cpm
9.0 9.5	110587	04/06/93 13:15	8	6	MEDIUM DENSE, (2.5Y,5/1) GRAY, GRAVELLY SILT, WET	ML	N/A	PID=0 ppm BΓ=100 cpm
9.5 10.0	110588	04/06/93 13:15	13	6	SAA	ML	N/A	PID=0 ppm BΓ=100 cpm
10.0 10.5		04/06/93 13:15	14	0	NO RECOVERY	N/A	N/A	
10.5 11.0	110589	04/06/93 13:30	4	6	VERY STIFF, (2.5Y,5/1) GRAY, GRAVELLY SILTY CLAY, NO PLASTICITY, WET	CL	2.5	PID=0 ppm BΓ=120 cpm
11.0 11.5	110590	04/06/93 13:30	5	4	MEDIUM DENSE, (2.5Y,5/1) GRAY, SANDY GRAVELLY SILT, WET	ML	N/A	PID=0 ppm BΓ=120 cpm
11.5 12.0		04/06/93 13:30	18	0	NO RECOVERY	N/A	N/A	
12.0 12.5	110591	04/06/93 13:40	4	6	MEDIUM DENSE, (2.5Y,5/1) GRAY, GRAVELLY CLAYEY SILT, WET	ML	N/A	PID=0 ppm BΓ=100 cpm
12.5 13.0	110592	04/06/93 13:40	5	5	MEDIUM DENSE, (2.5Y,5/1) GRAY, CLAYEY SAND WITH GRAVEL, WET	SC	N/A	PID=0 ppm BΓ=100 cpm

NOTES:
BACKGROUND: HNU = 0 PPM, BETA GAMMA = 80 CPM

Boring Contractor: PENNYLVANIA DRILLING CO.
Driller: KEVIN MYERS, DONNY ARTHUR
Drilling Equipment: ACKER SENTRY

SAA = Same as Above
PID = Photoionization Detector
N/A = Not Applicable

PROJECT NUMBER: 20.03.05	PROJECT NAME: CRU2 RI PHASE II FIELD INVESTIGATION	
BORING NUMBER: 11009	COORDINATES: NORTH 478012.53 EAST 1379125.70	DATE:06-APR-93
GROUND ELEVATION: 566.9	GWL: Depth Date/Time	DATE STARTED: 06-APR-93
ENGINEER/GEOLOGIST: D O'BRIEN	Depth Date/Time	DATE COMPLETE: 07-APR-93
DRILLING METHOD: HOLLOW STEM AUGER		

DEPTH	SAMPLE	DATE TIME	BLOWS ON	SAMPLE	RECOVERY	INCHES		USCS SYMBOL	TSF	REMARKS
13.0 13.5		04/06/93 13:40	18		0		NO RECOVERY	N/A	N/A	
13.5 14.0	110593	04/06/93 14:05	18		6		VERY DENSE, (2.5Y,5/1) GRAY, CLAYEY SAND WITH GRAVEL, MOIST	SC	N/A	PID=0 ppm BΓ=100 cpm
14.0 14.5	110594	04/06/93 14:05	49		3		HARD, (2.5Y,5/1) GRAY, GRAVELLY CLAY, NO PLASTICITY, DRY	CL	4.5	PID=0 ppm BΓ=100 cpm
14.5 15.0		04/06/93 14:05	50		0		NO RECOVERY	N/A	N/A	
15.0 15.5	110595	04/07/93 09:30	18		6		HARD, (2.5Y,5/1) GRAY, GRAVELLY CLAY, NO PLASTICITY, DRY	CL	4.0	PID=0 ppm BΓ=80 cpm
15.5 16.0	110596	04/07/93 09:30	36		4		HARD, (10YR,4/6) DARK YELLOWISH BROWN, GRAVELLY CLAY, NO PLASTICITY, DRY	CL	4.5	PID=0 ppm BΓ=80 cpm
16.0 16.5		04/07/93 09:30	50		0		NO RECOVERY	N/A	N/A	

NOTES:
BACKGROUND: HNU = 0 PPM, BETA GAMMA = 80 CPM

Boring Contractor: PENNYLVANIA DRILLING CO.
Driller: KEVIN MYERS, DONNY ARTHUR
Drilling Equipment: ACKER SENTRY

SAA = Same as Above
PID = Photoionization Detector
N/A = Not Applicable

1182

02/02/94 17:03

PROJECT NUMBER: 20.03.05	PROJECT NAME: CRU2 RI PHASE II FIELD INVESTIGATION	
BORING NUMBER: 11010	COORDINATES: NORTH 478066.92 EAST 1379108.78	DATE:02-APR-93
GROUND ELEVATION: 567.7	GWL: Depth 9.2 Date/Time 05-Apr-93 10:00	DATE STARTED: 02-APR-93
ENGINEER/GEOLOGIST: D O'BRIEN	Depth Date/Time	DATE COMPLETE: 05-APR-93
DRILLING METHOD: HOLLOW STEM AUGER		

DEPTH	SAMPLE	DATE TIME	BLOWS ON	SAMPLE	RECOVERY	INCHES		USCS SYMBOL	TSF	REMARKS
.5	110511	04/02/93 15:20	4		6		SOFT, (2.5Y, 6/3) LIGHT YELLOWISH BROWN, CLAY W/ORGANICS, LOW PLASTICITY, MOIST; BLACK FLYASH BOTTOM 3"	CL	.25	PID=0 ppm BΓ=100 cpm
.5 1.0		04/02/93 00:00	5		0		NO RECOVERY	N/A	N/A	
1.0 1.5		04/02/93 00:00	8		0		NO RECOVERY	N/A	N/A	
1.5 2.0	110512	04/02/93 15:25	N/A		N/A		VERY STIFF (10YR, 6/6) BROWNISH, YELLOW, GRAVELLY CLAY, NO PLASTICITY, DRY	CL	2.75	PID=0 ppm BΓ=80 cpm
2.0 2.5	110513	04/02/93 15:25	14		3		SAA	CL	2.5	PID=0 ppm BΓ=80 cpm
2.5 3.0		04/02/93 00:00	12		0		NO RECOVERY	N/A	N/A	
3.0 3.5	110514	04/02/93 15:30	20		3		VERY STIFF, (10YR, 6/6) BROWNISH YELLOW, GRAVELLY CLAY, TRACE FLYASH, NO PLASTICITY, DRY	CL	2	PID=0 ppm BΓ=60 cpm
3.5 4.0		04/02/93 00:00	22		0		NO RECOVERY	N/A	N/A	
4.0 4.5		04/02/93 00:00	25		0		NO RECOVERY	N/A	N/A	
4.5 5.0	110515	04/02/93 15:45	3		6		LOOSE, (10YR, 6/6) BROWNISH YELLOW, SILTY CLAYEY SAND, FINE, MOIST	SC	N/A	PID=0 ppm BΓ=60 cpm
5.0 5.5	110516	04/02/93 15:45	4		3		SAA	SC	N/A	PID=0 ppm BΓ=60 cpm
5.5 6.0		04/02/93 00:00	3		0		NO RECOVERY	N/A	N/A	
6.0 6.5	110517	04/02/93 16:00	16		6		TOP 2" DENSE (2.5Y, 5/6) LIGHT OLIVE BROWN, COARSE SAND WITH GRAVEL, WELL GRADED, WET; VERY STIFF, (2.5Y, 5/6) LIGHT OLIVE BROWN, GRAVELLY CLAY W/SILT, NKO PLASTICITY, DRY	SW CL	N/A 2.5	PID=0 ppm BΓ=60 cpm

NOTES:

Boring Contractor: PENNYLVANIA DRILLING CO.
Driller: KEVIN MYERS, DONNY ARTHUR
Drilling Equipment: ACKER SENTRY

SAA = Same as Above
PID = Photoionization Detector
N/A = Not Applicable

1183

PROJECT NUMBER: 20.03.05	PROJECT NAME: CRU2 RI PHASE II FIELD INVESTIGATION	
BORING NUMBER: 11010	COORDINATES: NORTH 478066.92 EAST 1379108.78	DATE:02-APR-93
GROUND ELEVATION: 567.7	GWL: Depth 9.2 Date/Time 05-Apr-93 10:00	DATE STARTED: 02-APR-93
ENGINEER/GEOLOGIST: D O'BRIEN	Depth Date/Time	DATE COMPLETE: 05-APR-93
DRILLING METHOD: HOLLOW STEM AUGER		

DEPTH	SAMPLE	DATE TIME	BLOWS ON	SAMPLE	RECOVERY	INCHES		USCS SYMBOL	TSF	REMARKS
6.5 7.0	110518	04/02/93 16:00	22		6		SAA	CL	2.5	PID=0 ppm βΓ=60 cpm
7.0 7.5		04/02/93 00:00	25		0		NO RECOVERY	N/A	N/A	
7.5 8.0	110519	04/02/93 16:10	8		6		DENSE, (2.5Y, 5/1) GRAY, SILT, WET	N/A	N/A	PID=0 ppm βΓ=60 cpm
8.0 8.5		04/02/93 00:00	22		0		NO RECOVERY	N/A	N/A	
8.5 9.0		04/02/93 00:00	24		0		NO RECOVERY	N/A	N/A	
9.0 9.5	110520	04/02/93 16:25	8		6		DENSE, (2.5Y, 5/1) GRAY, GRAVELLY SANDY SILT, WET	ML	N/A	PID=0 ppm βΓ=40 cpm
9.5 10.0	110521	04/02/93 16:25	12		3		SAA	ML	N/A	PID=0 ppm βΓ=40 cpm
10.0 10.5		04/02/93 00:00	20		0		NO RECOVERY	N/A	N/A	
10.5 11.0	110522	04/02/93 16:35	7		5		MEDIUM DENSE, (2.5Y, 5/1) GRAY GRAVELLY SILT, WET	ML	N/A	PID=0 ppm βΓ=40 cpm
11.0 11.5		04/02/93 00:00	8		0		NO RECOVERY	N/A	N/A	
11.5 12.0		04/02/93 00:00	7		0		NO RECOVERY	N/A	N/A	
12.0 12.5	110523	04/05/93 09:50	4		6		STIFF, (2.5Y, 5/1) GRAY, GRAVELLY CLAY, LOW PLASTICITY, WET TO MOIST	CL	1.75	PID=0 ppm βΓ=60 cpm
12.5 13.0	110524	04/05/93 09:30	8		5		VERY STIFF, (2.5Y, 5/1) GRAY GRAVELLY CLAY, NO PLASTICITY, SLIGHTLY MOIST	CL	2.25	

NOTES:

Boring Contractor: PENNYLVANIA DRILLING CO.
Driller: KEVIN MYERS, DONNY ARTHUR
Drilling Equipment: ACKER SENTRY

SAA = Same as Above
PID = Photoionization Detector
N/A = Not Applicable

1184

PROJECT NUMBER: 20.03.05	PROJECT NAME: CRU2 RI PHASE II FIELD INVESTIGATION	
BORING NUMBER: 11010	COORDINATES: NORTH 478066.92 EAST 1379108.78	DATE:02-APR-93
GROUND ELEVATION: 567.7	GWL: Depth 9.2 Date/Time 05-Apr-93 10:00	DATE STARTED: 02-APR-93
ENGINEER/GEOLOGIST: D O'BRIEN	Depth Date/Time	DATE COMPLETE: 05-APR-93

DRILLING METHOD: HOLLOW STEM AUGER

DEPTH	SAMPLE	DATE TIME	BLOWS ON SAMPLE	RECOVERY INCHES		USCS SYMBOL	TSF	REMARKS
13.0 13.5		04/05/93 09:30	17	0	NO RECOVERY	N/A	N/A	
13.5 14.0	110525	04/02/93 13:10	4	5	VERY STIFF, (2.5Y, 5/1) GRAY GRAVELLY CLAY, NO PLASTICITY, SLIGHTLY MOIST	CL	2	PID=0 ppm BI=60 cpm
14.0 14.5		04/05/93 00:00	5	0	NO RECOVERY	N/A	N/A	
14.5 15.0		04/05/93 00:00	22	0	NO RECOVERY	N/A	N/A	

NOTES:

Boring Contractor: PENNYLVANIA DRILLING CO.
Driller: KEVIN MYERS, DONNY ARTHUR
Drilling Equipment: ACKER SENTRY

SAA = Same as Above
PID = Photoionization Detector
N/A = Not Applicable

1185

PROJECT NUMBER: 20.03.05	PROJECT NAME: CRU2 RI PHASE II FIELD INVESTIGATION	
BORING NUMBER: 11011	COORDINATES: NORTH 477937.53 EAST 1379125.69	DATE:08-APR-93
GROUND ELEVATION: 567.7	GWL: Depth Date/Time	DATE STARTED: 08-APR-93
ENGINEER/GEOLOGIST: D O'BRIEN	Depth Date/Time	DATE COMPLETE: 12-APR-93
DRILLING METHOD: HOLLOW STEM AUGER		

DEPTH	SAMPLE	DATE TIME	BLOWS ON SAMPLE	RECOVERY	INCHES		USCS SYMBOL	TSF	REMARKS
.5	110598	04/08/93 13:50	3	5		VERY STIFF (2.5Y, 3/3) DARK OLIVE BROWN, GRAVELLY CLAY WITH ORGANICS NO PLASTICITY, DRY	CL	2.5	PID=0 ppm BΓ=100 cpm
.5 1.0		04/08/93 13:50	4	0		NO RECOVERY	N/A	N/A	
1.0 1.5		04/08/93 13:50	8	0		NO RECOVERY	N/A	N/A	
1.5 2.0	110599	04/08/93 13:52	8	6		STIFF (10YR, 4/4) DARK YELLOWISH BROWN CLAY WITH GRAVEL, LOW PLASTICITY, SLIGHTLY MOIST	CL	1.75	PID=0 ppm BΓ=150 cpm
2.0 2.5	110600	04/08/93 13:52	12	4		SAA	CL	1.75	PID=0 ppm BΓ=150 cpm
2.5 3.0		04/08/93 13:52	14	0		NO RECOVERY	N/A	N/A	
3.0 3.5	110601	04/08/93 13:55	18	6		VERY STIFF (2.5Y, 5/6) LIGHT OLIVE BROWN, GRAVELLY CLAY WITH CONCRETE, FLYASH, LOW PLASTICITY, SLIGHTLY MOIST	CL	2.5	PID=0 ppm BΓ=100 cpm
3.5 4.0	110602	04/08/93 13:55	47	6		SAA	CL	3.75	PID=0 ppm BΓ=100 cpm
4.0 4.5		04/08/93 14:00	26	0		NO RECOVERY	N/A	N/A	
4.5 5.0	110603	04/08/93 14:10	6	4		STIFF (2.5Y, 5/6) LIGHT OLIVE BROWN, GRAVELLY CLAY WITH ORGANICS, NO PLASTICITY, DRY	CL	1.25	PID=0 ppm BΓ=150 cpm
5.0 5.5		04/08/93 14:15	7	0		NO RECOVERY	N/A	N/A	
5.5 6.0		04/08/93 14:15	9	0		NO RECOVERY	N/A	N/A	
6.0 6.5	110604	04/08/93 14:20	4	3		MEDIUM STIFF (2.5Y, 5/4) LIGHT OLIVE BROWN, GRAVELLY CLAY, LOW PLASTICITY, MOIST	CL	.75	PID=0 ppm BΓ=100 cpm

NOTES:

Boring Contractor: PENNSYLVANIA DRILLING CO.
Driller: KEVIN MYERS, DONNY ARTHUR
Drilling Equipment: ACKER SENTRY

SAA = Same as Above
PID = Photoionization Detector
N/A = Not Applicable

1186

PROJECT NUMBER: 20.03.05	PROJECT NAME: CRU2 RI PHASE II FIELD INVESTIGATION	
BORING NUMBER: 11011	COORDINATES: NORTH 477937.53 EAST 1379125.69	DATE:08-APR-93
GROUND ELEVATION: 567.7	GWL: Depth Date/Time	DATE STARTED: 08-APR-93
ENGINEER/GEOLOGIST: D O'BRIEN	Depth Date/Time	DATE COMPLETE: 12-APR-93
DRILLING METHOD: HOLLOW STEM AUGER		

DEPTH	SAMPLE	DATE TIME	BLOWS ON	SAMPLE	RECOVERY	INCHES		USCS SYMBOL	TSF	REMARKS
6.5 7.0		04/08/93 14:20	6		0		NO RECOVERY	N/A	N/A	
7.0 7.5		04/08/93 14:20	6		0		NO RECOVERY	N/A	N/A	
7.5 8.0		04/08/93 14:20	1		0		NO RECOVERY	N/A	N/A	
8.0 8.5		04/08/93 14:20	3		0		NO RECOVERY	N/A	N/A	
8.5 9.0		04/08/93 14:20	4		0		NO RECOVERY	N/A	N/A	
9.0 9.5	110605	04/08/93 14:45	6		6		STIFF (2.5Y 4/3) OLIVE BROWN, GRAVELLY CLAY WITH FLYASH AND CONCRETE, LOW PLASTICITY, MOIST	CL	1	PID=0 ppm βΓ=300 cpm
9.5 10.0	110606	04/08/93 14:45	6		3		SAA	CL	1	PID=0 ppm βΓ=300 cpm
10.0 10.5		04/08/93 14:45	12		0		NO RECOVERY	N/A	N/A	
10.5 11.0	110607	04/08/93 14:55	8		4		STIFF (2.5Y, 4/3) OLIVE BROWN, GRAVELLY CLAY WITH FLYASH, NO PLASTICITY, MOIST	CL	1	PID=0 ppm βΓ=100 cpm
11.0 11.5		04/08/93 14:55	25		0		NO RECOVERY	N/A	N/A	
11.5 12.0		04/08/93 14:55	26		0		NO RECOVERY	N/A	N/A	
12.0 12.5	110608	04/08/93 15:05	8		6		STIFF (10YR, 4/6) DARK YELLOWISH BROWN, GRAVELLY CLAY WITH FLYASH, LOW PLASTICITY, MOIST	CL	1	PID=0 ppm βΓ=100 cpm
12.5 13.0	110609	04/08/93 15:05	13		6		STIFF (10YR, 4/6) DARK YELLOWISH BROWN GRAVELLY, SANDY CLAY WITH COPPER WIRE, LOW PLASTICITY, MOIST	CL	1	PID=0 ppm βΓ=100 cpm

NOTES:

Boring Contractor: PENNSYLVANIA DRILLING CO.
Driller: KEVIN MYERS, DONNY ARTHUR
Drilling Equipment: ACKER SENTRY

SAA = Same as Above
PID = Photoionization Detector
N/A = Not Applicable

PROJECT NUMBER: 20.03.05	PROJECT NAME: CRU2 RI PHASE II FIELD INVESTIGATION	
BORING NUMBER: 11011	COORDINATES: NORTH 477937.53 EAST 1379125.69	DATE:08-APR-93
GROUND ELEVATION: 567.7	GWL: Depth Date/Time	DATE STARTED: 08-APR-93
ENGINEER/GEOLOGIST: D O'BRIEN	Depth Date/Time	DATE COMPLETE: 12-APR-93
DRILLING METHOD: HOLLOW STEM AUGER		

DEPTH	SAMPLE	DATE TIME	BLOWS ON SAMPLE	RECOVERY INCHES		USCS SYMBOL	TSF	REMARKS
13.0 13.5	110610 04/08/93 15:05		14	4	SAA	CL	1	PID=0 ppm BΓ=100 cpm
13.5 14.0	110611 04/08/93 15:15		14	6	STIFF (10YR, 2/2) VERY DARK BROWN, SANDY CLAY WITH GRAVEL, NO PLASTICITY, MOIST	CL	1.25	PID=0 ppm BΓ=100 cpm
14.0 14.5	110612 04/08/93 15:15		22	6	SAA	CL	1.25	PID=0 ppm BΓ=100 cpm
14.5 15.0	110613 04/08/93 15:15		28	6	HARD (2.5Y, 4/4) OLIVE BROWN, CLAY WITH GRAVEL, NO PLASTICITY, DRY	CL	4.5	PID=0 ppm BΓ=100 cpm
15.0 15.5	110614 04/08/93 15:35		24	6	HARD (10YR, 5/6) DARK YELLOWISH BROWN, GRAVELLY CLAY, NO PLASTICITY, DRY	CL	4.5	PID=0 ppm BΓ=100 cpm
15.5 16.0	110615 04/08/93 15:30		24	3	SAA	CL	4.5	PID=0 ppm BΓ=100 cpm
16.0 16.5	04/08/93 15:40		28	0	NO RECOVERY	N/A	N/A	
16.5 17.0	110616 04/08/93 15:45		9	6	STIFF (2.5Y, 4/4) OLIVE BROWN, GRAVELLY CLAY WITH CONCRETE & WIRE, NO PLASTICITY, DRY	CL	1.25	PID=0 ppm BΓ=100 cpm
17.0 17.5	110617 04/08/93 15:45		12	6	SAA	CL	1.25	PID=0 ppm BΓ=100 cpm
17.5 18.0	04/08/93 15:45		16	0	NO RECOVERY	N/A	N/A	
18.0 18.5	110618 04/08/93 16:15		3	6	STIFF (2.5Y, 4/4) OLIVE BROWN, SANDY CLAY WITH GRAVEL, NO PLASTICITY, DRY	CL	1.75	PID=0 ppm BΓ=50 cpm
18.5 19.0	04/08/93 16:15		4	0	NO RECOVERY	N/A	N/A	
19.0 19.5	04/08/93 16:15		5	0	NO RECOVERY	N/A	N/A	

NOTES:

Boring Contractor: PENNSYLVANIA DRILLING CO.
Driller: KEVIN MYERS, DONNY ARTHUR
Drilling Equipment: ACKER SENTRY

SAA = Same as Above
PID = Photoionization Detector
N/A = Not Applicable

5174 02/02/94 17:03

PROJECT NUMBER: 20.03.05	PROJECT NAME: CRU2 RI PHASE II FIELD INVESTIGATION	
BORING NUMBER: 11012	COORDINATES: NORTH 478019.56 EAST 1379211.26	DATE:20-OCT-92
GROUND ELEVATION: 570.1	GWL: Depth Date/Time	DATE STARTED: 20-OCT-92
ENGINEER/GEOLOGIST: A COMO	Depth Date/Time	DATE COMPLETE: 03-DEC-92
DRILLING METHOD: HOLLOW STEM AUGER		

DEPTH	SAMPLE	DATE TIME	BLOWS ON	SAMPLE	RECOVERY	INCHES		USCS SYMBOL	TSF	REMARKS
.5	110687	04/07/93 14:35	3		6		HARD, (2.5Y,5/4) LIGHT OLIVE BROWN, SILTY CLAY WITH SOME SMALL PIECES OF GRAVEL, LOW PLASTICITY, MOIST	CL	4	PID=0 ppm BΓ=60-80 cpm
.5 1.0	110688	04/07/93 14:35	5		6		SAA	CL	4.0	PID=0 ppm BΓ=60-80 cpm
1.0 1.5	110689	04/07/93 14:35	9		6		SAA	CL	4	PID=0 ppm BΓ=60-80 cpm
1.5 2.0	110690	04/07/93 14:38	10		6		HARD, (2.5Y,6/6) OLIVE YELLOW, SILTY CLAY, SOME SMALL GRAVEL, NO PLASTICITY, DRY	CL	4.5	PID=0 ppm BΓ=60-80 cpm
2.0 2.5	110691	04/07/93 14:38	12		6		SAA	CL	4.5	PID=0 ppm BΓ=60-80 cpm
2.5 3.0		04/07/93 14:38	12		0		NO RECOVERY	N/A	N/A	
3.0 3.5	110692	04/07/93 14:45	5		6		STIFF, (2.5Y,5/4) LIGHT OLIVE BROWN, SILTY CLAY, LOW PLASTICITY, DRY	CL	2.0	PID=0 ppm BΓ=60-80 cpm
3.5 4.0	110693	04/07/93 14:45	6		6		SAA	CL	3.5	PID=0 ppm BΓ=60-80 cpm
4.0 4.5	110694	04/07/93 14:45	6		2		SAA	CL	2.5	PID=0 ppm BΓ=60-80 cpm
4.5 5.0	110695	04/07/93 14:47	7		6		VERY STIFF, (2.5Y,5/6) LIGHT OLIVE BROWN, SILTY CLAY, SOME GRAVEL, LOW PLASTICITY, DRY	CL	2.5	PID=0 ppm BΓ=60-80 cpm
5.0 5.5	110696	04/07/93 14:47	8		6		SAA	CL	2.0	PID=0 ppm BΓ=60-80 cpm
5.5 6.0		04/07/93 14:47	7		0		NO RECOVERY	N/A	N/A	
6.0 6.5	110697	04/07/93 14:55	8		6		VERY STIFF, (2.5Y,6/6) OLIVE YELLOW, SILTY CLAY WITH (2.5Y,8/10) WHITE CLAY INTERBEDDED, LOW PLASTICITY, SOME GRAVEL, DRY	CL	2.5	PID=0 ppm BΓ=60-80 cpm

NOTES:
HYDROPUNCH BORING; BACKGROUND: HNU = 0 PPM, BETA GAMMA = 80 CPM

Driller: DON SMITH
Drilling Equipment: MOBILE B-80

SAA = Same as Above
PID = Photoionization Detector
N/A = Not Applicable

PROJECT NUMBER: 20.03.05	PROJECT NAME: CRU2 RI PHASE II FIELD INVESTIGATION	
BORING NUMBER: 11012	COORDINATES: NORTH 478019.56 EAST 1379211.26	DATE:20-OCT-92
GROUND ELEVATION: 570.1	GWL: Depth Date/Time	DATE STARTED: 20-OCT-92
ENGINEER/GEOLOGIST: A COMO	Depth Date/Time	DATE COMPLETE: 03-DEC-92
DRILLING METHOD: HOLLOW STEM AUGER		

DEPTH	SAMPLE	DATA TIME	BLOWS ON	SAMPLE	RECOVERY	INCHES		USCS SYMBOL	TSF	REMARKS
6.5 7.0	110698 04/07/93 14:55		10		6		SAA	CL	3	PID=0 ppm βΓ=60-80 cpm
7.0 7.5	110699 04/07/93 14:55		13		4		SAA	CL	3	PID=0 ppm βΓ=60-80 cpm
7.5 8.0	110700 04/07/93 15:05		14		6		SAA	CL	2	PID=0 ppm βΓ=80-100 cpm
8.0 8.5	110701 04/07/93 15:05		18		6		VERY STIFF, (2.5Y,7/0) LIGHT GRAY, SILTY CLAY SOME GRAVEL, LOW PLASTICITY, DRY	CL	3.5	PID=0 ppm βΓ=80-100 cpm
8.5 9.0	110702 04/07/93 15:05		24		6		SAA	CL	1.5	PID=0 ppm βΓ=80-100 cpm
9.0 9.5	110703 04/07/93 15:20		21		6		SAA	CL	1	PID=0 ppm βΓ=60-80 cpm
9.5 10.0	110704 04/07/93 15:20		23		6		STIFF, (2.5Y,7/0) LIGHT GRAY, SILTY CLAY, SOME GRAVEL, MEDIUM PLASTICITY, WET	CL	1.5	PID=0 ppm βΓ=60-80 cpm
10.0 10.5	110705 04/07/93 15:20		28		6		VERY DENSE (2.5Y, 5/3) LIGHT OLIVE BROWN, SILTY SAND, NO PLASTICITY, WET	SM	N/A	PID=0 ppm βΓ=60-80 cpm
10.5 11.0	110706 04/07/93 15:35		4		6		VERY STIFF, (2.5Y,6/4) SILTY CLAY, MEDIUM PLASTICITY, WET	CL	2.5	PID=0 ppm βΓ=40-60 cpm
11.0 11.5	110707 04/07/93 15:35		6		6		SAA	CL	2.5	PID=0 ppm βΓ=40-60 cpm
11.5 12.0	110708 04/07/93 15:35		5		3		MEDIUM DENSE, (2.5Y,5/3) LIGHT OLIVE BROWN, SILTY SAND, NO PLASTICITY, WET	SM	N/A	PID=0 ppm βΓ=40-60 cpm
12.0 12.5	110709 04/07/93 15:40		15		6		SAA	SM	N/A	PID=0 ppm βΓ=60-80 cpm
12.5 13.0	110710 04/07/93 15:40		10		6		SAA	SM	N/A	PID=0 ppm βΓ=60-80 cpm

NOTES:
HYDROPUNCH BORING; BACKGROUND: HNU = 0 PPM, BETA GAMMA = 80 CPM

Driller: DON SMITH
Drilling Equipment: MOBILE B-80

SAA = Same as Above
PID = Photoionization Detector
N/A = Not Applicable

1190

PROJECT NUMBER: 20.03.05	PROJECT NAME: CRU2 RI PHASE II FIELD INVESTIGATION	
BORING NUMBER: 11012	COORDINATES: NORTH 478019.56 EAST 1379211.26	DATE:20-OCT-92
GROUND ELEVATION: 570.1	GWL: Depth Date/Time	DATE STARTED: 20-OCT-92
ENGINEER/GEOLOGIST: A COMO	Depth Date/Time	DATE COMPLETE: 03-DEC-92
DRILLING METHOD: HOLLOW STEM AUGER		

DEPTH	SAMPLE	DATE TIME	BLOWS ON	SAMPLER	RECOVERY	INCHES		USCS SYMBOL	TSF	REMARKS
13.0 13.5	110711 04/07/93 15:40		15		6		VERY STIFF, (2.5Y,5/0) GRAY, SILTY CLAY, SOME GRAVEL, LOW PLASTICITY, DRY	CL	2.5	PID=0 ppm BΓ=60-80 cpm
13.5 14.0	110712 04/08/93 10:05		12		6		MEDIUM DENSE (2.5Y,5/4) DARK GRAY, SILTY SAND, SOME GRAVEL, NO PLASTICITY, MOIST	SM	N/A	PID=0 ppm BΓ=40-60 cpm
14.0 14.5	110713 04/08/93 10:05		12		6		STIFF, (2.5Y,5/0) GRAY, SILTY CLAY, SOME SMALL GRAVEL, MEDIUM PLASTICITY, DRY	CL	2	PID=0 ppm BΓ=40-60 cpm
14.5 15.0	04/08/93 10:05		17		0		NO RECOVERY	N/A	N/A	

NOTES:
HYDROPUNCH BORING; BACKGROUND: HNU = 0 PPM, BETA GAMMA = 80 CPM

Driller: DON SMITH
Drilling Equipment: MOBILE B-80

SAA = Same as Above
PID = Photoionization Detector
N/A = Not Applicable

PROJECT NUMBER: 20.03.05	PROJECT NAME: CRU2 RI PHASE II FIELD INVESTIGATION	
BORING NUMBER: 11013	COORDINATES: NORTH 478009.63 EAST 1379539.72	DATE:17-APR-93
GROUND ELEVATION: 578.9	GWL: Depth 7 Date/Time 17-Apr-93 13:05	DATE STARTED: 17-APR-93
ENGINEER/GEOLOGIST: J REAGAN	Depth Date/Time	DATE COMPLETE: 17-APR-93
DRILLING METHOD: HOLLOW STEM AUGER		

DEPTH	SAMPLE DATE TIME	BLOWS ON SAMPLE	RECOVERY INCHES		USCS SYMBOL	TSF	REMARKS
.5	112742 04/17/93 10:10	5	6	SOFT (10YR, 3/3) DARK YELLOWISH BROWN, SILTY FINE SAND, LOW PLASTICITY, MOIST	ML	.5	PID=1 ppm βΓ=80 cpm
.5 1.0	112793 04/17/93 10:10	12	6	VERY STIFF (2.5Y, 5/4) LIGHT OLIVE BROWN, SILTY CLAY, SLIGHTLY PLASTIC, MOIST	CL	3	PID=1 ppm βΓ=80 cpm
1.0 1.5	04/17/93 10:10	14	0	NO RECOVERY	N/A	N/A	
1.5 2.0	112794 04/17/93 10:20	14	6	VERY STIFF (2.5Y, 5/4) LIGHT OLIVE BROWN, SILTY CLAY, SLIGHTLY PLASTIC, MOIST	CL	3	PID=1 ppm βΓ=100 cpm
2.0 2.5	112795 04/17/93 10:20	17	6	VERY STIFF (10YR, 5/6) YELLOWISH BROWN, (10YR, 7/2) LIGHT GRAY MOTTLES, SILTY CLAY, SLIGHTLY PLASTIC, MOIST	CL	3.5	PID=1 ppm βΓ=100 cpm
2.5 3.0	112796 04/17/93 10:20	23	2	VERY STIFF (10YR, 5/6) YELLOWISH BROWN, (10YR, 7/1) LIGHT GRAY MOTTLES, SILTY CLAY, SLIGHTLY PLASTIC, MOIST	CL	4	PID=1 ppm βΓ=100 cpm
3.0 3.5	112797 04/17/93 10:30	27	6	SAA	CL	3	PID=1 ppm βΓ=100 cpm
3.5 4.0	112798 04/17/93 10:30	26	6	SAA	CL	3	PID=1 ppm βΓ=100 cpm
4.0 4.5	112799 04/17/93 10:30	28	2	SAA	CL	3	PID=1 ppm βΓ=100 cpm
4.5 5.0	112800 04/17/93 10:45	5	6	VERY STIFF (10YR, 5/8) YELLOWISH BROWN, SILTY CLAY, SLIGHTLY PLASTIC, MOIST	CL	2	PID=1 ppm βΓ=60 cpm
5.0 5.5	112801 04/17/93 10:45	9	6	SAA	CL	1.5	PID=1 ppm βΓ=60 cpm
5.5 6.0	112802 04/17/93 10:45	23	6	DENSE (10YR, 5/8) YELLOWISH BROWN, SILTY FINE SAND, LOW PLASTICITY, WET	ML	0	PID=1 ppm βΓ=60 cpm
6.0 6.5	112803 04/17/93 10:55	6	6	SAA	ML	0	PID=1 ppm βΓ=80 cpm

NOTES:

Driller: KEVIN MYERS, GEORGE BULLIT
Drilling Equipment: AUGER RIG

SAA = Same as Above
PID = Photoionization Detector
N/A = Not Applicable

1192

PROJECT NUMBER: 20.03.05	PROJECT NAME: CRU2 RI PHASE II FIELD INVESTIGATION	
BORING NUMBER: 11013	COORDINATES: NORTH 478009.63 EAST 1379539.72	DATE:17-APR-93
GROUND ELEVATION: 578.9	GWL: Depth 7 Date/Time 17-Apr-93 13:05	DATE STARTED: 17-APR-93
ENGINEER/GEOLOGIST: J REAGAN	Depth Date/Time	DATE COMPLETE: 17-APR-93

DRILLING METHOD: HOLLOW STEM AUGER

DEPTH	SAMPLE	DATE TIME	BLOWS ON SAMPLE	RECOVERY INCHES		USCS SYMBOL	TSF	REMARKS
6.5 7.0	112804	04/17/93 10:55	9	6	SAA	ML	0	PID=1 ppm BΓ=80 cpm
7.0 7.5	112805	04/17/93 10:55	17	2	SAA	ML	0	PID=1 ppm BΓ=80 cpm
7.5 8.0	112806	04/17/93 11:10	6	6	SAA	ML	0	PID=1 ppm BΓ=60 cpm
8.0 8.5	112807	04/17/93 11:10	9	6	SAA	ML	0	PID=1 ppm BΓ=60 cpm
8.5 9.0	112808	04/17/93 11:10	11	6	VERY STIFF (10YR, 6/6) BROWNISH YELLOW, (10YR, 6/1) GRAY MOTTLES, SILTY CLAY, MOIST, SLIGHTLY PLASTIC	CL	3.25	PID=1 ppm BΓ=60 cpm
9.0 9.5	112810	04/17/93 13:40	10	6	STIFF (2.5Y, 5/4) LIGHT OLIVE BROWN, (10YR, 6/1) GRAY MOTTLES, SILTY CLAY, SLIGHTLY PLASTIC, MOIST	CL	2	PID=1 ppm BΓ=60 cpm
9.5 10.0	112811	04/17/93 13:40	16	6	VERY STIFF (2.5Y, 5/4) LIGHT OLIVE BROWN, (2.5Y, 6/1) GRAY MOTTLES, SILTY CLAY, SLIGHTLY PLASTIC, MOIST	CL	2.5	PID=1 ppm BΓ=60 cpm
10.0 10.5		04/17/93 13:45	17	0	NO RECOVERY	N/A	N/A	

NOTES:

Driller: KEVIN MYERS, GEORGE BULLIT
Drilling Equipment: AUGER RIG

SAA = Same as Above
PID = Photoionization Detector
N/A = Not Applicable

1193

PROJECT NUMBER: 20.03.05	PROJECT NAME: CRU2 RI PHASE II FIELD INVESTIGATION	
BORING NUMBER: 11014	COORDINATES: NORTH 477968.94 EAST 1379698.75	DATE:30-MAR-93
GROUND ELEVATION: 579	GWL: Depth 5.5 Date/Time 30-Mar-93 14:00	DATE STARTED: 30-MAR-93
ENGINEER/GEOLOGIST: D O'BRIEN	Depth Date/Time	DATE COMPLETE: 30-MAR-93
DRILLING METHOD: HOLLOW STEM AUGER		

DEPTH	SAMPLE	DATE TIME	BLOWS ON	SAMPLE	RECOVERY	INCHES		USCS	SYMBOL	TSF	REMARKS
.5	110468	03/30/93 09:35	3		6		VERY STIFF (2.5Y, 5/6) LIGHT OLIVE BROWN, GRAVELLY CLAY WITH ORGANICS, LOW PLASTICITY, SLIGHTLY MOIST	CL		2.25	PID=0 ppm BΓ=100 cpm
1.0	110469	03/30/93 09:35	3		6		SAA	CL		2.25	PID=0 ppm BΓ=100 cpm
1.5	110470	03/30/93 09:35	5		6		SAA	CL		2.5	PID=0 ppm BΓ=100 cpm
2.0	110471	03/30/93 09:45	10		6		SAA, HARD	CL		4.5	PID=0 ppm BΓ=100 cpm
2.5	110472	03/30/93 09:45	18		6		SAA, VERY STIFF	CL		2.75	PID=0 ppm BΓ=100 cpm
3.0		03/30/93 09:45	24		0		NO RECOVERY	N/A		N/A	
3.5	110473	03/30/93 09:55	4		6		VERY STIFF (2.5Y, 5/6) LIGHT OLIVE BROWN, GRAVELLY CLAY, NO PLASTICITY, DRY	CL		2.25	PID=0 ppm BΓ=100 cpm
4.0	110474	03/30/93 09:55	9		4		STIFF (2.5Y, 6/6) OLIVE YELLOW, GRAVELLY CLAY, LOW PLASTICITY, MOIST	CL		1.25	PID=0 ppm BΓ=100 cpm
4.5		03/30/93 09:55	8		0		NO RECOVERY	N/A		N/A	
5.0	110475	03/30/93 10:50	4		6		STIFF (2.5Y, 5/6) LIGHT OLIVE BROWN, CLAY WITH GRAVEL, LOW PLASTICITY, WET	CL		1.25	PID=0 ppm BΓ=100 cpm
5.5	110476	03/30/93 10:50	9		6		SAA, MEDIUM STIFF	CL		.75	PID=0 ppm BΓ=100 cpm
6.0	110477	03/30/93 10:50	13		3		SAA, MEDIUM STIFF	CL		.75	PID=0 ppm BΓ=100 cpm
6.5	110478	03/30/93 10:55	5		6		STIFF (2.5Y, 5/6) LIGHT OLIVE BROWN CLAY WITH SILT, LOW PLASTICITY, WET	CL		1.25	PID=0 ppm BΓ=100 cpm

NOTES:

Boring Contractor: PENNSYLVANIA DRILLING
Driller: CRAIG CAULTER, KEVIN MYERS
Drilling Equipment: ACKER SENTRY

SAA = Same as Above
PID = Photoionization Detector
N/A = Not Applicable

1194

PROJECT NUMBER: 20.03.05	PROJECT NAME: CRU2 RI PHASE II FIELD INVESTIGATION	
BORING NUMBER: 11014	COORDINATES: NORTH 477968.94 EAST 1379698.75	DATE:30-MAR-93
GROUND ELEVATION: 579	GWL: Depth 5.5 Date/Time 30-Mar-93 14:00	DATE STARTED: 30-MAR-93
ENGINEER/GEOLOGIST: D O'BRIEN	Depth Date/Time	DATE COMPLETE: 30-MAR-93
DRILLING METHOD: HOLLOW STEM AUGER		

DEPTH	SAMPLE	DATE TIME	BLOWS ON SAMPLE	RECOVERY INCHES		USCS SYMBOL	TSF	REMARKS
6.5 7.0	110479 03/30/93 10:55	6	6	MEDIUM DENSE (2.5Y, 5/6) LIGHT OLIVE BROWN, CLAYEY SILT, WET		ML	N/A	PID=0 ppm BΓ=100 cpm
7.0 7.5	110480 03/30/93 10:55	8	6	SAA		ML	N/A	PID=0 ppm BΓ=100 cpm
7.5 8.0	110481 03/30/93 11:05	13	6	SAA		ML	N/A	PID=0 ppm BΓ=100 cpm
8.0 8.5	110482 03/30/93 11:05	13	6	SAA		ML	N/A	PID=0 ppm BΓ=100 cpm
8.5 9.0	110483 03/30/93 11:05	20	6	HARD (2.5Y, 5/6) LIGHT OLIVE BROWN, MOTTLED WITH GRAY CLAY, NO PLASTICITY, DRY		CL	4	PID=0 ppm BΓ=100 cpm
9.0 9.5	110484 03/30/93 14:15	7	6	STIFF (2.5Y, 5/6) LIGHT OLIVE BROWN, SILTLY CLAY, LITTLE GRAVEL, LOW PLASTICITY, MOIST		CL	1.25	PID=0 ppm BΓ=100 cpm
9.5 10.0	110485 03/30/93 14:15	9	6	SAA, MOIST TO DRY		CL	1.25	PID=0 ppm BΓ=100 cpm
10.0 10.5	110486 03/30/93 14:15	11	6	SAA, DRY		CL	1.5	PID=0 ppm BΓ=100 cpm

NOTES:

Boring Contractor: PENNSYLVANIA DRILLING
Driller: CRAIG CAULTER, KEVIN MYERS
Drilling Equipment: ACKER SENTRY

SAA = Same as Above
PID = Photoionization Detector
N/A = Not Applicable

PROJECT NUMBER: 602.20.03.05	PROJECT NAME:	
BORING NUMBER: 11015	COORDINATES: NORTH 477922.19 EAST 1379788.82	DATE:25-MAR-93
GROUND ELEVATION: 578.5	GWL: Depth 4 Date/Time 25-Mar-93 14:15	DATE STARTED: 25-MAR-93
ENGINEER/GEOLOGIST: MIKE WORLEY	Depth Date/Time	DATE COMPLETE: 25-MAR-93
DRILLING METHOD: AUGER		

DEPTH	SAMPLE	DATE TIME	BLOWS ON SAMPLE	RECOVERY INCHES		USCS SYMBOL	TSF	REMARKS
.5	110456	03/25/93 10:15	4	6	STIFF, (2.5Y, 4/2) DARK GRAYISH BROWN, CLAY, TRACE COBBLES AND ORGANICS, MEDIUM PLASTICITY, MOIST	CL	1.0	PID=0 ppm α=0 ppm βΓ=100 cpm
.5 1.0	110437	03/25/93 10:15	9	6	STIFF, (2.5Y, 4/3) OLIVE BROWN, CLAY, TRACE COBBLES, LOW PLASTICITY, MOIST	CL	2.0	PID=0 ppm α=0 ppm βΓ=100 cpm
1.0 1.5	110438	03/25/93 10:15	12	2	STIFF, (2.5Y, 5/4) LIGHT OLIVE BROWN, CLAY, TRACE LARGE COBBLES, MOIST, LOW PLASTICITY	CL	2.0	PID=0 ppm α=0 ppm βΓ=100 cpm
1.5 2.0	110439	03/25/93 10:20	18	6	STIFF, (2.5Y, 5/4) LIGHT OLIVE BROWN CLAY, TRACE GRAVEL, MOIST, LOW PLASTICITY	CL	2.0	PID=0 ppm α=0 ppm βΓ=100 cpm
2.0 2.5	110440	03/25/93 10:20	30	6	SAA	CL	2.0	PID=0 ppm α=0 ppm βΓ=100 cpm
2.5 3.0		03/25/93 10:20	39	N/A	NO RECOVERY (REFUSAL AFTER 2 ATTEMPTS)	N/A	N/A	
3.0 3.5	110441	03/25/93 10:40	7	6	VERY STIFF, (2.5Y, 5/6) LIGHT OLIVE BROWN CLAY, TRACE GRAVEL, MEDIUM PLASTICITY, SLIGHTLY MOIST	CL	2.5	PID=0 ppm α=0 ppm βΓ=50 cpm
3.5 4.0	110442	03/25/93 10:40	13	6	SAA	CL	2.5	PID=0 ppm α=0 ppm βΓ=50 cpm
4.0 4.5	110443	03/25/93 10:40	16	6	STIFF, SAA	CL	1.0	PID=0 ppm α=0 ppm βΓ=50 cpm
4.5 5.0	110444	03/25/93 10:50	6	6	STIFF, (2.5Y, 5/6) LIGHT OLIVE BROWN, SILTY CLAY, LOW PLASTICITY, SLIGHTLY MOIST	CL	1.0	PID=0 ppm α=0 ppm βΓ=50 cpm
5.0 5.5	110445	03/25/93 10:50	10	6	STIFF, (2.5Y, 5/6) LIGHT OLIVE BROWN SILTY CLAY, SLIGHTLY MOIST, LOW PLASTICITY	CL	1.0	PID=0 ppm α=0 ppm βΓ=50 cpm
5.5 6.0	110446	03/25/93 10:50	17	6	SAA	CL	1.0	PID=0 ppm α=0 ppm βΓ=50 cpm
6.0 6.5	110447	03/25/93 11:00	9	6	STIFF, (2.5Y, 5/6) GRAY MOTTLED LIGHT OLIVE BROWN, SILTY CLAY, LOW PLASTICITY, MOIST	CL	1.0	PID=0 ppm α=0 ppm βΓ=50 cpm

NOTES:

Boring Contractor: PENNSYLVANIA DRILLING CO.
Driller: CRAIG COULTER
Drilling Equipment: ACKER SENTRY

SAA = Same as Above
PID = Photoionization Detector
N/A = Not Applicable

1196

PROJECT NUMBER: 602.20.03.05	PROJECT NAME:	
BORING NUMBER: 11015	COORDINATES: NORTH 477922.19 EAST 1379788.82	DATE:25-MAR-93
GROUND ELEVATION: 578.5	GWL: Depth 4 Date/Time 25-Mar-93 14:15	DATE STARTED: 25-MAR-93
ENGINEER/GEOLOGIST: MIKE WORLEY	Depth Date/Time	DATE COMPLETE: 25-MAR-93
DRILLING METHOD: AUGER		

DEPTH	SAMPLE	DATA TIME	BLOWS ON SAMPLE	RECOVERY	INCHES		USCS SYMBOL	TSF	REMARKS
6.5 7.0	110448 03/25/93 11:00		11	6		SAA	CL	1.5	PID=0 ppm α=0 ppm βΓ=50 cpm
7.0 7.5	110449 03/25/93 11:00		14	6		VERY STIFF, SAA	CL	2.5	PID=0 ppm α=0 ppm βΓ=50 cpm
7.5 8.0	110450 03/25/93 13:30		10	6		VERY STIFF, (2.5Y, 5/4) LIGHT OLIVE BROWN, CLAYEY SILT, LOW PLASTICITY, WET	ML	2.5	PID=0 ppm α=0 ppm βΓ=50 cpm
8.0 8.5	110451 03/25/93 13:30		14	6		SAA	ML	2.5	PID=0 ppm α=0 ppm βΓ=50 cpm
8.5 9.0	110452 03/25/93 13:30		19	6		SAA	ML	2.5	PID=0 ppm α=0 ppm βΓ=80 cpm
9.0 9.5	110453 03/25/93 14:40		7	6		STIFF, (2.5Y, 5/4) GRAY MOTTLED LIGHT OLIVE BROWN SILTY CLAY, LOW PLASTICITY, MOIST	CL	2.0	PID=0 ppm α=0 ppm βΓ=60 cpm
9.5 10.0	110454 03/25/93 14:40		12	6		SAA	CL	2.0	PID=0 ppm α=0 ppm βΓ=60 cpm
10.0 10.5	110455 03/25/93 14:40		18	3		STIFF, (2.5Y, 5/4) GRAY MOTTLED LIGHT OLIVE BROWN, SILTY CLAY, LOW PLASTICITY, MOIST	CL	2.0	PID=0 ppm α=0 ppm βΓ=60 cpm
10.5 11.0	110456 03/25/93 14:45		18	6		VERY STIFF, (2.5Y, 5/4) GRAY MOTTLED LIGHT OLIVE BROWN SILTY CLAY, LOW PLASTICITY, MOIST	CL	3.5	PID=0 ppm α=0 ppm βΓ=50 cpm
11.0 11.5	110457 03/25/93 14:45		26	6		VERY STIFF, (2.5Y, 5/2) GRAYISH BROWN CLAYEY SILT, LOW PLASTICITY, MOIST	ML	3.5	PID=0 ppm α=0 ppm βΓ=50 cpm
11.5 12.0	110458 03/25/93 14:45		32	6		SAA	ML	3.0	PID=0 ppm α=0 ppm βΓ=50 cpm
12.0 12.5	110459 03/25/93 15:45		19	6		VERY STIFF, (2.5Y, 5/3) LIGHT OLIVE BROWN, SILTY CLAY, MEDIUM PLASTICITY, MOIST	CL	3.0	PID=0 ppm α=0 ppm βΓ=50 cpm
12.5 13.0	110460 03/25/93 15:45		24	6		VERY STIFF, (2.5Y, 5/3) LIGHT OLIVE BROWN CLAY, MEDIUM PLASTICITY, MOIST	CL	3.0	PID=0 ppm α=0 ppm βΓ=50 cpm

NOTES:

Boring Contractor: PENNSYLVANIA DRILLING CO.
Driller: CRAIG COULTER
Drilling Equipment: ACKER SENTRY

SAA = Same as Above
PID = Photoionization Detector
N/A = Not Applicable

1197

PROJECT NUMBER: 602.20.03.05	PROJECT NAME:	
BORING NUMBER: 11015	COORDINATES: NORTH 477922.19 EAST 1379788.82	DATE:25-MAR-93
GROUND ELEVATION: 578.5	GWL: Depth 4 Date/Time 25-Mar-93 14:15	DATE STARTED: 25-MAR-93
ENGINEER/GEOLOGIST: MIKE WORLEY	Depth Date/Time	DATE COMPLETE: 25-MAR-93
DRILLING METHOD: AUGER		

DEPTH	SAMPLE	DATE TIME	BLOWS ON SAMPLE	RECOVERY INCHES		USCS SYMBOL	TSF	REMARKS
13.0 13.5	110461 03/25/93 15:45		36	6	SAA	CL	3.0	PID=0 ppm α=0 ppm βΓ=50 cpm
13.5 14.0	110462 03/25/93 16:00		16	6	VERY DENSE, (2.5Y, N5/) GRAY SILT, TRACE FINE SAND, NON-PLASTIC, MOIST	SM	N/A	PID=0 ppm α=0 ppm βΓ=50 cpm
14.0 14.5	110463 03/25/93 16:00		27	6	VERY DENSE, (2.5Y, N5/) GRAY SILTY FINE SAND, MOIST	SM	N/A	PID=0 ppm α=0 ppm βΓ=50 cpm
14.5 15.0	110464 03/25/93 16:00		38	6	VERY DENSE, (2.5Y, N5/) GRAY SILT, TRACE FINE SAND, MOIST	SM	N/A	PID=0 ppm α=0 ppm βΓ=50 cpm

NOTES:

Boring Contractor: PENNSYLVANIA DRILLING CO.
Driller: CRAIG COULTER
Drilling Equipment: ACKER SENTRY

SAA = Same as Above
PID = Photoionization Detector
N/A = Not Applicable

1198

PROJECT NUMBER: 20.03.05	PROJECT NAME: CRU2 RI PHASE II FIELD INVESTIGATION	
BORING NUMBER: 11016	COORDINATES: NORTH 477811.21 EAST 1379837.73	DATE:18-APR-93
GROUND ELEVATION: 578.2	GWL: Depth Date/Time	DATE STARTED: 18-APR-93
ENGINEER/GEOLOGIST: J REAGAN	Depth Date/Time	DATE COMPLETE: 18-APR-93
DRILLING METHOD: HOLLOW STEM		

DEPTH	SAMPLE	DATE TIME	BLOWS ON SAMPLE	RECOVERY	INCHES		USCS SYMBOL	TSF	REMARKS
.5	112812	04/18/93 10:00	2	6		MEDIUM DENSE, (10YR, 3/2) VERY DARK GRAYISH BROWN, SILTY, VERY FINE SAND, LOW PLASTICITY, MOIST	ML	N/A	PID=0 ppm BΓ=40 cpm
.5 1.0	112813	04/18/93 10:00	7	6		STIFF, (2.5Y, 5/4) LIGHT OLIVE BROWN, SILTY CLAY, LOW PLASTICITY, MOIST	CL	2	PID=0 ppm BΓ=40 cpm
1.0 1.5		04/18/93 00:00	8	0		NO RECOVERY	N/A	N/A	
1.5 2.0	112814	04/18/93 10:10	18	6		STIFF, (2.5Y, 5/4) LIGHT OLIVE BROWN, SILTY CLAY, LOW PLASTICITY, MOIST	CL	2	PID=0 ppm BΓ=60 cpm
2.0 2.5	112815	04/18/93 10:10	26	6		VERY STIFF, (2.5Y, 5/4) LIGHT OLIVE BROWN, (2.5Y, 6/1) GRAY MOTTLES, SILTY CLAY, LOW PLASTICITY, MOIST	CL	2.5	PID=0 ppm BΓ=60 cpm
2.5 3.0		03/30/93 09:45	24	0		NO RECOVERY	N/A	N/A	
2.5 3.0	112816	04/18/93 10:10	32	2		SAA	CL	2.5	PID=0 ppm BΓ=60 cpm
3.0 3.5	112817	04/18/93 10:30	21	6		VERY STIFF, (2.5Y, 5/4) LIGHT OLIVE BROWN, (2.5Y, 7/1) LIGHT GRAY MOTTLES, SILTY CLAY, LOW PLASTICITY, MOIST	CL	3.5	PID=0 ppm BΓ=40 cpm
3.5 4.0	112818	04/18/93 10:30	26	6		SAA	CL	2	PID=0 ppm BΓ=40 cpm
4.0 4.5	112819	04/18/93 10:30	24	2		SAA	CL	2.5	PID=0 ppm BΓ=40 cpm
4.5 5.0	112820	04/18/93 10:45	3	6		MEDIUM STIFF, (2.5Y, 5/4) LIGHT OLIVE BROWN, SILTY CLAY, LOW PLASTICITY, MOIST	CL	1	PID=0 ppm BΓ=40 cpm
5.0 5.5	112821	04/18/93 10:45	7	6		SAA	CL	1.5	PID=0 ppm BΓ=40 cpm
5.5 6.0	112822	04/18/93 10:45	11	4		MEDIUM DENSE, (2.5Y, 5/6) LIGHT OLIVE BROWN, (2.5Y, 6/1) GRAY MOTTLES, SILTY VERY FINE SAND, LOW PLASTICITY, MOIST	ML	N/A	PID=0 ppm BΓ=40 cpm

NOTES:

Boring Contractor: PENNSYLVANIA DRILLING
Driller: KEVIN MYERS, GEORGE BULLITT
Drilling Equipment: ACKER SOIL SENTRY

SAA = Same as Above
PID = Photoionization Detector
N/A = Not Applicable

1199

PROJECT NUMBER: 20.03.05	PROJECT NAME: CRU2 RI PHASE II FIELD INVESTIGATION	
BORING NUMBER: 11016	COORDINATES: NORTH 477811.21 EAST 1379837.73	DATE:18-APR-93
GROUND ELEVATION: 578.2	GWL: Depth Date/Time	DATE STARTED: 18-APR-93
ENGINEER/GEOLOGIST: J REAGAN	Depth Date/Time	DATE COMPLETE: 18-APR-93
DRILLING METHOD: HOLLOW STEM		

DEPTH	SAMPLE	DATE TIME	BLOWS ON SAMPLE	RECOVERY INCHES		USCS SYMBOL	TSF	REMARKS
6.0 6.5	112823 04/18/93 11:00	3	6	MEDIUM DENSE, (2.5Y, 5/6) LIGHT OLIVE BROWN, SILTY VERY FINE SAND, LOW PLASTICITY, MOIST		ML	N/A	PID=0 ppm BΓ=40 cpm
6.5 7.0	112824 04/18/93 11:00	14	6	VERY STIFF, (2.5Y, 5/6) LIGHT OLIVE BROWN, (2.5Y, 6/1) GRAY MOTTLES, SILTY CLAY, LOW PLASTICITY, MOIST		CL	3	PID=0 ppm BΓ=40 cpm
7.0 7.5	112825 04/18/93 11:00	12	4	MEDIUM DENSE, (2.5Y, 5/6) LIGHT OLIVE BROWN, (2.5Y, 6/1) GRAY MOTTLES, SILTY VERY FINE SAND, LOW PLASTICITY, VERY MOIST		ML	N/A	PID=0 ppm BΓ=40 cpm
7.5 8.0	112826 04/18/93 11:10	5	6	MEDIUM DENSE, (2.5Y, 5/6) LIGHT OLIVE BROWN, (2.5Y, 6/1) GRAY MOTTLES, SILTY VERY FINE SAND, LOW PLASTICITY, WET		ML	N/A	PID=0 ppm BΓ=60 cpm
8.0 8.5	112827 04/18/93 11:10	7	6	SAA		ML	N/A	PID=0 ppm BΓ=60 cpm
8.5 9.0	112828 04/18/93 11:10	13	6	VERY STIFF, (2.5Y, 5/6) LIGHT OLIVE BROWN, (2.5Y, 6/1) GRAY MOTTLES, SILTY CLAY, SLIGHTLY PLASTICITY, MOIST		CL	3	PID=0 ppm BΓ=60 cpm
9.0 9.5	112830 04/18/93 13:40	18	6	STIFF, (2.5Y, 5/4) LIGHT OLIVE BROWN, (2.5Y, 5/1) GRAY MOTTLES, SILTY CLAY, SLIGHTLY PLASTIC, MOIST		CL	2	PID=0 ppm BΓ=60 cpm
9.5 10.0	112831 04/18/93 13:40	20	6	SAA		CL	2.5	PID=0 ppm BΓ=60 cpm
10.0 10.5	112832 04/18/93 13:40	23	6	VERY STIFF, (2.5Y, 5/4) LIGHT OLIVE BROWN, (2.5Y, 5/1) GRAY AND (2.5Y, 5/6) LIGHT OLIVE BROWN MOTTLES, SILTY CLAY, SLIGHTLY PLASTIC, MOIST		CL	3	PID=0 ppm BΓ=60 cpm

NOTES:

Boring Contractor: PENNSYLVANIA DRILLING
Driller: KEVIN MYERS, GEORGE BULLITT
Drilling Equipment: ACKER SOIL SENTRY

SAA = Same as Above
PID = Photoionization Detector
N/A = Not Applicable

1200

PROJECT NUMBER: 20.03.05	PROJECT NAME: CRU2 RI PHASE II FIELD INVESTIGATION	
BORING NUMBER: 11017	COORDINATES: NORTH 477542.65 EAST 1379578.97	DATE:01-APR-93
GROUND ELEVATION: 575.7	GWL: Depth Date/Time	DATE STARTED: 01-APR-93
ENGINEER/GEOLOGIST: D O'BRIEN	Depth Date/Time	DATE COMPLETE: 01-APR-93
DRILLING METHOD: HOLLOW STEM AUGER		

DEPTH	SAMPLE	DATE TIME	BLOWS ON	SAMPLE	RECOVERY	INCHES		USCS SYMBOL	TSF	REMARKS
.5	110488	04/01/93 09:45	3		6		VERY STIFF, (2.5Y, 5/4) LIGHT OLIVE BROWN, GRAVELLY CLAY, LOW PLASTICITY, MOIST	CL	3.5	PID=0 ppm BΓ=100 cpm
1.0		04/01/93 00:00	6		0		NO RECOVERY	N/A	N/A	
1.5		04/01/93 00:00	13		0		NO RECOVERY	N/A	N/A	
2.0	110489	04/01/93 09:50	13		6		HARD, (2.5Y, 5/4) LIGHT OLIVE BROWN, GRAVELLY CLAY, NO PLASTICITY, DRY	CL	4.5	PID=0 ppm BΓ=80 cpm
2.5	110490	04/01/93 09:50	24		4		SAA, VERY STIFF	CL	2.5	PID=0 ppm BΓ=80 cpm
3.0		04/01/93 00:00	24		0		NO RECOVERY	N/A	N/A	
3.5	110491	04/01/93 10:10	20		6		HARD, (2.5Y, 5/6) LIGHT OLIVE BROWN, GRAVELLY CLAY, NO PLASTICITY, DRY	CL	4	PID=0 ppm BΓ=80 cpm
4.0	110492	04/01/93 10:10	30		4		SAA	CL	4	PID=0 ppm BΓ=80 cpm
4.5		04/01/93 00:00	31		0		NO RECOVERY	N/A	N/A	
5.0	110493	04/01/93 10:40	4		6		VERY STIFF, (2.5Y, 5/6) LIGHT OLIVE BROWN, GRAVELLY CLAY SOME ORGANICSN NO PLASTICITY, DRY	CL	2.5	PID=0 ppm BΓ=80 cpm
5.5	110494	04/01/93 10:40	6		3		SAA	CL	2.75	PID=0 ppm BΓ=80 cpm
6.0		04/01/93 00:00	12		0		NO RECOVERY	N/A	N/A	
6.5	110495	04/01/93 10:55	12		6		VERY STIFF, (2.5Y, 6/8) OLIVE YELLOW, GRAVELLY CLAY W/ORGANICS, NO PLASTICITY, DRY	CL	3	PID=0 ppm BΓ=80 cpm

NOTES:

Boring Contractor: PENNSYLVANIA DRILLING CO.
Driller: KEVIN MYERS, DONNY ARTHUR
Drilling Equipment: ACKER SENTRY

SAA = Same as Above
PID = Photoionization Detector
N/A = Not Applicable

1201

PROJECT NUMBER: 20.03.05	PROJECT NAME: CRU2 RI PHASE II FIELD INVESTIGATION	
BORING NUMBER: 11017	COORDINATES: NORTH 477542.65 EAST 1379578.97	DATE:01-APR-93
GROUND ELEVATION: 575.7	GWL: Depth Date/Time	DATE STARTED: 01-APR-93
ENGINEER/GEOLOGIST: D O'BRIEN	Depth Date/Time	DATE COMPLETE: 01-APR-93
DRILLING METHOD: HOLLOW STEM AUGER		

DEPTH	SAMPLE	DATE TIME	BLOWS ON	SAMPLE	RECOVERY	INCHES		USCS SYMBOL	TSF	REMARKS
6.5 7.0	110496 04/01/93 10:55		32		6		SAA	CL	3.5	PID=0 ppm BΓ=80 cpm
7.0 7.5	110497 04/01/93 10:55		45		6		SAA, HARD	CL	4	PID=0 ppm BΓ=80 cpm
7.5 8.0	110498 04/01/93 11:10		9		6		SAA	CL	4	PID=0 ppm BΓ=80 cpm
8.0 8.5	110499 04/01/93 11:10		12		6		SAA	CL	4	PID=0 ppm BΓ=80 cpm
8.5 9.0	04/01/93 11:10		19		0		NO RECOVERY	N/A	N/A	
9.0 9.5	110500 04/01/93 13:15		6		6		VERY STIFF, (2.5Y, 6/8) OLIVE YELLOW, MOTTLES WITH GRAY, SILTY, CLAY, NO PLASTICITY, DRY	CL	3.25	PID=0 ppm BΓ=60 cpm
9.5 10.0	110501 04/01/93 13:15		12		5		SAA	CL	2.5	PID=0 ppm BΓ=60 cpm
10.0 10.5	04/01/93 00:00		34		0		NO RECOVERY	N/A	N/A	
10.5 11.0	110502 04/01/93 13:30		14		6		VERY STIFF, (2.5Y, 6/8) OLIVE YELLOW, SILTY CLAY, NO PLASTICITY, DRY	CL	2.5	PID=0 ppm BΓ=60 cpm
11.0 11.5	110503 04/01/93 13:30		21		6		SAA	CL	2.75	PID=0 ppm BΓ=60 cpm
11.5 12.0	110504 04/01/93 13:30		32		6		VERY DENSE, (2.5Y, 6/8) OLIVE YELLOW, CLAYEY SILT, SLIGHTLY MOIST	ML	N/A	PID=0 ppm BΓ=60 cpm
12.0 12.5	110505 04/01/93 13:50		15		6		DENSE, (2.5Y, 6/8) OLIVE YELLOW, SILT, WET	ML	N/A	PID=0 ppm BΓ=40 cpm
12.5 13.0	04/01/93 00:00		18		0		NO RECOVERY	N/A	N/A	

NOTES:

Boring Contractor: PENNSYLVANIA DRILLING CO.
Driller: KEVIN MYERS, DONNY ARTHUR
Drilling Equipment: ACKER SENTRY

SAA = Same as Above
PID = Photoionization Detector
N/A = Not Applicable

1202

PROJECT NUMBER: 20.03.05	PROJECT NAME: CRU2 RI PHASE II FIELD INVESTIGATION	
BORING NUMBER: 11017	COORDINATES: NORTH 477542.65 EAST 1379578.97	DATE:01-APR-93
GROUND ELEVATION: 575.7	GWL: Depth Date/Time	DATE STARTED: 01-APR-93
ENGINEER/GEOLOGIST: D O'BRIEN	Depth Date/Time	DATE COMPLETE: 01-APR-93
DRILLING METHOD: HOLLOW STEM AUGER		

DEPTH	SAMPLE	DATE TIME	BLOWS ON SAMPLE	RECOVERY INCHES		USCS SYMBOL	TSF	REMARKS
13.0 13.5		04/01/93 00:00	24	0	NO RECOVERY	N/A	N/A	
13.5 14.0	110506	04/01/93 14:10	12	6	MEDIUM DENSE, (2.5Y, 6/8) OLIVE YELLOW, SILT, WET	ML	N/A	PID=0 ppm BΓ=40 cpm
14.0 14.5	110507	04/01/93 14:10	8	4	SAA	ML	N/A	PID=0 ppm BΓ=40 cpm
14.5 15.0		04/01/93 00:00	18	0	NO RECOVERY	N/A	N/A	
15.0 15.5	110508	04/01/93 14:20	23	6	DENSE, (2.5Y, 6/8) OLIVE YELLOW, SILT, MOIST	ML	N/A	PID=0 ppm BΓ=40 cpm
15.5 16.0	110509	04/01/93 14:20	24	5	VERY STIFF, (2.5Y, 5/1) GRAY, GRAVELLY CLAY, NO PLASTICITY, DRY	CL	3.5	PID=0 ppm BΓ=40 cpm
16.0 16.5		04/01/93 00:00	25	0	NO RECOVERY	N/A	N/A	
16.5 17.0	110510	04/01/93 15:15	13	5	HARD, (2.5Y, 5/1) GRAY, GRAVELLY CLAY, NO PLASTICITY, DRY	CL	4	PID=0 ppm BΓ=60 cpm
17.0 17.5		04/01/93 00:00	24	0	NO RECOVERY	N/A	N/A	
17.5 18.0		04/01/93 00:00	35	0	NO RECOVERY	N/A	N/A	

NOTES:

Boring Contractor: PENNSYLVANIA DRILLING CO.
Driller: KEVIN MYERS, DONNY ARTHUR
Drilling Equipment: ACKER SENTRY

SAA = Same as Above
PID = Photoionization Detector
N/A = Not Applicable

1203

PROJECT NUMBER: 20.03.05	PROJECT NAME: CRU2 RI PHASE II FIELD INVESTIGATION	
BORING NUMBER: 11018	COORDINATES: NORTH 477180.49 EAST 1379571.13	DATE:16-APR-93
GROUND ELEVATION: 544.4	GWL: Depth Date/Time	DATE STARTED: 16-APR-93
ENGINEER/GEOLOGIST: J BOYER	Depth Date/Time	DATE COMPLETE: 17-APR-93
DRILLING METHOD: AUGER		

DEPTH	SAMPLE DATE TIME	BLOWS ON SAMPLE	RECOVERY INCHES		USCS SYMBOL	TSF	REMARKS
.5	112595 04/16/93 10:15	2	6	MEDIUM DENSE, (10YR, 2/1) BLACK, SILTY, VERY FINE SAND, LOW PLASTICITY, WET.	ML	N/A	PID=1 ppm βΓ=50 cpm
1.0	112596 04/16/93 10:15	7	6	MEDIUM DENSE, (2.5Y, 4/4) OLIVE BROWN, SILTY VERY FINE SAND, WET, LOW PLASTICITY	ML	N/A	PID=1 ppm βΓ=50 cpm
1.5	112597 04/16/93 10:15	10	6	STIFF (2.5Y, 4/4) OLIVE BROWN, SILTY CLAY, WET, SLIGHTLY PLASTIC, GRAVELS	CL	2	PID=1 ppm βΓ=50 cpm
2.0	112598 04/16/93 10:25	7	6	SAA	CL	2	PID=1 ppm βΓ=50 cpm
2.5	112599 04/16/93 10:25	12	4	SAA	CL	2	PID=1 ppm βΓ=50 cpm
3.0	04/16/93 00:00	24	0	NO RECOVERY	N/A	N/A	
3.5	112600 04/16/93 13:45	2	6	STIFF, (2.5Y, 4/4) OLIVE BROWN, SILTY CLAY, WET, SLIGHTLY PLASTIC	CL	2	PID=1 ppm βΓ=45 cpm
4.0	112601 04/16/93 13:45	11	6	LOOSE, (10YR, 6/3) PALE BROWN, SILTY GRAVEL, DRY, CEMENTED	GM	N/A	PID=1 ppm βΓ=45 cpm
4.5	112602 04/16/93 13:45	10	2	LOOSE, (10YR, 4/4) DARK YELLOWISH BROWN, MOIST, POORLY GRADED SAND	N/A	N/A	PID=1 ppm βΓ=45 cpm
5.0	112603 04/16/93 14:10	1	6	SAA	SP	N/A	PID=1 ppm βΓ=55 cpm
5.5	112604 04/16/93 14:10	10	6	SAA	SP	N/A	PID=1 ppm βΓ=55 cpm
6.0	04/16/93 00:00	17	0	NO RECOVERY	N/A	N/A	PID=1 ppm βΓ=55 cpm
6.5	112605 04/16/93 14:30	22	6	DENSE, SAA	SP	N/A	PID=1 ppm βΓ=50 cpm

NOTES:

Driller: JOE RAAB, ROGER DAVIS
Drilling Equipment: CME-45

SAA = Same as Above
PID = Photoionization Detector
N/A = Not Applicable

1204

5174 02/02/94 17:03

PROJECT NUMBER: 20.03.05	PROJECT NAME: CRU2 RI PHASE II FIELD INVESTIGATION	
BORING NUMBER: 11018	COORDINATES: NORTH 477180.49 EAST 1379571.13	DATE:16-APR-93
GROUND ELEVATION: 544.4	GWL: Depth Date/Time	DATE STARTED: 16-APR-93
ENGINEER/GEOLOGIST: J BOYER	Depth Date/Time	DATE COMPLETE: 17-APR-93

DRILLING METHOD: AUGER

DEPTH	SAMPLE DATE TIME	BLOWS ON SAMPLE	RECOVERY INCHES		USCS SYMBOL	TSF	REMARKS
6.5 7.0	112606 04/16/93 14:30	26	6	DENSE, SAA	SP	N/A	PID=1 ppm BΓ=50 cpm
7.0 7.5	112607 04/16/93 14:30	31	4	DENSE, (10YR, 4/4) DARK YELLOWISH BROWN, GRAVELLY SAND, MOIST	SP	N/A	PID=1 ppm BΓ=50 cpm
7.5 8.0	112608 04/16/93 14:45	17	6	MEDIUM DENSE, (10YR, 4/4) DARK YELLOW BROWN, POORLY GRADED SAND MOIST	SP	N/A	PID=1 ppm BΓ=45 cpm
8.0 8.5	112609 04/16/93 14:45	24	6	MEDIUM DENSE, (10YR, 5/3) BROWN, POORLY GRADED SAND, MOIST	SP	N/A	PID=1 ppm BΓ=45 cpm
8.5 9.0	04/16/93 00:00	32	0	NO RECOVERY	N/A	N/A	PID=1 ppm BΓ=45 cpm
9.0 9.5	112610 04/16/93 15:00	7	6	LOOSE, (10YR, 4/4) DARK YELLOWISH BROWN, POORLY GRADING SAND, MOIST	SP	N/A	PID=1 ppm BΓ=40 cpm
9.5 10.0	112611 04/16/93 15:00	22	6	MEDIUM DENSE, (10YR 4/4) DARK YELLOWISH BROWN, POORLY GRADED SAND, MOIST	SP	N/A	PID=1 ppm BΓ=40 cpm
10.0 10.5	112612 04/16/93 15:00	35	2	DENSE, (10YR, 4/4) DARK YELLOWISH BROWN, POORLY GRADED SAND, MOIST	SP	N/A	PID=1 ppm BΓ=40 cpm
10.5 11.0	112613 04/16/93 15:30	25	6	DENSES, (10YR, 4/4) DARK YELLOWISH BROWN, POORLY GRADED SAND, MOIST	SP	N/A	PID=1 ppm BΓ=50 cpm
11.0 11.5	112614 04/16/93 15:30	32	6	DENSE, (10YR, 4/4) DARK YELLOWISH BROWN, POORLY GRADED SAND, MOIST	SP	N/A	PID=1 ppm BΓ=50 cpm
11.5 12.0	112615 04/16/93 15:30	57	6	VERY DENSE, (10YR, 4/4) DARK YELLOWISH BROWN, POORLY GRADED SAND, MOIST	SP	N/A	PID=1 ppm BΓ=50 cpm
12.0 12.5	112616 04/17/93 09:30	8	6	VERY DENSE, (10YR, 4/4) DARK YELLOWISH BROWN, POORLY GRADED SAND, W/GRAVEL, MOIST	SP	N/A	PID=1.2 ppm BΓ=45 cpm
12.5 13.0	112617 04/17/93 09:30	21	6	SAA	SP	N/A	PID=1.2 ppm BΓ=45 cpm

NOTES:

Driller: JOE RAAB, ROGER DAVIS
Drilling Equipment: CME-45

SAA = Same as Above
PID = Photoionization Detector
N/A = Not Applicable

1205

PROJECT NUMBER: 20.03.05	PROJECT NAME: CRU2 RI PHASE II FIELD INVESTIGATION	
BORING NUMBER: 11018	COORDINATES: NORTH 477180.49 EAST 1379571.13	DATE:16-APR-93
GROUND ELEVATION: 544.4	GWL: Depth Date/Time	DATE STARTED: 16-APR-93
ENGINEER/GEOLOGIST: J BOYER	Depth Date/Time	DATE COMPLETE: 17-APR-93
DRILLING METHOD: AUGER		

DEPTH	SAMPLE	DATE TIME	BLOWS ON SAMPLE	RECOVERY INCHES		USCS SYMBOL	TSF	REMARKS
13.0 13.5	112618 04/17/93 09:30	35	4	SAA		N/A	N/A	PID=1.2 ppm βΓ=45 cpm
13.5 14.0	112619 04/17/93 09:45	20	6	VERY DENSE, (10YR, 4/6) DARK YELLOWISH BROWN, POORLY GRADED SAND WITH GRAVEL, MOIST		SP	N/A	PID=1 ppm βΓ=50 cpm
14.0 14.5	112620 04/17/93 09:45	28	6	SAA		SP	N/A	PID=1 ppm βΓ=50 cpm
14.5 15.0	112621 04/17/93 09:45	30	6	SAA		SP	N/A	PID=1 ppm βΓ=50 cpm
15.0 15.5	112622 04/17/93 10:00	12	6	VERY DENSE, (10YR, 4/6) DARK YELLOWISH BROWN, POORLY GRADED SAND W/GRAVEL, TRACE SILT, MOIST		SP	N/A	PID=1.5 ppm βΓ=25 cpm
15.5 16.0	112623 04/17/93 10:00	47	6	SAA		SP	N/A	PID=1.5 ppm βΓ=25 cpm
16.0 16.5	112624 04/17/93 10:00	28	4	SAA		SP	N/A	PID=1.5 ppm βΓ=25 cpm
16.5 17.0	112625 04/17/93 10:10	22	6	VERY DENSE, (10YR, 4/6) DARK YELLOWISH BROWN, POORLY GRADED GRAVEL WITH SAND, MOIST		GP	N/A	PID=1.2 ppm βΓ=50 cpm
17.0 17.5	112626 04/17/93 10:10	38	6	SAA		GP	N/A	PID=1.2 ppm βΓ=50 cpm
17.5 18.0	112627 04/17/93 10:10	51	3	SAA		GP	N/A	PID=1.2 ppm βΓ=50 cpm
18.0 18.5	112628 04/17/93 10:25	8	6	MEDIUM DENSE, (10YR, 4/6) DARK YELLOWISH BROWN, POORLY GRADED WITH GRAVEL, MOIST		SP	N/A	PID=1.3 ppm βΓ=40 cpm
18.5 19.0	112629 04/17/93 10:25	11	6	SAA		SP	N/A	PID=1.3 ppm βΓ=40 cpm
19.0 19.5	04/17/93 00:00	15	0	NO RECOVERY		N/A	N/A	PID=1.3 ppm βΓ=40 cpm

NOTES:

Driller: JOE RAAB, ROGER DAVIS
Drilling Equipment: CME-45

SAA = Same as Above
PID = Photoionization Detector
N/A = Not Applicable

PROJECT NUMBER: 20.03.05	PROJECT NAME: CRU2 RI PHASE II FIELD INVESTIGATION	
BORING NUMBER: 11018	COORDINATES: NORTH 477180.49 EAST 1379571.13	DATE:16-APR-93
GROUND ELEVATION: 544.4	GWL: Depth Date/Time	DATE STARTED: 16-APR-93
ENGINEER/GEOLOGIST: J BOYER	Depth Date/Time	DATE COMPLETE: 17-APR-93
DRILLING METHOD: AUGER		

DEPTH	SAMPLE	DATE TIME	BLOWS ON SAMPLE	RECOVERY INCHES		USCS SYMBOL	TSF	REMARKS
19.5 20.0	112630	04/17/93 10:40	9	6	DENSE, (10YR, 4/6) DARK YELLOWISH BROWN, POORLY GRADED SAND WITH GRAVEL, WET	SP	N/A	PID=2.7 ppm BΓ=50 cpm
20.0 20.5	112631	04/17/93 10:40	18	6	SAA	SP	N/A	PID=2.7 ppm BΓ=50 cpm
20.5 21.0		04/17/93 00:00	18	0	NO RECOVERY	N/A	N/A	PID=2.7 ppm BΓ=50 cpm
21.0 24.0	112634	04/17/93 14:50	N/A	N/A	HYDROPUNCH DESTRUCTIVE DRILLING	N/A	N/A	
24.0 24.5	112635	04/17/93 15:00	8	6	MEDIUM DENSE, (10YR, 4/4) DARK YELLOWISH BROWN, POORLLY GRADED SAND WET	SP	N/A	PID=.9 ppm BΓ=50 cpm
24.5 25.0	112636	04/17/93 15:00	13	6	SAA	SP	N/A	PID=.9 ppm BΓ=50 cpm
25.0 25.5		04/17/93 00:00	17	0	NO RECOVERY	N/A	N/A	

NOTES:

Driller: JOE RAAB, ROGER DAVIS
Drilling Equipment: CME-45

SAA = Same as Above
PID = Photoionization Detector
N/A = Not Applicable

1207

PROJECT NUMBER: 20.03.05	PROJECT NAME: CRU2 RI PHASE II FIELD INVESTIGATION	
BORING NUMBER: 11019	COORDINATES: NORTH 477180.84 EAST 1379641.57	DATE:11-MAY-93
GROUND ELEVATION: 544.69	GWL: Depth Date/Time	DATE STARTED: 11-MAY-93
ENGINEER/GEOLOGIST: J REAGAN	Depth Date/Time	DATE COMPLETE: 11-MAY-93
DRILLING METHOD: HOLLOW STEM AUGER		

DEPTH	SAMPLE	DATE TIME	BLOWS ON SAMPLE	RECOVERY INCHES		USCS SYMBOL	TSF	REMARKS
20.0		05/11/93 15:00	N/A	N/A	AUGER 1'-20'	N/A	N/A	
20.0 20.5	113047	05/11/93 15:00	8	6	DENSE (10YR, 4/3) BROWN POORLY GRADED SAND, LOW PLASTICITY, WET	SP	N/A	PID=0 ppm α=0 ppm βΓ=60 cpm
20.5 21.0	113048	05/11/93 15:00	15	6	SAA	SP	N/A	PID=0 ppm α=0 ppm βΓ=60 cpm
21.0 21.5	113049	05/11/93 15:00	19	6	SAA	SP	N/A	PID=0 ppm α=0 ppm βΓ=60 cpm

NOTES:

Boring Contractor: PENNSYLVANIA DRILLING
Driller: M WATRAL, B DEILEY
Drilling Equipment: ACKER SOIL SENTRY

SAA = Same as Above
PID = Photoionization Detector
N/A = Not Applicable

1208

PROJECT NUMBER: 20.03.05	PROJECT NAME: CRU2 RI PHASE II FIELD INVESTIGATION	
BORING NUMBER: 11020	COORDINATES: NORTH 477062.34 EAST 1379593.53	DATE:11-MAY-93
GROUND ELEVATION: 537	GWL: Depth Date/Time	DATE STARTED: 11-MAY-93
ENGINEER/GEOLOGIST: J REAGAN	Depth Date/Time	DATE COMPLETE: 11-MAY-93
DRILLING METHOD: HOLLOW STEM AUGER		

DEPTH	SAMPLE	DATE TIME	BLOWS ON	SAMPLE	RECOVERY	INCHES		USCS SYMBOL	TSF	REMARKS
1.0	05/11/93 00:00		N/A		N/A		(10YR, 3/3), SILTY FINE SAND, LOW PLASTICITY, DRY	ML	N/A	
1.0 20.0	05/11/93 00:00		N/A		N/A		(10YR, 4/3) BROWN, POORLY GRADED SAND, LOW PLASTLICITY, MOIST	SP	N/A	
20.0 20.5	113042 113043 113045 113044 05/11/93 09:30		12		6		DENSE, (10YR 4/3) BROWN, POORLY GRADED SAND, LOW PLASTICITY, WET	SP	N/A	PID=0 ppm α=0 ppm βΓ=60 cpm
20.5 21.0	113042 113043 113045 113044 05/11/93 09:30		17		6		SAA	SP	N/A	PID=0 ppm α=0 ppm βΓ=60 cpm
21.0 21.5	113042 113043 113045 113044 05/11/93 09:30		17		6		SAA	SP	N/A	PID=0 ppm α=0 ppm βΓ=60 cpm
21.5 22.0	113042 113043 113044 113045 05/11/93 09:30		28		6		SAA	SP	N/A	PID=0 ppm α=0 ppm βΓ=60 cpm
22.0 23.0	113046 05/11/93 10:30		N/A		N/A		HYDROPUNCH FROM 22-23FT. PULLED BACK 4 FT. SAMPLE 19-23FT. WATER LEVEL 17.08FT	N/A	N/A	

NOTES:

Boring Contractor: PENNSYLVANIA
Driller: M WATRAL, B DEILEY
Drilling Equipment: ACKER SOIL SENTRY

SAA = Same as Above
PID = Photoionization Detector
N/A = Not Applicable

1209

PROJECT NUMBER: 20.03.05	PROJECT NAME: CRU2 RI PHASE II FIELD INVESTIGATION	
BORING NUMBER: 11021	COORDINATES: NORTH 477130.70 EAST 1379554.85	DATE:12-MAY-93
GROUND ELEVATION: 540.1	GWL: Depth 16.79 Date/Time	DATE STARTED: 12-MAY-93
ENGINEER/GEOLOGIST: J REAGAN	Depth Date/Time	DATE COMPLETE: 13-MAY-93
DRILLING METHOD: HOLLOW STEM AUGER		

DEPTH	SAMPLE	DATE TIME	BLOWS ON	SAMPLE	RECOVERY	INCHES		USCS	SYMBOL	TSF	REMARKS
20.0	05/12/93 13:20		N/A		N/A		AUGERED 0-20.0FT. SEE BORING LOG FOR 11018. 0-20 FT. (10YR, 4/3) BROWN POORLY GRADED SAND	N/A		N/A	
20.0 20.5	113051 05/12/93 13:20		18		6		VERY DENSE, (10YR, 4/3) BROWN, POORLY GRADED SAND, LOW PLASTICITY, WET	SP		N/A	PID=0 ppm α=0 ppm βΓ=60 cpm
20.5 21.0	113052 05/12/93 13:20		27		6		VERY DENSE, (10YR, 4/3) BROWN, POORLY GRADED SAND, LOW PLASTICITY, WET	SP		N/A	PID=0 ppm α=0 ppm βΓ=60 cpm
21.0 21.5	113053 05/12/93 13:20		34		6		VERY DENSE, (10YR, 4/3) BROWN, POORLY GRADED SAND, LOW PLASTICITY, WET	SP		N/A	PID=0 ppm α=0 ppm βΓ=60 cpm
21.5 25.0	113054 05/12/93 13:20		N/A		N/A		HYDROPUNCH SAMPLE DRIVEN TO 25 FT. PULL BACK TO 21 FT.	N/A		N/A	

NOTES:

Boring Contractor: PENNSYLVANIA DRILLING CO.
Driller: M WATRAL, B DILLEY
Drilling Equipment: ACKER SOIL SENTRY

SAA = Same as Above
PID = Photoionization Detector
N/A = Not Applicable

1210

PROJECT NUMBER: 20.03.05	PROJECT NAME: CRU2 RI PHASE II FIELD INVESTIGATION	
BORING NUMBER: 11022	COORDINATES: NORTH 477143.19 EAST 1379427.61	DATE:13-MAY-93
GROUND ELEVATION: 539.6	GWL: Depth Date/Time	DATE STARTED: 13-MAY-93
ENGINEER/GEOLOGIST: J REAGAN	Depth Date/Time	DATE COMPLETE: 13-MAY-93
DRILLING METHOD: HOLLOW STEM AUGER		

DEPTH	SAMPLE	DATE TIME	BLOWS ON	SAMPLE	RECOVERY	INCHES		USCS SYMBOL	TSF	REMARKS
20.0		05/13/93 14:35	N/A		N/A		AUGERED 1-20FT (10YR, 4/3) SAND	N/A	N/A	
20.0 20.5	113055	05/13/93 14:35	12		6		DENSE (10YR, 4/3) POORLY GRADED SAND, LOW PLASTICITY, WET	SP	N/A	PID=.9 ppm α=0 ppm βΓ=60 cpm
20.5 21.0	113056	05/13/93 14:35	13		6		SAA	N/A SP	N/A	PID=.9 ppm α=0 ppm βΓ=60 cpm
21.0 21.5	113057	05/13/93 14:35	24		6		SAA	N/A SP	N/A	PID=.9 ppm α=0 ppm βΓ=60 cpm
21.5 25.0	113058	05/13/93 15:05	N/A		N/A		HYDROPUNCH SAMPLE FROM 21'-25'	N/A	N/A	

NOTES:
BACKGROUND: HNU=.9PPM/BETA GAMMA=60CPM

Boring Contractor: PENNSYLVANIA DRILLING CO.
Driller: M WATRAL, B DEILEY
Drilling Equipment: ACKER SOIL SENTRY

SAA = Same as Above
PID = Photoionization Detector
N/A = Not Applicable

1211

PROJECT NUMBER: 20.03.05	PROJECT NAME: CRU2 RI PHASE II FIELD INVESTIGATION	
BORING NUMBER: 11023	COORDINATES: NORTH 477145.50 EAST 1379283.43	DATE:14-MAY-93
GROUND ELEVATION: 536.5	GWL: Depth 16.08 Date/Time 14-Apr-93 10:20	DATE STARTED: 14-MAY-93
ENGINEER/GEOLOGIST: J REAGAN	Depth Date/Time	DATE COMPLETE: 14-MAY-93
DRILLING METHOD: HOLLOW STEM AUGER		

DEPTH	SAMPLE	DATA TIME	BLOWS ON SAMPLE	RECOVERY INCHES		USCS SYMBOL	TSF	REMARKS
20.0	05/14/93 00:00		N/A	N/A	AUGERED 0-20'. 0-10' (10YR, 2/1) VERY FINE SAND. 10-20' (10YR, 4/3) POORLY GRADED SAND WITH MANY GRAVELS.	N/A	N/A	
20.0 20.5	113059 05/14/93 09:45		7	6	DENSE, (10YR, 4/3), POORLY GRADED SAND, LOW PLASTICITY, WET	SP	N/A	PID=0 ppm α=0 ppm βΓ=60 cpm
20.5 21.0	113060 05/14/93 09:45		13	6	SAA	SP	N/A	PID=0 ppm α=0 ppm βΓ=60 cpm
21.0 21.5	113061 05/14/93 09:45		17	4	SAA	SP	N/A	PID=0 ppm α=0 ppm βΓ=60 cpm
21.5 25.0	113062 05/14/93 10:20		N/A	N/A	HYDROPUNCH SAMPLE FROM 21-25'. BOTTOM OF BORING AT 25'.	N/A	N/A	

NOTES:

Boring Contractor: PENNSYLVANIA
Driller: M WATRAL, B DEILEY
Drilling Equipment: ACKER SOIL SENTRY

SAA = Same as Above
PID = Photoionization Detector
N/A = Not Applicable

1212

5174 02/02/94 17:03

PROJECT NUMBER: 20.03.05	PROJECT NAME: CRU2 RI PHASE II FIELD INVESTIGATION	
BORING NUMBER: 11024	COORDINATES: NORTH 477871.82 EAST 1379924.37	DATE:15-MAY-93
GROUND ELEVATION: 577.6	GWL: Depth 8.82 Date/Time 15-May-93 13:00	DATE STARTED: 15-MAY-93
ENGINEER/GEOLOGIST: J REAGAN	Depth Date/Time	DATE COMPLETE: 15-MAY-93
DRILLING METHOD: HOLLOW STEM AUGER		

DEPTH	SAMPLE	DATA TIME	BLOWS ON	SAMPLE	RECOVERY	INCHES		USCS SYMBOL	TSF	REMARKS
3.5		05/15/93 10:30	N/A		N/A		AUGERED TO 3.5'	N/A	N/A	
5.0	113063	05/15/93 10:35	5	8			VERY STIFF, (10YR, 4/4) DARK YELLOWISH BROWN, SILTY FINE SAND, LOW PLASTICITY, MOIST	ML	2	PID=1.2 ppm α=0 ppm βΓ=50 cpm
6.5	113064	05/15/93 10:40	7	12			VERY STIFF, (10YR, 4/4)(10YR, 6/1) MOTTLES, SILTY CLAY, MEDIUM PLASTICITY, MOIST	CL	2.5	PID=1.6 ppm α=0 ppm βΓ=50 cpm
8.0	113065	05/15/93 10:45	13	18			STIFF, (10YR, 4/4)(10YR, 6/1) MOTTLES, SILTY FINE SAND, LOW PLASTICITY, VERY MOIST	ML	1.5	PID=1.3 ppm α=0 ppm βΓ=50 cpm
9.5	103066	05/15/93 11:00	7	9			STIFF, (10YR, 4/4), SILTY CLAY, LOW PLASTICITY, WET	CL	1.5	PID=1.8 ppm α=0 ppm βΓ=50 cpm
10.5	113067	05/15/93 13:10	N/A		N/A		HYDROPUNCH SAMPLE FROM 6.5-10.5'	N/A	N/A	

NOTES:

Boring Contractor: PENNSYLVANE DRILLING
Driller: M WATRAL B SIBERT
Drilling Equipment: ACKLER SOIL SENTRY

SAA = Same as Above
PID = Photoionization Detector
N/A = Not Applicable

1213

PROJECT NUMBER: 20.03.05	PROJECT NAME: CRU2 RI PHASE II FIELD INVESTIGATION	
BORING NUMBER: 11025	COORDINATES: NORTH 478008.01 EAST 1379771.86	DATE:15-MAY-93
GROUND ELEVATION: 577	GWL: Depth Date/Time	DATE STARTED: 15-MAY-93
ENGINEER/GEOLOGIST: J REAGAN	Depth Date/Time	DATE COMPLETE: 15-MAY-93
DRILLING METHOD: HOLLOW STEM AUGER		

DEPTH	SAMPLE	DATA TIME	BLOWS ON	SAMPLE	RECOVERY	INCHES		USCS SYMBOL	TSF	REMARKS
3.5	05/15/93 15:05		N/A		N/A		AUGERED TO 3.5'	N/A	N/A	
3.5 4.0	113068 05/15/93 15:05		4		6		STIFF (10YR, 5/6) SILTY FINE SAND	ML	1.5	PID=.5 ppm α=0 ppm βΓ=50 cpm
4.0 4.5	113068 05/15/93 15:05		6		6		LOW PLASTICITY, VERY MOIST	N/A ML	N/A 1.5	PID=.5 ppm α=0 ppm βΓ=50 cpm
4.5 5.0	113068 05/15/93 15:05		7		6		SAA	N/A ML	N/A 1.5	PID=.5 ppm α=0 ppm βΓ=50 cpm
5.0 5.5	113069 05/15/93 15:10		4		6		STIFF (10YR, 5/6), (10YR, 5/1) MOTTLES	CL	2	PID=.5 ppm α=0 ppm βΓ=50 cpm
5.5 6.0	113069 05/15/93 15:10		6		6		SILTY CLAY, MEDIUM PLASTICITY, MOIST	CL	2	PID=.5 ppm α=0 ppm βΓ=50 cpm
6.0 6.5	113069 05/15/93 15:10		9		6		SAA	CL	2	PID=.5 ppm α=0 ppm βΓ=50 cpm
6.5 7.0	113070 05/15/93 15:15		7		6		STIFF (10YR, 4/3) SILTY, FINE SAND, LOW PLASTICITY, WET	ML	1	PID=.5 ppm α=0 ppm βΓ=50 cpm
7.0 7.5	113070 05/15/93 15:15		15		6		SAA	ML	1	PID=.5 ppm α=0 ppm βΓ=50 cpm
7.5 8.0	113070 05/15/93 15:15		26		6		STIFF (10YR, 4/3) SILTY FINE SAND, LOW PLASTICITY, WET	ML	1	PID=.5 ppm α=0 ppm βΓ=50 cpm
8.0 10.5	113071 05/15/93 15:50		N/A		N/A		HYDROPUNCH FROM 6.5-10.5	N/A	N/A	

NOTES:

Boring Contractor: PENNSYLVANIA DRILLING
Driller: M WATRAL
Drilling Equipment: ACKER SOIL SENTRY

SAA = Same as Above
PID = Photoionization Detector
N/A = Not Applicable

PROJECT NUMBER: 20.03.05	PROJECT NAME: CRU2 RI PHASE II FIELD INVESTIGATION	
BORING NUMBER: 11026	COORDINATES: NORTH 478072.97 EAST 1379305.03	DATE:14-MAY-93
GROUND ELEVATION: 574.2	GWL: Depth Date/Time	DATE STARTED: 14-MAY-93
ENGINEER/GEOLOGIST: J BOYER	Depth Date/Time	DATE COMPLETE: 15-MAY-93
DRILLING METHOD: HOLLOW STEM AUGER		

DEPTH	SAMPLE	DATE TIME	BLOWS ON SAMPLE	RECOVERY INCHES		USCS SYMBOL	TSF	REMARKS
5.0		05/14/93 16:20	N/A	N/A	DESTRUCTIVE DRILLING	N/A	N/A	
5.0 6.5	113142	05/14/93 16:20	12 17 14	17	DENSE, (2.5Y, 5/6) LIGHT OLIVE BROWN, CLAYEY SILT, MOIST, NO PLASTICITY, TRACE DOLOMITE (CONCRETE)	ML	N/A	PID=0 ppm BΓ=60 cpm
6.5 8.0	113143	05/14/93 16:30	13 17 32	16	HARD, (2.5Y, 5/6) LIGHT OLIVE BROWN, SILTY CLAY, SLIGHT PLASTICITY, SLIGHTLY MOIST	CL	4	PID=0 ppm BΓ=60 cpm
8.0 9.5		05/15/93 00:00	13 12 11	16	VERY STIFF, (2.5Y, 5/6) LIGHT OLIVE BROWN, SILTY CLAY, SLLIGHT PLASTICITY, SLIGHTLY MOIST	CL	4	PID=0 ppm BΓ=60 cpm
11.0 12.5	113144	05/04/93 09:15	10 9 10	18	MEDIUM DENSE (2.5Y, 5/2) GRAYISH BROWN, SILT, WITH FINE SAND, WET	ML	N/A	PID=0 ppm BΓ=20 cpm
12.5 14.5	113145	05/14/93 13:00	N/A	N/A	HYDROPUNCH	N/A	N/A	

NOTES:

Boring Contractor: PENNSYLVANIA DRILLING CO.
Driller: JOE RAAB,ROGER DAVIS
Drilling Equipment: ACKER

SAA = Same as Above
PID = Photoionization Detector
N/A = Not Applicable

PROJECT NUMBER: 20.03.05	PROJECT NAME: CRU2 RI PHASE II FIELD INVESTIGATION	
BORING NUMBER: 11027	COORDINATES: NORTH 477826.93 EAST 1379322.17	DATE:11-MAY-93
GROUND ELEVATION: 571.9	GWL: Depth Date/Time	DATE STARTED: 11-MAY-93
ENGINEER/GEOLOGIST: D O'BRIEN	Depth Date/Time	DATE COMPLETE: 13-MAY-93
DRILLING METHOD:		

DEPTH	SAMPLE	DATE TIME	BLOWS ON SAMPLE	RECOVERY INCHES		USCS SYMBOL	TSF	REMARKS
.5	113092	05/11/93 09:35	9	4	VERY STIFF, (2.5Y, 5/6) OLIVE YELLOW, GRAVELLY CLAY, NO PLASTICITY, DRY	CL	3.5	PID=0 ppm βΓ=60 cpm
.5 1.0		05/11/93 00:00	11	0	NO RECOVERY	N/A	N/A	
1.0 1.5		05/11/93 00:00	15	0	NO RECOVERY	N/A	N/A	
1.5 2.0	113093	05/11/93 09:40	15	6	VERY STIFF, (2.5Y, 5/4) LIGHT OLIVE BROWN, SILTY CLAY WITH GRAVEL, NO PLASTICITY, DRY	CL	2	PID=0 ppm βΓ=60 cpm
2.0 2.5		05/11/93 00:00	16	3	SAA	CL	2	PID=0 ppm βΓ=60 cpm
2.5 3.0		05/11/93 09:40	18	0	NO RECOVERY	N/A	N/A	
3.0 3.5		05/11/93 09:45	12	0	NO RECOVERY	N/A	N/A	
3.5 4.0		05/11/93 09:45	13	0	NO RECOVERY	N/A	N/A	
4.0 4.5		05/11/93 09:45	12	0	NO RECOVERY	N/A	N/A	
4.5 5.0	113094	05/11/93 10:05	4	6	STIFF (2.5Y, 5/4) LIGHT OLIVE BROWN, SANDY CLAY WITH GRAVEL, LOW PLASTICITY, MOIST	CL	1	PID=0 ppm βΓ=60 cpm
5.0 5.5	113094	05/11/93 10:05	4	6	SAA	CL	1	PID=0 ppm βΓ=60 cpm
5.5 6.0	113094	05/11/93 10:05	6	0	NO RECOVERY	N/A	N/A	
6.0 6.5	113095	05/11/93 10:20	2	5	VERY STIFF (2.5Y, 5/6) LIGHT OLIVE BROWN, CLAY, TRACE GRAVEL, LOW PLASTICITY, MOIST	CL	3.25	PID=0 ppm βΓ=60 cpm

NOTES:

SAA = Same as Above
PID = Photoionization Detector
N/A = Not Applicable

1216

PROJECT NUMBER: 20.03.05	PROJECT NAME: CRU2 RI PHASE II FIELD INVESTIGATION	
BORING NUMBER: 11027	COORDINATES: NORTH 477826.93 EAST 1379322.17	DATE:11-MAY-93
GROUND ELEVATION: 571.9	GWL: Depth Date/Time	DATE STARTED: 11-MAY-93
ENGINEER/GEOLOGIST: D O'BRIEN	Depth Date/Time	DATE COMPLETE: 13-MAY-93
DRILLING METHOD:		

DEPTH	SAMPLE	DATE TIME	BLOWS ON SAMPLE	RECOVERY INCHES		USCS SYMBOL	TSF	REMARKS
6.5 7.0	113095	05/11/93 10:20	2	0	NO RECOVERY	N/A	N/A	
7.0 7.5	113095	05/11/93 10:20	4	0	NO RECOVERY	N/A	N/A	
7.5 8.0	113096	05/11/93 10:30	1	3	STIFF (2.5Y, 5/4) LIGHT OLIVE BROWN, CLAY, TRACE GRAVEL, NO PLASTICITY, SLIGHTLY MOIST	CL	1	PID=0 ppm BΓ=60 cpm
8.0 8.5	113096	05/11/93 10:30	1	0	NO RECOVERY	N/A	N/A	
8.5 9.0	113096	05/11/93 10:30	1	0	NO RECOVERY	N/A	N/A	
9.0 9.5	113097	05/11/93 10:40	2	6	LOOSE (2.5Y, 6/6) OLIVE YELLOW SILT AND SAND MIXTURE, FINE TO MEDIUM GRAINED, WET	SM	N/A	PID=0 ppm BΓ=60 cpm
9.5 10.0	113097	05/11/93 10:40	3	4	SAA	SM	N/A	PID=0 ppm BΓ=60 cpm
10.0 10.5	113097	05/11/93 10:40	3	0	NO RECOVERY	N/A	N/A	
10.5 11.0	113098	05/11/93 13:10	4	5	STIFF (2.5Y, 5/6) LIGHT OLIVE BROWN, CLAY MIXED WITH SILT AND SAND, COARSE GRAIN, NO PLASTICITY, WET	CL	1	PID=0 ppm BΓ=60 cpm
11.0 11.5	113098	05/11/93 13:10	5	0	NO RECOVERY	N/A	N/A	
11.5 12.0	113098	05/11/93 13:10	5	0	NO RECOVERY	N/A	N/A	
12.0 12.5	113099	05/11/93 13:20	5	6	VERY STIFF (2.5Y, 6/6) OLIVE YELLOW, SILTY CLAY WITH GRAVEL, NO PLASTICITY, WET	CL	2	PID=0 ppm BΓ=60 cpm
12.5 13.0	113099	05/11/93 13:20	8	4	MEDIUM DENSE (2.5Y) SILT WITH GRAVEL, WET	N/A ML	N/A	PID=0 ppm BΓ=60 cpm

NOTES:

SAA = Same as Above
PID = Photoionization Detector
N/A = Not Applicable

PROJECT NUMBER: 20.03.05	PROJECT NAME: CRU2 RI PHASE II FIELD INVESTIGATION	
BORING NUMBER: 11027	COORDINATES: NORTH 477826.93 EAST 1379322.17	DATE:11-MAY-93
GROUND ELEVATION: 571.9	GWL: Depth Date/Time	DATE STARTED: 11-MAY-93
ENGINEER/GEOLOGIST: D O'BRIEN	Depth Date/Time	DATE COMPLETE: 13-MAY-93
DRILLING METHOD:		

DEPTH	SAMPLE	DATE TIME	BLOWS ON SAMPLE	RECOVERY INCHES		USCS SYMBOL	TSF	REMARKS
13.0 13.5	113099	05/11/93 13:20	14	0	NO RECOVERY	N/A	N/A	
13.5 14.0	113100	05/12/93 08:30	1	3	SOFT (2.5Y, 6/6) OLIVE YELLOW CLAY, NO PLASTICITY, WET	CL	.5	PID=0 ppm βΓ=60 cpm
14.0 14.5	113100	05/12/93 08:30	1	0	NO RECOVERY	N/A	N/A	
14.5 15.0	113100	05/12/93 08:30	2	0	NO RECOVERY	N/A	N/A	
15.0 15.5	113101	05/12/93 08:40	3	4	SOFT (2.5Y, 5/1) GRAY, SILTY CLAY WITH GRAVEL, LOW PLASTICITY, WET	CL	.25	PID=0 ppm βΓ=40 cpm
15.5 16.0	113101	05/12/93 08:40	3	0	NO RECOVERY	N/A	N/A	
16.0 16.5	113101	05/12/93 08:40	4	0	NO RECOVERY	N/A	N/A	
16.5 17.0	113102	05/12/93 09:05	16	6	VERY STIFF (2.5Y, 5/1) GRAY, GRAVELLY CLAY, NO PLASTICITY, DRY	CL	3	PID=0 ppm βΓ=60 cpm
17.0 17.5	113102	05/12/93 09:05	23	5	SAA	CL	3	PID=0 ppm βΓ=60 cpm
17.5 18.0	113102	05/12/93 09:05	50	0	NO RECOVERY	N/A	N/A	

NOTES:

SAA = Same as Above
PID = Photoionization Detector
N/A = Not Applicable

1218

5174 02/02/94 17:03

PROJECT NUMBER: 20.03.05	PROJECT NAME: CRU2 RI PHASE II FIELD INVESTIGATION	
BORING NUMBER: 11028	COORDINATES: NORTH 477345.79 EAST 1379472.40	DATE:20-MAY-93
GROUND ELEVATION: 570.1	GWL: Depth Date/Time	DATE STARTED: 20-MAY-93
ENGINEER/GEOLOGIST: D O'BRIEN	Depth Date/Time	DATE COMPLETE: 26-MAY-93
DRILLING METHOD: HOLLOW STEM AUGER		

DEPTH	SAMPLE DATE TIME	BLOWS ON SAMPLE	RECOVERY INCHES		USCS SYMBOL	TSF	REMARKS
28.0	05/20/93 00:00	N/A	N/A	FOR SOIL DESCRIPTIONS SEE BORING LOG FOR 1965	N/A	N/A	
28.0 55.0	05/20/93 00:00	N/A	N/A	TYPICAL AQUIFER SANDS	N/A	N/A	

NOTES:

Boring Contractor: PENNSYLVANIA DRILL
Driller: JEFF BENTLEY, MIKE LEON
Drilling Equipment: ACKER SENTRY

SAA = Same as Above
PID = Photoionization Detector
N/A = Not Applicable

1219

5174

PROJECT NUMBER: 20.03.05	PROJECT NAME: CRU2 RI PHASE II FIELD INVESTIGATION	
BORING NUMBER: 11029	COORDINATES: NORTH 477242.15 EAST 1379479.67	DATE:06-MAY-93
GROUND ELEVATION: 560	GWL: Depth 42.8 Date/Time 06-May-93 15:50	DATE STARTED: 06-MAY-93
ENGINEER/GEOLOGIST: D O'BRIEN	Depth Date/Time	DATE COMPLETE: 07-MAY-93
DRILLING METHOD: HOLLOW STEM AUGER		

DEPTH	SAMPLE	DATE TIME	BLOWS ON SAMPLE	RECOVERY INCHES		USCS SYMBOL	TSF	REMARKS
40.0	05/06/93 15:45		N/A	N/A	NO SAMPLING REQUIRED FROM 0-40 FT	N/A	N/A	
40.0 41.5	113006 05/06/93 15:45		10 13 8	18	MEDIUM DENSE (2.5Y, 5/6) LIGHT OLIVE BROWN, MEDIUM TO COARSE SAND POORLY GRADED, WET	SP	N/A	PID=0 ppm BΓ=60 cpm

NOTES:

Boring Contractor: PENNSYLVANIA DRILLING
Driller: CRAIG CAITTER, BILL SIBERT
Drilling Equipment: ACKER

SAA = Same as Above
PID = Photoionization Detector
N/A = Not Applicable

1220

PROJECT NUMBER: 20.03.05	PROJECT NAME: CRU2 RI PHASE II FIELD INVESTIGATION	
BORING NUMBER: 11030	COORDINATES: NORTH 477509.39 EAST 1379495.81	DATE:28-MAY-93
GROUND ELEVATION: 574.7	GWL: Depth Date/Time	DATE STARTED: 28-MAY-93
ENGINEER/GEOLOGIST: J REAGAN/T LAYN	Depth Date/Time	DATE COMPLETE: 03-JUN-93

DRILLING METHOD: HOLLOW STEM AUGER

DEPTH	SAMPLE	DATE TIME	BLOWS ON SAMPLE	RECOVERY INCHES		USCS SYMBOL	TSF	REMARKS
15.0		06/01/93 10:00	N/A	N/A	DRILLING TO WATER TABLE HARD DRILLING AT 12'-13.5' AND 14'-15' *CHANGED TO LARGER DRILLING RIG CONTINUED DRILLING	N/A	N/A	
50.0 51.3		06/01/93 11:00	6	15	(2.5Y, 5/3) LIGHT OLIVE BROWN CLAY MOIST	CL	3.2	
51.3 52.0		06/01/93 11:00	N/A 12 24 42	9	(2.5Y, 5/3) OLIVE BROWN SAND SLIGHTLY MOIST	SP	N/A	
60.0 62.0		06/01/93 14:00	34 32 27 50	24	(2.5Y, 4/3) OLIVE BROWN, LOOSE SAND, MEDIUM-COARSE GRAIN, WELL GRADED, WET	SP	N/A	
63.0 67.0	116361 116362 06/01/93 14:30		N/A	N/A	HYDROPUNCH (HYDISCARBON MODE) TOOK FULL URANIUM WATER SAMPLES	N/A	N/A	

NOTES:

Boring Contractor: PENNSYLVANIA DRILLING
Driller: JOE RAAB, ROGER DAVIS, HELPER
Drilling Equipment: ACKER SOIL SENTRY

SAA = Same as Above
PID = Photoionization Detector
N/A = Not Applicable

1221

PROJECT NUMBER: 20.03.05	PROJECT NAME: CRU2 RI PHASE II FIELD INVESTIGATION	
BORING NUMBER: 11031	COORDINATES: NORTH 477278.12 EAST 1380175.03	DATE:07-JUN-93
GROUND ELEVATION: 573.8	GWL: Depth Date/Time	DATE STARTED: 07-JUN-93
ENGINEER/GEOLOGIST: A COMO	Depth Date/Time	DATE COMPLETE: 07-JUN-93

DRILLING METHOD: HOLLOW STEM AUGER

DEPTH	SAMPLE	DATE TIME	BLOWS ON SAMPLE	RECOVERY INCHES		USCS SYMBOL	TSF	REMARKS
.5	116920 116921	06/07/93 10:10	6	6	VERY STIFF, (2.5Y, 5/6) LIGHT OLIVE BROWN, SILTY CLAY, LOW PLASTICITY, ORGANIC MATERIAL, DRY	CL	2.5	PID=.7 ppm BΓ=40-80 cpm
.5 1.0	116920 116921	06/07/93 10:10	6	6	SAA	CL	2.5	PID=.7 ppm BΓ=40-80 cpm
1.0 1.5		06/07/93 10:10	6	0	NO RECOVERY	N/A	N/A	PID=.7 ppm BΓ=40-80 cpm
1.5 2.0	116922 116923	06/07/93 10:15	4	6	VERY STIFF, (2.5Y, 5/6) LIGHT OLIVE BROWN, SILTY CLAY, LOW PLASTLICITY, DRY	CL	3.5	PID=.7 ppm BΓ=40-80 cpm
2.0 2.5	116922 116933	06/07/93 10:15	8	6	SAA	CL	3.5	PID=.7 ppm BΓ=40-80 cpm
2.5 3.0		06/07/93 10:15	8	0	NO RECOVERY	N/A	N/A	PID=.7 ppm BΓ=40-80 cpm
3.0 3.5	116924 116953 116925	06/07/93 10:30	17	6	SAA	CL	3.5	PID=.7 ppm BΓ=40-80 cpm
3.5 4.0	116924 116925 116953	06/07/93 10:30	18	6	DENSE, (2.5Y 6/6) OLIVE YELLOW CLAYEY SILT, THIN (5Y, 7/1) LIGHT GRAY SILT LENSES, NO PLASTICITY, DRY	ML	N/A	PID=.7 ppm BΓ=40-80 cpm
4.0 4.5	116924 116925 116953	06/07/93 10:30	21	2	SAA	ML	N/A	PID=.7 ppm BΓ=40-80 cpm
4.5 5.0	116926 116928 116927	06/07/93 10:50	14	6	SAA	ML	N/A	PID=.7 ppm BΓ=40-80 cpm

NOTES:
DRILLED/SAMPLED TO 19.5 FT. NO WATER WAS ENCOUNTERED.
BACKGROUND: MT = .7 PPM BETA/GAMMA = 40 - 80 CPM

Boring Contractor: PENNSYLVANIA DRILLING CO
Driller: MIKE BENTLEY

SAA = Same as Above
PID = Photoionization Detector
N/A = Not Applicable

1222

PROJECT NUMBER: 20.03.05	PROJECT NAME: CRU2 RI PHASE II FIELD INVESTIGATION	
BORING NUMBER: 11031	COORDINATES: NORTH 477278.12 EAST 1380175.03	DATE:07-JUN-93
GROUND ELEVATION: 573.8	GWL: Depth Date/Time	DATE STARTED: 07-JUN-93
ENGINEER/GEOLOGIST: A COMO	Depth Date/Time	DATE COMPLETE: 07-JUN-93
DRILLING METHOD: HOLLOW STEM AUGER		

DEPTH	SAMPLE	DATE TIME	BLOWS ON	SAMPLE	RECOVERY	INCHES		USCS	SYMBOL	TSF	REMARKS
5.0 5.5	116926 116927 116928	06/07/93 10:50	20		6		SAA	ML		N/A	PID=.7 ppm BΓ=40-80 cpm
5.5 6.0	116926 116927 116928	06/07/93 10:50	28		6		SAA	ML		N/A	PID=.7 ppm BΓ=40-80 cpm
6.0 6.5	116929 116931 116930	06/07/93 11:00	10		6		SAA	ML		N/A	PID=.7 ppm BΓ=40-80 cpm
6.5 7.0	116929 116931 116930	06/07/93 11:00	10		6		SAA	ML		N/A	PID=.7 ppm BΓ=40-80 cpm
7.0 7.5	116929 116930 116931	06/07/93 11:00	19		6		SAA	ML		N/A	PID=.7 ppm BΓ=40-80 cpm
7.5 8.0	116932 116933 116934	06/07/93 11:10	4		6		SAA	ML		N/A	PID=.7 ppm BΓ=40-80 cpm
8.0 8.5	116932 116934 116933	06/07/93 11:10	10		6		SAA	ML		N/A	PID=.7 ppm BΓ=40-80 cpm
8.5 9.0	116932 116933 116934	06/07/93 11:10	14		6		SAA	ML		N/A	PID=.7 ppm BΓ=40-80 cpm
9.0 9.5	116935 116936 116937	06/07/93 13:05	4		6		DENSE, (2.5Y 5/6) LIGHT OLIVE BROWN, CLAYEY SILT, DRY, THIN (5Y, 7/1) LIGHT GRAY CLAYEY SILT, LENSES	ML		N/A	PID=.7 ppm BΓ=40-80 cpm

NOTES:
DRILLED/SAMPLED TO 19.5 FT. NO WATER WAS ENCOUNTERED.
BACKGROUND: MT = .7 PPM BETA/GAMMA = 40 - 80 CPM

Boring Contractor: PENNSYLVANIA DRILLING CO
Driller: MIKE BENTLEY

SAA = Same as Above
PID = Photoionization Detector
N/A = Not Applicable

1223

PROJECT NUMBER: 20.03.05	PROJECT NAME: CRU2 RI PHASE II FIELD INVESTIGATION	
BORING NUMBER: 11031	COORDINATES: NORTH 477278.12 EAST 1380175.03	DATE:07-JUN-93
GROUND ELEVATION: 573.8	GWL: Depth Date/Time	DATE STARTED: 07-JUN-93
ENGINEER/GEOLOGIST:. A COMO	Depth Date/Time	DATE COMPLETE: 07-JUN-93
DRILLING METHOD: HOLLOW STEM AUGER		

DEPTH	SAMPLE	DATE TIME	BLOWS ON	SAMPLE	RECOVERY	INCHES		USCS SYMBOL	TSF	REMARKS
9.5 10.0	116935 116936 116937	06/07/93 13:05	16		6		SAA	ML	N/A	PID=0.7 ppm βΓ=40-80 cpm
10.0 10.5	116935 116936 116937	06/07/93 13:05	15		6		DENSE, (2.5Y, 5/6) LIGHT OLIVE BROWN, SILT, DRY	ML	N/A	PID=.7 ppm βΓ=40-80 cpm
10.5 11.0	116938 116939 116940	06/07/93 13:15	6		6		SAA	ML	N/A	PID=.7 ppm βΓ=40-80 cpm
11.0 11.5	116938 116939 116940	06/07/93 13:15	8		6		SAA	ML	N/A	PID=0.7 ppm βΓ=40-80 cpm
11.5 12.0	116938 116940 116939	06/07/93 13:15	9		6		MEDIUM DENSE, (2.5Y 5/6) LIGHT OLIVE BROWN AND (10YR, 3/2) VERY DARK GRAYISH BROWN, CLAYEY SILT, DRY	ML	N/A	PID=0.7 ppm βΓ=40-80 cpm
12.0 12.5	116941 116942 116943	06/07/93 13:25	4		6		SAA	ML	N/A	PID=0.7 ppm βΓ=40-80 cpm
12.5 13.0	116941 116943 116942	06/07/93 13:25	8		6		MEDIUM DENSE, (2.5Y 6/4) LIGHT YELLOWISH BROWN, SILT, DRY	ML	N/A	PID=0.7 ppm βΓ=40-80 cpm
13.0 13.5	116941 116942 116943	06/07/93 13:25	10		6		SAA	ML	N/A	PID=0.7 ppm βΓ=40-80 cpm
13.5 14.0	116944 116946 116945	06/07/93 13:35	4		6		MEDIUM DENSE, (2.5Y 6/4) LIGHT YELLOWISH BROWN, CLAYEY SILT, DRY	ML	N/A	PID=0.7 ppm βΓ=40-80 cpm

NOTES:
DRILLED/SAMPLED TO 19.5 FT. NO WATER WAS ENCOUNTERED.
BACKGROUND: MT = .7 PPM BETA/GAMMA = 40 - 80 CPM

Boring Contractor: PENNSYLVANIA DRILLING CO
Driller: MIKE BENTLEY

SAA = Same as Above
PID = Photoionization Detector
N/A = Not Applicable

1224

5174

PROJECT NUMBER: 20.03.05	PROJECT NAME: CRU2 RI PHASE II FIELD INVESTIGATION	
BORING NUMBER: 11031	COORDINATES: NORTH 477278.12 EAST 1380175.03	DATE:07-JUN-93
GROUND ELEVATION: 573.8	GWL: Depth Date/Time	DATE STARTED: 07-JUN-93
ENGINEER/GEOLOGIST: A COMO	Depth Date/Time	DATE COMPLETE: 07-JUN-93
DRILLING METHOD: HOLLOW STEM AUGER		

DEPTH	SAMPLE	DATE TIME	BLOWS ON SAMPLE	RECOVERY INCHES		USCS SYMBOL	TSF	REMARKS
14.0 14.5	116944 116945 116946	06/07/93 13:35	9	6	SAA	ML	N/A	PID=0.7 ppm BΓ=40-80 cpm
14.5 15.0	116944 116945 116946	06/07/93 13:35	11	6	HARD, (5Y, 5/1) GRAY AND (2.5Y, 5/3) LIGHT OLIVE BROWN, SILTY CLAY, LOW PLASTICITY, FEW SMALL GRAVEL, IRON STAINING, DRY	CL	4.5	PID=0.7 ppm BΓ=40-80 cpm
15.0 15.5	116947 116948 116949	06/07/93 13:45	8	6	SAA	CL	4.0	PID=0.7 ppm BΓ=40-80 cpm
15.5 16.0	116947 116948 116949	06/07/93 13:45	10	6	HARD, (5Y, 5/1) GRAY, SILTY CLAY WITH SOME (5Y, 5/2) OLIVE GRAY, SILTY CLAY, LOW PLASTICITY, SMALL GRAVEL, IRON STAINING, DRY	CL	4.5	PID=0.7 ppm BΓ=4.5 cpm
16.0 16.5	116947 116948 116949	06/07/93 13:45	13	6	SAA	CL	4.5	PID=0.7 ppm BΓ=40-80 cpm
16.5 17.0	116950 116952 116951	06/07/93 13:55	9	6	VERY STIFF, (5Y, 5/2) OLIVE GRAY, SILTY CLAY WITH SOME (5Y, 2.5Y, 5/6) LIGHT OLIVE BROWN, SILTY CLAY, LOW PLASTICITY, FEW VERY SMALL GRAVEL, DRY	CL	2.0	PID=0.7 ppm BΓ=40-80 cpm
17.0 17.5	116950 116951 116952	06/07/93 13:55	17	6	SAA	CL	2.0	PID=0.7 ppm BΓ=40-80 cpm
17.5 18.0	116950 116952 116951	06/07/93 13:55	17	6	HARD, (5Y, 5/1) GRAY AND (2.5Y, 5/4) LIGHT OLIVE BROWN, SILTY CLAY, LOW PLASTICITY, GRAVEL, DRY	CL	4.5	PID=0.7 ppm BΓ=40-80 cpm
18.0 18.5	116954 116955 116956	06/07/93 14:10	8	6	HARD, (5Y, 5/1) GRAY AND (5Y, 5/4) LIGHT OLIVE BROWN, SILTY CLAY, LOW PLASTICITY, SMALL PIECES OF GRAVEL, DRY	CL	4.0	PID=0.7 ppm BΓ=40-80 cpm

NOTES:
DRILLED/SAMPLED TO 19.5 FT. NO WATER WAS ENCOUNTERED.
BACKGROUND: MT = .7 PPM BETA/GAMMA = 40 - 80 CPM

Boring Contractor: PENNSYLVANIA DRILLING CO
Driller: MIKE BENTLEY

SAA = Same as Above
PID = Photoionization Detector
N/A = Not Applicable

1225

PROJECT NUMBER: 20.03.05	PROJECT NAME: CRU2 RI PHASE II FIELD INVESTIGATION	
BORING NUMBER: 11031	COORDINATES: NORTH 477278.12 EAST 1380175.03	DATE:07-JUN-93
GROUND ELEVATION: 573.8	GWL: Depth Date/Time	DATE STARTED: 07-JUN-93
ENGINEER/GEOLOGIST: A COMO	Depth Date/Time	DATE COMPLETE: 07-JUN-93
DRILLING METHOD: HOLLOW STEM AUGER		

DEPTH	SAMPLE	DATE TIME	BLOWS ON	SAMPLE	RECOVERY	INCHES		USCS	SYMBOL	TSF	REMARKS
18.5 19.0	116954 116955 116956	06/07/93 14:10	11		6		SAA	CL		4.0	PID=0.7 ppm BΓ=40-80 cpm
19.0 19.5	116954 116955 116956	06/07/93 14:10	24		6		SAA	CL		4.0	PID=0.7 ppm BΓ=40-80 cpm
19.5		06/07/93 00:00	N/A		N/A		BOTTOM OF BORING 19.5 FEET	N/A		N/A	

NOTES:
DRILLED/SAMPLED TO 19.5 FT. NO WATER WAS ENCOUNTERED.
BACKGROUND: MT = .7 PPM BETA/GAMMA = 40 - 80 CPM

Boring Contractor: PENNSYLVANIA DRILLING CO
Driller: MIKE BENTLEY

SAA = Same as Above
PID = Photoionization Detector
N/A = Not Applicable

1226

PROJECT NUMBER: 20.03.05	PROJECT NAME: CRU2 RI PHASE II FIELD INVESTIGATION	
BORING NUMBER: 11032	COORDINATES: NORTH 478072.47 EAST 1379787.13	DATE:25-JUN-93
GROUND ELEVATION: 577.07	GWL: Depth Date/Time	DATE STARTED: 25-JUN-93
ENGINEER/GEOLOGIST: B E MULLER	Depth Date/Time	DATE COMPLETE: 25-JUN-93
DRILLING METHOD: HOLLOW STEM AUGER		

DEPTH	SAMPLE	DATE TIME	BLOWS ON	SAMPLE	RECOVERY	INCHES		USCS SYMBOL	TSF	REMARKS
.5	113818	06/23/93 14:20	4		6		VERY STIFF (2.5Y, 4/2) DARK GRAYISH BROWN, SILTY CLAY, LOW PLASTICITY, MOIST	CL	3	PID=0 ppm BΓ=40 cpm
1.0	113819	06/23/93 14:20	4		6		VERY STIFF (2.5Y, 5/3) LIGHT OLIVE BROWN, SILTY CLAY, MEDIUM PLASTICITY, MOIST	CL	2.75	PID=0 ppm BΓ=40 cpm
1.5		06/23/93 14:20	5		0		NO RECOVERY	N/A	N/A	
2.0	113820	06/23/93 14:32	4		6		STIFF (2.5Y, 5/4) LIGHT OLIVE BROWN, SILTY CLAY, TRACE GRAY AND BLACK MOTTLES, MEDIUM PLASTICITY, MOIST	CL	1.5	PID=0 ppm BΓ=60 cpm
2.5	113821	06/23/93 14:32	5		6		STIFF (2.5Y, 3/6) LIGHT OLIVE BROWN, SAA	CL	1.75	PID=0 ppm BΓ=60 cpm
3.0		06/23/93 14:32	8		0		NO RECOVERY	N/A	N/A	
3.5	113822	06/23/93 14:43	5		6		SAA	CL	2.5	PID=0 ppm BΓ=50 cpm
4.0	113823	06/23/93 14:43	7		6		SAA	CL	1.5	PID=0 ppm BΓ=50 cpm
4.5	113824	06/23/93 14:43	9		3		SOFT (2.5Y, 5/6) LIGHT OLIVE BROWN, SANDY, SILTY CLAY, MEDIUM PLASTICITY, VERY MOIST	CL	.25	PID=0 ppm BΓ=50 cpm
5.0	113825	06/23/93 14:50	4		6		SAA, MEDIUM STIFF, TRACE YELLOW MOTTLES, MOIST	CL	.75	PID=0 ppm BΓ=70 cpm
5.5	113826	06/23/93 14:50	6		6		SAA, STIFF	CL	1.5	PID=0 ppm BΓ=70 cpm
6.0	113827	06/23/93 14:50	4		3		MEDIUM STIFF, SAA	CL	.75	PID=0 ppm BΓ=70 cpm
6.5	113828	06/23/93 15:04	5		6		SAA	CL	.75	PID=0 ppm BΓ=70 cpm

NOTES:

Boring Contractor: PENNSYLVANIA DRILLING CO.
Driller: RON CONNERS

SAA = Same as Above
PID = Photoionization Detector
N/A = Not Applicable

1227

PROJECT NUMBER: 20.03.05	PROJECT NAME: CRU2 RI PHASE II FIELD INVESTIGATION	
BORING NUMBER: 11032	COORDINATES: NORTH 478072.47 EAST 1379787.13	DATE:25-JUN-93
GROUND ELEVATION: 577.07	GWL: Depth Date/Time	DATE STARTED: 25-JUN-93
ENGINEER/GEOLOGIST: B E MULLER	Depth Date/Time	DATE COMPLETE: 25-JUN-93
DRILLING METHOD: HOLLOW STEM AUGER		

DEPTH	SAMPLE	DATE TIME	BLOWS ON	SAMPLE	RECOVERY	INCHES		USCS SYMBOL	TSF	REMARKS
6.5 7.0	113829 06/23/93 15:04		10		6		SAA, VERY STIFF INCREASE SILT	CL	3	PID=0 ppm BG=70 cpm
7.0 7.5	113830 06/23/93 15:04		12		6		SAA, STIFF LAST 2 INCES: (2.5Y, 6/4) OLIVE YELLOW, SILTY SAND, WET	CL	1.75	PID=0 ppm BG=70 cpm
7.5 8.0	113831 06/23/93 15:13		5		6		STIFF (2.5Y, 5/6) LIGHT OLIVE BROWN, SILTY CLAY, MEDIUM PLASTICITY, MOIST, 2 IN FINE WET SAND	CL	1.25	PID=0 ppm BG=60 cpm
8.0 8.5	113832 06/23/93 15:13		5		6		SAA	CL	2	PID=0 ppm BG=60 cpm
8.5 9.0	113833 06/23/93 15:13		5		6		MEDIUM DENSE (2.5Y, 5/4) LIGHT OLIVE BROWN, SILTY SAND, WET	SM	N/A	PID=0 ppm BG=60 cpm
9.0 9.5	113834 06/24/93 08:45		4		6		0-3 IN SAA/3-6 IN SOFT (2.5Y, 5/6) LIGHT OLIVE BROWN, SANDY, SILTY CLAY, LOW PLASTICITY, MOIST	SM CL	.25	PID=0 ppm BG=50 cpm
9.5 10.0	113835 06/24/93 08:45		5		6		STIFF, SAA	CL	1.25	PID=0 ppm BG=50 cpm
10.0 10.5	113836 06/24/93 08:45		9		6		STIFF, SAA, LOW MOIST	CL	1.50	PID=0 ppm BG=50 cpm
10.5 11.0	113837 06/24/93 08:59		4		6		MEDIUM, DENSE (2.5Y, 5/4) LIGHT OLIVE BROWN, CLAYEY, SANDY SILT WET	ML	N/A	PID=0 ppm BG=80 cpm
11.0 11.5	113838 06/24/93 08:59		10		6		STIFF (2.5Y, 5/4) LIGHT OLIVE BROWN, SANDY, SILTY CLAY, MEDIUM PLASTICITY, MOIST	CL	1	PID=0 ppm BG=80 cpm
11.5 12.0	113839 06/24/93 08:59		11		6		MEDIUM DENSE (2.5Y, 5/2) GRAYISH BROWN, CLAYEY SILTY SAND, LOW PLASTICITY, VERY MOIST	SM	1.25	PID=0 ppm BG=80 cpm
12.0 12.5	113840 06/24/93 09:10		4		6		SAA	SM	N/A	PID=0 ppm BG=120 cpm
12.5 13.0	113841 06/24/93 09:10		12		6		STIFF (2.5Y, 5/2) GRAYISH BROWN CLAY, MEDIUM PLASTICITY, MOIST-1IN WET SAND AT BOTTOM	CL	1.5	PID=0 ppm BG=120 cpm

NOTES:

Boring Contractor: PENNSYLVANIA DRILLING CO.
Driller: RON CONNERS

SAA = Same as Above
PID = Photoionization Detector
N/A = Not Applicable

1228

51744

PROJECT NUMBER: 20.03.05	PROJECT NAME: CRU2 RI PHASE II FIELD INVESTIGATION	
BORING NUMBER: 11032	COORDINATES: NORTH 478072.47 EAST 1379787.13	DATE:25-JUN-93
GROUND ELEVATION: 577.07	GWL: Depth Date/Time	DATE STARTED: 25-JUN-93
ENGINEER/GEOLOGIST: B E MULLER	Depth Date/Time	DATE COMPLETE: 25-JUN-93
DRILLING METHOD: HOLLOW STEM AUGER		

DEPTH	SAMPLE	DATE TIME	BLOWS ON SAMPLE	RECOVERY INCHES		USCS SYMBOL	TSF	REMARKS
13.0 13.5		06/24/93 09:10	11	0	NO RECOVERY	N/A	N/A	
13.5 14.0	113842	06/24/93 09:20	4	6	VERY STIFF (5Y, 4/3) OLIVE, SILTY CLAY, TRACE FINE SAND, LOW PLASTICITY, VERY MOIST	CL	.25	PID=.5 ppm BΓ=50 cpm
14.0 14.5	113843	06/24/93 09:20	10	6	SAA	CL	.25	PID=.5 ppm BΓ=50 cpm
14.5 15.0	113844	06/24/93 09:20	10	6	SAA, 0.5 IN. COARSE SAND SEAM AT 5 IN	CL	1.25	PID=.5 ppm BΓ=50 cpm

NOTES:

Boring Contractor: PENNSYLVANIA DRILLING CO.
Driller: RON CONNERS

SAA = Same as Above
PID = Photoionization Detector
N/A = Not Applicable

1229

PROJECT NUMBER: 20.03.05	PROJECT NAME: CRU2 RI PHASE II FIELD INVESTIGATION	
BORING NUMBER: 11082	COORDINATES: NORTH 477930.33 EAST 1379957.13	DATE:03-JUN-93
GROUND ELEVATION: 576.9	GWL: Depth Date/Time	DATE STARTED: 03-JUN-93
ENGINEER/GEOLOGIST: A COMMO	Depth Date/Time	DATE COMPLETE: 03-JUN-93
DRILLING METHOD: HOLLOW STEM AUGER		

DEPTH	SAMPLE DATE TIME	BLOWS ON SAMPLE	RECOVERY INCHES		USCS SYMBOL	TSF	REMARKS
5.0	06/03/93 00:00	N/A	N/A	SEE COMMENT	N/A	N/A	
5.0 5.5	113680 113681 113682 06/03/93 08:25	4	6	VERY STIFF, (2.5Y, 5/6) LIGHT OLIVE BROWN, SILTY CLAY, MOTTLING, LOW PLASTICSITY, DRY, SOME (5Y, 5/1) GRAY, SILTY CLAY	CL	3.0	PID=1.1 ppm βΓ=80 cpm
5.5 6.0	113680 113681 113682 06/03/93 08:25	7	6	SAA	CL	3.0	PID=1.1 ppm βΓ=80 cpm
6.0 6.5	113680 113681 113682 06/03/93 08:25	15	3	SAA	CL	3.0	PID=1.1 ppm βΓ=80 cpm
6.5 7.0	113683 113684 06/03/93 08:30	6	6	MEDIUM DENSE, (2.5Y, 5/6) LIGHT OLIVE BROWN, CLAYEY SILT, MOIST	ML	N/A	PID=0.6 ppm βΓ=20-60 cpm
7.0 7.5	113683 113684 06/03/93 08:30	7	6	SAA	ML	N/A	PID=0.6 ppm βΓ=20-60 cpm
7.5 8.0	06/03/93 08:30	9	0	NO RECOVERY (INFERRED FROM BORING LOG)	N/A	N/A	
8.0 8.5	113685 113686 113687 06/03/93 08:35	4	6	MEDIUM DENSE, (2.5Y, 5/4) LIGHT OLIVE BROWN, CLAYEY SILT, FEW SMALL PIECES OF GRAVEL, IRON STAINING, MOIST	ML	N/A	PID=0.6 ppm βΓ=20-60 cpm
8.5 9.0	113685 113686 113687 06/03/93 08:35	7	6	SAA	ML	N/A	PID=0.6 ppm βΓ=20-60 cpm
9.0 9.5	113685 113687 113686 06/03/93 08:35	9	6	SAA	ML	N/A	PID=0.6 ppm βΓ=20-60 cpm

NOTES:
DRILLED SAMPLED TO 12.5. PUSHED HYDROPUNCH TO 13 FT. PULLED BACK 4 FTL AND COLLECTED TOTAL U WATER SAMPLE

Boring Contractor: PENNSYLVANIA DRILLING CO
Driller: MIKE BENTLY

SAA = Same as Above
PID = Photoionization Detector
N/A = Not Applicable

PROJECT NUMBER: 20.03.05	PROJECT NAME: CRU2 RI PHASE II FIELD INVESTIGATION	
BORING NUMBER: 11082	COORDINATES: NORTH 477930.33 EAST 1379957.13	DATE:03-JUN-93
GROUND ELEVATION: 576.9	GWL: Depth Date/Time	DATE STARTED: 03-JUN-93
ENGINEER/GEOLOGIST: A COMMO	Depth Date/Time	DATE COMPLETE: 03-JUN-93
DRILLING METHOD: HOLLOW STEM AUGER		

DEPTH	SAMPLE DATE TIME	BLOWS ON SAMPLE	RECOVERY INCHES		USCS SYMBOL	TSF	REMARKS
9.5 10.0	113688 113690 113689 06/03/93 08:45	10	6	VERY STIFF, (2.5Y, 5/4) LIGHT OLIVE BROWN, SILTY CLAY, LOW PLASTICITY, FEW SMALL PIECES OF GRAVEL, IRON STAINING, DRY	CL	3.5	PID=1.3 ppm BΓ=20-60 cpm
10.0 10.5	113688 113689 113690 06/03/93 08:45	10	6	SAA	CL	3.5	PID=1.3 ppm BΓ=20-60 cpm
10.5 11.0	113688 113689 113690 06/03/93 08:45	14	6	SAA	CL	3.5	PID=1.3 ppm BΓ=20-60 cpm
11.0 11.2	113682 113691 06/03/93 08:55	7	6	SAA	CL	3.5	PID=0.6 ppm BΓ=20-60 cpm
11.2 11.5	113691 113692 06/03/93 08:55	5	6	MEDIUM DENSE, (2.5Y, 5/4) LIGHT OLIVE BROWN, SILTY WELL GRADED FINE SAND, MOIST	SM	N/A	PID=0.6 ppm BΓ=20-60 cpm
11.5 12.5	113691 113692 06/03/93 08:55	9	0	VERY STIFF, (5Y, 5/1) GRAY, SILTY CLAY, MEDIUM PLASTICITY, FEW SMALL PIECES OF GRAVEL, DRY	CL	3.5	

NOTES:
DRILLED SAMPLED TO 12.5. PUSHED HYDROPUNCH TO 13 FT. PULLED BACK 4 FTL AND COLLECTED TOTAL U WATER SAMPLE

Boring Contractor: PENNSYLVANIA DRILLING CO
Driller: MIKE BENTLY

SAA = Same as Above
PID = Photoionization Detector
N/A = Not Applicable

PROJECT NUMBER: 20.03.05	PROJECT NAME: CRU2 RI PHASE II FIELD INVESTIGATION	
BORING NUMBER: 11083	COORDINATES: NORTH 477837.97 EAST 1379981.71	DATE:02-JUN-93
GROUND ELEVATION: 576.2	GWL: Depth Date/Time	DATE STARTED: 02-JUN-93
ENGINEER/GEOLOGIST: A COMO	Depth Date/Time	DATE COMPLETE: 02-JUN-93
DRILLING METHOD: 4'/4" HOLLOW STEM AUGER		

DEPTH	SAMPLE DATE TIME	BLOWS ON SAMPLE	RECOVERY INCHES		USCS SYMBOL	TSF	REMARKS
5.0	06/02/93 00:00	N/A	N/A	SEE COMMENT	N/A	N/A	
5.0 5.5	113666 06/02/93 08:55	2	6	VERY STIFF, (2.5Y, 5/5) OLIVE YELLOW, SILTY CLAY, SOME (2.5Y, 5/0) GRAY, CLAY, LOW PLASTICITY, FEW PIECES OF SAMALL GRAVEL, DRY	CL	2.5	PID=0.3 ppm BΓ=20-60 cpm
5.5 6.0	113666 06/02/93 08:55	4	0	NO RECOVERY (INFERRED FROM BORING LOG)	N/A	N/A	
6.0 6.5	113666 06/02/93 08:55	5	0	NO RECOVERY	N/A	N/A	
6.5 7.0	113667 113668 113669 06/02/93 09:05	7	6	SAA, SOME THIN WELL GRADED SAND LENSES, DRY	CL	3.5	PID=0.0 ppm BΓ=20-60 cpm
7.0 7.5	113667 113668 113669 06/02/93 09:05	12	6	SAA	CL	3.5	PID=0.0 ppm BΓ=20-60 cpm
7.5 8.0	113667 113668 113669 06/02/93 09:05	14	6	MEDIUM DENSE, (2.5Y, 5/4) LIGHT OLIVE BROWN, CLAYEY SILT NO PLASTICITY, MOIST	ML	N/A	PID=0.0 ppm BΓ=20-60 cpm
8.0 8.5	113670 113671 113672 06/02/93 09:10	8	6	MEDIUM DENSE, (2.5Y, 5/4) LIGHT OLIVE BROWN, CLAYEY SILT, SLIGHT PLASTICITY, FEW SMALL PIECES OF GRAVEL, MOIST	ML	N/A	PID=0.0 ppm BΓ=20-60 cpm
8.5 9.0	113670 113671 113672 06/02/93 09:10	7	6	SAA	ML	N/A	PID=0.0 ppm BΓ=20-60 cpm
9.0 9.5	113670 113671 113672 06/02/93 09:10	8	6	SAA	ML	N/A	PID=0.0 ppm BΓ=20-60 cpm

NOTES:
SOIL BORING SAMPLES COLLECTED FROM 5 TO 12.5 PUSHED HYDROPUNCH TO 13

Driller: M BENTLEY, R CONNORS

SAA = Same as Above
PID = Photoionization Detector
N/A = Not Applicable

1232

PROJECT NUMBER: 20.03.05	PROJECT NAME: CRU2 RI PHASE II FIELD INVESTIGATION	
BORING NUMBER: 11083	COORDINATES: NORTH 477837.97 EAST 1379981.71	DATE:02-JUN-93
GROUND ELEVATION: 576.2	GWL: Depth Date/Time	DATE STARTED: 02-JUN-93
ENGINEER/GEOLOGIST: A COMO	Depth Date/Time	DATE COMPLETE: 02-JUN-93
DRILLING METHOD: 4'/4" HOLLOW STEM AUGER		

DEPTH	SAMPLE	DATE TIME	BLOWS ON SAMPLE	RECOVERY INCHES		USCS SYMBOL	TSF	REMARKS
9.5 10.0	113673 113674 113675	06/02/93 09:15	5	6	SAA	ML	N/A	PID=0.0 ppm BΓ=20-60 cpm
10.0 10.5	113673 113674 113675	06/02/93 09:15	9	6	VERY STIFF, (5Y, 5/3) OLIVE WITH SOME (2.5Y, 5/6) LIGHT OLIVE BROWN, SILTY CLAY, SLIGHT PLASTICITY, DRY, FEW PIECES OF SMALL GRAVEL	CL	4.0	PID=0.0 ppm BΓ=20-60 cpm
10.5 11.0	113673 113674 113675	06/02/93 09:15	12	6	SAA	CL	4.0	PID=0.0 ppm BΓ=20-60 cpm
11.0 11.5	113676 113677 113678	06/02/93 09:25	9	6	VERY STIFF, (5Y, 5/1) GRAY, SILTY CLAY, FEW PIECES OF GRAVEL, LOW PLASTICITY, DRY	CL	4.0	PID=0.0 ppm BΓ=20-60 cpm
11.5 12.0	113676 113677 113678	06/02/93 09:25	10	6	SAA	CL	4.0	PID=0.0 ppm BΓ=20-60 cpm
12.0 12.5	113676 113677 113678	06/02/93 09:25	13	6	SAA	CL	4.0	PID=0.0 ppm BΓ=20-60 cpm

NOTES:
SOIL BORING SAMPLES COLLECTED FROM 5 TO 12.5 PUSHED HYDROPUNCH TO 13

Driller: M BENTLEY, R CONNORS

SAA = Same as Above
PID = Photoionization Detector
N/A = Not Applicable

PROJECT NUMBER: 20.03.05	PROJECT NAME: CRU2 RI PHASE II FIELD INVESTIGATION	
BORING NUMBER: 11084	COORDINATES: NORTH 477808.02 EAST 1379901.44	DATE:01-JUN-93
GROUND ELEVATION: 577.1	GWL: Depth Date/Time	DATE STARTED: 01-JUN-93
ENGINEER/GEOLOGIST: A COMO	Depth Date/Time	DATE COMPLETE: 01-JUN-93
DRILLING METHOD: 4 1/4" HOLLOW STEM AUGER		

DEPTH	SAMPLE	DATE TIME	BLOWS ON	SAMPLE	RECOVERY	INCHES		USCS SYMBOL	TSF	REMARKS
5.0		06/01/93 00:00	N/A		N/A		SEE COMMENT	N/A	N/A	
5.0 5.5	113272 113273 113274	06/01/93 11:10	4		6		STIFF, (2.5Y, 5/6) LIGHT OLIVE BROWN, SILTY CLAY, LOW PLASTICITY, DRY	CL	1.0	PID=0.0 ppm BΓ=20-60 cpm
5.5 6.0	113272 113273 113274	06/01/93 11:10	7		6		VERY STIFF, (2.5Y, 5/6) LIGHT OLIVE BROWN, SILTY CLAY, SOME (5Y, 6/1) GRAY, SILTY CLAY, NO PLASTICITY, DRY	CL	4.0	PID=0.0 ppm BΓ=20-60 cpm
6.0 6.5	113272 113273 113274	06/01/93 11:10	9		6		SAA	CL	4.0	PID=0.0 ppm BΓ=20-60 cpm
6.5 7.0	113275	06/01/93 11:20	4		6		VERY STIFF, (2.5Y, 5/6) LIGHT OLIVE BROWN, SILTY CLAY WITH SOME (5Y, 6/1) GRAY, SILTY CLAY, SOME (5Y, 8/2), WHITE, SILTY CLAY, SLIGHT PLASTICITY, DRY	CL	4.0	PID=0.0 ppm BΓ=20-60 cpm
7.0 7.5	113275 113276	06/01/93 11:20	5		6		SAA	CL	4.0	PID=0.0 ppm BΓ=20-60 cpm
7.5 8.0		06/01/93 11:20	7		0		NO RECOVERY	N/A	N/A	
8.0 8.5	113277 113278 113279	06/01/93 11:25	3		6		STIFF, (2.5Y, 5/4) LIGHT OLIVE BROWN, SILTY CLAY, (SOME THIN WET VERY FINE SAND LENSES), LOW PLASTICITY, MOIST	CL	1.5	PID=0.0 ppm BΓ=20-60 cpm
8.5 9.0	113277 113278 113279	06/01/93 11:25	5		6		SAA	CL	1.5	PID=0.0 ppm BΓ=20-60 cpm
9.0 9.5	113277 113278 113279	06/01/93 11:25	9		6		SAA	CL	1.5	PID=0.0 ppm BΓ=140 cpm

NOTES:
SOIL BORING THEN PUSHED HYDROPUNCH

Boring Contractor: PENNSYLVANIA DRILLING CO.
Driller: MIKE BENTLY

SAA = Same as Above
PID = Photoionization Detector
N/A = Not Applicable

1234

5174

PROJECT NUMBER: 20.03.05	PROJECT NAME: CRU2 RI PHASE II FIELD INVESTIGATION	
BORING NUMBER: 11084	COORDINATES: NORTH 477808.02 EAST 1379901.44	DATE:01-JUN-93
GROUND ELEVATION: 577.1	GWL: Depth Date/Time	DATE STARTED: 01-JUN-93
ENGINEER/GEOLOGIST: A COMO	Depth Date/Time	DATE COMPLETE: 01-JUN-93
DRILLING METHOD: 4 1/4" HOLLOW STEM AUGER		

DEPTH	SAMPLE	DATE TIME	BLOWS ON	SAMPLE	RECOVERY	INCHES		USCS SYMBOL	TSF	REMARKS
9.5 10.0	113280 113281 113282	06/01/93 13:00	5		6		MEDIUM DENSE, (2.5Y, 5/4) LIGHT OLIVE BROWN, SILT, SOKME CLAY, NO PLASTICITY, WET	ML	N/A	PID=0.0 ppm BΓ=20-60 cpm
10.0 10.5	113280 113281 113282	06/01/93 13:00	7		6		SAA	ML	N/A	PID=0.0 ppm BΓ=20-60 cpm
10.5 11.0	113280 113281 113282	06/01/93 13:00	7		6		SAA	ML	N/A	PID=0.0 ppm BΓ=20-60 cpm
11.0 11.5	113283 113284 113285	06/01/93 13:05	6		6		SAA, AT TIP OF SPLIT SPOON SOME (5Y, 5/1) GRAY, CLAY, MEDIUM PLASTICITY, MOIST	ML	N/A	PID=0.0 ppm BΓ=20-60 cpm
11.5 12.0	113283 113284 113285	06/01/93 13:05	7		6		SAA, AT TIP OF SPLIT SPOON SOME (5Y, 5/1) GRAY, CLAY, MEDIUM PLASTICITY, MOIST	ML	N/A	PID=0.0 ppm BΓ=20-60 cpm
12.0 12.5	113283 113284 113285	06/01/93 13:05	8		6		SAA, AT TIP OF SPOON SOME (5Y, 5/1) GRAY, CLAY, MEDIUM PLASTICITY, MOIST	ML	N/A	PID=0.0 ppm BΓ=20-60 cpm
12.5 13.0	113286 113287	06/01/93 13:20	7		6		VERY STIFF, (5Y, 5/1) GRAY, SILTY CLAY WITH SOME (2.5Y, 5/4) LIGHT OLIVE BROWN SILT, HIGH PLASTICITY, MOIST	CL	2.25	PID=0.0 ppm BΓ=20-60 cpm
13.0 13.5	113286 113287	06/01/93 13:20	6		6		VERY STIFF, (5Y, 5/1) GRAY, SILTY CLAY, SOME WELL GRADED SAND, MEDIUM PLASTICITY, DRY	CL	2.25	PID=0.0 ppm BΓ=20-60 cpm
13.5 14.0		06/01/93 13:20	7		0			N/A	N/A	

NOTES:
SOIL BORING THEN PUSHED HYDROPUNCH

Boring Contractor: PENNSYLVANIA DRILLING CO.
Driller: MIKE BENTLY

SAA = Same as Above
PID = Photoionization Detector
N/A = Not Applicable

1235

PROJECT NUMBER: 20.03.05	PROJECT NAME: CRU2 RI PHASE II FIELD INVESTIGATION	
BORING NUMBER: 11085	COORDINATES: NORTH 477869.01 EAST 1379926.48	DATE:28-MAY-93
GROUND ELEVATION: 577.6	GWL: Depth Date/Time	DATE STARTED: 28-MAY-93
ENGINEER/GEOLOGIST: A. COMO	Depth Date/Time	DATE COMPLETE: 28-MAY-93
DRILLING METHOD: 4 1/4 HOLLOW STEM AUGER		

DEPTH	SAMPLE	DATE TIME	BLOWS ON SAMPLE	RECOVERY	INCHES		USCS SYMBOL	TSF	REMARKS
.5	113243 113244	05/27/93 08:00	9	6		HARD, (10YR, 4/3) DARK BROWN, CLAYEY SILT, NO PLASTICITY, DRY	ML	3.0	PID=1.5 ppm BΓ=25-50 cpm
.5 1.0	113243 113244	05/27/93 08:00	12	6		SAA	ML	3.0	PID=1.5 ppm BΓ=25-50 cpm
1.0 1.5		05/27/93 08:00	20	0		NO RECOVERY (INFERRED FROM BORING LOG)	N/A	N/A	
1.5 2.0	113245	05/27/93 08:05	20	6		HARD, (5Y, 7/2) LIGHT GRAY, SILTY CLAY, NO PLASTICITY, DRY, SOME (10YR, 4/3) DARK BROWN, SILTY CLAY	CL	2.0	PID=1.5 ppm BΓ=25-50 cpm
2.0 2.5		05/27/93 08:05	20	0		NO RECOVERY (INFERED FROM BORING LOG)	N/A	N/A	
2.5 3.0		05/27/93 08:05	12	0		NO RECOVERY (INFERRED FROM BORING LOG)	N/A	N/A	
3.0 3.5	113246 113247	05/27/93 08:10	4	6		HARD, (2.5Y, 5/6) LIGHT OLIVE BROWN AND (5Y, 7/2) LIGHT GRAY, SILTY CLAY, MEDIUM PLASTICITY, DRY	CL	2.5	PID=0.4 ppm BΓ=25-50 cpm
3.5 4.0	113246 113247	05/27/93 08:10	5	6		SAA	CL	2.5	PID=0.4 ppm BΓ=25-50 cpm
4.0 4.5		05/27/93 08:10	5	0		SAA	N/A	N/A	
4.5 5.0	113248 113249 113250	05/27/93 08:15	7	6		SAA, SOME GRAVEL	CL	2.5	PID=0.4 ppm BΓ=25-50 cpm
5.0 5.5	113248 113249 113250	05/27/93 08:15	7	6		SAA	CL	2.5	PID=0.4 ppm BΓ=25-50 cpm

NOTES:

Boring Contractor: PENNSYLVANIA

SAA = Same as Above
PID = Photoionization Detector
N/A = Not Applicable

1236

5124 02/02/94 17:03

PROJECT NUMBER: 20.03.05	PROJECT NAME: CRU2 RI PHASE II FIELD INVESTIGATION	
BORING NUMBER: 11085	COORDINATES: NORTH 477869.01 EAST 1379926.48	DATE:28-MAY-93
GROUND ELEVATION: 577.6	GWL: Depth Date/Time	DATE STARTED: 28-MAY-93
ENGINEER/GEOLOGIST: A. COMO	Depth Date/Time	DATE COMPLETE: 28-MAY-93
DRILLING METHOD: 4 1/4 HOLLOW STEM AUGER		

DEPTH	SAMPLE	DATE TIME	BLOWS ON	SAMPLE	RECOVERY	INCHES		USCS SYMBOL	TSF	REMARKS
5.5 6.0	113248 113249 113250	05/27/93 08:15	10		6		SAA	CL	2.5	PID=0.4 ppm BG=25-50 cpm
6.0 6.5	113251 113252 113253	05/27/93 08:35	6		6		HARD, (2.5Y, 5/4) LIGHT OLIVE BROWN, SILTY CLAY, SOME (5Y, 7/2) LIGHT GRAY, SILTY CLAY, MEDIUM PLASTICITY, DRY	CL	3.5	PID=0.4 ppm BG=25-50 cpm
6.5 7.0	113251 113252 113253	05/27/93 08:35	7		6		SAA	CL	3.5	PID=0.4 ppm BG=25-50 cpm
7.0 7.5	113251 113252 113253	05/27/93 08:35	8		2		SAA	CL	3.5	PID=0.4 ppm BG=25-50 cpm
7.5 8.0	113254 113255 113256	05/27/93 08:40	16		6		HARD, (10YR, 6/2) LIGHT BROWNISH GRAY, AND (10 YR, 5/6) YELLOWISH BROWN, SILTY CLAY, DRY	CL	3.5	PID=0.4 ppm BG=25-50 cpm
8.0 8.5	113254 113255 113256	05/27/93 08:40	10		6		SAA	CL	3.5	PID=0.4 ppm BG=25-50 cpm
8.5 9.0	113254 113256 113255	05/27/93 08:40	10		6		MEDIUM DENSE, (10YR,6/3) LIGHT BROWNISH GRAY, AND (10YR, 5/6) YELLOWISH BROWN, CLAYEY SILT, DRY	ML	N/A	PID=.4 ppm BG=25-50 cpm
9.0 9.5	113257 113258 113259	05/27/93 08:50	7		6		HARD, (2.5Y, 6/6) OLIVE YELLOW, SILTY CLAY, SLIGHT PLASTICITY, SOME (5Y, 6/1) GRAY, SILTY CLAY, DRY	CL	2.5	PID=0.4 ppm BG=25-50 cpm
9.5 10.0	113257 113258 113259	05/27/93 08:50	10		6		SAA	CL	2.5	PID=0.4 ppm BG=25-50 cpm

NOTES:

Boring Contractor: PENNSYLVANIA

SAA = Same as Above
PID = Photoionization Detector
N/A = Not Applicable

1237

PROJECT NUMBER: 20.03.05	PROJECT NAME: CRU2 RI PHASE II FIELD INVESTIGATION	
BORING NUMBER: 11085	COORDINATES: NORTH 477869.01 EAST 1379926.48	DATE:28-MAY-93
GROUND ELEVATION: 577.6	GWL: Depth Date/Time	DATE STARTED: 28-MAY-93
ENGINEER/GEOLOGIST: A. COMO	Depth Date/Time	DATE COMPLETE: 28-MAY-93
DRILLING METHOD: 4 1/4 HOLLOW STEM AUGER		

DEPTH	SAMPLE	DATE TIME	BLOWS ON SAMPLE	RECOVERY INCHES		USCS SYMBOL	TSF	REMARKS
10.0 10.5	113257 113258 113259	05/27/93 08:50	12	6	SAA	CL	2.5	PID=0.4 ppm BΓ=25-50 cpm
10.5 11.0	113260 113261 113262	05/27/93 08:55	16	6	HARD, (2.5Y, 5/4) LIGHT OLIVE BROWN, SILTY CLAY, MEDIUM PLASTICITY, SMALL GRAVEL, MOIST	CL	3.5	PID=0.4 ppm BΓ=25-50 cpm
11.0 11.5	113260 113261 113262	05/27/93 08:55	23	6	SAA	CL	3.5	PID=0.4 ppm BΓ=25-50 cpm
11.5 12.0	113260 113261 113262	05/27/93 08:55	24	6	SAA	CL	3.5	PID=0.4 ppm BΓ=25-50 cpm
12.0 12.5	113263 113264 113265	05/27/93 09:20	12	6	DENSE, (2.5Y, 5/4) LIGHT OLIVE BROWN, SILT, SOME SMALL GRAVEL, WET	ML	N/A	PID=0.4 ppm BΓ=25-50 cpm
12.5 13.0	113263 113264 113265	05/27/93 09:20	15	6	DENSE, (2.5Y, 5/4) LIGHT OLIVE BROWN, WELL GRADED SAND, WET	SW	N/A	PID=0.4 ppm BΓ=25-50 cpm
13.0 13.5	113263 113264 113265	05/27/93 09:20	15	6	SAA	SW	N/A	PID=0.4 ppm BΓ=25-50 cpm
13.5 14.0	113266 113267 113268	05/27/93 09:25	12	6	DENSE, (2.5Y, 5/4) LIGHT OLIVE BROWN, WELL GRADED SAND, SOME SILTY CLAY, WET	SW	N/A	PID=0.4 ppm BΓ=25-50 cpm
14.0 14.5	113266 113267 113268	05/27/93 09:25	20	6	SAA	SW	N/A	PID=0.4 ppm BΓ=25-50 cpm

NOTES:

Boring Contractor: PENNSYLVANIA

SAA = Same as Above
PID = Photoionization Detector
N/A = Not Applicable

1238

PROJECT NUMBER: 20.03.05	PROJECT NAME: CRU2 RI PHASE II FIELD INVESTIGATION	
BORING NUMBER: 11085	COORDINATES: NORTH 477869.01 EAST 1379926.48	DATE:28-MAY-93
GROUND ELEVATION: 577.6	GWL: Depth Date/Time	DATE STARTED: 28-MAY-93
ENGINEER/GEOLOGIST: A. COMO	Depth Date/Time	DATE COMPLETE: 28-MAY-93
DRILLING METHOD: 4 1/4 HOLLOW STEM AUGER		

DEPTH	SAMPLE	DATE TIME	BLOWS ON	SAMPLE	RECOVERY	INCHES		USCS SYMBOL	TSF	REMARKS
14.5 15.0	113266 113267 113268	05/27/93 09:25	21		6		SAA	SW	N/A	PID=0.4 ppm BΓ=25-50 cpm
15.0 15.5	113269 113270 113271	05/27/93 09:40	10		6		FIRM, (2.5Y, 5/4) LIGHT OLIVE BROWN, SILTY CLAY, MEDIUM PLASTICITY, MOIST	CL	1.5	PID=0.4 ppm BΓ=25-50 cpm
15.5 16.0	113269 113270 113271	05/27/93 09:40	15		6		FIRM, (5Y, 5/1) GRAY, SILTY CLAY, SOME (10YR, 5/4) YELLOW BROWN, SILTY CLAY, NO PLASTICITY, SOME WELL GRADED (5Y, 5/1) GRAY, FINE SAND, DRY	CL	1.5	PID=0.4 ppm BΓ=25-50 cpm
16.0 16.5	113269 113270 113271	05/27/93 09:40	13		6		SAA	CL	1.5	PID=0.4 ppm BΓ=25-50 cpm

NOTES:

Boring Contractor: PENNSYLVANIA

SAA = Same as Above
PID = Photoionization Detector
N/A = Not Applicable

1239

5174

PROJECT NUMBER: 20.03.05	PROJECT NAME: CRU2 RI PHASE II FIELD INVESTIGATION	
BORING NUMBER: 11186	COORDINATES: NORTH 478010.24 EAST 1379587.91	DATE:12-APR-93
GROUND ELEVATION: 576.6	GWL: Depth Date/Time	DATE STARTED: 12-APR-93
ENGINEER/GEOLOGIST: J BOYER	Depth Date/Time	DATE COMPLETE: 12-APR-93
DRILLING METHOD: AUGER		

DEPTH	SAMPLE	DATE TIME	BLOWS ON SAMPLE	RECOVERY	INCHES		USCS SYMBOL	TSF	REMARKS
.5	112500	04/12/93 10:30	6	6		DENSE, (2.5Y, 4/4) OLIVE BROWN, CLAYEY SILT, MOIST, SLIGHTLY PLASTIC	ML	N/A	PID=1 ppm BΓ=80 cpm
1.0	112501	04/12/93 10:30	10	6		SAA	ML	N/A	PID=1 ppm BΓ=80 cpm
1.5	112502	04/12/93 10:30	25	2		DENSE, (2.5Y, 5/6) LIGHT OLIVE BROWN, CLAYEY SILT WITH GRAVEL, COBBLE SIZE TO COARSE SAND, MOIST	ML	N/A	PID=1 ppm BΓ=80 cpm
2.0	112503	04/12/93 10:45	28	6		DENSE, (2.5Y, 5/4) LIGHT OLIVE BROWN, SILTY GRAVEL, COBBLES TO COARSE SAND, MOIST, ODOR (METHANE) STAINED BLUE GREEN	GM	N/A	PID=5 ppm BΓ=80 cpm
2.5		04/12/93 00:00	9	0		NO RECOVERY (INFERRED FROM BORING LOG)	N/A	N/A	
3.0		04/12/93 00:00	21	0		NO RECOVERY (INFERRED FROM BORING LOG)	N/A	N/A	
3.5	112504	04/12/93 10:55	10	6		MEDIUM LOOSE, (2.5Y, 4/3) OLIVE BROWN, CLAYEY SILT WITH GRAVEL, PEBBLES TO COARSE, SLIGHTLY PLASTICITY, MOIST	ML	N/A	PID=1 ppm BΓ=60 cpm
4.0	112505	04/12/93 10:55	11	6		STIFF, (2.5Y, 5/6) LIGHT OLIVE BROWN, SILTY CLAY, MEDIUM PLASTICITY, MOIST	CL	2.0	PID=1 ppm BΓ=60 cpm
4.5	112506	04/12/93 10:55	15	6		SAA	CL	2.0	PID=1 ppm BΓ=60 cpm
5.0	112507	04/12/93 14:15	5	6		MEDIUM DENSE, (2.5Y, 5/4) LIGHT OLIVE BROWN, SILTY SAND WITH CLAY, LOW PLASTLICITY, MOIST	SM	N/A	PID=1 ppm BΓ=60 cpm
5.5	112507	04/12/93 14:15	3	6		SAA	SM	N/A	PID=1 ppm BΓ=60 cpm
6.0	112507	04/12/93 14:15	5	6		SAA	SM	N/A	PID=1 ppm BΓ=60 cpm
6.5	112507	04/12/93 14:15	8	5		SAA	SM	N/A	PID=1 ppm BΓ=60 cpm

NOTES:

Boring Contractor: PENNSYLVANIA DRILLING
Driller: JOE RAAB, ROGER DAVIS
Drilling Equipment: SKID RIG CME 45

SAA = Same as Above
PID = Photoionization Detector
N/A = Not Applicable

1240

5174

PROJECT NUMBER: 20.03.05	PROJECT NAME: CRU2 RI PHASE II FIELD INVESTIGATION	
BORING NUMBER: 11186	COORDINATES: NORTH 478010.24 EAST 1379587.91	DATE:12-APR-93
GROUND ELEVATION: 576.6	GWL: Depth Date/Time	DATE STARTED: 12-APR-93
ENGINEER/GEOLOGIST: J BOYER	Depth Date/Time	DATE COMPLETE: 12-APR-93
DRILLING METHOD: AUGER		

DEPTH	SAMPLE	DATE TIME	BLOWS ON SAMPLE	RECOVERY INCHES		USCS SYMBOL	TSF	REMARKS
6.5 7.0	112508 04/12/93 14:30	8	6	MEDIUM DENSE, (2.5Y, 5/6) LIGHT OLIVE BROWN, SILTY SAND WITH CLAY, LOW PLASTICITY, MOIST		ML	N/A	PID=1 ppm βΓ=60 cpm
7.0 7.5	112509 04/12/93 14:30	10	6	STIFF, (2.5Y, 5/6) LIGHT OLIVE BROWN, SILTY CLAY, MEDIUM PLASTICITY, WET		CL	2.0	PID=1 ppm βΓ=60 cpm
7.5 8.0	112510 04/12/93 14:30	14	6	SAA		CL	2.0	PID=1 ppm βΓ=60 cpm
8.0 8.5	112511 04/12/93 14:45	5	6	VERY STIFF, (2.5Y, 5/4) LIGHT OLIVE BROWN, SILTY CLAY, LOW PLASTICILTY, MOIST		CL	3.5	PID=1 ppm βΓ=60 cpm
8.5 9.0	112512 04/12/93 14:45	8	6	SAA		CL	3.0	PID=1 ppm βΓ=60 cpm
9.0 9.5	112513 04/12/93 14:45	16	6	VERY STIFF, (2.5Y, 5/4) LIGHT OLIVE BROWN, SILTY CLAY, LOW PLASTICITY, SLIGHTLY MOIST		CL	3.0	PID=1 ppm βΓ=60 cpm
9.5 10.0	112514 04/12/93 15:00	3	6	MEDIUM DENSE, (2.5Y, 5/6) LIGHT OLIVE BROWN, CLAYEY SILT WITH GRAVEL, MOIST		ML	N/A	PID=1 ppm βΓ=60 cpm
10.0 10.5	112514 04/12/93 15:00	5	6	MEDIUM DENSE, (2.5Y, 5/6) LIGHT OLIVE BROWN, SILTY SAND WITH GRAVEL, MOIST		SM	N/A	PID=1 ppm βΓ=60 cpm
10.5 11.0	112514 04/12/93 15:00	7	6	SAA		SM	N/A	PID=1 ppm βΓ=60 cpm
11.0 11.5	112514 04/12/93 15:00	8	6	SAA		SM	N/A	PID=1 ppm βΓ=60 cpm
11.5 12.0	112515 04/12/93 15:20	9	6	SAA		SM	N/A	PID=1 ppm βΓ=60 cpm
12.0 12.5	112516 04/12/93 15:20	8	6	MEDIUM DENSE, (2.5Y, 5/6) LIGHT OLIVE BROWN, SILTY SAND WITH GRAVEL, WET		SM	N/A	PID=1 ppm βΓ=60 cpm

NOTES:

Boring Contractor: PENNSYLVANIA DRILLING
Driller: JOE RAAB, ROGER DAVIS
Drilling Equipment: SKID RIG CME 45

SAA = Same as Above
PID = Photoionization Detector
N/A = Not Applicable

1241

PROJECT NUMBER: 20.03.05	PROJECT NAME: CRU2 RI PHASE II FIELD INVESTIGATION	
BORING NUMBER: 11187	COORDINATES: NORTH 477905.01 EAST 1379630.25	DATE:13-APR-93
GROUND ELEVATION: 580.5	GWL: Depth Date/Time	DATE STARTED: 13-APR-93
ENGINEER/GEOLOGIST: J BOYER	Depth Date/Time	DATE COMPLETE: 13-APR-93
DRILLING METHOD: AUGER		

DEPTH	SAMPLE	DATE TIME	BLOWS ON	SAMPLE	RECOVERY	INCHES		USCS SYMBOL	TSF	REMARKS
2.0	112518	04/13/93 10:10	N/A		N/A		PUSHED SHELBY TUBE	N/A	N/A	
2.0 2.5	112519	04/13/93 10:30	5		6		SOFT, (2.5Y, 4/3) OLIVE BROWN, SILTY FINE SAND, LOW PLASTICITY, MOIST. BLACK FRAGMENTS PRESENT	ML	0.5	PID=1 ppm ßΓ=50 cpm
2.5 3.0	112519	04/13/93 10:30	6		6		MEDIUM STIFF, (2.5Y, 4/3) OLIVE BROWN, SILTY CLAY, LOW PLASTICITY, MOIST, SOME GRAVEL	CL	1	PID=1 ppm ßΓ=50 cpm
3.0 3.5	112519	04/13/93 10:30	12		6		VERY STIFF, (2.5Y, 4/3) OLIVE BROWN, SILTY CLAY, LOW PLASTICITY, MOIST, SOME GRAVEL	CL	3	PID=1 ppm ßΓ=50 cpm
3.5 4.0		04/13/93 10:30	13		0		NO RECOVERY	N/A	N/A	
4.0 4.5	112520	04/13/93 10:35	5		6		VERY STIFF, (2.5Y, 5/4) LIGHT OLIVE BROWN, SILTY CLAY, LOW PLASTICITY, MOIST, GRAVELS, PRESENT	CL	3.0	PID=1 ppm ßΓ=200 cpm
4.5 5.0	112520	04/13/93 10:35	8		6		SOFT, (2.5Y, 4/3) OLIVE BROWN, SILTY FINE SAND, LOW PLASTICITY, MOIST, GRAVELS, PRESENT	ML	.5	PID=1 ppm ßΓ=200 cpm
5.0 5.5	112520	04/13/93 10:35	10		4		VERY STIFF, (2.5Y, 5/4) LIGHT OLIVE BROWN, SILTY CLAY, SLIGHTLY PLASTIC, MOIST, GRAVELS	CL	3	PID=1 ppm ßΓ=200 cpm
5.5 6.0		04/13/93 10:35	11		0		NO RECOVERY	N/A	N/A	
6.0 6.5	112521	04/13/93 10:45	7		6		VERY STIFF, (2.5Y, 5/4) LIGHT OLIVE BROWN, SILTY CLAY, SLIGHTLY PLASTIC, MOIST	CL	3.0	PID=1 ppm ßΓ=150 cpm
6.5 7.0	112522	04/13/93 10:45	14		6		SAA	CL	3.0	PID=1 ppm ßΓ=150 cpm
7.0 7.5	112523	04/13/93 10:45	18		6		VERY STIFF, (10YR, 5/4) YELLOWISH BROWN, SILTY CLAY, SLIGHTLY PLASTIC, MOIST, BLACK CONCRETIONS PRESENT	CL	3.0	PID=1 ppm ßΓ=150 cpm
7.5 8.0	112524	04/13/93 13:15	9		6		STIFF, (10YR, 4/6) DARK YELLOWISH BROWN, SILTY CLAY, SLIGHTLY PLASTIC, MOIST	CL	2.0	PID=1 ppm ßΓ=150 cpm

NOTES:

Driller: JOE RAAB, ROGER DAVIS
Drilling Equipment: CME-45

SAA = Same as Above
PID = Photoionization Detector
N/A = Not Applicable

1242

02/02/94 17:03

5174

PROJECT NUMBER: 20.03.05	PROJECT NAME: CRU2 RI PHASE II FIELD INVESTIGATION	
BORING NUMBER: 11187	COORDINATES: NORTH 477905.01 EAST 1379630.25	DATE:13-APR-93
GROUND ELEVATION: 580.5	GWL: Depth Date/Time	DATE STARTED: 13-APR-93
ENGINEER/GEOLOGIST: J BOYER	Depth Date/Time	DATE COMPLETE: 13-APR-93
DRILLING METHOD: AUGER		

DEPTH	SAMPLE	DATE TIME	BLOWS ON SAMPLE	RECOVERY INCHES		USCS SYMBOL	TSF	REMARKS
8.0 8.5	112525 04/13/93 13:15		11	4	SOFT, (10YR, 5/4) YELLOWISH BROWN, SILTY CLAY, LOW PLASTICITY, MOIST	CL	1.0	PID=1 ppm BΓ=150 cpm
8.5 9.0		04/13/93 13:15	11	0	NO RECOVERY	N/A	N/A	
9.0 9.5	112526 04/13/93 13:30		10	6	VERY STIFF, (2.5Y, 5/4) LIGHT OLIVE BROWN, SILTY CLAY, SLIGHTLY PLASTIC, MOIST	CL	3.0	PID=1 ppm BΓ=50 cpm
9.5 10.0	112526 04/13/93 13:30		15	6	SAA	CL	3	PID=1 ppm BΓ=50 cpm
10.0 10.5	112526 04/13/93 13:30		N/A 25	6	STIFF, (2.5Y, 5/4) LIGHT OLIVE BROWN, SILTY CLAY, LOW PLASTICITY, MOIST	N/A CL	N/A 2.0	PID=1 ppm BΓ=50 cpm
10.5 11.0	112527 04/13/93 13:30		31	6	VERY STIFF, (2.5Y, 5/4) LIGHT OLIVE BROWN, SILTY CLAY, SLIGHTLY PLASTIC, MOIST	CL	3.0	PID=1 ppm BΓ=50 cpm

NOTES:

Driller: JOE RAAB, ROGER DAVIS
Drilling Equipment: CME-45

SAA = Same as Above
PID = Photoionization Detector
N/A = Not Applicable

1243

PROJECT NUMBER: 20.03.05	PROJECT NAME: CRU2 RI PHASE II FIELD INVESTIGATION	
BORING NUMBER: 11188	COORDINATES: NORTH 477843.64 EAST 1379479.87	DATE:02-APR-93
GROUND ELEVATION: 576.2	GWL: Depth Date/Time	DATE STARTED: 02-APR-93
ENGINEER/GEOLOGIST: J BOYER	Depth Date/Time	DATE COMPLETE: 02-APR-93
DRILLING METHOD: AUGER		

DEPTH	SAMPLE DATE TIME	BLOWS ON SAMPLE	RECOVERY INCHES		USCS SYMBOL	TSF	REMARKS
.5	110537 04/02/93 09:30	5	6	HARD, (7.5YR, 4/3) BROWN, SILTY CLAY, LOW PLASTICITY, MOIST	CL	.4	PID=0 ppm βΓ=40 cpm
.5 1.0	110538 04/02/93 09:30	18	6	SAME AS ABOVE	CL	4	PID=0 ppm βΓ=40 cpm
1.0 1.5	110539 04/02/93 09:30	9	6	SAME AS ABOVE	CL	4	PID=0 ppm βΓ=40 cpm
1.5 2.0	110540 04/02/93 10:00	13	6	MEDIUM STIFF, (10YR, 5/4) YELLOWISH BROWN, SILTY CLAY WITH GRAVEL, MOTTLING, LOW PLASTICITY, SLIGHTLY MOIST	CL	1.5	PID=0 ppm βΓ=55 cpm
2.0 2.5	110541 04/02/93 10:00	24	6	VERY STIFF, (10YR, 5/3) BROWN, SILTY CLAY WITH GRAVEL, MOTTLED, LOW PLASTICITY, SLIGHTLY MOIST	CL	3.5	PID=0 ppm βΓ=55 cpm
2.5 3.0	110542 04/02/93 10:00	26	6	SAA	CL	3	PID=0 ppm βΓ=40 cpm
3.0 3.5	110543 04/02/93 10:15	17	3	VERY STIFF, (10YR, 5/2) GRAYISH BROWN, SILTY CLAY, MOTTLING, SLIGHTLY MOIST, LOW PLASTICITY	CL	3.5	PID=0 ppm βΓ=40 cpm
3.5 4.0	110544 04/02/93 10:15	24	6	VERY STIFF, (10YR, 5/6) YELLOWISH BROWN, SILTY CLAY, SLIGHTLY MOIST, MEDIUM PLASTICITY	CL	3.5	PID=0 ppm βΓ=40 cpm
4.0 4.5	110545 04/02/93 10:15	34	6	HARD, (10YR, 5/3) BROWN, SILTY CLAY, TRACE GRAVEL, LOW PLASTICITY, SLIGHTLY MOIST	CL	4	PID=0 ppm βΓ=40 cpm
4.5 5.0	110546 04/02/93 10:30	19	0	HARD, (10YR, 6/2) LIGHT BROWNISH GRAY, SILTY CLAY WITH GRAVEL, LOW PLASTICITY, SLIGHTLY MOIST	CL	4	PID=0 ppm βΓ=40 cpm
5.0 5.5	110547 04/02/93 10:30	18	6	HARD, (10YR, 5/4) YELLOWISH BROWN, SILTY CLAY, TRACE GRAVEL, MEDIUM PLASTICITY, SLIGHTLY MOIST	CL	4	PID=0 ppm βΓ=40 cpm
5.5 6.0	110547 04/02/93 10:30	17	6	SAA	CL	4	PID=0 ppm βΓ=40 cpm
6.0 6.5	110548 04/02/93 11:00	5	3	VERY STIFF, (10YR, 5/3) BROWN, SILTY CLAY, TRACE GRAVEL, LOW PLASTICITY, SLIGHTLY MOIST	CL	3.0	PID=0 ppm βΓ=40 cpm

NOTES:

Boring Contractor: PENNSYLVANIA DRILL
Driller: DAN JAMISON, ROGER DAVID
Drilling Equipment: MOBILE

SAA = Same as Above
PID = Photoionization Detector
N/A = Not Applicable

1244

5174

PROJECT NUMBER: 20.03.05	PROJECT NAME: CRU2 RI PHASE II FIELD INVESTIGATION	
BORING NUMBER: 11188	COORDINATES: NORTH 477843.64 EAST 1379479.87	DATE:02-APR-93
GROUND ELEVATION: 576.2	GWL: Depth Date/Time	DATE STARTED: 02-APR-93
ENGINEER/GEOLOGIST: J BOYER	Depth Date/Time	DATE COMPLETE: 02-APR-93
DRILLING METHOD: AUGER		

DEPTH	SAMPLE	DATA TIME	BLOWS ON	SAMPLE	RECOVERY	INCHES		USCS	SYMBOL	TSF	REMARKS
6.5 7.0	110549 04/02/93 11:00		4		6		VERY STIFF, (10YR, 5/3) BROWN, SILTY CLAY, LOW PLASTICITY, SLIGHTY MOIST	CL		3.5	PID=0 ppm BΓ=40 cpm
7.0 7.5	110550 04/02/93 11:00		8		6		VERY STIFF, (10YR, 5/3) BROWN, SILTY CLAY, LOW PLASTICITY, SLIGHTLY MOIST	CL		2.5	PID=0 ppm BΓ=40 cpm
7.5 8.0	110551 04/02/93 11:15		19		6		VERY STIFF, (5Y, 5/3) OLIVE, SILTY CLAY, LOW PLASTICITY, SLIGHTLY MOIST	CL		2.5	PID=0 ppm BΓ=40 cpm
8.0 8.5	110552 04/02/93 11:15		21		6		VERY STIFF, (5Y, 5/3) OLIVE, SILTY CLAY, LOW PLASTICITY, TRACE ORGANICS, SLIGHTLY MOIST	CL		3.0	PID=0 ppm BΓ=40 cpm
8.5 9.0	110553 04/02/93 11:15		32		6		VERY STIFF, (2.5Y, 6/4) LIGHT YELLOWISH BROWN, LOW PLASTICITY, SLIGHTLY MOIST	CL		3.5	PID=0 ppm BΓ=40 cpm
9.0 9.5	110554 04/02/93 13:30		11		6		VERY STIFF, (2.5Y, 5/4) LIGHT OLIVE BROWN, SILTY CLAY, MEDIUM PLASTICITY, SLIGHTLY MOIST	CL		2.5	PID=0 ppm BΓ=45 cpm
9.5 10.0	110555 04/02/93 13:30		18		6		SAA	CL		3.5	PID=0 ppm BΓ=45 cpm
10.0 10.5	110556 04/02/93 13:30		19		6		DENSE, (2.5Y, 6/3) LIGHT YELLOWISH BROWN, CLAYEY SILT, NO PLASTICITY, WET	ML		N/A	PID=0 ppm BΓ=45 cpm
10.5 11.0	110556 04/02/93 13:30		16		6		VERY SOFT, (2.5Y, 5/4) LIGHT OLIVE BROWN, SILTY CLAY, LOW PLASTICITY, WET	CL ML		1	PID=0 ppm BΓ=40 cpm
11.0 11.5	110558 04/02/93 14:00		21		6		SAA	CL		1.0	PID=0 ppm BΓ=40 cpm
11.5 12.0	110559 04/02/93 14:00		24		6		DENSE, (2.5Y, 5/6) LIGHT OLIVE BROWN, CLAYEY SILT, SLIGHT PLASTICITY, WET TO MOIST	ML		N/A	PID=0 ppm BΓ=40 cpm

NOTES:

Boring Contractor: PENNSYLVANIA DRILL
Driller: DAN JAMISON, ROGER DAVID
Drilling Equipment: MOBILE

SAA = Same as Above
PID = Photoionization Detector
N/A = Not Applicable

1245

PROJECT NUMBER: 602 3.2	PROJECT NAME: CRU2 RI PHASE I FIELD INVESTIGATION	
BORING NUMBER: 2046	COORDINATES: NORTH 478058.45 EAST 1379418.68	DATE:13-DEC-88
GROUND ELEVATION: 575.9	GWL: Depth Date/Time	DATE STARTED: 13-DEC-88
ENGINEER/GEOLOGIST: W.A. HERTEL	Depth Date/Time	DATE COMPLETE: 18-DEC-88

DRILLING METHOD: CABLE-TOOL DRILLING

DEPTH	SAMPLE	DATE TIME	BLOWS ON SAMPLE	RECOVERY INCHES		USCS SYMBOL	TSF	REMARKS
30.0 31.5	008950 12/14/88 13:50	17 22 27	15	DENSE, YELLOWISH BROWN (10 YR 5/6) POORLY GRADED SAND LESS THAN 5% GRAVEL, DRY		SP	N/A	PID=0 ppm α=0 ppm βΓ=40-60 cpm
35.5 37.0	008951 12/14/88 14:50	9 35 38	15	VERY DENSE, YELLOWISH BROWN (10 YR 5/6) POORLY GRADED SAND LESS THAN 1% GRAVEL (DRY)		SP	N/A	PID=0 ppm α=0 ppm βΓ=40-80 cpm
41.0 42.5	008952 12/14/88 15:20	16 46 43	14	VERY DENSE, LIGHT YELLOWISH BROWN, (10 YR 6/4) WELL GRADED SAND AND GRAVEL (DRY)		SW	N/A	PID=0 ppm α=0 ppm βΓ=40-80 cpm
61.0 62.5	008956 12/15/88 13:30	5 6 11	15	MEDIUM DENSE, YELLOWISH BROWN (10 YR 5/6) POORLY GRADED SAND, LESS THAN 5% GRAVEL, WET		SP	N/A	PID=0 ppm α=0 ppm βΓ=40-80 cpm
66.0 67.5	008957 12/15/88 14:30	20 27 26	12	VERY DENSE, PALE BROWN, (10 YR 6/3) WELL GRADED SAND AND GRAVEL, APPROX. 10% GRAVEL, WET		SW	N/A	PID=0 ppm α=0 ppm βΓ=40-80 cpm
71.5 73.0	008958 12/15/88 16:05	6 7 9	15	MEDIUM DENSE, BROWN (10 YR 4/3) WELL GRADED SAND AND GRAVEL, 10% GRAVEL, WET		SW	N/A	PID=0 ppm α=0 ppm βΓ=40-80 cpm

NOTES:

SAA = Same as Above
PID = Photoionization Detector
N/A = Not Applicable

1246

5174

PROJECT NUMBER: 602 3.2	PROJECT NAME: CRU2 RI PHASE I FIELD INVESTIGATION	
BORING NUMBER: 2049	COORDINATES: NORTH 477020.51 EAST 1380072.04	DATE:06-OCT-87
GROUND ELEVATION: 540.7	GWL: Depth Date/Time	DATE STARTED: 06-OCT-87
ENGINEER/GEOLOGIST: LOWELL WILLE	Depth Date/Time	DATE COMPLETE: 14-OCT-87
DRILLING METHOD: CABLE-TOOL DRILLING		

DEPTH	SAMPLE	DATE TIME	BLOWS ON SAMPLE	RECOVERY INCHES		USCS SYMBOL	TSF	REMARKS
1.5	007280	10/06/87 16:30	6 9 7	16	SOFT BLACK (7.5YR, 3/0) ORGANIC SILTY CLAY, SOME SAND AND FLYASH - MOIST. LIMESTONE ROCK. SI - BACKGROUND (SCANT)	CL	N/A	
1.5 3.0	007281	10/06/87 17:30	6 5 5	16	STIFF BROWN (10YR, 6/4) SILTY CLAY, SOME SAND AND PEBBLES - DRY. STIFF BROWN (10YR, 4/6) SILTY CLAY, TRACE SAND, SOME PEBBLES AND GRAVEL - DRY	CL CL	3.5 3.0	
3.0 4.5	007282	10/06/87 17:40	30 42 20	17	STIFF BROWN (10YR, 4/6) SILTY CLAY, TRACE SAND AND PEBBLES, SOME GRAVEL - DRY. DENSE BROWN (10YR, 6/5) SAND AND GRAVEL, SOME SILT AND CLAY - DRY.	CL GM	3.7 N/A	
4.5 6.0	007283	10/07/87 14:15	6 7 9	11	LOOSE BROWN (10YR, 6/4) SAND AND GRAVEL, SOME SILT AND CLAY - SILTY CLAY, DENSE AT 5.5 FEET - DRY.	GM	N/A	
6.0 7.5	007284	10/07/87 14:50	18 17 21	16	DENSE, BROWN (10YR, 6/5) SAND AND GRAVEL SOME PEBBLES, TRACE SILT AND CLAY -DRY.	GM	N/A	
7.5 9.0	007285	10/07/87 15:00	18 20 15	16	DENSE BROWN (10YR, 4/5)SAND AND GRAVEL, SOME SILT AND CLAY, TRACE PEBBLES - DRY. SCANT BACKGROUND SAMPLE.	GM	N/A	
9.0 10.5	007286	10/07/87 17:15	18 26 38	16	DENSE BROWN (10YR,6/4)MEDIUM TO FINE SAND - TRACE SILT AND CLAY - DRY. DENSE, BROWN (10YR,6/4)MEDIUM TO FINE SAND - TRACE SILT AND CLAY - DRY. DENSE BROWN (10YR 6/4)SAND AND GRAVEL, SOME SILT AND CLAY, TRACE PEBBLES - DRY.	SM SM GM	3.0 2.8 N/A	
15.0 16.5	007288	10/08/87 09:30	15 22 28	16	DENSE, BROWN (10YR, 5/6) SAND AND GRAVEL, SOME SILT, CLAY AND PEBBLES - DRY.	GM	N/A	
20.0 21.5	007289	10/08/87 10:30	17 22 21	16	DENSE, BROWN (10YR, 5/6) SAND AND GRAVEL, SOME SILT, CLAY AND PEBBLES - DRY.	GM	N/A	
25.0 26.5	007290	10/13/87 09:10	9 9 8	13	LOOSE BROWN (10YR, 6/8) SANDY GRAVEL, SOME SILT AND CLAY - MOIST.	GM	N/A	
30.0 31.5	007291	10/13/87 11:05	35 30 26	17	DENSE, BROWN (10YR, 6/6) SANDY GRAVEL, SOME SILT AND CLAY, TRACE PEBBLES AND COBBLES - MOIST.	GM	<0.1	α=1 ppm BΓ=65 cpm
35.0 36.5	007292	10/13/87 13:35	6 6 8	18	LOOSE BROWN (10YR, 5/4) SAND, SOME SILT AND CLAY - TRACE GRAVEL - WET.	SM SM	N/A <0.	α=1 ppm BΓ=65 cpm
40.0 41.5	007293	10/13/87 15:15	6 9 25	18	LOOSE, BROWN (10YR, 5/4) SAND, SOME SILT, CLAY AND GRAVEL - WET. DENSE, BROWN (10YR, 6/6) SANDY GRAVEL, SOME PEBBLES, COBBLES, SILT AND CLAY - WET. BOTTOM OF BORING 41.5 FEET.	SM GM	<0.1	α=1 ppm BΓ=65 cpm

NOTES:

SAA = Same as Above
PID = Photoionization Detector
N/A = Not Applicable

47

PROJECT NUMBER: 602 3.2	PROJECT NAME: CRU2 RI PHASE I FIELD INVESTIGATION	
BORING NUMBER: 2065	COORDINATES: NORTH 477866.51 EAST 1380434.37	DATE:24-SEP-87
GROUND ELEVATION: 571.5	GWL: Depth Date/Time	DATE STARTED: 24-SEP-87
ENGINEER/GEOLOGIST: D.OAKLEY/L.WILL	Depth Date/Time	DATE COMPLETE: 01-OCT-87
DRILLING METHOD: CABLE-TOOL DRILLING		

DEPTH	SAMPLE	DATE TIME	BLOWS ON SAMPLE	RECOVERY	INCHES		USCS SYMBOL	TSF	REMARKS
1.5	007175	09/24/87 11:00	5 12 11	12		VERY SOFT, DARY YELLOWISH BROWN 10YR 4/4 SILT, SOME CLAY, TRACE TRAVEL AND SAND, MOIST.	ML	0.2	PID=0 ppm α=0 ppm βΓ=40-80 cpm
3.0	007176	09/24/87 11:15	8 7 12	10		HARD BROWNISH, YELLOW 10YR, 6/6 CLAY SOME SILT, TRACE GRAVEL AND SAND, DRY. HARD BROWNISH, YELLOW 10YR, 6/8 SILT, SOME CLAY, TRACE GRAVEL AND SAND, DRY.	CL ML	4.5 0.5	PID=0 ppm α=0 ppm βΓ=40-80 cpm
4.5	007177	09/24/87 11:30	4 5 7	9		MEDIUM STIFF, YELLOWISH BROWN 10YR, 5/4 SILT, SOME CLAY, TRACE GRAVEL AND SAND, DRY.	ML	1.25	PID=0 ppm α=0 ppm βΓ=40-80 cpm
6.0	007178	09/24/87 11:45	7 11 12	16		VERY STIFF, YELLOWISH BROWN, 10YR 5/6 SILT, SOME CLAY TRACE GRAVEL, DRY.	ML	2.0	PID=0 ppm α=0 ppm βΓ=40-80 cpm
7.5	007179	09/24/87 12:05	9 10 10	13		VERY STIFF BROWNISH YELLOW 10YR 6/8 SILT, SOME SAND AND CLAY - DRY.	ML	3.0	PID=0 ppm α=0 ppm βΓ=40-80 cpm
9.0	007180	09/29/87 10:15	22 23 22	14		DENSE BROWN 7 1/2 5/6 SAND AND GRAVEL, SOME SILT AND CLAY - MOIST. STIFF BROWN 7 1/2 5/6 MOTTLED ORANGE AND RED SILTY CLAY, TRACE SAND - MOIST.	ML ML	1.0	PID=0 ppm α=0 ppm βΓ=40-80 cpm
10.5	007181	09/29/87 10:40	2 4 11	11		MEDIUM STIFF GRAY 5YR 4/2 SILT CLAY SOME PEBBLES TRACE FINE SAND AND GRAVEL, MOIST.	ML	0.5	PID=0 ppm α=0 ppm βΓ=40-80 cpm
12.0	007182	09/29/87 11:00	3 3 14	10		STIFF BROWN GRAY 5YR 4/2 SILTY CLAY, SOME PEBBLES TRACE FINE SAND - MOIST.	ML	1.0	PID=0 ppm α=0 ppm βΓ=40-80 cpm
13.5	007183	09/29/87 11:10	10 20 25	12		MEDIUM STIFF GRAY 5 1/2YR 3/0 SILTY CLAY, SOME PEBBLES, TRACE FINE SAND - DRY.	ML	0.5	PID=0 ppm α=0 ppm βΓ=40-80 cpm
15.0	007184	09/29/87 11:40	4 9 14	12		STIFF GRAY 5YR 3/0 SILTY CLAY, SOME PEBBLES AND FINE SAND - MOIST.	ML	1.0	PID=0 ppm α=0 ppm βΓ=40-80 cpm
16.5	007185	09/29/87 12:05	10 33 50	14		VERY DENSE BROWN 10YR, 5/2 SAND AND GRAVEL, SOME SILT AND CLAY, TRACE PEBBLES - MOIST.	SP	1.25	PID=0 ppm α=0 ppm βΓ=40-80 cpm
19.5	007187	09/29/87 14:45	18 30 44	12		DENSE, BROWN (10YR 4/2) SAND AND GRAVEL, SOME SILT, CLAY, TRACE PEBBLES - DRY	SP	1.50	PID=0 ppm α=0 ppm βΓ=40-80 cpm
21.0	007188	09/29/87 15:15	19 31 27	14		DENSE, BROWN (10YR 5/2) SAND AND GRAVEL, SOME SILT, CLAY AND PEBBLES, TRACE STONES, DRY.	SP	1.50	PID=0 ppm α=0 ppm βΓ=40-80 cpm

NOTES:

SAA = Same as Above
PID = Photoionization Detector
N/A = Not Applicable

1248

5174

PROJECT NUMBER: 602 3.2	PROJECT NAME: CRU2 RI PHASE I FIELD INVESTIGATION	
BORING NUMBER: 2065	COORDINATES: NORTH 477866.51 EAST 1380434.37	DATE:24-SEP-87
GROUND ELEVATION: 571.5	GWL: Depth Date/Time	DATE STARTED: 24-SEP-87
ENGINEER/GEOLOGIST: D.OAKLEY/L.WILL	Depth Date/Time	DATE COMPLETE: 01-OCT-87
DRILLING METHOD: CABLE-TOOL DRILLING		

DEPTH	SAMPLE	DATE TIME	BLOWS ON SAMPLE	RECOVERY	INCHES		USCS SYMBOL	TSF	REMARKS
35.0 36.5	007191	09/29/87 16:40	8 17 22	18		DENSE BROWN 10YR 4/3 BROWN SAND, SOME SILT, CLAY AND FINE GRAVEL, TRACE MEDIUM TO COARSE GRAVEL AND PEBBLES - MOIST.	SP	0.5	PID=0 ppm α=0 ppm βΓ=40-80 cpm
45.0 46.5	007193	09/30/87 09:45	18 14 18	18		DENSE BROWN 10YR 5/4 COARSE SAND AND GRAVEL, SOME SILT, CLAY AND PEBBLES, TRACE STONES, MOIST (POSSIBLE WET).	GP	N/A	PID=0 ppm α=0 ppm βΓ=40-80 cpm
50.0 51.5	007194	09/30/87 14:30	6 17 20	7		LOOSE BROWN 10YR 3/2 SAND AND GRAVEL, SOME SILT AND CLAY, TRACE COBBLES AND STONES, MOIST (POSSIBLE WET).	SP	N/A	PID=0 ppm α=0 ppm βΓ=40-80 cpm
55.0 56.5	007195	09/30/87 16:30	7 6 12	7		LOOSE GRAY 7 1/2 4/0 SAND, SOME FINE GRAVEL AND SILT, TRACE CLAY - WET.	SP	N/A	PID=0 ppm α=0 ppm βΓ=40-80 cpm
60.0 61.5	007196	09/30/87 17:20	11 7 7	7		LOOSE GRAY 7 1/2YR 4/0 SAND, SOME FINE GRAVEL AND SILT, TRACE CLAY - WET.	N/A	N/A	PID=0 ppm α=0 ppm βΓ=40-80 cpm
65.0 66.5	007197	10/01/87 10:30	4 11 15	7		LOOSE GRAY 5YR 5/0 SAND AND GRAVE, SOME SILT, PEBBLES AND CLAY -WET.	N/A	N/A	PID=0 ppm α=0 ppm βΓ=40-80 cpm

NOTES:

SAA = Same as Above
PID = Photoionization Detector
N/A = Not Applicable

1249

PROJECT NUMBER: 602 3.2	PROJECT NAME: CRU2 RI PHASE I FIELD INVESTIGATION	
BORING NUMBER: 2385	COORDINATES: NORTH 477886.51 EAST 1379923.25	DATE:20-APR-90
GROUND ELEVATION: 577.6	GWL: Depth Date/Time	DATE STARTED: 20-APR-90
ENGINEER/GEOLOGIST: M. SWANSON	Depth Date/Time	DATE COMPLETE: 25-APR-90
DRILLING METHOD: CABLE-TOOL DRILLING		

DEPTH	SAMPLE DATE TIME	BLOWS ON SAMPLE	RECOVERY	INCHES		USCS SYMBOL	TSF	REMARKS
1.5	032619 04/20/90 11:10	3 18 25	14		FIRM, VERY DARK BROWN (10 YR 2/2) MOTTLED, CLAYEY SILT, SLIGHT PLASTICITY, FRIABLE, DRY.	ML	1.0	PID=0.1 ppm α=0 ppm βΓ=40 cpm
1.5 3.0	032620 04/20/90 11:16	13 13 21	4		FIRM, VERY DARK BROWN (10 YR 2/2) MOTTLED, CLAYEY SILT, SLIGHT PLASTICITY, FRIABLE, DRY. FIRM, YELLOWISH BROWN (10 YR 5/4) MOTTLED, SILTY CLAY, SOME SAND, LOW PLASTICITY, DRY TO SLIGHTLY MOIST.	ML CL	1.0 1.7	PID=0.1 ppm α=0 ppm βΓ=40 cpm
3.0 4.5	032621 04/20/90 11:23	13 13 13	18		FIRM, YELLOWISH BROWN (10 YR 5/4) MOTTLED, SILTY CLAY, SOME SAND, LOW PLASTICITY, DRY TO SLIGHTLY MOIST.	CL	1.75	PID=0.1 ppm α=0 ppm βΓ=40-50 cpm
4.5 6.0	032622 04/20/90 11:27	8 9 11	12		FIRM, YELLOWISH BROWN (10 YR 5/4) MOTTLED, SILTY CLAY, SOME SAND, LOW PLASTICITY, DRY TO SLIGHTLY MOIST. FIRM, GRAYISH BROWN (2.5 Y 5/2) MOTTLED CLAY, SOME SAND, SILT; LOW PLASTICITY, DRY.	CL CL	1.75 2.0	PID=0.1 ppm α=0 ppm βΓ=50-60 cpm
6.0 7.5	032623 04/20/90 11:31	7 9 11	18		FIRM, BROWNISH YELLOW (10 YR 6/6) CLAY, SOME GRAVEL, SAND, LOW TO MED. PLASTICITY, MOIST. FIRM, LIGHT YELLOWISH BROWN (10 YR 6/4) MOTTLED, CLAY, TRACE OF SAND, DRY, LOW PLASTICITY.	CL CL	1.0 2.0	PID=0.1 ppm α=0 ppm βΓ=40-60 cpm
7.5 9.0	032624 04/20/90 11:37	8 8 9	18		HARD, LIGHT OLIVE BROWN (2.5 Y 5/4) CLAY, SOME SAND, .25 IN. SAND LENSE WITH WATER AT 8.7 FT., LOW PLASTICITY, MOIST	CL	2.5	PID=0.1 ppm α=0 ppm βΓ=40-50 cpm
9.0 10.5	032625 04/20/90 15:10	1 5 7	16		FIRM, BROWNISH YELLOW (10 YR 6/8) SANDY CLAY, HIGH PLASTICITY, MOIST; SAND LENSES OF 1 IN. AT 9.6 AND 10.1 FT.	CH	.75	PID=0.5 ppm α=0 ppm βΓ=40-60 cpm
10.5 12.0	032626 04/20/90 15:14	6 8 10	18		FIRM, BROWNISH YWLLOW (10 YR 5/8), SAND-CLAY MIXTURE, SOME ANGULAR TO SUBROUNDED PEBBLES, LOW TO MEDIUM PLASTICITY; MOIST CLAY, WET SANDS SAND LENSE .5 IN. THICK AT 12.3 FT.	CL	1.25	PID=0.3 ppm α=0 ppm βΓ=40-50 cpm
12.0 13.5	032627 04/20/90 15:35	6 7 10	18		FIRM, BROWNISH YELLOW (10 YR 6/8), SAND-CLAY MIXTURE SOME ANGULAR TO SUBROUNDED PEBBLES, LOW TO MEDIUM PLASTICITY MOIST CLAY, WET SANDS SAND LENSE .5 IN. THICK AT 12.3 FT. HARD, GRAY (10 YR 5/1), SILTY CLAY, TRACE OF SAND, LOW PLASTICITY, DRY.	CL CL	1.25 2.7	PID=0.2 ppm α=0 ppm βΓ=40-60 cpm
13.5 15.0	032628 04/20/90 15:41	7 9 12	15		HARD, GRAY (10 YR 5/1), SITLY CLAY, TRACE OF SAND, LOW PLASTICITY, DRY.	CL	2.75	PID=0.2 ppm α=0 ppm βΓ=50-60 cpm
15.0 16.5	032629 04/20/90 15:52	3 3 6	10		HARD, GRAY (10 YR 5/1) CLAY, SOME ANGULAR PEBBLES, TRACE OF SILT, LOW PLASTICITY, DRY	CL	2.5	PID=0.5 ppm α=0 ppm βΓ=40-60 cpm
16.5 18.0	032630 04/20/90 16:02	6 9 10	18		HARD, GRAY (10 YR 5/1) CLAY, SOME ANGULAR PEBBLES, TRACE OF SILT, LOW PLASTICITY, DRY	CL	2.5	PID=0.5 ppm α=0 ppm βΓ=50-60 cpm

NOTES:

SAA = Same as Above
PID = Photoionization Detector
N/A = Not Applicable

1250

5174

PROJECT NUMBER: 602 3.2	PROJECT NAME: CRU2 RI PHASE I FIELD INVESTIGATION	
BORING NUMBER: 2385	COORDINATES: NORTH 477886.51 EAST 1379923.25	DATE:20-APR-90
GROUND ELEVATION: 577.6	GWL: Depth Date/Time	DATE STARTED: 20-APR-90
ENGINEER/GEOLOGIST: M. SWANSON	Depth Date/Time	DATE COMPLETE: 25-APR-90
DRILLING METHOD: CABLE-TOOL DRILLING		

DEPTH	SAMPLE	DATE TIME	BLOWS ON SAMPLE	RECOVERY	INCHES		USCS SYMBOL	TSF	REMARKS
18.0 19.5	032631	04/20/90 16:07	7 10 12	12		HARD, GRAY (10 YR 5/1) CLAY, SOME ANGULAR PEBBLES, TRACE OF SILT, LOW PLASTICITY, DRY	CL	2.5	PID=0.4 ppm α=0 ppm βΓ=40-50 cpm
19.5 21.0	032632	04/21/90 09:40	10 18 30	14		HARD, OLIVE GRAY (5 Y 5/2) SITLY CLAY, TRACE OF SAND, LIMESTONE COBBLE, DRY.	CL	3.5	PID=0.1 ppm α=0 ppm βΓ=40 cpm
21.0 22.5	032633	04/21/90 10:05	17 20 25	16		HARD, OLIVE GRAY (5 Y 5/2) SITLY CLAY, TRACE OF SAND, LIMESTONE COBBLE, DRY.	CL	3.5	PID=0.1 ppm α=0 ppm βΓ=40-60 cpm
22.5 24.0	032634	04/21/90 10:12	12 17 32	18		HARD, OLIVE GRAY (5 Y 5/2), SILTY CLAY, TRACE OF SAND, LIMESTONE COBBLE, DRY. DENSE, YELLOWISH BROWN (10 YR 5/6) POORLY GRADED FINE SAND, DRY.	CL SP	3.5	PID=0.1 ppm α=0 ppm βΓ=40-60 cpm
24.0 25.5	032635	04/21/90 10:40	16 42 36	16		VERY DENSE, LIGHT GRAY (10 YR 7/1) AND BLACK (10 YR 2/1) WITH BROWNISH YELLOW (10 YR 6/8), WELL GRADED SAND, SOME PEBBLES AND GRAVEL (SUBROUNDED), DRY.	SW	N/A	PID=0.1 ppm α=0 ppm βΓ=40-60 cpm
30.0 31.5	032636	04/21/90 14:19	5 16 21	9		DENSE, YELLOWISH BROWN (10 YR 5/6), WELL GRADED GRAVELLY SANDS, SUBROUNDED, DRY.	SW	N/A	PID=0.08 ppm α=0 ppm βΓ=60-70 cpm
35.0 36.5	032637	04/21/90 14:41	13 17 27	10		DENSE, LIGHT GRAY (10 YR 7/1) WITH BANDS OF YELLOWISH BROWN (10 YR 5/6) POORLY GRADED FINE SAND, SOME ROUNDED PEBBLES, DRY.	SP	N/A	PID=0.1 ppm α=0 ppm βΓ=70 cpm
40.0 41.5	032638	04/21/90 15:40	18 19 19	12		DENSE, YELLOWISH BROWN (10 YR 5/6) POORLY GRADED FINE SAND, DRY.	SP	N/A	PID=0.5 ppm α=0 ppm βΓ=40 cpm
45.0 46.5	032639	04/21/90 16:18	3 23 26	8		DENSE, BROWNISH YELLOW (10 YR 6/6) WELL GRADED GRAVELLY SAND, SUBROUNDED, MOIST.	SW	N/A	PID=0.5 ppm α=0 ppm βΓ=40-65 cpm
50.0 51.5	032640	04/22/90 08:50	9 19 41	11		VERY DENSE, LIGHT YELLOWISH BROWN (10 YR 6/4) WELL GRADED GRAVELLY SAND, SOME PEBBLES, SUBROUNDED TO SUBANGULAR, DRY TO SLIGHTLY MOIST.	SW	N/A	PID=0.15 ppm α=0 ppm βΓ=60-80 cpm
55.0 56.5	032641	04/22/90 09:55	5 13 38	7		VERY DENSE, PALE BROWN (10 YR 6/3) POORLY GRADED GRAVELLY FINE SAND, ROUNDED TO SUBANGULAR, SATURATED; 1.0 IN BAND OF IRON OXIDE STAINING AT 55.4 FT.	SP	N/A	PID=0.20 ppm α=0 ppm βΓ=70-80 cpm
60.0 61.5	032642	04/22/90 11:10	5 8 13	6		MEDIUM DENSE, GRAY (10 YR 5/1) GRAVELLY PEBBLEY SAND, WELL GRADED AND FINE TO COARSE, LIMESTONE COBBLE, SUBROUNDED, SATURATED.	SW	N/A	PID=0.1 ppm α=0 ppm βΓ=60-80 cpm
65.0 66.5	032643	04/22/90 13:15	13 16 18	8		DENSE, GRAYISH BROWN (10 YR 5/2), WELL GRADED GRAVELLY SAND, SUBROUNDED, SATURATED.	SW	N/A	PID=0.1 ppm α=0 ppm βΓ=50-60 cpm

NOTES:

SAA = Same as Above
PID = Photoionization Detector
N/A = Not Applicable

1251

PROJECT NUMBER: 602 3.2	PROJECT NAME: CRU2 RI PHASE I FIELD INVESTIGATION	
BORING NUMBER: 2385	COORDINATES: NORTH 477886.51 EAST 1379923.25	DATE:20-APR-90
GROUND ELEVATION: 577.6	GWL: Depth Date/Time	DATE STARTED: 20-APR-90
ENGINEER/GEOLOGIST: M. SWANSON	Depth Date/Time	DATE COMPLETE: 25-APR-90
DRILLING METHOD: CABLE-TOOL DRILLING		

DEPTH	SAMPLE	DATE TIME	BLOWS ON SAMPLE	RECOVERY	INCHES		USCS SYMBOL	TSF	REMARKS
70.0 71.5	032644 04/22/90 14:45		15 21 29	6		DENSE, GRAYISH BROWN (10 YR 5/2), WELL GRADED GRAVELLY COARSE SAND, ROUNDED TO SUBANGULAR, SATURATED.	SW	N/A	PID=0.15 ppm α=0 ppm βΓ=40-50 cpm

NOTES:

SAA = Same as Above
PID = Photoionization Detector
N/A = Not Applicable

1252

PROJECT NUMBER: 20.03.05	PROJECT NAME: CRU2 RI PHASE II FIELD INVESTIGATION	
BORING NUMBER: 2943	COORDINATES: NORTH 477474.62 EAST 1379635.87	DATE:12-APR-93
GROUND ELEVATION: 573.5	GWL: Depth 54 Date/Time 16-Apr-93 12:55	DATE STARTED: 12-APR-93
ENGINEER/GEOLOGIST: KEN GEIGER	Depth 51.6 Date/Time 21-Apr-93 08:00	DATE COMPLETE: 20-APR-93
DRILLING METHOD: CABLE TOOL		

DEPTH	SAMPLE / DATE / TIME	BLOWS ON SAMPLE	RECOVERY INCHES		USCS SYMBOL	TSF	REMARKS
1.5	110737 04/12/93 14:20	1 2 1	11	STIFF, DARK YELLOWISH BROWN, (10YR, 4/4), SILTY CLAY WITH SOME PEBBLES AND ROCK FRAGMENTS, MEDIUM PLASTICITY, SLIGHTLY MOIST	CL	1.25	PID=0 ppm α=0 ppm βΓ=90 cpm
1.5 3.0	110738 04/12/93 14:25	4 7 12	10	VERY STIFF, YELLOWISH BROWN, (10YR, 5/4), SILTY SANDY CLAY WITH ROCK FRAGMENTS, MEDIUM PLASTICITY, SLIGHTLY MOIST	CL	2.5	PID=0 ppm α=0 ppm βΓ=60 cpm
3.0 4.5	110739 04/12/93 14:30	13 18 18	11	HARD, LIGHT OLIVE BROWN (2.5Y, 5/4) SILTY SANDY CLAY WITH ROCK FRAGMENTS AND PEBBLES, LOW PLASTICITY, SLIGHTLY MOIST	CL	4.5	PID=5 ppm α=0 ppm βΓ=80 cpm
4.5 6.0	110740 04/12/93 14:35	17 19 15	6	VERY STIFF, YELLOWISH BROWN, (10YR, 5/4), SILTY SANDY CLAY WITH ROCK FRAGMENTS, LOW PLASTICITY, SLIGHTLY MOIST	CL	4	PID=2 ppm α=0 ppm βΓ=90 cpm
6.0 7.5	110741 04/12/93 14:40	10 8 7	13	MEDIUM STIFF, GRAYISH BROWN, (2.5Y, 5/2), SILTY SANDY CLAY WITH ROCK FRAGMENTS, LOW PLASTICITY, MOIST	CL	1	PID=2 ppm α=0 ppm βΓ=60 cpm
7.5 9.0	110742 04/12/93 14:45	6 6 9	10	SOFT, DARK GRAYISH BROWN, (2.5Y, 4/2), SILTY SANDY CLAY WITH ROCK FRAGMENTS, MEDIUM PLASTICITY, MOIST	CL	0.5	PID=2 ppm α=0 ppm βΓ=90 cpm
9.0 10.5	110743 04/12/93 14:50	10 16 17	13	VERY SOFT, DARK GRAYISH BROWN, (2.5Y, 4/2), SILTY SANDY CLAY WITH ROCK FRAGMENTS, MEDIUM PLASTICITY, MOIST	CL	0.25	PID=2 ppm α=0 ppm βΓ=100 cpm
10.5 12.0	110744 04/12/93 16:45	10 12 14	7	MEDIUM STIFF, OLIVE BROWN, (2.5Y, 4/3), SILTY CLAY WITH A TRACE OF GRAVEL, HIGH PLASTICITY, MOIST	CH	1	PID=0 ppm α=0 ppm βΓ=80 cpm
12.0 13.5	110745 04/13/93 08:45	15 17 17	16	SOFT, LIGHT OLIVE BROWN, (2.5Y, 5/4), SILTY SANDY CLAY, HIGH PLASTICITY, MOIST	CH	0.5	PID=0 ppm α=0 ppm βΓ=60 cpm
13.5 15.0	110746 04/13/93 09:00	12 15 17	12	SOFT, LIGHT OLIVE BROWN, (2.5Y, 5/4), SILTY, SANDY CLAY, MEDIUM PLASTICITY, MOIST	CL	0.5	PID=0 ppm α=0 ppm βΓ=70 cpm
15.0 16.5	110747 04/13/93 09:07	9 13 21	13	STIFF, OLIVE BROWN, (2.5Y, 4/4), SILTY, SANDY, GRAVELLY CLAY, MEDIUM PLASTICITY, MOIST	CL	2	PID=0 ppm α=0 ppm βΓ=70 cpm
16.5 18.0	110748 04/13/93 09:15	9 14 14	12	VERY STIFF, GRAYISH BROWN, (2.5Y, 5/2), SILTY, SANDY CLAY, MEDIUM PLASTICITY, MOIST	CL	3	PID=0 ppm α=0 ppm βΓ=60 cpm
18.0 19.5	110749 04/13/93 09:30	9 16 19	13	HARD, DARK GRAY, (2.5Y, 4/1), SILTY CLAY WITH SOME GRAVEL, LOW PLASTICITY, MOIST	CL	4.5	PID=0 ppm α=0 ppm βΓ=90 cpm

NOTES:

Driller: DAVE NEWMAN

SAA = Same as Above
PID = Photoionization Detector
N/A = Not Applicable

1253

PROJECT NUMBER: 20.03.05	PROJECT NAME: CRU2 RI PHASE II FIELD INVESTIGATION	
BORING NUMBER: 2943	COORDINATES: NORTH 477474.62 EAST 1379635.87	DATE:12-APR-93
GROUND ELEVATION: 573.5	GWL: Depth 54 Date/Time 16-Apr-93 12:55	DATE STARTED: 12-APR-93
ENGINEER/GEOLOGIST: KEN GEIGER	Depth 51.6 Date/Time 21-Apr-93 08:00	DATE COMPLETE: 20-APR-93
DRILLING METHOD: CABLE TOOL		

DEPTH	SAMPLE	DATE TIME	BLOWS ON SAMPLE	RECOVERY INCHES		USCS SYMBOL	TSF	REMARKS
19.5 21.0	110750	04/13/93 10:45	12 14 49	12	VERY DENSE, BROWN, (10YR, 5/3), POORLY GRADED SAND WITH SOME GRAVEL, DRY	SP	N/A	PID=2 ppm α=0 ppm βΓ=60 cpm
21.0 25.0		04/13/93 10:45	N/A	N/A	NO SAMPLES TAKEN.. SAMPLES TO BE TAKEN EVERY 5' STARTING AT 25.0'.	N/A	N/A	
25.0 26.5	110751	04/13/93 14:35	17 43 50	10	VERY DENSE, BROWN, (10YR, 5/3), POORLY GRADED, SAND WITH SOME GRAVEL, DRY	SP	N/A	PID=0 ppm α=0 ppm βΓ=40 cpm
30.0 31.5	110752	04/13/93 14:55	17 32 50	9	VERY DENSE, LIGHT OLIVE BROWN, (2.5Y, 5/6) WELL GRADED SAND WITH FEW PEBBLES, DRY	SW	N/A	PID=0 ppm α=0 ppm βΓ=60 cpm
35.0 36.5	110753	04/13/93 15:30	17 23 28	11	VERY DENSE, DARK YELLOWISH BROWN, (10YR, 4/4), WELL GRADED, SAND WITH FEW PEBBLES, DRY	SW	N/A	PID=0 ppm α=0 ppm βΓ=70 cpm
40.0 40.5	110754	04/13/93 16:05	14 22 29	9	VERY DENSE, DARK YELLOWISH BROWN, (10YR, 4/4), POORLY GRADED, SAND WITH PEBBLES, DRY	SP	N/A	PID=0 ppm α=0 ppm βΓ=60 cpm
45.0 46.5	110755	04/15/93 09:32	15 50	N/A	VERY DENSE, PALE BROWN, (10YR, 6/3), POORLY GRADED SAND WITH MUCH PEA GRAVEL, MOIST	SP	N/A	PID=1 ppm α=0 ppm βΓ=80 cpm
50.0 51.5	110756	04/15/93 10:15	29 36 50	16	VERY DENSE, PALE BROWN, (10YR, 6/3), POORLY GRADED, SAND WITH PEA GRAVEL, MOIST	SP	N/A	PID=1 ppm α=0 ppm βΓ=70 cpm
51.5 53.0	110757	04/15/93 13:40	38 50	8	VERY DENSE, YELLOWISH BROWN, (10YR, 5/4), POORLY GRADED, SAND WITH PEA GRAVEL, MOIST	SP	N/A	PID=1 ppm α=0 ppm βΓ=60 cpm
53.0 54.5	110758	04/15/93 14:00	12 28 23	14	VERY DENSE, DARK YELLOWISH BROWN, (10YR, 4/4), POORLY GRADED, SAND WITH PEA GRAVEL, MOIST	SP	N/A	PID=4 ppm α=0 ppm βΓ=80 cpm
54.5 56.0	110759	04/15/93 14:45	13 25 25	12	VERY DENSE, DARK YELLOWISH BROWN, (10YR, 4/4), POORLY GRADED, SAND WITH PEA GRAVEL, MOIST	SP	N/A	PID=2 ppm α=0 ppm βΓ=80 cpm
56.0 57.5	110760	04/16/93 08:55	6 14 18	11	DENSE, DARK YELLOWISH BROWN, (10YR, 4/4), POORLY GRADED, SAND WITH PEA GRAVEL, WET	SP	N/A	PID=0 ppm α=0 ppm βΓ=80 cpm
57.5 59.0	110761	04/16/93 09:15	9 23 27	15	VERY DENSE, OLIVE BROWN, (2.5Y, 4/3), WELL GRADED SAND WITH PEA GRAVEL, MOIST	SW	N/A	PID=0 ppm α=0 ppm βΓ=80 cpm

NOTES:

Driller: DAVE NEWMAN

SAA = Same as Above
PID = Photoionization Detector
N/A = Not Applicable

1254

PROJECT NUMBER: 20.03.05	PROJECT NAME: CRU2 RI PHASE II FIELD INVESTIGATION	
BORING NUMBER: 2943	COORDINATES: NORTH 477474.62 EAST 1379635.87	DATE:12-APR-93
GROUND ELEVATION: 573.5	GWL: Depth 54 Date/Time 16-Apr-93 12:55	DATE STARTED: 12-APR-93
ENGINEER/GEOLOGIST: KEN GEIGER	Depth 51.6 Date/Time 21-Apr-93 08:00	DATE COMPLETE: 20-APR-93

DRILLING METHOD: CABLE TOOL

DEPTH	SAMPLE	DATE TIME	BLOWS ON SAMPLE	RECOVERY	INCHES		USCS SYMBOL	TSF	REMARKS
59.0 60.5	110762	04/16/93 09:50	7 9 18	13		MEDIUM DENSE, OLIVE BROWN, (2.5Y, 4/3), WELL GRADED, SAND WITH PEA GRAVEL, MOIST	SW	N/A	PID=0 ppm α=0 ppm βΓ=60 cpm
60.5 62.0	110763	04/16/93 10:05	5 6 17	12		MEDIUM DENSE, DARK OLIVE BROWN, (2.5Y, 3/3), POORLY GRADED SAND WITH PEA GRAVEL, MOIST	SP	N/A	PID=0 ppm α=0 ppm βΓ=60 cpm
62.0 63.5	110764	04/16/93 10:25	6 14 20	18		DENSE, LIGHT OLIVE BROWN, (2.5Y, 5/4), POORLY GRADED, SAND WITH PEA GRAVEL, MOIST	SP	N/A	PID=0 ppm α=0 ppm βΓ=60 cpm
63.5 65.0	110765	04/16/93 13:30	8 15 24	18		DENSE, LIGHT OLIVE BROWN, (2.5Y, 5/4), WELL GRADED, SAND WITH PEA GRAVEL, MOIST	SW	N/A	PID=0 ppm α=0 ppm βΓ=60 cpm

NOTES:

Driller: DAVE NEWMAN

SAA = Same as Above
PID = Photoionization Detector
N/A = Not Applicable

1255

PROJECT NUMBER: 20.03.05	PROJECT NAME: CRU2 RI PHASE II FIELD INVESTIGATION	
BORING NUMBER: 2944	COORDINATES: NORTH 477514.06 EAST 1379493.03	DATE:23-JUN-93
GROUND ELEVATION: 574.1	GWL: Depth Date/Time	DATE STARTED: 23-JUN-93
ENGINEER/GEOLOGIST: D. O'BRIEN	Depth Date/Time	DATE COMPLETE: 23-JUN-93
DRILLING METHOD: CABLE TOOL		

DEPTH	SAMPLE	DATE TIME	BLOWS ON	SAMPLE	RECOVERY	INCHES		USCS SYMBOL	TSF	REMARKS
1.5	113741	06/08/93 09:35	2 5 7		12		VERY STIFF, (2.5Y, 5/6) LIGHT OLIVE BROWN, GRAVELLY CLAY, NO PLASTICITY, DRY	CL	2.75	PID=0 ppm BΓ=60 cpm
3.0	113742	06/08/93 09:40	8 8 8		8		HARD, (2.5Y, 6/4) LIGHT YELLOWISH BROWN, GRAVELLY CLAY, NO PLASTICITY, DRY	CL	4	PID=0 ppm BΓ=60 cpm
4.5	113743	06/08/93 09:45	8 12 13		15		HARD, (2.5Y, 6/2), LIGHT BROWNISH GRAY, GRAVELLY CLAY, NO PLASTICITY, DRY	CL	4.5	PID=0 ppm BΓ=40 cpm
6.0	113744	06/08/93 09:50	12 17 19		15		VERY STIFF, (5Y, 4/2) OLIVE GRAY SILTY CLAY WITH TRACE GRAVEL, NO PLASTICITY, DRY	CL	3.5	PID=0 ppm BΓ=60 cpm
7.5	113745	06/08/93 09:55	20 17 15		15		VERY STIFF, (5Y, 5/3), OLIVE, SANDY GRAVELLY CLAY, NO PLASTICITY, SLIGHTLY MOIST	CL	3.5	PID=0 ppm BΓ=40 cpm
9.0		06/08/93 10:00	10 8 9		0		NO RECOVERY	N/A	N/A	
10.5	113746	06/08/93 14:30	10 12 26		15		HARD, (2.5Y, 5/2) GRAYISH BROWN, GRAVELLY CLAY, NO PLASTICITY, DRY	CL	4.5	PID=0 ppm BΓ=60 cpm
12.0	113747	06/08/93 14:50	30 30 25		8		VERY STIFF, SAA	CL	3.5	PID=0 ppm BΓ=60 cpm
13.5	113748	06/08/93 16:10	16 23 25		18		HARD, (2.5Y, 6/1) GRAY, GRAVELLY CLAY, NO PLASTICITY, DRY	CL	4.5	PID=0 ppm BΓ=40 cpm
15.0	113749	06/08/93 16:20	32 23 32		15		HARD, (2.5Y, 5/6) LIGHT OLIVE BROWN, GRAVELLY CLAY, NO PLASTICITY, DRY	CL	4.5	PID=0 ppm BΓ=40 cpm
16.5	113750	06/09/93 13:50	13 15 26		18		HARD, (2.5Y, 5/3) LIGHT OLIVE BROWN, GRAVELLY CLAY, NO PLASTICITY, DRY	CL	4.5	PID=0 ppm BΓ=40 cpm
18.0	113751	06/09/93 14:00	32 36 47		18		SAA	CL	4.5	PID=0 ppm BΓ=60 cpm
19.5	113752	06/09/93 14:10	50 50		12		VERY STIFF, (2.5Y, 5/4) LIGHT OLIVE BROWN, GRAVELLY CLAY, NO PLASTICITY, DRY	CL	3.25	PID=0 ppm BΓ=60 cpm

NOTES:

SAA = Same as Above
PID = Photoionization Detector
N/A = Not Applicable

1256

5174 02/02/94 17:03

PROJECT NUMBER: 20.03.05	PROJECT NAME: CRU2 RI PHASE II FIELD INVESTIGATION	
BORING NUMBER: 2944	COORDINATES: NORTH 477514.06 EAST 1379493.03	DATE:23-JUN-93
GROUND ELEVATION: 574.1	GWL: Depth Date/Time	DATE STARTED: 23-JUN-93
ENGINEER/GEOLOGIST: D. O'BRIEN	Depth Date/Time	DATE COMPLETE: 23-JUN-93
DRILLING METHOD: CABLE TOOL		

DEPTH	SAMPLE DATE TIME	BLOWS ON SAMPLE	RECOVERY INCHES		USCS SYMBOL	TSF	REMARKS
19.5 21.0	113753 06/10/93 09:25	50	6	HARD, (2.5Y, 5/1) GRAY, GRAVELLY CLAY, NO PLASTICITY, DRY	CL	4.5	PID=0 ppm BΓ=60 cpm
21.0 22.5	113754 06/10/93 09:55	50	4	SAA, VERY DENSE, (2.5Y, 5/4) LIGHT OLIVE BROWN, MEDIUM TO COARSE SAND, POORLY GRADED, DRY	SP	N/A	PID=0 ppm BΓ=60 cpm
25.0 26.5	113755 06/10/93 13:30	13 25 20	8	DENSE, (2.5Y, 5/6) LIGHT OLIVE BROWN, MEDIUM TO COARSE SAND, POORLY GRADED, DRY	SP	N/A	PID=0 ppm BΓ=60 cpm
30.0 31.5	113755 06/10/93 14:30	9 14 16	5	SAA	SP	N/A	PID=0 ppm BΓ=60 cpm
35.0 36.5	113755 06/10/93 16:30	7 18 20	7	SAA	SP	N/A	PID=0 ppm BΓ=40 cpm
40.0 41.5	113755 06/11/93 08:40	3 50	10	VERY DENSE, (2.5Y, 5/4) LIGHT OLIVE BROWN, SAND WITH GRAVEL, POORLY GRADED, SLIGHTLY MOIST	SP	N/A	PID=0 ppm BΓ=60 cpm
45.0 46.5	113755 06/11/93 09:30	60	4	SAA	SP	N/A	PID=0 ppm BΓ=60 cpm
50.0 51.5	113755 06/11/93 10:30	10 31 46	8	SAA, MOIST	SP	N/A	PID=0 ppm BΓ=40 cpm
55.0 56.5	113761 06/11/93 13:45	7 16 15	6	MEDIUM DENSE, (2.5Y, 5/4) LIGHT OLIVE BROWN, FINE SAND, POORLY GRADED, WET	SP	N/A	PID=0 ppm BΓ=60 cpm
56.5 58.0	113762 06/11/93 13:55	10 21 19	10	DENSE, (2.5Y, 5/4) LIGHT OLIVE BROWN, FINE SAND, POORLY GRADED, WET	SP	N/A	PID=0 ppm BΓ=60 cpm
58.0 59.5	113763 06/14/93 10:45	9 18 23	18	DENSE, (2.5Y, 5/4) LIGHT OLIVE BROWN, FINE SAND AND GRAVEL, POORLY GRADED, WET	SP	N/A	PID=0 ppm BΓ=60 cpm
59.5 61.0	113764 06/14/93 13:45	12 20 27	15	SAA	SP	N/A	PID=0 ppm BΓ=60 cpm
61.0 62.5	113765 06/14/93 13:55	10 15 16	12	SAA	SP	N/A	PID=0 ppm BΓ=60 cpm

NOTES:

SAA = Same as Above
PID = Photoionization Detector
N/A = Not Applicable

1257

PROJECT NUMBER: 20.03.05	PROJECT NAME: CRU2 RI PHASE II FIELD INVESTIGATION	
BORING NUMBER: 2944	COORDINATES: NORTH 477514.06 EAST 1379493.03	DATE:23-JUN-93
GROUND ELEVATION: 574.1	GWL: Depth Date/Time	DATE STARTED: 23-JUN-93
ENGINEER/GEOLOGIST: D. O'BRIEN	Depth Date/Time	DATE COMPLETE: 23-JUN-93
DRILLING METHOD: CABLE TOOL		

DEPTH	SAMPLE	DATE TIME	BLOWS ON SAMPLE	RECOVERY	INCHES		USCS SYMBOL	TSF	REMARKS
62.5 64.0	113766	06/14/93 14:10	6 18 22	18		SAA	SP	N/A	PID=0 ppm BΓ=60 cpm
64.0 65.5	113767	06/14/93 14:33	15 20 32	14		SAA	SP	N/A	PID=0 ppm BΓ=60 cpm
65.5 67.0		06/14/93 14:45	23 35 35	0		NO RECOVERY	N/A	N/A	

NOTES:

SAA = Same as Above
PID = Photoionization Detector
N/A = Not Applicable

1258

5174

PROJECT NUMBER: 20.03.05	PROJECT NAME: CRU2 RI PHASE II FIELD INVESTIGATION	
BORING NUMBER: 2945	COORDINATES: NORTH 477972.18 EAST 1379119.93	DATE:19-MAR-93
GROUND ELEVATION: 566.7	GWL: Depth 43.5 Date/Time 02-Apr-93 08:30	DATE STARTED: 19-MAR-93
ENGINEER/GEOLOGIST: KEN GEIGER	Depth 43.6 Date/Time 07-Apr-93 08:30	DATE COMPLETE: 07-APR-93
DRILLING METHOD: CABLE TOOL		

DEPTH	SAMPLE DATE TIME	BLOWS ON SAMPLE	RECOVERY INCHES		USCS SYMBOL	TSF	REMARKS
1.5	110237 03/19/93 09:50	2 8 10	8	SOFT, BROWN (10YR 4/3), SILTY SANDY CLAY WITH LIGHT YELLOWISH BROWN (2.5Y 6/4) MOTTLING, SOME GRAVEL + CONCRETE FRAGMENTS, MEDIUM PLASTICITY, SLIGHTLY MOIST	CL	.5	PID=0 ppm α=0 ppm βΓ=60 cpm
3.0	110238 03/19/93 10:00	9 10 9	7	SOFT, BROWN (10YR 4/3), SILTY CLAY WITH SOME CONCRETE FRAGMENTS AND GRAVEL, MEDIUM PLASTICITY, SLIGHTLY MOIST	CL	.5	PID=0 ppm α=0 ppm βΓ=60 cpm
4.5	110239 03/19/93 10:05	4 7 7	5	STIFF, BROWN (10YR 4/3), SILTY SANDY CLAY WITH SOME CONCRETE FRAGMENTS AND GRAVEL, MEDIUM PLASTLICITY, SLIGHTLY MOIST	CL	1.5	PID=0 ppm α=0 ppm βΓ=60-80 cpm
6.0	110240 03/19/93 10:15	45 40 16	4	STIFF, BROWN (10YR 4/3), SILTY SANDY CLAY WITH CONCRETE FRAGMENTS AND GRAVEL, MEDIUM PLASTICITY, SLIGHTLY MOIST	CL	1.5	PID=0 ppm α=0 ppm βΓ=60-80 cpm
7.5	110241 03/19/93 10:25	32 30 28	4	STIFF, BROWN (10YR 4/3), SANDY CLAY WITH CONCRETE FRAGMENTS AND SOME GRAVEL, MEDIUM PLASTICITY, SLIGHTLY MOIST	CL	1	PID=0 ppm α=0 ppm βΓ=80 cpm
9.0	110242 03/19/93 10:30	31 28 16	5	SAME AS ABOVE	CL	1.5	PID=0 ppm α=0 ppm βΓ=80 cpm
10.5	110243 03/19/93 10:35	16 21 20	18	STIFF, DARK GRAYISH BROWN (10YR 4/2), SILTY CLAY WITH A TRACE OF GRAVEL, LOW PLASTICITY, SLIGHTLY MOIST	CL	1.5	PID=0 ppm α=0 ppm βΓ=60-80 cpm
12.0	110245 03/24/93 16:45	8 9 10	13	STIFF, DARK BROWN (10YR 3/3), SILTY CLAY WITH A TRACE OF GRAVEL, LOW PLASTICITY, SLIGHTLY MOIST	CL	1.5	PID=1-2 ppm α=0 ppm βΓ=60-80 cpm
13.5	110246 03/25/93 09:00	9 13 17	14	STIFF, DARK BROWN (10YR, 3/3), SILTY CLAY WITH A TRACE OF GRAVEL; MEDIUM PLASTICITY, SLIGHTLY MOIST	CL	1.75	PID=0 ppm α=0 ppm βΓ=80-100 cpm
15.0	110247 03/25/93 09:25	34 17 10	13	VERY STIFF, DARK BROWN (10YR 3/3), SILTY CLAY WITH A TRACE OF GRAVEL AND SAND, MEDIUM PLASTICITY, SLIGHTLY MOIST	CL	3	PID=0 ppm α=0 ppm βΓ=80-100 cpm
16.5	110248 03/25/93 10:05	17 33 50	13	STIFF, BROWN (10YR 4/3), SILTY CLAY WITH SOME GRAVEL AND SAND, MEDIUM PLASTICITY, SLIGHTLY MOIST	CL	1.5	PID=0 ppm α=0 ppm βΓ=80-100 cpm
18.0	110249 03/25/93 10:40	9 13 17	12	STIFF, BROWN (10YR 5/3), SILTY SANDY CLAY WITH SOME GRAVEL, MEDIUM PLASTICITY, SLIGHTLY MOIST	CL	1.5	PID=0 ppm α=0 ppm βΓ=60-80 cpm
19.5	110250 03/25/93 14:05	17 4 3	12	STIFF, BROWN (10YR 5/3), SILTY SANDY CLAY WITH SOME GRAVEL, MEDIUM PLASTICITY, MOIST	CL	1.0	PID=0 ppm α=0 ppm βΓ=60-80 cpm

NOTES:

Boring Contractor: PENNSYLVANIA DRILLING
Driller: DAVE NEWMAN, JEFF BENTLEY

SAA = Same as Above
PID = Photoionization Detector
N/A = Not Applicable

1259

PROJECT NUMBER: 20.03.05	PROJECT NAME: CRU2 RI PHASE II FIELD INVESTIGATION	
BORING NUMBER: 2945	COORDINATES: NORTH 477972.18 EAST 1379119.93	DATE:19-MAR-93
GROUND ELEVATION: 566.7	GWL: Depth 43.5 Date/Time 02-Apr-93 08:30	DATE STARTED: 19-MAR-93
ENGINEER/GEOLOGIST: KEN GEIGER	Depth 43.6 Date/Time 07-Apr-93 08:30	DATE COMPLETE: 07-APR-93
DRILLING METHOD: CABLE TOOL		

DEPTH	SAMPLE DATE TIME	BLOWS ON SAMPLE	RECOVERY INCHES		USCS SYMBOL	TSF	REMARKS
19.5 21.0	110251 03/25/93 14:20	3 4 3	10	LOOSE, DARK YELLOWISH BROWN (10YR 4/4), POORLY GRADED SAND WITH SOME CLAY, SLIGHTLY MOIST	SP	N/A	PID=0 ppm α=0 ppm βΓ=60-80 cpm
21.0 25.0	03/25/93 14:20	N/A	N/A	NO SAMPLE TAKEN. SAMPLES TO BE TAKEN EVERY 5 FT STARTING AT 25.0 FT	N/A	N/A	
25.0 27.0	110252 03/29/93 14:30	48 49 50	13	VERY DENSE, DARK YELLOWISH BROWN (10YR 4/4), WELL GRADED SAND WITH SOME GRAVEL, DRY	SW	N/A	PID=0 ppm α=0 ppm βΓ=60 cpm
30.0 21.5	110254 03/29/93 16:15	9 14 21	10	DENSE, DARK YELLOWISH BROWN (10YR 4/4), POORLY GRADED GRAVELLY SAND WITH ROCK FRAGMENTS, DRY	SP	N/A	PID=0 ppm α=0 ppm βΓ=40-60 cpm
35.0 36.5	110255 03/30/93 10:40	41 50	7	VERY DENSE, DARK YELLOWISHY BROWN (10YR 4/4), POORLY GRADED SAND WITH SOME GRAVEL, SLIGHTLY MOIST	SP	N/A	PID=0 ppm α=0 ppm βΓ=40-60 cpm
40.0 41.5	110256 03/03/93 14:05	25 41 50	12	VERY DENSE, BROWN (10YR 5/3), POORLY GRADED GRAVELY SAND, DRY	SP	N/A	PID=0 ppm α=0 ppm βΓ=40-60 cpm
41.5 43.0	110257 03/30/93 15:25	50	4	VERY DENSE, BROWN (10YR 5/3), POORLY GRADED GRAVELLY SAND, SLIGHTLY MOIST	SP	N/A	PID=0 ppm α=0 ppm βΓ=40-60 cpm
43.0 44.5	110258 03/30/93 15:50	32 40 50	13	VERY DENSE, BROWN (10YR 5/3), WELL GRADED SAND WITH SOME GRAVEL, WET	SW	N/A	PID=0 ppm α=0 ppm βΓ=40-60 cpm
44.5 46.0	110259 03/30/93 16:40	10 13 31	16	DENSE, BROWN (10YR 5/3), POORLY GRADED SAND WITH SOME GRAVEL, WET	SP	N/A	PID=0 ppm α=0 ppm βΓ=40-60 cpm
46.0 47.5	110260 03/30/93 16:55	12 14 17	12	DENSE, BROWN (10YR 4/3) POORLY GRADED SAND WITH SOME GRAVEL, WET	SP	N/A	PID=0 ppm α=0 ppm βΓ=40-60 cpm
47.5 49.0	110261 03/30/93 08:45	7 14 21	13	DENSE, BROWN (10YR 4/3), POORLY GRADED SAND WITH SOME GRAVEL, WET	SP	N/A	PID=0 ppm α=0 ppm βΓ=60 cpm
49.0 50.5	110262 03/31/93 09:00	4 13 14	12	MEDIUM DENSE, BROWN (10YR 4/3), POORLY GRADED SAND WITH SOME GRAVEL, WET	SP	N/A	PID=0 ppm α=0 ppm βΓ=60 cpm
50.5 52.0	110263 03/31/93 09:30	8 14 12	12	MEDIUM DENSE, BROWN (10YR 4/3), POORLY GRADED SAND WITH SOME GRAVEL, WET	SP	N/A	PID=0 ppm α=0 ppm βΓ=60 cpm

NOTES:

Boring Contractor: PENNSYLVANIA DRILLING
Driller: DAVE NEWMAN, JEFF BENTLEY

SAA = Same as Above
PID = Photoionization Detector
N/A = Not Applicable

1260

5174

PROJECT NUMBER: 20.03.05	PROJECT NAME: CRU2 RI PHASE II FIELD INVESTIGATION	
BORING NUMBER: 2945	COORDINATES: NORTH 477972.18 EAST 1379119.93	DATE:19-MAR-93
GROUND ELEVATION: 566.7	GWL: Depth 43.5 Date/Time 02-Apr-93 08:30	DATE STARTED: 19-MAR-93
ENGINEER/GEOLOGIST: KEN GEIGER	Depth 43.6 Date/Time 07-Apr-93 08:30	DATE COMPLETE: 07-APR-93
DRILLING METHOD: CABLE TOOL		

DEPTH	SAMPLE	DATE TIME	BLOWS ON SAMPLE	RECOVERY	INCHES		USCS SYMBOL	TSF	REMARKS
52.0 53.5	110264	03/31/93 09:45	6 9 8	14		MEDIUM DENSE, BROWN (10YR 4/3), POORLY GRADED SAND WITH SOME GRAVEL, WET	SP	N/A	PID=0 ppm α=0 ppm βΓ=60 cpm
53.5 55.0	110265	03/31/93 10:00	11 14 10	18		MEDIUM DENSE, BROWN (10YR 4/3), POORLY GRADED SAND WITH SOME GRAVEL, WET	SP	N/A	PID=0 ppm α=0 ppm βΓ=40 cpm

NOTES:

Boring Contractor: PENNSYLVANIA DRILLING
Driller: DAVE NEWMAN, JEFF BENTLEY

SAA = Same as Above
PID = Photoionization Detector
N/A = Not Applicable

PROJECT NUMBER: 20.03.05	PROJECT NAME: CRU2 RI PHASE II FIELD INVESTIGATION	
BORING NUMBER: 2954	COORDINATES: NORTH 477804.29 EAST 1379406.47	DATE:21-MAY-93
GROUND ELEVATION: 576	GWL: Depth 53 Date/Time 28-May-93 08:30	DATE STARTED: 21-MAY-93
ENGINEER/GEOLOGIST: KEN GEIGER	Depth Date/Time	DATE COMPLETE: 07-JUN-93
DRILLING METHOD: CABLE TOOL		

DEPTH	SAMPLE / DATE TIME	BLOWS ON SAMPLE	RECOVERY / INCHES		USCS SYMBOL	TSF	REMARKS
1.5	113192 05/21/93 09:50	2 5 9	9	STIFF, DARK YELLOWISH BROWN, (10YR, 4/4) SILTY CLAY WITH SOME GRAVEL, MEDIUM PLASTICITY, SLIGHTLY MOIST	CL	1.5	PID=3 ppm α=0 ppm βΓ=40-60 cpm
1.5 3.0	113193 05/21/93 09:55	6 11 15	6	VERY STIFF, DARK YELLOWISH BROWN, (10YR, 3/6), SILTY CLAY WITH SOME GRAVEL, MEDIUM PLASTICITY, SLIGHTLY MOIST	CL	3.0	PID=1 ppm α=0 ppm βΓ=40-60 cpm
3.0 4.5	113194 05/21/93 10:00	10 16 15	7	STIFF, OLIVE BROWN, (2.5Y, 4/4), SILTY CLAY WITH SOME GRAVEL, MEDIUM PLASTICITY, SLIGHTLY MOIST	CL	1.5	PID=1 ppm α=0 ppm βΓ=40-60 cpm
4.5 6.0	113195 05/21/93 10:05	10 19 16	13	VERY STIFF, OLIVE BROWN, (2.5Y, 4/4), SILTY CLAY WITH SOME GRAVEL, MEDIUM PLASTICITY, SLIGHTLY MOIST	CL	2.25	PID=1 ppm α=0 ppm βΓ=40-60 cpm
6.0 7.5	113196 05/21/93 10:10	13 13 15	10	STIFF, OLIVE BROWN (2.5Y, 4/4) SILTY CLAY WITH A TRACE OF GRAVEL, MEDIUM PLASTLICITY, SLIGHTLY MOIST	CL	1.5	PID=1 ppm α=0 ppm βΓ=40-60 cpm
7.5 9.0	113197 05/21/93 10:15	12 10 8	12	VERY SOFT, OLIVE BROWN, (2.5Y, 4/3), SILTY CLAY WITH A TRACE OF GRAVEL, MEDIUM PLASTICITY, MOIST	CL	.25	PID=1 ppm α=0 ppm βΓ=40-60 cpm
9.0 10.5	113198 05/21/93 10:20	8 9 10	18	STIFF, OLIVE BROWN, (2.5Y, 4/4), SILTY CLAY WITH A TRACE OF GRAVEL, MEDIUM PLASTICITY, SLIGHTLY MOIST	CL	2.0	PID=1 ppm α=0 ppm βΓ=40-60 cpm
10.5 12.0	113199 05/21/93 10:25	9 9 9	18	MEDIUM STIFF, OLIVE BROWN, (2.5Y, 4/4), SILTY CLAY WITH A TRACE OF GRAVEL, MEDIUM PLASTICITY, MOIST	CL	.75	PID=1 ppm α=0 ppm βΓ=60-80 cpm
12.0 13.5	113200 05/21/93 10:30	9 10 15	18	SOFT, OLIVE BROWN, (2.5Y, 4/3), SANDY SILTY CLAY WITH SOME GRAVEL, MEDIUM PLASTICITY, SLIGHTLY MOIST	CL	.5	PID=1 ppm α=0 ppm βΓ=40-60 cpm
13.5 15.0	113201 05/24/93 10:20	1 5 16	12	STIFF, OLIVE BROWN, (2.5Y, 4/4), SILTY SAND, CLAY WITH SOME GRAVEL, MEDIUM PLASTICITY, SLIGHTLY MOIST	CL	2	PID=.7 ppm α=0 ppm βΓ=60 cpm
15.0 16.5	113202 05/24/93 10:30	8 18 18	7	STIFF, LIGHT OLIVE BROWN, (2.5Y, 5/4), SANDY, SILTY CLAY WITH A TRACE OF GRAVEL, LOW PLASTICITY, SLIGHTLY MOIST	CL	1.0	PID=.9 ppm α=0 ppm βΓ=40-60 cpm
16.5 18.0	113203 05/24/93 10:45	9 14 25	14	HARD, LIGHT OLIVE BROWN, (2.5Y, 5/4), SANDY, SILTY CLAY WITH SOME GRAVEL, LOW PLASTICITY, SLIGHTLY MOIST	CL	4	PID=.9 ppm α=0 ppm βΓ=40-60 cpm
18.0 19.5	113204 05/24/93 14:00	14 20 23	13	VERY STIFF, LIGHT OLIVE BROWN, (2.5Y, 5/4), SILTY CLAY WITH A TRACE OF GRAVEL AND SAND, LOW PLASTICITY, SLIGHTLY MOIST	CL	3.5	PID=.9 ppm α=0 ppm βΓ=40-60 cpm

NOTES:
BACKGROUND: 5/21/93 HNU=.8 PPM, BETA GAMMA=40-60 CPM, ALPHA=0 CPM, 5/24/93 HNU=.7 PPM, BETA GAMMA=40-60 CPM, ALPHA=0 CPM, 5/25/93 HNU=0 PPM, BETA GAMMA=40-60 CPM, ALPHA=0 CPM, 5/25/93 HNU=1.0 PPM, BETA GAMMA=40-60 CPM, ALPHA=0 CPM

Boring Contractor: PENNSYLVANIA DRILLING
Driller: DAVE NEWMAN

SAA = Same as Above
PID = Photoionization Detector
N/A = Not Applicable

1262

5174

PROJECT NUMBER: 20.03.05	PROJECT NAME: CRU2 RI PHASE II FIELD INVESTIGATION	
BORING NUMBER: 2954	COORDINATES: NORTH 477804.29 EAST 1379406.47	DATE:21-MAY-93
GROUND ELEVATION: 576	GWL: Depth 53 Date/Time 28-May-93 08:30	DATE STARTED: 21-MAY-93
ENGINEER/GEOLOGIST: KEN GEIGER	Depth Date/Time	DATE COMPLETE: 07-JUN-93
DRILLING METHOD: CABLE TOOL		

DEPTH	SAMPLE / DATE TIME	BLOWS ON SAMPLE	RECOVERY INCHES		USCS SYMBOL	TSF	REMARKS
19.5 21.0	113205 05/25/93 10:00	5 10 15	12	VERY STIFF, OLIVE BROWN, (2.5Y, 4/4), SILTY CLAY WITH A TRACE OF GRAVEL, MEDIUM PLASTICITY, SLIGHTLY MOIST	CL	2.5	PID=.4 ppm α=0 ppm βΓ=40-60 cpm
21.0 22.5	113206 05/25/93 10:30	11 27 29	13	HARD, DARK GRAY, (2.5Y, 4/1), SILTY CLAY WITH SOME GRAVEL, MEDIUM PLASICITY, SLIGHTLY MOIST	CL	4	PID=.3 ppm α=0 ppm βΓ=40-60 cpm
22.5 24.0	113207 05/25/93 14:45	10 18 32	5	SOFT, DARK GRAY, (2.5Y, 4/1), SANDY SILTY CLAY WITH SOME GRAVEL, MEDIUM PLASTICITY, SLIGHTLY MOIST	CL	.25	PID=.2 ppm α=0 ppm βΓ=40-60 cpm
24.0 25.5	113208 05/25/93 15:10	38 50	7	VERY DENSE, BROWN, (10YR, 4/3), POORLY GRADED SAND WITH SOME GRAVEL, SLIGHTLY MOIST	SP	N/A	PID=.3 ppm α=0 ppm βΓ=40-60 cpm
30.0 31.5	113209 05/25/93 15:35	12 18 27	7	DENSE, BROWN, (10YR, 4/3), POORLY GRADED SAND WITH SOME GRAVEL, DRY	SP	N/A	PID=.3 ppm α=0 ppm βΓ=40-60 cpm
35.0 36.5	113210 05/26/93 10:10	50	6	VERY DENSE, BROWN, (10YR, 4/3), POORLY GRADED SAND WITH SOME GRAVEL, DRY	SP	N/A	PID=1.1 ppm α=0 ppm βΓ=40-60 cpm
40.0 41.5	113211 05/26/93 10:30	22 42 50	12	VERY DENSE, BROWN, (10YR, 4/3), WELL GRADED SAND WITH SOME GRAVEL, DRY	SW	N/A	PID=1.4 ppm α=0 ppm βΓ=40-60 cpm
45.0 46.5	113212 05/26/93 14:25	50	4	VERY DENSE, BROWN, (10YR, 4/3), POORLY GRADED, GRAVELLY SAND WITH SOME SILT AND ROCK FRAGMENTS, SLIGHTLY MOIST	SP	N/A	PID=1.0 ppm α=0 ppm βΓ=40-60 cpm
46.5 48.0	113213 05/26/93 14:55	17 50	8	VERY DENSE, BROWN, (10YR, 4/3), POORLY GRADED SAND WITH SOME GRAVEL, SLIGHTLY MOIST	SP	N/A	PID=1.4 ppm α=0 ppm βΓ=40-60 cpm
48.0 49.5	113214 05/27/93 09:00	21 50	7	VERY DENSE, DARK YELLOWISH BROWN, (10YR, 4/6), POORLY GRADED GRAVELLY SAND, SLIGHTLY MOIST	SP	N/A	PID=.4 ppm α=0 ppm βΓ=40-60 cpm
49.5 51.0	113215 05/27/93 10:15	50	4	VERY DENSE, DARK YELLOWISH BROWN, (10YR, 4/6), POORLY GRADED GRAVELLY SAND, WET	SP	N/A	PID=.5 ppm α=0 ppm βΓ=40-60 cpm
51.0 52.5	113216 05/27/93 10:45	40 50	8	VERY DENSE, DARK YELLOWISH BROWN, (10YR, 4/6), POORLY GRADED GRAVELLY SAND, WET	SP	N/A	PID=.5 ppm α=0 ppm βΓ=40-60 cpm
52.5 54.0	113217 05/27/93 14:30	9 23 48	18	VERY DENSE, BROWN, (10YR, 4/3), WELL GRADED SAND WITH SOME GRAVEL, WET	SW	N/A	PID=.5 ppm α=0 ppm βΓ=40-60 cpm

NOTES:
BACKGROUND: 5/21/93 HNU=.8 PPM, BETA GAMMA=40-60 CPM, ALPHA=0 CPM, 5/24/93 HNU=.7 PPM, BETA GAMMA=40-60 CPM, ALPHA=0 CPM, 5/25/93 HNU=0 PPM, BETA GAMMA=40-60 CPM, ALPHA=0 CPM, 5/25/93 HNU=1.0 PPM, BETA GAMMA=40-60 CPM, ALPHA=0 CPM

Boring Contractor: PENNSYLVANIA DRILLING
Driller: DAVE NEWMAN

SAA = Same as Above
PID = Photoionization Detector
N/A = Not Applicable

1263

5174

PROJECT NUMBER: 20.03.05	PROJECT NAME: CRU2 RI PHASE II FIELD INVESTIGATION	
BORING NUMBER: 2954	COORDINATES: NORTH 477804.29 EAST 1379406.47	DATE:21-MAY-93
GROUND ELEVATION: 576	GWL: Depth 53 Date/Time 28-May-93 08:30	DATE STARTED: 21-MAY-93
ENGINEER/GEOLOGIST: KEN GEIGER	Depth Date/Time	DATE COMPLETE: 07-JUN-93
DRILLING METHOD: CABLE TOOL		

DEPTH	SAMPLE	DATA TIME	BLOWS ON SAMPLE	RECOVERY	INCHES		USCS SYMBOL	TSF	REMARKS
54.0 55.5	113218 05/27/93 14:40		3 13 29	12		DENSE, BROWN, (10YR, 4/3), WELL GRADED SAND WITH SOME GRAVEL, WET	SW	N/A	PID=.5 ppm α=0 ppm βΓ=40-60 cpm
55.5 57.0	113219 05/27/93 15:00		8 16 21	13		DENSE, BROWN, (10YR, 4/3), WELL GRADED SAND WITH SOME GRAVEL, WET	SW	N/A	PID=.6 ppm α=0 ppm βΓ=40-60 cpm
57.0 58.5	113220 05/27/93 15:10		6 6 6	18		MEDIUM DENSE, BROWN, (10YR, 4/3), WELL GRADED SAND WITH A TRACE OF GRAVEL, WET	SW	N/A	PID=.6 ppm α=0 ppm βΓ=40-60 cpm
58.5 60.0	113221 05/27/93 15:20		3 6 10	14		MEDIUM DENSE, BROWN, (10YR, 4/3), POORLY GRADED SAND WITH A TRACE OF GRAVEL, WET	SP	N/A	PID=.6 ppm α=0 ppm βΓ=40-60 cpm
60.0 65.0	05/27/93 15:20		N/A	N/A		SPLIT SPOON SAMPLED TO 60' BOTTOM OF BORING AT 65'	N/A	N/A	

NOTES:
BACKGROUND: 5/21/93 HNU=.8 PPM, BETA GAMMA=40-60 CPM, ALPHA=0 CPM, 5/24/93 HNU=.7 PPM, BETA GAMMA=40-60 CPM, ALPHA=0 CPM, 5/25/93 HNU=0 PPM, BETA GAMMA=40-60 CPM, ALPHA=0 CPM, 5/25/93 HNU=1.0 PPM, BETA GAMMA=40-60 CPM, ALPHA=0 CPM

Boring Contractor: PENNSYLVANIA DRILLING
Driller: DAVE NEWMAN

SAA = Same as Above
PID = Photoionization Detector
N/A = Not Applicable

1264

PROJECT NUMBER: 602 3.2	PROJECT NAME: CRU2 RI PHASE I FIELD INVESTIGATION	
BORING NUMBER: 3044	COORDINATES: NORTH 477773.57 EAST 1378162.79	DATE:01-MAR-88
GROUND ELEVATION: 571.8	GWL: Depth Date/Time	DATE STARTED: 01-MAR-88
ENGINEER/GEOLOGIST: T. SULLIVAN	Depth Date/Time	DATE COMPLETE: 07-MAR-88

DRILLING METHOD: CABLE-TOOL DRILLING

DEPTH	SAMPLE	DATE TIME	BLOWS ON SAMPLE	RECOVERY	INCHES		USCS SYMBOL	TSF	REMARKS
1.5	008083	03/01/88 10:10	2 3 4	13		STIFF, BROWN 10YR 4/2 ORGANIC RICH SILT AND CLAY, ABUNDANT ROOTS, DRY. VERY STIFF, YELLOW-BROWN 10YR 4/4 CLAY, TRACE ORGANIC MATERIAL. ML	ML CL CL	0.5 1.5 2.7	PID=0 ppm α=0 ppm βΓ=100 cpm
1.5 3.0	008084	03/01/88 10:30	2 3 6	14		VERY STIFF, YELLOW-BROWN 10YR 4/4 CLAY, SLIGHTLY MOTTLED, DRY.	CL	2.5	PID=0 ppm α=0 ppm βΓ=80 cpm
3.0 4.5	008085	03/01/88 10:35	3 6 7	15		VERY STIFF, YELLOW-BROWN 10YR 4/4 CLAY, TRACE SILT, SLIGHTLY MOTTLED, 1" SILT LENS AT 4.3', DRY.	CL	2.75	PID=0 ppm α=4 ppm βΓ=140 cpm
4.5 6.0	008086	03/01/88 10:40	7 10 9	18		HARD, YELLOW-BROWN 10YR 5/4 CLAY, SLIGHTLY MOTTLED, TRACE SILT IN BOTTOM 2", DRY.	CL	4.25	PID=0 ppm α=2 ppm βΓ=120 cpm
6.0 7.5	008087	03/01/88 10:42	10 11 11	16		VERY STIFF, YELLOW-BROWN 10YR 5/4 MOTTLED WITH LIGHT GRAY 10YR 6/3 CLAY, TRACE SILT, DRY. VERY STIFF, YELLOW-BROWN 10YR 6/4 CLAY WITH SOME FINE GRAVEL, TRACE SILT, DRY.	CL CL	3.0 3.2	PID=0 ppm α=2 ppm βΓ=100 cpm
7.5 9.0	008090	03/01/88 14:30	N/A	N/A			N/A	N/A	
9.0 10.5	008091	03/01/88 14:50	3 11 13	10		MED. DENSE, YELLOW-BROWN 10YR 4/4 SAND, SOME SILT, SOME CLAY, TRACE GRAVEL, MOIST, SANDY CLAY LESS AT 9.6' AND 10.0', 1" THICK. MED. DENSE YELLOW-BROWN 10YR 4/4 SAND, SOME SILT AND CLAY, TRACE FINE GRAVEL, MOIST.	SM SM	N/A	PID=0 ppm α=0 ppm βΓ=80 cpm
10.5 12.0	008092	03/01/88 15:15	10 8 14	6		VERY STIFF, YELLOW-BROWN 10YR 5/4 CLAY, TRACE GRAVEL, DRY.	CL	2.5	PID=0 ppm α=0 ppm βΓ=80 cpm
12.0 13.5	008093	03/01/88 15:25	4 9 9	11		MED. STIFF, GRAY 10YR 4/1 SANDY CLAY, SOME SILT, MOIST, BOTTOM 3" VERY SANDY.	CL	1.0	PID=0 ppm α=0 ppm βΓ=80 cpm
13.5 15.0	008094	03/01/88 15:40	4 4 3	1		GRAY-BROWN 10YR 4/3 SANDY CLAY, TRACE GRAVEL, SOME SILT, MOIST.	CL	N/A	PID=0 ppm α=2 ppm βΓ=80 cpm
15.0 16.5	008095	03/01/88 16:05	2 2 3	1		GRAY, 10 YR 4/1 CLAY, SOME SILT AND SAND, TRACE GRAVEL, MOIST.	CL	N/A	PID=0 ppm α=0 ppm βΓ=80 cpm
16.5 18.0	008096	03/01/88 16:15	3 2 5	6		STIFF, GRAY 10 YR 1 CLAY, TRACE SILT, TRACE GRAVEL, MOIST.	CL	1.5	PID=0 ppm α=0 ppm βΓ=80 cpm

NOTES:

SAA = Same as Above
PID = Photoionization Detector
N/A = Not Applicable

1265

5174

PROJECT NUMBER: 602 3.2	PROJECT NAME: CRU2 RI PHASE I FIELD INVESTIGATION	
BORING NUMBER: 3044	COORDINATES: NORTH 477773.57 EAST 1378162.79	DATE:01-MAR-88
GROUND ELEVATION: 571.8	GWL: Depth Date/Time	DATE STARTED: 01-MAR-88.
ENGINEER/GEOLOGIST: T. SULLIVAN	Depth Date/Time	DATE COMPLETE: 07-MAR-88
DRILLING METHOD: CABLE-TOOL DRILLING		

DEPTH	SAMPLE	DATA / TIME	BLOWS ON SAMPLE	RECOVERY INCHES		USCS SYMBOL	TSF	REMARKS
18.0 19.5	008097 03/01/88 16:30	7 26 26	5	VERY DENSE, GRAY-BROWN 10YR 5/2 COARSE SAND, SOME GRAVEL, SOME SILT AND CLAY, MOIST. HARD, GRAY-BROWN 10YR 5/2 CLAY, SOME COARSE GRAVEL, TRACE SILT, DRY.	SM CL	N/A >5	PID=0 ppm α=0 ppm βΓ=80 cpm
19.5 21.0	008098 03/01/88 17:25	15 25 28	8	HARD, GRAY-GREEN 5Y 3/2 CLAY, TRACE SILT, TRACE GRAVEL, DRY.	CL	>5	PID=0 ppm α=2 ppm βΓ=100 cpm
21.0 22.5	008099 03/02/88 08:05	8 15 21	13	DENSE, YELLOW-BROWN 10YR 4/4 FINE TO MEDIUM SAND, TRACE SILT, DRY.	SM	N/A	PID=0 ppm α=0 ppm βΓ=80 cpm
22.5 24.0	008100 03/02/88 08:20	9 19 23	14	DENSE, YELLOW-BROWN 10YR 4/4 FINE GRAINED SAND, TRACE SILT, DRY.	SM	N/A	PID=0 ppm α=2 ppm βΓ=60 cpm
24.0 25.5	008101 03/02/88 08:50	9 10 18	11	MED. DENSE, YELLOW-BROWN 10YR 5/4 VERY FINE SAND, SOME SILT, DRY.	SM	N/A	PID=0 ppm α=2 ppm βΓ=100 cpm
30.0 31.5	008102 03/02/88 10:35	6 11 13	9	MED. DENSE, GRAY 10YR 5/3 FINE SAND, SOME SILT, DRY.	SM	N/A	PID=0 ppm α=2 ppm βΓ=100 cpm
35.0 36.5	008103 03/02/88 11:00	18 17 22	12	DENSE, TAN 10YR 5/4 VERY FINE SAND, SOME SILT, DRY, GRAVEL IN BOTTOM 2".	SM	N/A	PID=0 ppm α=2 ppm βΓ=100 cpm
40.0 41.5	008104 03/02/88 13:35	14 22 30	11	VERY DENSE, TAN 10YR 5/4 MED. TO COARSE SAND, TRACE SILT, SOME GRAVEL, DRY.	SM	N/A	PID=0 ppm α=2 ppm βΓ=80 cpm
50.0 51.5	008246 03/02/88 15:20	11 16 18	13	DENSE, GRAY-BROWN 10YR 4/3, MEDIUM-COARSE SAND, TRACE SILT, TRACE FINE GRAVEL, WET.	SM	N/A	PID=0 ppm α=0 ppm βΓ=100 cpm
55.0 56.5	008247 03/02/88 15:45	8 8 11	8		SM	N/A	PID=0 ppm α=0 ppm βΓ=80 cpm
60.0 61.5	008248 03/05/88 10:10	5 12 21	13	DENSE, BROWN-GRAY 10YR 4/2 MEDIUM SAND, SOME SILT, TRACE FINE GRAVEL, WET.	SM	N/A	PID=0 ppm α=0 ppm βΓ=60 cpm
65.0 66.5	008249 03/02/88 13:10	5 12 14	13	MED. DENSE, BROWN-GRAY 10YR 4/2 MEDIUM SAND, SOME SILT, TRACE FINE TO COARSE GRAVEL, WET.	SM	N/A	PID=0 ppm α=0 ppm βΓ=80 cpm
70.0 71.5	008250 03/05/88 15:00	22 53 34	17	VERY DENSE, BROWN-GRAY 10YR 4/2 MEDIUM TO COARSE SAND, GRAVELLY, SOME SILT, WET. DENSE, BROWN-GRAY 10YR 4/2 COARSE SAND, GRAVELLY, SOME SILT, WET.	SW SW	N/A	PID=0 ppm α=2 ppm βΓ=100 cpm

NOTES:

SAA = Same as Above
PID = Photoionization Detector
N/A = Not Applicable

1266

5174

PROJECT NUMBER: 602 3.2	PROJECT NAME: CRU2 RI PHASE I FIELD INVESTIGATION	
BORING NUMBER: 3044	COORDINATES: NORTH 477773.57 EAST 1378162.79	DATE:01-MAR-88
GROUND ELEVATION: 571.8	GWL: Depth Date/Time	DATE STARTED: 01-MAR-88
ENGINEER/GEOLOGIST: T. SULLIVAN	Depth Date/Time	DATE COMPLETE: 07-MAR-88
DRILLING METHOD: CABLE-TOOL DRILLING		

DEPTH	SAMPLE	DATE TIME	BLOWS ON SAMPLE	RECOVERY	INCHES		USCS	SYMBOL	TSF	REMARKS
75.0 76.5	008251	03/05/88 15:35	9 13 14	18		MED-DENSE, GRAY-BROWN 10YR, 4/3 MEDIUM SAND, TRACE SILT, WET.	SM		N/A	PID=0 ppm α=2 ppm βΓ=90 cpm
80.0 81.5	008252	03/05/88 15:55	4 10 12	17		MED. DENSE, BROWN 10YR 4/2 FINE-MEDIUM SAND, SOME SILT, WET. MED. DENSE, BROWN 10YR 4/2 MEDIUM TO COARSE SAND, SOME COARSE GRAVEL, SOME SILT, WET.	SM SP		N/A N/A	PID=0 ppm α=2 ppm βΓ=80 cpm
85.0 86.5	008253	03/05/88 17:25	12 24 24	18		DENSE, BROWN 10YR 4/2 FINE TO MEDIUM SAND, SOME SILT, WET. DENSE, BROWN 10YR 4/2 SANDY GRAVEL, MEDIUM TO COARSE SAND, SOME PEBBLES, SOME SILT, WET.	SM GP		N/A N/A	PID=0 ppm α=0 ppm βΓ=100 cpm
90.0 91.5	008254	03/06/88 08:25	5 6 7	11		MED-DENSE, BROWN, 10YR 4/2 FINE SAND, SOME SILT, UNIFORM GRAIN SIZE, WET. GRAVELLY LENS AT 90.1 TO 90.2 FT.	SM		N/A	PID=0 ppm α=0 ppm βΓ=60 cpm
95.0 96.5	008255	03/06/88 10:30	15 22 24	16		DENSE, BROWN 10YR 3/3 VERY FINE SAND, WELL GRADED, SOME SILT, WET.	SM		N/A	PID=0 ppm α=0 ppm βΓ=40 cpm
100.0 101.5	008256	03/06/88 11:00	5 4 5	18		LOOSE, GRAY-BROWN 10YR 4/2 VERY FINE GRAINED SAND, SOME SILT, SOME CLAY, WET.	SM		N/A	PID=0 ppm α=2 ppm βΓ=60 cpm
105.0 106.5	008257	03/06/88 13:35	2 3 4	16		LOOSE, GRAY 10YR 3/1 FINE SAND, SOME SILT, TRACE CLAY, WELL GRADED, WET.	SM		N/A	PID=0 ppm α=0 ppm βΓ=80 cpm
110.0 111.5	008258	03/06/88 14:50	5 9 13	16		MED-DENSE, GRAY 10YR 4/1, FINE SAND, SOME SILT, TRACE CLAY, WET. GRAY 10YR 4/1, VERY FINE SAND AND SILT, SOME CLAY, WET.	SM ML		N/A N/A	PID=0 ppm α=2 ppm βΓ=80 cpm
115.0 116.5	008259	03/06/88 16:30	5 15 28	18		DENSE, GRAY 10YR 4/1, FINE-MEDIUM SAND, SOME SILT, TRACE CLAY, WET	SM		N/A	PID=0 ppm α=0 ppm βΓ=60 cpm
120.0 121.5	008260	03/06/88 17:45	8 24 26	18		DENSE, GRAY 10YR 4/1 FINE SAND, SOME SILT, TRACE CLAY, WET.	SM		N/A	PID=0 ppm α=0 ppm βΓ=60 cpm
125.0 126.5	008261	03/07/88 09:20	4 7 8	18		STIFF, GRAY-GREEN 5YR 4/1 CLAY, SOME SILT, MOIST.	CL		1.25	PID=0 ppm α=2 ppm βΓ=60 cpm

NOTES:

SAA = Same as Above
PID = Photoionization Detector
N/A = Not Applicable

1267

PROJECT NUMBER: 602 3.2	PROJECT NAME: CRU2 RI PHASE I FIELD INVESTIGATION	
BORING NUMBER: 3046	COORDINATES: NORTH 478051.23 EAST 1379438.66	DATE:22-MAY-90
GROUND ELEVATION: 576.46	GWL: Depth Date/Time	DATE STARTED: 22-MAY-90
ENGINEER/GEOLOGIST: M. SWANSON	Depth Date/Time	DATE COMPLETE: 04-JUN-90
DRILLING METHOD: CABLE-TOOL DRILLING		

DEPTH	SAMPLE	DATA TIME	BLOWS ON	SAMPLE	RECOVERY	INCHES		USCS SYMBOL	TSF	REMARKS
75.0 76.5	032704	05/24/90 10:41	16 21 27		18		DENSE, GRAY TO DARK GRAY (10 YR 5/1 TO 4/1) WELL GRADED COARSE SAND, SOME SILT AND COBBLES (TO .75 IN.), SATURATED	SW	N/A	PID=0.1 ppm α=0 ppm βΓ=60-85 cpm
80.0 81.5	032705	05/30/90 09:05	10 21 22		15		DENSE, DARK GRAYISH BROWN (10 YR 4/2) POORLY GRADED FINE SAND; TRACE OF SUBROUNDED PEBBLES; SOME SILT, SATURATED	SP	N/A	PID=0.2 ppm α=0 ppm βΓ=40-50 cpm
85.0 86.5	032706	05/30/90 09:25	15 20 22		18		DENSE, DARK BROWN (7.5 YR 4/2) SILTY FINE GRAINED POORLY GRADED SAND, SOME ROUNDED PEBBLES, (TO .2 IN.) SATURATED.	SM	N/A	PID=0.2 ppm α=0 ppm βΓ=40-60 cpm
90.0 91.5	032707	05/30/90 09:56	7 7 8		15		MEDIUM DENSE, BROWN (10 YR 5/3), SILTY WELL GRADED COARSENING SAND, SOME ROUNDED PEBBLES, SATURATED	SM	N/A	PID=0.1 ppm α=0 ppm βΓ=50-70 cpm
100.0 101.5	032709	05/30/90 14:18	3 9 22		18		DENSE, GRAYISH BROWN (10 YR 5/2) WELL GRADED COARSE SAND, SOME SILT, SATURATED	SW	N/A	PID=0.1 ppm α=0 ppm βΓ=60-80 cpm
105.0 106.5	032710	05/30/90 16:20	9 11 15		16		MEDIUM DENSE, GRAYISH BROWN (10 YR 5/2), WELL GRADED FINE SAND, SOME SILT, SATURATED	SW	N/A	PID=0.1 ppm α=0 ppm βΓ=40-50 cpm
110.0 111.5	032711	05/30/90 16:42	2 3 11		14		MEDIUM DENSE, DARK GRAY (2.5 Y 4/0), WELL GRADED FINE SAND, SOME SILT, TRACE OF ROUNDED PEBBLES (TO .25 IN.); SATURATED	SW	N/A	PID=0.06 ppm α=0 ppm βΓ=60-70 cpm
115.0 116.5	032712	05/31/90 10:33	8 20 22		16		DENSE, DARK GRAY (10 YR 4/1), POORLY GRADED FINE SILTY SAND, SATURATED	SM	N/A	PID=0.15 ppm α=0 ppm βΓ=40-50 cpm
120.0 121.5	032713	05/31/90 14:41	6 13 20		13		DENSE, DARK GRAY (10 YR 4/1), WELL-GRADED SILTY SAND, SOME PEBBLES (TO .2 IN.), SUBROUNDED; COARSE SAND; SATURATED	SW	N/A	PID=0.15 ppm α=0 ppm βΓ=60-80 cpm
125.0 126.5	032714	05/31/90 15:52	7 9 18		17		MEDIUM DENSE, GRAY (2.5 Y 5/0), POORLY GRADED MEDIUM TO COARSE SAND, SOME SILT, SATURATED.	SP	N/A	PID=0.1 ppm α=0 ppm βΓ=40-70 cpm
130.0 131.5	032715	05/31/90 17:27	2 3 16		18		MEDIUM DENSE, DARK GRAY (2.5 Y 4/0) WELL GRADED GRAVEL-SAND MIXTURE, SOME SILT, GRAVEL TO 1.0 IN., FRACTURED LIMESTONE COBBLE, SATURATED	GW	N/A	PID=0.1 ppm α=0 ppm βΓ=40-60 cpm
135.0 136.5	032716	06/01/90 11:15	22 16 15		14		DENSE, GRAY (2.5 Y 5/0) SILT-GRAVEL-SAND MIXTURE, GRAVEL TO 1.25 IN., SATURATED	GM	N/A	PID=0.08 ppm α=0 ppm βΓ=50 cpm

NOTES:

SAA = Same as Above
PID = Photoionization Detector
N/A = Not Applicable

1268

5172 02/02/94 17:03

PROJECT NUMBER: 602 3.2	PROJECT NAME: CRU2 RI PHASE I FIELD INVESTIGATION	
BORING NUMBER: 3049	COORDINATES: NORTH 477021.22 EAST 1380061.42	DATE:01-NOV-88
GROUND ELEVATION: 540.7	GWL: Depth Date/Time	DATE STARTED: 01-NOV-88
ENGINEER/GEOLOGIST: L. ADAMS	Depth Date/Time	DATE COMPLETE: 14-NOV-88
DRILLING METHOD: CABLE-TOOL DRILLING		

DEPTH	SAMPLE	DATE TIME	BLOWS ON SAMPLE	RECOVERY	INCHES		USCS	SYMBOL	TSF	REMARKS
45.0 46.5	008980	11/02/88 14:40	20 24 44	10		VERY DENSE, GRAYISH BROWN (10 YR - 4/2) WELL GRADED GRAVEL SAND MIXTURE, WET.	GW		N/A	PID=0 ppm α=0 ppm βΓ=20 cpm
50.0 51.5	008981	11/02/88 15:45	6 8 9	14		MEDIUM DENSE GRAY-BROWN (10 YR 4/2) WELL GRADED GRAVELLY SAND - WET. STIFF, YELLOW BROWN (10 YR 5/3) GRAVELLY CLAY (TO .25 IN.) DAMP. MEDIUM DENSE GRAY-BROWN (10 YR 4/2) WELL GRADED GRAVEL SAND MIXTURE. (GRAVEL .25 TO .50 IN.) WET.	SW CL GW		N/A 2.0 N/A	PID=0 ppm α=0 ppm βΓ=20 cpm
55.0 56.5	008982	11/03/88 09:50	25 28 41	18		ENCOUNTERED BLOW SAND AT 55 FT. VERY DENSE, GRAY BROWN (10 YR - 4/3) WELL GRADED GRAVEL SAND MIXTURE (GRAVEL SIZE .25 - .75 IN.) WET	GW		N/A	PID=0 ppm α=0 ppm βΓ=20 cpm
60.0 61.5	008983	11/03/88 11:35	8 9 10	18		MED. DENSE, GRAY BROWN (YR 10 4/3) WELL GRADED GRAVEL SAND MIXTURE, VERY WET. MED. DENSE, GRAY ORANGISH BROWN POORLY GRADED SANDS, TRACE GRAVEL (10 YR 4/4) WET - (GRAVEL .5 IN.)	GW SP		N/A	PID=0 ppm α=0 ppm βΓ=20 cpm
65.0 66.5	008984	11/03/88 15:55	85 70 56	18		VERY DENSE, BROWN TO ORANGE-BROWN (10 YR 4/3) MED. TO WELL SORTED GRAVEL SAND MIXTURE (GRAVEL .1 - 1 IN.) WET	GW		N/A	PID=0 ppm α=2 ppm βΓ=20 cpm
70.0 71.5	008985	11/06/88 09:25	9 10 13	12		MED. DENSE, DARK GRAYISH BROWN (10 YR - 4/3) POORLY SORTED SAND, TRACE GRAVEL (3/8 IN.) DAMP-DRY, TRACE CLAY.	SC		N/A	PID=0 ppm α=0 ppm βΓ=80 cpm
75.0 76.5	008986	11/06/88 11:33	32 25 20	12		VERY DENSE, DARK BROWN GRAY (10 YR - 4/2) POORLY SORTED SAND, SOME GRAVEL (GRAVEL TO .8 IN.) DAMP	SP		N/A	PID=0 ppm α=0 ppm βΓ=40 cpm
80.0 81.5	008987	11/07/88 08:46	12 13 14	10		MED. DENSE DARK GRAYISH BROWN (10 YR - 3/3) POORLY SORTED, VERY FINE SAND, SOME GRAVEL. WET.	SP		N/A	PID=0 ppm α=0 ppm βΓ=100 cpm
85.0 86.5	008988	11/07/88 10:30	6 9 9	8		MED. DENSE - MED. TO DARK GRAYISH BROWN (10 YR - 4/2) POORLY GRADED GRAVELLY SAND (GRAVEL TO .75 IN.) WET.	SP		N/A	PID=0 ppm α=0 ppm βΓ=40 cpm
90.0 91.5	008989	11/07/88 15:10	13 14 10	11		MED. DENSE DARK GRAYISH BROWN (10 YR 4/2) MED. TO WELL SORTED GRAVELLY SAND (GRAVEL TO .75 IN.) WET.	SW		N/A	PID=0 ppm α=0 ppm βΓ=40-60 cpm
95.0 96.5	008990	11/07/88 16:26	18 16 15	6		DENSE - DARK GRAY BROWN (10 YR 4/2) WELL SORTED GRAVELLY SAND (GRAVEL TO .5 IN.) WET.	SW		N/A	PID=0 ppm α=1 ppm βΓ=40 cpm
100.0 101.5	008991	11/08/88 09:00	18 20 19	12		DENSE, GRAY BROWN (10 YR 4/2) POORLY SORTED FINE SAND. DAMP - MED. WET.	SP		N/A	PID=0 ppm α=0 ppm βΓ=20-40 cpm

NOTES:

SAA = Same as Above
PID = Photoionization Detector
N/A = Not Applicable

5174

PROJECT NUMBER: 602 3.2	PROJECT NAME: CRU2 RI PHASE I FIELD INVESTIGATION	
BORING NUMBER: 3065	COORDINATES: NORTH 477856.08 EAST 1380406.96	DATE:01-NOV-88
GROUND ELEVATION: 571.7	GWL: Depth Date/Time	DATE STARTED: 01-NOV-88
ENGINEER/GEOLOGIST: D. HOEKSTRA	Depth Date/Time	DATE COMPLETE: 09-NOV-88
DRILLING METHOD: CABLE-TOOL DRILLING		

DEPTH	SAMPLE	DATE TIME	BLOWS ON SAMPLE	RECOVERY INCHES		USCS SYMBOL	TSF	REMARKS
70.0 71.5	008928 11/03/88 09:20	17 25 30	12	VERY DENSE, GREY BROWN (10 YR 5/2) WELL GRADED GRAVELLY SAND (1/8" - 1/4") SOME FINES, WET. DARK GREY (10 YR 3/1) WELL GRADED GRAVELLY SAND, WET.		SP	N/A	PID=0 ppm α=0-2 ppm βΓ=70 cpm
75.0 76.5	008929 11/03/88 11:15	8 40 66	18	VERY DENSE, DARK YELLOWISH BROWN, (10 YR 3/2), VERY WELL GRADED GRAVELLY SAND (MEDIUM SAND TO 1" GRAVEL), LITTLE OF NO FINES, WET. BROWN TO YELLOW BROWN, (10 YR 4/2) POORLY GRADED MEDIUM SAND NO GRAVEL, LITTLE OR NO FINES, WET.		SW SP	N/A	PID=0 ppm α=1 ppm βΓ=50 cpm
80.0 81.5	008930 11/03/88 13:20	3 2 2	6	VERY LOOSE, GREYISH BROWN (10 YR 4/2) WELL GRADED GRAVELLY SAND (FINE SAND TO 1/4" GRAVEL) WET.		SW	N/A	PID=0 ppm α=0 ppm βΓ=50 cpm
85.0 86.5	008931 11/03/88 13:45	2 3 13	2	MEDIUM DENSE, GREYISH BROWN (10 YR 4/2) WELL GRADED GRAVELLY SAND (FINE SAND TO 1/4" GRAVEL)		SW	N/A	PID=0 ppm α=0 ppm βΓ=50 cpm
90.0 91.5	008932 11/03/88 16:17	24 54 50	14	VERY DENSE, DARK BROWN (10 YR 3/2) WELL GRADED COARSE SAND, TRACE GRAVEL, WET.		SW	N/A	PID=0 ppm α=2 ppm βΓ=60 cpm
95.0 96.5	008933 11/03/88 16:45	9 20 23	4	VERY DENSE, DARK BROWN, YELLOWISH (10 YR 4/2) WELL GRADED SANDY GRAVEL (COARSE SAND TO 1/4"), WET.		GW	N/A	PID=0 ppm α=0 ppm βΓ=50 cpm
100.0 101.5	008934 11/03/88 17:10	9 9 10	6	MEDIUM DENSE, BROWN (10 YR 4/2) POORLY GRADED COARSE SAND, SOME 1/4" GRAVEL, SOME FINES, WET.		SP	N/A	PID=0 ppm α=2 ppm βΓ=40 cpm
110.0 111.5	008936 11/06/88 10:30	7 10 16	2	MEDIUM DENSE, GREYISH DARK BROWN (10 YR 4/1) WELL GRADED SAND WITH SOME GRAVEL (MED. SAND TO 1/4") WET.		SW	N/A	PID=0 ppm α=1 ppm βΓ=50 cpm

NOTES:

SAA = Same as Above
PID = Photoionization Detector
N/A = Not Applicable

1270

5174

PROJECT NUMBER: 602 3.2	PROJECT NAME: CRU2 RI PHASE I FIELD INVESTIGATION	
BORING NUMBER: 3385	COORDINATES: NORTH 477883.04 EAST 1379932.66	DATE:05-JUN-90
GROUND ELEVATION: 577.4	GWL: Depth Date/Time	DATE STARTED: 05-JUN-90
ENGINEER/GEOLOGIST: M. SWANSON	Depth Date/Time	DATE COMPLETE: 01-JUL-90
DRILLING METHOD: CABLE-TOOL DRILLING		

DEPTH	SAMPLE	DATE TIME	BLOWS ON	SAMPLE	RECOVERY	INCHES		USCS SYMBOL	TSF	REMARKS
75.0 76.5	032724	06/13/90 13:25	10 21 23		18		DENSE, DARK GRAYISH BROWN (10 YR 4/2), WELL-GRADED COARSE SAND, SOME SUBROUNDED PEBBLES AND COBBLES, TRACE OF SILT, SATURATED	SW	N/A	PID=0.8 ppm α=0 ppm βΓ=80-100 cpm
80.0 81.5	032725	06/13/90 13:57	4 18 24		16		DENSE, DARK GRAY (10 YR 4/1) POORLY GRADED FINE SAND, SOME SUBROUNDED PEBBLES, SATURATED.	SP	N/A	PID=0.8 ppm α=0 ppm βΓ=80-90 cpm
85.0 86.5	032726	06/13/90 15:52	18 19 22		10		DENSE, DARK BROWN (10 YR 4/3), WELL GRADED COARSE SAND, SOME SUBROUNDED PEBBLES, TRACE SILT, SATURATED	SW	N/A	PID=1.0 ppm α=0 ppm βΓ=60-80 cpm
90.0 91.5	032727	06/13/90 17:10	18 20 19		18		DENSE, DARK BROWN (10 YR 4/3) WELL GRADED, COARSENING SAND, SOME SILT AND PEBBLES (.5 IN.), SATURATED	SW	N/A	PID=1.1 ppm α=0 ppm βΓ=60-80 cpm
95.0 96.5	032728	06/14/90 09:37	10 25 33		14		VERY DENSE, GRAYISH BROWN (10 YR 5/2) WELL GRADED, COARSENING SAND, SOME SILT SOME PEBBLES AND GRAVEL (TO .75 IN) SATURATED	SW	N/A	PID=0.6 ppm α=0 ppm βΓ=40-60 cpm
95.0 96.5	032738	06/28/90 08:42	15 23 25		16		DENSE, DARK GRAY (10 YR 4/1); WELL GRADED FINE SILTY SAND; SATURATED	SM	N/A	PID=0.0 ppm α=0 ppm βΓ=40-140 cpm
100.0 101.5	032729	06/14/90 10:37	18 25 36		16		VERY DENSE, DARK GRAYISH BROWN (10 YR 4/2) SILTY, FINE GRAINED SAND, TRACE PEBBLES AND GRAVEL (TO .5 IN) SATURATED	SM	N/A	PID=0.4 ppm α=0 ppm βΓ=80-100 cpm
100.0 101.5	032739	06/28/90 09:24	11 14 9		12		MEDIUM DENSE, DARK GRAYISH BROWN (10 YR 4/2) WELL GRADED GRAVELLY SAND, SOME SILT AND PEBBLES (TO .30 IN); SUBANGULAR; SATURATED	SW	N/A	PID=0.0 ppm α=0 ppm βΓ=20-100 cpm
105.0 106.5	032730	06/14/90 13:34	16 25 28		14		VERY DENSE, BROWN TO GRAYISH BROWN WELL GRADED (10 YR 4/3 - 5/2) SAND SOME SILT, GRAVEL, PEBBLES AND LIMESTONE COBBLES (TO 1 IN) SATURATED	SW	N/A	PID=0.4 ppm α=0 ppm βΓ=40-60 cpm
105.0 106.5	032740	06/28/90 10:49	19 25 31		10		VERY DENSE, YELLOWISH BROWN (10 YR 5/4) WELL GRADED COARSENING SAND, SOME SILT AND PEBBLES AND GRAVEL (TO .75 IN); SATURATED	SW	N/A	PID=0.0 ppm α=0 ppm βΓ=40-100 cpm
110.0 111.5	032731	06/14/90 15:52	20 31 27		13		DENSE, GRAYISH BROWN (10 YR 5/2); POORLY GRADED FINE SAND; SOME SILT, PEBBLES TO .20 IN.; SATURATED. MEDIUM DENSE, DARK GRAYISH BROWN (10 YR 4/2); SANDY SILT; FINE-GRAINED SAND WITH PEBBLES TO .25 IN, SATURATED	SP SM	N/A <.2	PID=0.4 ppm α=0 ppm βΓ=80-100 cpm
115.0 116.5	032732	06/15/90 09:12	7 18 19		8		DENSE, DARK GRAY (10 YR 4/1) WELL GRADED SANDY GRAVEL (COBBLES TO 1.0 IN.) SOME SILT, SATURATED	GW	N/A	PID=0.4 ppm α=0 ppm βΓ=80-90 cpm
120.0 121.5	032733	06/15/90 11:11	7 12 16		6		VERY SOFT, DARK GRAY (2.5 Y.4/0); VERY FINE SANDY SILT; TRACE OF SUBROUNDED PEBBLES AT 120.0 FT; SATURATED	ML	<0.25	PID=0.3 ppm α=0 ppm βΓ=50-60 cpm

NOTES:

SAA = Same as Above
PID = Photoionization Detector
N/A = Not Applicable

1271

PROJECT NUMBER: 602 3.2	PROJECT NAME: CRU2 RI PHASE I FIELD INVESTIGATION	
BORING NUMBER: 3385	COORDINATES: NORTH 477883.04 EAST 1379932.66	DATE:05-JUN-90
GROUND ELEVATION: 577.4	GWL: Depth Date/Time	DATE STARTED: 05-JUN-90
ENGINEER/GEOLOGIST: M. SWANSON	Depth Date/Time	DATE COMPLETE: 01-JUL-90
DRILLING METHOD: CABLE-TOOL DRILLING		

DEPTH	SAMPLE	DATE TIME	BLOWS ON SAMPLE	RECOVERY	INCHES		USCS SYMBOL	TSF	REMARKS
125.0 126.5	032734	06/15/90 14:00	10 12 13	10		SOFT, DARK GRAY (2.5 Y 4/0); SAND: SILT MIXTURE (APPROX 2:3), FINE GRAINED, POORLY SORTED SAND, SATURATED	SM	0.35	PID=0.2 ppm α=0 ppm βΓ=40-60 cpm
130.0 131.5	032735	06/15/90 15:32	10 29 36	12		VERY DENSE, DARK GRAY (10 YR 4/1), SILTY GRAVEL, SOME SAND; LIMESTONE COBBLE FRAGMENTS, SUBROUNDED, SATURATED.	GM	N/A	PID=0.2 ppm α=0 ppm βΓ=40-60 cpm

NOTES:

SAA = Same as Above
PID = Photoionization Detector
N/A = Not Applicable

1272

PROJECT NUMBER: 602 3.2	PROJECT NAME: CRU2 RI PHASE I FIELD INVESTIGATION	
BORING NUMBER: 4014	COORDINATES: NORTH 476786.78 EAST 1379582.56	DATE:26-OCT-88
GROUND ELEVATION: 533.4	GWL: Depth Date/Time	DATE STARTED: 26-OCT-88
ENGINEER/GEOLOGIST: SLUSARSKI/TROLL	Depth Date/Time	DATE COMPLETE: 08-NOV-88
DRILLING METHOD: CABLE-TOOL DRILLING		

DEPTH	SAMPLE DATE TIME	BLOWS ON SAMPLE	RECOVERY INCHES		USCS SYMBOL	TSF	REMARKS
25.0 26.5	010385 11/01/88 09:52	15 21 25	12	DENSE, DK YELLOW-BROWN (10 YR 4/2) WELL GRADED GRAVELLY SAND, SOME SILT, WET SOME GRAVEL (.25 - .50 IN)	SW	N/A	PID=0 ppm α=0-5 ppm βΓ=40-60 cpm
30.0 31.5	010386 11/01/88 11:08	10 10 9	10	MEDIUM DENSE DK OLIVE-BROWN (10 YR 4/2) WELL GRADED GRAVEL SAND MIXTURE (GRAVEL .25 - 1.0 IN) WET. MEDIUM DENSE DK OLIVE-BROWN (10 YR 4/2) POORLY GRADED GRAVELLY SAND, WET.	GW SP	N/A N/A	PID=0 ppm α=0-5 ppm βΓ=40-60 cpm
35.0 36.5	010387 11/01/88 14:05	15 17 18	14	DENSE Y-B (10 YR 5/3) WELL GRADED GRAVEL SAND MIXTURE (GRAVEL .25 - 1.0 IN) WET.	GW	N/A	PID=0 ppm α=0-5 ppm βΓ=40-60 cpm
40.0 41.5	010388 11/01/88 14:55	20 16 17	8	MEDIUM DENSE Y-B (10 YR 5/3) WELL GRADED GRAVEL SAND MIXTURE (GRAVEL .25 - .50) WET	GW	N/A	PID=0 ppm α=0-5 ppm βΓ=40-60 cpm
45.0 46.5	010389 11/01/88 16:15	28 30 28	12	V. DENSE Y-B (10 YR 5/3) WELL GRADED GRAVEL SAND MIXTURE (TR COARSE GRAVEL .5 - 1.0 IN) WET	GW	N/A	PID=0 ppm α=0-5 ppm βΓ=40-60 cpm
50.0 51.5	010390 11/02/88 09:30	15 8 8	10	MEDIUM DENSE, Y-B (10 YR 4/2) WELL GRADED GRAVELLY SAND, WET	SW	N/A	PID=0 ppm α=0-5 ppm βΓ=30 cpm
55.0 56.5	010391 11/02/88 10:20	15 19 24	15	DENSE, Y-B (10 YR 4/2) POORLY GRADED SAND, SOME FINE GRAVEL, WET	SP	N/A	PID=0 ppm α=0-5 ppm βΓ=30 cpm
60.0 61.5	010392 11/02/88 11:00	3 5 7	10	MEDIUM DENSE, Y-B (10 YR 4/2) WELL GRADED SAND (SOME 1/4" GRAVEL), WET.	SW	N/A	PID=0 ppm α=0-5 ppm βΓ=30 cpm
65.0 66.5	010393 11/02/88 13:55	13 24 25	15	DENSE, YELLOW BROWN (10 YR 4/4) POORLY GRADED SAND, SOME GRAVEL 3/8" - 1/4" , WET.	SP	N/A	PID=0 ppm α=0-5 ppm βΓ=20 cpm
75.0 76.5	010395 11/03/88 09:00	17 19 15	10	DENSE, YELLOW BROWN, (10 YR 4/3) WELL GRADED SAND, LITTLE FINES, WET.	SW	N/A	PID=0 ppm α=0-5 ppm βΓ=30 cpm
80.0 81.5	010396 11/03/88 09:30	6 7 14	6	MEDIUM DENSE, YELLOWISH BROWN, (10 YR 4/3) POORLY GRADED SAND, VERY LITTLE FINES, WET.	SP	N/A	PID=0 ppm α=0-5 ppm βΓ=20 cpm
85.0 86.5	010397 11/03/88 11:00	9 15 20	9	DENSE, DARK BROWN (10 YR 3/3) POORLY GRADED SAND, VERY LITTLE FINES, WET.	SP	N/A	PID=0 ppm α=0 ppm βΓ=30 cpm
90.0 91.5	010398 11/03/88 12:00	8 12 13	18	MEDIUM DENSE, YELLOWISH BROWN, (10 YR 4/3), WELL GRADED SAND, SOME GRAVEL (.25 - .50 IN.), WET.	SW	N/A	PID=0 ppm α=0-5 ppm βΓ=20 cpm

NOTES:

SAA = Same as Above
PID = Photoionization Detector
N/A = Not Applicable

5174

PROJECT NUMBER: 602 3.2	PROJECT NAME: CRU2 RI PHASE I FIELD INVESTIGATION	
BORING NUMBER: 4014	COORDINATES: NORTH 476786.78 EAST 1379582.56	DATE:26-OCT-88
GROUND ELEVATION: 533.4	GWL: Depth Date/Time	DATE STARTED: 26-OCT-88
ENGINEER/GEOLOGIST: SLUSARSKI/TROLL	Depth Date/Time	DATE COMPLETE: 08-NOV-88
DRILLING METHOD: CABLE-TOOL DRILLING		

DEPTH	SAMPLE	DATE TIME	BLOWS ON SAMPLE	RECOVERY INCHES		USCS SYMBOL	TSF	REMARKS
100.0 101.5	010400 11/06/88 09:50	50 39 50	10	VERY DENSE, LIGHT BROWNISH GRAY, (10 YR 6/2) WELL GRADED GRAVEL, FINE GRAVEL RANGE, WET.		GW	N/A	PID=0 ppm α=0-5 ppm βΓ=10-20 cpm
110.0 111.5	010402 11/07/88 08:45	16 14 12	6	MEDIUM DENSE, YELLOWISH BROWN, (10 YR 5/3), POORLY GRADED SAND, TRACE OF FINE GRAVEL, WET.		SP	N/A	PID=0 ppm α=0 ppm βΓ=10-20 cpm
115.0 116.5	010403 11/07/88 10:02	15 30 30	10	VERY DENSE, BROWN, (10 YR 4/2), POORLY GRADED SAND, PREDOMINANTLY MEDIUM TO FINE GRAINED, WET		SP	N/A	PID=0 ppm α=0-5 ppm βΓ=20 cpm
120.0 121.5	010404 11/07/88 11:10	6 7 8	8	MEDIUM DENSE, YELLOWISH BROWN, (10 YR 4/3), POORLY GRADED SAND, WET.		SP	N/A	PID=0 ppm α=0 ppm βΓ=10-20 cpm
135.0 136.5	010407 11/08/88 08:50	11 25 29	8	VERY DENSE, BROWN, (10 YR 4/3), WELL GRADED SAND, SOME FINE GRAVEL (.25"), WET.		SW	N/A	PID=0 ppm α=0-5 ppm βΓ=20 cpm
140.0 141.5	010408 11/08/88 10:00	8 13 13	6	MEDIUM DENSE, BROWN (10 YR 3/3), POORLY GRADED SAND, VERY LITTLE GRAVEL (.25"), WET.		SP	N/A	PID=0 ppm α=0-5 ppm βΓ=20 cpm

NOTES:

SAA = Same as Above
PID = Photoionization Detector
N/A = Not Applicable

1274

TABLE F-18B

SOUTH FIELD TRENCHING LOG 1

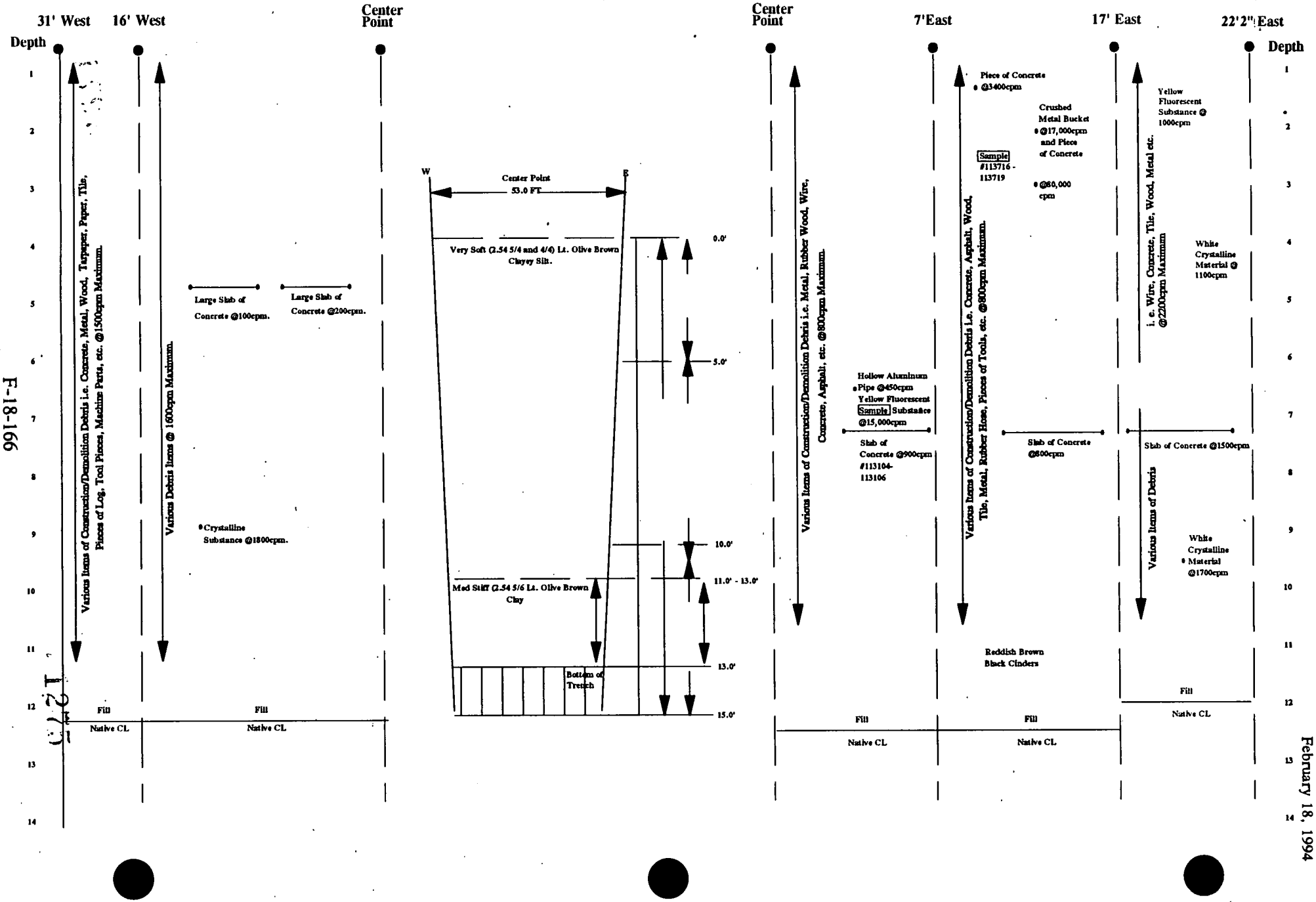

F-18-166

5174

FEMP-OU02-4 DRAFT
February 18, 1994

TABLE F-18B
(Continued)
SOUTH FIELD TRENCHING LOG 2

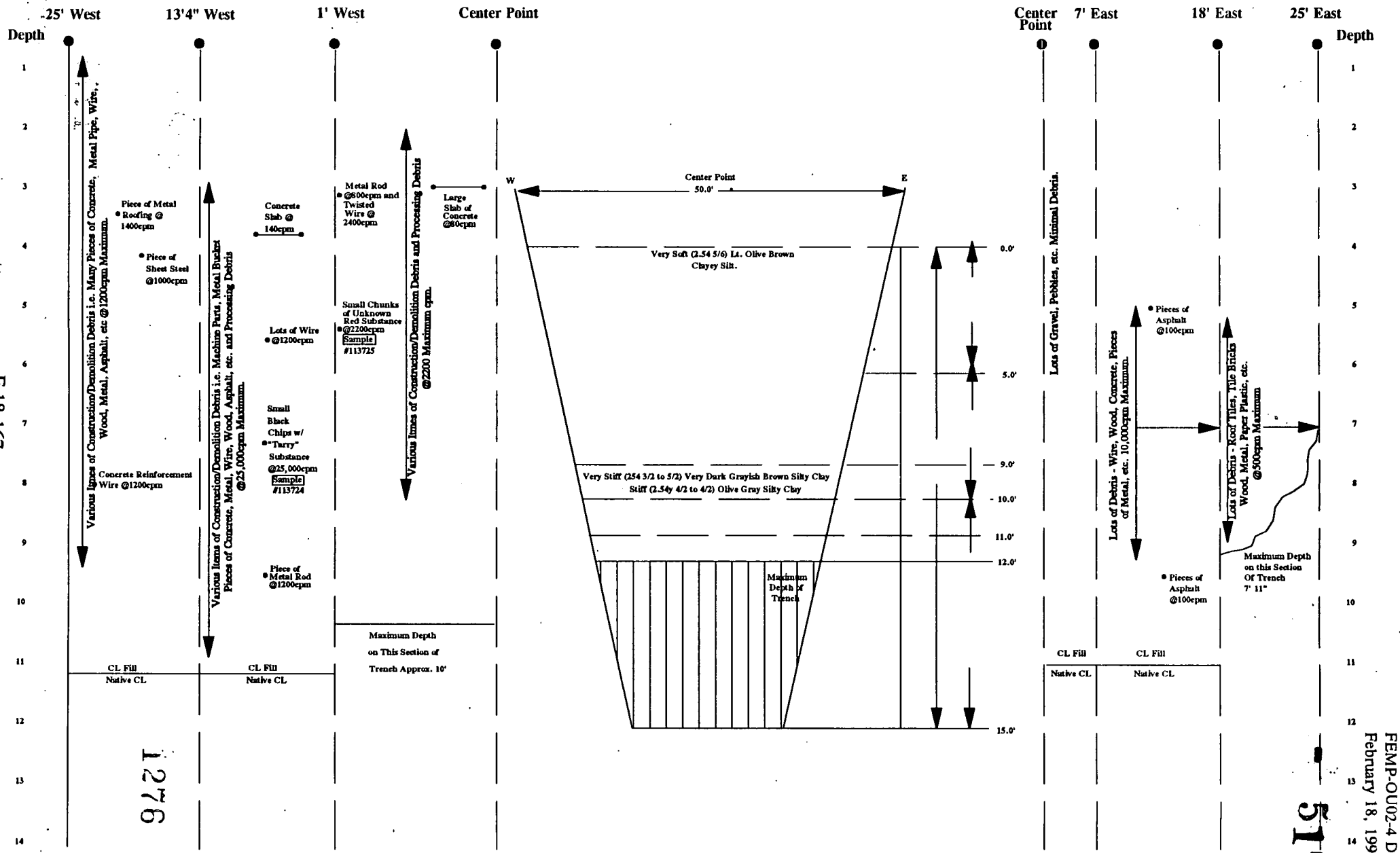

F-18-167

1276

5174

FEMP-OU02-4 DRAFT
February 18, 1994

TABLE F-18B
(Continued)
SOUTH FIELD TRENCHING LOG 3

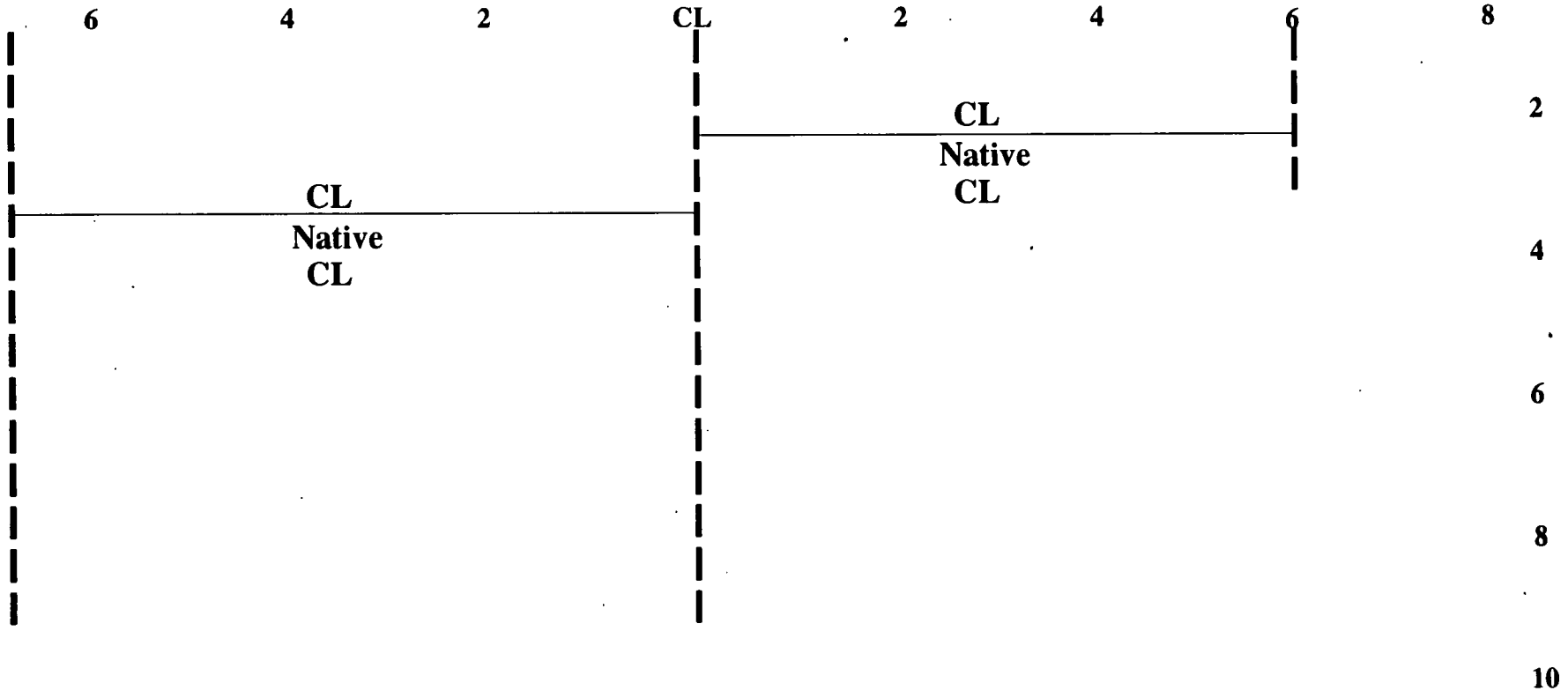

Horizontal Sample Interval Boundary

Max Beta-Gamma: 400cpm
Max M. T.: 0ppm

1277

5174

TABLE F-18B
(Continued)
SOUTH FIELD TRENCHING LOG 4

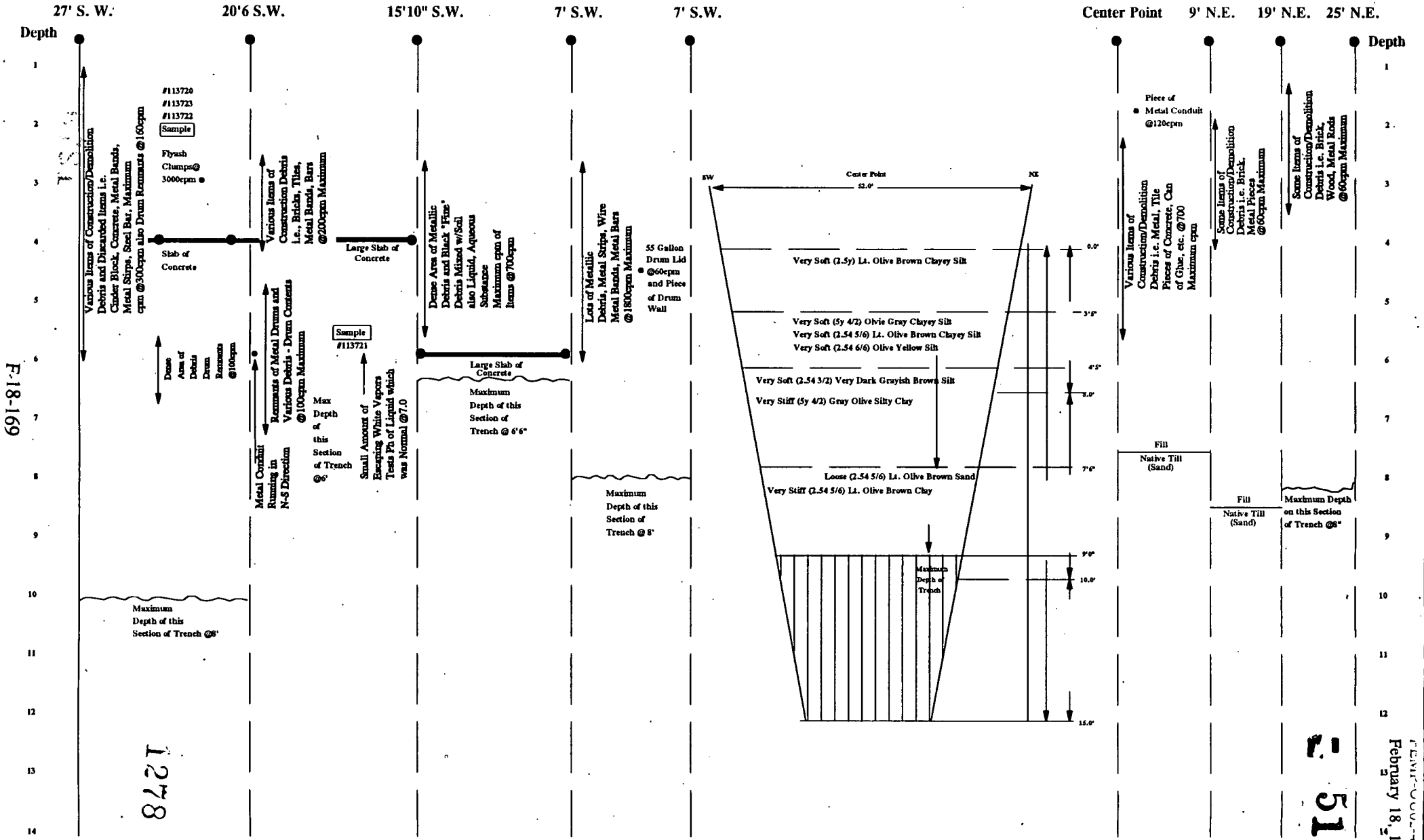

F-18-169

1278

5174

February 18, 1994

TABLE F-18B
(Continued)
SOUTH FIELD TRENCHING LOG 5

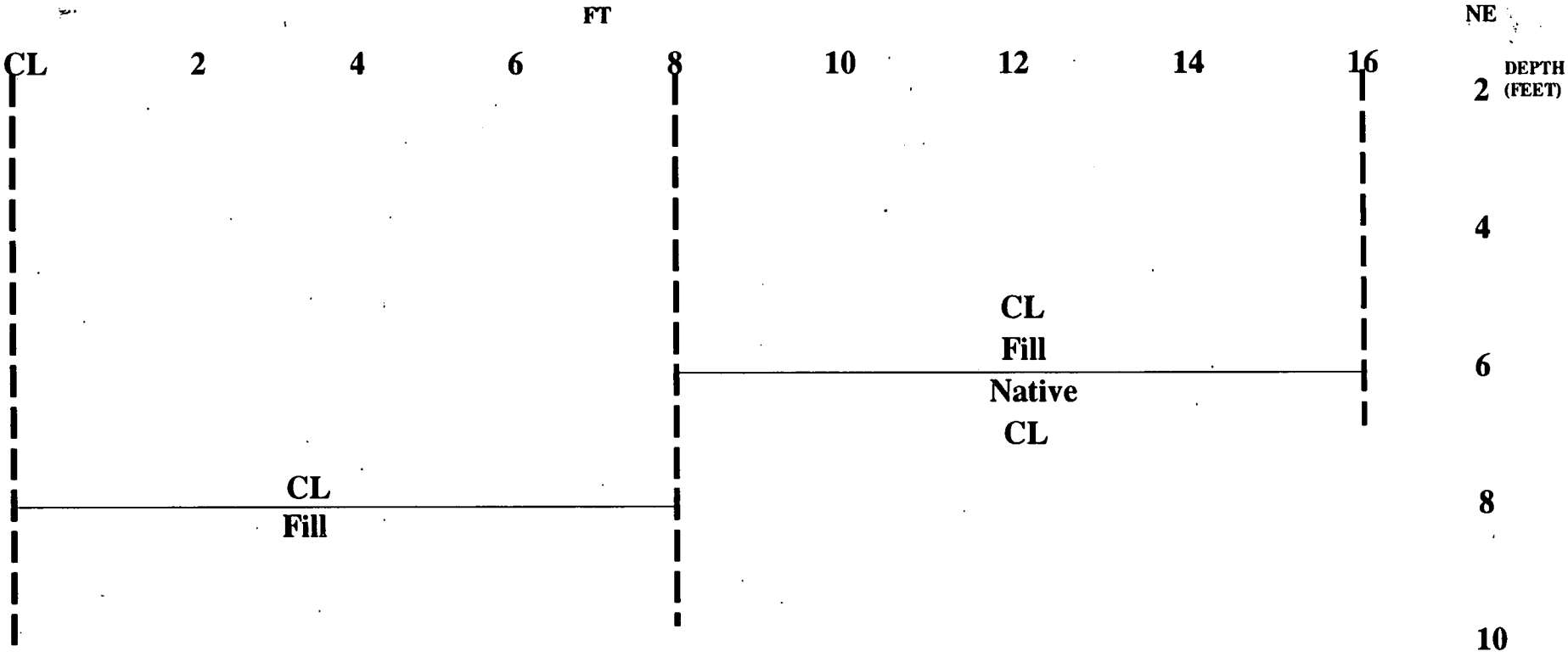

Horizontal Sample Interval Boundary

Max Beta-Gamma: 220cpm
Max M. T.: 0.7ppm

5174
1279

TABLE F-18B
(Continued)
SOUTH FIELD TRENCHING LOG 6

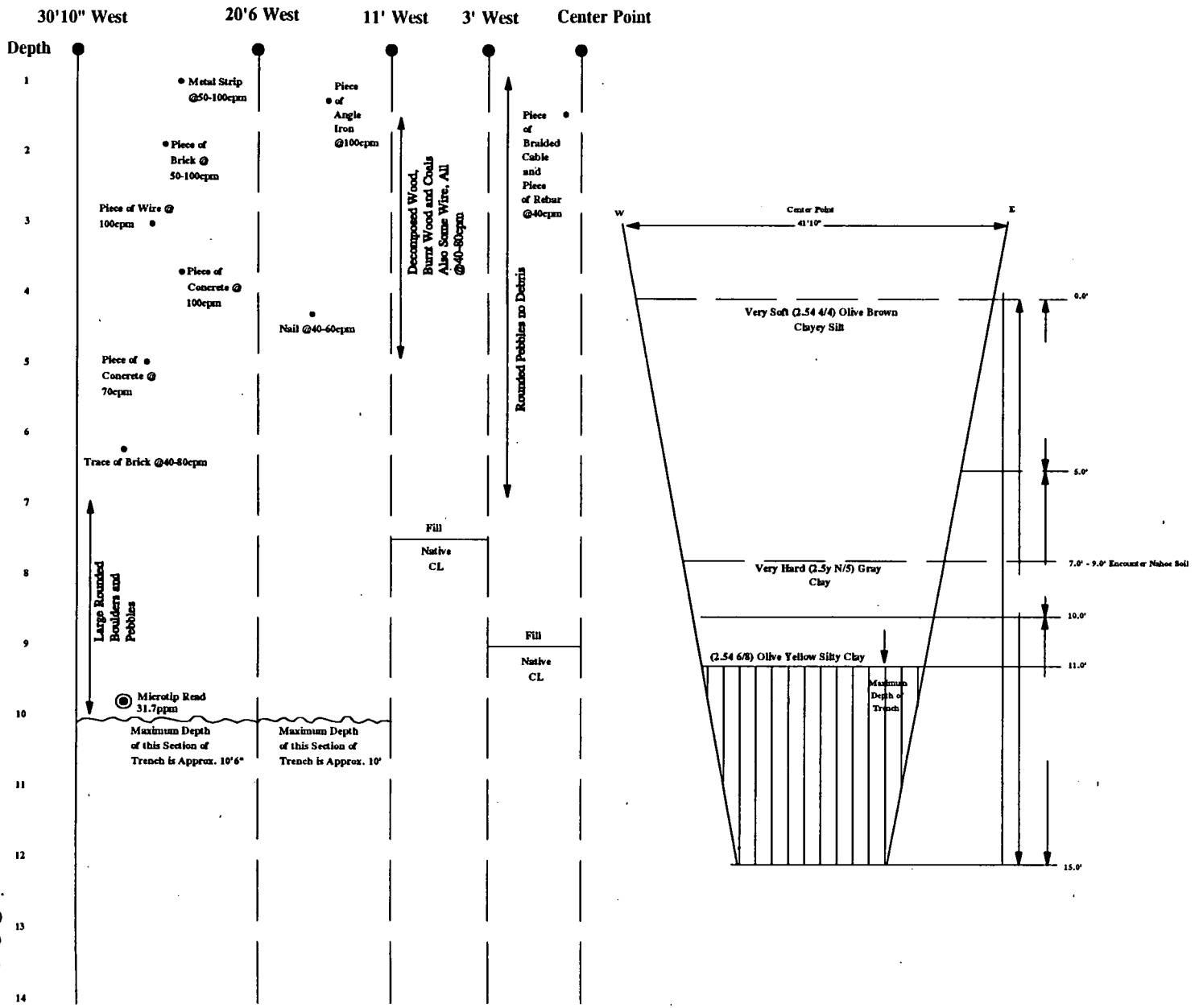

F-18-171

1280

5174

FEMP-OU02-4 DRAFT
February 18, 1994

TABLE F-18B
(Continued)

SOUTH FIELD TRENCHING LOG 7

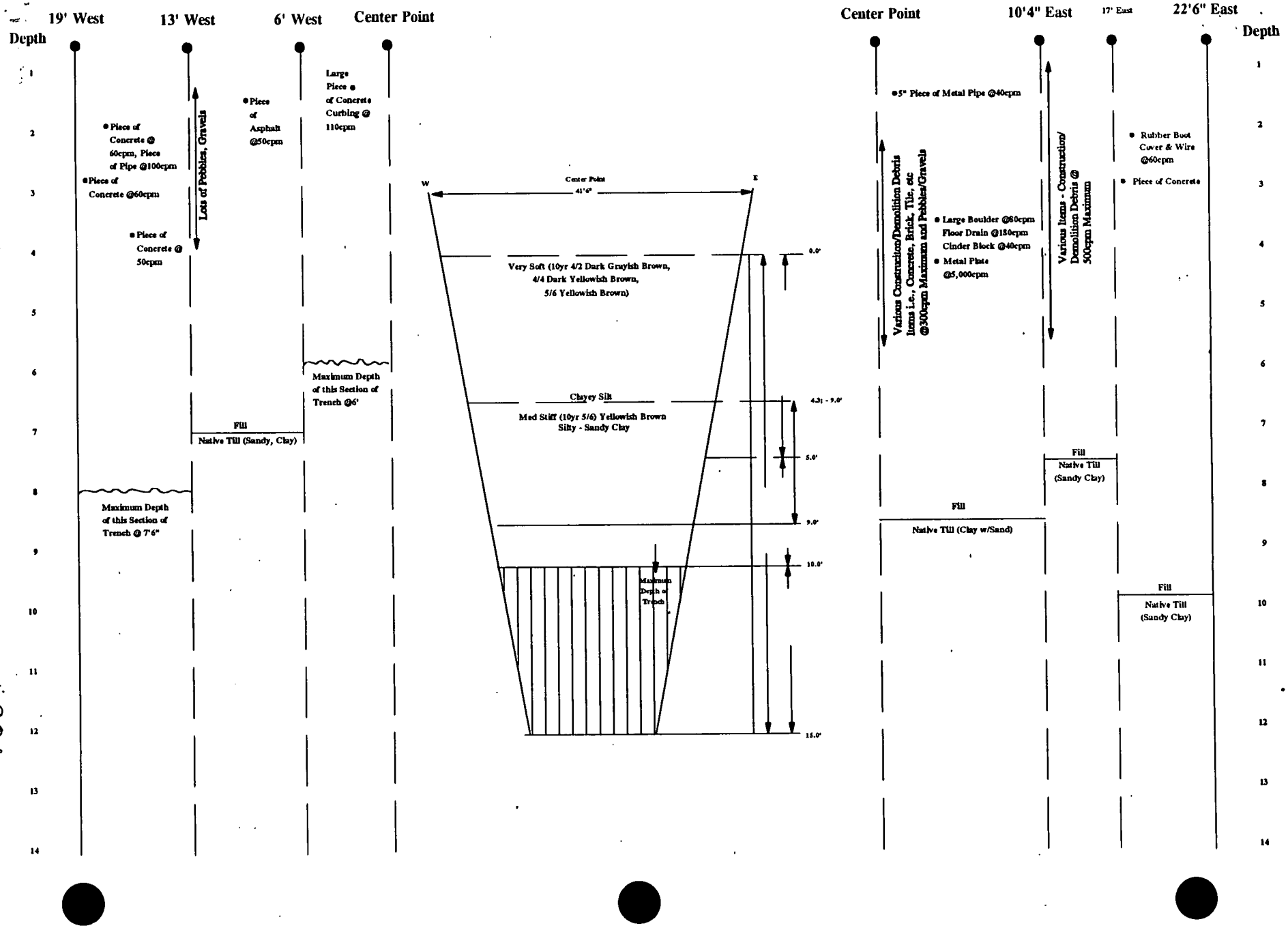

TABLE F-18B
(Continued)
SOUTH FIELD TRENCHING LOG 8

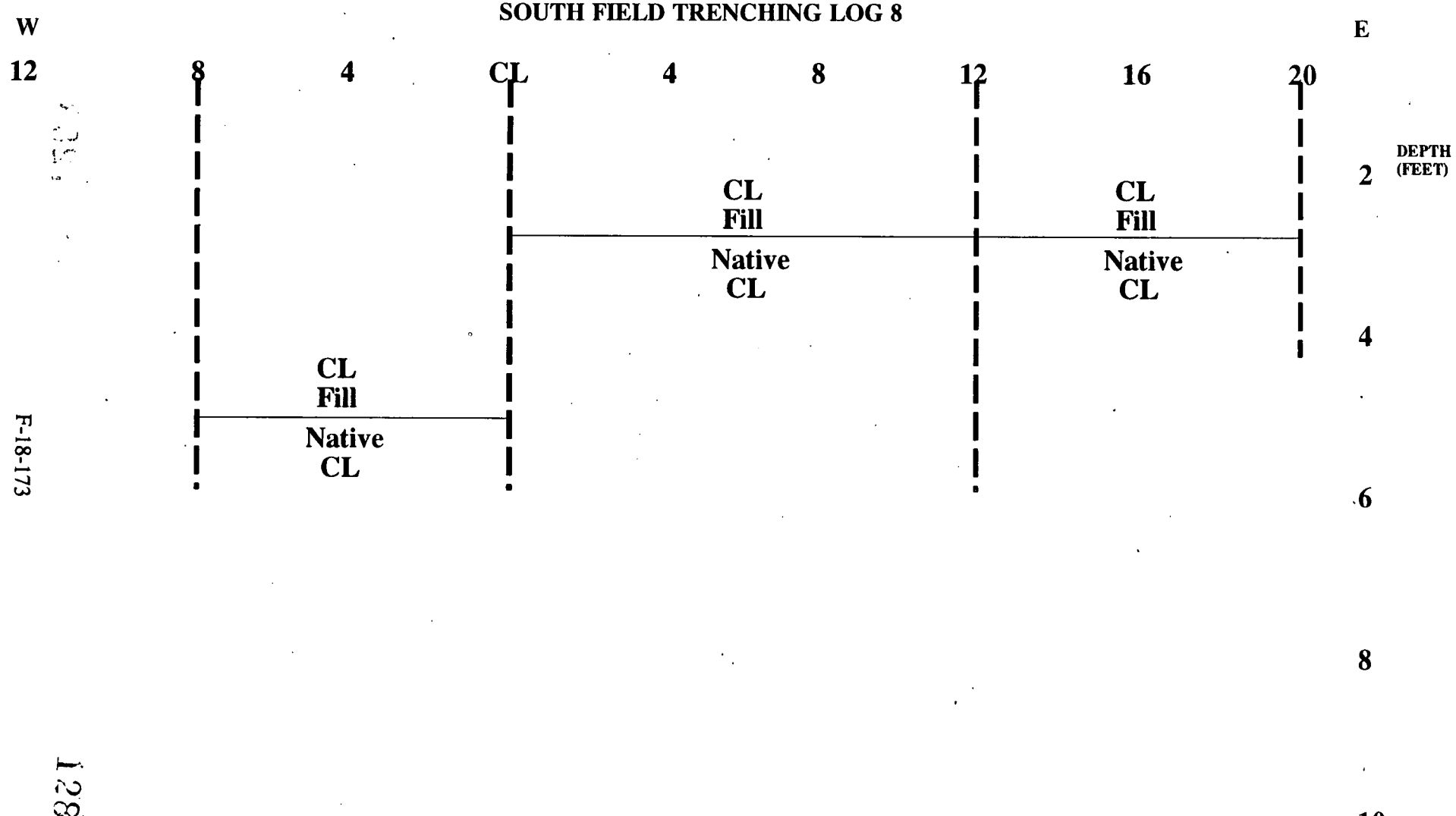

F-18-173

1282

Horizontal Sample Interval Boundary

Max Beta-Gamma: 600cpm

Max M. T.: 4.8ppm

TABLE F-18B
(Continued)
SOUTH FIELD TRENCHING LOG 9

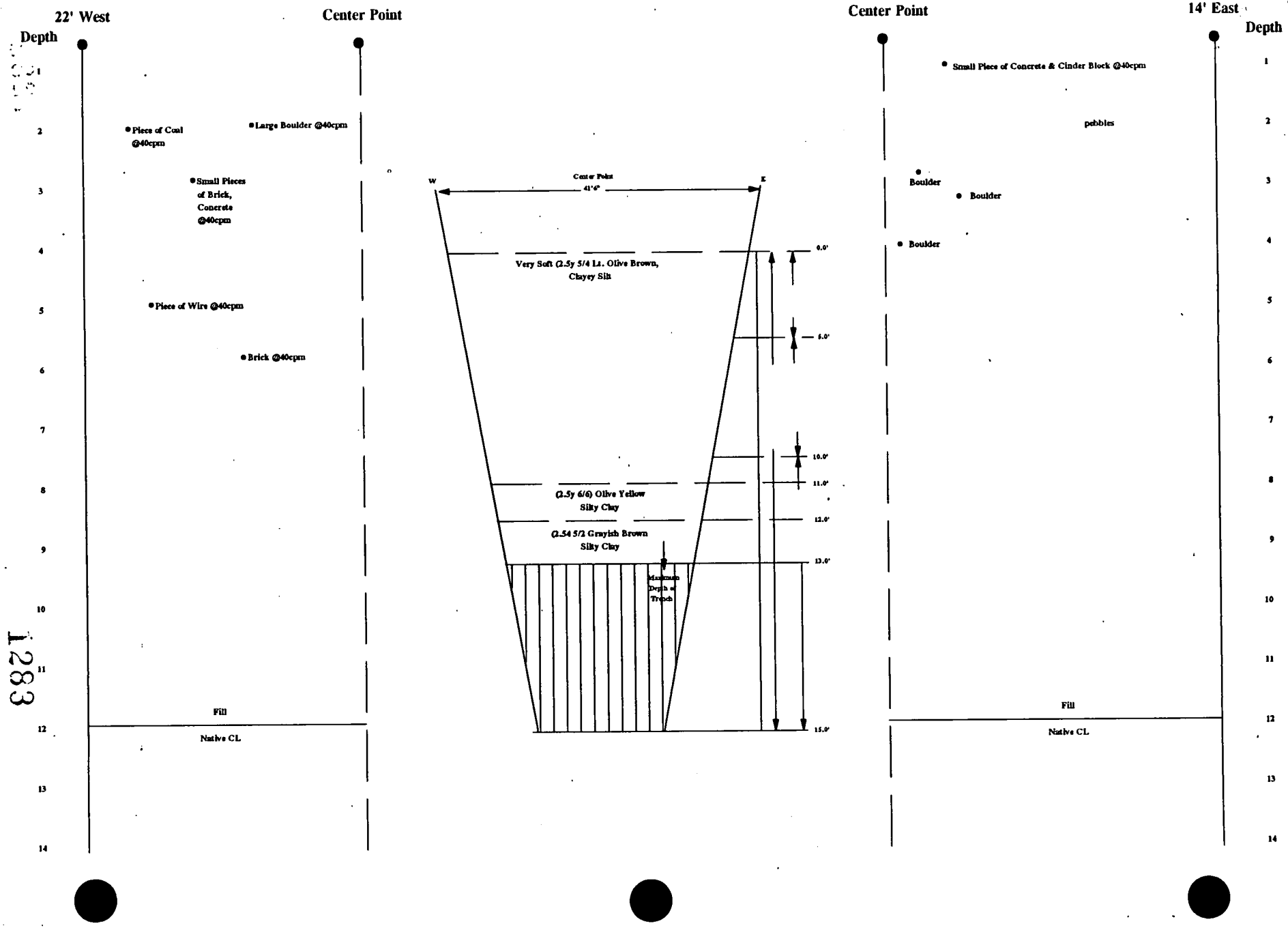

TABLE F-18B
(Continued)

SOUTH FIELD TRENCHING LOG 10

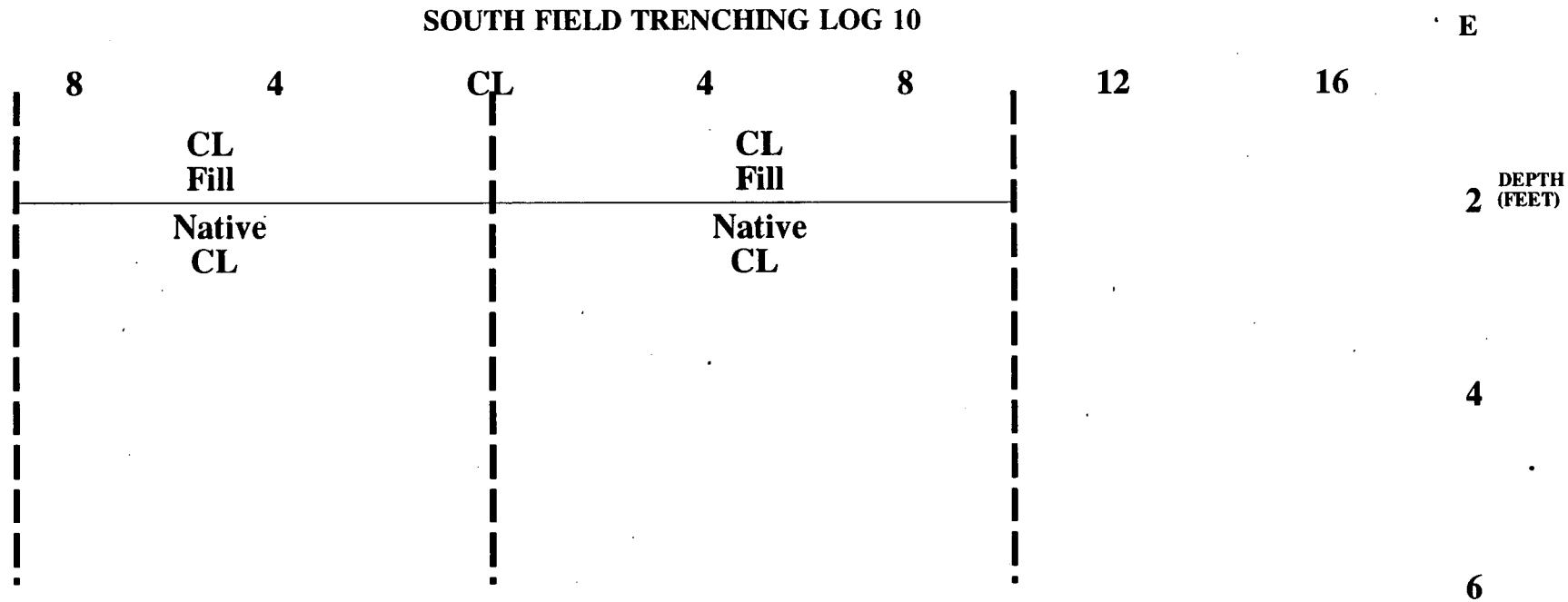

Horizontal Sample Interval Boundary

Max Beta-Gamma: 4,600cpm

Max M. T.: 0ppm

F-18-175

1284

5174

TABLE F-19

MONITORING WELL INSTALLATION RECORD

PROJECT NAME: Fernald Environmental Management Project	**PROJECT LOCATION:** Fernald
BORING ID NO: 1014	**COUNTY:** Hamilton
PROJECT ID: NA	**STATE:** Ohio
DATE INSTALLED: October 18, 1993	**CONTRACTOR:** NA
FIELD ENG./GEOL.: D. Oakley	**DRILLED BY:** NA
TYPE OF SEAL: Bentonite	**DRILLING METHOD:** Cable-Tool Drilling
DEVELOPEMENT METHOD: NA	**TYPE OF BIT:** Flat Head Hammer
SURVEY DATUM	**SAND PACK TYPE:** NA
	WATER LEVEL/DATE: NA

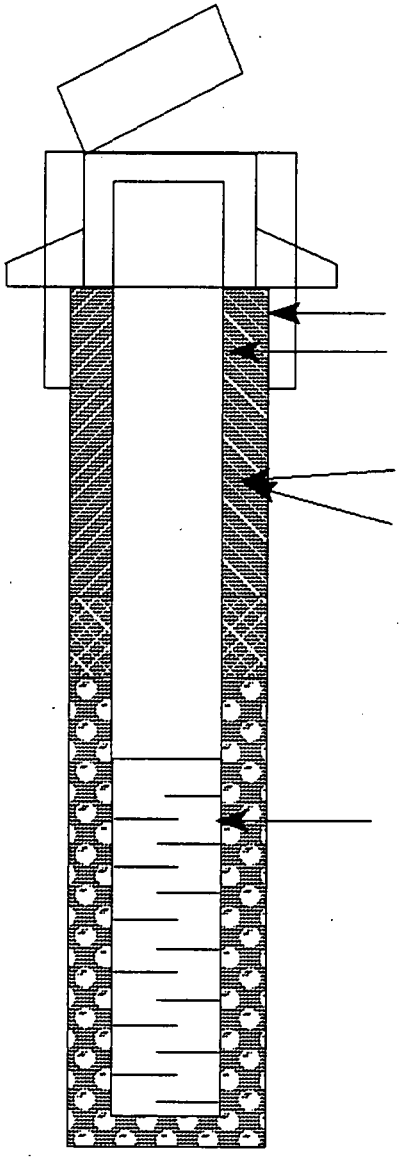

536.47 ft, Top of Casing (Protective pipe)
535.87 ft, Top of Well
534.5 ft, Concrete Elevation
534.0 ft, Ground Elevation
10 3/8 in, Boring Diameter
4 in, Casing Diameter
-2.5 Bottom Protective Pipe
S. S. Casing Material
Grout
Other Bentonite
0 ft, Top of Bentonite
2 ft, Bottom of Bentonite
3.5 ft, Top of Screen
Well Screen
4 in, Diameter
.01 in, Slot
5 Length (ft)
S. S. Material
8.5 ft, Bottom of Screen
22.5 ft, Bottom of Boring

Note: Elevations in feet above mean sea level.

TABLE F-19

MONITORING WELL INSTALLATION RECORD

PROJECT NAME: Fernald Environmental Management Project	**PROJECT LOCATION:** Fernald
BORING ID NO: 1045	**COUNTY:** Hamilton
PROJECT ID: NA	**STATE:** Ohio
DATE INSTALLED: October 9, 1987	**CONTRACTOR:** NA
FIELD ENG./GEOL.: D. Oakley	**DRILLED BY:** NA
TYPE OF SEAL: Bentonite	**DRILLING METHOD:** Cable-Tool Drilling
DEVELOPEMENT METHOD: NA	**TYPE OF BIT:** Flat Head Hammer
SURVEY DATUM	**SAND PACK TYPE:** NA
	WATER LEVEL/DATE: NA

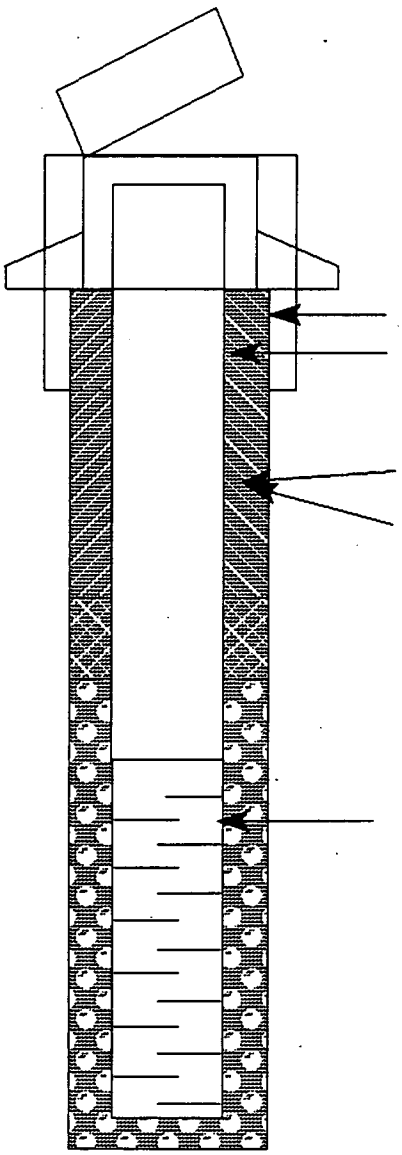

548.15 ft, Top of Casing (Protective pipe)
547.59 ft, Top of Well
546.2 ft, Concrete Elevation
545.7 ft, Ground Elevation
10 3/8 in, Boring Diameter
4 in, Casing Diameter
-2.5 Bottom Protective Pipe
S. S. Casing Material

□ Grout

■ Other Bentonite

0 ft, Top of Bentonite

1.5 ft, Bottom of Bentonite

2.5 ft, Top of Screen

Well Screen

4 ID in, Diameter

.01 in, Slot

5.4 Length (ft)
S. S. Material

7.9 ft, Bottom of Screen
18 ft, Bottom of Boring

Note: Elevations in feet above mean sea level.

TABLE F-19

MONITORING WELL INSTALLATION RECORD

PROJECT NAME: Fernald Environmental Management Project	**PROJECT LOCATION:** Fernald
BORING ID NO: 1046	**COUNTY:** Hamilton
PROJECT ID: NA	**STATE:** Ohio
DATE INSTALLED: February 9, 1988	**CONTRACTOR:** NA
FIELD ENG./GEOL.: T. Sullivan	**DRILLED BY:** NA
TYPE OF SEAL: Bentonite	**DRILLING METHOD:** Cable-Tool Drilling
DEVELOPEMENT METHOD: NA	**TYPE OF BIT:** Flat Head Hammer
SURVEY DATUM	**SAND PACK TYPE:** NA
	WATER LEVEL/DATE: NA

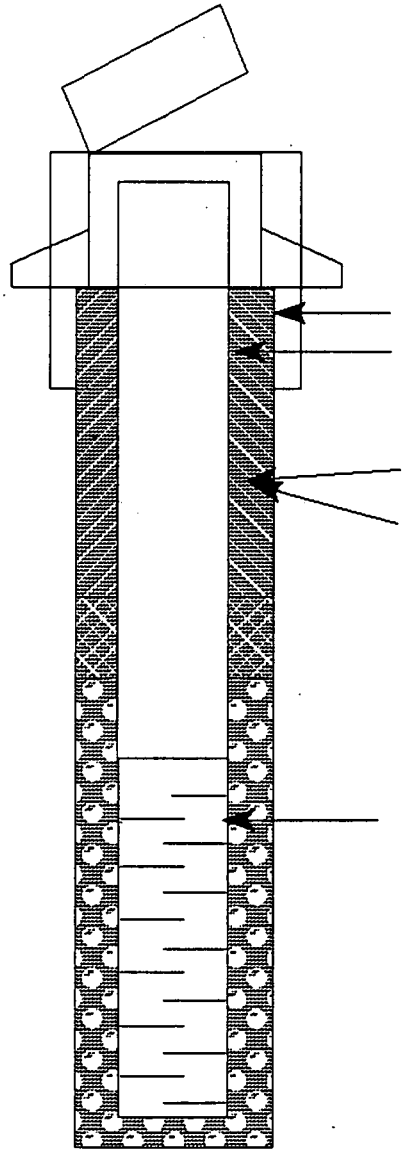

579.45 ft, Top of Casing (Protective pipe)
579.13 ft, Top of Well
NA ft, Concrete Elevation
576.5 ft, Ground Elevation
10 3/8 in, Boring Diameter
4 in, Casing Diameter
2.25 Bottom Protective Pipe
S. S. Casing Material
Grout
Other Bentontie
0 ft, Top of Bentonite
7 ft, Bottom of Bentonite
9.5 ft, Top of Screen
Well Screen
4 ID in, Diameter
.01 in, Slot
10 Length (ft)
S. S. Material
19.5 ft, Bottom of Screen
28.5 ft, Bottom of Boring

Note: Elevations in feet above mean sea level.

TABLE F-19

MONITORING WELL INSTALLATION RECORD

PROJECT NAME: Fernald Environmental Management Project	**PROJECT LOCATION:** Fernald
BORING ID NO: 1048	**COUNTY:** Hamilton
PROJECT ID: NA	**STATE:** Ohio
DATE INSTALLED: October 14, 1987	**CONTRACTOR:** NA
FIELD ENG./GEOL.: W. Kegley	**DRILLED BY:** NA
TYPE OF SEAL: Bentonite	**DRILLING METHOD:** Cable-Tool Drilling
DEVELOPEMENT METHOD: NA	**TYPE OF BIT:** Flat Head Hammer
SURVEY DATUM	**SAND PACK TYPE:** NA
	WATER LEVEL/DATE: NA

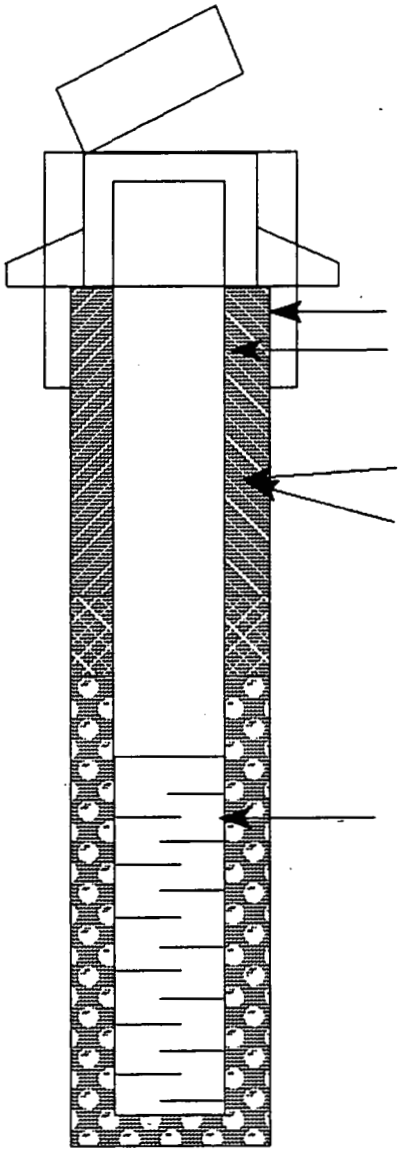

573.64 ft, Top of Casing (Protective pipe)
573.17 ft, Top of Well
571.8 ft, Concrete Elevation
571.3 ft, Ground Elevation
10 3/8 in, Boring Diameter
4 in, Casing Diameter
-2.5 Bottom Protective Pipe
S. S. Casing Material

Grout

Other Bentontie

0 ft, Top of Bentonite

3.5 ft, Bottom of Bentonite

5.5 ft, Top of Screen

Well Screen

4 ID in, Diameter

.01 in, Slot

10 Length (ft)
S. S. Material

15.5 ft, Bottom of Screen
19.5 ft, Bottom of Boring

Note: Elevations in feet above mean sea level.

1288

5174

TABLE F-19

MONITORING WELL INSTALLATION RECORD

PROJECT NAME: Fernald Environmental Management Project	**PROJECT LOCATION:** Fernald
BORING ID NO: 1065	**COUNTY:** Hamilton
PROJECT ID: NA	**STATE:** Ohio
DATE INSTALLED: October 6, 1987	**CONTRACTOR:** NA
FIELD ENG./GEOL.: D. Oakley	**DRILLED BY:** NA
TYPE OF SEAL: Bentonite	**DRILLING METHOD:** Cable-Tool Drilling
DEVELOPEMENT METHOD: NA	**TYPE OF BIT:** Flat Head Hammer
SURVEY DATUM	**SAND PACK TYPE:** NA
	WATER LEVEL/DATE: NA

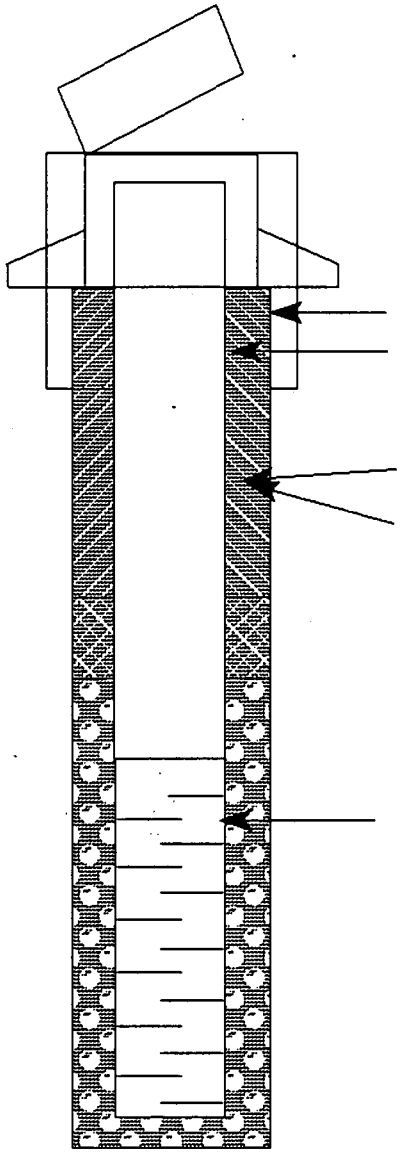

573.26 ft, Top of Casing (Protective pipe)
572.96 ft, Top of Well
571.4 ft, Concrete Elevation
570.9 ft, Ground Elevation
10 3/8 in, Boring Diameter
4 in, Casing Diameter
2.5 Bottom Protective Pipe
S. S. Casing Material
□ Grout
■ Other Bentonite
0 ft, Top of Bentonite
1.5 ft, Bottom of Bentonite
3 ft, Top of Screen

Well Screen

4 ID in, Diameter
.01 in, Slot
10.6 Length (ft)
S. S. Material

13.6 ft, Bottom of Screen
14 ft, Bottom of Boring

Note: Elevations in feet above mean sea level.

1289

TABLE F-19

MONITORING WELL INSTALLATION RECORD

PROJECT NAME: Fernald Environmental Management Project	**PROJECT LOCATION:** Fernald
BORING ID NO: 1516	**COUNTY:** Hamilton
PROJECT ID: NA	**STATE:** Ohio
DATE INSTALLED: May 19, 1990	**CONTRACTOR:** NA
FIELD ENG./GEOL.: M. Garman	**DRILLED BY:** NA
TYPE OF SEAL: Bentonite	**DRILLING METHOD:** Auger
DEVELOPEMENT METHOD: NA	**TYPE OF BIT:** Auger
SURVEY DATUM	**SAND PACK TYPE:** NA
	WATER LEVEL/DATE: NA

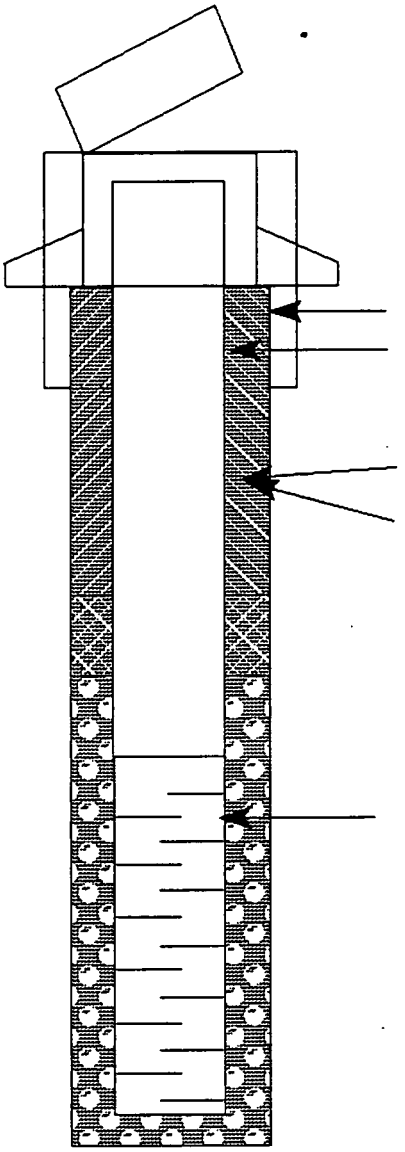

541.2 ft, Top of Casing (Protective pipe)
540.95 ft, Top of Well
539.31 ft, Concrete Elevation
538.81 ft, Ground Elevation
8 in, Boring Diameter
2 in, Casing Diameter
2.5 Bottom Protective Pipe
40 PVC Casing Material
Grout
Other Bentonite
1 ft, Top of Bentonite
7.5 ft, Bottom of Bentonite
9.5 ft, Top of Screen
Well Screen
2 ID in, Diameter
.02 in, Slot
10 Length (ft)
40 PVC Material
19.5 ft, Bottom of Screen
20 ft, Bottom of Boring

Note: Elevations in feet above mean sea level.

5174

TABLE F-19

MONITORING WELL INSTALLATION RECORD

PROJECT NAME: Fernald Environmental Management Project	**PROJECT LOCATION:** Fernald
BORING ID NO: 1517	**COUNTY:** Hamilton
PROJECT ID: NA	**STATE:** Ohio
DATE INSTALLED: May 21, 1990	**CONTRACTOR:** NA
FIELD ENG./GEOL.: M. Garman	**DRILLED BY:** NA
TYPE OF SEAL: Bentonite	**DRILLING METHOD:** Auger
DEVELOPEMENT METHOD: NA	**TYPE OF BIT:** Auger
SURVEY DATUM	**SAND PACK TYPE:** NA
	WATER LEVEL/DATE: NA

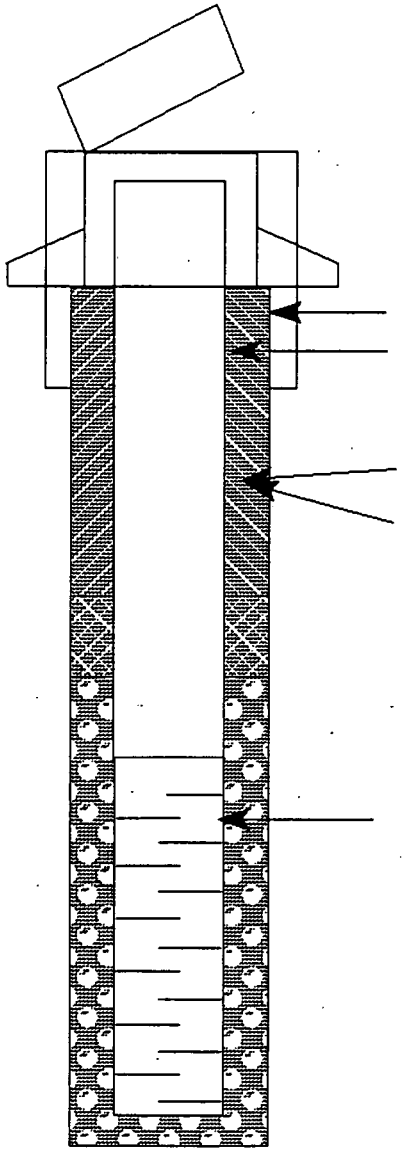

540.33 ft, Top of Casing (Protective pipe)
540.06 ft, Top of Well
538.56 ft, Concrete Elevation
538.06 ft, Ground Elevation
8 in, Boring Diameter
2 in, Casing Diameter
2.5 Bottom Protective Pipe
40 PVC Casing Material
Grout
Other Bentonite
1 ft, Top of Bentonite
6.5 ft, Bottom of Bentonite
10 ft, Top of Screen
Well Screen
2 ID in, Diameter
.02 in, Slot
10 Length (ft)
40 PVC Material
20 ft, Bottom of Screen
20 ft, Bottom of Boring

Note: Elevations in feet above mean sea level.

1291

TABLE F-19

MONITORING WELL INSTALLATION RECORD

PROJECT NAME: Fernald Environmental Management Project	**PROJECT LOCATION:** Fernald
BORING ID NO: 1518	**COUNTY:** Hamilton
PROJECT ID: NA	**STATE:** Ohio
DATE INSTALLED: May 22, 1990	**CONTRACTOR:** NA
FIELD ENG./GEOL.: M. Garman	**DRILLED BY:** NA
TYPE OF SEAL: Bentonite	**DRILLING METHOD:** Auger
DEVELOPEMENT METHOD: NA	**TYPE OF BIT:** Auger
SURVEY DATUM	**SAND PACK TYPE:** NA
	WATER LEVEL/DATE: NA

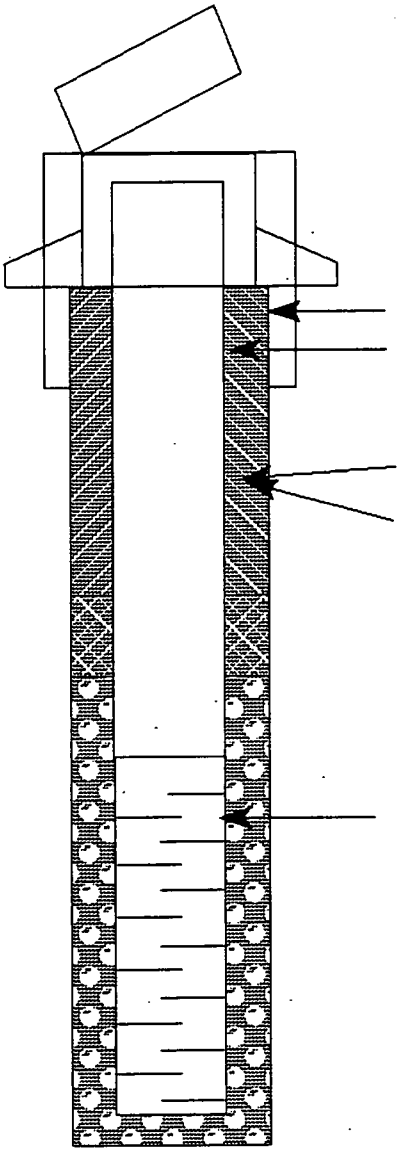

539.08 ft, Top of Casing (Protective pipe)
538.77 ft, Top of Well
537.26 ft, Concrete Elevation
536.76 ft, Ground Elevation
8 in, Boring Diameter
2 in, Casing Diameter
2.5 Bottom Protective Pipe
40 PVC Casing Material
□ Grout
■ Other Bentonite
1 ft, Top of Bentonite
7.5 ft, Bottom of Bentonite
10 ft, Top of Screen
Well Screen
2 ID in, Diameter
.02 in, Slot
10 Length (ft)
40 PVC Material
20 ft, Bottom of Screen
20 ft, Bottom of Boring

Note: Elevations in feet above mean sea level.

1292

5174

TABLE F-19

MONITORING WELL INSTALLATION RECORD

PROJECT NAME: Fernald Environmental Management Project	**PROJECT LOCATION:** Fernald
BORING ID NO: 1941	**COUNTY:** Hamilton
PROJECT ID: 20.03.05	**STATE:** Ohio
DATE INSTALLED: 4-26-93	**CONTRACTOR:** Pennsylvania Drilling Co.
FIELD ENG./GEOL.: Debes, Boyer	**DRILLED BY:** Joe Raab, Roger Davis
TYPE OF SEAL: Grout/Slurry	**DRILLING METHOD:** Hollow Stem Auger
DEVELOPEMENT METHOD: Surge-Bail	**TYPE OF BIT:** Auger
SURVEY DATUM	**SAND PACK TYPE:** 10/20 Silica
	WATER LEVEL/DATE: 574.6/5-7-93

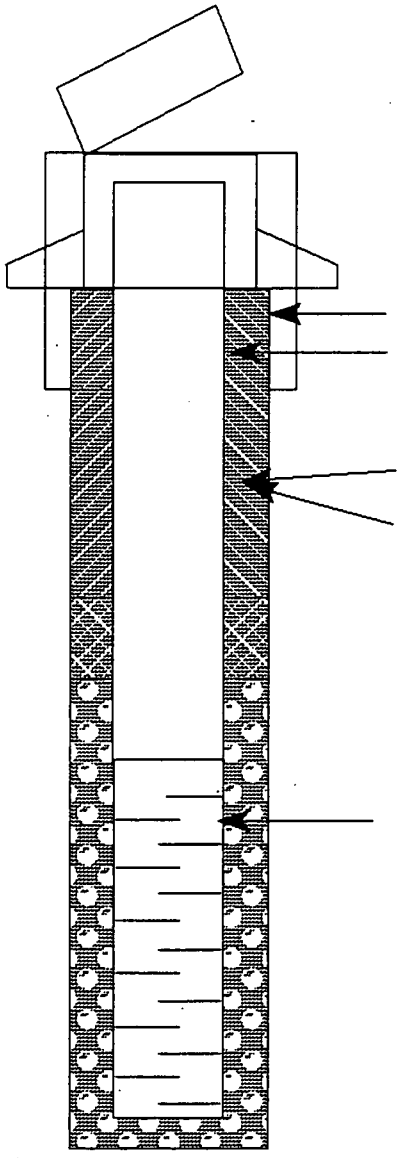

581.37 ft, Top of Casing (Protective pipe)
581.19 ft, Top of Well
NA ft, Concrete Elevation
578.8 ft, Ground Elevation
8 in, Boring Diameter
2 in, Casing Diameter
2.5 Bottom Protective Pipe
S. S. Casing Material
■ Grout
□ Other _____
1 ft, Top of Bentonite
2.5 ft, Bottom of Bentonite
5.5 ft, Top of Screen

Well Screen

2 in, Diameter
.01 in, Slot
7 Length (ft)
S. S. Material

12.5 ft, Bottom of Screen
13.5 ft, Bottom of Boring

Note: Elevations in feet above mean sea level.

5174

TABLE F-19

MONITORING WELL INSTALLATION RECORD

PROJECT NAME: Fernald Environmental Management Project	**PROJECT LOCATION:** Fernald
BORING ID NO: 1942	**COUNTY:** Hamilton
PROJECT ID: 20.03.05	**STATE:** Ohio
DATE INSTALLED: 4-13-93	**CONTRACTOR:** Pennsylvania Drilling Co.
FIELD ENG./GEOL.: Smith, D. O'Brian	**DRILLED BY:** Kevin Myers, Donny Arthur
TYPE OF SEAL: Bentonite	**DRILLING METHOD:** Auger
DEVELOPEMENT METHOD: Surge-Bail	**TYPE OF BIT:** Hollow Stem Auger
SURVEY DATUM	**SAND PACK TYPE:** 10/20 Silica
	WATER LEVEL/DATE: 573.34/5-7-93

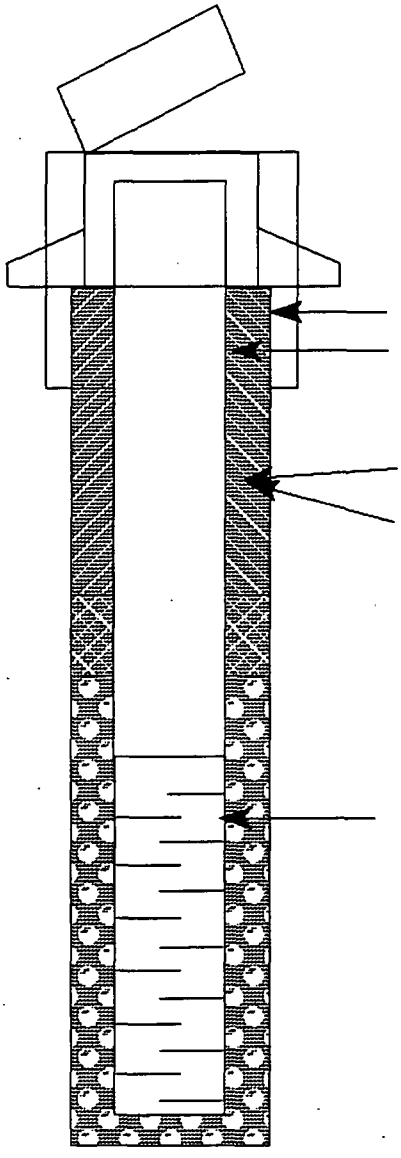

578.42 ft, Top of Casing (Protective pipe)
577.77 ft, Top of Well
NA ft, Concrete Elevation
576.5 ft, Ground Elevation
8 in, Boring Diameter
2 in, Casing Diameter
2.5 Bottom Protective Pipe
S. S. Casing Material
■ Grout
□ Other _____
1.5 ft, Top of Bentonite
4 ft, Bottom of Bentonite
5.1 ft, Top of Screen

Well Screen

2 in, Diameter
.01 in, Slot
98 Length (ft)
S. S. Material

14.9 ft, Bottom of Screen
16 ft, Bottom of Boring

Note: Elevations in feet above mean sea level.

5174

TABLE F-19

MONITORING WELL INSTALLATION RECORD

PROJECT NAME: Fernald Environmental Management Project	**PROJECT LOCATION:** Fernald
BORING ID NO: 1954	**COUNTY:** Hamilton
PROJECT ID: 20.03.05	**STATE:** Ohio
DATE INSTALLED: May 15, 1993	**CONTRACTOR:** Pennsylvania Drilling
FIELD ENG./GEOL.: D. O'Brien	**DRILLED BY:** Jeff Bentley, Bill Sebert
TYPE OF SEAL: Grout/Slurry	**DRILLING METHOD:** NA
DEVELOPEMENT METHOD: Surge-Bail	**TYPE OF BIT:** Auger
SURVEY DATUM	**SAND PACK TYPE:** 10/20 Silica
	WATER LEVEL/DATE: 563.18/7-8-93

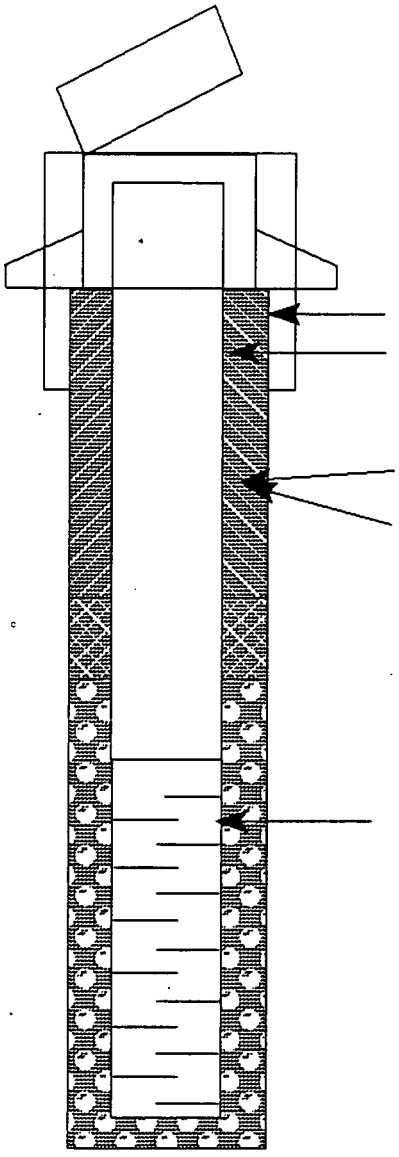

577.64 ft, Top of Casing (Protective pipe)
577.08 ft, Top of Well
575.45 ft, Concrete Elevation
574.95 ft, Ground Elevation
8 in, Boring Diameter
2 in, Casing Diameter
2.5 Bottom Protective Pipe
S. S. Casing Material
■ Grout
□ Other _____
1 ft, Top of Bentonite
4 ft, Bottom of Bentonite
9 ft, Top of Screen

Well Screen

2 in, Diameter
.01 in, Slot
10 Length (ft)
S. S. Material

19 ft, Bottom of Screen
20 ft, Bottom of Boring

1295

Note: Elevations in feet above mean sea level.

TABLE F-19

MONITORING WELL INSTALLATION RECORD

PROJECT NAME: Fernald Environmental Management Project	**PROJECT LOCATION:** Fernald
BORING ID NO: 2016	**COUNTY:** Hamilton
PROJECT ID: NA	**STATE:** Ohio
DATE INSTALLED: NA	**CONTRACTOR:** NA
FIELD ENG./GEOL.: NA	**DRILLED BY:** NA
TYPE OF SEAL: NA	**DRILLING METHOD:** NA
DEVELOPEMENT METHOD: NA	**TYPE OF BIT:** NA
SURVEY DATUM	**SAND PACK TYPE:** NA
	WATER LEVEL/DATE: NA

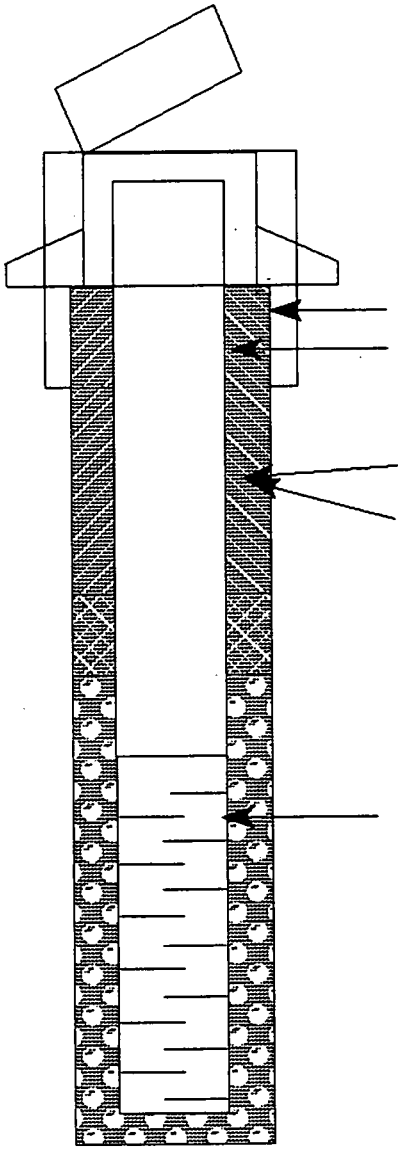

542.39 ft, Top of Casing (Protective pipe)
541.3 ft, Top of Well
540.6 ft, Concrete Elevation
NA ft, Ground Elevation
NA in, Boring Diameter
NA in, Casing Diameter
NA Bottom Protective Pipe
NA Casing Material
☐ Grout
☐ Other _____
NA ft, Top of Bentonite
NA ft, Bottom of Bentonite
NA ft, Top of Screen

Well Screen

NA in, Diameter
NA in, Slot
NA Length (ft)
NA Material
NA ft, Bottom of Screen
NA ft, Bottom of Boring

Note: Elevations in feet above mean sea level.

5174

TABLE F-19

MONITORING WELL INSTALLATION RECORD

PROJECT NAME: Fernald Environmental Management Project	**PROJECT LOCATION:** Fernald
BORING ID NO: 2048	**COUNTY:** Hamilton
PROJECT ID: NA	**STATE:** Ohio
DATE INSTALLED: November 30, 1988	**CONTRACTOR:** NA
FIELD ENG./GEOL.: B. Hertel	**DRILLED BY:** NA
TYPE OF SEAL: Bentonite	**DRILLING METHOD:** Cable-Tool Drilling
DEVELOPEMENT METHOD: NA	**TYPE OF BIT:** Flat Head Hammer
SURVEY DATUM	**SAND PACK TYPE:** NA
	WATER LEVEL/DATE: NA

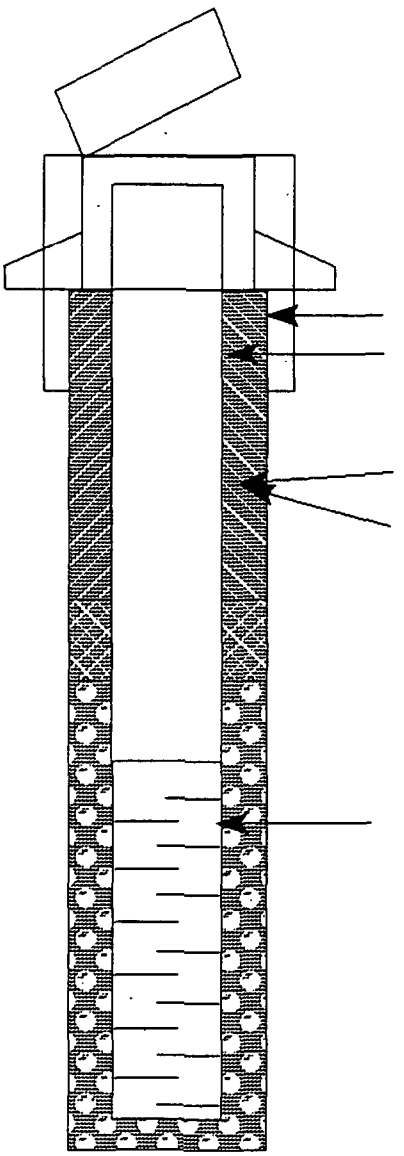

574.02 ft, Top of Casing (Protective pipe)
573.56 ft, Top of Well
NA ft, Concrete Elevation
571.5 ft, Ground Elevation
10 3/8 in, Boring Diameter
4 in, Casing Diameter
2.5 Bottom Protective Pipe
S. S. Casing Material
■ Grout
□ Other _____
39 ft, Top of Bentonite
45 ft, Bottom of Bentonite
50 ft, Top of Screen
Well Screen
4 ID in, Diameter
.01 in, Slot
15 Length (ft)
S. S. Material
65 ft, Bottom of Screen
68 ft, Bottom of Boring

Note: Elevations in feet above mean sea level.

1297

TABLE F-19

MONITORING WELL INSTALLATION RECORD

PROJECT NAME: Fernald Environmental Management Project	**PROJECT LOCATION:** Fernald
BORING ID NO: 2049	**COUNTY:** Hamilton
PROJECT ID: NA	**STATE:** Ohio
DATE INSTALLED: October 14, 1987	**CONTRACTOR:** NA
FIELD ENG./GEOL.: L Wille	**DRILLED BY:** NA
TYPE OF SEAL: Bentonite	**DRILLING METHOD:** Cable-Tool Drilling
DEVELOPEMENT METHOD: NA	**TYPE OF BIT:** Flat Head Hammer
SURVEY DATUM	**SAND PACK TYPE:** NA
	WATER LEVEL/DATE: NA

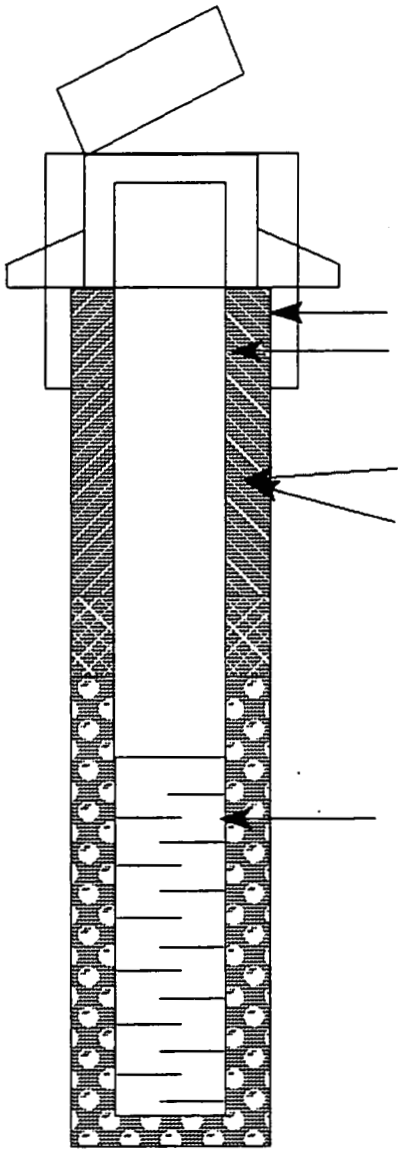

543.13 ft, Top of Casing (Protective pipe)
542.71 ft, Top of Well
541.2 ft, Concrete Elevation
540.7 ft, Ground Elevation
10 3/8 in, Boring Diameter
4 in, Casing Diameter
2.5 Bottom Protective Pipe
S. S. Casing Material
■ Grout
□ Other _____
11 ft, Top of Bentonite
16 ft, Bottom of Bentonite
18 ft, Top of Screen
Well Screen
4 ID in, Diameter
.01 in, Slot
15 Length (ft)
S. S. Material
33 ft, Bottom of Screen
41.5 ft, Bottom of Boring

Note: Elevations in feet above mean sea level.

TABLE F-19

MONITORING WELL INSTALLATION RECORD

PROJECT NAME: Fernald Environmental Management Project	**PROJECT LOCATION:** Fernald
BORING ID NO: 2065	**COUNTY:** Hamilton
PROJECT ID: NA	**STATE:** Ohio
DATE INSTALLED: October 3, 1987	**CONTRACTOR:** NA
FIELD ENG./GEOL.: L. Wille	**DRILLED BY:** NA
TYPE OF SEAL: Bentonite	**DRILLING METHOD:** Cable-Tool Drilling
DEVELOPEMENT METHOD: NA	**TYPE OF BIT:** Flat Head Hammer
SURVEY DATUM	**SAND PACK TYPE:** NA
	WATER LEVEL/DATE: NA

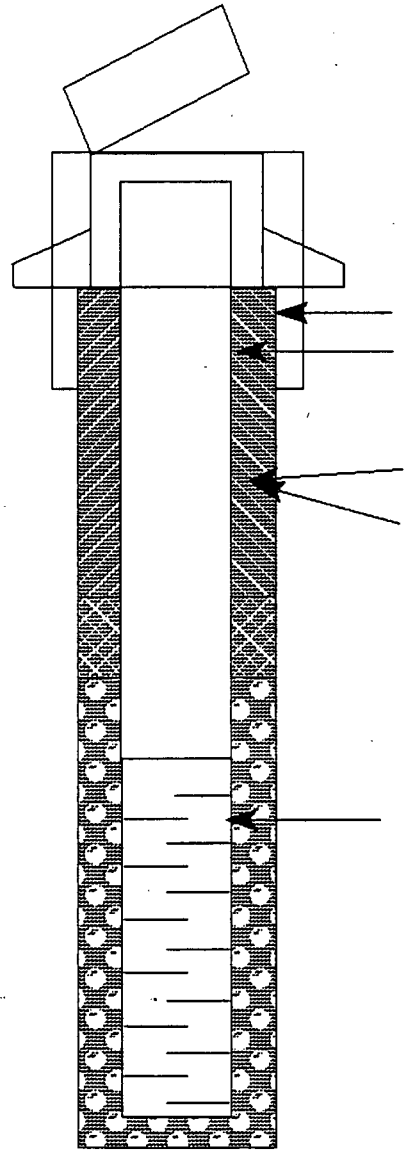

573.81 ft, Top of Casing (Protective pipe)
573.36 ft, Top of Well
NA ft, Concrete Elevation
571.5 ft, Ground Elevation
10 3/8 in, Boring Diameter
4 in, Casing Diameter
-2.5 Bottom Protective Pipe
S. S. Casing Material
■ Grout
□ Other _____
39.5 ft, Top of Bentonite
44.5 ft, Bottom of Bentonite
46.5 ft, Top of Screen
Well Screen
4 ID in, Diameter
.01 in, Slot
15 Length (ft)
S. S. Material
61.5 ft, Bottom of Screen
66.5 ft, Bottom of Boring

Note: Elevations in feet above mean sea level.

1299

TABLE F-19

MONITORING WELL INSTALLATION RECORD

PROJECT NAME: Fernald Environmental Management Project	**PROJECT LOCATION:** Fernald
BORING ID NO: 2385	**COUNTY:** Hamilton
PROJECT ID: NA	**STATE:** Ohio
DATE INSTALLED: April 25, 1990	**CONTRACTOR:** NA
FIELD ENG./GEOL.: M. Swanson	**DRILLED BY:** NA
TYPE OF SEAL: Bentonite	**DRILLING METHOD:** Cable-Tool Drilling
DEVELOPEMENT METHOD: NA	**TYPE OF BIT:** Flat Head Hammer
SURVEY DATUM	**SAND PACK TYPE:** NA
	WATER LEVEL/DATE: NA

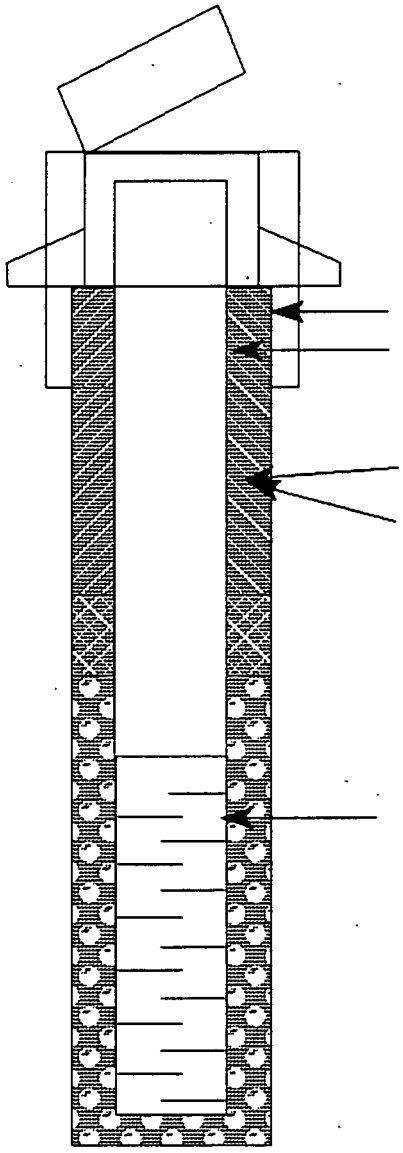

579.86 ft, Top of Casing (Protective pipe)
579.35 ft, Top of Well
NA ft, Concrete Elevation
577.6 ft, Ground Elevation
10 3/8 in, Boring Diameter
4 in, Casing Diameter
2.5 Bottom Protective Pipe
S. S. Casing Material
■ Grout
□ Other _____
42 ft, Top of Bentonite
48 ft, Bottom of Bentonite
53 ft, Top of Screen

Well Screen

4 ID in, Diameter
.01 in, Slot
15 Length (ft)
S. S. Material

68 ft, Bottom of Screen
75 ft, Bottom of Boring

Note: Elevations in feet above mean sea level.

1300

TABLE F-19

MONITORING WELL INSTALLATION RECORD

PROJECT NAME: Fernald Environmental Management Project	**PROJECT LOCATION:** Fernald
BORING ID NO: 2401	**COUNTY:** Hamilton
PROJECT ID: NA	**STATE:** Ohio
DATE INSTALLED: March 5, 1992	**CONTRACTOR:** NA
FIELD ENG./GEOL.: NA	**DRILLED BY:** NA
TYPE OF SEAL: Bentonite	**DRILLING METHOD:** Cable-Tool Drilling
DEVELOPEMENT METHOD: NA	**TYPE OF BIT:** Churn Bit
SURVEY DATUM	**SAND PACK TYPE:** NA
	WATER LEVEL/DATE: NA

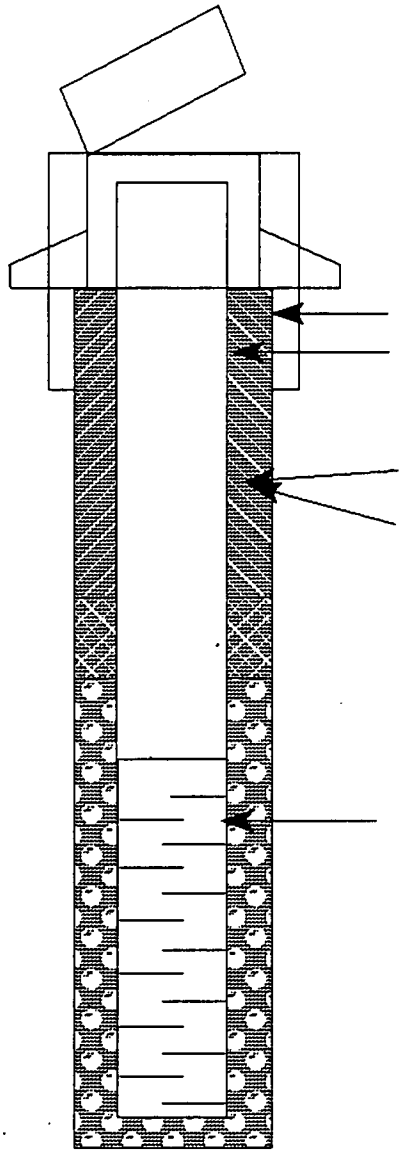

571.86 ft, Top of Casing (Protective pipe)
571.26 ft, Top of Well
NA ft, Concrete Elevation
569.4 ft, Ground Elevation
10 3/8 in, Boring Diameter
4 in, Casing Diameter
2.5 Bottom Protective Pipe
S. S. Casing Material
■ Grout
□ Other _____
35.7 ft, Top of Bentonite
40 ft, Bottom of Bentonite
44 ft, Top of Screen
Well Screen
4 ID in, Diameter
.01 in, Slot
15 Length (ft)
S. S. Material
59 ft, Bottom of Screen
65 ft, Bottom of Boring

Note: Elevations in feet above mean sea level.

5174

TABLE F-19

MONITORING WELL INSTALLATION RECORD

PROJECT NAME: Fernald Environmental Management Project	**PROJECT LOCATION:** Fernald
BORING ID NO: 2943	**COUNTY:** Hamilton
PROJECT ID: 20.03.05	**STATE:** Ohio
DATE INSTALLED: April 20, 1993	**CONTRACTOR:** Pennsylvania Drilling Co.
FIELD ENG./GEOL.: Ken Geiger	**DRILLED BY:** Dave Newman
TYPE OF SEAL: Grout/Slurry	**DRILLING METHOD:** Cable Tool
DEVELOPEMENT METHOD: Bail-Surge-Bail	**TYPE OF BIT:** Hammer Percussion Bit
SURVEY DATUM	**SAND PACK TYPE:** 10/20 Silica
	WATER LEVEL/DATE: 523.13/5-7-93

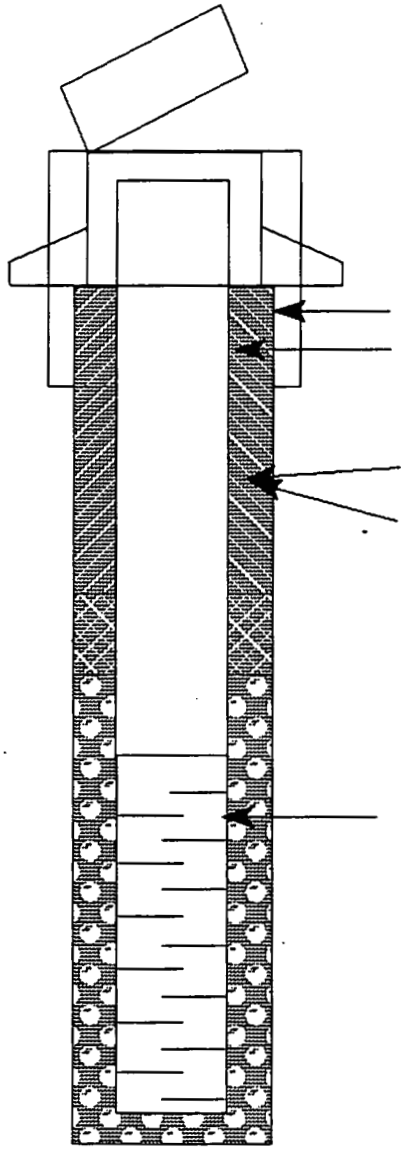

575.94 ft, Top of Casing (Protective pipe)
575.64 ft, Top of Well
NA ft, Concrete Elevation
573.5 ft, Ground Elevation
10 3/8 in, Boring Diameter
4 in, Casing Diameter
2.5 Bottom Protective Pipe
S. S. Casing Material
■ Grout
□ Other _____
1 ft, Top of Bentonite
39 ft, Bottom of Bentonite
49 ft, Top of Screen

Well Screen

4 in; Diameter
.01 in, Slot
15 Length (ft)
S. S. Material

64 ft, Bottom of Screen
70 ft, Bottom of Boring

Note: Elevations in feet above mean sea level.

TABLE F-19

MONITORING WELL INSTALLATION RECORD

PROJECT NAME: Fernald Environmental Management Project	**PROJECT LOCATION:** Fernald
BORING ID NO: 2944	**COUNTY:** Hamilton
PROJECT ID: 20.03.05	**STATE:** Ohio
DATE INSTALLED: 6-23-93	**CONTRACTOR:** Pennsylvania Drilling Co.
FIELD ENG./GEOL.: D. O'Brian	**DRILLED BY:** NA
TYPE OF SEAL: Grout/Slurry	**DRILLING METHOD:** Cable Tool
DEVELOPEMENT METHOD: Bail-Surge-Bail	**TYPE OF BIT:** Churn Bit
SURVEY DATUM	**SAND PACK TYPE:** 10/20 Silica
	WATER LEVEL/DATE: 522.31/7-8-93

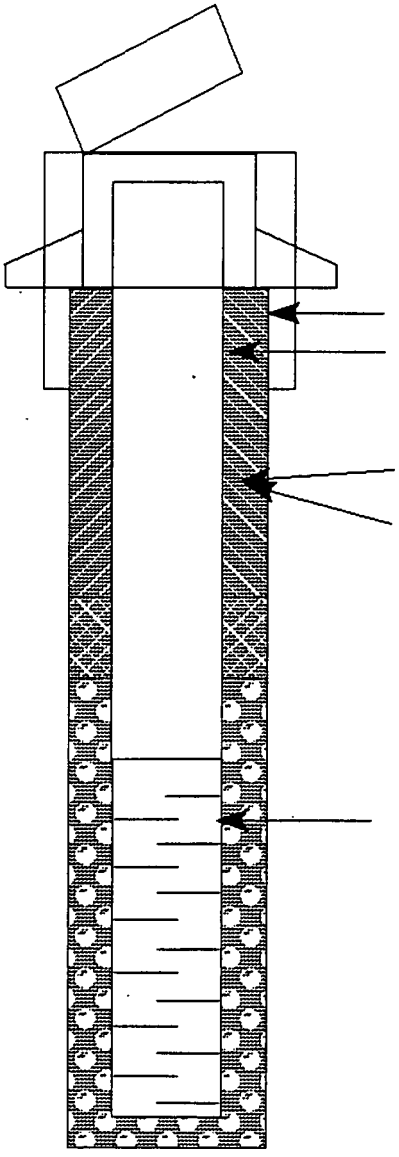

576.38 ft, Top of Casing (Protective pipe)
576.05 ft, Top of Well
NA ft, Concrete Elevation
574.1 ft, Ground Elevation
10 3/8 in, Boring Diameter
4 in, Casing Diameter
2.5 Bottom Protective Pipe
S. S. Casing Material
■ Grout
□ Other _____
1 ft, Top of Bentonite
39.9 ft, Bottom of Bentonite
50 ft, Top of Screen
Well Screen
4 in, Diameter
.01 in, Slot
15 Length (ft)
S. S. Material
65 ft, Bottom of Screen
67 ft, Bottom of Boring

Note: Elevations in feet above mean sea level.

1303

TABLE F-19

MONITORING WELL INSTALLATION RECORD

PROJECT NAME: Fernald Environmental Management Project	**PROJECT LOCATION:** Fernald
BORING ID NO: 2945	**COUNTY:** Hamilton
PROJECT ID: 20.03.05	**STATE:** Ohio
DATE INSTALLED: April 7, 1993	**CONTRACTOR:** Pennsylvania Drilling
FIELD ENG./GEOL.: Ken Geiger	**DRILLED BY:** Dave Newman, Jeff Bentley
TYPE OF SEAL: Grout/Slurry	**DRILLING METHOD:** Cable Tool
DEVELOPEMENT METHOD: Bail-Surge-Bail	**TYPE OF BIT:** Hammer Percussion Bit
SURVEY DATUM	**SAND PACK TYPE:** 10/20 Silica
	WATER LEVEL/DATE: 523.71/5-7-93

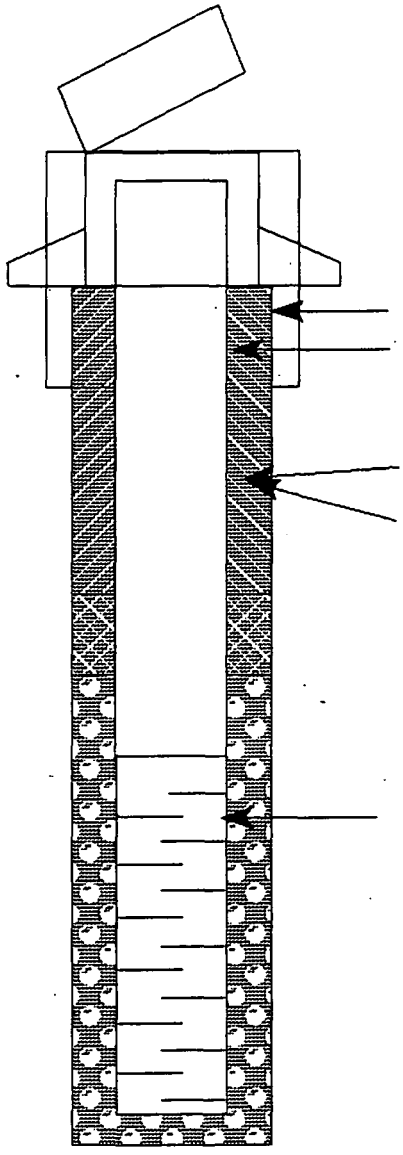

569.24 ft, Top of Casing (Protective pipe)
568.71 ft, Top of Well
NA ft, Concrete Elevation
566.7 ft, Ground Elevation
10 3/8 in, Boring Diameter
4 in, Casing Diameter
2.5 Bottom Protective Pipe
S. S. Casing Material
■ Grout
□ Other _____
1 ft, Top of Bentonite
28.5 ft, Bottom of Bentonite
38.5 ft, Top of Screen
Well Screen
4 in, Diameter
.02 in, Slot
15 Length (ft)
S. S. Material
53.5 ft, Bottom of Screen
60 ft, Bottom of Boring

Note: Elevations in feet above mean sea level.

TABLE F-19

MONITORING WELL INSTALLATION RECORD

PROJECT NAME: Fernald Environmental Management Project	**PROJECT LOCATION:** Fernald
BORING ID NO: 2954	**COUNTY:** Hamilton
PROJECT ID: 20.03.05	**STATE:** Ohio
DATE INSTALLED: June 7, 1993	**CONTRACTOR:** Pennsylvania Drilling
FIELD ENG./GEOL.: Ken Geiger	**DRILLED BY:** Dave Newman
TYPE OF SEAL: Grout/Slurry	**DRILLING METHOD:** Cable Tool
DEVELOPEMENT METHOD: Bail-Surge-Bail	**TYPE OF BIT:** Hammer Percussion Bit
SURVEY DATUM	**SAND PACK TYPE:** 10/20 Silica
	WATER LEVEL/DATE: 522.30/7-8-93

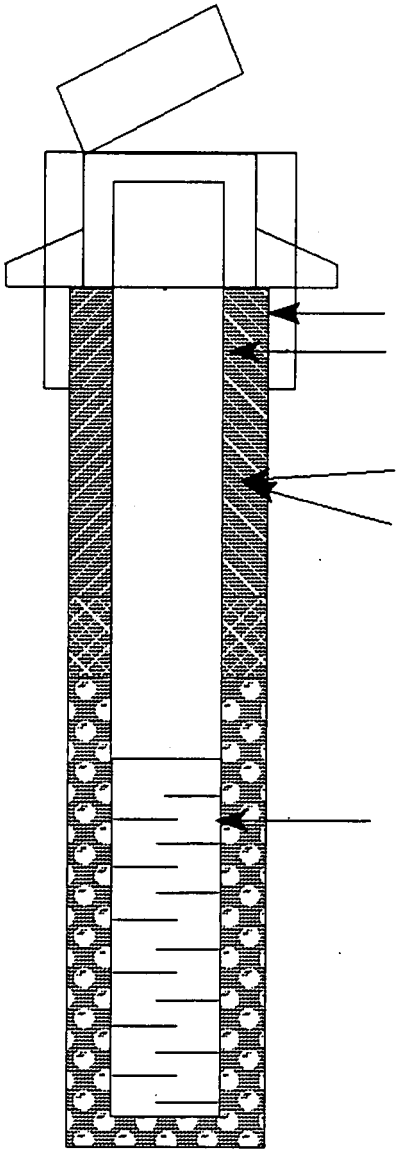

578.41 ft, Top of Casing (Protective pipe)
577.82 ft, Top of Well
NA ft, Concrete Elevation
576 ft, Ground Elevation
10 3/8 in, Boring Diameter
4 in, Casing Diameter
2.5 Bottom Protective Pipe
S. S. Casing Material
■ Grout
□ Other _____
1 ft, Top of Bentonite
37 ft, Bottom of Bentonite
47 ft, Top of Screen

Well Screen

4 in, Diameter
.01 in, Slot
15 Length (ft)
S. S. Material

62 ft, Bottom of Screen
65 ft, Bottom of Boring

Note: Elevations in feet above mean sea level.

TABLE F-19

MONITORING WELL INSTALLATION RECORD

PROJECT NAME: Fernald Environmental Management Project	**PROJECT LOCATION:** Fernald
BORING ID NO: 3045	**COUNTY:** Hamilton
PROJECT ID: NA	**STATE:** Ohio
DATE INSTALLED: May 17, 1990	**CONTRACTOR:** NA
FIELD ENG./GEOL.: M. Garman	**DRILLED BY:** NA
TYPE OF SEAL: Bentonite	**DRILLING METHOD:** Cable-Tool Drilling
DEVELOPEMENT METHOD: NA	**TYPE OF BIT:** Flat Head Hammer
SURVEY DATUM	**SAND PACK TYPE:** NA
	WATER LEVEL/DATE: NA

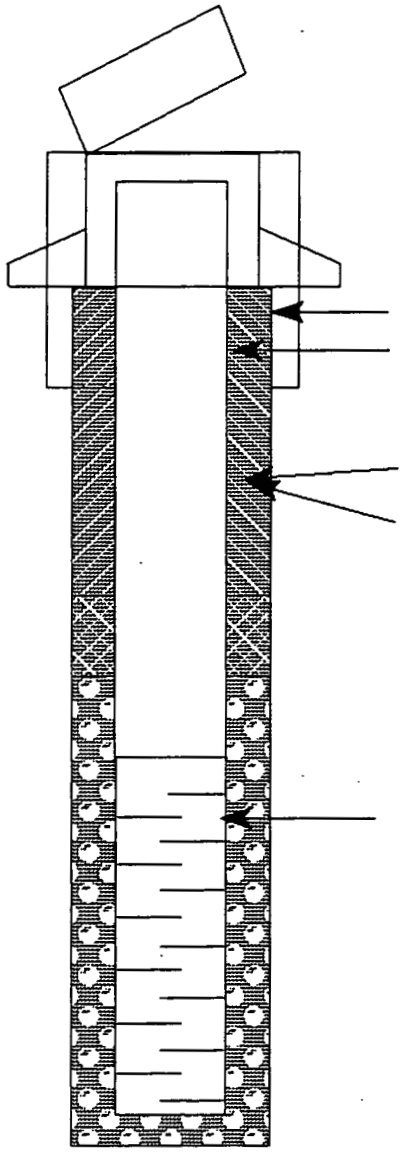

548.42 ft, Top of Casing (Protective pipe)
547.86 ft, Top of Well
546.23 ft, Concrete Elevation
545.83 ft, Ground Elevation
10 3/8 in, Boring Diameter
4 in, Casing Diameter
2.5 Bottom Protective Pipe
S. S. Casing Material
■ Grout
□ Other _____
78 ft, Top of Bentonite
106.5 ft, Bottom of Bentonite
83 ft, Top of Screen
Well Screen
_____ in, Diameter
.01 in, Slot
10 Length (ft)
S. S. Material
93 ft, Bottom of Screen
106.5 ft, Bottom of Boring

Note: Elevations in feet above mean sea level.

1306

TABLE F-19

MONITORING WELL INSTALLATION RECORD

PROJECT NAME: Fernald Environmental Management Project	**PROJECT LOCATION:** Fernald
BORING ID NO: 3046	**COUNTY:** Hamilton
PROJECT ID: NA	**STATE:** Ohio
DATE INSTALLED: June 4, 1990	**CONTRACTOR:** NA
FIELD ENG./GEOL.: M. Swanson	**DRILLED BY:** NA
TYPE OF SEAL: Grout	**DRILLING METHOD:** Cable-Tool Drilling
DEVELOPEMENT METHOD: NA	**TYPE OF BIT:** Flat Head Hammer
SURVEY DATUM	**SAND PACK TYPE:** NA
	WATER LEVEL/DATE: NA

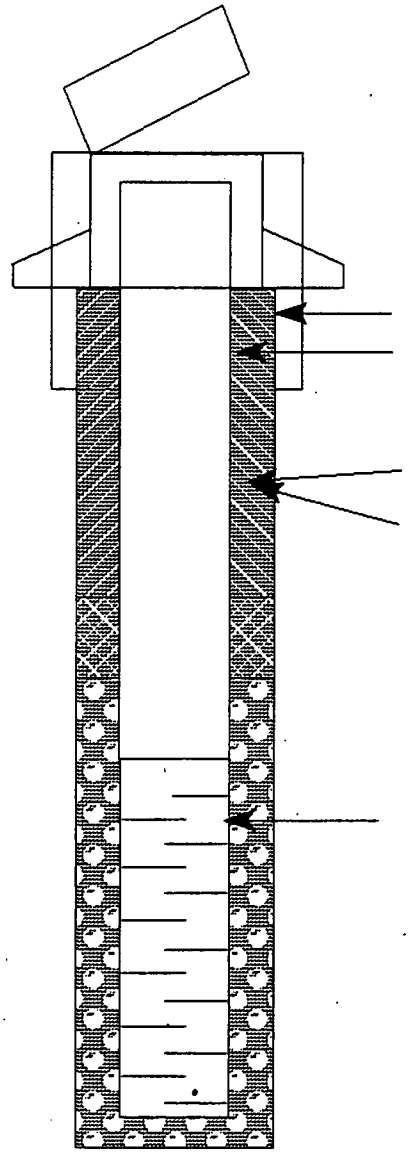

579.09 ft, Top of Casing (Protective pipe)
578.6 ft, Top of Well
576.96 ft, Concrete Elevation
576.46 ft, Ground Elevation
10 3/8 in, Boring Diameter
4 in, Casing Diameter
-2.5 Bottom Protective Pipe
S. S. Casing Material
■ Grout
□ Other _____
0 ft, Top of Grout
110 ft, Bottom of Grout
115 ft, Top of Screen

Well Screen

4 ID in, Diameter
.01 in, Slot
10 Length (ft)
S. S. Material

125 ft, Bottom of Screen
136.5 ft, Bottom of Boring

Note: Elevations in feet above mean sea level.

1307

TABLE F-19

MONITORING WELL INSTALLATION RECORD

PROJECT NAME: Fernald Environmental Management Project	**PROJECT LOCATION:** Fernald
BORING ID NO: 3049	**COUNTY:** Hamilton
PROJECT ID: NA	**STATE:** Ohio
DATE INSTALLED: November 8, 1988	**CONTRACTOR:** NA
FIELD ENG./GEOL.: L. Adams	**DRILLED BY:** NA
TYPE OF SEAL: Grout	**DRILLING METHOD:** Cable-Tool Drilling
DEVELOPEMENT METHOD: NA	**TYPE OF BIT:** Flat Head Hammer
SURVEY DATUM	**SAND PACK TYPE:** NA
	WATER LEVEL/DATE: NA

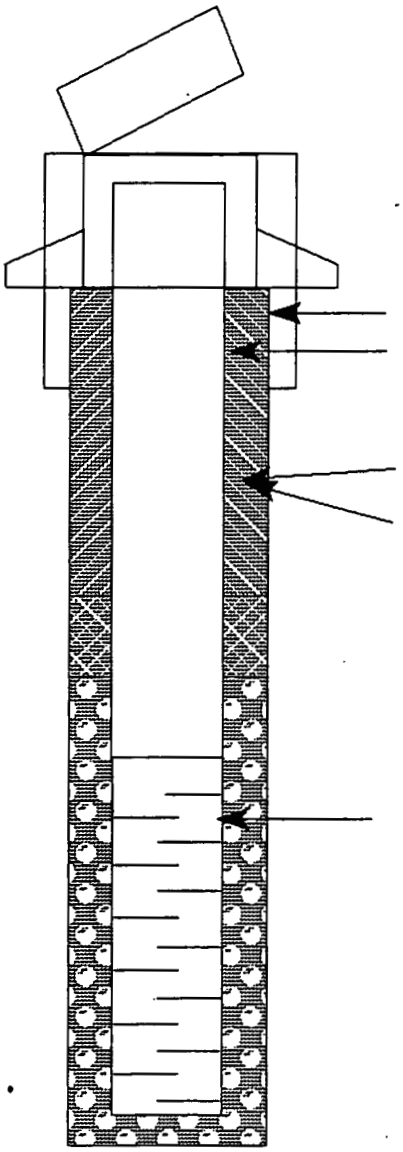

543.12 ft, Top of Casing (Protective pipe)
542.5 ft, Top of Well
NA ft, Concrete Elevation
540.7 ft, Ground Elevation
10 3/8 in, Boring Diameter
4 in, Casing Diameter
2.5 Bottom Protective Pipe
S. S. Casing Material
□ Grout
■ Other Bentonite
5 ft, Top of Grout
73 ft, Bottom of Grout
78 ft, Top of Screen

Well Screen

4 ID in, Diameter
.01 in, Slot
10 Length (ft)
S. S. Material

88 ft, Bottom of Screen
101.5 ft, Bottom of Boring

Note: Elevations in feet above mean sea level.

1308

TABLE F-19

MONITORING WELL INSTALLATION RECORD

PROJECT NAME: Fernald Environmental Management Project	**PROJECT LOCATION:** Fernald
BORING ID NO: 3065	**COUNTY:** Hamilton
PROJECT ID: NA	**STATE:** Ohio
DATE INSTALLED: November 9, 1988	**CONTRACTOR:** NA
FIELD ENG./GEOL.: D. Hockstra	**DRILLED BY:** NA
TYPE OF SEAL: Grout	**DRILLING METHOD:** Cable-Tool Drilling
DEVELOPEMENT METHOD: NA	**TYPE OF BIT:** Flat Head Hammer
SURVEY DATUM	**SAND PACK TYPE:** NA
	WATER LEVEL/DATE: NA

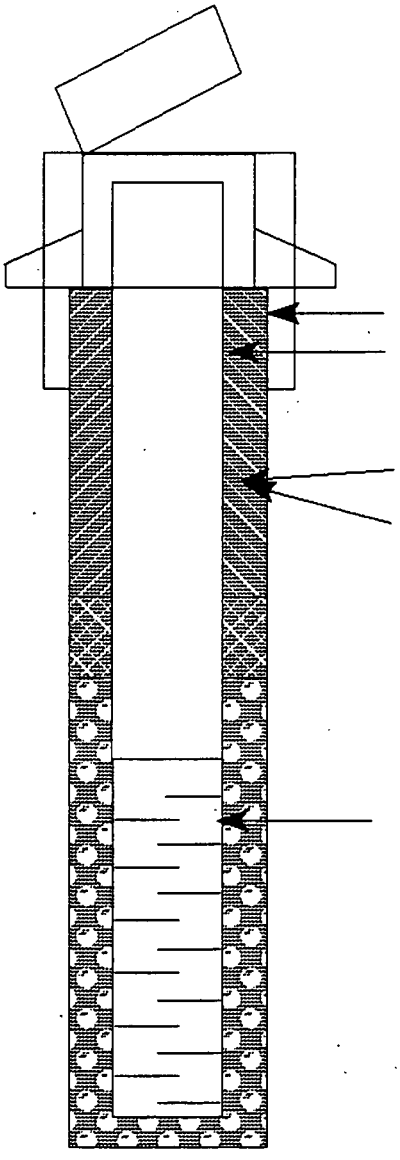

573.93 ft, Top of Casing (Protective pipe)
573.41 ft, Top of Well
NA ft, Concrete Elevation
571.7 ft, Ground Elevation
10 3/8 in, Boring Diameter
4 in, Casing Diameter
2.5 Bottom Protective Pipe
S. S. Casing Material
□ Grout
■ Other Bentonite
2 ft, Top of Grout
103 ft, Bottom of Grout
110 ft, Top of Screen
Well Screen
4 OD in, Diameter
.01 in, Slot
10 Length (ft)
S. S. Material
120 ft, Bottom of Screen
127.3 ft, Bottom of Boring

Note: Elevations in feet above mean sea level.

1309

TABLE F-19

MONITORING WELL INSTALLATION RECORD

PROJECT NAME: Fernald Environmental Management Project	**PROJECT LOCATION:** Fernald
BORING ID NO: 3385	**COUNTY:** Hamilton
PROJECT ID: NA	**STATE:** Ohio
DATE INSTALLED: July 1, 1990	**CONTRACTOR:** NA
FIELD ENG./GEOL.: M. Swanson	**DRILLED BY:** NA
TYPE OF SEAL: Grout	**DRILLING METHOD:** Cable-Tool Drilling
DEVELOPEMENT METHOD: NA	**TYPE OF BIT:** Flat Head Hammer
SURVEY DATUM	**SAND PACK TYPE:** NA
	WATER LEVEL/DATE: NA

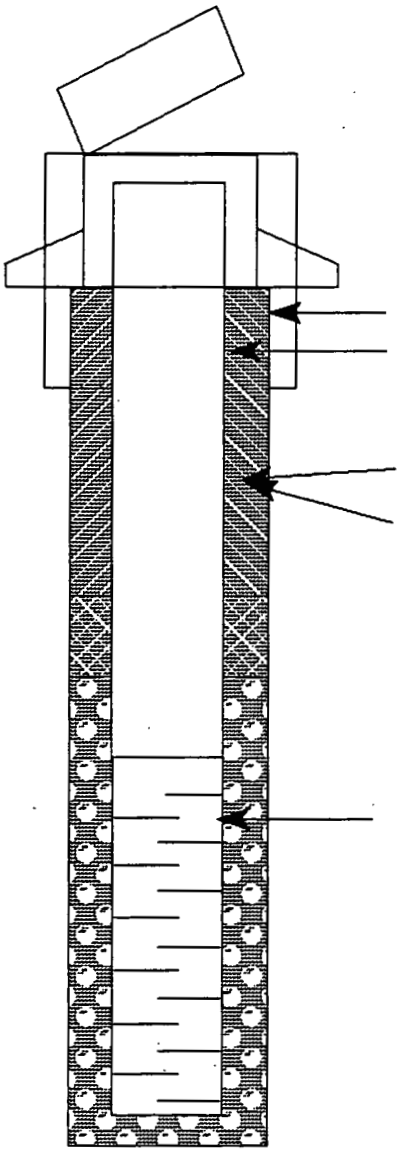

579.78 ft, Top of Casing (Protective pipe)
579.29 ft, Top of Well
NA ft, Concrete Elevation
577.4 ft, Ground Elevation
10 3/8 in, Boring Diameter
4 in, Casing Diameter
-2.5 Bottom Protective Pipe
S. S. Casing Material
■ Grout
□ Other _____
0 ft, Top of Grout
110 ft, Bottom of Grout
115 ft, Top of Screen

Well Screen

4 ID in, Diameter
.01 in, Slot
10 Length (ft)
S. S. Material

125 ft, Bottom of Screen
126.7 ft, Bottom of Boring

Note: Elevations in feet above mean sea level.

TABLE F-19

MONITORING WELL INSTALLATION RECORD

PROJECT NAME: Fernald Environmental Management Project	**PROJECT LOCATION:** Fernald
BORING ID NO: 4016	**COUNTY:** Hamilton
PROJECT ID: NA	**STATE:** Ohio
DATE INSTALLED: January 5, 1989	**CONTRACTOR:** NA
FIELD ENG./GEOL.: M. Slusarski	**DRILLED BY:** NA
TYPE OF SEAL: Grout	**DRILLING METHOD:** Cable-Tool Drilling
DEVELOPEMENT METHOD: NA	**TYPE OF BIT:** Flat Head Hammer
SURVEY DATUM	**SAND PACK TYPE:** NA
	WATER LEVEL/DATE: NA

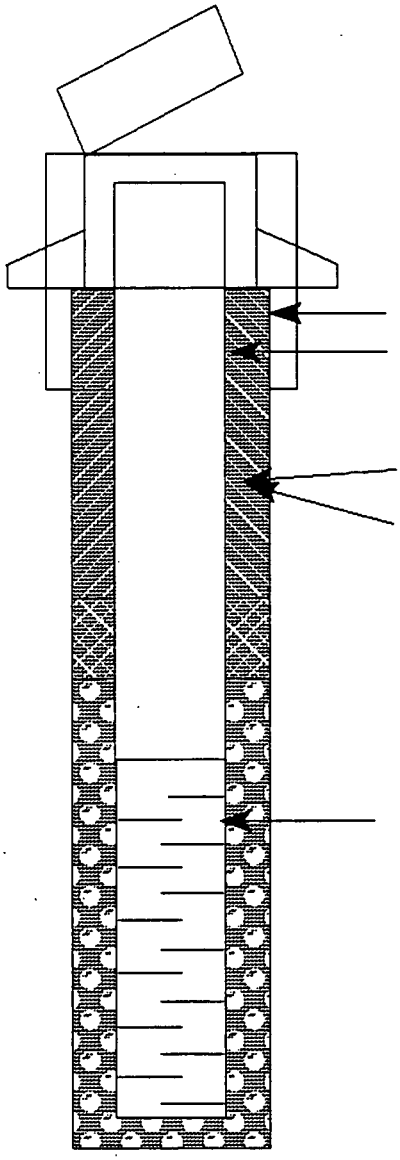

542.25 ft, Top of Casing (Protective pipe)
541.7 ft, Top of Well
NA ft, Concrete Elevation
539.7 ft, Ground Elevation
10 3/8 in, Boring Diameter
4 in, Casing Diameter
2.5 Bottom Protective Pipe
_____ Casing Material
■ Grout
□ Other _____
0 ft, Top of Grout
137 ft, Bottom of Grout
143 ft, Top of Screen
Well Screen
4 ID in, Diameter
.01 in, Slot
10.3 Length (ft)
S. S. Material
153.3 ft, Bottom of Screen
163.2 ft, Bottom of Boring

Note: Elevations in feet above mean sea level.

1311

TABLE F-19

MONITORING WELL INSTALLATION RECORD

PROJECT NAME: Fernald Environmental Management Project	**PROJECT LOCATION:** Fernald
BORING ID NO: 11032	**COUNTY:** Hamilton
PROJECT ID: 20.03.05	**STATE:** Ohio
DATE INSTALLED: 6-25-93	**CONTRACTOR:** Pennsylvania Drilling Co.
FIELD ENG./GEOL.: B. E. Muller	**DRILLED BY:** NA
TYPE OF SEAL: Grout/Slurry	**DRILLING METHOD:** Hollow Stem Auger
DEVELOPEMENT METHOD: Surge-Bail	**TYPE OF BIT:** Hollow Stem Auger
SURVEY DATUM	**SAND PACK TYPE:** 10/20 Silica
	WATER LEVEL/DATE: 572.20/7-8-93

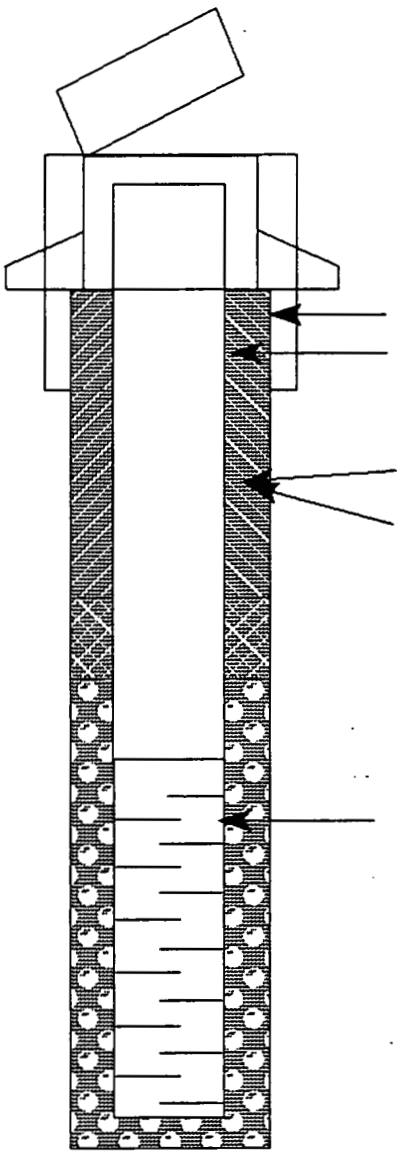

579.56 ft, Top of Casing (Protective pipe)
579.06 ft, Top of Well
577.57 ft, Concrete Elevation
577.07 ft, Ground Elevation
8 in, Boring Diameter
2 in, Casing Diameter
2.75 Bottom Protective Pipe
S. S. Casing Material

■ Grout

□ Other _____

1 ft, Top of Bentonite

2 ft, Bottom of Bentonite

5.25 ft, Top of Screen

Well Screen

2 in, Diameter

.01 in, Slot

5 Length (ft)
S. S. Material

10.25 ft, Bottom of Screen
15.25 ft, Bottom of Boring

Note: Elevations in feet above mean sea level.

1312

5174

TABLE F-19

MONITORING WELL INSTALLATION RECORD

PROJECT NAME: Fernald Environmental Management Project	**PROJECT LOCATION:** Fernald
BORING ID NO: 11085	**COUNTY:** Hamilton
PROJECT ID: 20.03.05	**STATE:** Ohio
DATE INSTALLED: 5-28-93	**CONTRACTOR:** Pennsylvania Drilling Co.
FIELD ENG./GEOL.: A. Como	**DRILLED BY:** NA
TYPE OF SEAL: Grout/Slurry	**DRILLING METHOD:** 4 1/4 Hollow Stem Auger
DEVELOPEMENT METHOD: Surge-Bail	**TYPE OF BIT:** 4 1/4 Hollow Stem Auger
SURVEY DATUM	**SAND PACK TYPE:** 10/20 Silica
	WATER LEVEL/DATE: 573.4/6-2-93

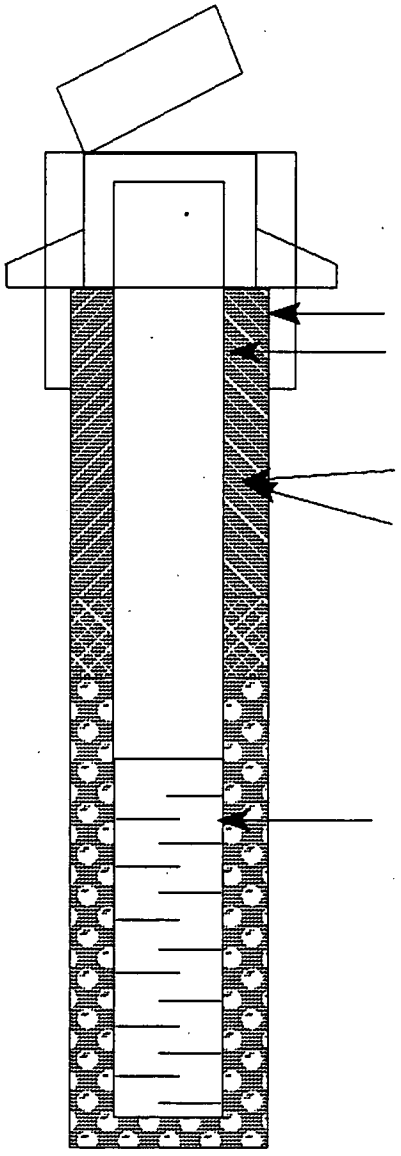

579.79 ft, Top of Casing (Protective pipe)
579.52 ft, Top of Well
NA ft, Concrete Elevation
577.6 ft, Ground Elevation
8 in, Boring Diameter
2 in, Casing Diameter
2.5 Bottom Protective Pipe
S. S. Casing Material
■ Grout
□ Other _____
1 ft, Top of Bentonite
4 ft, Bottom of Bentonite
6 ft, Top of Screen

Well Screen

2 in, Diameter
10 in, Slot
10 Length (ft)
S. S. Material

16 ft, Bottom of Screen
16.5 ft, Bottom of Boring

Note: Elevations in feet above mean sea level.

1313

TABLE F-20A

SOUTH FIELD
GROUNDWATER ELEVATION DATA[a], 1988 - 1992
OPERABLE UNIT 2 REMEDIAL INVESTIGATION
FERNALD ENVIRONMENTAL MANAGEMENT PROJECT

Year	Well No.	January	February	March	April	May	June	July	August	September	October	November	December
1988	1014	DRY	DRY	DRY	DRY	DRY	DRY	DRY	DRY	DRY	DRY	DRY	DRY
1988	1020	569.50	571.68	572.34	571.58	569.66	568.58	567.16	567.18	566.51	565.98	568.42	568.91
1988	1046	NMT[b]	NMT	NMT	NMT	569.28	567.69	565.48	564.68	563.98	563.53	563.18	563.66
1988	1065	561.75	565.71	566.72	565.96	563.81	562.38	561.41	558.06	559.69	559.66	559.51	560.71
1988	2014	NMT	DRY	521.56	521.89	DRY	520.20	DRY	519.04	518.49	518.06	517.69	517.49
1988	2020	NMT	519.54	520.44	521.17	521.18	520.22	519.82	519.21	518.64	518.20	517.60	517.60
1988	2065	518.96	519.57	520.72	521.29	521.00	520.36	519.61	519.06	518.44	517.98	517.58	517.43
1989	1014	DRY	DRY	DRY	DRY	DRY	DRY	DRY	DRY	DRY	DRY	DRY	DRY
1989	1020	571.68	571.01	572.31	571.47	571.83	572.06	569.67	568.45	570.06	567.48	571.90	569.56
1989	1046	569.66	570.76	574.10	572.95	573.73	572.32	569.59	566.29	567.04	564.83	570.33	567.64
1989	1065	566.12	565.09	567.86	565.47	566.11	565.71	563.11	561.82	562.78	561.16	564.28	563.52
1989	2014	519.02	519.06	521.02	522.90	523.84	524.30	522.94	521.95	521.53	519.51	521.16	520.24
1989	2020	517.68	518.59	519.52	521.50	522.96	524.02	524.21	522.62	522.04	520.00	521.00	521.02
1989	2046	518.26	518.95	520.16	522.30	523.49	524.11	523.17	522.37	521.89	519.79	520.17	520.71
1989	2065	517.75	518.44	519.59	521.81	523.23	524.17	523.34	522.45	521.84	519.78	520.93	520.71
1990	1014	DRY	DRY	DRY	DRY	525.61	525.44	525.16	524.11	525.10	525.09	525.05	DRY
1990	1020	572.00	572.08	571.83	571.67	572.25	569.93	571.12	569.24	570.00	NMT	570.90	571.55
1990	1046	573.31	573.66	572.65	573.11	574.58	571.19	571.29	567.98	566.28	573.73	571.24	572.90
1990	1065	567.45	566.36	565.27	565.66	567.60	564.71	565.25	562.58	562.22	NMT	564.67	565.54
1990	1516	NMT	NMT	NMT	NMT	NMT	524.59	524.00	522.98	522.20	523.23	523.06	528.29
1990	1517	NMT	NMT	NMT	NMT	NMT	524.54	524.01	522.97	522.21	523.29	523.07	523.31
1990	1518	NMT	NMT	NMT	NMT	NMT	527.57	524.06	522.93	522.23	523.42	523.14	523.34
1990	1523	NMT	NMT	NMT	NMT	NMT	NMT	570.08	568.87	569.14	570.65	NMT	570.22
1990	2014	521.27	522.50	523.72	523.96	525.44	524.41	524.02	522.87	522.13	523.34	523.07	523.31

See footnotes at end of table.

1314

5174

TABLE F-20A
(Continued)

Year	Well No.	January	February	March	April	May	June	July	August	September	October	November	December
1990	2020	520.80	521.62	523.03	523.40	523.92	524.81	524.10	523.67	522.86	NMT	523.10	523.28
1990	2046	521.01	522.21	523.53	523.81	524.75	524.86	524.13	523.45	522.57	523.07	523.26	523.69
1990	2065	520.72	521.10	523.14	523.33	524.33	524.55	523.86	523.17	522.45	522.15	522.82	522.90
1991	1014	525.42	525.22	DRY	NMT	525.31	NMT	524.14	525.13	525.13	DRY	DRY	DRY
1991	1020	572.20	572.47	572.36	NMT	NMT	569.00	568.23	568.40	568.06	566.84	566.92	569.31
1991	1046	574.37	574.59	573.55	NMT	570.87	NMT	565.84	565.20	565.09	564.19	563.83	564.00
1991	1065	567.06	567.50	567.44	NMT	563.42	NMT	561.22	560.14	560.44	560.10	560.42	560.03
1991	1516	525.05	525.10	525.06	NMT	524.26	NMT	522.41	521.78	521.43	520.57	519.95	DRY
1991	1517	525.09	525.12	525.12	NMT	524.32	NMT	522.43	521.81	521.43	520.42	519.93	519.35
1991	1518	525.10	525.15	525.10	NMT	524.27	NMT	522.48	521.82	521.46	520.47	519.97	519.40
1991	1523	570.67	571.21	570.87	NMT	NMT	568.76	568.38	568.70	568.97	567.86	565.73	569.10
1991	2014	525.06	525.11	525.02	NMT	524.27	NMT	522.41	521.76	521.39	520.39	519.92	519.33
1991	2020	524.49	524.98	525.02	NMT	NMT	524.28	523.02	521.71	521.70	NMT	NMT	519.36
1991	2046	524.92	525.13	525.18	NMT	524.90	NMT	522.88	522.15	521.72	520.72	520.19	519.49
1991	2065	525.09	525.01	524.92	NMT	NMT	NMT	522.62	521.77	521.35	520.42	519.75	519.17
1992	1014	DRY	DRY	DRY	525.04	NMT	525.04	DRY	525.07	DRY	DRY	DRY	DRY
1992	1020	571.35	570.37	570.07	570.87	NMT	569.11	NMT	569.60	568.79	570.21	571.32	571.16
1992	1046	566.02	569.03	571.65	572.53	NMT	567.41	569.85	568.63	567.19	567.09	570.25	570.87
1992	1065	564.83	564.61	564.88	568.95	NMT	562.87	NMT	563.36	562.18	563.14	564.96	565.22
1992	1516	519.64	519.65	DRY	NMT	NMT	NMT	520.30	520.03	NMT	NMT	NMT	520.72
1992	1517	519.61	519.67	519.37	NMT	NMT	NMT	520.33	517.43	NMT	NMT	NMT	520.75
1992	1518	519.68	519.73	519.92	NMT	NMT	NMT	DRY	520.08	NMT	NMT	NMT	520.80
1992	1523	570.28	569.57	570.36	569.90	NMT	568.86	570.16	568.89	568.78	569.64	570.38	569.92
1992	2014	519.71	518.72	519.36	520.42	NMT	519.45	520.50	520.05	519.70	519.72	519.96	520.86
1992	2020	NMT	520.07	519.21	NMT	519.49	NMT	NMT	522.16	519.70	519.60	519.62	520.38
1992	2046	519.50	519.67	519.57	520.13	NMT	519.87	520.27	520.22	519.87	519.77	519.81	520.57
1992	2065	519.16	519.06	518.91	519.26	NMT	519.44	518.85	520.29	519.99	519.20	519.67	520.53

See footnotes at end of table.

TABLE F-20A
(Continued)

Year	Well No.	January	February	March	April	May	June	July	August	September	October	November	December
MISCELLANEOUS GROUNDWATER ELEVATION													
1988	1025	NMT	569.82	570.33	570.04	561.54	568.34	570.85	571.07	571.16	570.88	570.75	570.63
1988	1064	NMT	NMT	NMT	NMT	NMT	NMT	NMT	NMT	NMT	NMT	NMT	559.92
1988	1080	NMT	NMT	NMT	NMT	560.15	567.24	567.55	560.89	567.71	567.83	567.73	568.18
1988	1081	575.10	575.95	576.69	576.89	575.49	575.35	575.05	575.04	574.95	574.71	574.68	575.05
1988	2068	517.88	518.34	519.34	520.10	520.17	519.75	518.81	518.17	517.52	517.13	516.50	516.58
1989	1025	570.34	563.52	570.48	569.89	571.37	571.73	571.75	571.95	DRY	570.27	571.62	570.84
1989	1064	566.90	577.59	577.35	577.55	577.06	574.76	573.94	NMT	573.44	571.12	573.28	572.46
1989	1080	568.61	568.40	567.77	NMT	568.95	568.74	568.06	568.05	566.85	566.62	568.66	NMT
1989	1081	575.73	575.87	576.69	576.65	576.72	575.25	575.64	570.27	575.51	575.35	575.53	575.10
1989	2068	516.43	517.38	518.45	520.65	522.20	523.52	522.80	521.94	521.14	519.17	519.98	519.75
1989	2106	NMT	518.78	520.45	522.23	523.09	523.43	522.40	521.51	NMT	519.07	520.35	519.97
1990	1025	570.63	NMT	NMT	570.95	570.38	571.63	571.84	567.72	572.08	572.27	569.76	571.57
1990	1064	573.71	576.65	NMT	575.50	575.41	574.95	NMT	573.03	572.98	565.36	574.30	576.57
1990	1080	567.98	568.72	NMT	568.72	564.65	568.64	NMT	568.37	568.69	567.36	NMT	569.46
1990	1081	575.63	563.32	NMT	576.00	577.49	576.13	576.07	575.79	575.71	577.05	575.75	NMT
1990	2068	519.49	520.14	NMT	522.23	522.74	523.68	523.02	522.66	521.59	521.59	521.85	521.85
1990	2106	520.57	521.75	522.81	523.05	524.29	523.65	523.20	522.32	521.84	522.66	522.35	522.62
1990	2385	NMT	NMT	NMT	NMT	524.11	519.57	523.73	523.07	522.22	522.46	522.73	522.83
1990	2397	NMT	NMT	NMT	NMT	NMT	NMT	NMT	522.61	521.93	521.99	521.99	522.21
1991	1025	571.37	566.77	NMT	NMT	NMT	570.50	571.58	571.89	NMT	572.11	572.19	571.59
1991	1032	NMT	NMT	NMT	NMT	NMT	NMT	NMT	NMT	NMT	559.11	559.10	559.49
1991	1064	579.80	579.37	579.57	NMT	NMT	575.18	NMT	573.24	NMT	NMT	NMT	NMT
1991	1080	569.21	568.91	NMT	NMT	NMT	565.70	564.22	NMT	NMT	NMT	NMT	NMT
1991	1081	NMT	NMT	NMT	NMT	NMT	576.54	NMT	NMT	NMT	NMT	NMT	NMT
1991	1907	NMT	NMT	NMT	NMT	NMT	NMT	DRY	NMT	NMT	NMT	NMT	NMT
1991	2068	524.12	524.08	524.14	NMT	NMT	523.41	521.98	520.74	NMT	519.36	518.68	517.85

See footnotes at end of table.

TABLE F-20A
(Continued)

Year	Well No.	January	February	March	April	May	June	July	August	September	October	November	December
MISCELLANEOUS GROUNDWATER ELEVATION (continued)													
1991	2106	524.05	522.99	524.35	NMT	NMT	523.34	NMT	521.21	520.90	NMT	NMT	NMT
1991	2385	524.71	524.10	524.73	NMT	524.34	NMT	522.45	521.71	521.28	520.40	519.74	519.00
1991	2397	524.46	524.38	524.26	NMT	NMT	523.38	521.97	521.20	520.62	519.79	519.08	518.27
1992	1025	572.19	568.27	NMT	NMT	NMT	570.89	565.54	572.03	572.39	571.88	571.64	571.29
1992	1032	561.02	559.05	559.09	559.50	NMT	560.49	561.05	559.17	559.46	560.17	560.88	559.16
1992	2068	517.60	517.60	517.44	517.56	NMT	517.29	518.63	519.52	519.07	518.71	518.68	519.37
1992	2385	518.98	519.05	518.89	519.23	NMT	519.20	NMT	519.91	519.87	519.47	519.49	520.25
1992	2397	517.99	518.07	517.95	518.18	NMT	518.63	518.91	NMT	519.33	519.01	519.00	519.63

[a]Feet above Mean Sea Level

[b]No measurement taken

TABLE F-20B

SOUTH FIELD
GROUNDWATER ELEVATION DATA[a], 1993
OPERABLE UNIT 2 REMEDIAL INVESTIGATION
FERNALD ENVIRONMENTAL MANAGEMENT PROJECT

Well No.	3/18/93	3/23/93	4/09/93	4/19/93	5/07/93	5/19/93	6/2/93	6/21/93	7/08/93	7/19/93	8/02/93	8/16/93
1014	525.02	NMT[b]	NMT	524.97	525.02	NMT	524.97	525.03	525.07	525.01	525.04	NMT
1046	573.62	574.33	573.07	574.12	572.12	571.85	570.44	569.63	568.21	567.09	566.19	565.46
1065	565.00	564.92	565.84	566.90	565.34	565.26	564.04	563.33	562.58	562.12	561.59	561.21
1433	560.07	560.21	560.05	NMT	559.97	558.63	558.49	558.39	558.23	558.07	557.92	557.54
1516	522.57	522.86	522.94	523.12	523.14	523.14	522.22	522.35	521.93	521.50	521.29	519.90
1517	522.61	522.91	523.03	523.15	NMT	523.14	522.23	522.41	521.91	521.57	521.36	521.10
1518	522.66	522.96	522.23	523.22	523.24	523.18	522.26	522.46	521.90	521.58	521.17	521.09
1941	NMT	NMT	NMT	NMT	574.60	574.53	NMT	572.82	571.81	570.73	569.13	567.99
1942	NMT	NMT	NMT	NMT	573.34	NMT	569.70	NMT	566.78	565.54	564.23	563.33
1954	NMT	NMT	NMT	NMT	NMT	NMT	NMT	NMT	563.18	562.74	562.43	562.08
2014	522.78	521.95	524.28	523.33	523.23	523.21	522.22	522.44	521.84	521.54	521.29	521.10
2046	522.21	522.38	522.89	522.92	523.18	523.17	522.59	521.49	521.15	521.81	521.68	521.28
2065	521.86	NMT	522.69	522.81	522.97	523.01	522.51	522.49	522.11	521.95	521.79	521.35
2385	521.83	522.03	522.45	522.54	NMT	522.77	NMT	NMT	NMT	NMT	NMT	NMT
2401	522.94	523.30	523.63	523.68	523.89	523.90	523.22	523.14	522.76	522.30	522.19	521.79
2943	NMT	NMT	NMT	NMT	523.13	NMT	522.40	NMT	522.02	521.64	521.57	521.17
2944	NMT	NMT	NMT	NMT	NMT	NMT	NMT	NMT	522.31	521.95	521.83	521.45
2945	NMT	NMT	NMT	NMT	523.71	523.73	522.93	522.91	522.47	522.05	521.91	521.53
2954	NMT	NMT	NMT	NMT	NMT	NMT	NMT	NMT	522.30	521.92	521.80	520.41

See footnotes at end of table.

1318

5174

5174

TABLE F-20B
(Continued)

Well No.	3/18/93	3/23/93	4/09/93	4/19/93	5/07/93	5/19/93	6/2/93	6/21/93	7/08/93	7/19/93	8/02/93	8/16/93
11032	NMT	NMT	NMT	NMT	NMT	NMT	NMT	NMT	572.20	NMT	570.15	569.40
11085	NMT	NMT	NMT	NMT	NMT	NMT	573.40	573.33	572.54	571.99	571.15	570.77

[a]Feet above Mean Sea Level

[b]No measurement taken

1319

☆ U.S. GOVERNMENT PRINTING OFFICE: 1994-550-232/80175