U-006-301.21

5345

OPERATIONAL SAFETY REQUIREMENTS FOR THE SAMPLING AND ANALYSIS OF THE MATERIALS IN K-65 SILOS 1 AND 2

09/05/90

WMCO:R:AEC:90-0032
DOE-FN
48
REPORT
OU4

WMCO:R:AEC:90-0032

OPERATIONAL SAFETY REQUIREMENTS FOR THE SAMPLING AND ANALYSIS OF THE MATERIALS IN K-65 SILOS 1 AND 2

September 5, 1990

NOTICE

This report was prepared as an account of work sponsored by an agency of the United States Government. Neither the United States Government nor any agency thereof, nor any of their employees nor any of its contractors, subcontractors nor their employees, makes any warranty, expressed or implied, or assumes any usefulness of any information, apparatus, product, or process disclosed, or represents that its use would not infringe privately owned rights. Reference herein to any specific commercial product, process, or service by trade name, trademark, manufacturer, or otherwise, does not necessarily constitute or imply its endorsement, recommendation, or favoring by the United States Government or any agency thereof. The views and opinions of authors expressed herein do not necessarily reflect those of the Unites States Government or any agency thereof.

WMCO:R:AEC:90-0032

OPERATIONAL SAFETY REQUIREMENTS

FOR THE

SAMPLING AND ANALYSIS OF THE MATERIALS

IN K-65 SILOS 1 AND 2

September, 1990

FEED MATERIALS PRODUCTION CENTER
Westinghouse Materials Company of Ohio
P. O. Box 398704
Cincinnati, Ohio 45239-8704

Prepared for:
U. S. Department of Energy
Oak Ridge Operations Office
Contract DE-AC05-86R21600

Approved:

S. W. Coyle, Manager,
Environmental Management

for C. T. Beckett, Chairperson
WMCO Independent Safety Review
Committee

for J. J. Volpe, Vice President
Industrial, Radiological Safety
and Training

G. W. Westerbeck, FMPC Site Manager
U.S. Department of Energy

J. D. Wood, Project Director
ASI

Page
Intentionally Left Blank

- 5345

0 04

TABLE OF CONTENTS

		Page
1.	Safety Limits and Limiting Safety System Setting---	7
2.	Limiting Conditions for Operation----------	7
3.	Surveillance Requirements----------	9
4.	Design Features----------	10
5.	Administrative Requirements----------	11
5.1	Administrative Controls----------	11
5.2	Minimum Staff Requirements for Safety----------	11
5.3	Training----------	11
5.4	Review and Audit Requirements----------	11
5.5	Recordkeeping and Reporting Requirements----------	11
5.6	Administrative Action in the Event of OSR Violation	12

Page
Intentionally Left Blank

5945

0 06

OPERATIONAL SAFETY REQUIREMENTS (OSR)

Resampling and Analysis of the Materials in K-65 Silos 1 and 2

The K-65 Resampling and Analysis is to be performed by International Technology Corporation (IT) acting under a contract with the Department of Energy (DOE). Westinghouse Materials Company of Ohio (WMCO), the Operating Contractor of the Feed Materials Production Center (FMPC) is not responsible for the resampling operations, however, the K-65 area facility ownership and the operation of the Radon Treatment System in support of the resampling is within the realm of WMCO. The requirements outlined in this document are notated as being the responsibilities of IT or WMCO or both. This OSR , when approved, shall replace the previous K-65 Sampling OSR, WMCO:SR(IA):88-0518 prepared in September, 1988.

1. Safety Limits and Limiting Safety System Setting

1.1 Individual Dose Limits shall not exceed the DOE individual dose limit of 5.0 Rem per year or the site individual dose limit of 3.0 Rem per year. Individual exposure shall be determined from Self Reading Pocket Dosimeters (SRPD) and Thermoluminescent Dosimeters (TLD) to be worn at the K-65 area and the individual historical files of exposure. (IT/WMCO)

1.2 Access to the Radon Treatment System (RTS) shall not be allowed under any circumstances for eight (8) days after the last operation of this system except where the RTS is operated for maintenance activities where the maximum potential radon inventory available for trapping is less than 25% of the radon available for dome pumpdown and approved by Radiological Safety or the Radiation Safety Technician (RST) Supervisor. Access to the Radon Treatment System shall be restricted for thirty (30) days after the last operation. Access to this equipment after the eighth day and through the thirtieth day or for entry under the exception stated above shall be by issuance of a Radiation Work Permit (RWP) by an RST or RST Supervisor. (WMCO)

The thirty (30) day access restriction to the radon reduction equipment is to prevent operator exposure to direct gamma radiation from the radon and radon daughters trapped upon the activated charcoal filters. Thirty (30) days is approximately seven half lives of radon-222 which will reduce the initial radon and radon daughter inventory to approximately 0.8%. The eight day complete non-access period is about two radon-222 half lives and will reduce this initial radon inventory to 25%, however, this access will be under the authority of a special RWP with restrictions specific to that permit.

2. Limiting Conditions for Operation

2.1 The K-65 Radon Treatment System shall be operated to reduce the total Radon inventory in the silo head spaces prior to the removal of the manhole covers in preparation to K-65 sample taking. The

Radon Treatment System shall be operated until the surface radiation at the silo dome is less than 75 mR/hr. When the surface radiation climbs to 100 mR/hr during repackaging due to the evolution of the radon from the residue, the sampling operations are to be suspended and the Radon Treatment System reactivated. **(WMCO)**

To assure that the target radon reduction in the K-65 silos is achieved during operation of the Radon Treatment System at least two calibrated gamma specific radiation meters reading in units of mR/hr shall be placed on the silo surface. These instruments will be continuously monitored during system operation. **(WMCO)**

To assure that the surface radiation on the K-65 silo surfaces never exceeds the maximum allowable surface radiation, at least two gamma specific radiation meters reading in units of mR/hr shall be available for monitoring of the silo surface during sampling operations. These instruments shall be monitored at least every two hours during sampling operations, and the monitoring shall be recorded in the sampling supervisors logbook. **(IT/WMCO)**

The 4600 Curies of radium in the K-65 silo residue, continuously generate radon gas. The normal equilibrium quantity of radon gas in the head spaces is about 39.6 Curies. This inventory of radon gas results in direct gamma radiation at the surface of the domes from radon and decay daughters. Moreover, the K-65 silos are not containment structures and radon gas has some access to the ambient atmosphere. Therefore, sampling operators on the K-65 silo without externally supplied air sources (airline or SCBA) and without operation of the Radon Treatment System will be exposed to high gamma radiation and high concentration of airborne radon gas. Operation of the Radon Treatment System will reduce the radon inventory in the silo head spaces during this operation to less than 4 Curies (equivalent to a radiation of 75 mR/hr at the silo surface). The radon reduction in the dome head space is effective in reducing direct gamma exposure from the silo radon inventory and the radon gas concentration in the ambient atmosphere above the silos.

2.2 Operators on the surface of the K-65 Silos shall wear airline supplied or SCBA full face respiratory protection and anti-contamination clothing. **(IT/WMCO)**

Airline supplied or SCBA full face respiratory protection is required for operator protection while working on top the silo domes. This protection is from residual radon and decay daughters remaining in the silo head spaces after operation of the Radon Treatment System. Although the bag-in/bag-out procedures maintain isolation of the head space from the atmosphere, some exchange of limited amounts of silo gas will occur when removing materials from these bags. Maintenance of operator protection and prevention of operator inhalation of this radon enriched gas is provided by the use of airline or SCBA respiratory protection. Anti-contamination

clothing is used at the FMPC whenever any potential contaminated surfaces can be encountered. (IT)

2.3 The weight of personnel and equipment on the surface of the silos at a manhole shall be limited to 700 pounds. The maximum number of personnel on the silo dome shall be limited to three. (IT)

The concentrated live load limit on the silos prevents excessive live loading on the silo domes near the manhole.

2.4 At least two operable gamma specific radiation detectors shall be used to monitor silo surface radiation during sampling. In the event of failure of either detector, sampling will be terminated until two operable detectors are available. (WMCO)

2.5 Due to temperature limitations on PVC, the RTS piping material, operation of the RTS shall only occur when the ambient temperature is above 0°F. (WMCO)

2.6 Due to the temperature limitations on the polyethylene bags used for the bag-in bag-out operations during sampling, sampling shall only occur when the ambient temperature is above freezing, 32°F. (IT)

2.7 The RTS area shall be monitored by at least two operable instrument to detect radon concentration with a relatively short sample dead time (<20 minutes). Appropriate respiratory protection shall be used based upon this detected radon WL. The appropriate respiratory protection is: 0 to 0.075 WL, no respiratory protection required; 0.075 to 16.5 WL, full face air purifying respirator; 16.5 to 600 WL, full face supplied-air respirator; >600 WL, SCBA required. If radon WL are above >600 WL the RTS shall not be operated, and the RTS area evacuated. If the radon monitors indicates a sudden increase in radon WL, the RTS is to be shut down and isolated from the K-65 Silos.

3. Surveillance Requirements

3.1 Individual Self Reading Pocket Dosimeters (SRPDs) are to be worn by all individuals involved with the silo resampling and RTS operation.

3.1.1 The SRPDs are to be read every two hours and zeroed daily. (IT/WMCO)

3.1.2 The gamma radiation exposure indicated by the end of day reading of the SRPD for an individual is to be recorded. (IT/WMCO)

3.1.3 The cumulative radiation exposure record for all individuals as indicated by the SRPD is to be compiled for a annual, quarterly, monthly, and weekly basis. (WMCO)

3.2 Individual Thermolumenecent Dosimetry (TLD) Badges are normally to be analyzed monthly unless the SRPD indicates that an individual's exposure is approaching the radiation exposure threshold (80% of exposure guidelines listed in the Radiation Control Manual). In this event a special reading of the TLD will be performed as a confirmation of the radiation exposure indicated by the SRPD. (WMCO)

3.3 Prior to operation of the Radon Treatment System an inspection of the concrete block shielding around the system shall be performed to assure continuity of the shielding wall. Immediately prior to the operation of this system a visual inspection and an alpha frisking of RTS piping joints and connections of the piping to and from the silos and the Radon Treatment System is required to assure continuity of this piping. The operation of valves contained by this shielding using the remote actuation rods shall also be performed to assure operability of the Radon Treatment System. (WMCO)

3.4 Whenever the Radon Treatment System is operated, the date, time, and duration of system operation shall be recorded. (WMCO)

3.5 The minimum of two gamma specific radiation detectors used for continuous monitoring of the radiation at the silo surface during the operation of the Radon Treatment System and for bihourly monitoring of the radiation at the silo surface during all sampling operations shall have gamma specific instruments with an up-to-date calibration and have a traceable calibration scale check that is not more than one month (30 days) old at the start of the K-65 Silo sampling. (WMCO)

3.6 All personnel involved with the K-65 silos during any operation in the waste pit area based upon the best available local radon monitor shall wear appropriate respiratory protection. Personnel shall be medically approved to use respirators, be respirator trained, and be respirator fit-tested in the last 12 months. Personnel shall be issued appropriate respirators at the start of each shift. (IT/WMCO)

3.7 The local working level shall be monitored by instruments and a Radiation Technician on a semi-continuous basis (<20 minutes) with appropriate respiratory protection including system shutdown and area evacuation to minimize the local worker radiation uptake/exposure. (WMCO)

4. Design Features

The shielding on the metal shed of the Radon Treatment System is a passive system to reduce the direct gamma exposure of the trapped radon and radon daughters. This shielding consists of a stacked, solid concrete stretcher blocks (32 inches thick) with remote valve actuation rods extending through the shielding wall. (WMCO)

5. Administrative Requirements

5.1 Administrative Controls - Administrative controls for the facility are to 1), restrict operator exposure using TLDs and SRPDs to monitor individual whole body doses, 2) require operation of the Radon Treatment System to reduce the radon inventory in the K-65 silos, and 3) restrict personnel access to the K-65 fenced area. Neither of these requirements are controlled by a measuring instrument connected to an automatic mitigating control system, so human intervention is required and, therefore, the monitoring actions and mitigating response is an administrative control. (IT/WMCO)

5.2 Minimum Staff requirements for safety - The minimum number of personnel for the sample taking from the silos is six (6); consisting of one (1) crane spotters; one (1) crane operator; two (2) sample technicians; one (1) supervisor; one (1) Radiation Safety Technician. The sampling operation, once the sample core is removed from the silo, requires three (3) personnel; consisting of one (1) truckdriver; two (2) sample technicians. (IT)

The minimum number of personnel for the operation of the RTS is two; consisting of one RTS system operator and one RST to monitor the WL monitors and the gamma radiation on the surface of the silo domes. (WMCO)

5.3 Training - All personnel will be required to attend and be qualified in WMCO Radiation Worker Training, OSHA job requirement training (1910.120), and Hazardous Material Handling Training. In addition, job specific training is also required. (IT/WMCO)

5.4 Review and audit requirements - This OSR shall require Independent Safety Review Committee (ISRC) approval and will be subject to periodic field compliance audits by WMCO IRS&T and surveillance by IT Quality Assurance.

Changes which may affect the design features, safety limits, or limiting conditions for safety are required to be fully reviewed by WMCO management and the WMCO ISRC prior to implementation. (WMCO)

Final review and approval of the OSR is accomplished by project line management, followed by recommendation for approval by the WMCO ISRC, with final approval by the DOE site manager. (IT/WMCO)

5.5 Recordkeeping and reporting requirements - Safety related records and logs will be prepared in regard to the following items. These records and logs will be kept for a minimum of five years past the termination of the subcontract. (IT/WMCO)

- o Tests and maintenance of the instrumentation monitoring the operator exposure and the Radon Treatment System equipment;

- Training logs for personnel;
- Violations of safety limits, limiting conditions of operation, or administrative controls;
- Any incidents and investigations associated with safety limit, limiting conditions for operation, administrative controls, or other OSR violations.

5.6 Administrative action in the event of OSR violation - OSR violations and other DOE reportable events will be reported in accordance with FMPC-703, "Unusual Occurrence Reporting" and FMPC-704, "Minor Event Reporting System". In the event of a sampling incident the IT resampling supervisor will report the incident to the IT Project Manager. The IT Project Manager shall report the incident to DOE in accordance with FMPC-713. The IT Project Manager is responsible to ensure the implementation of these reporting procedures by the functional groups under his purview, i.e. the sampling team and any sub-tier contractors. In the event of a RTS operation incident, WMCO will be responsible for reporting the incident to DOE in accordance with FMPC-713. Depending upon the severity of the consequence of the incident, DOE shall have the final authority to approve or disapprove the sampling or RTS restart. In the event of minor consequence incident, authority to restart sampling or the RTS is the responsibility of IT and WMCO respectively. (IT/WMCO)

FEED MATERIALS PRODUCTION CENTER
Westinghouse Materials Company of Ohio
P. O. Box 398704
Cincinnati, Ohio 45239-8704

SAFETY ASSESSMENT FOR
SAMPLING AND ANALYSIS OF THE MATERIALS IN THE K-65 SILOS (1 & 2)
WMCO:IRS&T(NS):90-1028
FEED MATERIALS PRODUCTION CENTER
FERNALD, OHIO

September 4, 1990

APPROVALS:

WESTINGHOUSE MATERIALS COMPANY OF OHIO

for J. J. Volpe, Vice President — Date: 9/18/90
Industrial, Radiological Safety and Training

S. W. Coyle, Manager — Date: 9/19/90
Environmental Management

for C. T. Beckett, Chairperson — Date: 9/28/90
WMCO Independent Safety Review Committee

ADVANCED SCIENCES, INC.

J. D. Wood, Project Director — Date: 9/17/90

DEPARTMENT OF ENERGY APPROVAL:

G. W. Westerbeck, FMPC Site Manager — Date: 10/5/90
U. S. Department of Energy

WMCO-FMPC SAFETY ASSESSMENT

September 4, 1990

TITLE OF PROJECT OR SUBPROJECT: SAMPLING AND ANALYSIS OF THE MATERIALS IN THE K-65 SILOS (1 AND 2)

1. BUILDING AND LOCATION WITHIN BUILDING: The K-65 Silos (1 and 2) are located west of the production area within the perimeter fence as shown in Attachment 1.

2. FACILITY: New_____ Existing__X__ Modification_____

3. BRIEF DESCRIPTION OF OPERATION:

Existing Process/Conditions:

The K-65 Silos (1 and 2) are used for the storage of radium-bearing residues from pitchblende processing. These materials have been stored here since the early fifties. The sources of the residue included slurry residues from FMPC processes, 25,000 drums of residues from St. Louis, and 6,000 drums of residues from Niagara Falls processing facilities. The FMPC slurry was reported to contain about 311 mg radium per ton. The St. Louis and the Niagara Falls drums were reported to contain about 500 mg and 624 mg radium per ton respectively. These silos also received some soil excavated from a drum-handling area east of and adjacent to Silo 3. These results indicate that Silos 1 and 2 may contain as much as 4.6 Kg (4,600 Ci) of radium-226 total. Silos 1 and 2 also contain a total of 11,200 Kg of uranium. The radon concentration within the silo head space is about $3x10^7$ pCi/l. In 1970, grab samples from the surface of the residue were taken. The results of this previous sampling of the K-65 Silos are presented in Attachment 2. The present sampling is required to determine the chemical and radiological contents of the silos for EPA requirements and to develop an eventual remediation plan for the silos and contents.

Exterior deterioration of the K-65 Silos resulted in application of an asphaltic sealant to the external walls and an earthen embankment to counterbalance internal loading on the silo walls and to apply shielding to the immediate area in an attempt to reduce direct gamma radiation (1964). A 1985 study of these silos concluded that the walls and base slab have a life expectancy of 5 to 10 years. This study also concluded that the silo domed roof was in an advanced state of degradation, and the 20-foot diameter center section was incapable of structurally supporting any live load (including potential snow loads), and that there was no life expectancy for this section of the roof, e.g. collapse of this section of the silo dome could occur at any time. The 1985 study concluded that the remainder of the silo domed roof outside the

critical twenty foot diameter section, like the walls, had an expected additional life of 5 to 10 years and was capable of supporting a 50 pound per square foot (PSF) live load. In 1990 a Bechtel structural analysis of the K-65 Silo domes specified a maximum dome live load of 700 pounds concentrated around a manhole.

Prior to the Bechtel study, interim stabilization projects had been implemented. The center section of the K-65 Silo dome roofs were covered with a thirty-foot diameter plywood cap to provide weather protection and to provide secondary containment in the event of collapse of the critical roof section, and a Radon Treatment System (RTS) using activated carbon was installed to reduce radon levels in the silos (and direct gamma exposure) during recent and future remediation activities on the silos. The exterior exposed surfaces of the silos including the plywood cap over the center dome section have also been coated with a rigid polyurethane. The foam layer has provided weather protection to prevent further environmental degradation of the dome roof, insulation to reduce diurnal temperature fluctuations inside the silos, and reduce the radon emission from the silo. In 1988 a remotely operated video tape camera was introduced into the K-65 silos to observe the visual condition of the residue and the interior surface of the silo dome roofs. This remote inspection indicated that spalling of the concrete surface assumed in the 1985 study had not occurred, and indicates that the structural live load limit of 50 PSF is conservative. Therefore, based upon that available data, the outer section of the K-65 silo dome roofs is structurally sound. However, a Bechtel analysis of the dome in 1990 specified that the maximum safe live load on the silo domes concentrated around a single manhole is 700 pounds. A typical cross section of the K-65 Silos (1 and 2) is presented in Attachment 3.

Proposed Process/Conditions:

A. Sampling Requirements/Justification

The K-65 Silos (1 and 2) must be sampled to adequately characterize the radiological and chemical composition of the materials in these silos. The present sampling is required to determine the chemical and radiological contents of the silos for EPA requirements and to develop an eventual remediation plan for long term disposition of the contained materials. The object of the sampling is to quantify the mean concentration of each contaminant and determine the spatial variability of these contaminants within each silo matrix.

The recommended number of samples to be taken from the silos is a function of the spatial variability and the nearness of the mean leachate concentrations to the EPA threshold limit values. The spatial variability is considered in all directions; however, due to the cylindrical geometry of the silos and the top center location used in silo loading, the horizontal variability is expected to be relatively small. Therefore, the spatial variability is expected to only exist in

the vertical direction, which, due to the loading, is directly related to the changes in the concentrations over time.

Available data for the preliminary evaluation of the vertical variability is based upon laboratory analysis on samples of materials believed to be collected between 1955 and 1958 from the transfer line of the K-65 Silos.

The available sample analysis data, data from analysis based upon the environmental threshold limit values, and EPA Sampling Method SW-846, (Test Methods for Evaluating Solid Waste) statistically indicate that only two samples from each core are required to be analyzed to satisfy the statistical objectives. This small number of required samples is attributable to the small standard deviation in the available silo feed data, which indicated a small variability in the materials over the three year loading time. It is recognized, however, that the available data may not be representative of the entire silo conditions and that layers of non-homogeneity can be expected. Therefore, the limited sampling, as indicated by the statistical methods, and the inherent assumptions necessary for this analysis will be supplemented by additional sampling.

The samples are prepared after the cores are placed in the inspection trailer, by cutting the cores into 18-inch section lengths along the entire core. Each core will provide approximately thirteen 18-inch sections.

A.1 K-65 Silo (1 and 2)

K-65 Silos 1 and 2 will each have four core samples taken. Three of the four cores will be sampled for radiological, chemical, and geotechnical analysis in addition to treatability testing. The fourth core will be archived.

Sub samples are obtained by cutting the cores into 18-inch lengths after the core sample is placed in the inspection trailer. The sub samples from each core will be taken the full length of each 18-inch core section using a smaller (18-inch) core sampler. The selection of sub samples from the cores is determined from the visual characteristics of the cores and the 18-inch core sections.

If variegation of the core sample is visibly observed as indicated in procedure DWP-002 the core sub samples from each core section will be selected in a visibly biased fashion. Three of the sub samples will be selected from core sections exhibiting the greatest visible variability. The fourth sub sample will be selected from the core section with the greatest radiological reading determined by a scan of the entire length of the core.

If the core is visibly uniform, three sub samples will be taken from the top, middle, and bottom sections of each core. The fourth core sub sample will be from the core section with the highest radiological reading.

A.2 Silo 4

Silo 4 is empty; however, a core sample taking will be used for training purposes. A single simulated core sample of this silo will be performed as a training exercise for personnel involved with this procedure.

A.3 Additional Sample Requirements

Following sectioning of the sample cores, three of the four sample cores from each silo will be subsampled to yield twelve subsamples for radiological and chemical analysis, three subsample for geotechnical analysis, and one subsample for treatability testing. The fourth core will be archived. The total number of subsamples from both silos is 32.

The chemical and radiological analysis will consist of Hazardous Substance List (HSL) inorganics, HSL organics (volitles, semi-volitles, PCBs, pesticides, tributylphosphates), Toxicity Characteristic Leaching Procedure (TCLP) metals, isotopes (U-235, Th-230, Ra-226), Pb-210, gamma spectroscopy, and total uranium. The geotechnical tests will consist of water content, determination of Atterburg limits, specific gravity, grain size, one-dimensional consolidation, triaxials, standard and modified proctors, and density determination.

B. Core Sampling Procedure

Detailed operational procedures for the Silo Sampling have been prepared. The actual procedures are presented or referenced in Section B.2.

B.1 Operating Restrictions and Constraints

The advanced degradation of the 20-foot diameter center section of the K-65 Silos 1 and 2 resulted in the installation of a 30-foot diameter reinforcing plywood cap. A manhole exists at the center of each silo within the critical 20-foot diameter section, however, at the K-65 Silos it was determined that sampling activity at this manhole could result in excess risk of containment failure and material release due to partial dome collapse. Therefore, all silo sampling is to be performed from the four manholes outside the 20-foot diameter section. All sampling activities are to proceed with caution to avoid sudden concussion or vibration that may result in the collapse of this center section of the K-65 Silos.

The remainder of the silo dome has severe environmental degradation and the total live dome loading limit around a manhole is specified at 700 pounds. There is also a possibility of embrittlement of the steel reinforcing resulting in an unknown point loading limit. Therefore it is possible that a sampling operator can exceed a local point load, and punch through the dome. As a result anchored nets will be installed over the dome to prevent an operator from falling into the residue in the event of punch through. The weight of the nets is distributed over a large area (20 feet by 30 feet) and is not to be included into the dome concentrated live load limit of 700 pounds.

Other operator restrictions required for the sampling project including operation of the RTS are:

(a) the limitation of personnel exposure (implementation of ALARA, radiation monitoring, personnel exposure recordkeeping, and training);

(b) required safety equipment (airline or SCBA full face respirators, safety glasses, eyewashes and showers);

(c) Limiting the number of sampling personnel on the roof of a K-65 silo to three (700 pound concentrated live load limit);

(d) contamination control (clothing, change out procedures, sampling procedures, etc.), equipment requirements and specifications;

(e) job specific training requirements.

B.1.1 Vibration and Concussion (Worst Case-partial dome collapse)

A partial dome collapse of a K-65 Silo is considered to be the worst case accident identified with the sampling program. This accident consequence was evaluated using both cases with and without the plywood cap emplaced. The partial dome collapse with the plywood cap emplaced was also identified with the punch through accident scenario.

These accident consequences were analyzed using the AIRDOSE computer code and were originally performed for the K-65 Silo Structural Remediation project prior to the installation of the dome sealant and the urethane insulation layer. The three targeted individuals for the postulated accident consequences were:

(1) the nearest offsite individual (Fenceline 500m SW of silo);
(2) typical onsite individual (730m E of silo);
(3) nearest offsite individual in most probable wind direction (Fenceline 1300m NNW of silo).

B.1.1.1 Consequence of K-65 Silo Partial Dome Collapse with Dome Cap in Place

The consequence of K-65 Silo partial dome collapse with the dome cap in place would represent no net change from condition prior to the sealing and insulation of the domes with polyurethane; i.e., the dome roofs are cracked and have free interchange with the atmosphere. This condition releases approximately 660 Ci of ^{222}Rn per year. At the minimum offsite personnel distance the radon and decay daughter air concentration is 2.36×10^{-4} Working Level (WL see B.1.2.3). The effective annual dose equivalent dose to this individual is about 20mRem (24 hr/d, 7d/wk, 52wk/yr, wind in this direction 5% of the time). At the typical onsite individual distance the radon and decay daughter air concentration is 3.7×10^{-4} WL. The effective annual dose equivalent dose to this individual is about 5.7 mRem (40 hr/wk, 50 wk/yr). At the most probable offsite individual distance the radon and decay daughter air concentration is 4.3×10^{-4} WL. The effective annual dose equivalent dose to this individual is about 36.5 mRem (24 hr/da, 7 da/wk, 52 wk/yr, wind in this direction 12.3% of the time). If an individual both worked and lived in the vicinity of the plant, the potential worst case exposure would be cumulative, and not exceeding 42.2 mRem per year.

B.1.1.2 Consequence of K-65 Silo Partial Dome Collapse with Dome Cap Removed

The consequence of partial dome collapse without the dome cap in place would expose the surface of one quarter of the silo sludges of one silo directly to the environment. This condition would release approximately 1300 Ci of ^{222}Rn per year. At the minimum offsite personnel distance, the radon and decay daughter air concentration is 6.35×10^{-4} WL. The effective annual dose equivalent dose to this individual is about 53.7 mRem (24 hr/d, 7d/wk, 52wk/yr, wind in this direction 5% of the time). The typical onsite individual radon and decay daughter air concentration is 9.75×10^{-4} WL. The effective annual dose equivalent dose to this individual is about 18.9 Mrem (40 hr/wk, 50 wk/yr). At the most probable offsite individual distance the radon and decay daughter air concentration is 1.08×10^{-3} WL. The effective annual dose equivalent dose to this individual is about 91.8 mRem (24 hr/da, 7 da/wk, 52 wk/yr, wind in this direction 12.3% of the time). If an individual both worked and lived in the vicinity of the plant, the potential worst case exposure would be cumulative, and not exceeding 110.7 mRem per year.

B.1.2 Operator Radiation Exposure

Operator requirements for radiation exposure are twofold. First, an ALARA (As Low As Reasonable Achievable) plan was prepared for this job. This ALARA plan estimated the individual exposure of each individual involved with the task execution. The plan then restricted exposure either by the use of remote operations, limiting exposure time, or the use of shielding. Second, a plan was prepared to determine what

individual operator radiation monitoring was necessary to measure compliance with the ALARA goals. This monitoring plan determined the need for monitoring criteria, instruments, and recordkeeping for each individual.

B.1.2.1 Exposure Limits

The Radiation Control Manual limits individual radiation exposure to meet the DOE limit of 5.0 Rem per year whole body by setting WMCO exposure limit of 3.0 Rem per year whole body. This WMCO exposure limit is well under the DOE maximum annual whole body limit of 5 Rem.

B.1.2.1.1 TLD Badge Requirement

A TLD (ThermoLuminescent Dosimeter) Badge is to be worn by all personnel in contaminated or processing areas. These badges are issued individually to all FMPC personnel (WMCO employees, contractors, subcontractors, etc.). These TLD Badges are routinely measured monthly by trained WMCO personnel using specialized evaluation equipment. Use of the TLD Badge is required for personnel entry to a processing or contaminated areas. An additional, unique TLD badge and a TLD ring for extremity doses will be issued to all personnel involved with the K-65 sampling. These TLDs will be used in addition to other personal monitoring.

B.1.2.1.2 Self Reading Pocket Dosimeters (SRPD) Requirement

SRPD (Self Reading Pocket Dosimeters) are gamma-specific radiation monitoring instruments that can be instantly evaluated by the wearer for cumulative gamma exposure. Although the SRPDs indicate mR of gamma radiation exposure, the quality factor of gamma radiation is unity. Therefore, one R of gamma exposure is equivalent to one Rem.

The weekly gamma exposure can be readily determined by issuing a zeroed SRPD to each individual at the beginning of each day. Reading of the individual SRPDs will be performed every two hours and recorded at the end of each day.

B.1.2.1.3 Individual Exposure Monitoring With SRPDs and TLDs

If the SRPD records indicate that an individual is approaching a Radiation Control Manual exposure control (300 mRem/week or 2.4 Rem/quarter, whole body penetrating), all TLDs will be read to confirm individual exposure. The SRPD reading that requires this special TLD reading is 80% of exposure control (240 mRem/week or 1.92 Rem/quarter, whole body penetrating).

B.1.2.2 Personnel Radiation Limit

The DOE has specified an annual maximum individual radiation exposure of 5.0 Rem. The WMCO FMPC site limit is 3 Rem per year.

B.1.2.2.1 Personnel Exposure History Requirement - 5345

To assure that the DOE mandated 5.0 Rem per year limit is not exceeded, all individuals involved with this operation will be required to provide personal radiation exposure history for the previous quarter. An ongoing history file will be created for each individual to track the individual exposure during job execution to assure that this limit will not be exceeded.

B.1.2.2.2 Monitoring Requirement (B.1.2.1.1 and B.1.2.1.2)

The individual radiation monitoring equipment described in the listed sections will be used to track the job specific individual exposure.

B.1.2.3 Area Air Contamination Limit

Air monitors are required at the work site due to the presence of radon gas and radon decay daughters in the K-65 Silos emanating from the radium decay. Radon exposure is expressed in terms of Working Levels (WL). One WL of radon exposure is presently defined as any combination of short lived radon daughters that will result in the emission of 1.3×10^5 Mev of potential alpha energy in one liter of air. An older, but still used, definition of working level is 100 pCi of Rn^{222} in 100% equilibrium with decay daughters in one liter of air. The limit for radon exposure is 1/3 WL, and respirators will be worn when the radon air concentration is above 0.075 WL.

B.1.2.3.1 Air Sampler(s) Requirement

Working Level monitors, grab samples, Pylon detectors, and/or other radon gas/ decay daughter monitors will be used to determine the radon WL's at various locations at the work site and along the RTS piping. In addition, environmental radon monitoring cups are available for interpretation of radon levels in the K-65 silos areas. However, these radon cups are primarily for environmental monitoring and are read only quarterly.

The instruments and monitors used for determination of WL at the work site are the method of detecting leaks of radon from the RTS. The release of radon from the RTS piping does not affect the nominal bulk release of radon from the K-65 silos, or, consequently, affect the off-site or distant on-site consequence of this release. The local WL instruments are placed in areas where radon gas released from the RTS piping is known to accumulate, e.g. the area between the RTS shed and the silo berm, and in areas that are most likely to require operator presence. To assure that an operating WL monitor is available, at least two of these instruments will be used for monitoring. Monitoring the local working level monitoring instruments (Pylons) by the Radiation Technician on a semi-continuous basis (machine sampling time, 15-minutes) with appropriate respiratory protection (filtering, air-line supplied, or system shutdown and area evacuation) will minimize the local worker radiation uptake/exposure. The local WL instruments are primarily to comply with the ALARA principal and will not mitigate the

off-site or far on-site consequence of a release of radon from the RTS piping.

B.1.2.3.2 Radon Treatment System (RTS) Operation (B.1.4)

A RTS is installed to treat the air in the K-65 silo head spaces. This RTS takes gases from the head space of the silos and passes it through an activated charcoal filter. The charcoal adsorbs the radon gas. Operation of the RTS prior to execution of the sampling procedure reduces direct radiation exposure to operators working atop the silos. The RTS and the system operation is described in Section B.1.4.

B.1.3 Sampling Equipment Description and Operation

B.1.3.1 Sampling Core Mechanism

The silo core sampler, commonly known as a "Vibra-Corer", is a hollow steel tube approximately 40-feet in length containing a 4-inch diameter transparent "Lexan" sample tube. It is equipped with a vibrator at the top to facilitate filling the tube core with the desired sample. The top is equipped with a fixture for connection to a crane hook, a dynamometer and/or a load cell. The "Vibra-Corer" will be decontaminated once the "Lexan" sample tube is removed to prevent sample cross contamination. It will then be fitted with an empty "Lexan" sample tube, and reused.

B.1.3.2 Plastic Bags and Ancillary Bag Equipment

Plastic bags and ancillary equipment will be used for all bag-in/bag-out operations when removing or installing manhole covers, inserting the empty "Vibra-Corer" Sampler into the silos or removing the filled sampler from the silo. The plastic bags are special purpose polyethylene. Each bag is dimensioned to allow for bag-in/bag-out procedures for the equipment contained; i.e., the "Vibra-Corer" bags are of a larger diameter than the corer and longer than the length of the corer. Ancillary equipment for the bag-in/bag-out operations consist of rubber gloves, tape, epoxy resins (glue), knives (for bag slitting), and necessary hand tools such as wrenches, pliers, etc. The procedures for sampling operations include response to bag breeches that may be encountered during sampling operations. The plastic bags have an effective useful lower temperature limit of 32°F.

B.1.3.3 Core Sampling Transport and Implementation

B.1.3.3.1 Crane

The crane is used for suspending and transporting the "Vibra-Corer" in the vertical position. The crane will be used to insert the sampler into the silos through the manholes and to move the sample tubes to and from the laydown area. The crane will not be moved when transporting the "Vibra-Corer" to and from the laydown area from the silos. The crane to be used in this project is a 165-ton capacity 255-foot boom crane. The crane vendor will be required to provide all crane OSHA and

ANSI certification and a record of preventive maintenance. The overspecification of a 160-ton crane for the approximate 250 pound vibra-corer sample apparatus, the crane ACI certification, the crane operator and spotter certification, and the operation involved makes a crane failure a very low probability. The consequence of this failure is the same as discussed as B.1.1.2. A sketch of the crane and its position when sampling the silos is shown in Attachment 5.

B.1.3.3.2 Truck

A specially prepared flatbed truck will be used for the transportation of the full "Vibra-Corer" sample tubes from the laydown area to the inspection and sampling trailer. The truck bed and the floor of the inspection and sampling trailer are the same elevation.

B.1.3.4 Sample Collection and Analysis (Inspection and Sampling Trailer)

The inspection and sampling trailer is an enclosed 45-foot long box, equipped with access doors on one end and a HEPA filter exhaust. The trailer will be located away from the silos in an area of relatively low background radiation to increase the sensitivity of the radiation-measuring devices used. Temporary power will be required at the trailer location. A map showing the proposed inspection and sampling trailer location is shown as Attachment 6. The filtration exhaust will be continuously monitored for radioactive particulates and gaseous materials. The HEPA filter will be DOP tested prior to the start of sampling and every six months thereafter, as long as the sampling project lasts. The HEPA filter will have to be within its scheduled six-month DOP test.

B.1.3.4.1 Protection Systems

B.1.3.4.1.1 Public and Environment

The public and the environment are afforded several protection systems that will contain any particulate or airborne radioactive contamination. These protection systems are the use of polyethylene bags in the bag-in/bag-out procedures when inserting/installing and removing the sample "Vibra-Corer" and manhole covers from the silos, the plastic bag used for containment of the samples, the sealed sample containers, and disposal procedures for the spent samples. A HEPA filtered vacuum cleaner will be used to clean up any core sample spills inside the sampling trailer, and a HEPA filtered exhaust on the sampling trailer will be used to trap any airborne radioactive particulates inside the sampling trailer. This HEPA filter on the vacuum cleaner will have to be within its last DOP test schedule (six months).

B.1.3.4.1.2 Sampling Personnel

Sampling Personnel are protected from the toxic and radioactive contamination by the use of anti-contamination clothing, rubber gloves, bag-in/bag-out procedures, HEPA filters, airline or SCBA full face

respirators, local radon and decay daughter monitoring instrumentation, and the RTS (B.1.4). In addition a net covers the silo dome to prevent operators from falling into the residue in the event of a silo dome punch through. The airlines to be used have an effective lower temperature limit of 35°F. - 5345

B.1.3.4.2 Offsite Shipment of Samples for Laboratory Analysis

Shipment of samples offsite will be done according to procedure WMCO SOP 65-C-106 and 65-C-105. Samples for shipment will be packaged in Department of Transportation (DOT) specification 37A or 39 containers, depending upon the hazard class assigned to the packages during screening. All samples will be transported (exclusive use) by a licensed contractor to ensure prompt sample delivery. The packages will comply with DOT 49CFR.

B.1.3.4.3 Analysis Requirements and Results

The K-65 Silos (1 and 2) samples will be analyzed for physical, chemical, and radiological parameters. The required radiological analysis will be for isotopic uranium, isotopic thorium, isotopic radium, lead 210; gamma spectroanalysis will also be performed. All selected samples will be chemically analyzed for HSL inorganics, HSL volatiles, HSL semivolatiles, HSL pesticides and PCB's, toxic metals, and total uranium. Physical analysis of the K-65 residue will be performed to allow prediction of the expected behavior of the residues during treatment and/or disposal. The physical analyses to be performed are particle size distribution, Atterberg limits (plasticity), moisture content, and specific gravity, among others (See Subsection A.3).

B.1.4 Radon Treatment System

The RTS was installed at the K-65 Silos as a method of reducing the radon content in the silo head space for the K-65 Structural Remediation Project. Reduction of the radon content of the silo head space serves to reduce direct radiation exposure to personnel working atop the silos.

B.1.4.1 Design and Capacity

The RTS is a closed loop system in which gases from the silo head space are removed, passed through dehumidifying canisters and activated carbon filter(s), and then returned to the opposite side of the same silo. A schematic of the canisters of this system is shown as Attachment 7. The RTS piping is constructed of PolyVinyl Chloride (PVC) that is subject to ultraviolet and temperature embrittlement. The embrittlement conditions disavow any extensive use of this system past this resampling campaign and use of the RTS when the ambient temperature is below 0°F as determined by the RTS operator.

The RTS process will reduce the radon quantities in the silo head spaces and reduce the surface radiation of the dome from 140 mR/hr to less than 60 mR/hr after six to seven cycles. This operation takes approximately two to four hours to accomplish. The principle accident concern

involving the RTS is a complete pipe failure of the RTS between the silo and the inlet to the RTS shed. This event is discussed in B.1.4.4.

The piping between the RTS shed and the silo is constructed of 12-inch diameter PVC pipe, and 6-inch diameter flexible hose. The rigid pipe is supported throughout it's length on the silo berm. This piping is equipped with butterfly type valves to allow operation of the RTS in each silo or two silos simultaneously. The air movers, dehumidifying canisters and carbon filters are contained within a metal building that is surrounded by a 32-inch thick solid concrete block wall. Manual valve actuation rods extend through the concrete shielding wall. Access to the K-65 Silos and RTS shed is restricted by a locked woven wire fence.

The concrete block wall surrounding the RTS shed provides shielding for the radon gas and decay daughters trapped on the activated carbon filters.

B.1.4.2 Operation

Operation of the RTS will occur prior to any sampling activities and immediately after a visual inspection and test of the system piping to and from the silos to assure continuity of the gas movement system. All operations (sampling and valving) will be performed using the manually operated valve actuator rods that extend through the concrete block shielding and the walls of the metal shed.

The restrictions involved with the operation of the RTS are:

a) The RTS will be operated until the silo surface radiation rate is less than 75 mR/hr;
b) The RTS will be operated when the silo surface radiation rate climbs to 100 mR/hr;
c) Access to the RTS shed will be severely restricted for eight (8) days after the last operation of the RTS equipment. Access to the RTS shed during this period will be subject to special circumstances and conditions preapproved by Radiological Safety or the Radiation Safety Technician Supervisor. Access to this shed will be restricted for thirty (30) days after the last operation. Access to this equipment after the eighth day will be by issuance of a Radiation Work Permit (RWP) by a Radiological Safety Technician Supervisor.
d) Access to the RTS shed when the RTS piping has been disconnected from the silos and the maximum potential trap capacity does not exceed 25% of the silo inventory of radon as determined by Maintenance Site Engineering will be restricted for thirty (30) days after the last operation. Access to this equipment will then be by issuance of a Radiation Work Permit (RWP) by a Radiological Safety Technician Supervisor.
e) The RTS shall not be operated if the ambient temperature is less than $0^{o}F$ as determined by the RTS operator.
f) The RTS shall not be operated if excessive WL are detected in the RTS and K-65 silo area.

g) Prior to operation of the RTS the RTS operator and the RTS Radiation Technician shall inspect the RTS piping. This inspection shall consist of a visual inspection of the entire pipe length and an alpha frisking of RTS piping joints and connections.

B.1.4.3 Radon Treatment System (RTS) Entry

The RTS equipment is housed within a shielded metal shed. The equipment within this shed consists of two dehumidification canisters, four carbon filters, and an air mover (blower). This filtration/radon trapping equipment and blowers is connected with valves and piping. The valves are butterfly type valves equipped with actuator extension rods that penetrate the walls of the shed and the shielding. These valves are not a positive sealing valve, therefore, the valve position does not assure system isolation.

Due to the amount of radon trapped on freshly used carbon filters during sampling and the inherent direct gamma radiation rate (several Rad/hr) restrictions are to be emplaced to limit access to this process equipment. Free access to the RTS equipment after dome pumpdown will not be allowed until seven radon-222 half lives have expired (approximately 30 days) to reduce the direct gamma radiation rate at the filter surfaces to less than 75mR/hr. Entry to the RTS equipment is not to be allowed in any circumstances after dome pumpdown until two radon-222 half lives have expired (approximately eight days) and a Radiation Work Permit (RWP)is issued by a Radiological Engineering Health Physics Engineer after an area survey. This RWP will specify maximum individual residence time within this shed that will not exceed the 3.0 Rem/year personnel exposure limits for that individual.

B.1.4.4 Accidents Associated with the Operation of the RTS

The worst case accident associated with the RTS is a complete pipe shear with pipe end dislocation on the silo supply to the RTS at the start of dome radon reduction. This accident is analyzed in Attachment 8 of this document. The risk of this accident is solely based upon the consequence (assumed probability of occurrence is certainty), since A) a fracture of the RTS piping has already occurred and, B) the RTS is a temporary facility that does not conform to the DOE design requirements (DOE Order 6430.1A). Therefore, the worst case risk analysis of the RTS is solely an analysis of the consequence of occurrence.

Other potential incidents associated with the RTS are cracks in the RTS piping. During operation of the RTS, the supply half of the system is at a slight vacuum and leaks are into the system. The return half of the system is at a slight positive pressure and leaks are out of the system, but radon has been stripped from the gas by the carbon traps and the bulk release of radon from the system is negligible. When the RTS is connected to the silos and the system is not being operated, the dinural respiration of the silos will occur through the "path-of-least-resistance", which can be the cracks in the RTS piping thus changing the source location but not the bulk release of radon gas from the piping. Therefore, in the event of a WL monitor alarm in the K-65 area

indicating extensive RTS pipe cracking (But not a complete pipe dislocation) reduction of the local radon concentration can be accomplished by physical disconnection of the RTS from the silos.

B.1.5 Manpower Requirements

The silo sampling team will consist of 13 persons. The sampling team personnel are:

- Silo sampling task team leader (1)
- Crane operator (1)
- Crane Riggers (1)
- Sampling Technicians (2)
- Environmental and Radiological Technician (5)
- Health Physics Engineer (1)
- Quality Assurance Engineer (1)
- Analytical Technician (1)

The RTS operation nominally requires two personnel. An operator of the RTS system, and an RST to monitor the gamma flux on the silo dome surface. In addition to these two personnel, additional RSTs may be available, and a Health Physics Engineer is required to be at the FMPC.

The organization responsibility for this sampling taking is unusual. IT Corporation is responsible for the operations leading to the extraction of a sample core from the K-65 silo residue and the removal and packaging of subsamples from this core. IT corporation organization arrangement is as a subcontractor of ASI which is working directly under a contract with the U.S. DOE for the purposes of this K-65 silo residue sample taking. IT Corporation QA is responsible to assure that all required training, procedures, personnel and process safety equipment, personnel historical radiation exposure records, and sampling overview prior to and during the Sample Taking. IT Corporation is also responsible for job specific safety training.

WMCO represents the owner of the facility as the operating contractor of the FMPC site and as such is responsible for all the operations and QA at the K-65 Silo other than the actual sample taking. Prior to the sample taking, WMCO is responsible for operation of the RTS as a support of IT during sampling. WMCO is also responsible for providing IT personnel with Medical Support, Radiation Worker and Safety Training, Respirator Fit Testing, Radiation Instrument Calibration/Maintenance, supply of personnel radiation monitoring (TLD Badges and SRPDs), and maintenance of long term personnel medical and radiation exposure records. WMCO is also responsible for providing a Health Physics supervisor, and a portion of the required Radiation Safety Technicians. WMCO is also responsible for packaging the K-65 residue samples for transportation from the FMPC site to the offsite analysis and testing laboratory. A Management Organization chart for the K-65 Silo Sampling (IT), RTS operation and training (WMCO), and for Emergency Conditions (IT and WMCO) is given as Attachment 9.

In the event of a OSR violation or a Unusual Event at the K-65 Silos during Sample Taking or any event as specified in subsection B.2.10, shall be notified as outlined in EMP-001 and FMPC-704, UOR reporting.

The minimum number of personnel required for sample taking from a silo is six. The minimum consists of:

- Crane Operator (1)
- Crane Rigger (1)
- Sampling Technicians (2)
- Silo sampling task team leader-supervisor (1)
- Radiation Safety Technician

B.1.5.1 Training and Qualification

All WMCO and IT personnel involved with this project are to be trained in accordance with WMCO requirements. This training shall include, but is not limited to, Radiation Worker Training, OSHA requirements, Respirator Training/Certification, and job specific K-65 Sample Taking. These training programs require individual documentation. The crane operator and the rigger will require specialized training/certification. Documentation of this training/certification will be required.

A simulated sample taking will be performed at Silo 4. This dry run will be used as an operating procedure shakedown and operator training exercise. The order of silo sampling is Silo 4 (Dry Run) and K-65 Silos 1 and 2.

B.1.5.2 Medical Requirements

Medical Physicals for all involved sampling team personnel will be required to assess individual "fitness for duty", suitability for respirator use, and heat tolerance while wearing Anti-C clothing.

B.2 Operating Procedure(s)

The operating procedures for this silo sampling have been prepared. A driving procedure (DWP-001 "K-65 Silo Sampling Procedure") outlines the general plan plus lists the purpose, scope, responsibility, and prerequisites. This procedure also references the detailed operating procedures to be followed during execution of individual operation steps during repackaging.

The DWP-001 "K-65 Silo Sampling Procedure" outlines the operations and references the detailed procedures to be followed prior to starting sampling operations, namely: the marking of sample points, preparation of sampling equipment, positioning of the crane for silo core sample taking (DWP-006 "Setup and Positioning of the Crane"), and the WMCO procedure for operation of the RTS on the K-65 Silos (1 and 2) (RES-01-001 "Procedures for RTS").

B.2.1 Removal of Silo Manhole Lid(s)

0 28

The manhole lids are to be removed such that samples can be taken, but containment is maintained. This is accomplished using a bag-in/bag-out method as outlined in procedure DWP-001, "K-65 Silo Sampling Procedure". 5345

B.2.2 Collection of the Core Samples

The core sample collection is accomplished by upending the empty sample probe with the crane, attaching the plastic tube bag to the probe, moving the empty core sampler above the manhole, attaching the plastic tube bag to the manhole flange, and inserting the probe into the silo. The sample is collected by inserting the probe into the silo sludge, and removing the sample probe using the plastic tube bag to maintain containment of the sample probe and the silo flange. These operations are described in procedures DWP-004, "Mock Silo Sampling", and DWP-001, " K-65 Silo Sampling Procedure".

B.2.3 Replacement of the Manhole Lid(s)

The manhole lids are to be replaced using bag-in procedures that will maintain silo containment consistent with the procedure DWP-001, "K-65 Silo Sampling Procedure".

B.2.4 Sample Core Transportation

After the sample core is removed from the silo it will be placed in the temporary carrier (truck), and transported to the examination trailer area as described in procedure DWP-001, " K-65 Silo Sampling Procedure".

B.2.5 Collection of Samples from Core (Procedure & Requirements)

The sample core will then be manually transferred to the Inspection and Sampling Trailer. The activities involved with the initial sample core handling and sample taking operations are governed by procedure DWP-002, "Sample Core Handling". The on-site sample collections and methods are governed by procedure DWP-002, "Sample Core Handling". All of these operations are combined into one procedure to minimize health and safety effects by concurrently performing all three operations. The core sample will be cut into 18-inch sections and the individual samples will be taken from these sections and packaged for laboratory analysis in accordance with procedure DWP-002, "Sample Core Handling".

B.2.6 Sample Equipment Decontamination

All reusable sampling equipment that has become contaminated will be decontaminated according to the procedure SOP 65-C-106 "Silo Waste Handling". Disposable contaminated equipment will be placed into contaminated waste containers to maintain containment. All of these operations will be performed prior to reuse, storage outside examination area, or transportation to any other location.

B.2.7 Excess Sample Material Handling

Any silo core sample material remaining after collection of the examination and sectioning of the cores is to be placed into archive storage according to the WMCO Procedure SOP 65-C-105, "Long-Term Storage of Archive Samples".

B.2.8 Sample Analysis

The transfer of packaged samples for laboratory analysis is contingent upon the desired data. Some of the analyses will be performed by the WMCO laboratory. The preparation of these samples for inplant transfer will be in accordance with WMCO procedures "Preparation of Samples for Analysis". Some analyses will be performed by off-site laboratories. The preparation of these samples for out-of-plant transfer will be in accordance with WMCO procedure SOP 65-C-105 and 65-C-106. The type of sample analysis governs the handling based upon the desired laboratory handling the analysis. Inorganic constituent analysis is governed by Analysis of Sample Extract for Inorganic Constituents. Organic constituent analysis is governed by Analysis of Samples and Extracts for Organic Constituents. Isotopic constituent analysis is governed by Isotopic Assays of Samples.

All samples will be controlled under a Chain-of-Custody that will directly trace the sample from the Sampling Team Leader to the laboratory performing the analysis.

B.2.9 Contaminated Waste Materials

Waste materials and supplies generated during the silo sampling operation are to be accumulated and placed in appropriately labeled containers until the silo sampling is completed. At the end of the silo sampling operation these wastes will be packaged, handled, and removed from the work area in accordance with WMCO procedure SOP 65-C-106, "Silo Waste Handling".

B.2.10 Abnormal Conditions

Emergencies, accidents, or out-of-specification conditions associated with the silo sampling will be handled consistent with the Abnormal Occurrence Procedure (Plan-001, "Site Specific Health and Safety Plan" and 65-C-201, "K-65 Silo Numbers 1 and 2 Area Emergencies). This procedure is cross referenced with most potential accidents that may occur as the result of silo sampling activities. The accident procedures considered include Personal Injuries, Damage or Failure of the silo or Silo Roof, Crane Failure, Mechanical Failure, Loss of Equipment into Silo Manhole, "Vibra-Corer" Failure, Material Spills, Transportation Accidents (on and off site), Fires, Weather Initiated Accidents, Seismic Events, Floods, Security Breaches, Failure of on-site Examination Equipment, and Documentation Errors. Emergencies, accidents, or out-of-specification conditions associated with the RTS operation will be handled consistent with 65-C-109 "Radon Treatment System Emergencies".

B.2.11 Analysis Confirmation

5945

Excess sample material from off-site laboratories will be returned to WMCO for confirmatory analysis. K-65 procedures will be followed during the confirmatory analysis. Procedures will be followed for determining the engineering properties of the silo residues.

4. MAJOR EQUIPMENT FOR THE OPERATION: See B.1.3 Sampling Equipment and B.1.4 RTS

5. NUMBER AND CLASSIFICATION OF OPERATING PERSONNEL:

See B.1.5 Manpower Requirements

6. NUCLEAR / RADIOACTIVE MATERIALS: The majority of radioactive materials involved with this project are radium-226, the radium-226 decay chain (radon 222), uranium, and thorium-230.

7. INTERACTION WITH OTHER FACILITIES INVOLVING NUCLEAR / RADIOACTIVE MATERIALS: An offsite laboratory is used for the sample analysis. The sample transportation and packaging are described in section B.2.8 and B.2.11.

8. TOXIC AND FLAMMABLE SUBSTANCES: There are no flammable materials aside from fuels used for the truck, crane, and ancillary vehicles involved with this project. Heavy metals found in the silos are toxic. The materials involved are listed in Attachment 2.

9. UNIQUE / UNUSUAL SAFETY PROBLEMS: Restrictions due to unique safety problems are:

A. The K-65 Silos 1 and 2 are susceptible to vibration and concussion damage. The restrictions imposed to preclude these hazards are described in section B.1;
B. Significant Gamma radiation is emitted by the radon and radon daughters contained in the K-65 Silos 1 and 2. Restrictions on operator radiation exposure are contained in section B.1.2;
C. Operation of the RTS is also required to decrease radon levels and to reduce the radiation dose rates on the K-65 Silos dome surfaces (ALARA). Operation of this system is described in section B.1.4.
D. Access to the radon adsorption shed is restricted. Free access can occur 30 days (approximately seven half lives) after the last operation of the RTS. Access after K-65 silo Radon Reduction under a Radiation Work Permit (RWP) can occur eight days (approximately two half lives) after the last operation of the RTS and an area radiation survey. Special access prior to the eight day waiting period can occur only after review by Radiological Engineering. The RWP will specify the maximum exposure time.
E. Access, system shutdown, and silo isolation of the RTS if WL monitors indicate a sudden increase of radon concentrations.

10. EXISTING SAFETY DOCUMENTATION:

A. Study and Evaluation of K-65 Silos, Bechtel National Incorporated, Oak Ridge, Tennessee, January, 1990
B. The Camargo Associates, Limited Report, "K-65 Silos Study and Evaluation for the Feed Materials Production Center", 1986, Vol. 1, Sections I through IX
C. Safety Assessment on the Sampling of the K-65 and Metal Oxide Residues (WMCO:OH(NS):88-0130)
D. OSR for the WMCO Sampling of the K-65 Silos , 1 and 2 (WMCO:SR(IA):88-0518).
E. Safety Assessment on the Repair and Test of the RTS on the K-65 silos (WMCO:OH(NS):90-1023)

11. PERTINENT SAFETY CRITERIA AND REFERENCES:

A. DOE Order 5480.1B, "Environment, Safety, and Health Program for Department of Energy Operations."
B. DOE Order 5480.5, "Safety of Nuclear Facilities"
C. DOE Order 5480.11, "Requirements for Radiation Protection"
D. DOE Order 5481.1B, "Safety Analysis and Review System."
E. 10 CFR Part 20, "Standards for Protection Against Radiation."
F. Regulatory Guide 8.10, "Operating Philosophy for Maintaining Occupational Radiation Exposures As Low As Reasonably Achievable."
G. OSHA and EPA Regulations
H. ANSI Standards (ANSI Z-88.2-1980)
I. 29 CFR 1910.134, "Respiratory Protection"
J. 49 CFR 173, "DOT Packaging Criteria for Shipment of Radioactive Materials"
K. DOE Order 6430.1A, "General Design Criteria"
L. Accident Investigation Report concerning the TEE Failure discovered March 21, 1990.
M. "Study and Evaluation of K-65 Silos", Bechtel National Incorporated, Oak Ridge, Tennessee, January, 1990
N. FMPC-2084, "FMPC Radiation Control Manual", Radiological Safety Section, ISR&T, WMCO, July 16, 1990
O. Drawings 34X-5500-M-00115-0 Repair of RTS Inlet Pipe;
34X-5500-M-00116-0 RTS Plans, Details, and Sections;
34X-5500-M-00118-0 RTS Pipe Supports and Silo Manways.

12. CONCLUSIONS: The nature of the hazards identified for this project for the sampling of the materials in the K-65 Silos 1 and 2 are such that require Operational Safety Requirements as described in DOE OR 5481.1B. Further, since this detailed Safety Assessment describes all that is necessary to form the basis of the OSR (Safety Limits, Limiting Conditions for Operation, Surveillance Requirements, etc.) no further safety analysis is required as set forth in DOE 5481.1B, Chapter II, Paragraph 5.b.(2).

13.APPROVALS:

- 5345

Robert G. R. Q. Date 9/10/90
System Safety Engineer

J. L. Elliott Date 9/10/90
Manager, Nuclear and System Safety

Dennis J. Carr for J.P. Hopper Date 9/12/90
Manager, CERCLA Program

Richard Boyd Date 09.10.90
IT Site Manager, K-65 Silo Resampling Project

Attachments:

1 FMPC Waste Storage Area Showing K-65 Silos (1 and 2)
2 Elemental Analysis of the Wastes contained in Silo 1 and 2
3 Typical Cross Section of the K-65 Silos (1 and 2)
4 Site Map Showing Location of targeted cases for worst case K-65 Silo accidents
5 Crane Diagram
6 Sitemap Showing Examination Trailer Location
7 Schematic Of Radon Treatment System (RTS)
8 K-65 Sampling Management Organization Chart

- 5345

Attachment 1
FMPC Waste Storage Area Showing K-65 Silos (1 and 2) and Silo 3

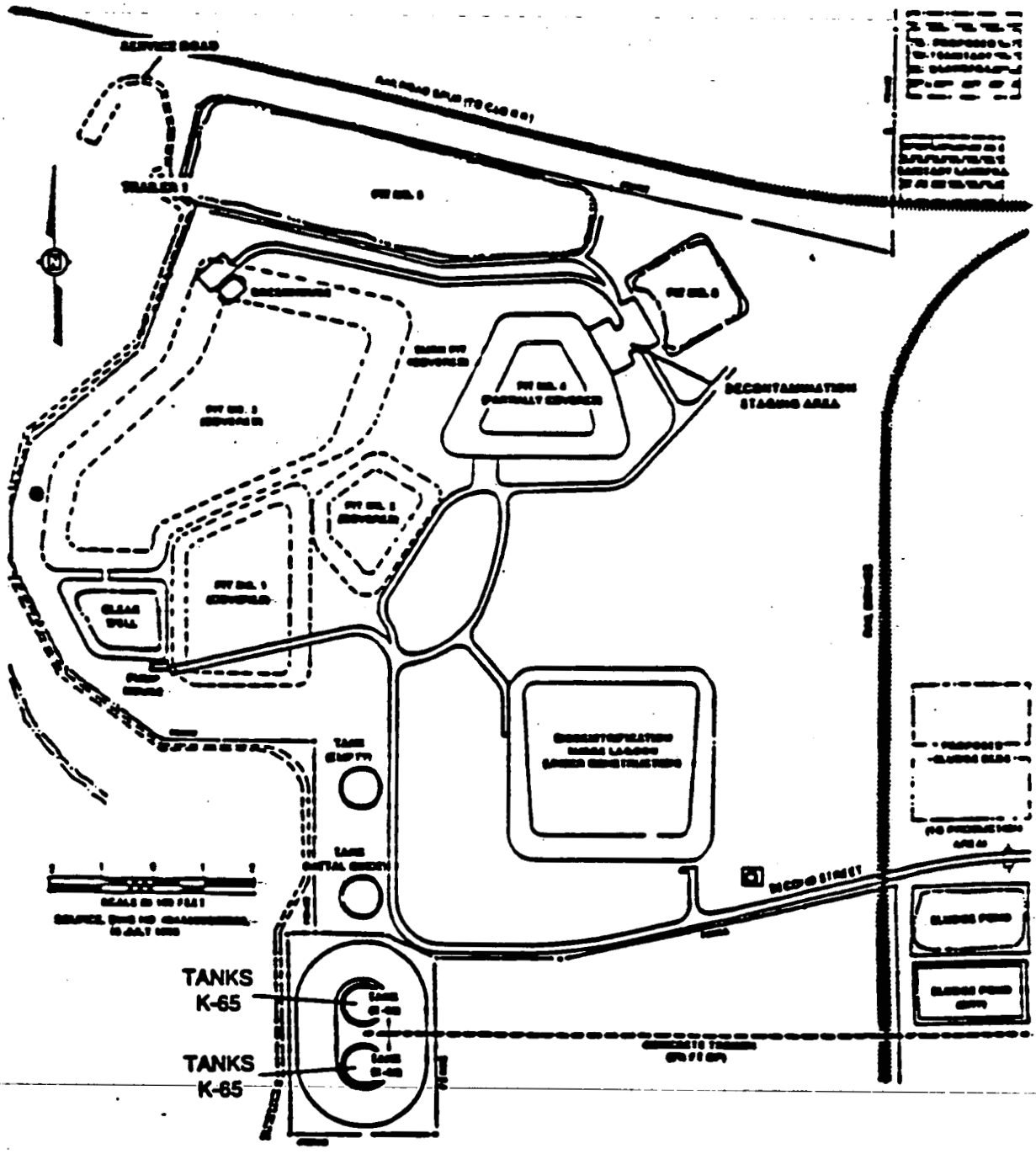

0 34

Attachment 2
Elemental Analysis of the Wastes contained in Silo 1 and 2

- 5345

Elemental Characterization of the FMPC K-65 Wastes[a]
September 1970

Constituent	Percentage	Weight (Metric Tons)
Metals:		
Ag	<0.002	0.176
Al	<0.875	77
As	<0.03	2.64
Au	<0.005	0.44
B	0.015	1.32
Ba	0.07	6.16
Be	ND*	-
Bi	ND*	-
Ca	3.89	342
Cd	ND*	-
Cl	No data	-
Co	0.175	15.4
Cr	0.012	1.06
Cu	0.05	4.4
F	No data	-
Fe	1.2	105.6
Hg	ND*	-
La	0.089	7.83
Mg	1.25	110
Mn	0.02	1.76
Mo	0.02	1.76
Na	0.7	61.6
Ni	0.225	19.8
Pb	5.1	448.8
PO_4	ND*	-
Sb	ND*	-
Se	No data	-
SiO_2	40.76	3.587
Sn	0.008	0.7
SO_4	No data	-
Ti	0.07	6.16
V	0.021	1.85
Zn	ND*	-
Zr	0.02	1.76
Rare Earths:		
Dy	0.003	0.26
Er	ND*	-
Eu	ND*	-
Gd	0.004	0.35
Ho	<0.0015	0.13
Lu	ND*	-
Sm	0.0048	0.42
Tb	ND*	-
Tm	<0.0008	0.07
Y	0.004	0.35
Yb	0.0006	0.05

[a]Percentage and weight are based on sample analysis and do not account for total reported amount (8800 metric tons) of K-65 residues.

*ND = not detected.

0 35

- 5345

Attachment 3
Typical Cross Section of the K-65 Silos (1 and 2)

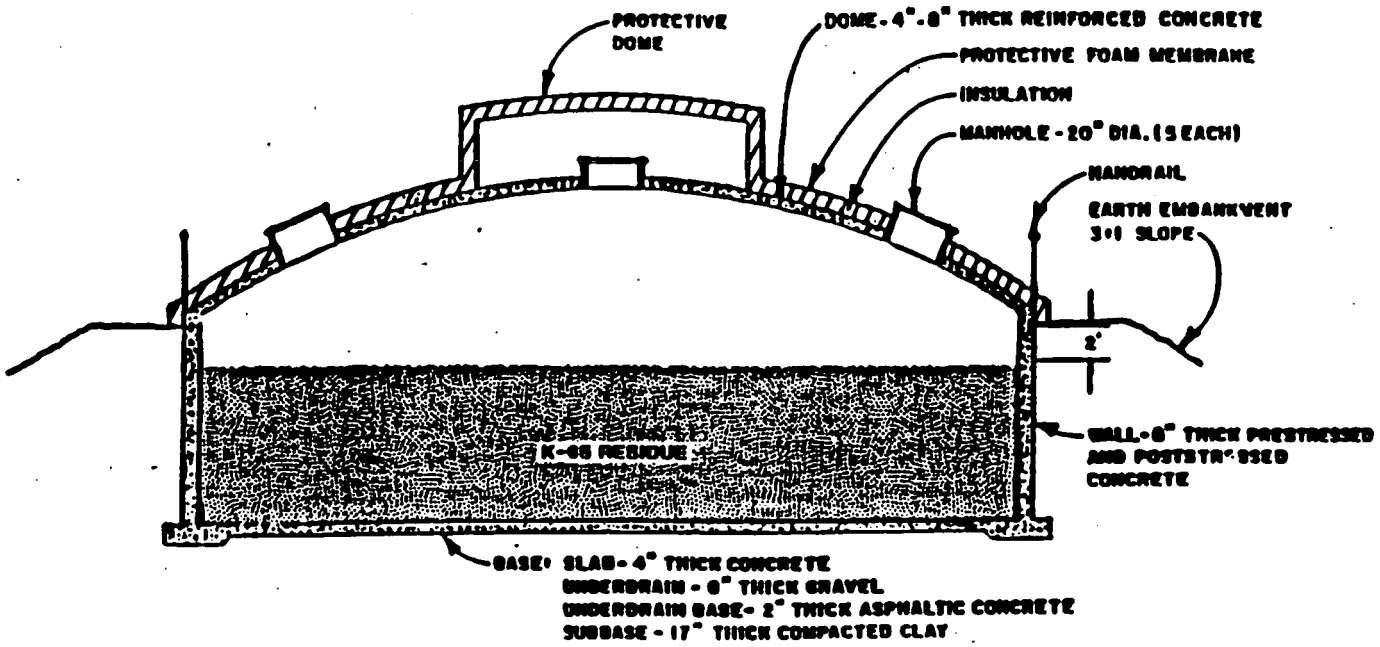

0 36

Attachment 4

Site Map Showing Location of targeted cases for worst case K-65 Silo accidents

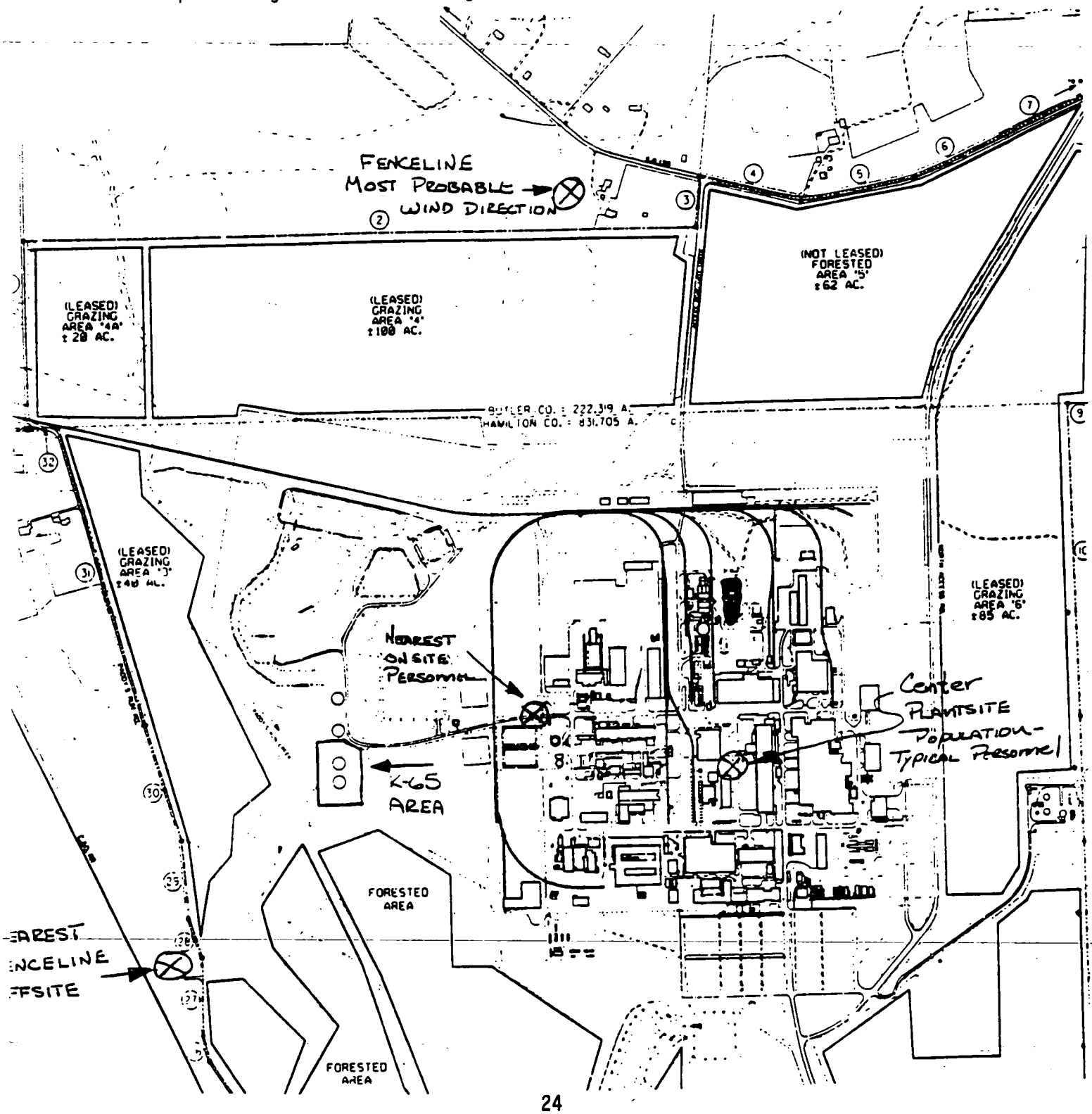

Attachment 5
Crane Diagram

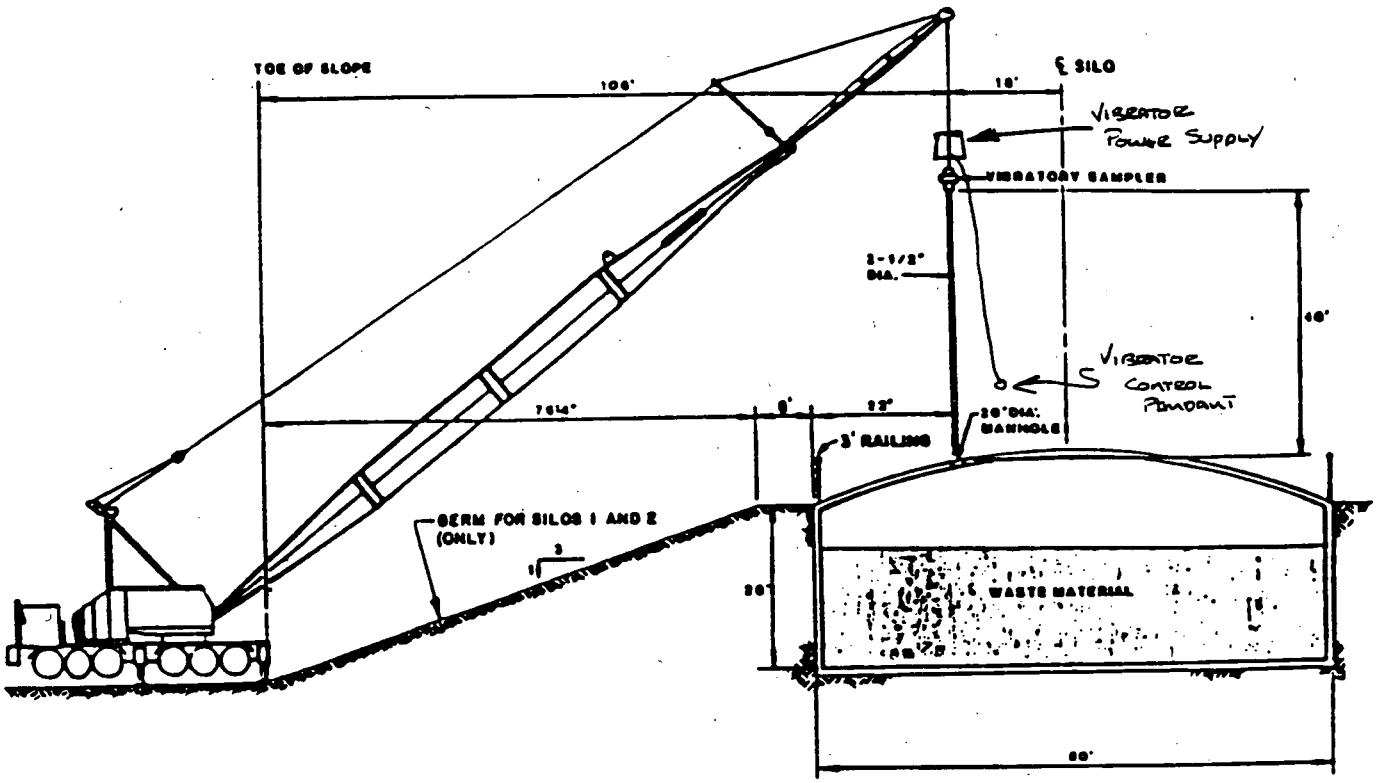

CONCEPTUAL POSITIONING OF CRANE AND SAMPLER

NOT TO SCALE

Attachment 6
Site Map Showing Examination Trailer Location

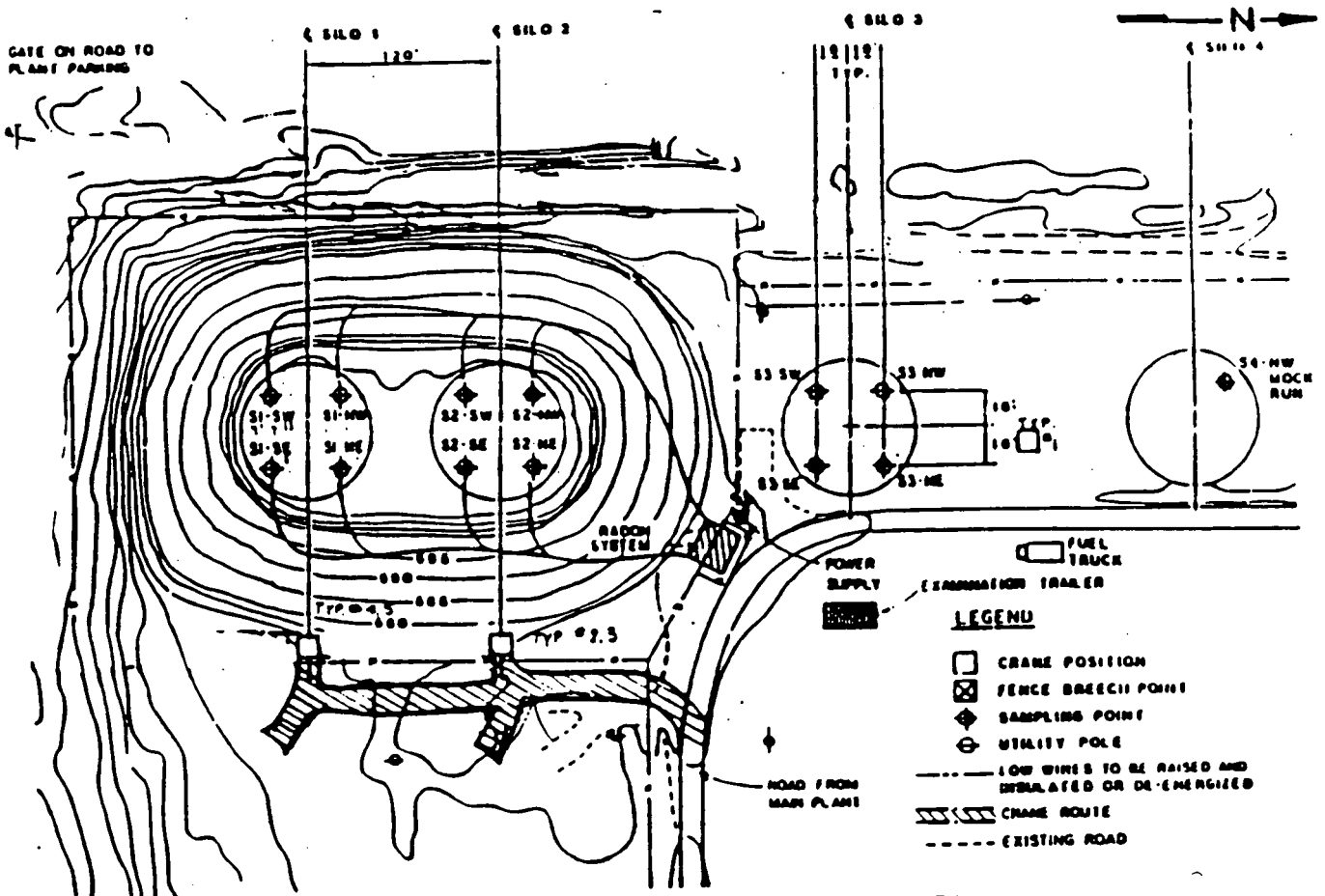

LAYOUT OF K-65 METAL OXIDE SAMPLING AREA

NOT TO SCALE

Attachment 7
Schematic Of Radon Treatment System (RTS)

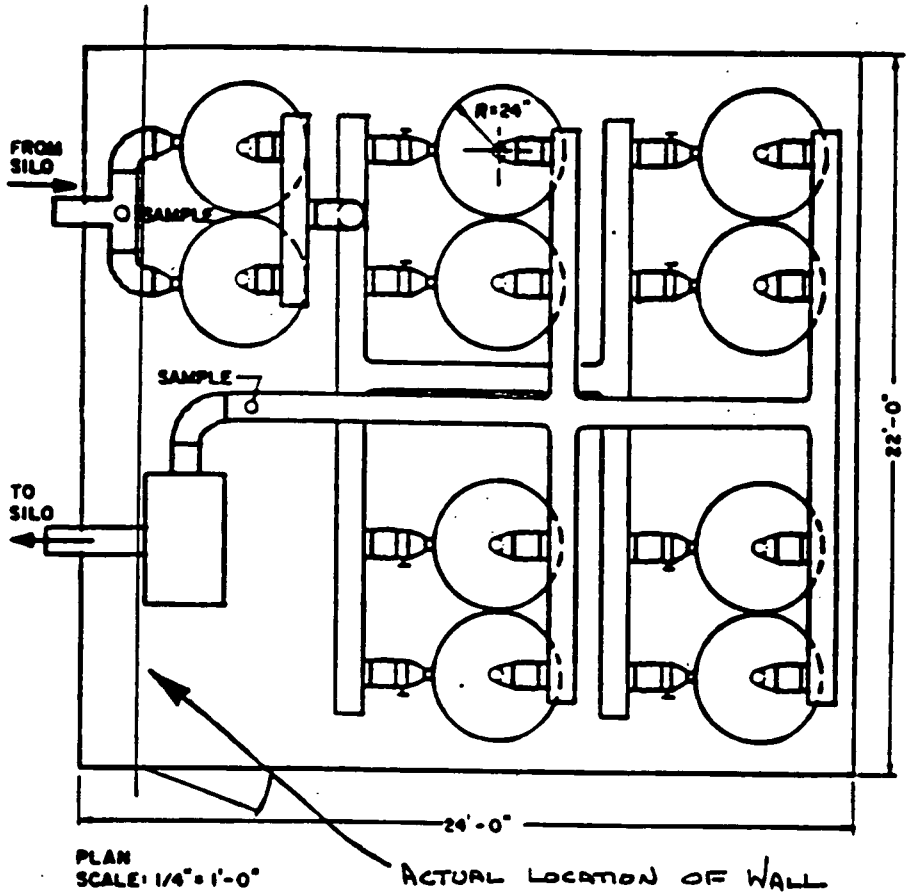

ATTACHMENT 8

RTS failure (Double Ended Pipe Break)

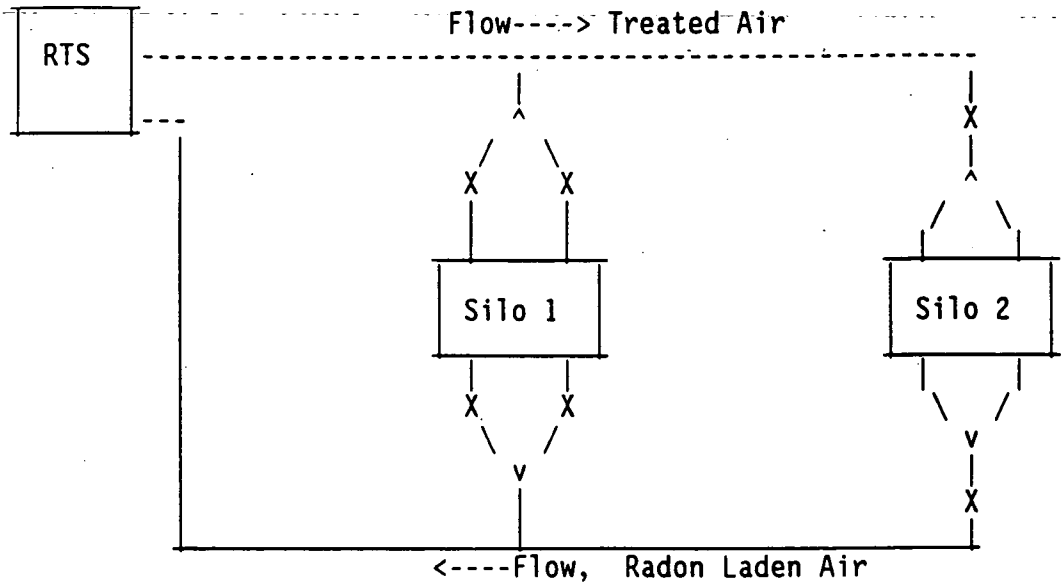

Data:

Worst case pipe break is a complete pipe shear with pipe end dislocation on the silo supply to the RTS at the start of dome radon reduction. Since the RTS operates only on one dome at a time the model will consider radon gas from one dome as the release source.

Dome Radon Inventory - Approximately 20 Ci radon per dome, 40 Ci total
RTS Air moving Capacity - 1000 CFM
Dome Ullage Volume - Approximately 50,000 ft^3 per dome
Radon Generation Rate from the residue - 0.00063 Ci/min (660/2/365.25/60)

Radon Mass Balance for a dome:
Assumption: 100% trapping efficiency (no dome radon recycle, Eff=1)

In: $Q*(1-Eff)*C_{Rn}$ Eff is RTS trapping efficiency

Out: $-Q*C_{Rn}$

Generation: F_{Rn}

Accumulation: $V*dC_{Rn}/dt$

Mass Balance: In-Out+Generation=Accumulation

$$Q*(1-Eff)*C_{Rn}-Q*C_{Rn}+F_{Rn}=V*dC_{Rn}/dt$$

Boundary Condition: @ t=0 $C_{Rn}=C_{Rn}o$

ATTACHMENT 8 (Continued)

RTS failure (Double Ended Pipe Break) - 5345

Putting in known and assumed numerical values

$Q=1000\ ft^3/min$ (Known)
$V=50,000\ ft^3$ (Known)
$C_{Rn}o=0.00040\ Ci/ft^3$ (20/50000 Known)
$F_{Rn}=0.00063\ Ci/min$ (660/2/365.25/24/60 Known)

Putting in these numerical values and solving the mass balance differential equation with the boundary conditions yields the following solution.

$$C_{Rn}=0.00040*\exp(-t/50)-6.3x10^{-7}*(\exp(-t/50)-1)$$

$$C_{Rn}=6.3x10^{-7}*(634*\exp(-t/50)+1)$$

t is in minutes, C_{Rn} is in Ci/ft^3

To determine the total amount of radon released from the silo and the pipe break on the RTS supply line, the radon concentration is multiplied by the flow rate and the Mass Balance is integrated over the duration of the release. Assuming that the pipe break occurs prior to or at the initiation of the dome radon reduction (worst case by maximizing released radon concentration) the total amount of released radon is expressed as:

$$m_o=\int_0^{tx} 1000*C_{Rn}*dt=\int_0^{tx} 1000*6.3x10^{-7}*(634*\exp(-t/50)+1)dt$$

$$=6.3x10-4*(31700*(1-\exp(-t/50)+t)$$

Using these expressions the following table was generated. The first column is the time since initiation of the dome radon reduction, the second column is the radon concentration, the third column is the dome radon inventory, the fourth column is the radon release rate, and the fifth column is the total amount of released radon assuming that the break occurred at initiation of the radon reduction.

ATTACHMENT 8 (Continued)

RTS failure (Double Ended Pipe Break)

- 5345

t (min)	C(Ci/ft^3)	V*C(Ci)	Q*C(Ci/min)	$\int_0^t Q*C\,dt$(Ci)	
0.5	0.00040	20.0	0.40	0.20	
1.0	0.00039	19.5	0.39	0.40	
2.0	0.00038	19.0	0.38	0.78	
5.0	0.00036	18.0	0.36	1.90	
10.0	0.00033	16.5	0.33	3.63	
20.0	0.00027	13.5	0.27	6.60	
50.0	0.00015	7.5	0.15	12.66	
100	0.00005	2.5	0.05	17.33	
200	0.00001	0.5	0.01	19.73	
500	6.48×10^{-7}	0.032	0.00065	20.29	Radon Release Rate is the same as the radon generation rate from the silo residue
1000	6.3×10^{-7}	0.032	0.00063	20.60	
2000	6.3×10^{-7}	0.032	0.00063	21.23	
5000	6.3×10^{-7}	0.032	0.00063	23.12	
10000	6.3×10^{-7}	0.032	0.00063	26.27	
20000	6.3×10^{-7}	0.032	0.00063	32.57	
50000	6.3×10^{-7}	0.032	0.00063	51.47	

If the RTS ran continuously the amount of radon released from the silo after 1 calendar year (526,000 minutes) would be 351.3 Ci. A net increase of 21.3 Ci released above the annual release without the RTS operation. Therefore, the time period with increased radon release is effectively the first 60 minutes (1 hour) of this event.

Targeted individuals for the release of Radon from the domes are:

(1) the nearest offsite individual (Fenceline 500m SW of silo);
(2) nearest onsite individual not associated with sampling (Guard in Waste Area Guard Shack 350m E of silo);
(3) nearest offsite individual in most probable wind direction (Fenceline 1300m NNW of silo).

To determine the average radon release rate over the one hour duration of accelerated radon release, the total amount of released radon at a particular time was divided by the release duration. At 100 minutes the amount of radon released is predicted to be 17.33 Ci. Therefore, the average release rate is 17.33 Ci/100 min, or 0.1733 Ci/min (0.00289 Ci/sec).

This time weighted average release rate was used as the source term for the plume release. A worst case radon release would be a ground level release with no vertical stack velocity, a E or F atmospheric stability, a 2 m/s wind speed (5 mph), and the receptor(s) on the plume centerline.

ATTACHMENT 8 (Continued)

RTS failure (Double Ended Pipe Break)

The Gaussian Plume Code formulae for this condition is:

$$X=Q/(\pi*u*\sigma_y*\sigma_z)*EXP(-1/2*(h^2/\sigma_z^2+y^2/\sigma_y^2))$$

Since h=0 and y=0 this formulae simplifies to;

$$X=Q/(\pi*u*\sigma_y*\sigma_z) \quad Q=0.00289 \text{ and } u=2.0$$

The values for σ_y and σ_z (in meters) for class E and F atmospheric stabilities at the targeted distances are determined from figures in the Atmospheric Dispersion Handbook:

Downwind Distance	Atmospheric Stability Class			
	E		F	
meters	σ_y	σ_z	σ_y	σ_z
350	21	10	15	6.5
500	28	12	20	8
1300	80	20	51	15

Using these values the average radon concentration in $\mu Ci/m^3$ for the one hour duration of the release for the targeted individuals is calculated as:

Downwind Distance	Atmospheric Stability Class	
meters	E	F
350	2.18	5.44
500	1.37	2.87
1300	0.28	0.60

To convert these concentrations of radon to radiation exposure it was determined that exposure to 1 pCi/l of radon gas for 8760 hours (1 calendar year) will result in a 300 mRem inhalation dose. The duration of the exposures in question is one hour.

$1pCi/l = 1x10^{-3} \mu Ci/m^3$, and 300 mRem/8760 hr = 0.03425 mRem by inhalation

Therefore, exposure to 1 $\mu Ci/m^3$ for 1 hour = 34.25 mRem by inhalation.

ATTACHMENT 8 (Continued)

RTS failure (Double Ended Pipe Break)

Using this conversion the expected inhalation dose in mRem for these targeted individuals in the worst case conditions is for the one hour increased radon release is :

Downwind Distance meters	Atmospheric Stability Class E	F
350	74.7	186.3
500	46.9	98.3
1300	9.6	20.6

Attachment 9
K-65 Sampling, IT Management Organization Chart (Silo Sampling) - 5345

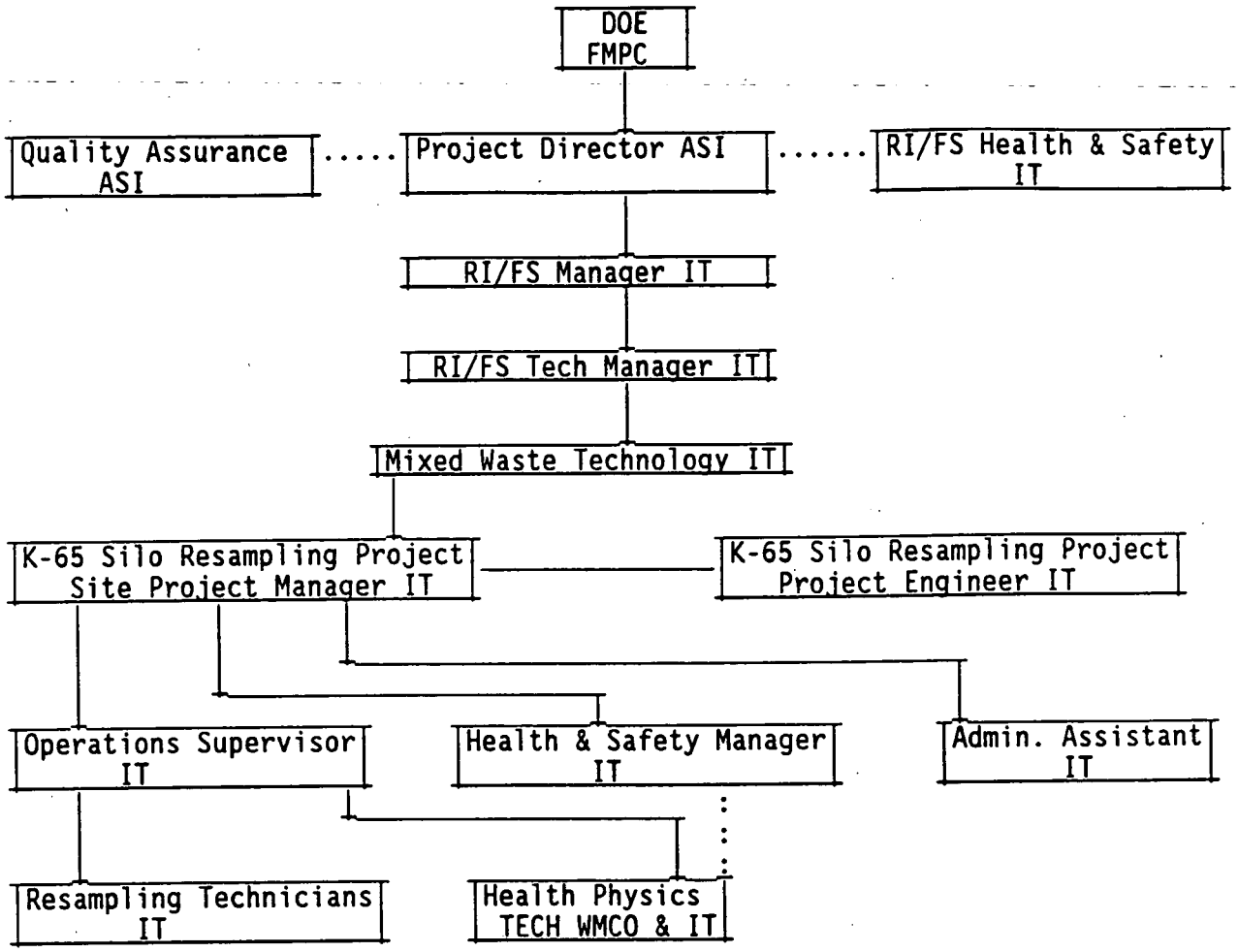

* WMCO Health Physics will supply RSTs to support Silo Sampling

Solid Lines Denote Management Responsibility
Dotted Lines Denote Advisory Responsibility

Attachment 9 (Continued)
K-65 Sampling, WMCO Management Organization Chart (RTS Operation)

- 5345

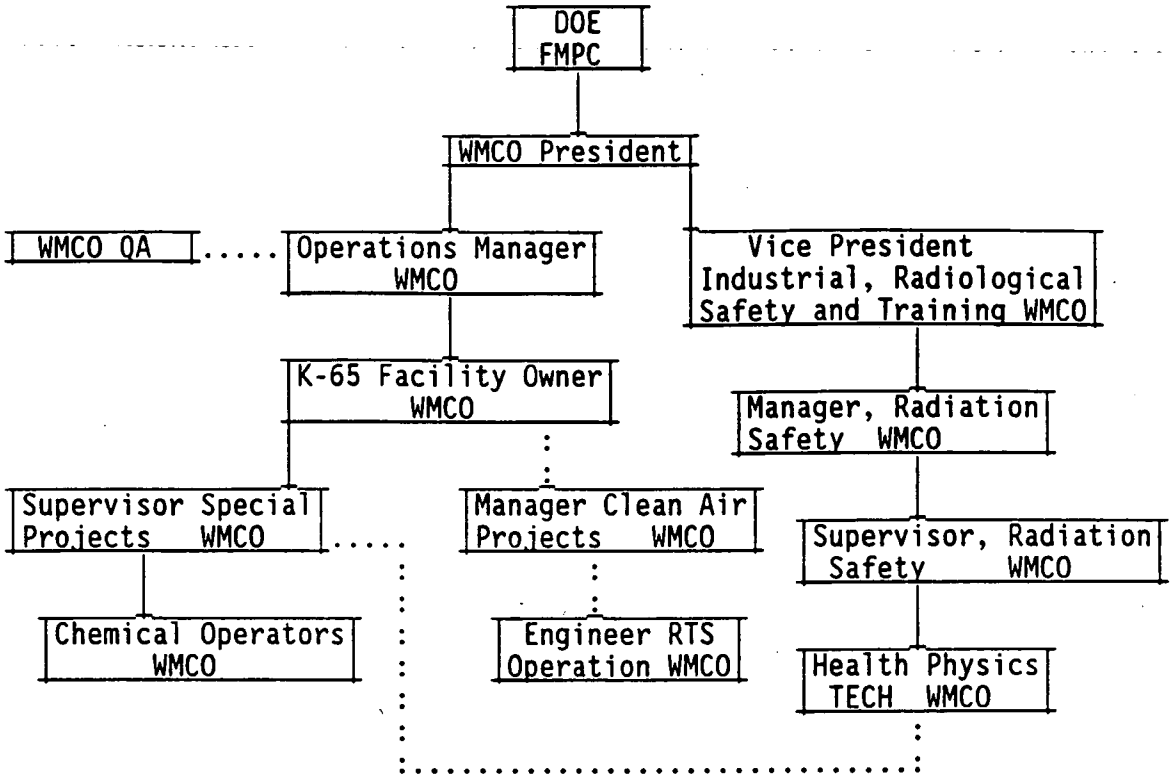

Solid Lines Denote Management Responsibility
Dotted Lines Denote Advisory Responsibility

0 47

Attachment 9 (Continued)
K-65 Sampling, WMCO and IT Management Organization Chart (Site Emergencies)

- 5345

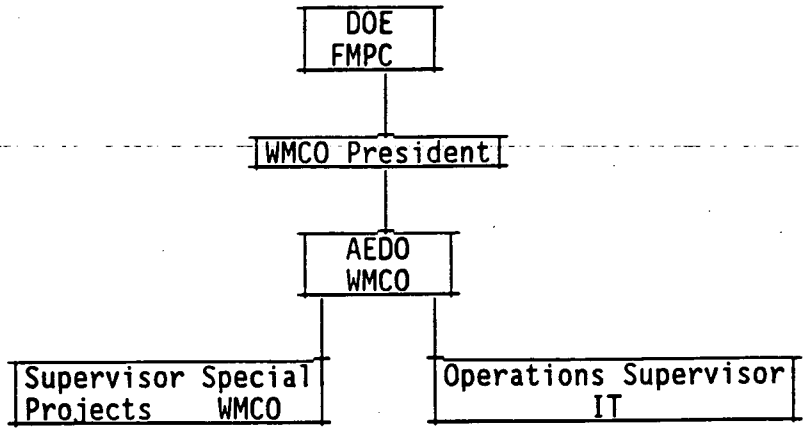

0 48