5894 U-004-306 .29

RESPONSE TO USEPA AND OHIO EPA COMMENTS OU2 DRAFT REMEDIAL INVESTIGATION REPORT - SEPTEMBER 1994

09/02/94

DOE-FN EPA
390
RESPONSES

5894

RESPONSE TO USEPA AND OHIO EPA COMMENTS OU2 DRAFT REMEDIAL INVESTIGATION REPORT

FERNALD ENVIRONMENTAL MANAGEMENT PROJECT
FERNALD, OHIO

REMEDIAL INVESTIGATION AND FEASIBILITY STUDY

SEPTEMBER 1994

U.S. DEPARTMENT OF ENERGY
FERNALD FIELD OFFICE

000001

FOREWORD

This document provides responses to U.S. Environmental Protection Agency (EPA) and Ohio EPA (OEPA) comments on the June 1994 Draft Feasibility Study (FS) Report for Operable Unit 2 at the U.S. Department of Energy (DOE) Fernald Environmental Management Project (FEMP). In total, 67 comments were received. Of these, 60 were made by the EPA, and 7 were made by the OEPA. The following is a "user's guide" of the rationale used to develop this comment response document and an overview of how the responses to the comments from both agencies are presented in the September 1994 Draft Final RI. The comment response document is submitted along with the corresponding change pages for the Operable Unit 2 RI.

Comment Response Document Organization. Responses are provided to OEPA comments (1-7), followed by responses to EPA comments (8-67). All comments have been re-numbered, sequentially, in the order of receipt.

A comment number cross-reference list is provided at the end of this introduction. OEPA comments 1-7 retain their original numbering. For EPA comments 8-67, this cross-reference also identifies each original EPA comment number and its corresponding page number of the EPA comment package. The list also identifies the commentor, section and page number where the subject of the comment appeared in the June 1994 Draft RI. The original page numbering has been maintained to facilitate easier review.

Each comment and response has four components:

- The comment "header" (commenting organization, commentor, section number, page number, line number, code, and original comment number in parentheses). The reference location in the comment header refers to the appropriate text, table, and/or figure, and the corresponding section/page/line of the June 1994 Draft Operable Unit 2 RI.

- The agency comment, unedited.

- The narrative response, beginning with the DOE disposition on the comment.

- The action statement that identifies the substantive revisions made as a result of the comment. The specific change(s) made to the corresponding text in the Draft Final RI are identified, to the extent practical. Each action statement identifies the **new** location of the changes in the text, table, or figure in the 1994 Draft Final RI, where possible. It is important to note that revisions and insertion of figures and tables into the text have caused the page numbers to shift. Where new pages result from the implementation of a response, original numbering is maintained by adding a letter to the original page number (i.e., 6-197, 6-197a, etc.).

OU2 COMMENT/RESPONSE LOG
SUBMITTAL DATE: SEPTEMBER 6

Comment #	Agency Comment #	Agency	Commentor	Section	Page #
1	xx	OEPA	OFFO	NA	NA
2	3-12	OEPA	DDAGW	3	3-69
3	3-18	OEPA	DDAGW	NA	NA
4	3-26	OEPA	DDAGW	3	3-105
5	4-95	OEPA	DDAGW	NA	NA
6	72	OEPA	OFFO	Fig. 4-13	4-176
7	5-15	OEPA	DDAGW	NA	NA
8	5	EPA	Saric	4.0	NA
9	12	EPA	Saric	A.2	NA
10	13	EPA	Saric	A.2	NA
11	1	EPA	Saric	NA	NA
12	2	EPA	Saric	4.0	NA
13	3	EPA	Saric	4.0	NA
14	4	EPA	Saric	4.2.4	4-71
15	16	EPA	Saric	4.3.2	4-131
16	26	EPA	Saric	4.4.3	4-218
17	28	EPA	Saric	4.4.6	4-255
18	36	EPA	Saric	4.5.6	4-329
19	67	EPA	Saric	A.1.7.1	A-1-34
20	82	EPA	Saric	A.2.8.2.1	A.1.7.1
21	1	EPA	Saric	3.4.2	3-93
22	2	EPA	Saric	4.1.1	4-5
23	3	EPA	Saric	4.1.2	4-6
24	4	EPA	Saric	4.1.2	4-9
25	5	EPA	Saric	4.2.2	4-44
26	6	EPA	Saric	4.2.4	4-94
27	7	EPA	Saric	4.2.5	4-95
28	8	EPA	Saric	4.2.6	4-97
29	9	EPA	Saric	4.3.2	4-100
30	10	EPA	Saric	4.3.2	4-127
31	11	EPA	Saric	4.3.2	4-127
32	12	EPA	Saric	4.3.2	4-128
33	13	EPA	Saric	4.3.4	4-146
34	14	EPA	Saric	4.4.4	4-225
35	15	EPA	Saric	4.4.4	4-225
36	16	EPA	Saric	4.4.4	4-234
37	17	EPA	Saric	4.4.6	4-249
38	18	EPA	Saric	4.5.2	4-263
39	19	EPA	Saric	4.5.2	4-263
40	20	EPA	Saric	4.5.2	4-277
41	21	EPA	Saric	4.5.3	4-294
42	1	EPA	Saric	6.0	NA

OU2 COMMENT/RESPONSE LOG
SUBMITTAL DATE: SEPTEMBER 6

Comment #	Original Comment #	Org.	Commentor	Section	Page #
43	1	EPA	Saric	B.3.0, B.4.0	NA
44	3	EPA	Saric	6.3	6–23
45	4	EPA	Saric	6.3.6	6–61
46	5	EPA	Saric	6.4	6–81 to 6–89
47	6	EPA	Saric	B.2.4A.2.1	B–2–67 to –69
48	20	EPA	Saric	B–II	NA
49	1	EPA	Saric	6.2.1	6–5
50	2	EPA	Saric	6.2.1.2	B–2–17a
51	3	EPA	Saric	6.3	6–24
52	4	EPA	Saric	6.3.1	6–27
53	5	EPA	Saric	6.3.2	6–33
54	6	EPA	Saric	6.3.3	6–42
55	7	EPA	Saric	B.2.4A.2.3	B–2–84 to –93
56	8	EPA	Saric	B.2.4A.2.3	B–2–94 to –99
57	9	EPA	Saric	B.2.4.2	B–2–116
58	10	EPA	Saric	B.2.4.2	B–2–134
59	11	EPA	Saric	B.2.4.2	B–2–154
60	12	EPA	Saric	B.3.1.3.1	B–3–9
61	13	EPA	Saric	B.3.2.3.1	B–3–39
62	14	EPA	Saric	B.3.2.4.3	B–3–134
63	15	EPA	Saric	B.3.2.4.4	B–3–47
64	16	EPA	Saric	B.3.2.6	B–3–51
65	17	EPA	Saric	B.3.5.3.1	B–3–165
66	18	EPA	Saric	B.3.5.3.1	B–3–166
67	19	EPA	Saric	Sec. 6, App. B	B–4–1

0000-5

OPERABLE UNIT 2 REMEDIAL INVESTIGATION
OEPA COMMENT/RESPONSE DOCUMENT
SEPTEMBER 8, 1994

5894

Comment #: 1
Commenting Organization: Ohio EPA Commentor: OFFO
Section #: General Comment Page #: Line #: Code: C
Original Comment #:
Comment: When revising documents, DOE should also revise the page numbers on which these changes appear. In the OU2 document, the many changes that have been made have altered the page numbers, therefore a section of the document that originally appeared on Page 2-15, for example, may now be located on Page 2-30. When reviewing the corrected document, finding the modified text becomes laborious and difficult.

Response: Comment numbers were placed in the margins of the change pages to alleviate the difficulty of finding the changed text. A review for future document changes will be made to help reduce this difficulty.
Action: No action.

Comment #: 2
Commenting Organization: Ohio EPA Commentor: DDAGW
Section #: 3 Page #: 3-69 Line #: Code:
Original Comment #: 3-12
Comment: It is unacceptable to Ohio EPA to indicate that the till was found to be unsaturated simply because DOE did not leave the borings open long enough to achieve ground water recovery. The DOE CRU5 has repeatedly reported to Ohio EPA that the glacial till is saturated, but that the recovery rate is very slow. CRU2 has not demonstrated that CRU5s conclusions are in error. As a result, CRU2 should treat the till as though it is saturated, and should plainly indicate this approach throughout the OU2 RI report.

Response: CRU2 agrees to the precept that there is a degree of saturation throughout the till (from partial to total saturation); however, it must be kept in mind that wells have been installed in the till and screened at particular intervals and these wells have water levels. These water levels indicate a water table, which is "the upper surface of a zone of saturation" above which exists the vadose zone. However, in Section 5, CRU2 did consider the vadose zone saturated, which is a conservative approach and consistent with CRU5.
Action: Add the following text to 3-69, line 13.

"Operable Unit 2 agrees to the precept that there is a degree of saturation throughout the till (from partial to total saturation); however, it must be kept in mind that wells have been installed in the till and screened at particular intervals and these wells have water levels. These water levels indicate a water table, which is "the upper surface of a zone of saturation" above which exists the vadose zone."

0000-6

Comment #: 3
Commenting Organization: Ohio EPA Commentor: DDAGW
Section #: Page #: Line #: Code:
Original Comment #: 3-18
Comment: The hydraulic conductivity should be stated in the document text. Details on how it was calculated can be referenced to in Appendix H.

Response: Hydraulic conductivity is discussed in detail in Section 5.

Action: Details on calculation of Hydraulic conductivity are provided in Section 5 and Appendix A.

Comment #: 4
Commenting Organization: Ohio EPA Commentor: DDAGW
Section #: Page #: Line #: Code:
Original Comment #: 3-26
Comment: The line should be revised to state that no ground water was encountered, however, the borings were not left open for a sufficient period of time so as to achieve ground water recovery.

Response: The sentence will be edited to reflect the requested change.
Action: Page 3-105, Line 13, the following text was added to the end of the last sentence: "...Active Fly Ash Pile; however, the boreholes in the area were not left open long enough to observe groundwater recovery."

Comment #: 5
Commenting Organization: Ohio EPA Commentor: DDAGW
Section #: Page #: Line #: Code:
Original Comment #: 4-95
Comment: Specifically, which zones of the GMA are monitored by 2016, 3016, and 4016? Do they correspond with other 2000, 3000, 4000 series monitoring wells respectively?

Response: Wells 2016, 3016, and 4016 correspond to other 2000, 3000, and 4000 series monitoring wells; i.e, 2000 series is in the Upper GMA, the 3000 series is in the GMA above the blue-gray clay, and the 4000 series is in the Lower GMA.
Action: No action.

Comment #: 6
Commenting Organization: Ohio EPA Commentor: OFFO
Section #: 4 Page #: 4-176 Line #: Fig. 4-13 Code:
Original Comment #: 72
Comment: In Response to Comment #4-91, said change was not made. The comment was agreed to and the title of Figure 4-13 (pg. 4-176) was supposed to be changed. Please make this correction in the text.

Response: The Title will be changed to "Radionuclides and Metals of Concern Detected Above Background in Surface Soils in the Inactive Flyash Pile."
Action: The title on Figure 4-13 has been changed to "Radionuclides and Metals of Concern Detected Above Background in Surface Soils in the Inactive Flyash Pile."

Comment #: 7
Commenting Organization: Ohio EPA Commentor: DDAGW
Section #: Page #: Line #: Code:
Original Comment #: 5-15

Comment: The distinction between ground water and perched water is not made by the Ohio EPA. The DOE has used the two terms for apparent administrative distinction between the GMA and the glacial till aquifer, however, the Ohio EPA has always taken the view that the "perched water" is in fact ground water.

Response: As discussed with OEPA, a distinction of perched water, aquifer, and groundwater has been made for risk assessment purposes to avoid confusion when addressing possible pathways to receptors. It is agreed that water exists in the clay; however, for clarity, the term perched water is used when referring to a saturated interbedded granular zone where lateral transport or water withdrawal for consumption is possible.

Action: No action.

OPERABLE UNIT 2 REMEDIAL INVESTIGATION
U.S. EPA COMMENT/RESPONSE DOCUMENT
SEPTEMBER 6, 1994

Comment #: 8
Commenting Organization: U.S. EPA Commentor: Saric
Section #: 4.0 Page #: NA Line #: NA Code:
Original General Comment #: 5
Comment: This comment discusses expanding the summaries for each of the operable unit (OU) 2 subunits. The following comments pertain to each subunit as specified.

Solid Waste Landfill: The revised text collectively presents the results for the sediment and surface water. The only surface soil contaminant of concern (COC) that sediment and surface water samples collected downstream of the Solid Waste Landfill have in common is uranium. Grouping the results implies that certain trends are present. The text should be revised to individually present the results for sediment and surface water.

Lime Sludge Ponds: Conclusions regarding surface water are not presented in the revised text summary for the Lime Sludge Ponds. The text should be revised to include conclusion regarding surface water.

Inactive Flyash Pile: The text states that the flyash generally had lower concentrations of constituents than the fill material did. The text should be expanded to indicate which specific constituents such as metals, organics, or radionuclides where lower in the flyash than in the fill material.

South Field: The text should be revised to state that isotopes of eight not nine elements were detected in soil samples. Also, the text should be revised to state that ruthenium was not detected above background, as Table 4-48A indicates.
For the Great Miami Aquifer (GMA) 2000-series wells, the text should be revised to state that neptunium was detected above background, which is indicated in Tables 4-57 and 4-58.

Active Flyash Pile: For subsurface soil, the revised text states that lead-210 was detected above background. The text should be revised to state that lead-210 was not detected above background, which is indicated in Tables 4-62 and 4-63.
The conclusion regarding the detection of metals and organic contamination in shallow groundwater was deleted from the revised text. The revised text should include this conclusion.

The text should be revised to state that thorium, a radionuclide, was detected above background in perched groundwater. Also, the conclusion regarding the conceptual model should be moved from Section 4.0 to Section 6.0.

0000-9

Response: The summary for the Solid Waste Landfill will be changed to reflect the deletion of the existing text for the surface water and sediment, and the addition of the new text.

Text regarding surface water will be added to the summary for the Lime Sludge Ponds.

After further review of the data and the boring logs the statement made is not reflected often enough in the data; therefore, the statement shall be deleted.

The text in the summary for the South Field will be revised with the changes indicated.

The text in the summary for the Active Flyash Pile will be revised with the requested change.

Action: The text on Page 4-95, Section 4.2.6, Lines 35 through 38 has been replaced with the following text:

A comparison of upstream and downstream surface water samples from the Solid Waste Landfill drainage ditch indicated total uranium concentrations of approximate equal value. A standing surface water sample from No. 1947, which is east and upstream of the landfill, had total uranium results within the same order of magnitude as the surface water samples collected from the drainage. This indicates that the Solid Waste Landfill may not be the only source for the uranium detected in the drainage ditch.

Sediment samples were collected downstream of the Solid Waste Landfill and were compared to the Solid Waste Landfill surface soil samples. The surface soil COCs beryllium, neptunium, plutonium, uranium, benzo(a)pyrene, benzo(b)fluoranthene, carbazole, and indeno(1,2,3- cd)pyrene were also detected in the downstream sediment sample. This would indicate that the migration of contaminants from the Solid Waste Landfill to the drainage ditch north of the landfill may have occurred.

The following text has been added to the summary for the Lime Sludge Ponds Section 4.3.6, Page 4-170:

There are no perennial sources of running surface water within the battery limits of the Lime Sludge Ponds. Precipitation remains in the ponds since they are contained. The only source of surface water runoff is the steep outside berms of the south pond, and since the surface area of the berms is small and has a vegetative cover, the runoff is minimal and runs off in sheet flow.

The text on Page 4-195, Lines 31 through 33 have been deleted.

Page 4-321, line 13, change nine to eight.

Page 4-321, line 18, ruthenium has been deleted.

Page 4-322, line 44, neptunium has been added.

Page 4-397, line 26, add lead-210.

Comment #: 9
Commenting Organization: U.S. EPA Commentor: Saric
Section #: A.2 Page #: NA Line #: NA Code:
Original General Comment #: 12

Comment: The original comment requested that fate and transport model groundwater flow directions and calibration targets for the GMA be presented. The flow direction and water level calibration are presented in Figure A.2-19A and the projected increase of U-238 groundwater concentrations is presented in Figure A.2-19B; however, the model groundwater concentrations as compared to actual concentrations measured in samples from monitoring wells at the site are not presented. U.S. DOE should present a comparison of the model groundwater concentrations to actual measured groundwater concentrations in the GMA.

Response: Agree.

Action: The text in Section A.2.8.3.3 has been modified to include the measured groundwater concentration for the calibration point at Well 2945. Figures A.2-19A and A.2-19B will also be updated. The corresponding text change has been made to section 5.4.4.3 of Section 5.0.

Comment #: 10
Commenting Organization: U.S. EPA Commentor: Saric
Section #: A.2 Page #: NA Line #: NA Code:
Original General Comment #: 13

Comment: The original comment stated that all groundwater contaminants of potential concern (CPC) were not modeled. The action referred to by U.S. DOE to clarify this comment (U.S. DOE comments A-53 and 5-27) actually refer to a laboratory contaminant issue. U.S. DOE should state or refer to the correct action that will resolve the CPC issue.

Response: The previous action for this comment erroneously referenced comments A-53 and 5-27. The original comment concerns the CPC screening process. Clarification of the CPC screening process is provided in the action for DOE comment number 48, in sections A.2.6, A.2.6.1, and A.2.6.2.

Action: See the Action for Comment No. 48. Also, a new section will be added to the text to clarify the last CPC screening step, review of the GMA groundwater data as is compares with the vadose zone modeling results.

The new section reads:

A.2.6.5 Groundwater Data Review

The vadose zone modeling results were compared against the Great Miami Aquifer data. If the model predictions were not in agreement with the Great Miami Aquifer data, model parameters, assumptions, and conceptual models were reviewed and modified accordingly. If the vadose zone model was refined, the vadose zone model calculations were repeated and the vadose zone model toxicity screening and the Great Miami Aquifer dilutions toxicity screening steps were repeated. This process was continued until the model predictions were in agreement with the field measured data. Detailed modeling in the Great Miami Aquifer was performed for the CPCs remaining from the Great Miami Aquifer dilution toxicity screening.

Figures A.2-13 and 5-16 will be updated to show where the vadose zone modeling occurs in the screening process, and to show a feedback path from the groundwater data review step.

A corresponding paragraph will be added to Section 5.4.2.4.

Comment #: 11
Commenting Organization: U.S. EPA Commentor: Saric
Section #: 4 Page #: 4-1 Line #: 5 Code:
New General Comment #: 1
Comment: In both summary tables and text, U.S. DOE presents non-surface soil COC contamination in terms of surface soil or "cross-media" COCs. This approach is confusing. U.S. DOE should revise the text to indicate why COCs are not defined and discussed in terms of battery- and media-specific COCs.

Response: Clarification will be added.
Action: The following text was added to Page 4-1, line 5, after Table 4-0:

"Based on the 1991 Amended Consent Agreement, the definition of Operable Unit 2 is waste materials, berms, and soils within the operable unit boundary. All other media (e.g., surface water, groundwater) is defined under another operable unit. Accordingly, the COCs in Operable Unit 2 RI/FS documents have been categorized as **surface soil** for the direct exposure to contaminated material/surface soil and **cross-media** for other media that would be impacted by contaminated material/soil in Operable Unit 2."

Comment #: 12
Commenting Organization: U.S. EPA Commentor: Saric
Section #: 4.0 Page #: NA Line #: NA Code:
New General Comment #: 2
Comment: Table 4-0 presents the COCs by subunit and media of concern. Throughout the remedial investigation (RI) report, U.S. DOE discusses the data in terms of COCs present in the media. A comparison of the COCs that are noted in these discussions versus those in Table 4-0 reveals some discrepancies. U.S. DOE should review the text for accuracy when discussing data results in terms of COCs.

Response: Agree. The text will be reviewed for accuracy.
Action: The text has been reviewed for accuracy. See Comment No. 27.

Comment #: 13
Commenting Organization: U.S. EPA Commentor: Saric
Section #: 4.0 Page #: NA Line #: NA Code:
New General Comment #: 3
Comment: U.S. DOE has presented evidence in Section 4.3.2 that the wastes held in the Lime Sludge Ponds are a source of radionuclide contamination in perched groundwater yet this likelihood has not been acknowledged in the discussion of groundwater sampling results (Section 4.3.4) or in the summary of Lime Sludge Pond sampling results (Section 4.3.6). U.S. DOE should revise the text to clearly indicate whether the Lime Sludge Ponds are or were sources of radionuclide groundwater contamination.

Response: Since there isn't clear evidence that the Lime Sludge Ponds had no impact on the perched groundwater the assumption can be made that the Lime Sludge Ponds had potential to impact the groundwater. The text in the perched groundwater section will be revised to indicate this potential exists.
Action: Page 4-146, add the following text to Line 30:

One of the most notable detections was 17.4 ug/l total thorium in downgradient well 1937. This may indicate that the Lime Sludge Ponds impacted the perched groundwater.

Comment #: 14
Commenting Organization: U.S. EPA Commentor: Saric
Section #: 4.2.4 Page #: 4-71 Line #: 22 and 23 Code:
Original Specific Comment #: 4

Comment: The revised text states that for the Solid Waste Landfill well 2027 is an upgradient 2000-series well in the Upper GMA. However, reviewing Figure 3-33 reveals that well 2027 is a downgradient 2000-series well located on the western edge of the Solid Waste Landfill. Reviewing Figure 4-6 reveals that the only upgradient 2000-series well for the Solid Waste Landfill is well 2949 with a total uranium concentration of 0.5 micrograms per liter (μg/L). The downgradient 2000-series wells had concentrations ranging from 0.5 to 4.7 μg/L. The revised text also states that the Upper GMA has not been impacted by total uranium from the Solid Waste Landfill. However, the discussion does not support this statement. The discussion supports the conclusion that the Upper GMA has been impacted by total uranium from the Solid Waste Landfill within the operable unit limits. The text should be revised accordingly.

Response: It is our belief that the reviewer of Figure 3-33 is mistaken. Well 2027 has an elevation of 522.5, which is the highest elevation on the figure. Also, the 522.4 contour line, which is the highest, is the closest to Well 2027. Taking both of the aforementioned into consideration, the conclusion has been drawn that Well 2027 is an upgradient well. Also, this well is downgradient of the Waste Pits which would indicate that the Waste Pits may be a contributor to the Upper GMA contamination. Well 2052 had a total uranium concentration of 10.1 ug/l; however this well is crossgradient and would not be impacted by the Solid Waste Landfill. The discussion in the revised text does not support the conclusion that the Upper GMA has been impacted by total uranium from the Solid Waste Landfill.

Action: No action.

Comment #: 15
Commenting Organization: U.S. EPA Commentor: Saric
Section #: 4.3.2 Page #: 4-131 Line #: 1 and 2 Code:
Original Specific Comment #: 16

Comment: The response action presented for the Lime Sludge Ponds in the comment response document differs from the actual revised text in the RI report. Also, the response action states that the K-65 slurry trench is believed to be a possible source for uranium and thorium detected in downgradient perched wells. However, both the K-65 slurry trench and the Lime Sludge Ponds are possible sources of the contamination. The perched groundwater flow is to the southwest as noted in the revised document in Figure 3-37. Well 1042, a downgradient perched groundwater well, is located west of downgradient perched groundwater well 1934. Well 1042 intercepts perched groundwater flow from the majority of the Lime Sludge Ponds and the K-65 slurry trench, while well 1934 intercepts perched groundwater from a small portion of the Lime Sludge Ponds and the K-65 slurry trench. The results of sampling for uranium and thorium in soil and perched groundwater for well 1042 are higher than are those for well 1934. The higher results for well 1042 could be attributed to the impact of the Lime Sludge Ponds as well as the K-65 slurry trench on well 1042. The text should be revised accordingly.

Response: The summary will be change to reflect that both the Lime Sludge Ponds and the K-65 slurry line trench are possible contributors to the perched ground water contamination.

Action: The text on Page 4-171, Lines 3 through 9, has been changed to:

"Elevated concentrations of uranium and thorium were detected in downgradient perched groundwater well. This may be due to both the Lime Sludge Ponds and the K-65 slurry line trench impacting the perched groundwater."

Comment #: 16
Commenting Organization: U.S. EPA Commentor: Saric
Section #: 4.4.3 Page #: 4-218 Line #: 13 to 15 Code:
Original Specific Comment #: 26

Comment: For the Inactive Flyash Pile, the revised text states that "elevated concentrations of uranium exist in the surface water from the drainage west of the Inactive Flyash Pile, and is contributing to the contamination of the aquifer." The text should be revised to state specifically which aquifer is impacted to avoid ambiguity.

Response: The text will be changed to indicate the Great Miami Aquifer.

Action: Page 4-249, line 7, replace aquifer with Great Miami Aquifer.

Comment #: 17
Commenting Organization: U.S. EPA Commentor: Saric
Section #: 4.4.6 Page #: 4-255 Line #: NA Code:
Original Specific Comment #: 28

Comment: The summary for the Inactive Flyash Pile was to be expanded to discuss the COCs found in surface water, sediment, perched water and the Great Miami Aquifer. Reviewing the summary reveals that a discussion of the following is omitted from the summary for the Inactive Flyash Pile; metals and organics for surface water, metals for sediment, metals and organics for perched water, and metals and organics for the Great Miami Aquifer. The text should be revised accordingly to include these items in the summary.

Response: The text was expanded to include COCs in each of the identified media. However, there were no COCs determined for surface water and sediment, nor metal or organic COCs for groundwater. Please refer to Table 4-0 for a summary of COCs.

Action: No action.

Comment #: 18
Commenting Organization: U.S. EPA Commentor: Saric
Section #: 4.5.6 Page #: 4-329 Line #: 11 to 17 Code:
Original Specific Comment #: 36

Comment: The revised text discusses the results of organic testing on Phase I and II groundwater sampling for the South Field. The text should be revised to state that these results are for the 2000-series groundwater wells. Also, the revised text states that the Phase II detections included diethyl phthalate tributyl phosphate. According to Tables 4-57 and 4-58, this compound was not detected during Phase II sampling and the text should be revised accordingly. Finally, the revised text states that the organics detected during the Phase I and II sampling events are common laboratory contaminants. A number of the organics such as the phthalate compounds and acetone may possibly be laboratory contaminants. However, it is unlikely that others such as 1,1,1-trichloroethane and 1,1-dichloroethane are laboratory contaminants. It is more likely that other compounds that are detected such as 1,1,1-trichloroethane and 1,1-dichloroethane are a result of operations at OU2. The text should be revised accordingly.

Response: The text will be changed to reflect the requested changes.

Action: Page 4-321, line 23, the following has been inserted before "groundwater": "2000-series wells."

Page 4-321, line 28, diethyl phthalate and tributyl phosphate has been deleted.

Page 4-322, line 1, "Some of these contaminants" has been added to the beginning of the sentence.

Page 4-322, line 3, the following sentence has been added "However, 1,1,1-trichloroethane and 1,1-dichloroethane may be present due to placement of wastes from maintenance activities, or other activities where solvents were used."

Comment #: 19
Commenting Organization: U.S. EPA Commentor: Saric
Section #: A.1.7.1 Page #: A-1-34 Line #: NA Code:
Original Specific Comment #: 67

Comment: The original comment discussed extending to the north the stream area where the till beneath Paddys Run is absent and therefore is a source of contamination to the GMA. Figures A.1-6A and A.1-6B were included in the revised OU2 RI to address this comment. However, on Figure A.1-6B, the area of Paddys Run acting as a source still does not appear to be correct. The area of Paddys Run acting as a source should apparently extend to the point where Paddys Run is adjacent to the Inactive Flyash Pile. This additional source area of Paddys Run may not affect the overall contaminant concentrations in the GMA; however, it should still be defined so it is addressed in remediation scenarios for OU2. U.S. DOE should revise Figure A.1-6B to include the additional area of Paddys Run as a source for contamination.

Response: Agree.
Action: Figure A.1-6B will be modified to indicate the area of infiltration through Paddys Run from the Inactive Flyash Pile/South Field extends to the point adjacent to the Inactive Flyash Pile.

Comment #: 20
Commenting Organization: U.S. EPA Commentor: Saric
Section #: A.2.8.2.1 Page #: A-2-135 Line #: NA Code:
Original Specific Comment #: 82
Comment: The original comment stated that lead, radium-226, radium-228, and uranium isotopes (shown in Table A.1-14) should be considered as groundwater CPCs for the Active Flyash Pile. The response to this comment stated that modeling results for all uranium isotopes can be determined using U-238 scaling ratios. However, modeling results for lead, radium-226, and radium-228 were not included in the discussion. U.S. DOE should state why these additional CPCs were not included in the groundwater fate and transport modeling.

Response: Many of the CPCs listed on Table A.1-14 were excluded from groundwater fate and transport modeling for the reasons given in footnotes c, d, and e. Only the CPCs having no footnotes are included in Tables A.2-47 and A.2-48. Uranium-234, uranium-235/236, and uranium-total are not included in Tables A.2-47 and A.2-48 because concentrations of these constituents are determined from U-238 scaling ratios rather than being modeled directly. For example, Table A.1-14 indicates that the Active Flyash Pile CPCs arsenic, beryllium, neptunium-237, uranium-234, and uranium-238 are CPCs requiring groundwater modeling. These CPCs are listed on Table A.2-48, with the exception of U-234. U-234 is determined from the modeling for U-238.
Action: No action.

Comment #: 21
Commenting Organization: U.S. EPA Commentor: Saric
Section #: 3.4.2 Page #: 3-93 Line #: 22 to 24 Code:
New Specific Comment #: 1
Comment: The text gives a range of hydraulic conductivity (K) values for the glacial overburden. U.S. DOE should indicate whether these values represent K values for the sand lenses, the glacial till or if the values are some sort of average for both.

Response: These K values are for the sand lenses. The text will be changed to reflect this.
Action: Page 3-93, line 23 has been changed to "...average hydraulic conductivity for the sands in the glacial overburden..."

Comment #: 22
Commenting Organization: U.S. EPA Commentor: Saric
Section #: 4.1.1 Page #: 4-5 Line #: 12 to 15 Code:
New Specific Comment #: 2
Comment: The text states that radionuclide and organic contamination is not anticipated at the Lime Sludge Ponds as a result of the processes that generated the lime sludge. However, Section 4.3, which presents the Lime Sludge Pond investigation results, indicates that Lime Sludge Pond sludges are likely sources of radionuclide and organic contamination. This discrepancy should be resolved and the RI report should clearly state whether these sludges are contaminant sources for the various media of concern.

Response: The intent of the discussion of Page 4-5 is to state that from previous operation activities mentioned one would not normally expect to find organic or radionuclide contamination. The actual contamination was found during the investigation and is discussed later in Section 4.3.
Action: We will delete text on expectation of contaminant in the Lime Sludge Ponds on Page 4-5.

Comment #: 23
Commenting Organization: U.S. EPA Commentor: Saric
Section #: 4.1.2 Page #: 4-6 Line #: 19 to 21 Code:
New Specific Comment #: 3
Comment: The text states that individual samples whose constituent concentrations exceed the respective 95th percentile background concentration are identified as being inconsistent with background data. U.S. DOE should revise the text to address how these "outliers" were treated in the statistical calculations of background values.

Response: The "individual samples" referred to in the text are those collected during the OU2 RI investigation and are separate from those collected for background. These OU2 "individual samples" were compared to background and not used in the statistical calculations of background values.
Action: No action.

Comment #: 24
Commenting Organization: U.S. EPA Commentor: Saric
Section #: 4.1.2 Page #: 4-9 Line #: NA Code:
New Specific Comment #: 4
Comment: Footnote "d" to Table 4-1A states that fission products detected at the site are the result of atmospheric fallout from weapons testing. Several Fernald Environmental Management Project (FEMP) documents, including Line 32 on Page 4-30 of the OU2 RI report, have indicated that FEMP accepted and processed materials containing small amounts of fission products. U.S. DOE should provide further evidence supporting its claim that fission products, many that are found in subsurface environmental media, are related to weapons testing and not to production activities.

Response: The text and footnote on Table 4-1A will be changed to reflect that these fission products could be from either fallout and/or reprocessing activities.

Action: Page 4-9, Footnote d, was changed to "...in the environment may be due to atmospheric releases of radiation (e.g. weapons testing) and/or reprocessing activities. This radionuclide..."

Comment #: 25
Commenting Organization: U.S. EPA Commentor: Saric
Section #: 4.2.2 Page #: 4-44 Line #: 24 to 25 Code:
New Specific Comment #: 5

Comment: The text states that no single hot spot source area exists for surface or subsurface soils at the Solid Waste Landfill. However, Lines 29 to 33 on Page 4-95 discuss individual hot spot areas within Solid Waste Landfill subsurface soils. Additionally, U.S. DOE has presented data (Table 4-2A) identifying several trenches and borings where highly radioactive "yellow colored material" is present. The text should be revised to address this discrepancy.

Response: The intent of this sentence was to state the there isn't just one single spot contributing to the contamination but several. The text will be rewritten to clarify the statement.

Action: Page 4-44, Line 24 - 25, the last sentence was replaced with the following text: "Therefore, as previously stated, there isn't just a single hot spot source area but several contributing to the whole.

Comment #: 26
Commenting Organization: U.S. EPA Commentor: Saric
Section #: 4.2.4 Page #: 4-94 Line #: 10 to 22 Code:
New Specific Comment #: 6

Comment: Blaming poor well construction in the adjacent perched aquifer well 1037, U.S. DOE rejects detection of uranium isotopes, strontium-90, and carbon disulfide in well 2037 in an attempt to support the argument that the landfill is not affecting the GMA in terms of these constituents. The data presented seems to suggest that well 1037 is screened in the GMA and not in the perched aquifer. If this is true, then the argument that contaminated perched groundwater has reached the GMA (in the area of well 2037) via well 1037 is not relevant. U.S. DOE should provide further evidence that the contamination observed in well 2037 is not resulting from the Solid Waste Landfill.

Response: A localized impact on the Great Miami Aquifer may be due to a poorly constructed well lending a pathway to contaminant migration. This impact must be a localized phenomenon since the downgradient wells didn't have the contamination. The text will be changed to reflect this. Additionally, fate and transport modeling was used for determining groundwater exposure concentrations and subsequent risk issues to determine the need for remdiation due to impact on groundwater.

Action: Page 4-94, lines 19 through 22 have been replaced with the following text:
"These data may indicate that leakage from Well 1037 may be influencing water quality in Well 2037. The downgradient wells didn't exhibit this contamination. This would indicate a localized impact on the upper GMA from the landfill due to poor well construction. Well 1037 has been plugged and abandoned."

Comment #: 27
Commenting Organization: U.S. EPA Commentor: Saric
Section #: 4.2.5 Page #: 4-95 Line #: 17 to 18 Code:
New Specific Comment #: 7
Comment: The summary lists surface soil COCs by elemental names, instead of by isotopes, as is done in the supporting text. For consistency, COCs should be summarized in terms of their specific isotopes.

Response: The text will be changed stating the isotopes.
Action: The text on Page 4-95, lines 18 through 21, has been changed to "The surface soil COCs detected above background in subsurface samples include antimony, arsenic, beryllium, neptunium-237, plutonium-238, radium-226, radium-228, thorium-228, thorium-232, uranium-234, uranium-235/236, uranium-238, benzo(a)anthracene, benzo(a)pyrene, benzo(b)fluoranthene, dibenzo(a,h)anthracene, and indeno(1,2,3-cd)pyrene."

Page 4-95, lines 26 through 29, the sentence has been replaced with the following text: "The surface soil COCs detected above background in the subsurface samples include antimony, arsenic, beryllium, neptunium-237, plutonium-238, plutonium-239/240, radium-224, radium-226, radium-228, thorium-228, thorium-230, thorium-232, uranium-234, uranium-235/236, uranium-238, benzo(a)anthracene, benzo(a)pyrene, benzo(b)fluoranthene, dibenzo(a,h)anthracene, and indeno(1,2,3-cd)pyrene."

Page 4-95a, line 10, neptunium, plutonium, uranium have been replaced with "neptunium-237, plutonium-238, strontium-90, uranium-234, uranium-235/236, uranium-238."

Page 4-97, line 1, radium, thorium, and uranium were replaced with "radium-226, thorium-228, thorium-230, thorium-232, uranium-234, uranium-235/236, and uranium-238."

Page 4-97, line 8, uranium and thorium have been replaced with "uranium-234, uranium-235/236, uranium-238, thorium-232."

Page 4-170, line 37 through 38, has been changed to "The surface soil COCs cesium-137, radium-226, radium-228, thorium-228, thorium-230, thorium-232, uranium-238, and total uranium were detected above background in the subsurface samples."

Page 4-170a, lines 45 through 46, have been changed to "In perched groundwater, the surface soil COCs radium-226, thorium-228, thorium-230, thorium-232, uranium-238, and uranium total were detected above background."

Page 4-171, lines 25 through 26, have been changed to "The surface soil COCs thorium-228, thorium-232, uranium-238, and total uranium were detected above background in 2000 series wells in the regional aquifer."

Page 4-248, lines 28 through 30, were changed to "...surface soil COCs arsenic, radium-228, thorium-228, thorium-232, and dibenzo(a,h)anthracene."

Page 4-249, lines 24 through 27, were changed to "...surface soil COCs arsenic, radium-228, thorium-228, thorium-232, and dibenzo(a,h)anthracene."

Page 4-250, lines 15 through 18, were changed to "In the Upper Great Miami Aquifer (2000-series wells) no surface soil COCs were detected. However, uranium-234, uranium-235/236, uranium-238, total uranium, neptunium-237, and plutonium-238 were detected above background suggesting a potential impact on the Great Miami Aquifer."

Page 4-322, lines 26 through 28, were changed to "...arsenic, beryllium, neptunium-237, radium-226, radium-228, thorium-228, thorium-230, thorium-232, uranium-234, uranium-235/236, uranium-238, total uranium, benzo(a)anthracene..."

Page 4-322, lines 36 through 37, were changed to "...were beryllium, neptunium-237, radium-226, thorium-228, thorium-230, thorium-232, uranium-234, uranium-235/236, uranium-238, and total uranium. Other..."

Page 4-322, lines 44 through 45, were changed to "...were radium-226, thorium-230, thorium-232, uranium-234, uranium-235/236, uranium-238, and total uranium. Well 2945..."

Page 4-397, lines 26 through 27, were changed to "...nonsource, are arsenic, beryllium, neptunium-237, radium-226, radium-228, thorium-228, and thorium-232. Other..."

Page 4-397, line 42, was changed to "...beryllium and neptunium-237."

Page 4-398, line 6, was changed to "neptunium-237. Other..."

Page 4-398, line 7, was changed to "...background were plutonium-238, strontium-90, uranium-234, uranium-235/236, and uranium-238."

Page 4-398, lines 15 through 16, were changed to "...Aquifer are thorium-232 and thorium-228. Additional radionuclides radium-226, uranium-234, uranium-235/236, and uranium-238 were detected above background. Due..."

Comment #: 28
Commenting Organization: U.S. EPA Commentor: Saric
Section #: 4.2.6 Page #: 4-97 Line #: 7 to 13 Code: .
New Specific Comment #: 8
Comment: The text states that uranium, thorium, or strontium-90 were not detected in downgradient Solid Waste Landfill GMA wells. However, strontium-90 was detected above background in both downgradient wells, and uranium 235/236 was detected in downgradient well 2947. This discrepancy and its implications should be addressed in the text.

Response: The text will be changed to address the discrepancy. The implications in the text remain the same: that impact to the GMA may have occured.
Action: Page 4-97, lines 12 and 13, the sentence has been replaced with the following text: "Downgradient wells in the regional aquifer had concentrations of radium-226, plutonium-238, strontium-90, and uranium 235/236 above background."

Comment #: 29
Commenting Organization: U.S. EPA Commentor: Saric
Section #: 4.3.2 Page #: 4-100 Line #: 26 to 27 Code:
New Specific Comment #: 9
Comment: The text states that surface soil contamination has resulted from the K-65 slurry trench and spillage from the haul roads. Without direct evidence of these contamination pathways, surface soil contamination via aeolian transport of contaminated sludges cannot be ruled out as sources. Also, it is difficult to conclude that contaminants contained in steel pipes inside the trench can affect surface soils. This issue should be discussed further.

Response: Aeolian transport of contaminated sludges is difficult to defend since the sludges and surface sludges in their present configuration have high moisture contents and would require a much greater reduction in moisture to become potentially transportable via wind. The text is not suggesting that the surface soils were impacted by contaminants in steel pipes, but is suggesting that the contaminants within the pipes could have leaked from the pipes and that additional contamination could have resulted through maintenance activities; i.e., the removal of the damaged pipe, the placement of the removed pipe on the surface adjacent to the trench with subsequent leakage of the residual contaminated material onto the surface. There has been verbal confirmation of such maintenance activities for the K-65 slurry trench. The text will be modified for more clarification.
Action: Page 4-108, line 1, the following text has been added after "...in the former Production Area.": "There has been verbal confirmation of the type of maintenance activities occurring for the K-65 slurry trench; i.e., the removal of damaged pipe from the trench and the placement of this pipe on the surface adjacent to the trench with possible subsequent leakage of residual contaminated material onto the surface."

Comment #: 30
Commenting Organization: U.S. EPA Commentor: Saric
Section #: 4.3.2 Page #: 4-127 Line #: 1 to 2 Code:
New Specific Comment #: 10
Comment: U.S. DOE suggests that a possible scenario for the elevated subsoil radionuclide concentrations underlying the lime sludge wastes is that soils were already contaminated prior to installation of the Lime Sludge Ponds. Existing data do not support this scenario. U.S. DOE should acknowledge the more likely scenario that this contamination is the result of leaching of the lime sludge wastes.

Response: The existing data does support the stated scenario as one possibility. However, it could also be possible that a more appropriate scenario would be the one already stated in the text in conjunction with the leaching of contaminated lime sludge. The text will be edited to include the later scenario.

Action: Page 4-127, line 2, the following text has been added: "However, contamination or additional contamination to the soil below the lime sludge may have occurred from the leaching of the lime sludge."

Comment #: 31
Commenting Organization: U.S. EPA Commentor: Saric
Section #: 4.3.2 Page #: 4-127 Line #: 23 to 24 Code:
New Specific Comment #: 11
Comment: The text states that the west berm and areas north of the north Lime Sludge Pond are possible sources of organic compounds detected in the sludge samples. While these areas may be contributing to the observed organic contaminations, because the organic contamination increases with depth as noted in samples 1947, 1961, 1962, and 1963 this suggests that the sludge is the primary source of this contamination. This issue should be discussed further in the text.

Response: The berms were in place prior to the disposal of lime sludge. A possible scenario for the increased contamination with depth is that the berms were already contaminated prior to lime sludge disposal. Over time, surface water running off into the ponds and leaching from the contaminated berms caused the contamination at depth. Also, as time went on the levels of berm surface contamination decreased due to this run-off. The text will be edited to reflect this discussion. In addition, the trasnport modeling in Section ___ used the 95 percent UCL of the mean calculated from both the lime sludge and the berm together.

Action: Page 4-127, line 26, the following text has been added: "Contamination increased with depth in locations 1947, 1961, 1962, and 1963. The berms were constructed prior to lime sludge disposal. If the berms were constructed of contaminated material, then it is likely that surface water ran-off into the ponds from the contaminated berms casing the contamination at depth due to leaching. Also, as time went on the levels of berm surface contamination decreased due to this run-off."

Comment #: 32
Commenting Organization: U.S. EPA Commentor: Saric
Section #: 4.3.2 Page #: 4-128 Line #: 33 to 34 Code:
New Specific Comment #: 12
Comment: The text states that the absence of trichloroethane (1,1,1-TCA) in toxicity characteristic leaching procedure (TCLP) results confirms that the facility's wastewater exemption was applicable for on-site use of small amounts of solvent. The purpose of this statement is not clear. U.S. DOE should clarify the discussion regarding 1,1,1-TCA.

Response: The purpose of this statement was to support a previous RCRA determination that the Lime Sludge Ponds are not a Hazardous Waste Management Unit due to receiving wastewater with TCA above specified levels. It is not necessary for this discussion. Therefore, it will be deleted from the text.
Action: Page 4-128, lines 32 through 34, the last sentence "In addition, no trichloroethane..." has been deleted.

Comment #: 33
Commenting Organization: U.S. EPA Commentor: saric
Section #: 4.3.4 Page #: 4-146 Line #: 20 to 22 Code:
New Specific Comment #: 13
Comment: The text suggests that the K-65 Slurry trench may be the source of uranium contamination in the perched groundwater. However, the data support an equally strong argument that the Lime Sludge Ponds are the source of this contamination. Therefore, the issue of perched groundwater contamination sources should be addressed further in the text.

Response: Please refer to Comment No. 13.
Action: Refer to action on Comment No. 13.

Comment #: 34
Commenting Organization: U.S. EPA Commentor: Saric
Section #: 4.4.4 Page #: 4-225 Line #: 30 to 35 Code:
New Specific Comment #: 14
Comment: U.S. DOE suggests that the source of uranium contamination in perched groundwater is upgradient of the hydropunch locations. However, the hydropunch data and the chemical data for the flyash clearly suggest that the Inactive Flyash Pile is the source of perched groundwater contamination. The text should be revised to discuss this issue further.

Response: The text will be edited to clarify where the possible source may be.
Action: Page 4-225, line 35, the following text was added to the last sentence: "...in the northern portion of the Inactive Flyash Pile."

Comment #: 35
Commenting Organization: U.S. EPA Commentor: Saric
Section #: 4.4.4 Page #: 4-225 Line #: 31 to 35 Code:
New Specific Comment #: 15
Comment: The text states that the cited hydropunch locations were not associated with waste materials. However, the cited hydropunch samples were collected at locations where waste is between 5 and 20 feet thick. The text should be revised to resolve this discrepancy.

Response: The reference to waste material was intended to describe material other than fill and flyash; i.e., material that may be associated with the production area processes. The text will be edited to make the distinction.
Action: Page 4-225, line 32, the text has been edited to read "These Hydropunch™ samples were collected from intervals where no waste material other than fly ash or fill were identified. This suggests..."

Comment #: 36
Commenting Organization: U.S. EPA Commentor: Saric
Section #: 4.4.4 Page #: 4-234 Line #: 6 to 11 Code:
New Specific Comment #: 16
Comment: The text initially states that perched groundwater in the Inactive Flyash Pile flows through waste materials containing uranium at locations upgradient of the hydropunch locations. However, the text concludes by saying that the northern portion of the Inactive Flyash Pile may be the source of uranium contamination. The text should be revised to clarify whether uranium waste is located within the Inactive Flyash Pile or upgradient of the pile.

Response: The text will be clarified.
Action: Page 4-234, line 7, the following text has been added after "...through waste materials...": "...in the Inactive Fly Ash Pile...".

Comment #: 37
Commenting Organization: U.S. EPA Commentor: Saric
Section #: 4.4.6 Page #: 4-249 Line #: 4 to 15 Code:
New Specific Comment #: 17
Comment: This text summarizes surface water and sediment contamination at the Inactive Flyash Pile. Because metals contamination is not discussed, the text should be revised to address this contamination.

Response: Arsenic was the only identified surface soil COC and was not detected in the surface water or sediment. Please refer to Table 4-0 for list of COCs.
Action: No action.

Comment #: 38
Commenting Organization: U.S. EPA Commentor: Saric
Section #: 4.5.2 Page #: 4-263 Line #: NA Code:
New Specific Comment #: 18
Comment: Table 4-48B summarizes perched groundwater contamination in terms of uranium. However, the issue of metals and organic contamination has not been addressed. U.S. DOE should provide this information or should identify the issue as an outstanding data gap.

Response: Table 4-48B is titled "Lead Concentrations in Vertical Borings at the FEMP" and summarizes lead contamination in soils in the Firing Range as opposed to uranium in perched groundwater. Also, the Firing Range is in an area beyond the perched water zone. Please note that the perched groundwater contamination for the South Field is discussed in Section 4.5.4.
Action: No action.

Comment #: 39
Commenting Organization: U.S. EPA Commentor: Saric
Section #: 4.5.2 Page #: 4-263 Line #: NA Code:
New Specific Comment #: 19
Comment: Table 4-48B does not provide data from boring SP-7. The table should be revised to provide this information.

Response: Table 4-48B has been revised to include the data from SP-7.
Action: The SP-7 data has been added to Table 4-48B.

Comment #: 40
Commenting Organization: U.S. EPA Commentor: Saric
Section #: 4.5.2 Page #: 4-277 Line #: 1 to 2 Code:
New Specific Comment #: 20
Comment: The text cites wipe sample data to support the conclusion that contaminated materials originated from process spillage and leaking prior to being deposited in the South Field. However, this data is not provided in the report. The wipe sample data should be provided in the revised RI report.

Response: The wipe samples that are referred to in the text are samples routinely conducted as part of the on-site radiological safety process. The analysis is generally conducted using portable field instruments or conducting on-site laboratory analysis. This data is not defensible for the purpose of this report. The sentence containing the reference to the wipe samples will be deleted since it does not effect the statement presented.
Action: Page 4-277, line 1 and 2, the sentence "Wipe samples indicate that ...." has been deleted.

Comment #: 41
Commenting Organization: U.S. EPA Commentor: Saric
Section #: 4.5.3 Page #: 4-294 Line #: 1 to 5 Code:
New Specific Comment #: 21
Comment: U.S. DOE concludes, based on the presence of chloride and fluoride, that contaminated drainage water results from perched water and not from rainwater (leachate). However, the presence of high chloride levels is widely used to indicate landfill leachate contamination. The data appears to implicate percolation of rainwater filtering through waste materials (thereby forming leachate) as the dominant source of this contamination. The text should be revised to address this issue.

Response: The text will be revised to include a language clarifying that rainwater is percolating through contaminated material.
Action: Page 4-294, line 1 through 5, the text after "...not in the sediment." has been changed to "This suggests that the drainage water (water seeping in the South Field) is rainwater that has percolated downward through contaminated material and leached the contaminants; i.e., chloride, fluoride, and uranium. Also, these data support the belief that drainage water samples containing elevated uranium are representative of perched groundwater.

Comment #: 42
Commenting Organization: U.S. EPA Commentor: Saric
Section #: 6.0 Page #: NA Line #: NA Code:
Original General Comment #: 1
Comment: Several general and specific comments are made regarding Appendix B, which contains the "details" of the baseline risk assessment. Therefore, if Appendix B is revised in response to those comments, this section should also reflect the changes because it summarizes the results of the baseline risk assessment.

Response: Agreed.
Action: Section 6.0 was updated to reflect the changes made in Appendix B.

Comment #: 43
Commenting Organization: U.S. EPA Commentor: Saric
Section #: B.3.0 Page #: NA Line #: NA Code:
New General Comment #: 1
Comment: Several inconsistencies were found among tables in Attachment B.III that list chemicals of potential concern (CPC), tables in Section B.3.0 that present risk calculation, and tables in Section B.4.0 that present chemicals of concern (COC). (Specific examples are cited as specific comments.) Therefore, these tables should be reviewed to eliminate any inconsistencies among them and to enable a constituent to be traced from its selection as a CPC to its establishment as a COC.

Response: Agreed.
Action: The tables will be compared and any inconsistencies corrected.

Comment #: 44
Commenting Organization: U.S. EPA Commentor: Saric
Section #: 6.3 Page #: 6-23 Line #: 7 Code:
Original Specific Comment #: 3
Comment: This line has been revised to differentiate between CPCs and COCs by stating that COCs are CPCs that remain a concern after the risks are calculated. To clearly make this distinction, U.S. Department of Energy (U.S. DOE) should present the risk levels that determine whether the CPC is significant enough to become a COC.

Response: Agreed.
Action: The sentence "COCs are constituents (i.e. CPCs) which remain a concern after baseline risks have been calculated." has been changed to read; "COCs are constituents (i.e. CPCs) which remain a concern (greater than $1x10^{-6}$ ILCR or 0.2 HI) after baseline risks have been calculated."

Comment #: 45
Commenting Organization: U.S. EPA Commentor: Saric
Section #: 6.3.6 Page #: 6-61 Line #: NA Code:
Original Specific Comment #: 4
Comment: The original comment recommended that U.S. DOE specify the route(s) contributing to significant risk. However, this revision was not made. U.S. DOE should specify which routes result in significant risk and should revise the text accordingly.

Response: The routes will be added.
Action: The text on Page 6-61 and 6-61a has been modified to include routes.

Comment #: 46
Commenting Organization: U.S. EPA Commentor: Saric
Section #: 6.4 Page #: 6-81 to 6-89 Line #: 11 Code:
Original Specific Comment #: 5
Comment: A variety of uncertainties are discussed in this section. However, several uncertainties, such as potential incomplete characterization of contamination and vadose zone modeling, are cited without discussing how they may affect the final risk estimate. U.S. DOE should attempt, whenever possible, to estimate how any identified uncertainties may affect the final risk estimate. If such an estimate cannot be made for a particular parameter, then this should be clearly stated in the text.
Also, a reference should be cited for the Rn-222 inhalation slope factor presented on Page 6-87, Line 24. The value presented, 7.7E-12 picoCuries $(pCi)^{-1}$, is inconsistent with the value of 7.7E-13 pCi^{-1} presented in the Health Effects Assessment Summary Tables (HEAST) that the U.S. Environmental Protection Agency (U.S. EPA) published in March 1993.

Response: 1) The text will be modified to discuss the magnitude of uncertainties.
2) The HEAST value for radon with daughters is $7.7x10^{-12}$ pCi^{-1}, the value for radon without daughters is $7.3x10^{-13}$ pCi^{-1}. The RI report considered radon with its daughters, therefore using the $7.7x10^{-12}$ pCi^{-1} value.
Action: 1) See text changes on Pages 82 through 84.
2) None.

Comment #: 47
Commenting Organization: U.S. EPA Commentor: Saric
Section #: B.2.4A.2.1 Page #: B-2-67-B-2-69 Line #: NA Code:
Original Specific Comment #: 6
Comment: Several of the constituents presented in Table B.2.2.F, such as di-n-butylphthalate, are not footnoted to specify the criteria for their removal during the toxicological screening. The table should be revised so that all constituents listed in the table are footnoted to specify the criteria for their removal.

Response: The parameters Di-n-butyl-phthalate, Diethyl phthalate, and Bis(2-Ethylhexyl)phthalate should not be listed in Table B.2.2.F because they were not screened out in this step. The parameters should be listed in Table B.2-2I instead.
Action: The parameters were removed from Table B.2.2.F and listed in Table B.2-2I.

Comment #: 48
Commenting Organization: U.S. EPA Commentor: Saric
Section #: B-II Page #: NA Line #: NA Code:
Original Specific Comment #: 20
Comment: Many of the references in this section are incomplete, inconsistent, or missing from the final reference list. For example, references to Leonard (1988), Bensted (1967), Wrenn et.al. (1987), and Yuile (1973) are cited in the text but are not included in the reference list. This section should be fully reviewed and thorough and comprehensive referencing should be provided.

Response: All references have been reviewed and corrected as appropriate.
Action: The references in the document have been corrected and reference lists have been updated.

Comment #: 49
Commenting Organization: U.S. EPA Commentor: Saric
Section #: 6.2.1 Page #: 6-5 Line #: NA Code:
New Specific Comment #: 1
Comment: Several inconsistencies were identified between Figure 2, the General Conceptual Site Model and Table 6-1, the Generic Description of Exposure Scenario and Exposure Point Concentrations. For example, Figure 2 shows an off-property farmer receptor under private land ownership, while Table 6-1 does not show such a receptor. Also, Figure 2 shows a "household" Great Miami River (GMR) user, while Table 6-1 presents a "residential" GMR user. Figure 2 and Table 6-1 should be revised to eliminate all inconsistencies.

Response: Agreed. Table 6-1 should contain an off-property farmer under the future private ownership scenario, and the term household should be changed to be residential. These changes affect Figure B.2-2 and Table B.2-1 as well.
Action: These changes have been made in Table 6-1.

Comment #: 50
Commenting Organization: U.S. EPA Commentor: Saric
Section #: 6.2.1.2 Page #: B-2-17a Line #: NA Code:
New Specific Comment #: 2
Comment: The page following Page 6-11 is numbered as "B-2-17a." This page is apparently misnumbered and should be renumbered to be consistent with this section.

Response: The page was misnumbered and should be 6-11a.
Action: The page number was changed to 6-11a.

Comment #: 51
Commenting Organization: U.S. EPA Commentor: Saric
Section #: 6.3 Page #: 6-24 Line #: NA Code:
New Specific Comment #: 3
Comment: Table 6-7 lists uranium-total as a COC for beef/milk and homegrown produce affected by groundwater. However, Table B.3.1-30 does not show uranium-total with a hazard index (HI) greater than 1 for this pathway. Either the text or table should be revised to eliminate this inconsistency.

Response: Table B.3.1-30 is a carcinogenic risk table. Table B.3.1-31 is a noncarcinogenic table and shows uranium-total as a working potential hazard for homegrown produce for the on-property resident child.
Action: None.

Comment #: 52
Commenting Organization: U.S. EPA Commentor: Saric
Section #: 6.3.1 Page #: 6-27 Line #: 6 Code:
New Specific Comment #: 4
Comment: This line presents a carcinogenic risk from soil of 6.9E-05 to the groundskeeper. However, Table B.3.1-2B presents 6.9E-05 as the total radiologic risk and the total carcinogenic risk to the groundskeeper from soil as 7.95E-05. The text or table should be revised to eliminate this inconsistency.

Response: Agreed. The number in the text is incorrect.
Action: The text has been modified to reflect the correct value.

Comment #: 53
Commenting Organization: U.S. EPA Commentor: Saric
Section #: 6.3.2 Page #: 6-33 Line #: NA Code:
New Specific Comment #: 5
Comment: Table 6-11 does not list tributyl-phosphate as a COC for beef and milk and homegrown produce affected by groundwater. However, Table B.3.2-35 presents an HI of 1.0 for the off-property resident child's ingestion of "H_2O" affected homegrown produce. The text or table should be revised to eliminate this inconsistency.
Also, line 38 currently states that no hazard was associated with the groundskeeper. This line should be revised to state that a noncarcinogenic risk was not identified for the receptor.

Response: Table B.3.2-35 is missing NAs for tributyl phosphate. The 1.0 HI is for uranium total.
Action: NAs will be added to the table for clarity. Noncarcinogenic risks have been defined for the groundskeeper in Table B.3.2-32.

Comment #: 54
Commenting Organization: U.S. EPA Commentor: Saric
Section #: 6.3.3 Page #: 6-42 Line #: NA Code:
New Specific Comment #: 6
Comment: Table 6-15 does not list U-235/236 as a COC for ingestion of homegrown produce affected by groundwater. However, Table B.3.3-31 presents a risk of 5.9E-06 to the on-property resident farmer (reasonable maximum exposure (RME) via this pathway. Either the text or the table should be revised to eliminate this inconsistency.

Response: Agreed. Table 6-15 is missing U-235/236.
Action: The table will be corrected to include U-235/236.

Comment #: 55
Commenting Organization: U.S. EPA Commentor: Saric
Section #: B2.4A.2.3 Page #: B-2-84 to B-2-93 Line #: NA Code:
New Specific Comment #: 7
Comment: Table B.2-2H presents inhalation carcinogenic slope factors (CSF) and inhalation reference doses (RfD). However, EPA's Integration Risk Information System (IRIS) currently presents only inhalation unit risks and reference concentrations. Therefore, the table should be footnoted to identify the source of the CSFs and RfDs presented in the table.

Response: The inhalation CSFs and RfDs were calculated from unit risk values and reference concentrations taken from IRIS.
Action: A footnote will be provided in Table B.2-2H to identify the calculated values.

Comment #: 56
Commenting Organization: U.S. EPA Commentor: Saric
Section #: B.2.4A.2.3 Page #: B-2-94-B-2-99 Line #: NA Code:
New Specific Comment #: 8
Comment: Table B.2.2I lists constituents eliminated from further evaluation based on a comparison to preliminary remediation goals (PRG). However, the table does not list or reference the concentration that was compared with the PRG. The table should be revised to clearly present or reference the concentration that was compared to each PRG.

Response: Agreed.
Action: Table will be corrected to contain a reference to the CPC table in Appendix B.III.

Comment #: 57
Commenting Organization: U.S. EPA Commentor: Saric
Section #: B.2.4.2 Page #: B-2-116 Line #: NA Code:
New Specific Comment #: 9
Comment: The ingestion rate values presented in Table B.2-3A for ingestion of home produced meats and ingestion of milk do not correspond with values presented in the cited reference. These values should be reviewed and any discrepancies eliminated. Also, footnotes "l" and "m" to this table are missing. Either footnotes "l" and "m" should be added or the footnotes should be relettered appropriately.

Response: Page 2-27 of the Exposure Factor Handbook describes a 75 g/day intake for beef and 300 g/day intake for dairy products. When the 0.101 kg/day intake (IR) for beef is multiplied by the 0.75 fractional intake (FI), the result is 0.075 kg/day or 75 g/day. When the 0.4 kg/day intake (IR) for milk is multiplied by the 0.75 fractional intake (FI), the result is 0.3 kg/day or 300 g/day. The footnotes l and m are not referenced in the table, and the footnotes should be changed.
Action: Footnotes will be corrected to accurately reflect the references made in the table.

Comment #: 58
Commenting Organization: U.S. EPA Commentor: Saric
Section #: B.2.4.2 Page #: B-2-134 Line #: NA Code:
New Specific Comment #: 10
Comment: Footnote "r" is omitted from Table B.2-4B. Footnote "r" should be added to the table or the footnotes should be revised to eliminate this discrepancy.

Response: Agreed.
Action: Table B.2-4B has been modified.

Comment #: 59
Commenting Organization: U.S. EPA Commentor: Saric
Section #: B.2.4.2 Page #: B-2-154 Line #: NA Code:
New Specific Comment #: 11
Comment: Several of the parameters presented in Table B.2-6A either could not be identified in the cited reference or conflicted with values presented in the cited reference. For example, the parameters presented in Table B.2-6A for 1,1,2-trichlorotrifluoroethane could not be found in the cited reference. Also the t* and B values for 1,4-dioxane in Table B.2-6A (6.04E-01 and 3.80E-01, respectively) do not agree with the values presented in Table 5-8 of the cited reference (7.2E-01 and 5.4E-05, respectively). The tables should be revised to eliminate these inconsistencies.

Response: A number of the constituents listed in Table B.2-6A were not in Table 5-8 of the Dermal Exposure Assessment document. The parameters for these constituents were calculated using equations provided in the Dermal Exposure Assessment document. Parameters for 1,4-Dioxane and Dieldrin were incorrect and should be corrected.
Action: Table B.2-6A has been corrected. An assessment of the changes to the parameters for 1,4-Dioxane and Dieldrin indicates that the changes will not significantly affect the calculated dermal intakes for these parameters.

Comment #: 60
Commenting Organization: U.S. EPA Commentor: Saric
Section #: B.3.1.3.1 Page #: B-3-9 Line #: 6 Code:
New Specific Comment #: 12
Comment: The word "soil" has apparently been omitted from the beginning of this line. The line should be revised to begin with the word "soil."

Response: Agreed.
Action: The text has been corrected.

Comment #: 61
Commenting Organization: U.S. EPA Commentor: Saric
Section #: B.3.2.3.1 Page #: B-3-39 Line #: 31 Code:
New Specific Comment #: 13
Comment: This line states that the risk to the trespassing youth from dermal contact with benzo(a)pyrene is 1.2E-06. However, this risk is presented as 1.5E-06 in Table B.3.2-4. The text or the table should be revised to eliminate this discrepancy.

Response: Agreed.
Action: The value in the text is incorrect and will be changed.

Comment #: 62
Commenting Organization: U.S. EPA Commentor: Saric
Section #: B.3.2.4.3 Page #: B-3-134 Line #: NA Code:
New Specific Comment #: 14
Comment: This section discusses risks to the central tendency (CT) on-property resident farmer and cites several specific COCs. However, the text fails to cite Ra-226 and Th-232, which are shown in Table B.3.2-34 to present carcinogenic risks of 6.5E-04 and 1.2E-04, respectively, via the soil exposure pathway. Ra-226 and Th-232, which contribute 31.68 and 5.84 percent of the receptor risk, respectively, should be added to the discussion.

Response: Agreed.
Action: Text will be added to discuss Ra-226 and Th-232 impacts.

Comment #: 63
Commenting Organization: U.S. EPA Commentor: Saric
Section #: B.3.2.4.4 Page #: B-3-47 Line #: 26 Code:
New Specific Comment #: 15
Comment: This section presents the major contributors to risk to the homebuilder. However, arsenic, which is presented with a risk of 1.1E-06 in Table B.3.2-34, is not mentioned. The risk from arsenic should be added to the discussion.

Response: Agreed.
Action: Text will be added to discuss Arsenic impacts.

Comment #: 64
Commenting Organization: U.S. EPA Commentor: Saric
Section #: B.3.2.6 Page #: B-3-51 Line #: NA Code:
New Specific Comment #: 16
Comment: This section discusses the risk to on-property receptors and cites the primary contributors to risk to this receptor. Table B.3.2-34 shows that Ra-226 contributes 23.18 percent of the total receptor risk. However, Ra-226 is not included in the discussion. The text should be revised to include a discussion of Ra-226.

Response: Agreed.
Action: Text will be added to discuss Ra-226 impacts.

Comment #: 65
Commenting Organization: U.S. EPA Commentor: Saric
Section #: B.3.5.3.1 Page #: B-3-165 Line #: NA Code:
New Specific Comment #: 17
Comment: Table B.3.5-3 lists the CPCs for the lime sludge ponds. The CPCs in the table match those presented in Table 3.5-2(a), but not those in Tables B.3.5-25 through B.3.5-28. For example, lead; thorium-total; benzo(g,h,i)perylene; and phenanthrene are listed in Table B.3.5-3 as CPCs, but are not included in Tables B.3.5-25 through B.3.5-28. These tables should be reviewed and revised to eliminate any inconsistencies among them.

Response: Concentrations and intake values for these parameters are presented in Table B.3.5-4 through B.3.5-22. However, risks for these parameters are not calculated because reference doses and slope factors are not available. Therefore, risk values for these parameters are not listed in Tables B.3.5-25 through B.3.5-28.
Action: No action.

Comment #: 66
Commenting Organization: U.S. EPA Commentor: Saric
Section #: B.3.5.3.1 Page #: B-3-166 Line #: 4 to 5 Code:
New Specific Comment #: 18
Comment: This line presents the carcinogenic risk from thorium-232 as 2.5E-06. However, Table B.3.5-25 presents this risk as 2.4E-06. The text or the table should be revised to eliminate this inconsistency.

Response: Agreed.
Action: The text will be corrected to read 2.4E-06.

Comment #: 67
Commenting Organization: U.S. EPA Commentor: Saric
Section #: B.4.0 Page #: B-4-1 Line #: 4 Code:
New Specific Comment #: 19
Comment: This line states that CPCs are considered COCs if they present a noncarcinogenic risk greater than 0.2. However, at other points in the document, COCs are defined as CPCs with an HI greater than 1.0. The text should be revised to eliminate this inconsistency.

Response: Comment acknowledged. For the purposes of this risk assessment, we have defined a COC as a constituent causing a lifetime cancer risk greater than 10^{-6} or a HI of 0.2 or greater. The discussion of the results for total hazard to individual receptors compares to the level considered hazardous (HI greater than 1.0), not to the COC selection (HI of 0.2).
Action: The RI Report has been reviewed and the use of HI matches the definition identified in the response.

results from the equation were multiplied by 100 to obtain the percentage value (Table 3-3a). The percentage value was plotted against the depth using a scatter plot (Figure 3-32a).

Soils are considered saturated when they reach 100 percent or greater saturation, and are considered partially saturated below this value. As indicated by Figure 3-32a the level of saturation is independent from the depth. However, the till has an apparent tendency to be partially saturated at depths less than 10 feet, and a greater tendency for saturation at depths greater than 10 feet.

Gray soils, which are considered to be unoxidized, are found at depths from 12 to approximately 23 feet, and their saturation levels varied independently from depth (Figure 3-32b), but there were more samples saturated than partially saturated. The yellow/brown soils, the oxidized soils, were found at depths ranging from approximately 3 feet to approximately 25 feet, and with a tendency to be
No. 2 partially saturated at shallower depths (Figure 3-32c). ***Operable Unit 2 agrees to the precept that there is a degree of saturation throughout the till (from partial to total saturation); however, it must be kept in mind that wells have been installed in the till and screened at particular intervals and these wells have water levels. These water levels indicate a water table, which is "the upper surface of a zone of saturation" above which exists the vadose zone.*** As a whole, 39 percent of the samples were saturated and 51 percent partially saturated.

Groundwater elevation data from 2000-series monitoring wells completed within the upper Great
NO. 3-14 Miami Aquifer indicate that the regional aquifer is essentially flat beneath the Solid Waste Landfill, displaying an southeasterly potential flow direction with a gradient of 0.001 on June 21, 1993 (Figure 3-33). Groundwater elevations for monitoring wells screened within the aquifer are approximately 520 to 525 feet above MSL as shown on the hydrograph in Figure 3-34, which is about 60 feet below ground surface. The wells were screened in the saturated sands of the Upper Great Miami Aquifer (see Boring Log 3037, Appendix C-22; and well installation diagram for 2037, Appendix C-23). Groundwater elevation hydrographs from the Great Miami Aquifer in Well No. 2037 (Figure 3-34) above and Well No. 3037 at the blue clay aquitard are approximately the same (locations are shown on Figure 2-2). This suggests that there is very little vertical gradient in this area, a condition that does not favor deep recharge to the Great Miami Aquifer.

3.3 LIME SLUDGE PONDS CHARACTERISTICS

The Lime Sludge Ponds are located immediately west of the former Production Area. A north-south railway is located along the western boundary of this waste area (Figure 3-35). Access roads lie to the north and east of the waste area. A portion of the K-65 Slurry pipeline (part of Operable Unit 3) lies in a covered, concrete trench and forms the southern boundary.

~~July 1991 to March 1992 differed by 0.01 feet, while from March 1992 to August 1993, the elevation increased 2.5 feet (Figure 3-45). Examination of the boring log (Appendix E) indicates that Well 1711 is completed at the interface between the flyash and a sand gravel zone within the till. The elevation data suggest that groundwater flow may be in the sand/gravel until intense precipitative conditions (like those encountered during early 1993) occur to raise the perched water table into the flyash.~~ Data collected from Hydropunch™ and soil borings are summarized in Table 3-4. Groundwater was detected in sand and silt lenses within the glacial till overburden underlying the east edge of the flyash pile. The flyash was reported to directly overlie the Great Miami Aquifer at the southern tip of the Inactive Flyash Pile, and there was no perched groundwater system encountered. Groundwater conditions in the flyash/till are monitored by Well 1711, which was completed at the north end of the Inactive Flyash Pile in May 1991. Eight groundwater elevation measurements in Well 1711 from July 1991 to March 1994 differed by 0.01 feet, while from March 1992 to August 1993, the elevation increased 2.5 feet (Figure 3-45). Examination of the boring log (Appendix E) indicated that Well 1711 is completed at the interface between the flyash and a sand and gravel zone within the till. The elevation data suggest that groundwater flow may be in the sand/gravel zone until increased precipitation (as encountered during early 1993) raises the perched water table into the flyash.

Saturated groundwater conditions in the South Field were encountered in the glacial overburden within sand and silt lenses. One sand/silt lens was correlated across the site at approximately 8 to 12 feet below ground surface. The extent of groundwater appears to be directly related to the geometry and existence of this sand layer. Slug tests (Table 3-2) were conducted in several 1000-series wells in
No. 27 the South Field and indicate an average hydraulic conductivity for the ***sands in the*** glacial overburden of 3.8 x 10^{-4} cm/s (falling head tests) to 3.41 x 10^{-4} cm/s (rising head test). The elevation of perched groundwater was contoured and is shown on Figure 3-46. Data indicate that flow in the perched system follow topography and is toward the southwest in the South Field area. The gradient was 0.021 on August 16, 1993. Flow direction east of the Solid Waste Landfill is to the east/southeast and parallels the local topographic trend. The potentiometric surface indicates a groundwater divide in the perched water, extending north/northwest from the northeast corner of the South Field. This divide is reflective of the local topography of the area.

Groundwater elevations from January 1988 to November 1992 in two perched zone monitor wells are plotted as hydrographs in Figures 3-47 and 3-48. Groundwater elevations within the glacial

3-25 Groundwater elevations in the perched groundwater aquifer were presented in Figure 3-46. Groundwater flows toward the southwest and southeast due to an apparent groundwater divide that exists north of the flyash pile (see Section 3.4.2 for detailed discussion). The calculated gradient, NO 3-26 0.019, was based on inferred equipotentials on August 16, 1993, in till underlying the pile that does not contain sand layers.

Saturated groundwater conditions were detected within sand and silt in Well 1048 and within a sandy clay unit in Well 1045. Water levels in these wells fluctuated 7.7 feet in Well 1048 (upgradient) and 4.8 feet in Well ~~1048~~ 1045 (downgradient) from January 1988 to March 1992. The groundwater levels in Well 1045 typically rose to within two feet of the surface during the January to March wet period, suggesting that the upgradient well at the north edge of the Active Flyash Pile is monitoring a potential recharge zone. ~~In contrast, no saturated groundwater conditions were detected~~ No

No. 4 groundwater was encountered at the east edge of the Active Flyash Pile*; however, the boreholes in the area were not left open long enough to observe groundwater recovery*.

000039

4.0 NATURE AND EXTENT OF CONTAMINATION

No. 4-7, 11 Section 4.0 provides a detailed discussion of nature and extent of constituents that were determined to be contaminants of concern (COCs), which are defined in Section 6.0 of this RI report and summarized on Table 4-0. ***Based on the 1991 Amended Consent Agreement, the definition of Operable Unit 2 is waste materials, berms, and soils within the operable unit boundary. All other media (e.g., surface water, groundwater) is defined under another operable unit. Accordingly, the COCs in Operable Unit 2 RI/FS documents have been categorized as surface soil for the direct exposure to contaminated material/surface soil and cross-media for other media that would be impacted by contaminated material/soil in Operable Unit 2.*** This section also addresses radionuclides detected above background in ground water, surface water, sediment, and soils in Operable Unit 2. This allows for a more focused approach for discussing the nature and extent of constituents that comprise the greatest risk to human health. The summary tables in Section 4.0 (i.e., Table 4-3) list all of the constituents analyzed, summarize the number of occurrences where constituents were detected above background, and provide the ranges of concentrations for each No. 4-3 constituent. For comparison purposes in Section 4.0, both filtered and nonfiltered Operable Unit 2 metal samples were compared to filtered background metal samples. This was considered to be a conservative assumption (more hits above background). All other Operable Unit 2 samples shown in Section 4.0 (radionuclides, organics, and general chemistry) were compared to like (unfiltered) background samples. Detailed tables used to formulate the Section 4.0 summary tables and tables listing all sampling results are provided in the appendices C through G. The discussion of nature and extent in this section concentrates on areas within the battery limits of the Operable Unit 2 subunits. Also included are data used to define background concentrations for comparison purposes.

No. 4-80 The figures in this section provide a summary of the COCs detected above background and radionuclides detected above background (note: When the figure titles state "of concern" the title is referring to COCs; i.e., Metals of Concern are metals that are COCs).

The nature and extent of radiological and chemical constituents within Operable Unit 2 are based upon data collected during the Phase I and II field investigations and, to a limited extent, on field investigations conducted prior to Phase I (e.g., CIS and ES).

The range of chemical and radionuclide constituents that are present in Operable Unit 2 reflect the various uranium production and thorium operations conducted in the past at the FEMP. The

1-3 radiological constituents include uranium and thorium isotopes and their progenies. It should be noted that plutonium-239/240 and plutonium-238 had lower detection limits for Phase II (from 0.6 to 0.02 pCi/g), consequently, the frequency of detection increased for Phase II. Because the FEMP also processed recycled uranium from the Hanford facility during the 1970s, Operable Unit 2 could also be contaminated with uranium fission products. Other chemical constituents likely to be encountered

and magnesium fluoride) that were disposed on site in the Waste Pit Area (Operable Unit 1). Therefore, radionuclide contamination in Operable Unit 2 is apparently due to contamination resulting from past waste management practices.

The understanding of processes that generated the waste contained in Operable Unit 2 varies with each subunit. Operations that generated wastes contained in the Lime Sludge Ponds and the Active Flyash Pile are well known, whereas operations which contributed waste to the Solid Waste Landfill and the South Field are poorly documented.

The Lime Sludge Ponds received waste consisting of water treatment sludge, coal pile runoff, and boiler blowdown. The largest component, sludge, was generated by the addition of lime and aluminum sulfate to treat the site water supply for hardness. Elevated levels of certain inorganic
No. 22 constituents including aluminum, calcium, and magnesium would be expected. ~~, while organic and radionuclide contamination are not anticipated as a result of the processes that generated the lime sludge.~~

Ash from the coal-fired boiler plant was transported by truck and placed on the Inactive Flyash Pile from 1952 until the mid-1960s; after the mid-1960s, most flyash was sent to the Active Flyash Pile. Ash material placed at the Inactive Flyash Pile consists of bottom ash and flyash and includes ash collected from precipitators installed to control emissions from the boiler plant operation. Some unburned coal and rock are found in both piles, while soils and construction debris such as transite, reinforced concrete, and asphalt have also been disposed of at the Inactive Flyash Pile. To support evaluation of analytical results for the flyash pile samples, a literature search produced comparison data for normal constituents of ash. The findings are presented in Section 4.1.4.

No documentation of the types of wastes dumped at the Solid Waste Landfill has been discovered, although documents from the NLO engineering files indicate that the facility was intended as a sanitary landfill for nonburnable trash. A construction drawing, dated May 23, 1974, depicts five waste cells planned for the facility, but historical photographs and field investigations defined only one disposal cell and an evaporation pond. According to visual observation made during Phase I field investigation trenching at the landfill, the contents are mostly nonburnable. Trenching revealed that a variety of nonprocess solid wastes were placed in the landfill in addition to bagged trash, including bagged and loose asbestos materials, ceramic tiles, glass acid bottles, rubber hoses and tubing,

TABLE 4-1A
(Continued)

Analyte	Background Concentration[a]			
	Soils		Groundwater	
	Surface (0-6 inches)	Subsurface (36-42 and 48-54 inches combined)	Perched	Great Miami Aquifer
Metals (Continued)	(mg/kg)	(mg/kg)	(mg/L)	(mg/L)
Vanadium	30.37	37.80	0.020	0.025
Zinc	59.61	72.58	0.032	0.095
All Organic Compounds	0.0	0.0	0.0	0.0
General Water Chemistry			(mg/L)	(mg/L)
Ammonia	NA	NA	4.34	3.24
Chloride	NA	NA	46.10	120.0
Fluoride	NA	NA	1.298	0.929
Nitrate	NA	NA	0.462	10.0[h]
Total Phosphorus	NA	NA	0.206	0.679
Sulfate	NA	NA	138.192	352.992

[a]Source: DOE1993a (Soils), DOE1993d (Groundwater.) Value presented represents 95 percentile from site specific data except as noted. Metal background values for groundwater based on filtered samples; all other compounds are based on unfiltred samples.

[b]Value presented represents minimum detected value since 95th percentile UCL would be a nondetect.

[c]All values in the data set are nondetects; value assumed to be zero.

[d]This radionuclide is a fission product, and its presence in the environment ~~is~~ ***may be*** due ~~only~~ to atmospheric releases of radiation (e.g., weapons testing) ***and or reprocessing activities***. This radionuclide is not naturally occurring and is only expected to be present at or near detectable activities in the surface soil.

[e]Not analyzed; value assumed to be zero.

[f]NA = Not Applicable.

[g]Individual activity concentrations of the three isotopes for uranium and thorium were converted to mass concentrations. The three isotope mass concentrations were added to obtain the total thorium or uranium mass concentrations.

[h]Background value has been set to the MCL.

Comment No. 4-2, *24*

000043

5894

detected for Phase I, except for Octochlorodibenzo-p-dioxin, which was detected in eighteen samples at concentrations ranging form 0.05 to 13.7 ug/kg, the remaining ~~four~~ five dioxins/furans were detected once or twice at trace concentrations. Arochlor-1254 and

No. 4-65 Arochlor-1260 were detected above background in five samples ~~; however, due to the large number of dioxin detections, these Arochlor detections may be attributed to trace contamination from other organic chemicals.~~ Other radionuclides and organic compounds detected in the subsurface soils lead to the assumption that waste materials are a mixture of wastes from production, metallurgy, medical laboratory, construction, and maintenance activities. Comparison of the detected organic compounds for Phase I and Phase II shows that there were a variety of compounds detected in each sampling

No. 4-124 event. The surface soil COCs detected above background in the subsurface samples include antimony, arsenic, beryllium, neptunium-237, plutonium-238, radium-226, radium-228, technetium-99, thorium-228, thorium-230, thorium-232, uranium-234, uranium-235/236, uranium-238, benzo(a)anthracene, benzo(a)pyrene, benzo(b)fluoranthene, dibenzo(a,h)anthracene, and indeno(1,2,3-cd)pyrene. For both the surface soil and subsurface soil in the Solid Waste Landfill the concentrations for the constituents detected were variable and distributed throughout the subunit. The highest concentration for the surface soil radionuclides is 143 ug/g for uranium-total at location SWL-SS-05, and the highest concentration for an organic constituent is 2100 ug/kg for Pyrene at location SWL-SS-01 (Figure 4-2). The highest concentration for the subsurface soil radionuclides is 1770 ug/g for uranium-total at location 11036 (Figure 4-3, south-central portion), and the highest concentration for an organic constituent is 900000 ug/kg for Phenanthrene at location 11039 (Figure 4-4, east-central portion). A review illustrates that concentrations for these same constituents, or even other constituents, are within the same order of magnitude, or one order of magnitude lower, and are distributed throughout the Solid Waste Landfill south of the north drainage

No. 26 ditch. Therefore, as previously stated, there ~~are~~ ***is*** not ***just a*** single hot spot source area~~s~~ ~~for the surface soil or subsurface soil within the landfill~~ ***but several contributing to the whole***.

Radionuclides and organic compounds have been detected to an approximate depth of 2 to 4 feet (approximately 566 to 568 feet above the MSL) into the glacial overburden. The approximate extent of impact is 21 to 23 feet above the Great Miami Aquifer (551 to 553 feet above the MSL) and approximately 44 to 46 feet above the average ground water elevation (522 feet above the MSL) under the Solid Waste Landfill. A review of surface soil concentrations and subsurface soil concentrations indicates that analyte concentration are variable throughout the fill material. Concentrations in the borings decrease rapidly with depth, particularly in the glacial overburden

Upgradient 2000-series wells (Well 2949 and Well 2951), shown in Figure 4-6, did not detect total uranium above background. Downgradient 2000-series wells (Well 2947 and Well 2953) did not

No. detect concentrations of total uranium above background (Figure 3-33 shows groundwater flow

4-70 direction). ~~These data indicate that uranium from the subunit has not impacted the regional aquifer~~

4-129 ~~outside the battery limits.~~ This indicates that total uranium did not impact the regional aquifer outside the battery limits. Uranium-235/236 was detected at a concentration of 0.05 pCi/L in downgradient Well 2947 and at a maximum concentration of 0.277 pCi/L in Well 2037, which is within the boundaries of the landfill. This may indicate a minimal impact on the regional aquifer from the landfill outside the battery limits. Radium was detected in downgradient Wells 2947 and 2953

No. (Figure 4-6), and upgradient Well 2027 ~~2-27~~ (see Figure 3-33 for flow direction). Radium was not

4-73 detected in Well 2037, which is in the landfill boundaries and upgradient from Well 2947 and 2953. This suggests that radium from the landfill did not impact the groundwater, and the source for the radium is from outside the landfill. A groundwater sample collected from Well 2037, located inside the limits of the Solid Waste Landfill detected elevated uranium isotopes, strontium-90, and carbon disulfide. These constituents were detected in samples collected from Well 1037, located adjacent to Well 2037. Construction information indicates that Well 1037 was completed to within three feet of the top of the regional aquifer. A water level hydrograph prepared for Well 1037 showed that water levels vary from 549.76 to 555.8 feet above MSL approximately 20-25 feet below the perched water in the landfill. These data may indicate that leakage from Well 1037 ~~is~~ ***may be*** influencing water quality in Well 2037 ~~and that concentrations of constituents detected above background are not a result of leakage through the matrix of the glacial till under the landfill; rather, they are a local effect~~

No. ~~of poor well construction.~~ ***The downgradient wells didn't exhibit this contamination. This would***

4-76, ***indicate a localized impact on the upper GMA from the landfill due to poor well construction.***

26 ~~Therefore,~~ Well 1037 has been plugged and abandoned.

000045

A comparison of selected data from paired wells is shown in the following table:

No. 4-69

Regional Aquifer	2000-Series Well / 1000-Series Well	Strontium-90	Total Uranium	Total Thorium
Upgradient Well	2949	0.754 µg/L	0.378 pCi/L	<2 pCi/L
	1035	ND*	2.55 pCi/L	<3 pCi/L
	2951	1.740 µg/L	0.781 pCi/L	<2 pCi/L
Upgradient Well	1950	ND	7.67 pCi/L	5.96 pCi/L
Downgradient Well	2953	1.010 µg/L	1.23 pCi/L	<2 pCi/L
	1952	ND	55.8 pCi/L	104 pCi/L

*ND = Not detected

The data indicate that strontium-90, total uranium, and total thorium, which are detected in elevated concentrations in the perched zone, are detected below background concentrations in regional aquifer wells upgradient and downgradient of the Solid Waste Landfill. A comparison of nested wells, for example, Wells Nos. 1952 and 2953 data indicates that vertical leakage from the perched zone to the regional aquifer is not evident.

4.2.5 Biota

No. 4-10 ~~Ecological impacts from the Solid Waste Landfill are not addressed in the Operable Unit 2 RI because a Site-wide Ecological Risk Assessment will be prepared as part of the Operable Unit 5 RI/FS.~~ The ecological impacts from material left after remediation will be addressed in the Site-Wide Ecological Risk Assessment that will be prepared as part of the Operable Unit 5 RI/FS.

4.2.6 Summary

The following conclusions concerning the Solid Waste Landfill are made:

No. 4-4, 4-33, 4-90

- ~~The constituents and their concentrations for the surface soils are found in varying degrees throughout the Solid Waste Landfill suggesting that there are no defined surface hot spots.~~

- The surface soil COCs ~~that were~~ detected above background in ~~the~~ ***sub***surface ~~soils were~~ ***samples include*** antimony, arsenic, beryllium, ~~neptunium, radium, thorium, uranium, plutonium, technetium,~~ ***neptunium-237, plutonium-238, radium-226, radium-228, thorium-228, thorium-232, uranium-234, uranium-235/236, uranium-238,*** benzo(a)anthracene, benzo(a)pyrene, benzo(b)fluoranthene, dibenzo(a,h)anthracene, and indeno(1,2,3-cd)pyrene. An additional radionuclide, strontium-90, was also detected above background. These constituents were found in varying concentrations throughout the surface soils for the Solid Waste Landfill.

No. 4-4 *No. 27*

- The concentrations for subsurface soils constituents are found in varying degrees throughout the landfill. The surface soil COCs detected above background in the subsurface samples include antimony, arsenic, beryllium, neptunium-*237*, plutonium-*238, plutonium-239/240*, radium-*224, radium-226, radium-228*, technetium, thorium-*228, thorium-230, thorium-232*, uranium-*234, uranium-235/236, uranium-238*, benzo(a)anthracene, benzo(a)pyrene, benzo(b)fluoranthene, dibenzo(a,h)anthracene, and indeno(1,2,3-cd)pyrene. Other radionuclides detected above background were lead-210 and strontium-90. The greatest concentrations for the radionuclides are detected in the vicinity of location 11036 (south-central portion). The highest concentrations for the organic constituents are in the vicinity of locations 11039 (east-central) and 1719 (central).

No. 4-4, 4-11

- ~~Sediment and surface water samples downstream of the landfill had the surface soil COCs beryllium, neptunium, plutonium, uranium, benzo(a)pyrene, benzo(b)fluoranthene, carbazole, and indeno(1,2,3-cd)pyrene detected, which would indicate a possible impact from the landfill. An additional radionuclide, strontium-90, was also detected above~~

No. 8

~~background in Phase II sediment samples.~~ *A comparison of upstream and downstream surface water samples from the Solid Waste Landfill drainage ditch indicated total uranium concentrations of approximate equal value. A standing surface water sample from well 1947, which is east and upstream of the landfill, had total uranium results within the same order of magnitude as the surface water samples collected from the drainage. This indicates that the Solid Waste Landfill may not be the only source for the uranium detected in the drainage ditch.*

No. 27

Sediment samples were collected downstream of the Solid Waste Landfill and were compared to the Solid Waste Landfill surface soil samples. The surface soil COCs beryllium, neptunium-237, plutonium-238, strontium-90, uranium-234, uranium-235/236, uranium-238, benzo(a)pyrene, benzo(b)fluoranthene, carbazole, and indeno(1,2,3-cd)pyrene were also detected in the downstream sediment sample. This would indicate that the migration of contaminants from the Solid Waste Landfill to the drainage ditch north of the landfill may have occurred.

No. 4-4
No. 27

- The surface soil COCs, arsenic, beryllium, neptunium-237, radium-226, thorium-228, thorium-230, thorium-232, plutonium-238, uranium-234, uranium-235/236, and uranium-238 (also a cross-media groundwater COC), were detected above background in the perched groundwater. An additional radionuclide, strontium-90, was also detected above

No. 27 background in two Phase II samples. Radium-*226*, thorium-*228, thorium-230, thorium-232, uranium-234, uranium-235/236*, and uranium-*238* were detected above background downgradient of the landfill indicating an impact on the perched groundwater. Surface soil COC, uranium-235/236, was detected directly downgradient of the landfill in the regional aquifer. However, the concentration was 0.05 pCi/L which would indicate a minimal impact, if any, on the regional aquifer from the landfill.

No. 4-4, 4-14, 27, 28

- A sample of perched groundwater downgradient from the waste unit detected elevated concentrations of uranium-*234, uranium-235/236, uranium-238*, ~~and~~ thorium-*232*, and strontium-90, which indicates an impact from the landfill. ~~Samples from downgradient regional Great Miami Aquifer wells did not detect any concentrations of uranium, or thorium, or strontium-90 above background.~~ ***Downgradient wells in the regional aquifer had concentrations of radium-226, plutonium-238, strontium-90, and uranium-235/236 above background.*** A comparison of ~~concentration~~ data from paired wells indicates that vertical constituent migration from the perched aquifer into the regional aquifer is not evident (see Figures 3-31 and 3-33 for flow directions).

- Waste material analyzed in investigation trenches and borings appears to be of relatively low-level radioactivity, and may have originated in nonprocess areas of the operating plant (i.e., laboratory and manufacturing areas).

No. 4-4, 4-12

- One waste disposal cell (Cell 1) was identified in photographs and in trench and boring samples. Elsewhere, waste material was found mixed with soil at depths from the surface to about 10 feet deep, which is approximately the depth of the fill/till interface. ~~The average uranium depth of waste burial appears to be the original till surface or about 10 feet deep; however, deeper pits may have been used for disposal at the southeast corner of the landfill.~~ Aerial photos also indicate that there may have been some randomly placed pits, which may have been deeper than ten feet to accommodate waste disposal.

No. 4-4, 4-13

- Concentrations of radionuclides and organic compounds were detected above background levels in surface soil and subsurface soil~~, and in leachate from two test trenches~~. Leachate samples from all trenches contained detectable levels of radionuclides and leachate from Trench 2 contained detectable levels of organics.

No. 4-4

- ~~A comparison of Phase I and Phase II data with the CIS and ES data didn't produce any unexpected anomalies. This comparison confirmed, as a whole, the validity of the Phase I and Phase II sampling program.~~

No. 4-15 The surface soil COCs arsenic, beryllium, neptunium, radium, thorium, plutonium, and uranium (also a cross-media groundwater COC) were detected above background in the perched groundwater. An additional radionuclides, strontium-90, was also detected above background in two Phase II samples. Radium, thorium, and uranium were detected above background downgradient of the landfill indicating an impact on the perched groundwater. Surface soil COC, uranium-235/236, was detected directly downgradient of the landfill in the regional aquifer. However, the concentration was 0.05 pCi/L which would indicate a minimal impact, if any, on the regional aquifer from the landfill.

No. 29 from spillage on the haul roads in the former Production Area. ***There has been verbal confirmation of the type of maintenance activities occurring for th K-65 slurry trench; i.e., the removal of damaged pipe from the trench and the placement of this pipe on the surface adjacent to the trench with possible subsequent leakage of residual contaminated material onto the surface.*** As the K-65 slurry line trench is part of Operable Unit 3, it will be fully characterized during the Operable Unit 3 RI.

Organic analytical data is shown on Figure 4-8A. Maximum concentrations for organic compounds detected in surface samples of the sludge included bis(2-ethy(hexyl)phthalate (390 μg/kg) and di-n-butyl phthalate (120 μg/kg). Maximum concentrations for the following compounds were detected in samples from the road along the north boundary: chrysene (1100 μg/kg), and benzo(a)pyrene (1100 μg/kg), aroclor 1254 (590 μg/kg), benzo(k)fluoranthene (800 μg/kg). A comparison of the number of organic compounds detected in surface samples and their location suggests that the haul road north of the Lime Sludge Ponds has contributed to the organic compounds detected in surface soil samples from the unit. Aroclor-1254 is an indicator that the source for organic compounds in LSP-SS-12 (north pond berm) is the same as for LSP-SS-13 and LSP-SS-14 (the haul road). Concentrations of PCBs were higher in samples collected from the road (590 μg/kg and 90 μg/kg, aroclor-1254) when compared to pond surface samples (one detection of 43 μg/kg Arochlor-1254 at LSP-SS-12).

No. 4-131

A comparison of Phase I and Phase II surface soil samples with the CIS data (Appendix D-16A) indicates that the parameters detected in the CIS were detected in Phase I and Phase II and within the same order of magnitude.

Concentrations of constituents detected above background in subsurface samples collected from the Lime Sludge Ponds are presented in Appendix D in Table D-2B and Table D-2C. A summary of the analytes for Phase I and II is provided in Table 4-17 and Table 4-18. Twelve metals, isotopes of three elements, and one ~~no~~ organic compounds ~~for~~ (2-hexanone) were detected above background for Phase I from two sample locations. From thirty sample locations during Phase II there were twenty four metals (Aluminum, Arsenic, Barium, ~~Cadmium~~, Cobalt, Iron, Lead, Manganese, Mercury, Nickel, Potassium, Selenium, and Vanadium were detected above background for Phase II but not for Phase I; and Thallium was detected above background for Phase I but not Phase II), isotopes of eight elements (cesium-137, neptunium-237, plutonium-238, plutonium-239/240, radium-226, radium-228,

No. 4-17

No. 4-132

No 4-132 technetium-99, thorium-total, ~~uranium-238~~, and uranium-235/236 were detected above background for Phase II but not Phase I), and thirteen organic compounds were detected above background for Phase II.

contaminated prior to and after the excavation of the lime sludge ponds and then the lime sludge was
No. 30 disposed of on top of the contaminated soil. ***However, contamination or additional contamination to the soil below the lime sludge may have occurred from the leaching of the lime sludge.***

A comparison of the Phase I and Phase II subsurface soil results with the CIS profile sample results (Appendix D-16B) indicates the radionuclide parameters detected during the CIS were also detected in Phase I and Phase II and were within the same order of magnitude.

Two volatile organic compounds, acetone and toluene, were detected in surface and subsurface soil samples. These are believed to be laboratory induced contaminants since they are detected at random depths and locations. Trace levels of 2-butanone were detected in two borings. This volatile is a common lab contaminant and also believed to be a lab contaminant in this case since it was detected in soil underlying the pond in Boring No. 1963 but not in overlying material. Trace concentrations of 1,1-dichloroethane (5 μg/kg) and methylene chloride (31 μg/kg) were detected in Boring Nos. 1959 and 1958, respectively.

Eight semivolatile organics were detected in subsurface samples. All were detected two times or less except for di-n-butyl phthalate and bis(2-Ethylhexyl)phthalate. Detected concentrations of these compounds are summarized in Table 4-20. Concentrations and sample depth do not appear to be correlated and this indicates that the compound is integrated into the sludge, underlying soil, and berm materials. In contrast to the 18 organic compounds detected in surface samples, eight compounds were detected in subsurface samples. Five compounds (anthracene, phenanthrene, fluoranthene, pyrene, and n-nitrosodimetlylamine) were detected once in samples from the north edge of the north pond, the west berm, and the exploratory trench dug parallel to the K-65 trench. This indicates that these areas are a possible source for the organic compounds detected in sludge samples.
No. 31 ***Contamination increased with depth in locations 1947, 1961, 1962, and 1963. The berms were constructed prior to lime sludge disposal. If the berms were constructed of contaminated material, then it is likely that surface water ran off into the ponds from the contaminated berms, causing contamination at depth due to leaching. Also, as time went on, the levels of berm surface contamination decreased due to this run-off.***

An investigation trench approximately 275 feet long was excavated parallel to and south of the concrete K-65 slurry line (Figure 4-9) in an effort to locate areas of possible leakage from the slurry

o. line. This trench will be fully characterized by Operable Unit 3 during their RI. Field soil
4-20 radioactivity measurements ranged from 90 cpm to 460 cpm, which were above the background measured each day (60 to 80 cpm). Field measurements did not define soil containing elevated radioactivity where historical leakage from the slurry line containment had occurred. Soil samplesfrom the trench were collected from two locations: one location was selected adjacent to Well 1042 and one location was selected adjacent to Well 1934. Data from these samples are provided in

samples is provided on Table 4-21. A comparison between the data from samples collected within the Appendix D in Table D-2C. A summary of selected laboratory analytical results for these soil concrete K-65 slurry line and data from soil outside the slurry line indicates the following:

- Comparison of chromium, nickel, vanadium, and zinc concentrations indicates that these are elevated for slurry line samples. Elevated concentrations for the same metals were detected in soil samples collected adjacent to the slurry line in the investigation trench.

No. 4-132

- The highest concentration for total uranium (51.6 μg/g) detected in the concrete K-65 slurry line trench was similar to elevated concentrations in the soil outside of the trench (24.8 μg/g). The subsurface ~~background~~ soil background concentration for total uranium is ~~2.54~~ 3.4 μg/g.

No. 4-132

- The highest activity measured for radium-226 (3.48 pCi/g), thorium-230 (16.23 pCi/g), and uranium-238 (20.4 pCi/g) in samples from the concrete trench were similar to elevated concentrations in the soil outside of the trench. Samples of the soil detected elevated concentrations of radium-226 (5.93 pCi/g), thorium-230 (20.3 pCi/g), and uranium-238 (5.5 pCi/g). Subsurface soil ~~B~~background concentrations for the radioisotopes are ~~0.780~~ 1.47 pCi/g for radium-226, ~~1.239~~ 1.88 pCi/g for thorium-230, and ~~0.844~~ 1.12 pCi/g for uranium-238.

This comparison of sample data indicates that leakage from the trench may be a source of the elevated concentrations of these isotopes in the soil adjacent and south of to the trench.

Composite samples of the lime sludge were collected from eight borings, and TCLP tests were conducted. A summary of the analytical data is provided in Appendix D, Table D-12 and the results are summarized in Table 4-22. Eight samples were collected and tested to determine hazardous waste characteristics by the TCLP method. Five samples indicated the presence of barium and chromium in trace concentrations, but none of the detections exceeded the RCRA standard that defines hazardous waste. The Lime Sludge Ponds are currently classified as Solid Waste Management Units (SWMUs).

No. 32 Results from the TCLP analyses confirm that the materials are not characteristically hazardous. ~~In addition, no trichloroethane was detected in sludge samples, confirming that the wastewater exemption for use of small amounts of solvent on site was applicable.~~

4.3.3 Surface Water and Sediment

There are no perennial sources of running surface water within the battery limits of the Lime Sludge Ponds. A channelized drainage at the north edge of the battery limits is the only drainage identified in the subunit. Flow to this drainage originates from the road and enters a sewer at the northwest

Concentrations of selected analytes detected in samples from 1000-series wells are presented in Table 4-27. Radionuclides detected above background in 1000-series wells are plotted in Figure 4-10. A comparison of concentrations in upgradient Well 1039 and the downgradient wells indicated the following:

- Chloride and sulfate concentrations decrease in the downgradient direction from 360.23 mg/L and 123.4 mg/L (Well 1039) to 47.1 mg/L and 77.0 mg/L (Well 1934), respectively. The chloride and sulfate concentrations in the north pond surface water were 72 mg/L and 39.3 mg/L, respectively (Appendix D-9). The source of elevated chloride concentrations in the upgradient well may be due to the leaching of salt ~~walt~~ used in salting the road adjacent to the north boundary during the winter. This indicates that precipitative recharge occurs in this area.

No. 4-84

- Metals detected in elevated concentrations, both in the sludge and samples of groundwater beneath the ponds (Well 1041) and downgradient (Well 1934), include chromium, copper, beryllium, and vanadium. These data suggest that metals, have leached from the pond sludge and have impacted perched groundwater.

- Total uranium concentration is elevated in downgradient Well 1042 (30.4 μg/L) and Well 1934 (17.5 μg/L) relative to the upgradient Well 1039 (less than 1 μg/L). The increase may be due to impacts from the K-65 slurry line trench (discussed in Section ~~4.2.3~~ 4.3.2), which is in the flow path between the ponds and the wells.

No. 4-137

- Thorium-230 and radium-226 activities are higher in downgradient Well 1934 (6.67 and 1.40 pCi/L, respectively) relative to upgradient Well 1039 (0.251 and <0.183 pCi/L, respectively) and upgradient Well 1041 (1.37 pCi/L and 0.310 pCi/L, respectively). The increase may also be due to impacts from the K-65 slurry line trench. Also, neptunium-237, strontium-90, and technetium-99 were detected above background in the perched groundwater. ***One of the most notable detections was 17.4 total thorium in downgradient well 1937. This may indicate that the Lime Sludge Ponds impacted the perched groundwater.***

No. 4-138, *13*

Groundwater analytical data from the 2000-series wells were compared to background data from the regional aquifer and a summary of the analytes is provided in Tables 4-28~~A, 4-28B,~~ and 4-29. Phase I sampling on one 2000-series well detected ~~one~~ two metals, isotopes of thorium and uranium, and two organic compounds (acetone at 7 μg/L and phenol at 50 μg/L) that exceeded background concentrations. Phase II sampling of four wells detected three metals (Aluminum, Manganese, and Potassium; Aluminum and Potassium ~~which~~ were not detected during Phase I), isotopes of three elements (neptunium-237 and plutonium-238 were not detected for Phase I, thorium-~~238~~ 228 was detected during Phase I but not Phase II), and one organic compound (Butyl benzyl phthalate).

No. 4-139

Concentrations of selected radionuclides detected in samples collected from the 2000-series wells during Phase II are shown on Figure 4-11 and presented in Table 4-27. A comparison of concentrations in samples from upgradient and downgradient wells indicates the following:

- Chloride concentrations are similar in upgradient Well 2939 (26.86 mg/L) and downgradient Well 2935 (23 mg/L) and Well 2042 (18.82 mg/L). This indicates that no impacts are present from the Lime Sludge Ponds.

- Isotopes of neptunium and plutonium were detected above background (which was 0.00 pCi/L) in water samples from all of the wells. Isotopes of uranium were detected above background (2.71 μg/L) in all three downgradient wells (2042, 2935, and 2936). The background value for total uranium (2.92 μg/L) was exceeded slightly in Well 2042 (3.39 μg/L) and Well 2935 (2.86 μg/L). These data do not indicate an impact from the waste unit upon the regional groundwater.

4.3.5 Biota

No. 4-10 ~~Impacts of the Lime Sludge Ponds upon biota will be discussed in the Operable Unit 5 Remedial Investigation Report.~~ The ecological impacts from material left after remediation will be addressed in the Site-Wide Ecological Risk Assessment that will be prepared as part of the Operable Unit 5 RI/FS.

4.3.6 Summary

The following conclusions concerning the Lime Sludge Ponds are possible:

No. 27

- ***There are no perennial sources of running surface water within the battery limits of the Lime Sludge Ponds. Precipitation remains in the ponds since they are contained. the only source of surface water runoff is the steep outside berms of the south pond, and since the surface area of the berms is small and has a vegetative cover, the runoff is minimal and runs off in sheet flow.***

No. 4-4

- The surface soil COCs detected above surface soil background were cesium-137, radium-226, radium-228, thorium-228, thorium-230, thorium-232, total uranium, and arsenic.

No. 4-4, 4-22, 4-84

- ~~Sludge~~ Subsurface samples (including lime sludge and soil) contained trace amounts of organic compounds including six volatile ~~organic~~ and eight semivolatile organic compounds. With the exception of phenol in Phase I and bis(2-ethylhexyl)phthalate in Phase II (which are common laboratory contaminants), organic compounds ~~detected in soil~~ were not detected in samples of perched groundwater, indicating that organics have not leached from the sludge to the perched groundwater ~~these compounds are not leaching from the sludge~~.

No. 4-4, 27

- The surface soil COCs~~, arsenic, beryllium,~~ cesium-***137***, ~~neptunium,~~ radium-***226, radium-228***, thorium-***228, thorium-230, thorium-232, uranium-238*** , and ***total*** uranium were detected above background in the subsurface samples. Other radionuclides detected above background were plutonium, strontium, and technetium.

No. 4-4, 24

- Chemical and radiological samples indicate that the sludge, the roadway, and the berm materials have different ~~characteristics~~ constituents and concentrations and are ~~thus~~ considered distinct waste materials.

000057

No. 4-4, 4-24, 4-87

- Samples collected from sludge and underlying soil indicate that the underlying soil has higher ~~values~~ concentrations than the sludge for most constituents. ~~This means that future impacts of the sludge upon the soil are not likely.~~

No. 27

No. 4-4

- In perched groundwater, the surface soil COCs ~~neptunium,~~ radium-*226*, thorium-*228*, *thorium-230, thorium-232, uranium-238*, and uranium *total* were detected above background. An additional radionuclide, strontium-90, was also

detected above background.

No. 4-4, 4-21, 4-22, 4-88, No. 15

- Elevated concentrations of uranium and thorium were detected in downgradient perched groundwater wells~~, but samples collected from the K-65 slurry line trench contained elevated radioisotope activities, and this is believed to be the source of the contamination. Because the K-65 slurry line trench contained higher concentrations of these radionuclides than the Lime Sludge Ponds and the contaminants detected in the downgradient wells (see Figure 3-31) were of the same order of magnitude as for the trench, the trench is believed to be a possible source for the contamination.~~ ***This may be due to both the Lime Sludge Ponds and the K-65 slurry line trench impcting the perched groundwater.***

No. 4-4

- Concentrations of metals were elevated in sludge and in downgradient perched groundwater wells. This suggests that there has been a possible impact by metals leaching from the sludge into the perched groundwater.

No. 4-4

- Samples of regional aquifer groundwater detected ~~slightly elevated concentrations of~~ uranium above background concentrations in two of three downgradient wells. However, the concentrations are very close to background suggesting that the impact of radioisotopes from the Lime Sludge Ponds is minimal.

No. 4-4, 4-27

- Samples of regional aquifer groundwater detected six metals commonly associated with the soil matrix. ~~These constituents were detected in unfiltered water samples and are possibly a result of slight turbidity prior to acidification during sampling.~~

No. 27

- The surface soil COCs ~~neptunium,~~ thorium-***228, thorium-232, uranium-238***, and ***total*** uranium were detected above background in 2000-series wells in the regional aquifer. An additional radionuclide, plutonium, was also detected above background.

4.4 INACTIVE FLYASH PILE

Analytical results for samples collected from the Inactive Flyash Pile are presented in Appendix E. Sample analyses that detected analytes at concentrations above background (defined in Table 4-1A) will be discussed in this section. Analyte concentrations at or below background will be considered as expected for soil or flyash and will not be discussed further. Geology and hydrogeology of the Inactive Flyash Pile referred to in this section were discussed in more detail in Section 3.4.

4.4.1 Volume and Physical Characteristics of the Waste

No. 4-28

The volume of flyash and waste materials was estimated for the Inactive Flyash Pile ~~and South Field together. The volume for the combined subunits is 216,489 cubic yards~~ as 95,891 cubic yards, and the contours of waste thickness are shown on Figure 4-12.

Flyash was originally coal that was burned at the boiler plant and would be expected to contain elevated concentrations of metals and radionuclides when compared to background soil concentrations

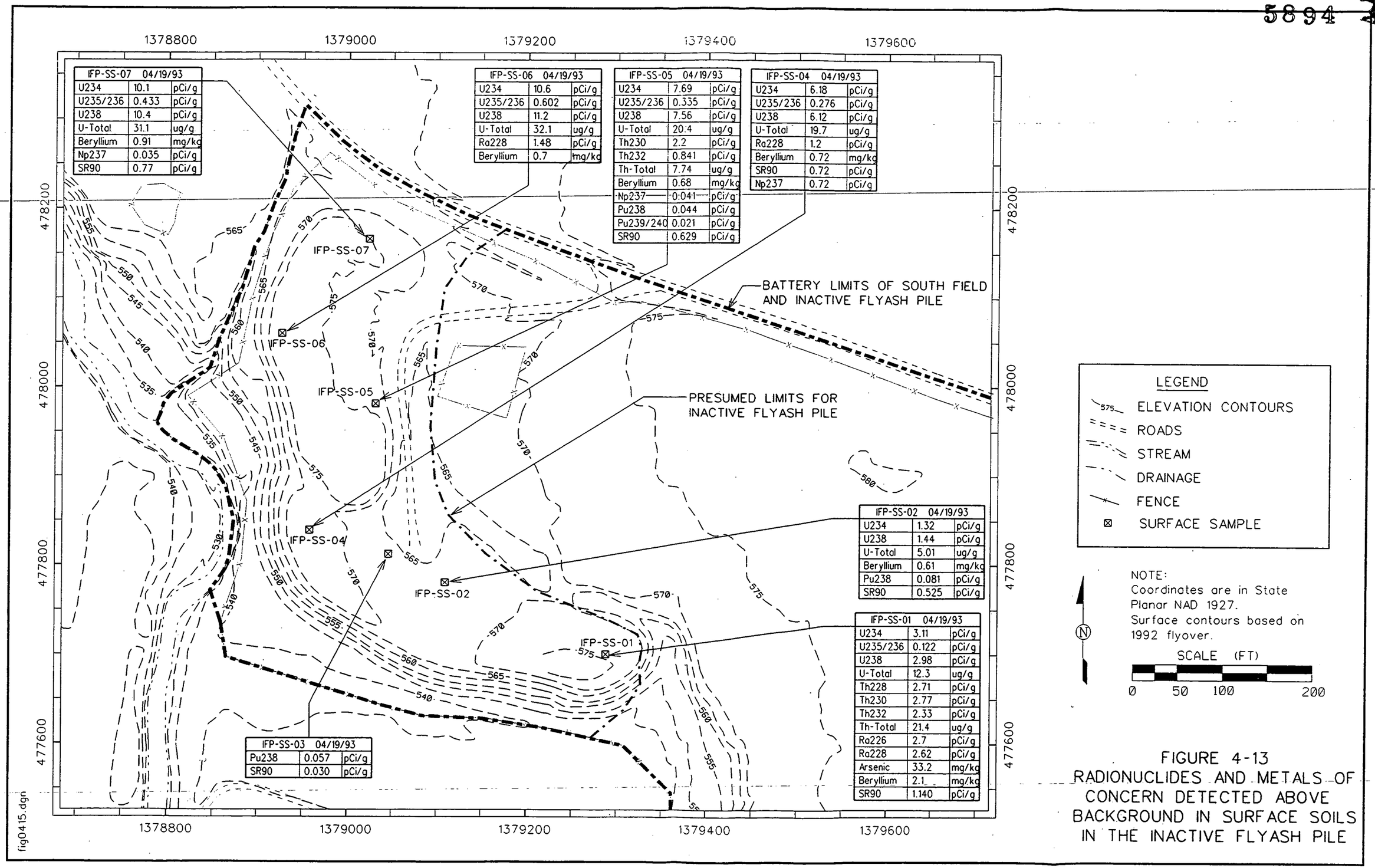

FIGURE 4-13
RADIONUCLIDES AND METALS OF CONCERN DETECTED ABOVE BACKGROUND IN SURFACE SOILS IN THE INACTIVE FLYASH PILE

Waste materials were identified from samples collected from four borings in the Inactive Flyash Pile. A summary of selected constituents detected above soil background is presented in Table 4-34 along with background concentrations for soil and flyash. The determination of flyash background concentrations was discussed in Section 4.1.4~~3~~. The concentration of metals appears elevated in
4-145 comparison to background soil concentrations. The elevated concentrations of these materials may be due to its association/contact with process material/waste.

Phase I and Phase II subsurface soil data were compared to CIS and ES data (Appendices E-7 and E-8). Analytes detected in these preliminary studies were also detected in Phase I and Phase II and within the same order of magnitude.

A comparison of metals, radionuclides, and organic compounds detected in surface and subsurface soil indicates the following:

No. 4-92
- Subsurface concentrations of antimony, cyanide, mercury, and silver ~~metals~~ are consistent with background flyash~~, except for samples collected of visible waste sludge material~~. Above background concentrations of copper, lead, and mercury were associated with sludge material, which indicates that the analytes, when above flyash background, may be waste derived.

No. 4-30
- Concentrations of organic compounds and radionuclides are significantly higher in subsurface samples. This indicates that ~~surface spillage and leaching is not responsible for observed concentrations, and that past disposal practices are~~ disposal of contaminated material occurred throughout the Inactive Flyash Pile over the time period the pile was active.

- There does not appear to be a single distribution pattern for analytes that defines a boundary of disposal activity on the surface or subsurface.

No. 8
- ~~When the determination could be made between samples collected in pure flyash and samples taken in fill, it was generally noticed that the flyash samples had lower constituent concentrations than the fill samples.~~

4.4.3 Surface Water and Sediment

There are no perennial sources of surface water within the battery limits of the Inactive Flyash Pile, so surface water was not present at several of the proposed drainage sampling locations. Surface water samples were collected on an "as-possible" basis after rainstorms. Drainage within a channel at

downstream of the drainage channel did not detect an impact on April 21, 1993 from the Inactive Flyash Pile.

4.4.4 Groundwater

Monitoring Well 1711 is the only monitoring well completed in the upper perched groundwater zone within the Inactive Flyash Pile. Other wells included in the dataset are completed in the perched zone at the edge of the Inactive Flyash Pile. This is because the perched zone is limited in horizontal extent to the north half of the Inactive Flyash Pile. Wells 1047 and 1711 were sampled during Phase I; however, there was insufficient water in Well 1711 for radionuclide analyses. Ten metals were detected above background in a sample from Well 1711 including cobalt, nickel, and thallium. These metals were also detected at elevated concentrations in flyash. There was insufficient water to collect a sample during Phase II field activities, so upgradient Well 1047 data are discussed below. Groundwater analytical data from Well 1047 was compared to background concentrations for perched water. The analytical data are provided in Appendix E, Table E-2G and Table E-2H. A summary of the number of detected analytes is 1000-series wells is provided in Table 4-40 and Table 4-41. Twelve metals and the isotopes of two elements and no organic compounds were detected in four samples collected during both Phase I and Phase II; no organic compounds were detected.

In order to characterize the perched groundwater system beneath the Inactive Flyash Pile, twelve groundwater samples were collected from 17 Hydropunch™ sample locations. On-site analyses were used to define the distribution of uranium in perched groundwater at the subunit. These data are presented in Table 4-42 and the locations are shown on Figure 4-23 (see Volume 2, Oversized Figures). Perched water was encountered beneath the north end of the Inactive Flyash Pile but not
No. 4-149 during attempted sampling in April to May 1993 at the south end of the Inactive Flyash Pile. ~~The extent of saturated conditions in the till were discussed in Section 3.0, and appeared to be limited to the subunit north of Hydropunch™ 11051.~~

A comparison of total uranium concentrations in soil and water samples collected during the Hydropunch™ activities is presented on Table 4-42 and indicates the following:

- Water samples collected from Hydropunch™ 1999, 11000, 11001, 11002, 11004, 11007, 11048 and 11050 had total uranium ranging from 9.5 μg/L to 6700 μg/L. These
No. 4-150 Hydropunch™ ~~locations were not associated with waste materials (that is, soil samples from~~

No. 34 ~~the saturated intervals were less than the detection limit of 11 mg/kg)~~ ***samples were collected from intervals where no waste material other than flyash or fill were identified.*** this suggests that the source for the water contamination was upgradient of the Hydropunch™ locations ***in the northern portion of the Inactive Flyash Pile.***

No. 4-15 • Water samples from Hydropunch™ 11003 and 11051 had total uranium in water of 720 μg/L and 74 μg/L, ~~while soil samples from the saturated intervals~~ had 378 mg/kg and 1010 mg/kg, respectively. These Hydropunch™ water samples are believed to be associated with waste materials in the perched zone.

Hydropunch™ data suggest that, in the northern portion of Inactive Flyash Pile, perched groundwater *No. 36* is flowing through waste materials ***in the Inactive Flyash Pile*** containing uranium upgradient from the Hydropunch™ locations. A comparison of the surface water uranium concentrations from the west drainage, downgradient from the identified seepage, and the perched water uranium concentrations indicates that the northern portion of the Inactive Flyash Pile may be the source for the uranium concentrations associated with the seepage.

No. 4-96 Four 2000-series wells were sampled during Phase I. ~~Well 1016 is mislabeled and is actually completed in the regional aquifer at the south edge of the Inactive Flyash Pile. The other wells are~~ Wells 21190 (1016), 2016, 2042, and 2402, which are located on the northeast and southern battery limits of the Inactive Flyash Pile. Aluminum, calcium, and chromium were detected above
4-152 background in Wells 21190(1016) and 2016. Uranium and two organic compounds were detected. The nested Wells 3016 and 4016 were also sampled and detected trace lead, manganese, and uranium.
No. The highest concentrations of total uranium in the 21190(1016)-2016-3016 well group in 1989 was 9
4-153 μg/g, 22 μg/g, and 7 μg/g, respectively. These data indicate a possible impact from the subunit upon groundwater. Well 2955 was installed in the Inactive Flyash Pile during Phase II. Analytical data from the 2000-series wells were compared to background data from the regional aquifer. Analytes detected above background are provided in Appendix E in Table E-2I while a summary of the
No. analytes is provided in Table 4-43 and Table 4-44. Phase II sampling detected aluminum and
4-154 manganese, isotopes of four elements (neptunium-237, plutonium-238, plutonium-259/240, thorium-232, and uranium-235/236 were not detected during Phase I), and three organic compounds (Carbon disulfide and Butyl benzyl phthalate were not detected for Phase I; bis(2-Ethylhexyl)phthalate was detected above back ground for Phase I but not Phase II) that exceeded background values in four samples.

Concentrations of selected analytes detected above background are presented in Table 4-45. A comparison of the concentration of total uranium in upgradient Well 2402 (5.62 μg/L) and downgradient Well 2945 (2070 μg/L) or downgradient Well 2954 (1167 μg/L) indicates that there has been a release of uranium from the subunit to the regional aquifer. Concentrations of uranium in the

downgradient wells (see Figure 3-50 for groundwater elevation contours) are similar to those detected in perched groundwater samples collected from the seep (820 μg/L at IFP-SW-10), from the drainage as it infiltrates into the regional aquifer (910 μg/L at IFP-SW-05), and from perched groundwater (6700 μg/L from Hydropunch™ 11002).

Total uranium analysis in Well 2955 (in the north end of the subunit) and Well 2401 (downgradient of 2955 in the South Field) detected 8.19 μg/L and 5.13 μg/L, respectively. These data indicate that there has not been a release of uranium from the subunit in this area to the regional aquifer and suggest that the origin of regional aquifer uranium contamination is southeast of these wells, possibly near to 11051 where 2280 μg/g total uranium was detected in a soil sample at 24 feet deep.

A comparison of the concentration of constituents other than uranium detected in the upgradient and downgradient wells does not identify any constituent that appears to increase in concentration from wells located downgradient of the subunit. This suggests that uranium is the primary constituent in water recharging the regional aquifer beneath the Inactive Flyash Pile.

4.4.5 Biota

No. 4-10 ~~Impacts from the Inactive Flyash Pile are not addressed in the Operable Unit 2 RI because it is likely to be remediated. A Site wide Ecological Risk Assessment will be prepared as part of the Operable Unit 5 RI/FS to address area not likely to be remediated.~~ The ecological impacts from material left after remediation will be addressed in the Site-Wide Ecological Risk Assessment that will be prepared as part of the Operable Unit 5 RI/FS.

4.4.6 Summary

Soil, waste material, and water sample data indicate the following about the Inactive Flyash Pile:

No. 4-4, 27

- Metals, organic compounds, and radionuclides were detected above background for the surface of the Inactive Flyash Pile, and included the surface soil COCs arsenic, ~~beryllium, neptunium,~~ radium-*228*, thorium-*228*, *thorium-232*, ~~uranium (also a cross media groundwater COC),~~ and dibenzo(a,h)anthracene. These constituents were also found at varied depths in most of the samples, indicating that ~~waste~~ contaminated material has been disposed of throughout the operating period of the Inactive Flyash Pile. Other radionuclides detected above background were plutonium and strontium.

No. 4-4

- The surface soil analytical results do not suggest a pattern of surface disposal at one location in the Inactive Flyash Pile with subsequent surface spreading; a more likely scenario is the disposal of waste took place throughout the Inactive Flyash Pile.

No. 4-4, 4-31, *16*

- There are indications from field observations that elevated concentrations of uranium exist in the surface water from the drainage west of the Inactive Flyash Pile, and is contributing to the recharge of the ~~aquifer~~ *Great Miami Aquifer*.

No. 4-4 4-32

- Semivolatile compounds were detected in trace concentrations in the drainage west of the Inactive Flyash Pile. Of these, four were detected in the downstream sediment sample in Paddys Run and not in the upstream sediment sample. This suggests that the Inactive Flyash Pile may be impacting Paddys Run. Furthermore, there were additional semivolatiles detected in the downstream sediment sample which were not detected in the upstream sample, giving further credence to the Inactive Flyash Pile's impact on Paddys Run.

- Waste materials identified in samples collected from soil borings in the subunit included localized sludge-like material, clay tile drain pipe, wood, nails, wire, construction debris, and flyash. The recovered materials from the borings, except the flyash, produced elevated field measured radioactivity by an alpha-beta meter. These elevated/readings may be due to the materials having been associated with or in contact and/or cross contaminated with process materials or waste.

No. 4-4, *7*

- The subsurface soils had the surface soil COCs arsenic, ~~beryllium, cesium, neptunium,~~ radium-*228*, thorium-*228*, *thorium-232*, ~~uranium (also a cross media groundwater COC),~~ and dibenzo(a,h)anthracene. Other radionuclides detected above background were lead-210, plutonium, ruthenium, strontium, and technetium.

- The flyash generally had lower concentrations of constituents than the fill material.

- Identifiable waste materials appear to be resting on or near the interface of flyash and glacial overburden near the center of the Inactive Flyash Pile.

- Flyash and fill are in contact with the Great Miami Aquifer in the western and southern portions under the Inactive Flyash Pile.

- The highest concentrations of Aroclor-1254 and total uranium were found associated with the trace of a buried drainage that existed before the Inactive Flyash Pile was developed.

No. 4-4 4-34

- The occurrence of uranium ~~in groundwater~~ in the perched groundwater ~~system~~ appears to be related to waste materials ~~buried~~ within the pile or close to it since upgradient Hydropunch™ ~~data (from Hydropunch™~~ 11047 ~~and 11010)~~ and upgradient Well 1047 data ~~do not detect uranium~~ have uranium concentrations close to background and two orders of magnitude lower than downgradient Hydropunch™ concentrations.

No. 4-35

- Seepage in the drainage to the west may be associated with the perched groundwater. The correlation can be made that the total uranium concentrations from the Hydropunch™ samples upgradient of the seepage were of the same order of magnitude as that collected

from the proximity of the seep. Also, seepage continued for extended periods after precipitation events, which may indicate that perched groundwater is charging the seepage.

No. 4-4

- The perched groundwater analyses detected the surface soil COCs radium and uranium (also a cross-media groundwater COC). The ~~contaminated~~ perched groundwater ~~was~~ is located in saturated silty sand lenses within the till ~~material~~ beneath the flyash, and in a saturated zone of flyash that ~~was~~ is directly above the till surface. The till under the flyash pile is suspected to slope to the west, southwest, and south. Therefore, the fill till interface truncates on the surface of the Great Miami Aquifer. This ~~means that~~ is a possible existing mechanism to transport contaminants ~~vertically~~ into the Great Miami Aquifer. Also, it is suspected that the saturated flyash/fill comes into direct contact with the Great Miami Aquifer, which would be another mechanism for introducing contaminants to the Great Miami Aquifer.

No. 4-4, 27

- In the Upper Great Miami Aquifer (2000-series wells) ~~the~~ ***no*** surface soil COCs ~~neptunium and uranium~~ (also a cross-media groundwater COC) were detected. ***However, uranium-234, uranium-235/236, uranium-238, total uranium, neptunium-237, and plutonium-238 were detected above background,*** ~~An additional radionuclide, plutonium, was also detected above background. This would~~ suggest***ing*** a potential impact on the Great Miami Aquifer.

No. 4-4

- ~~Uranium was not detected in a well completed in the regional aquifer upgradient of the subunit (Well 2402), in a well completed in the north end of the subunit (Well 2955), or in a well completed downgradient of the north part of the subunit (Wells 2945 and Well 2954). This suggests that a source of regional aquifer uranium exists beneath the central part of the Inactive Flyash Pile.~~

4.5 SOUTH FIELD

Analytical results for samples collected from the South Field are presented in Appendix F. Sample analyses that detected analytes at concentrations above background (defined in Table 4-1A) will be discussed in this section. Geology and hydrogeology of the South Field referred to in this section were discussed in more detail Section 3.4.

4.5.1 Volume and Physical Characteristics of Waste

Materials in soil samples and trenches in the South Field are comprised of clean fill, construction debris, and radioactive materials mixed with the above materials and the native till. A map showing the estimated thickness of the fill material was presented as Figure 4-12. An estimated volume for

No. 4-36

the fill and waste materials in the ~~Inactive Flyash Pile and~~ South Field is 120,081 ~~216,489~~ cubic yards.

TABLE 4-48B

LEAD CONCENTRATIONS IN VERTICAL BORINGS AT THE FEMP FIRING RANGE

Depth Interval (ft)	Background	Boring Numbers											
		SP-1		SP-2		SP-3		SP-4		SP-5		SP-6	
		Total (mg/kg)	TCLP (mg/L)	Total (mg/kg)	TCLP (mg/L)	Total (mg/kg)	TCLP (mg/L)	Total (mg/kg)	TCLP (mg/L)	Total (mg/kg)	TCLP (mg/L)	Total (mg/kg)	TCLP (mg/L)
0.0-0.5	26.4	665	6.9	1250	2.0	123	0.4	63.2	NA[a]	2820	101	64.4	NA
0.5-1.0	15.58	154	1.8	2200	4.8	5.6	NA	7.7	NA	2270	21.2	31.3	NA
1.0-2.0	15.58	6.1	NA	2460 1380	8.8 9.3	4.8	NA	11.2 7.0	NA	503	1.3	35.7	NA
2.0-3.0	15.58	6.6	NA	345	1.4	5.1 17.5	NA	12.8	NA	204	2.9	17.6	NA
3.0-4.0	15.58	4.9	NA	57.4	NA	4.0	NA	7.9	NA	2.1	NA	NA	NA
4.0-5.0	15.58	5.6	NA	29.6	NA	1.6	NA	7.5	NA	11.6	NA	NA	NA

[a]NA = not analyzed.

Source: Westinghouse Environmental Management Company of Ohio

Note: Samples sieved with No. 10 sieve to remove lead fragments greater than 2 mm

Comment No. 4-152

SP-7 - Horizontal Boring										
Depth (ft)	*0-5*	*5-10*	*10-15*	*15-20*	*20-25*	*25-30*	*30-50*	*35-40*	*40-45*	*45-50*
Total Lead (mg/kg)	*1020*	*4.8*	*6.1*	*4.5*	*6.9*	*5.3*	*4.6*	*7.2*	*4.6*	*5.5*

Background = 15.8 mg/kg.
TCLP = 0.27 mg/l at 0-5 feet; not analyzed below 5 feet.

Comment No. 39

o. 40 Field. ~~Wipe samples indicate that significant radioactive contamination may have transferred to the soil that covers the solid pieces of concrete, wood, and steel.~~ The contaminated materials within these trenches are potential sources of radionuclide contamination to percolating water.

Organic compounds detected in subsurface soil samples from the South Field are presented on Figure 4-20 (see Volume II, Oversized Figures). Highest concentrations of organic compounds were detected in samples collected from the north border of the South Field, and correspond to samples detecting the highest radionuclide concentrations. Semivolatile compounds detected in South Field samples are similar to chemicals detected in samples collected from the Solid Waste Landfill; however, concentrations detected in samples from the Solid Waste Landfill are 100 fold greater than those detected in South Field samples. This suggests that mixtures of waste chemical stocks were sent to the landfill but that much less chemically contaminated materials were sent to the South Field. The distribution of organic compounds indicates that they are pervasive in the surface (Figure 4-20) but that the number of compounds is greatly reduced within the upper four feet of the soil The following table presents some data from Figure 4-18 and Figure 4-20:

o. 4-101

Boring No.	Depth (ft)	Number of Organic Compounds	Total Organic Concentrations* (μg/kg)
11188	0-0.5	15	2416
	5-6	2	45
	10-11	3	59
1977	0-0.5	16	7852
	8.5-10	2	10
	16.5-18.5	3	47
1972	0-0.5	14	69039
	0.5-1	16	12083
	2.5-4	2	17
	7.5-9	1	3
1795	1-1.5	12	2777
	3-4	2	8.6
1968	0-1	10	397
	4.5-6.5	3	71
	15.5-16.5	1	3

*Includes VOCs, SVOCs, and Pesticides/PCBs.

000070

o. 41 water samples but not in the sediment. This suggests that the drainage water ***(water seeping in the South Field)*** ~~originated as groundwater because these constituents require relatively long contact time to leach out of geologic materials. Chloride and fluoride are present at trace amounts in precipitation and so a source other than rainfall is indicated. These data support the belief that drainage water samples containing elevated uranium are representative of perched groundwater.~~ ***is rainwater that has percolated downward through the contaminated material and leached the contaminants; i.e., chloride, fluoride, and uranium. Also, these data support the belief that drainage water samples containing elevated uranium are representative of perched groundwater.***

Organic compounds are detected in sediment but not in drainage water, and it may be due to the erosion of surface soil into the drainage. This is because concentrations of organic compounds and metals found in sediment are similar to concentrations found in samples of surface soil at the South Field. Historical aerial photographs of early road construction show material similar in color to surface soil being used to construct roads and drainages.

4.5.4 Groundwater

Groundwater analytical data from the 1000-series wells in the South Field were compared to perched groundwater background concentrations developed for the site. A summary of the analytes detected above background is provided in Appendix F, Table F-2F and Table F-2G. A summary of the number of detected analytes is presented in Table 4-55 and Table 4-56. One upgradient well in the perched aquifer (1046) was sampled during Phase I. Other perched zone wells were sampled during
No. Phase I but these were not within the perched system in the South Field. Three of the wells [21191
4-103; (1516), 21192 (1517), and 21193 (1518)] monitor the regional aquifer. Phase I sampling detected ~~six~~
4-163 seven metals and isotopes for two elements that exceeded the background concentrations; no organic compounds were detected that exceeded background concentrations. Five additional monitoring wells were installed during Phase II and twelve Hydropunch™ samples were collected in order to define
No. groundwater conditions in the perched aquifer in the South Field. During Phase II, 2~~1~~2 metals
4-163 (Aluminum, Antimony, Barium, Beryllium, Chromium, Cobalt, Cyanide, Iron, Lead, ~~Magnesium,~~ Molybdenum, Nickel, Silver, Vanadium, and Zinc were not detected above background during Phase I), isotopes of six elements (neptunium-237, plutonium-238, plutonium-239/240, Strontium-90, thorium-230, thorium-232, and thorium-total were not detected above background during Phase I), and four organic compounds exceeded background concentrations. Hydropunch™ results are provided in Figure 4-23.

000071

The following conclusions are possible concerning the South Field:

No. 4-4 4-41

- Twenty-~~two~~ six organic compounds, mostly semivolatile, were detected in surface soil samples. These compounds are similar to those detected at the Solid Waste Landfill and are distributed over the surface of the subunit. Samples taken at depth indicate the compounds are also detected within the subsurface, but concentrations decrease with depth. Of the organic compounds ~~were~~ detected ~~in perched and regional groundwater at trace levels indicating no significant impact on groundwater.~~, Aroclor-1254, Aroclor-1260, benzo(a)anthracene, benzo(a)pyrene, benzo(b)fluoranthene, benzo(k)fluoranthene, dibenzo(a,h)anthracene, dieldrin, and indeno(1,2,3-cd)pyrene were the surface soil COCs detected above background.

No. 4-4, 4-41, *8*

- Isotopes of ~~nine~~ ***eight*** elements were detected in soil samples. Elevated concentrations of radionuclides are associated with waste material disposed of in the South Field. The concentrations of radionuclides decrease with depth through the fill and glacial till. The radionuclide surface soil COCs detected above background were cesium, neptunium, radium, thorium, and uranium (also a cross-media groundwater COC). Other radionuclides detected above background were plutonium, ~~ruthenium,~~ strontium, and technetium.

No. 4-4

- The surface soil COC metals detected above background in the soil were arsenic, beryllium, and chromium.

No. 4-41 *No. 18* *No. 18*

- Seven organics were detected in the ***2000-series*** groundwater ***wells*** for Phase I and seven organics for Phase II. The organic constituents detected in Phase I included diethyl phthalate at 20 ppb, 1,1-dichloroethane at 9 ppb, trichloroethene at 7 ppb, 1,1,1-trichloroethane, 1,2-dichloroethene, and acetone at 5 ppb, and bis(2-ethylhexyl)phthalate at 2 ppb. Phase II detections included acetone at 10 ppb, bis(2-ethylhexyl)phthalate at 6 ppb, di-n-butyl phthalate at 5 ppb, butyl benzyl phthalate at 2 ppb, and ~~diethyl phthalate, tributyl phosphate, and~~ 1,1,1-

No. 18 trichloroethane at 1 ppb. *Some of* these contaminants are common laboratory contaminants, and this is confirmed by the inconsistencies in the number of analytes detected from Phase I to Phase II. ***However, 1,1,1-trichloroethane and 1,1-dichloroethane may be present due to placement of wastes from maintenance activities, or other activities where solvents were used.***

No. 4-4 4-39 4-40

- Uranium contamination detected in Hydropunch™ and well samples in the southeastern portion of the South Field indicate that the Great Miami Aquifer may receive contaminated groundwater recharge from the perched groundwater north of the southeast corner and surface water at the southeast corner of the subunit.

- Trenching activities uncovered a variety of waste materials including concrete, steel pipe, sheet steel, wood, and clay tile. Surface wipe samples from some of these materials had a maximum reading of 150,000 disintegrations per minute (dpm) suggesting that the contamination is removable, so the materials are potential leaching sources of radionuclides to groundwater.

No. 4-4

- Water samples from the drainage northeast and east of the South Field detected elevated uranium concentrations, ~~indicating that the subunit has impacted surface drainage by seepage~~ which was the only surface soil COC detected in surface water in the South Field. ~~Elevated concentrations of organics were detected in sediment samples, indicating possible migration of contaminated surface soils beyond the subunit batter limits.~~ The levels of concentrations for these samples were of the same order of magnitude as the Hydropunch™ samples from the northeastern portion of the South Field. This would indicate that the drainage is possibly impacted by the seepage of perched groundwater from the northeastern portion.

No. 4-4

- The surface soil COCs in the sediment detected above background were arsenic, beryllium, ~~chromium,~~ neptunium-*237*, radium-*226, radium-228,* , thorium-*228, thorium-230, thorium-232*, uranium-*234, uranium-235/236, uranium-238, total uranium,* ~~(also a cross-media groundwater COC),~~ benzo(a)anthracene, benzo(a)pyrene, benzo(b)fluoranthene, benzo(k)fluoranthene, indeno(1,2,3-cd)pyrene, and Aroclor-1254. Other radionuclides detected above background were plutonium and strontium. This indicates the possible migration of surface soil contamination from the South Field.

No. 4-42

- ~~Perched groundwater wells detected elevated uranium concentrations in all samples. This indicates that surface disposal practices and waste trenches have impacted shallow groundwater.~~ The surface soil COCs detected above background for perched groundwater were beryllium, chromium, neptunium-*237*, radium-*226*, thorium-*228, thorium-230, thorium-232, uranium-234, uranium-235/236, uranium-238*, and *total* uranium ~~(also a cross-media groundwater COC)~~. Other radionuclides detected were plutonium and strontium. Additionally, total uranium was detected in all perched groundwater wells, which indicates an impact from the South Field.

No. 27

No. 4-42

- ~~2000 series wells detected elevated uranium concentrations downgradient of the Inactive Flyash Pile (Well 2945) and downgradient of the south end of the South Field (Well 2045). This indicates that the subunit has impacted regional groundwater quality.~~ For the 2000-series wells, the surface soil COCs detected above background were ~~chromium,~~

No. 8

o. 8

neptunium, radium-***226***, thorium-***230, thorium-232***, and uranium-***234, uranium-235/236, uranium-238, and total uranium.*** ~~(also a cross media groundwater COC).~~ Well 2945 and downgradient Well 2045 had elevated concentrations of uranium, which indicates the possibility of the South Field impacting the groundwater of the Great Miami Aquifer.

4.6.5 Biota

No. 4-10 ~~Impacts from the Active Flyash Pile are not addressed in the Operable Unit 2 RI because it is likely to be remediated. A Site wide Ecological Risk Assessment will be prepared as part of the Operable Unit 5 RI/FS to address areas not likely to be remediated.~~ The ecological impacts from material left after remediation will be addressed in the Site-Wide Ecological Risk Assessment that will be prepared as part of the Operable Unit 5 RI/FS.

4.6.6 Active Flyash Summary

Data from environmental samples collected from soil and water media in the Active Flyash Pile indicate the following:

No. 4-4 4-50
- Flyash contains elevated concentrations of metals, radionuclides, and organic compounds when compared to background concentrations for soil. When compared to background for flyash, radium, thorium, and uranium ~~two metals, five radionuclides, and nine organic compounds~~ exceeded background levels. However, it should be noted that the FEMP flyash contains approximately 70 percent bottom ash; therefore, analytical results may be skewed higher.

No. 4-4 4-51
- ~~Flyash contains elevated concentrations of VOCs when compared to literature derived background concentrations for flyash.~~ There are no background concentrations for VOCs in flyash; however VOCs were detected in flyash samples from the Active Flyash Pile. This ~~fact~~ suggests that VOCs may have been disposed of as an additional waste material in the subunit.

No. 4-4, *8, 27*
- The surface soil COCs detected above background in subsurface soils, both source and nonsource, are arsenic, beryllium, ***lead-210,*** neptunium-***237***, radium-***226, radium-228***, thorium-***228 and thorium-232***~~, and uranium (also a cross media groundwater COC)~~. Other radionuclides detected above background were lead-210, strontium, and plutonium.

No. 4-4 4-118
- Concentrations of organic compounds decrease ~~with depth~~ below the flyash/soil interface, from approximately 10 to 17 feet deep ~~in the flyash pile~~. This ~~fact~~ suggests that the organic contamination is related to surface activities after the pile was approximately half-way constructed.

No. 4-4
- ~~Metals and organic compounds detected in flyash and soil samples were not detected in shallow groundwater. This suggests that these constituents have not impacted groundwater.~~

No. 4-4
- Chemical and radiological constituents detected in sediment samples are similar to those detected in surface and subsurface flyash samples. This suggests that the origin for sediment in the subunit is the flyash and that there has been an impact from the subunit on sediment. The surface soil COCs detected above background in the sediment are arsenic, beryllium ***and*** neptunium~~, and uranium (also a cross media groundwater COC)~~. An additional radionuclide, plutonium, was also detected above background.

No. 27

000075

- The levels of radionuclides in surface flyash, subsurface flyash and sediment appears to vary within a narrow range. This suggests that the source for the radionuclides is the flyash.

No. 4-4, 27

- In the perched groundwater, the surface soil COCs detected above background were neptunium-*237* ~~and uranium (also a cross-media groundwater COC)~~. Other radionuclides detected above background were plutonium-*238,* ~~and~~ strontium-*90, uranium-234, uranium-235/236, and uranium-238.*

No. 4-4

- Based on the conceptual model of flow and constituent transport in the area and contaminants detected, perched groundwater quality near the Active Flyash Pile seems to be impacted by the South Field and not the Active Flyash Pile.

No. 4-4

- ~~Groundwater in the 2000-series wells has elevated concentrations of radionuclides with respect to background groundwater.~~ The surface soil COCs above background for the 2000-series wells in the Great Miami Aquifer are thorium-*232 and thorium-228.* ~~and uranium (also a cross-media groundwater COC). An~~ *A*dditional radionuclide*s radium-226, uranium-234, uranium-235/236, and uranium-238 were detected above background.* ~~plutonium, was also detected above background. The contaminant source is believed to be~~ Due to the proximity of the wells to the South Field, these contaminants are possibly due to the recharge originating in the South Field.

5894

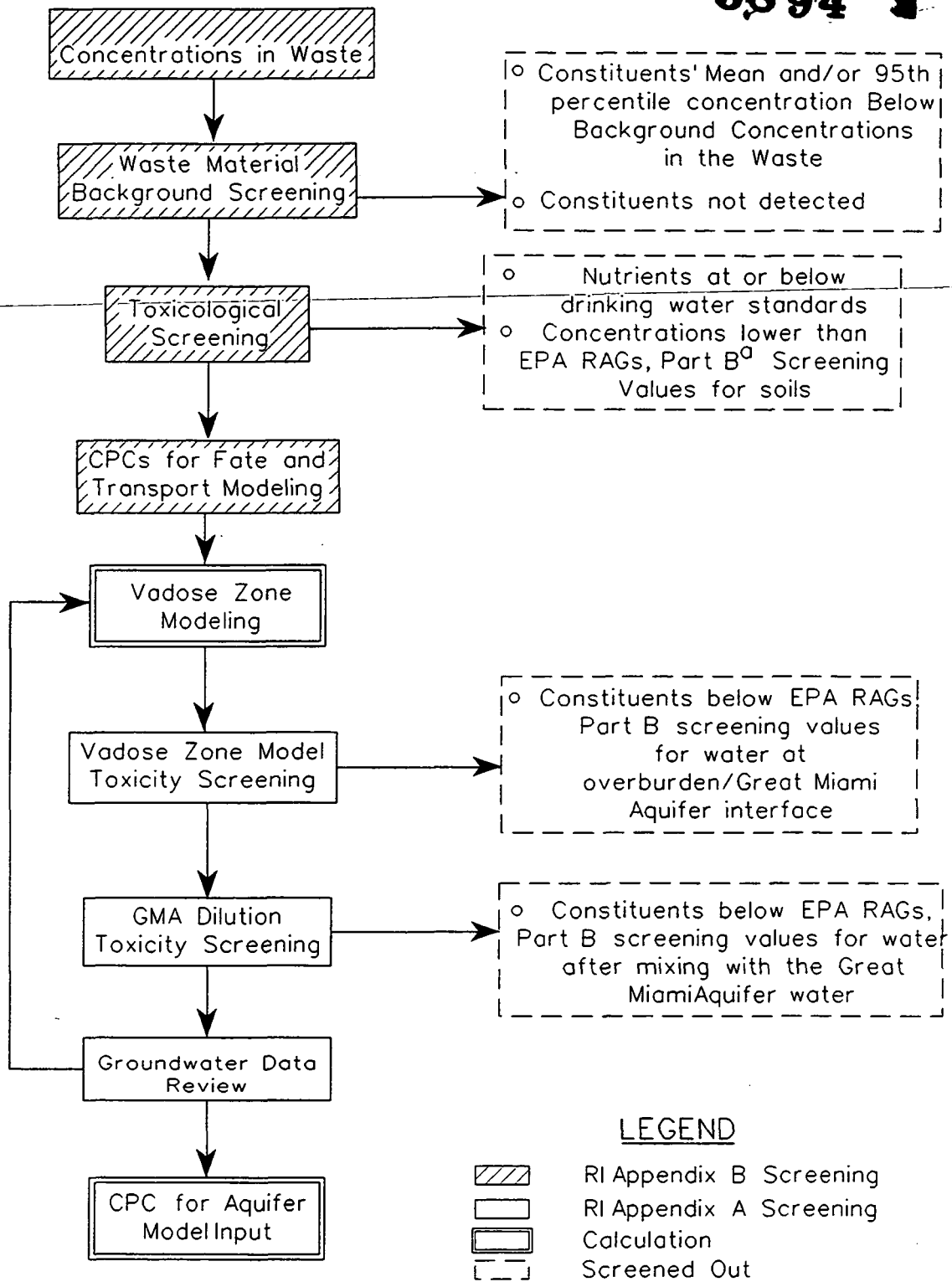

[a] EPA Risk Assessment Guidence, Part B **(EPA, 1991d).**

figa0212.dgn

FIGURE 5-16
POTENTIAL CONSTITUENT OF CONCERN SCREENING DIAGRAM

000077

that may potentially create significant risks. Figure 5-16 shows the different screening steps. These
NO. steps include ~~prescreening,~~ background screening, toxicological screening (performed and presented in
5-45 Section 6.0 and Appendix B), vadose zone output concentration screening, and Great Miami Aquifer dilution screening (presented in detail in Appendix A). Each subunit was treated separately in these screening analyses. These screening steps were applied only to the vadose zone modeling where each block was modeled individually.

If the modeling of a possible CPC through the vadose zone to the Great Miami Aquifer revealed that the peak concentrations of the constituent before or after dilution was below the screening concentration at the point of reaching the Great Miami Aquifer within 1,000 years, further modeling of the constituent was not considered necessary for the human health risk assessment. ~~The CPC concentration capable of producing 1 x 10^{-7} lifetime cancer risk for carcinogens or the concentration of the 0.1 HI for noncarcinogens was selected to be an appropriate and conservative screening level.~~
NO. Screening concentrations were calculated using EPA RAGs, Part B guidelines. If the predicted
5-45 concentration of a given constituent equals or exceeds the respective screening level concentration after mixing the Great Miami Aquifer, the constituent was included in the aquifer modeling.

No. 10 The vadose zone modeling results were compared against the Great Miami Aquifer data. If the model predictions were not in agreement with the Great Miami Aquifer data, model parameters, assumptions, and conceptual models were reviewed and modified accordingly. If the vadose zone model was refined, the vadose zone model calculations were repeated and the vadose zone model toxicity screening and the Great Miami Aquifer dilutions toxicity screening steps were repeated. This process was continued until the model predictions were in agreement with the field measured data. Detailed modeling in the Great Miami Aquifer was performed for the CPCs remaining from the Great Miami Aquifer dilution toxicity screening.

5.4.2.5 Great Miami Aquifer Modeling

The calibrated groundwater flow model for the FEMP was developed previously for use in Operable Unit 5. A detailed description of the development, calibration, and verification of the site-wide model is available in the Groundwater Modeling Report, Summary of Model Development, April 1993 (DOE 1993d). The model is based on the SWIFT III model. The modeling approach taken for Operable Unit 2 is described in detail in Appendix A-2. The Operable Unit 2 fate and transport modeling involved incorporating the vadose zone modeling results (for vadose zone, perched water

infiltration, perched water subsurface seep, and seep pathways) to determine loading rates (both concentration and volume) to the Great Miami Aquifer from the subunits. In addition, surface water infiltration from the Storm Sewer Outfall Ditch or Paddys Run to the Great Miami Aquifer was used as an additional source term to the model. The model then simulated the transport of constituents away from these source areas. Figure 5-7 presents a conceptual model of fate and transport through groundwater. Dispersion, retardation, and decay were factored into the contaminant transport process. SWIFT III simulations of CPC transport in the Great Miami Aquifer were run up to 1,000 years.

5.4.4.3 Inactive Flyash Pile/South Field

The Operable Unit 2 SWIFT III model was calibrated for uranium-238. Uranium-238 was selected for calibration because of the high detection frequency, very sensitive analytic procedure, projection as a main parameter of concern for risk assessment, and for the determination and modeling of hot spots. Use of uranium at the FEMP site began in the 1950s. Current uranium-238 concentrations in
No. 9 the Great Miami Aquifer in the vicinity of the South Field area were detected as high as ~~384~~ *707* pCi/L at Well 2945 in the validated *un*filtered samples and ~~on site (non-~~validated~~)~~ analysis indicated that the total uranium concentration was as high as ~~2100~~ *2070* μg/L (equivalent to ~~587~~ *570* pCi/L of uranium-238).

SWIFT III was first run using a K_d of 8.4 for uranium (Uranium Partition Coefficient Evaluation Study for Operable Unit 2, 1993) in the Great Miami Aquifer. SWIFT III model results indicated that it will take more than 200 years to reach current concentrations levels in the Great Miami Aquifer. Since uranium breakthrough for the vadose zone pathway for K_d of 8.4 ml/g does not occur until after 160 years, calibration cannot be done by increasing waste concentration alone. Through the calibration process, the K_d value in the Great Miami Aquifer (and ODAST) was reduced to 1.48 ml/g. At 40 years from placement of waste in the Inactive Flyash Pile and South Field subunits (approximately current conditions), model predicted uranium-238 concentrations in the Great Miami
No. 9 Aquifer to be 134 pCi/L in the grid cell containing the Well 2945 (Figure 5-19), ***as compared to 707 pCi/L measured at Well 2945***. This is considered a good calibration of the model given the limitations that source areas smaller than 125 x 125 feet cannot be assigned. The uranium breakthrough close to the Well 2945 is due to subsurface seeps. Although subsurface seeps do not travel laterally 125 feet on the unsaturated Great Miami Aquifer, model limitations require that subsurface seep mass be loaded uniformly over the full 125 x 125 foot cell. If subsurface seeps infiltrate through a 20- to 50-foot wide area, this can easily result in underestimation of concentration by the model near subsurface seep at 40 years by a factor of 3 to 6. Since overall maximum loading is due to the vadose zone pathway (Figure 5-20), which is uniformly distributed over the full grid cell, the maximum predicted uranium-238 concentrations for the baseline risk assessment are not very sensitive to the above mentioned limitation of the model. The predicted uranium-238 plume shape at 40 years due to loading from the Inactive Flyash Pile and South Field is in general agreement with the field observations.

Figure 5-20 shows the loading of uranium-238 to the Great Miami Aquifer from the Inactive Flyash Pile and South Field. Figure 5-20 shows that uranium-238 reaches the Great Miami Aquifer very early, and loading increases very slowly up to 100 years (main contribution is from perched water

5894

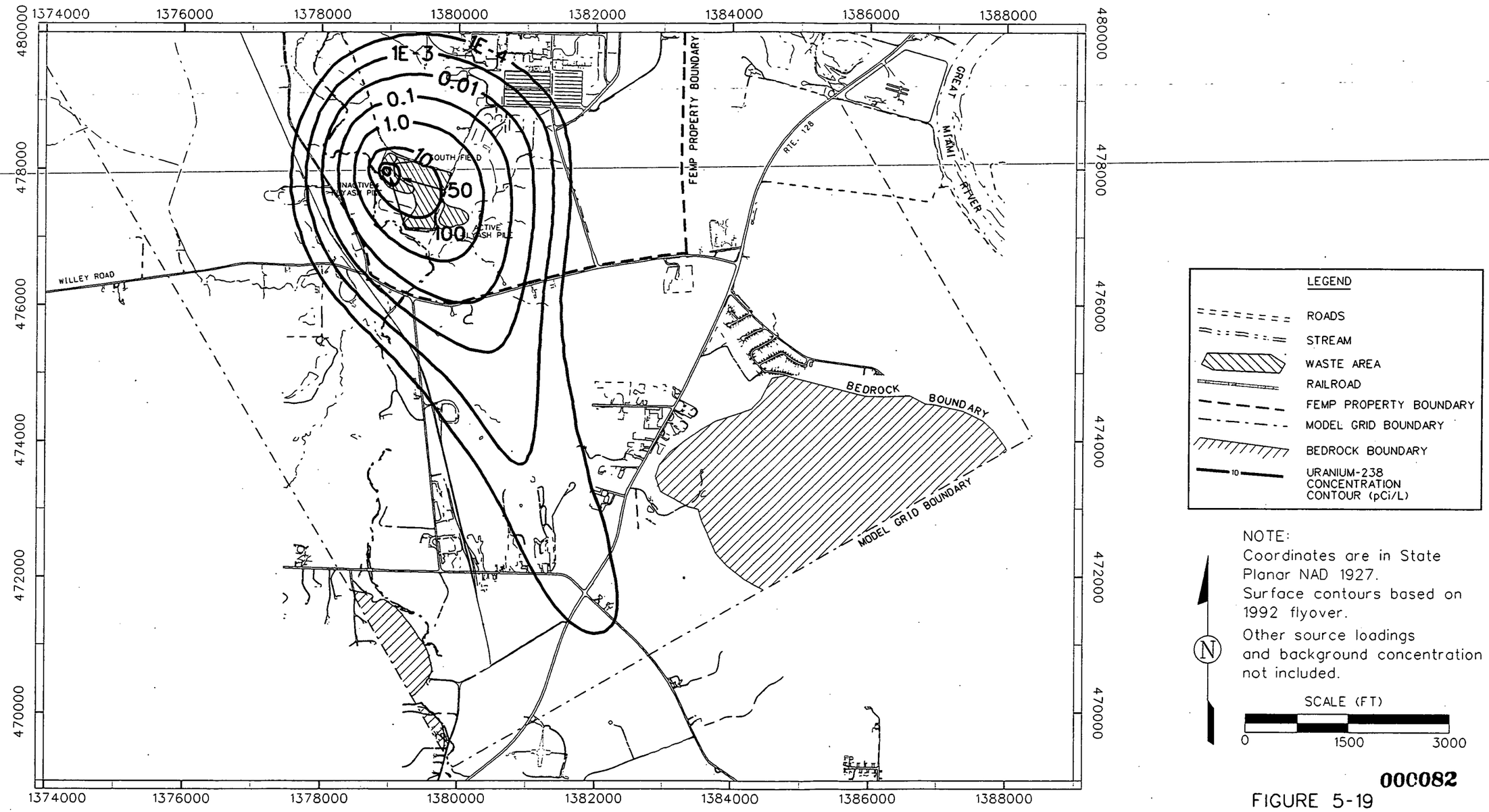

000082

FIGURE 5-19
PROJECTED INCREASE IN URANIUM-238 CONCENTRATION IN GREAT MIAMI AQUIFER AT 40 YEARS DUE TO LOADING FROM THE INACTIVE FLYASH PILE AND SOUTH FIELD

MAXIMUM PREDICTED INCREASE IN CONCENTRATION = 134 pCi/L
MAXIMUM MEASURED CONCENTRATION = 707 pCi/L

fig0519.dgn

FER\CRUZR\SECTION6\FIG06-2.DRW\August 30, 1994

5894

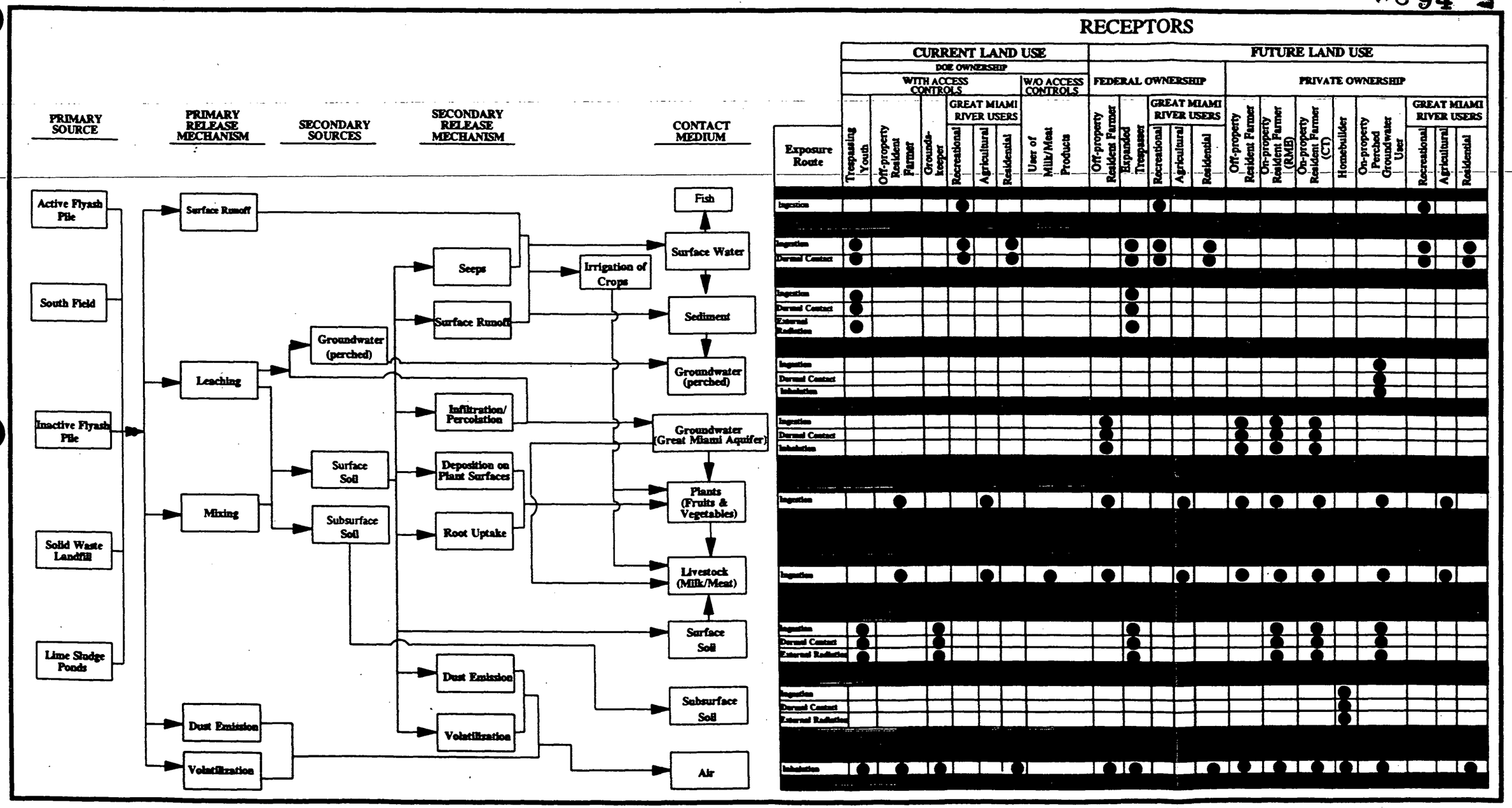

FIGURE 6-2 GENERAL CONCEPTUAL SITE MODEL/OPERABLE UNIT 2

000083

Comment No. 48

TABLE 6-1

GENERIC DESCRIPTION OF EXPOSURE SCENARIOS AND EXPOSURE POINT CONCENTRATIONS OPERABLE UNIT 2 BASELINE RISK ASSESSMENT

Current Land Use	Receptor	Direct Contact Medium	Route of Exposure		Exposure Point Concentration
Current with Access Controls (current use of FEMP continues, DOE ownership)	Trespassing Youth	surface soil	incidental ingestion dermal contact external radiation		surface soil within subunit
		air	inhalation	particulates, volatiles, and gases	maximum estimated on-subunit current concentration derived from air modeling
		surface water	incidental ingestion dermal contact		surface water within subunit
		sediment	incidental ingestion dermal contact external radiation		sediment within subunit
	Off-Property Resident Farmer (adult and child), homegrown produce off-property, livestock grazing off-property	air	inhalation	particulates, volatiles, and gases	maximum estimated off-property current concentrations derived from air modeling
		plants (homegrown produce)	ingestion	fruits and vegetables	maximum estimated off-property current concentrations derived from air modeling
		livestock (grazing off-property)	ingestion	milk beef	maximum estimated off-property current concentrations derived from air modeling
	Groundskeeper	air	inhalation	particulates, volatiles and gases	maximum estimated on-subunit current concentration derived from air modeling
		surface soil	incidental ingestion dermal contact external radiation		surface soil within subunit

5894

TABLE 6-1
(Continued)

Current Land Use	Receptor		Direct Contact Medium	Route of Exposure		Exposure Point Concentration
Current with Access Controls (current use of FEMP continues, DOE ownership) (Continued)	Great Miami River Users	Recreational User	surface water	ingestion dermal contact		estimated concentrations in the Great Miami River
			fish	ingestion		estimated concentrations in the Great Miami River
		Agricultural User	plants (homegrown produce irrigated with water from Great Miami River)	ingestion	fruit and vegetables	estimated concentrations in the Great Miami River
			livestock (grazing on crops irrigated with water from Great Miami River)	ingestion	beef and milk	estimated concentrations in the Great Miami River
		Household User	surface water	inhalation ingestion dermal contact	particulates, volatiles, and gases	estimated concentrations in the Great Miami River
Current without Access Controls (current use of FEMP continues)	User of Meat and Milk Products		livestock (grazing on-property)	ingestion of milk and beef		maximum estimated on-property current concentrations derived from air modeling

000085

TABLE 6-1
(Continued)

Future Land Use	Receptor	Direct Contact Medium	Route of Exposure		Exposure Point Concentration
Federal Ownership	Future Off-Property Farmer (adult and child), homegrown produce off-property, grazing off-property, groundwater off-property	air	inhalation	particulates, volatiles, and gases	maximum estimated off-property future concentrations derived from air modeling
		plants (homegrown produce)	ingestion	fruits and vegetables	maximum estimated off-property future concentrations derived from air modeling and groundwater modeling
		livestock (grazing at property boundary)	ingestion	milk and beef	maximum estimated off-property future concentrations derived from air modeling and groundwater modeling
		groundwater	ingestion dermal contact inhalation of volatiles released during household use		modeled groundwater concentrations at fenceline when concentration is greatest
	Expanded Trespasser (youth)	air	inhalation	particulates, volatiles, and gases	maximum estimated on-subunit air concentrations derived from air modeling
		surface soil	incidental ingestion dermal contact external radiation		surface soil within subunit
		surface water	incidental ingestion dermal contact		surface water within subunit
		sediment	ingestion dermal contact external radiation		sediment within subunit

000086

5894

TABLE 6-1
(Continued)

Future Land Use	Receptor		Direct Contact Medium	Route of Exposure		Exposure Point Concentration
Federal Ownership (Continued)	Great Miami River Users	Recreational User	surface water	ingestion dermal contact		estimated concentrations in the Great Miami River
			fish	ingestion		estimated concentrations in the Great Miami River
		Agricultural User	plants (homegrown produce irrigated with water from Great Miami River)	ingestion	fruit and vegetables	estimated concentrations in the Great Miami River
			livestock (grazing on crops irrigated with water from Great Miami River)	ingestion	beef and milk	estimated concentrations in the Great Miami River
		***Household* User**	surface water	inhalation ingestion dermal contact	particulates, volatiles and gases	estimated concentrations in the Great Miami River
	Future Off-Property Farmer (adult and child), homegrown produce off-property, grazing off-property, groundwater off-property		air	inhalation	particulates, volatiles, and gases	maximum estimated off-property future concentrations derived from air modeling
			plants (homegrown produce)	ingestion	fruits and vegetables	maximum estimated off-property future concentrations derived from air modeling and groundwater modeling
			livestock (grazing at property boundary)	ingestion	milk and beef	maximum estimated off-property future concentrations derived from air modeling and groundwater modeling
			groundwater	ingestion dermal contact inhalation of volatiles released during household use		modeled groundwater concentrations at fenceline when concentration is greatest

TABLE 6-1
(Continued)

Future Land Use	Receptor	Direct Contact Medium	Route of Exposure		Exposure Point Concentration
Without Federal Ownership	Future On-Property Resident Farmer (adult and child), homegrown produce on-subunit, livestock grazing on-property, groundwater on-property; will include RME and CT estimates	air	inhalation	particulates, volatiles, gases, and indoor radon	maximum estimated on-subunit future concentrations derived from air modeling; radon estimated from soil radium concentrations
		plants (homegrown produce)	ingestion	fruits and vegetables	maximum estimated on-subunit future concentrations derived from air modeling and groundwater modeling of the Great Miami Aquifer.
		livestock (grazing on property)	ingestion	milk and beef	maximum estimated on-subunit future concentrations derived from air modeling and groundwater modeling of Great Miami Aquifer
		groundwater	inhalation	particulates, volatiles, and gases	groundwater concentration in Great Miami Aquifer underlying subunit at time when concentration is greatest
	Future On-Property Resident Farmer (adult and child), homegrown produce on-property, livestock grazing on-subunit, groundwater on property; will include RME and CT estimates (continued)	surface soil	ingestion dermal contact incidental ingestion dermal contact external radiation		surface soil within subunit
	Future Homebuilder	waste material/subsurface soil	external radiation incidental ingestion dermal contact		subsurface soil within subunit
		air	inhalation	particulates, volatiles, and gases	air concentrations at construction site based on modeling

TABLE 6-1
(Continued)

Future Land Use	Receptor	Direct Contact Medium	Route of Exposure		Exposure Point Concentration
Without Federal Ownership (Continued)	Future Perched Groundwater User, homegrown produce on-subunit, groundwater on-property	air	inhalation	particulates, volatiles, gases, and indoor radon	maximum estimated on-subunit future concentrations derived from air modeling; radon estimated from soil radium concentrations
		plants (home grown produce)	ingestion	fruits and vegetables	maximum estimated on-subunit future concentrations derived from air modeling and groundwater modeling of the Great Miami Aquifer
		livestock (grazing on property)	ingestion	milk and beef	maximum estimated on-subunit future concentrations derived from air modeling and groundwater modeling of the Great Miami Aquifer
		perched groundwater directly underlying subunit	ingestion dermal contact inhalation of volatiles released during house use		perched groundwater concentrations directly underlying the subunit at time when concentrations are greatest
		surface soil	incidental ingestion dermal contact external radiation		surface soil within subunit

Comment No. 6-31, *49*

- Agricultural Use
  - Consumption of beef and milk produced using contaminated water
  - Consumption of fruits and vegetables produced using contaminated water

- Residential Use
  - Ingestion of drinking water
  - Inhalation of VOCs during household use
  - Dermal contact while bathing

Receptors listed in the Risk Assessment Work Plan Addendum not evaluated under current land use assumptions for this risk assessment include:

- Visitor - This scenario is intended to evaluate exposures incurred by the activities of a regular visitor to the FEMP site who is not covered by a health and safety or radiation protection program. An example of this receptor would be a delivery person making regular deliveries to a given building on site. This receptor was not considered applicable, since no visitor would consistently visit the Operable Unit 2 Study Area.

- On-Property Building User - This scenario considers risks from occupancy of an existing on-site building by a hypothetical receptor. This receptor was not considered since no existing habitable structures exist in Operable Unit 2.

- Hunter - this scenario examines risks due to consumption of animal products from wild animals found on the FEMP property. This receptor, as stated in the Risk Assessment Work Plan Addendum, will be evaluated in Operable Unit 5.

To evaluate risk to potential future receptors, it is assumed that the FEMP site will either be retained by the federal government (federal ownership) or will be released for private development (without federal ownership). If it is assumed that the most likely option of the FEMP site under federal ownership is continued restrictive access, therefore, the most likely future receptor might be an expanded trespasser. Potential exposures to an off-property farm family are also evaluated, assuming that the most likely off-site future land use would be agricultural. Specific exposure pathways by which these receptors may be exposed to contaminants on or migrating from Operable Unit 2 source areas are listed in Table 6-1.

For the purpose of establishing preliminary remediation goals (PRGs) for the Future Land Use With Continued Federal Ownership scenario, an on-property trespassing receptor was established. Under this exposure scenario, access to the site would be restricted and discouraged through the construction and maintenance of signs, fences, and locked gates around the perimeter of the restricted area. Despite these controls, it was assumed that trespassing would occur. The expanded trespasser scenario assumes a youth (ages 6 to 18) trespasses 110 days per year for two hours each day and the

same person trespasses as an adult (ages 18 to 50) 40 days per year for one hour each day. Thus receptor and the associated exposure factors apply only to Operable Units 1, 2, 3, and 4. The risk assessment for the Operable Unit 5 FS will include additional trespassing and recreational exposure scenarios, which are to be fully developed on a site-wide basis within the Operable Unit 5 RI/FS. A full array of trespassing and recreational exposure scenarios from no trespassing through full recreational use of the site will be developed.

As summarized in Table 6-1, future land use receptors, assuming federal ownership, include:

- Expanded Trespasser - This scenario assumes that the same visitor will routinely visit what is now the Operable Unit 2 Study Area. The expanded trespasser is assumed to wander unrestricted over the entire site. Exposure routes include:

  - Inhalation of fugitive dust, VOCs, and gases.
  - Incidental ingestion of, dermal contact with, and external radiation from contaminated soil.
  - Incidental ingestion of and dermal contact with surface water.
  - Incidental ingestion of, dermal contact with, and external radiation from contaminated sediment.

- Off-Property Resident Farmer (Adult and Child) - This scenario assumes that a farm family lives immediately adjacent to the FEMP property boundary. Exposure routes for this receptor include those listed for the same receptor assuming current land use, in addition to ingestion, dermal contact, and inhalation from groundwater.

No. 6-33

- ~~User of the Great Miami River (Adult and Child) - This scenario considers risks to an off-property resident who uses the river for recreational purposes. Exposure routes include:~~

  ~~- Incidental ingestion of and dermal contact with surface water.~~
  ~~- Incidental ingestion of, dermal contact with, and external radiation from sediment.~~
  ~~- Ingestion of fish.~~

Under the current scenario, the user of the Great Miami River was evaluated for three exclusive uses. This exposure scenario evaluates risks associated with the Great Miami River for recreational, agricultural, and residential uses. It is assumed that the preceding use receptors are exclusive. Exposure routes for each receptor include:

- Recreational Use
  - Ingestion of and dermal contact with surface water
  - Ingestion of fish

- Agricultural Use
  - Consumption of beef and milk produced using contaminated water
  - Consumption of fruits and vegetables produced using contaminated water

- Residential Use

000091

Comment No. 50

- Ingestion of drinking water
- Inhalation of VOCs during household use
- Dermal contact while bathing

If the FEMP property does not remain under the federal ownership, it is assumed that it will be held in private ownership and developed for agricultural use. As summarized in Table 6-1, future land use receptors, assuming private ownership, include:

- Reasonable Maximum Exposure (RME) On-Property Resident Farmer Receptor (Adult and Child) - This exposure assumes that a farmer resides on the property and conducts agricultural activities. Typical activities may include food and feed production, livestock production, and general farm work. This scenario includes only household use of perched groundwater because the perched groundwater zone would not be sufficient to support agricultural uses. Exposure routes include:

  - Inhalation of fugitive dust, VOCs, and gases.
  - Ingestion of groundwater (separate evaluations for groundwater from the Great Miami Aquifer and for perched groundwater).
  - Dermal contact and inhalation while using groundwater in the home.
  - Consumption of foodstuff grown on the property including vegetables, meat, and milk.
  - Incidental ingestion of, external radiation from, and dermal contact with soil.
  - Inhalation of indoor radon.

- Central Tendency (CT) On-Property Resident Farmer Receptor (Adult and Child) - This exposure assumes that a farmer resides on the property and conducts agricultural activities. This exposure is similar to the RME on-property resident farmer with modifications of exposure parameter values to more closely reflect values typical of the CT of exposure. Exposure routes for this receptor include those listed for the RME on-property resident farmer receptor, excluding ingestion of perched groundwater.

- Future Home Builder - This exposure scenario involves exposures to workers building residences or other structures within Operable Unit 2. This scenario includes only household use of perched groundwater because the perched groundwater zone would not be sufficient to support aggricultural uses. Exposure routes include:

  - Incidental ingestion of, and dermal contact with, and external radiation from soil.
  - Inhalation of fugitive dust, VOCs, and gases.

- A Perched Groundwater User - This exposure scenario involves exposures to users of perched groundwater within Operable Unit 2. Exposure routes include:

  - Inhalation and dermal contact while using perched groundwater
  - Ingestion of perched groundwater

No. 6-33

- ~~User of the Great Miami River (Adult and Child) - This scenario considers risks to an off-property resident who uses the river for recreational purposes. Exposure routes include:~~

  ~~- Incidental ingestion of and dermal contact with surface water.~~

-11 CPCs for this risk assessment were selected using a statistical and toxicological screening process which is described in detail in Appendix B.2.0. Statistical analyses compared and measured on-site concentrations of each detected constituent to background and the 95th percentile concentrations of that same constituent in the same medium. Constituents whose concentration levels were not statistically greater than background or the 95th percentile concentrations were eliminated from further consideration in the risk assessment. Exceptions to the selection procedure are outlined in

No. 6-3 Appendix B.2.4 and include Group A and B chemical carcinogens (Section B.2.5.1.2) and radionuclides which were possible CPCs based on background screening. In the toxicological screening, each constituent detected above background in a given medium was compared to conservative toxicological screening criteria including risk-based screening values which were derived

No. 6-11, *No. 48* using EPA Risk Assessment Guidance Part B (EPA ~~1991d~~ *1991c*). Laboratory contaminants (identified during data validation), essential micronutrients and macronutriens (Ca, Mg, etc.), and ubiquitous minerals (Si, Cl, etc.) were excluded as CPCs. Calculated EPA screening values were based ona carcinogenic risk of 1.0×10^{-7} and a noncarcinogenic Hazard Index (HI) of 0.1. Constituents that were present below screening levels were excluded from quantification in the risk assessment. Details of the CPC identification process for Operable Unit 2 are presented in Section B.2.4.

Tables 6-2 through 6-6 summarize the Operable Unit 2 CPCs identified by media for each subunit. The detailed results of application of the CPC selection process to each medium within each operable unit subunit are described in Section B.3.0 of Appendix B.

6.2.3 Exposure Assessment

The exposure assessment is the determination of the magnitude of contact that a potential receptor may have with site-related CPCs. The general procedure for conducting an exposure assessment involves the following three steps: (1) characterization of the physical setting, (2) identification of exposure pathways, and (3) quantification of exposure.

In the first step, the general physical characteristics of the site and characteristics of potential receptor populations are described. Physical characteristics of the Operable Unit 2 subunits are summarized in detail in Section 3.0 of this RI report.

Exposure Point Concentrations for Groundwater

Current exposures to groundwater at the FEMP will be addressed as part of the Operable Unit 5 RI. Exposure to potential future concentrations of constituents in groundwater from each operable unit are addressed during each operable unit RI baseline risk assessment. Future exposure point concentrations for groundwater are determined from the results of groundwater transport modeling, as described in detail in Section 5.0 and Appendix A.

For assessment of exposures to constituents migrating in groundwater from the South Field and Inactive Flyash Pile, source terms from these two subunits were combined. For assessment of exposures to contaminants migrating from the Active Flyash Pile, Solid Waste Landfill, and Lime Sludge Ponds, independent source terms were derived.

Soil CPCs for each subunit (Inactive Flyash Pile and South Field combined) were subjected to leachate estimations as described in Section 5.4.2.1. CPCs determined to be present in leachate
No. 6-11 above screening criteria (derived from EPA ~~Region III~~ RAGs Part B risk of 1.0 x 10^{-7} and a HI of 0.1) were then modeled in the vadose zone using the methodology outlined in Section 5.4.2.2. Leachate concentrations are modeled through the vadose zone to the regional aquifer to yield the calculated future concentrations in the aquifer directly underlying the waste area. Concentrations of CPCs determined to be present at this interface at levels above EPA Region III tap water criteria (risk of 1 x 10^{-7} and a HI of 0.1) were then selected as groundwater CPCs; their concentrations were estimated at specific locations (on-subunit, on-property, and off-property).

Off-property concentrations of constituents in groundwater were calculated using the regional aquifer
No. 48 model, SWIFT III (Geotrans 1987*b*). The maximum calculated concentrations in the aquifer underlying the Active Flyash Pile; South Field and Inactive Flyash Pile Area (combined); Solid Waste Landfill; and Lime Sludge Ponds were used to estimate on-subunit exposures. The maximum calculation concentrations on-property and at the fenceline were used for exposure point concentrations for on-property and off-property future groundwater exposures. Details of the model and parameters used to calculate future CPC concentrations in the Great Miami Aquifer are presented in Section 5.0. The locations of calculated maximum off-property concentrations of contaminants transported from the waste areas of Operable Unit 2 by groundwater are also shown in Section 5.0.

relationship between the magnitude and type of exposure and severity or probability of human health effects for each CPC. The toxicity assessment, Section B.2.5 of Appendix B, contains a compilation of toxicity values for CPCs. Summaries of the toxic effects associated with major CPCs are included as toxicity profiles collected in Attachment II, Appendix B.

6.2.5 Risk Characterization

Risk characterization is the final step in the risk assessment process, combining the information developed in the exposure assessment (Section B.2.4) and the toxicity assessment (Section B.2.5) . Risk characterization is discussed in detail in Section B.2.6 of Appendix B. The potential of a CPC to cause carcinogenic effects is presented as the incremental lifetime cancer risk (ILCR). Potential noncarcinogenic effects are presented as hazard quotients (HQs) or HIs, as defined in Section B.2.6 of Appendix B.

All site-related risks in the risk assessment are calculated without subtracting the contribution from natural background. In some areas in Operable Unit 2, the concentrations of CPCs are only slightly above background levels. Therefore, it is informative to calculate the risks from background contributions to provide a point of comparison for the site-related risk estimates.

Risks and HIs are calculated for background concentrations of CPCs in soil and groundwater using the same exposure pathways quantitatively evaluated for the RME on-property resident farmer for soil. Exposure point concentrations, which are dependent on the results of air and groundwater modeling, were derived assuming background soil concentrations for the source terms in both groundwater and soil modeling. The parameter values used for calculating background intakes are also the same as those used for evaluating subunit-specific risks to the RME on-property resident farmer. Soil concentrations used for background risk and hazard calculations are calculated UCL values for the site-specific background soil sample analytical results.

6.3 RESULTS

This section presents the COCs and results of risks and hazards from each subunit as well as
No. 6-4 cumulative risk from Operable Unit 2 as a whole. COCs are constituents (i.e., CPCs) which remain
No. 44 a concern ***(greater than 1 x 10^{-6} ILCR or 0.2 HI)*** after baseline risks have been calculated. Summary of tables in this section present the total risks and hazards posed to each receptor via the various

000095

pathways (e.g., soil, sediment, homegrown produce, etc.). Additionally, summaries of major contributors to risks and hazards by

from radium-226 (~~11.55~~ 23.27 percent), radium-228 (~~3.84~~ 7.69 percent), ~~and~~ thorium-228 (~~8.92~~ 17.85 percent), and thorium-232 (19 percent) in soil via external radiation and from arsenic (~~3.88~~ 8.28 percent) ~~and beryllium (70.59 percent)~~ in soil via dermal contact. ~~Risk to the off property farmer from ingestion of homegrown produce was due to the estimated uptake of arsenic (66.17 percent) and beryllium (8.43 percent).~~ Exposure of the groundskeeper to contaminated soil was

No. 52 associated with a risk of ~~9.2~~ ~~6.9~~ *7.9* x 10^{-5}. Exposure to this receptor was mostly from radium-226, radium-228, thorium-228, and ~~beryllium~~ thorium-232 which accounted for ~~18 percent and 63 percent, respectively,~~ 82 percent combined of the total risk to this receptor. Arsenic also contributed an additional 10 percent of the total receptor risk. No exposures resulted in HIs exceeding 1.0.

Tables 6-9A and 6-9B summarize total risks and hazards by media, respectively, associated with the Active Flyash Pile for receptors assuming future land use. Tables 6-10A and 6-10B present the major contributors by media to total risks and hazards, respectively, posed to the selected receptors. The greatest risks associated with the Active Flyash Pile are from ~~direct contact with~~ external radiation via surface soil (surface flyash material) and ingestion of groundwater. Total estimated risks to the expanded trespasser ~~slightly~~ exceeded the ~~1.0 x 10^{-4}~~ 1.0 x 10^{-3} level due mostly to the estimated presence of ~~beryllium~~ radium-226, radium-228, throrium-228, thorium-232, neptunium-237, and arsenic in flyash material which accounted for ~~87.32~~ 86.5 percent of the total risk to this receptor.

Total estimated risk to the off-property farmer exceeded the ~~1.0 x 10^{-6}~~ 1.0 x 10^{-5} level due mostly to direct exposure to the estimated future concentrations of uranium-234 and uranium-238 and in groundwater which together accounted for about ~~65~~ 56 percent of total risk to this receptor. The estimated presence of ~~arsenic~~ strontium-90 in flyash material accounted for another ~~12~~ 14.61 percent of total risk to this receptor due to its estimated deposition on produce.

Total estimated risks to future on-property residents were greatest for the RME farmer. Total risks to this receptor was 1.9 x 10^{-3} due mostly to the presence of ~~neptunium-237, radium-228, and thorium-228 in surface flyash material which accounted for about 73 percent of total risk to this receptor (equal to 1.4 x 10^{-3} total radiological risk to soil); and arsenic in surface flyash material which accounted for 21 percent of total risk to this receptor (equal to 4.0 x 10^{-4} total chemical risk to soil). Risk due to direct contact with contaminants in groundwater accounts for only 2.5 percent of total risk (equal to 4.7 x 10^{-5} total radiological risk in groundwater) to this receptor~~ uranium-234 and uranium-238 in groundwater which accounted for 54.4 percent of the total receptor risk.

TABLE 6-9A

ACTIVE FLYASH PILE
FUTURE LAND USE
SUMMARY OF TOTAL CARCINOGENIC RISK BY MEDIA

Media	Expanded Trespasser	Off-Property Resident Farmer	Off-Property Resident Child	On-Property Resident Farmer (RME)	On-Property Resident Child	Great Miami River User Rec.	Res.	Agric.
Soil								
Total Rad Risk	3.8E-05	1.1E-07	1.9E-09	1.1E-06	1.9E-08	N/A[a]	N/A	N/A
Total Chem Risk	6.3E-06	6.7E-08	5.7E-09	6.7E-07	5.7E-08	N/A	N/A	N/A
Total Risk	4.5E-05	1.7E-07	7.6E-09	1.7E-06	7.6E-08	N/A	N/A	N/A
Sediment								
Total Rad Risk	2.8E-06	N/A	N/A	N/A	N/A	N/A	N/A	N/A
Total Chem Risk	1.2E-06	N/A	N/A	N/A	N/A	N/A	N/A	N/A
Total Risk	4.0E-06	N/A	N/A	N/A	N/A	N/A	N/A	N/A
Groundwater								
Total Rad Risk	N/A	6.4E-06	2.7E-07	4.7E-05	2.0E-06	N/A	N/A	N/A
Total Chem Risk	N/A	3.9E-09	7.8E-10	9.3E-15	1.9E-15	N/A	N/A	N/A
Total Risk	N/A	6.4E-06	2.8E-07	4.7E-05	2.0E-06	N/A	N/A	N/A
Surface Water								
Total Rad Risk	1.9E-07	N/A	N/A	N/A	N/A	-	-	N/A
Total Chem Risk	5.0E-07	N/A	N/A	N/A	N/A	1.4E-09	7.7E-09	N/A
Total Risk	6.9E-07	N/A	N/A	N/A	N/A	1.4E-09	7.7E-09	N/A
Homegrown Produce (Dust Affected)								
Total Rad Risk	N/A	7.2E-09	***5.1E-10***	7.3E-08	5.1E-09	N/A	N/A	N/A
Total Chem Risk	N/A	1.3E-07	4.4E-08	1.3E-06	4.4E-07	N/A	N/A	N/A
Total Risk	N/A	1.4E-07	4.4E-08	1.4E-06	4.5E-07	N/A	N/A	N/A
Homegrown Produce			**(Groundwater Affected)**			**(GMR Surface Water Affected)**		
Total Rad Risk	N/A	3.0E-06	***2.1E-07***	2.4E-05	1.7E-06	N/A	N/A	-
Total Chem Risk	N/A	9.4E-10	***1.9E-10***	***3.4E-15***	1.2E-15	N/A	N/A	3.0E-09
Total Risk	N/A	3.0E-06	***2.1E-07***	2.4E-05	1.7E-06	N/A	N/A	3.0E-09
Beef/Milk (Dust Affected)								
Total Rad Risk	N/A	1.1E-09	1.9E-10	1.2E-08	1.9E-09	N/A	N/A	N/A
Total Chem Risk	N/A	4.6E-08	1.2E-08	4.6E-07	1.2E-07	N/A	N/A	N/A
Total Risk	N/A	4.7E-08	1.2E-08	4.7E-07	1.2E-07	N/A	N/A	N/A
Beef/Milk			**(Groundwater Affected)**			**(GMR Surface Water Affected)**		
Total Rad Risk	N/A	9.2E-07	1.7E-07	7.2E-06	1.3E-06	N/A	N/A	-
Total Chem Risk	N/A	2.6E-10	6.0E-11	6.3E-16	1.5E-16	N/A	N/A	5.5E-10
Total Risk	N/A	9.2E-07	1.7E-07	7.2E-06	***1.3E-06***	N/A	N/A	5.5E-10

[a]N/A signifies that exposure of the receptor to the indicated medium is not applicable.

Comment No. 6-16, 42

FER\CRU2RI\TLC\SECTION6\TAB6-9A.NEW\August29, 1994 9:13am

5894

TABLE 6-10A

ACTIVE FLYASH PILE
SUMMARY OF TOTAL CARCINOGENIC RISK
FOR SELECTED FUTURE LAND USE RECEPTORS
OPERABLE UNIT 2 REMEDIAL INVESTIGATION
FERNALD ENVIRONMENTAL MANAGEMENT PROJECT

Receptor:	Federal Ownership								Private Ownership			
	Off-Property Resident Farmer				Expanded Trespasser				On-Property Resident Farmer (RME)[a]			
			COC[b]				COC				COC	
Media	Receptor Risk	% Total Risk	Major Risk Contributors	% Risk of Total	Receptor Risk	% Total Risk	Major Risk Contributors	% Risk of Total	Receptor Risk	% Total Risk	Major Risk Contributors	% Risk of Total
Soil	1.7E-07[c]	1.60%	-[d]		4.5E-05	90.42%	Ra-226	25.25%	1.7E-06	2.07%	-	
							Th-232	20.60%				
							Th-228	19.33%				
							Arsenic	10.75%				
							Ra-228	8.33%				
							Neptunium	2.22%				
Groundwater	6.4E-06	59.38%	U-238	36.24%	NA[e]		-		4.7E-05	56.53%	U-238	35.81%
			U-234	18.74%							U-234	18.58%
Sediment	NA		-		4.0E-06	8.09%	Ra-226	4.00%	NA		-	
							Arsenic	2.11%				
Beef/Milk (Groundwater Affected)	9.2E-07		-		NA		-		7.2E-06	8.63%	Sr-90	7.22%
Home Grown Produce (Dust Affected)	1.4E-07[c]	1.30%	-		NA		-		1.4E-06	1.69%	Arsenic	1.43%

5894

TABLE 6-10A
(Continued)

Receptor:	Federal Ownership								Private Ownership			
	Off-Property Resident Farmer				Expanded Trespasser				On-Property Resident Farmer (RME)[a]			
			COC[b]				COC				COC	
Media	Receptor Risk	% Total Risk	Major Risk Contributors	% Risk of Total	Receptor Risk	% Total Risk	Major Risk Contributors	% Risk of Total	Receptor Risk	% Total Risk	Major Risk Contributors	% Risk of Total
Home Grown Produce (Groundwater Affected)	3.0E-06	27.69%	Sr-90	14.61%	NA		-		2.4E-05	28.76%	Sr-90	14.49%
											Ra-226	7.81%
											U-235/236	6.17%
ALL MEDIA	1.1E-05				4.9E-05				*8.1E-05*			

[a]RME = Reasonable Maximum Exposure

[b]COC = Contaminant of Concern

[c]Below risk threshold level - provided for comparison purposes

[d]No major risk contributors

[e]NA = not applicable to conceptual model

Comment No. 6-39, *42*

5884

TABLE 6-10B

ACTIVE FLYASH PILE
SUMMARY OF TOTAL NONCARCINOGENIC HAZARD
FOR SELECTED FUTURE LAND USE RECEPTORS
OPERABLE UNIT 2 REMEDIAL INVESTIGATION
FERNALD ENVIRONMENTAL MANAGEMENT PROJECT

Receptor:	Federal Ownership								Private Ownership			
	Off-Property Resident Farmer				Expanded Trespasser				On-Property Resident Farmer (RME)[a]			
			COC[b]				COC				COC	
Media	Receptor Hazard	% Total Hazard	Major Hazard Contributors	% Hazard of Total	Receptor Hazard	% Total Hazard	Major Hazard Contributors	% Hazard of Total	Receptor Hazard	% Total Hazard	Major Hazard Contributors	% Hazard of Total
Soil	ND[c]		-[d]		3.7E-02[e]	*53.20%*	-		ND		-	
Sediment	*ND*		-		*2.7E-08*	*39.20%*			*ND*			
Groundwater	9.9E-02[e]	50.73%	U-Total	55.30%	NA[f]		-		7.5E-01	75.70%	U-Total	75.70%
Home Grown Produce (Groundwater Affected)	9.2E-02[e]	47.54%	-		NA		-		2.1E-01	21.57%	U-Total	21.57%
Surface Water	*ND*				*4.9E-03*	*7.11%*			*ND*			
ALL MEDIA	1.9E-01				*6.9E-02*				9.9E-01			

[a]RME = Reasonable Maximum Exposure

[b]COC = Contaminant of Concern

[c]ND = Not determined because toxicity data are not available

[d]No major hazard contributors

[e]Below hazard threshold level - provided for comparison purposes

[f]NA = not applicable to conceptual model

Comment No. 6-39, *42*

FER\CRU2RI\CME\SECTION6\TAB6-10B.NEW\August29, 1994 9:15am

000101

TABLE 6-8A

CURRENT LAND USE
ACTIVE FLYASH PILE
SUMMARY OF TOTAL CARCINOGENIC RISK BY MEDIA

Media	Trespassing Youth	Off-Property Resident Farmer	Off-Property Resident Child	User of Milk and Meat	Groundskeeper	Great Miami River User Recrea.	Resid.	Agric.
Soil								
Total Rad Risk	1.8E-05	1.1E-07	1.9E-09	N/A[a]	6.9E-05	N/A	N/A	N/A
Total Chem Risk	2.6E-06	6.7E-08	5.7E-09	N/A	1.0E-05	N/A	N/A	N/A
Total Risk	2.1E-05	1.7E-07	7.6E-09	N/A	7.9E-05	N/A	N/A	N/A
Surface Water								
Total Rad Risk	1.9E-07	N/A	N/A	N/A	N/A	-[b]	-	N/A
Total Chem Risk	5.0E-07	N/A	N/A	N/A	N/A	1.4E-09	7.7E-09	N/A
Total Risk	6.9E-07	N/A	N/A	N/A	N/A	1.4E-09	7.7E-09	N/A
Sediment								
Total Rad Risk	2.8E-06	N/A	N/A	N/A	N/A	N/A	N/A	N/A
Total Chem Risk	1.2E-06	N/A	N/A	N/A	N/A	N/A	N/A	N/A
Total Risk	4.0E-06	N/A	N/A	N/A	N/A	N/A	N/A	N/A
Homegrown Produce (Dust Affected)								
Total Rad Risk	N/A	7.2E-12	5.1E-10	N/A	N/A	N/A	N/A	N/A
Total Chem Risk	N/A	1.3E-07	4.4E-08	N/A	N/A	N/A	N/A	N/A
Total Risk	N/A	1.3E-07	4.4E-08	N/A	N/A	N/A	N/A	N/A
Homegrown Produce (GMR Surface Water Affected)								
Total Rad Risk	N/A	N/A	N/A	N/A	N/A	N/A	N/A	-
Total Chem Risk	N/A	N/A	N/A	N/A	N/A	N/A	N/A	3.0E-09
Total Risk	N/A	N/A	N/A	N/A	N/A	N/A	N/A	3.0E-09
Beef/Milk (Dust Affected)								
Total Rad Risk	N/A	1.1E-09	1.9E-10	1.2E-08	N/A	N/A	N/A	N/A
Total Chem Risk	N/A	4.6E-08	1.2E-08	4.6E-07	N/A	N/A	N/A	N/A
Total Risk	N/A	4.7E-08	1.2E-08	4.7E-07	N/A	N/A	N/A	N/A

000102

5894

TABLE 6-8A
(Continued)

Media	Trespassing Youth	Off-Property Resident Farmer	Off-Property Resident Child	User of Milk and Meat	Groundskeeper	Great Miami River User Recrea.	Resid.	Agric.
Beef/Milk (GMR Surface Water Affected)								
Total Rad Risk	N/A	N/A	N/A	N/A	N/A	N/A	N/A	-
Total Chem Risk	N/A	N/A	N/A	N/A	N/A	N/A	N/A	5.5E-10
Total Risk	N/A	N/A	N/A	N/A	N/A	N/A	N/A	5.5E-10
Ambient Radon	***2.4E-07***	***N/A***	***N/A***	***N/A***	***N/A***	***N/A***	***N/A***	***N/A***

[a]N/A signifies that exposure of the receptor to the indicated medium is not applicable.

[b]No risk greater than the threshold level of 1×10^{-6}.

Comment No. 6-37, *42*

000103

5894

TABLE 6-14A

SOUTH FIELD
SUMMARY OF TOTAL CARCINOGENIC RISK FOR SELECTED FUTURE LAND USE RECEPTOR OPERABLE UNIT 2 REMEDIAL INVESTIGATION FERNALD ENVIRONMENTAL MANAGEMENT PROJECT

Receptor:	Federal Ownership								Private Ownership			
	Off-Property Resident Farmer				Expanded Trespasser				On-Property Resident Farmer (RME)[a]			
			COC[b]				COC				COC	
Media	Receptor Risk	% Total Risk	Major Risk Contributors	% Risk of Total	Receptor Risk	% Total Risk	Major Risk Contributors	% Risk of Total	Receptor Risk	% Total Risk	Major Risk Contributors	% Risk of Total
Soil	*1.9E-07*[c]	6.35%	-[d]		1.2E-04	87.34%	Th-232	10.91%	1.1E-02	33.89%	Th-232	4.25%
							Th-228	7.94%			Th-228	3.10%
							Ra-228	59.89%			Ra-226	23.18%
Sediment	NA[e]		-		1.5E-05	10.67%	Ra-226	9.51%	NA		-	
Groundwater	5.6E-05	52.46%	U-238	33.91%	NA		-		1.1E-03	3.26%	U-238	2.11%
			U-234	17.55%							U-234	1.09%
Home Grown Produce (Dust Affected)	8.5E-08	3.43%	Benzo(a) pyrene	1.42%	NA		-		1.5E-03	4.39%	Tc-99	1.09%
											Benzo(a) pyrene	1.70%
Home Grown Produce (Groundwater Affected)	1.7E-05	15.81%	U-238	10.22%	NA		-		3.3E-04	0.98%		
			U-234	5.29%								
Beef/Milk (Dust Affected)	3.7E-07	16.27%	Benzo(a) pyrene	5.73%	NA		-		1.9E-02	57.20%	Tc-99	23.28%
											Benzo(a) anthracene	16.06%
											Dibenzo(a,h) anthracene	11.90%

000104

58 94

5894

TABLE 6-14A
(Continued)

Receptor:	Federal Ownership								Private Ownership			
	Off-Property Resident Farmer				Expanded Trespasser				On-Property Resident Farmer (RME)[a]			
			COC[b]				COC				COC	
Media	Receptor Risk	% Total Risk	Major Risk Contributors	% Risk of Total	Receptor Risk	% Total Risk	Major Risk Contributors	% Risk of Total	Receptor Risk	% Total Risk	Major Risk Contributors	% Risk of Total
Beef/Milk (Groundwater Affected)	1.7E-06[c]	1.58%	Dibenzo(a,h) anthracene	6.32%	NA		-		3.2E-05	0.10%		
ALL MEDIA	8.7E-05				1.1E-04				3.4E-02			

[a]RME = Reasonable Maximum Exposure
[b]COC = Contaminant of Concern
[c]Below risk threshold level - provided for comparison purposes
[d]No major risk contributors
[e]NA = not applicable to conceptual model

Comment No. 6-44

000105

58 94

TABLE 6-14B

SOUTH FIELD
SUMMARY OF TOTAL NONCARCINOGENIC HAZARD FOR SELECTED FUTURE LAND USE RECEPTORS OPERABLE UNIT 2 REMEDIAL INVESTIGATION FERNALD ENVIRONMENTAL MANAGEMENT PROJECT

Receptor:	Federal Ownership								Private Ownership			
	Off-Property Resident Farmer				Expanded Trespasser				On-Property Resident Farmer (RME)[a]			
			COC[b]				COC				COC	
Media	Receptor Hazard	% Total Hazard	Major Hazard Contributors	% Hazard of Total	Receptor Hazard	% Total Hazard	Major Hazard Contributors	% Hazard of Total	Receptor Hazard	% Total Hazard	Major Hazard Contributors	% Hazard of Total
Soil	ND[c]	0.00%	-[d]		4.2E-03	5.27%			*7.8E-02*	1.23%	U-Total	0.80%
							Beryllium	3.43%			Arsenic	0.28%
							Arsenic	1.61%				
Sediment	NA[e]		-		4.9E-03	6.14%	Beryllium	4.00%	NA		-	
							Arsenic	1.17%				
Groundwater	8.6E-01	76.80%	U-Total	76.80%	NA		-		1.8E+01	75.70%	U-Total	75.66%
Surface Water	NA		-		7.1E-02	88.59%	U-Total	87.87%	NA		-	
Home Grown Produce (Groundwater Affected)	2.6E-01	11.40%	U-Total	23.13%	NA		-		5.1	21.54%	U-Total	21.53%
Beef/Milk (Groundwater Affected)	1.4E-04[f]	0.01%	-		NA		-		1.0E-02	0.04%	-	
ALL MEDIA	1.1E+00				8.0E-02				2.3E+01			

[a]RME = Reasonable Maximum Exposure
[b]COC = Contaminant of Concern
[c]ND = not determined because toxicity data are not available
[d]No major hazard contributors
[e]NA = not applicable to conceptual model
[f]Below hazard threshold level - provided for comparison purposes
Comment No. 6-20, *42*

FER\CRU2RI\CME\SECTION6\TAB6-14B.NEW\August29, 1994 9:17am

000106

5894

TABLE 6-15

INACTIVE FLYASH PILE
CONTAMINANTS OF CONCERN (COCs)

SOIL		SURFACE WATER
radium-226	thorium-232	No COCS
radium-228	arsenic	
thorium-228	dibenzo(a,h)anthracene	

SEDIMENT	GROUNDWATER	
No COCS	uranium-234	uranium-238
	uranium-235/236	uranium-total

PERCHED GROUNDWATER	AIR
no COCs	radon

DUST ON BEEF/MILK AND HOMEGROWN PRODUCE	GROUNDWATER ON BEEF/MILK AND HOMEGROWN PRODUCE	
dibenzo(a,h)anthracene	uranium-234	uranium-238
	uranium-235/236	uranium-total

GREAT MIAMI RIVER SURFACE WATER
no COCs

Comment No. 54

Tables 6-17A and 6-17B summarize risks and hazards by media, respectively, associated with the Inactive Flyash Pile for receptors assuming future land use. Major contributors by media to total risks and hazards, respectively, posed to the selected receptors are presented in Tables 6-18A and 6-18B. The greatest carcinogenic risk was the risk associated with groundwater use by the RME on-property farmer which slightly exceeded 1.0×10^{-3}. Total risk for this receptor was ~~3.2~~ 1.5 $\times 10^{-3}$ due mostly to the future estimated concentrations of uranium-234 (~~11.33~~ 25 percent) and uranium-238 (~~21.86~~ 48 percent) in groundwater and consequently in irrigated produce and beef and milk from livestock watered with contaminated groundwater. ~~Thorium-228 (19.45 percent) and beryllium (24.47 percent) in surface soil also contributed significant risk to this and other on-property receptors. As with the South Field, the greatest hazard to all receptors was due to the estimated presence of uranium-total in groundwater.~~

Exposures resulting in HIs greater than 1.0 were associated with ~~on- and off-property residents via~~ ingestion of groundwater and homegrown produce contaminated with uranium-total (~~74.28 and 17.55~~ approximately 82 and 15 percent, respectively).

~~Total estimated risk to future Great Miami River recreation users was in the 1.0×10^{-5} to 1.0×10^{-6} range. For the adult and youth receptors, thorium-228 and uranium-235/236 in sediment contributed~~

TABLE 6-16A

CURRENT LAND USE
INACTIVE FLYASH PILE
SUMMARY OF TOTAL CARCINOGENIC RISK BY MEDIA

Media	Trespassing Youth	Off-Property Resident Farmer	Off-Property Resident Child	User of Milk and Meat	Groundskeeper	Great Miami River User		
						Recreation	Residential	Agricultural
Soil								
Total Rad Risk	1.2E-05	5.3E-08	9.6E-10	N/A[a]	4.3E-05	N/A	N/A	N/A
Total Chem Risk	1.3E-06	1.2E-08	1.0E-09	N/A	5.6E-06	N/A	N/A	N/A
Total Risk	***1.3E-05***	6.5E-08	2.0E-09	N/A	4.9E-05	N/A	N/A	N/A
Sediment								
Total Rad Risk	1.4E-06	N/A	N/A	N/A	N/A	N/A	N/A	N/A
Total Chem Risk	7.7E-07	N/A	N/A	N/A	N/A	N/A	N/A	N/A
Total Risk	2.1E-06	N/A	N/A	N/A	N/A	N/A	N/A	N/A
Surface Water								
Total Rad Risk	1.7E-07	N/A	N/A	N/A	N/A	3.7E-11	1.9E-09	N/A
Total Chem Risk	1.6E-07	N/A	N/A	N/A	N/A	8.3E-09	***1.1E-09***	N/A
Total Risk	3.4E-07	N/A	N/A	N/A	N/A	8.4E-09	3.0E-09	N/A
Homegrown Produce (Dust Affected)								
Total Rad Risk	N/A	1.6E-09	1.1E-10	N/A	N/A	N/A	N/A	N/A
Total Chem Risk	N/A	2.9E-08	9.6E-09	N/A	N/A	N/A	N/A	N/A
Total Risk	N/A	3.1E-08	9.7E-09	N/A	N/A	N/A	N/A	N/A
Homegrown Produce (GMR Surface Water Affected)								
Total Rad Risk	N/A	N/A	N/A	N/A	N/A	N/A	N/A	2.5E-10
Total Chem Risk	N/A	N/A	N/A	N/A	N/A	N/A	N/A	3.3E-10
Total Risk	N/A	N/A	N/A	N/A	N/A	N/A	N/A	5.8E-10
Beef/Milk (Dust Affected)								
Total Rad Risk	N/A	3.5E-10	6.4E-11	3.5E-10	N/A	N/A	N/A	N/A
Total Chem Risk	N/A	1.1E-07	6.3E-08	1.1E-07	N/A	N/A	N/A	N/A
Total Risk	N/A	1.1E-07	6.3E-08	1.1E-07	N/A	N/A	N/A	N/A
Beef/Milk (GMR Surface Water Affected)								
Total Rad Risk	N/A	N/A	N/A	N/A	N/A	N/A	N/A	***4.3E-09***
Total Chem Risk	N/A	N/A	N/A	N/A	N/A	N/A	N/A	1.5E-10
Total Risk	N/A	N/A	N/A	N/A	N/A	N/A	N/A	4.4E-09

[a]N/A signifies that exposure of the receptor to the indicated medium is not applicable.

Comment #6-47, 42

FER\CRU2RI\TLC\SECTION6\TAB6-16A.NEW\September2, 1994 8:47am

TABLE 6-16B

CURRENT LAND USE
INACTIVE FLYASH PILE
SUMMARY OF TOTAL NONCARCINOGENIC HAZARD BY MEDIA

Media	Trespassing Youth	Off-Property Resident Farmer	Off-Property Resident Child	User of Milk and Meat	Groundskeeper	Great Miami River User		
						Rec.	Res.	Agric.
Soil								
Total Hazard	1.5E-02	N/A[a]	N/A	N/A	2.0E-02	N/A	N/A	N/A
Sediment								
Total Hazard	3.9E-02	N/A	N/A	N/A	N/A	N/A	N/A	N/A
Surface Water								
Total Hazard	7.7E-02	N/A	N/A	N/A	N/A	1.9E-06	4.2E-06	N/A
Homegrown Produce (Dust Affected)								
Total Hazard	N/A	4.1E-05	1.6E-04	N/A	N/A	N/A	N/A	N/A
Homegrown Produce (GMR Surface Water Affected)								
Total Hazard	N/A	N/A	N/A	N/A	N/A	N/A	N/A	2.4E-05
Beef/Milk (Dust Affected)								
Total Hazard	N/A	***1.4E-05***	3.9E-05	1.4E-05	N/A	N/A	N/A	N/A
Beef/Milk (GMR Surface Water Affected)								
Total Hazard	N/A	N/A	N/A	N/A	N/A	N/A	N/A	1.2E-05

[a]N/A signifies that exposure of the receptor to the indicated medium is not applicable.

Comment No. 6-47, *42*

000109

5894

TABLE 6-18A

INACTIVE FLYASH PILE
SUMMARY OF TOTAL CARCINOGENIC RISK
FOR SELECTED FUTURE LAND USE RECEPTORS
OPERABLE UNIT 2 REMEDIAL INVESTIGATION
FERNALD ENVIRONMENTAL MANAGEMENT PROJECT

MEI Receptor:	Federal Ownership								Private Ownership			
	Off-Property Resident Farmer				Expanded Trespasser				On-Property Resident Farmer (RME)[a]			
			COC[b]				COC				COC	
Media	Receptor Risk	% Total Risk	Major Risk Contributors	% Risk of Total	Receptor Risk	% Total Risk	Major Risk Contributors	% Risk of Total	Receptor Risk	% Total Risk	Major Risk Contributors	% Risk of Total
Soil	6.5E-08[c]	0.09%	-[d]		***2.7E-05***	91.35%	Th-228 Ra-226 Ra-228 Th-232 Arsenic	22.65% 17.88% 9.71% 29.85% 6.52%	1.0E-06	0.07%		
Sediment	NA[e]		-		2.2E-06	7.20%	Ra-226 Arsenic	2.84% 2.08%	NA		-	
Groundwater	5.6E-05	74.66%	U-238 U-234	24.98% 24.98%	NA		-		1.1E-03	74.75%	U-238 U-234	48.33% 25.06%
Surface Water	NA		-		3.4E-07[c]	1.12%	-		NA		-	
Home Grown Produce (Groundwater Affected)	1.7E-05	22.51%	U-238 U-234	14.54% 7.53%	NA		-		3.3E-04	22.53%	U-238 U-234	14.57% 7.55%
Beef/Milk (Groundwater Affected)	1.7E-06[c]	2.26%	U-238	1.42%	NA		-		3.2E-05	2.20%	U-238 U-234	1.42% 0.74%
ALL MEDIA	***7.5E-05***				3.0E-05				1.5E-03			

[a]RME = Reasonable Maximum Exposure
[b]COC = Contaminant of Concern
[c]Below risk threshold level- provided for comparison only
[d]No major risk contributors
[e]NA = not applicable to conceptual model

Comment No. 6-49, *42*

FER\CRU2RI\CME\SECTION6\TAB6-18A.NEW\August29, 1994 9:20am

TABLE 6-18B

INACTIVE FLYASH PILE
SUMMARY OF TOTAL NONCARCINOGENIC HAZARD
FOR SELECTED FUTURE LAND USE RECEPTORS
OPERABLE UNIT 2 REMEDIAL INVESTIGATION
FERNALD ENVIRONMENTAL MANAGEMENT PROJECT

Receptor:	Federal Ownership								Private Ownership			
	Off-Property Resident Farmer				Expanded Trespasser				On-Property Resident Farmer (RME)[a]			
			COC[b]				COC				COC	
Media	Receptor Hazard	% Total Hazard	Major Hazard Contributors	% Hazard of Total	Receptor Hazard	% Total Hazard	Major Hazard Contributors	% Hazard of Total	Receptor Hazard	% Total Hazard	Major Hazard Contributors	% Hazard of Total
Surface Soil	0.00[c]		-[d]		1.3E-02	12.37%	Beryllium	6.57%	ND[f]			
							Arsenic	5.83%				
Sediment	NA[e]		-		1.2E-02	11.85%	Arsenic	4.23%	NA		-	
							Beryllium	7.62%				
Groundwater	9.9E-01	*82.5%*	U-Total	*82.5%*	NA		-		18.0	*81.82%*	U-Total	*81.82%*
Surface Water	NA		-		7.7E-02	75.78%	U-Total	74.30%	NA		-	
Homegrown Produce (Groundwater Affected)	2.6E-01	*21.67%*	U-Total	*21.67%*	NA		-		3.3	*15.00%*	U-Total	*15.00%*
Beef/Milk (Groundwater Affected)	1.5E-02[c]	*1.25%*	-		NA		-		4.9E-01	*2.22%*	U-Total	*2.22%*
ALL MEDIA	*1.2E+00*				1.0E-01				*2.2E+01*			

[a]RME = Reasonable Maximum Exposure
[b]COC = Contaminant of Concern
[c]Below hazard threshold level - provided for comparison purposes
[d]No major hazard contributors
[e]NA = not applicable to conceptual model
[f]ND = not determined because toxicity data is not available

Comment Nos. 6-22, *42*

FER\CRU2RI\CME\SECTION6\TAB6-18b.NEW\August29, 1994 9:21am

894

TABLE 6-20B

CURRENT LAND USE
SOLID WASTE LANDFILL
SUMMARY OF TOTAL NONCARCINOGENIC HAZARD BY MEDIA

Media	Trespassing Youth	Off-Property Resident Farmer	Off-Property Resident Child	User of Milk and Meat	Groundskeeper	Great Miami River User		
						Rec.	Res.	Agric.
Soil								
Total Hazard	1.8E-03	N/D[a]	N/D	N/A[b]	***4.3E-03***	N/A	N/A	N/A
Sediment								
Total Hazard	2.6E-01	N/A	N/A	N/A	N/A	N/A	N/A	N/A
Surface Water								
Total Hazard	8.3E+00	N/A	N/A	N/A	N/A	1.1E-07	2.2E-06	N/A
Homegrown Produce (Dust Affected)								
Total Hazard	N/A	1.3E-06	4.8E-06	N/A	N/A	N/A	N/A	N/A
Homegrown Produce (GMR Surface Water Affected)								
Total Hazard	N/A	N/A	N/A	N/A	N/A	N/A	N/A	7.7E-05
Beef/Milk (Dust Affected)								
Total Hazard	N/A	5.8E-07	1.6E-06	5.8E-07	N/A	N/A	N/A	N/A
Beef/Milk (GMR Surface Water Affected)								
Total Hazard	N/A	N/A	N/A	N/A	N/A	N/A	N/A	3.0E-05

[a]N/D not determined because toxicity data are not available.

[b]N/A signifies that exposure of the receptor to the indicated medium is not applicable.

Comment No. 6-52, *42*

000112

TABLE 6-22A

SOLID WASTE LANDFILL
SUMMARY OF TOTAL CARCINOGENIC RISK
FOR SELECTED FUTURE LAND USE RECEPTORS
OPERABLE UNIT 2 REMEDIAL INVESTIGATION
FERNALD ENVIRONMENTAL MANAGEMENT PROJECT

MEI Receptor:	Federal Ownership								Private Ownership			
	Off-Property Resident Farmer				Expanded Trespasser				On-Property Resident Farmer (RME)[a]			
			COC[b]				COC				COC	
Media	Receptor Risk	% Total Risk	Major Risk Contributors	% Risk of Total	Receptor Risk	% Total Risk	Major Risk Contributors	% Risk of Total	Receptor Risk	% Total Risk	Major Risk Contributors	% Risk of Total
Soil	*3.3E-08*[c]	48.56%	-[d]		1.9E-05	92.65%	Th-228	20.43%	***1.8E-03***	***64.29%***	Th-228	***13.73%***
											Th-232	***19.33%***
											Ra-226	***12.76%***
							U-238	6.76%			Ra-228	***7.32%***
							Ra-226	18.96%			U-238	***6.03%***
							Ra-228	10.92%				
							Th-232	28.74%				
Sediment	NA[e]		-		1.4E-06	6.85%	Ra-226	2.99%	NA		-	
							U-238	1.03%				
Home Grown Produce (Dust Affected)	1.4E-09[c]	2.11%	-		NA		-		1.2E-04	4.34%	Arsenic	1.82%
											Benzo(a) pyrene	0.74%
Beef/Milk (Dust Affected)	2.5E-09[c]	3.69%	-		NA		-		8.7E-04	31.37%	Dibenzo(a) pyrene	10.85%
			Dibenzo(a,h) pyrene	1.98%							Benzo(a) pyrene	5.03%
ALL MEDIA	6.8E-08				2.0E-05				2.8E-03			

[a]RME = Reasonable Maximum Exposure
[b]COC = Contaminant of Concern
[c]Below risk threshold level - provided for comparison purposes
[d]No major risk contributors
[e]NA = not applicable to conceptual model

Comment No. 6-54

FER\CRU2RI\CME\SECTION6\TAB6-22A.NEW\August29, 1994 9:24am

000113

58 94

TABLE 6-22B

SOLID WASTE LANDFILL
SUMMARY OF TOTAL NONCARCINOGENIC HAZARD
FOR SELECTED FUTURE LAND USE RECEPTORS
OPERABLE UNIT 2 REMEDIAL INVESTIGATION
FERNALD ENVIRONMENTAL MANAGEMENT PROJECT

Receptor:	Federal Ownership								Private Ownership			
	Off-Property Resident Farmer				Expanded Trespasser				On-Property Resident Farmer (RME)[a]			
			COC[b]				COC				COC	
Media	Receptor Hazard	% Total Hazard	Major Hazard Contributors	% Hazard of Total	Receptor Hazard	% Total Hazard	Major Hazard Contributors	% Hazard of Total	Receptor Hazard	% Total Hazard	Major Hazard Contributors	% Hazard of Total
Soil	0.00[c]	0.00%	-[d]		3.2E-03	1.23%			6.8E-02	23.25%	Arsenic	19.38%
Sediment	NA[e]		-		2.6E-01	98.64%	U-Total	97.64%	NA		-	
Surface Water	NA		-		*1.1E-02*	0.14%			NA		-	
Home Grown Produce (Dust Affected)	1.3E-06	68.62%	Arsenic	68.34%	NA		-		9.6E-02	32.95%	Arsenic	32.90%
Beef/Milk (Dust Affected)	5.8E-07	31.38%	Arsenic	31.27%	NA		-		1.3E-01	43.8%	Arsenic	43.75%
ALL MEDIA	1.8E-06				*2.7E-01*				*2.9E-01*			

[a]RME = Reasonable Maximum Exposure

[b]COC = Contaminant of Concern

[c]Below hazard threshold level - provided for comparison purposes

[d]No major hazard contributors

[e]NA = not applicable to conceptual model

Comment No. 6-54, *42*

FER\CRU2RI\CME\SECTION6\TAB6-22B.NEW\August29, 1994 9:25am

Tables 6-25A and 6-25B summarize risks and hazards by media, respectively, associated with Lime Sludge Pond receptors assuming future land use. Tables 6-26A and 6-26B present the major contributors by media to total risks and hazards for the three selected receptors. The ~~T~~total risks to the on-property RME farmer ~~and resident child exceed~~ was ~~1.0×10^{-3}~~ 1.3×10^{-5} due primarily to direct contact with surface soil containing ~~radium-228 (10.65 and 7 percent), thorium-228 (36.45 and 24 percent),~~ thorium-230 (17 percent) and uranium-238 (~~6.56 and 4.26~~ 48 percent)~~, beryllium (28.51 and 34 percent), and Aroclor 1254 (8.3 and 11 percent)~~. Total risk to the expanded trespasser exceeded 1.0×10^{-5} due to ~~same compounds as on-property residents~~ radium-226 (22 percent), throium-228 (30 percent), and thorium-232 (21 percent). Total HIs for future receptors were less than 1.0 ~~exceeded 1.0 for the on-property child due to the presence of uranium total (68.41 percent) in soil~~. Total risk to the off-property farmer and child under both private and federal ownership did not exceed the 1.0×10^{-6} threshold risk and hazard was well below 1.0.

6.3.6 Operable Unit 2 Cumulative Risk

No. 6-60 Tables 6-27A and 6-27B summarize the risks and hazards by media to future receptors due to the cumulative impact of contaminants present within Operable Unit 2. The three most conservative future receptors were considered for the Operable Unit 2-wide risk assessment: 1) expanded trespasser, 2) off-property farmer, and 3) on-property RME farmer. These receptors were evaluated for the same pathways evaluated for under subunit risk (e.g., inhalation, ingestion, dermal contact, etc.). It is emphasized that the risks and hazards presented are those resulting primarily from the three subunits contributing most to groundwater contamination: the Active Flyash Pile, South Field and Inactive Flyash Pile.

The greatest carcinogenic risk posed was to the RME on-property farmer which had a total risk of ~~3.7×10^{-3}~~ 3.3×10^{-2}. Major contributors to risks and hazards for the off-property farmer, expanded trespasser, and on-property farmer (RME) are presented in Tables 6-28A and 6-28B. The major contributor to risk for the on-property receptor is from the presence of ~~thorium-228 (28 percent),~~
No. 45 ~~radium-228 (12.6 percent), and beryllium (8.84 percent)~~ radium-226 (23 percent) in soil ***by direct radiation***, and the estimated presence of ~~uranium-238~~ technetium-99 (23 percent), benzo(a)pyrene (16 percent), and dibenzo(a,h)anthracene (12 percent) in ~~groundwater (19 percent)~~ dust affected beef and milk products ***ingested***.

000115

Total risk to the off-property farmer slightly exceeded 1.~~0~~ 1 x 10^{-4} due primarily to uranium-234 (~~12~~ 18percent) and uranium-238 (~~23.21~~ 34 percent) in ***drinking water through*** groundwater, ~~and thorium-228~~ radium-226 (~~8.63~~ 8

TABLE 6-25A

LIME SLUDGE PONDS
FUTURE LAND USE
SUMMARY OF TOTAL CARCINOGENIC RISK BY MEDIA

Media	Expanded Trespasser	Off-Property Resident Farmer[c]	Off-Property Resident Child[c]	On-Property Resident Farmer (RME)	On-Property Resident Child	Perched Groundwater User (Adult)
Soil						
Total Rad Risk	2.2E-05	1.2E-07	2.2E-09	1.0E-05	1.9E-07	1.0E-05
Total Chem Risk	1.7E-06	1.5E-09	1.3E-10	1.3E-07	1.1E-08	1.3E-07
Total Risk	***2.4E-05***	1.3E-07	2.4E-09	1.1E-05	2.0E-07	1.1E-05
Groundwater						
Total Rad Risk	N/A[a]	1.1E-08	4.6E-10	1.9E-07	8.1E-09	N/A
Total Chem Risk	N/A	-[b]	-	-	-	N/A
Total Risk	N/A	1.1E-08	4.6E-10	1.9E-07	8.1E-09	N/A
Perched Groundwater						
Total Rad Risk	N/A	N/A	N/A	N/A	N/A	6.3E-05
Total Chem Risk	N/A	N/A	N/A	N/A	N/A	7.0E-07
Total Risk	N/A	N/A	N/A	N/A	N/A	6.4E-05
Homegrown Produce (Dust Affected)						
Total Rad Risk	N/A	1.4E-09	1.0E-10	1.3E-07	9.0E-09	1.3E-07
Total Chem Risk	N/A	5.4E-09	1.8E-09	4.6E-07	1.5E-07	4.6E-07
Total Risk	N/A	6.8E-09	1.9E-09	5.9E-07	1.6E-07	5.9E-07
Homegrown Produce (Groundwater Affected)						
Total Rad Risk	N/A	3.5E-09	2.5E-10	6.1E-08	4.3E-09	6.1E-08
Total Chem Risk	N/A	-	-	-	-	-
Total Risk	N/A	3.5E-09	2.5E-10	6.1E-08	4.3E-09	6.1E-08
Beef/Milk (Dust Affected)						
Total Rad Risk	N/A	2.1E-10	3.5E-11	3.1E-08	5.4E-09	3.1E-08
Total Chem Risk	N/A	1.7E-08	9.6E-09	1.4E-06	7.5E-07	1.4E-06
Total Risk	N/A	1.7E-08	9.6E-09	1.4E-06	7.5E-07	1.4E-06

FER\CRU2RI\TLC\SECTION6\TAB6-25A.NEW\August29, 1994 9:27am

000117

5894

TABLE 6-25A
(Continued)

Media	Expanded Trespasser	Off-Property Resident Farmer[c]	Off-Property Resident Child[c]	On-Property Resident Farmer (RME)	On-Property Resident Child	Perched Groundwater User (Adult)
Beef/Milk (Groundwater Affected)						
Total Rad Risk	N/A	8.3E-09	1.4E-09	1.4E-07	2.4E-08	1.4E-07
Total Chem Risk	N/A	-	-	-	-	N/A
Total Risk	N/A	8.3E-09	1.4E-09	1.4E-07	2.4E-08	1.4E-07

[a]N/A signifies that exposure of the receptor to the indicated medium is not applicable.

[b]No risk greater than the threshold level of $1x10^{-6}$.

[c]Off-property resident private and federal scenarios pose the same risk.

Comment No. 6-58, *42*

5894

5894

TABLE 6-25B

LIME SLUDGE PONDS
FUTURE LAND USE
SUMMARY OF TOTAL NONCARCINOGENIC HAZARD BY MEDIA

Media	Expanded Trespasser	Off-Property Resident Farmer	Off-Property Resident Child	On-Property Resident Farmer (RME)	On-Property Resident Child	Perched Groundwater User (Adult)
Soil						
Total Hazard	2.2E-01	N/D[a]	N/D	N/D	N/D	N/D
Perched Groundwater						
Total Hazard	N/A[b]	N/A	N/A	N/A	N/A	1.3E-03
Homegrown Produce (Dust Affected)						
Total Hazard	N/A	1.5E-05	5.9E-05	1.3E-03	5.0E-03	***1.3E-03***
Beef/Milk (Dust Affected)						
Total Hazard	N/A	5.0E-06	3.4E-05	4.3E-04	2.9E-03	4.3E-04

[a]N/D not determined because toxicity data not available.

[b]N/A signifies that exposure of the receptor to the indicated medium is not applicable.

Comment No. 6-58, *42*

000119

TABLE 6-28A

OPERABLE UNIT 2 WIDE SUMMARY OF TOTAL CARCINOGENIC RISK FOR SELECTED FUTURE LAND USE RECEPTORS OPERABLE UNIT 2 REMEDIAL INVESTIGATION FERNALD ENVIRONMENTAL MANAGEMENT PROJECT

Receptor:	Federal Ownership								Private Ownership			
	Off-Property Resident Farmer				Expanded Trespasser				On-Property Resident Farmer (RME)[a]			
			COC[b]				COC				COC	
Media	Receptor Risk	% Total Risk	Major Risk Contributors	% Risk of Total	Receptor Risk	% Total Risk	Major Risk Contributors	% Risk of Total	Receptor Risk	% Total Risk	Major Risk Contributors	% Risk of Total
Soil	1.3E-05	*11.82%*	Ra-226	3.12%	7.6E-05	*87.36%*	Th-228	10.72%	1.1E-02	*33.33%*	Th-228	1.35%
			U-238	0.35%			Th-232	13.58%			Ra-226	10.13%
							Ra-226	53.58%			Ra-228	0.61%
											Th-232	1.86%
Groundwater	6.0E-05	*54.55%*	U-238	13.43%	NA[c]		-[d]		*1.3E-03*	*3.94%*	U-238	0.92%
			U-234	6.96%							U-234	0.48%
Surface Water	NA		-		*6.2E-7*	*0.71%*	Th-228	2.60%	NA		-	
Homegrown Produce (Dust Affected)	1.5E-05	*13.64%*	Ra-226	4.56%	NA		-		1.5E-03	*4.55%*	Benzo(a)pyrene	0.74%
											Tc-99	0.46%
Home Grown Produce (Groundwater Affected)	6.9E-06	*6.27%*	U-235/236	2.10%	NA		-		1.2E-04	*0.36%*	U-235/236	0.14%
Beef/Milk (Dust Affected)	1.4E-05	*12.73%*	Benzo(a)pyrene	1.39%	NA		-		1.9E-02	*57.58%*	Indeno(1,2,3-cd)pyrene	1.01%
			Dibenzo(a,h) anthracene	1.54%							Benzo(a)pyrene	7.02%
											Dibenzo(a,h) anthracene	5.20%

000120

5894

TABLE 6-28A
(Continued)

Receptor:	Federal Ownership								Private Ownership			
	Off-Property Resident Farmer				Expanded Trespasser				On-Property Resident Farmer (RME)[a]			
			COC[b]				COC				COC	
Media	Receptor Risk	% Total Risk	Major Risk Contributors	% Risk of Total	Receptor Risk	% Total Risk	Major Risk Contributors	% Risk of Total	Receptor Risk	% Total Risk	Major Risk Contributors	% Risk of Total
Beef/Milk (Groundwater Affected)	6.8E-07	*0.62%*	-		NA		-		1.5E-07	*0.00%*	U-235/236	*0.00%*
ALL MEDIA	*1.1E-04*				*8.7E-05*				*3.3E-02*			

[a]RME = Reasonable Maximum Exposure
[b]COC = Contaminant of Concern
[c]NA = not applicable to conceptual model
[d]No major hazard contributors

Comment No. 6-62

percent) ~~in soil~~ ***through inhalation and***~~, thorium-230~~ ~~radium-226~~ (~~10~~ 12 percent)~~, and uranium-238 (12.2 percent) in soil~~ ***through ingestion of*** ~~in~~ dust affected produce.

Total HIs exceed 1.0 for both the on- and off-property farmers due primarily to the estimated presence of total uranium in ***ingestion of*** groundwater and groundwater affected produce (~~85.86 and 86.10~~ 99 and 96 percent, respectively).

Total risk to the expanded trespasser was ~~6.6~~ 8.7 x 10^{-5} due primarily to ***direct radiation from*** ~~beryllium and~~ radium-226, thorium-228, and thorium-232 in soil which contributed ~~64.5~~ 52 percent, 10 percent, and ~~15.5~~ 13 percent, respectively. Total HI for this receptor was below 1.0.

6.3.7 Background Risks

No. 6-63 All subunit-specific risks in the risk assessment are calculated without accounting for the potential contribution from natural background concentrations of CPCs. In many cases, the concentrations of CPCs in soil at Operable Unit 2 waste areas are only slightly above natural background concentrations; however, the risks and HIs for these site-related concentrations are often greater than 1 x 10^{-6} and 1.0, respectively. Background contributions provide a useful point of comparison for subunit-specific risk estimates.

Therefore, risks and HIs are calculated for the RME on-property future farmer using background concentrations of CPCs in soil and groundwater as direct contact exposure point concentrations where appropriate. Naturally occurring background soil concentrations were also used as the source term for subunit-specific air and groundwater modeling. Exposure assumptions and models used for these background calculations are the same as those used for evaluating subunit-specific risks to the RME on-property resident farmer.

Tables 6-29A through 6-29E present a summary of comparison of subunit-specific risks to the future on-property RME farmer with the risk that would exist to that receptor if naturally occurring CPCs were present at naturally occurring background concentrations. Details of the major contributions to risks are presented in Section B.4.0 of Appendix B. These background comparison tables presented in this section indicate that:

TABLE 6-28B

OPERABLE UNIT 2 WIDE
SUMMARY OF TOTAL NONCARCINOGENIC HAZARD
FOR SELECTED FUTURE LAND USE RECEPTORS
OPERABLE UNIT 2 REMEDIAL INVESTIGATION
FERNALD ENVIRONMENTAL MANAGEMENT PROJECT

Receptor:	Federal Ownership								Private Ownership			
	Off-Property Resident Farmer				Expanded Trespasser				On-Property Resident Farmer (RME)[a]			
			COC[b]				COC				COC	
Media	Receptor Hazard	% Total Hazard	Major Hazard Contributors	% Hazard of Total	Receptor Hazard	% Total Hazard	Major Hazard Contributors	% Hazard of Total	Receptor Hazard	% Total Hazard	Major Hazard Contributors	% Hazard of Total
Soil	N/D[f]				9.0E-03[c]	*7.5%*	-[d]		-		-	
Groundwater	9.1E-01	24.91%	U-Total	24.91%	NA[e]		-		1.7E+01	*73.91%*	U-Total	75.19%
1Sediment	N/A				*5.3E-02*	*44.17%*	*U-Total*					
Surface Water	N/A				*5.5E-02*	*45.83%*			NA		-	
Home Grown Produce (Groundwater Affected)	2.7E+00	75.06%	U-Total	75.06%	NA		-		5.0E+00	*21.74%*	U-Total	21.43%
Beef/Milk (Groundwater Affected)	-		-		NA		-		-		-	
ALL MEDIA	3.7E+00				1.2E-01				2.3E+01			

[a]RME = Reasonable Maximum Exposure
[b]COC = Contaminant of Concern
[c]Below hazard threshold level - provided for comparison purposes
[d]No major hazard contributors
[e]NA = not applicable to conceptual model
[f]ND = not determined because toxicity data not available

Comment No. 6-62, *42*

FER\CRU2RI\CME\SECTION6\TAB6-28B\August29, 1994 9:33am

TABLE 6-29A

COMPARISON SUMMARY OF BACKGROUND RISKS TO ON-SITE RISKS ACTIVE FLYASH PILE: CARCINOGENS

Media	On-Property Resident Farmer (RME)	Background
Soil		
Total Radiological Risk	1.1E-06	3.0E-07
Total Chemical Risk	6.7E-07	4.5E-08
Total Risk	1.7E-06	3.4E-07
Groundwater		
Total Radiological Risk	4.7E-05	8.2E-06
Total Chemical Risk	9.3E-15	-
Total Risk	4.7E-05	8.2E-06
Homegrown Produce (Dust Affected)		
Total Radiological Risk	7.3E-08	1.6E-08
Total Chemical Risk	1.3E-06	9.4E-08
Total Risk	1.4E-06	1.1E-07
Homegrown Produce (Groundwater Affected)		
Total Radiological Risk	2.4E-05	2.5E-06
Total Chemical Risk	3.5E-15	***9.4E-08***
Total Risk	2.4E-05	2.5E-06
Beef/Milk (Dust Affected)		
Total Radiological Risk	1.2E-08	3.0E-09
Total Chemical Risk	4.6E-07	2.9E-08
Total Risk	4.7E-07	3.2E-08
Beef/Milk (Groundwater Affected)		
Total Radiological Risk	7.2E-06	***2.8E-07***
Total Chemical Risk	***6.3E-16***	-
Total Risk	***7.2E-06***	2.8E-07
All Media	8.2E-05	1.1E-05

Comment No. 6-64, *42*

TABLE 6-29B

COMPARISON SUMMARY OF BACKGROUND RISKS TO ON-SITE RISKS SOUTH FIELD: CARCINOGENS

Media	On-Property Resident Farmer (RME)	Background
Soil		
Total Radiological Risk	1.1E-02	1.1E-03
Total Chemical Risk	5.4E-04	4.1E-05
Total Risk	1.1E-02	1.2E-03
Groundwater		
Total Radiological Risk	1.1E-03	4.0E-07
Total Chemical Risk	-	-
Total Risk	1.1E-03	4.0E-07
Homegrown Produce (Dust Affected)		
Total Radiological Risk	4.3E-04	2.8E-06
Total Chemical Risk	***1.0E-03***	4.7E-05
Total Risk	1.5E-03	4.9E-05
Homegrown Produce (Groundwater Affected)		
Total Radiological Risk	3.3E-04	1.2E-07
Total Chemical Risk	-	-
Total Risk	3.3E-04	1.2E-07
Beef/Milk (Dust Affected)		
Total Radiological Risk	8.0E-03	1.0E-05
Total Chemical Risk	1.1E-02	6.1E-05
Total Risk	1.9E-02	7.1E-05
Beef/Milk (Groundwater Affected)		
Total Radiological Risk	3.2E-05	1.3E-08
Total Chemical Risk	-	0.0E+00
Total Risk	3.2E-05	1.3E-08
All Media	3.4E-02	1.3E-03

Comment No. 6-64, *42*

6.4.2 Selection of Constituents of Potential Concern

Uncertainty associated with the selection process used to determine the CPCs in Operable Unit 2 can be attributed to the following major sources:

- Evaluation of the existing data raises the question as to whether all pockets of elevated contamination have been identified. This is particularly important because risks from radionuclides dominate the overall risks to all receptors evaluated in this risk assessment. No conclusion can be drawn for chemical constituents detected on the property. ***The impact of this uncertainty to total risk for a receptor may underestimate the risk by as much as one order of magnitude.***

No. 46

- Sample analytical techniques produce results that have an unknown degree of uncertainty associated with them. These uncertainties are documented by using data qualifiers to reflect the assumed degree of certainty of measurement. These analytical uncertainties affect the selection of CPCs or the calculation of exposure point concentrations (either measured or modeled) that may be based on a particular analytical result. ***Data qualifiers were interpreted in a way that produced more false positives than negatives, causing a conservative impact and possible increasing risks up to one order of magnitude.***

No. 46

- Concentrations of inorganics and radionuclides are compared to background concentrations to determine if their presence is do to naturally occurring concentrations from native soils or are due to site activities. However, sampling procedures for groundwater and air used to determine background concentrations have high detection limits. A chemical that was not detected during background sampling could result in the erroneous inclusion of a chemical from those selected for further evaluation. ***The impact of this uncertainty is conservative by including CPCs that could be at background, causing a possible increase in risk by one order of magnitude.***

No. 46

- The selection of CPCs includes minimally detected compounds or compounds with a small data set. The screening process for handling minimally detected compounds is to include the compound as a CPC if it was detected once or more in more than one media. In this instance the one or two hits are assumed to be hot-spot indications and not outliers, and are conservatively included as CPCs if the highest hit passes the other screening criteria. ***The impact of this uncertainty on risks to receptors could overestimate the risk by greater than one order of magnitude.***

No. 46

6.4.3 Uncertainty in Exposure Assessment

Sources of uncertainty for the exposure assessment arise from calculation of exposure point concentrations, selection of receptors, determination of land use scenarios and selection of exposure factors. Uncertainty associated with calculation of exposure point concentrations in Operable Unit 2 can be attributed to the following sources:

000126

No. 46

- According to the "Risk Assessment Guidance for Superfund" (EPA 1989a), the UCLs are used for all exposure concentrations. This means that 95 percent of the time, the actual mean concentration can be less than the value used in the exposure assessment. Conversely, 5 percent of the time the actual mean concentration can be greater than the value used in the exposure assessment. ***This assumption will overestimate the risk by maximally exposing the receptor. The impact varies depending on concentration distribution, but could be up to one order of magnitude.***

- Sample analytical techniques produce results that have a degree of uncertainty associated with them. These uncertainties are documented by using data qualifiers to reflect the degree of uncertainty of measurement. These analytical uncertainties affect the exposure

No. 46 point concentrations (either measured or modeled) that may be based on a particular analytical result. ***Data qualifiers were interpreted in a way that produced more false positives than false negatives, causing an overestimation of risk by up to one order of magnitude.***

- There is also large uncertainty when exposure concentrations were based on the maximum detected concentration. The conservative approach was taken in the statistical interpretation for the selection of minimally detected compounds and their concentration term. The screening methodology for handling minimally detected compounds was to include the compound in the risk assessment if it was detected more than once in more than one media. In this instance it is difficult to determine statistical properties of a data set when most of the samples are non-detects, or when there are only a few data points. The screening methodology is to set the concentration term, which is used as the source term in the risk assessment, to the highest detection when a 95 UCL cannot be calculated. ***This undertainty could overestimate risks by more than one order of magnitude.*** No. 46

Predicted concentrations were used as exposure point concentrations when measured data were not available (e.g., the future). These predictions were made using mathematical representations (models) of the natural systems found or suspected to exist in the study area. Due to the complexity of natural environments, conservative assumptions were often used in these models to calculate exposure point concentrations. Uncertainties associated with modeled exposure point concentrations in Operable Unit 2 can be attributed to the following sources:

- Use of Toxicity Characteristic Leaching Procedure (TCLP) data to characterize leachate concentrations in the natural environment adds conservatism to the groundwater fate and transport modeling process because TCLP leaching is performed with an acidic solution. This tends to overestimate the leachate concentration of inorganics over natural (more neutral) leaching conditions. ***This impact is less than one order of magnitude overestimation.*** No. 46

- The selection of parameters related to the attenuation and retardation of constituents is a major uncertainty in the analysis. The attenuation and retardation factors of every constituent except uranium were determined after an extensive literature search. The use of site-specific values are assumed to result in lower uncertainty than using literature values. ***The impact on risk could overestimate or underestimate risks up to one order of magnitude.*** No. 46

- The organic decay rates at the FEMP were determined after an extensive literature search. The actual decay rates may or may not follow the assumed literature values because of site-specific conditions. The use of site data to determine organic decay rates is assumed to result in lower uncertainty than that resulting from the use of literature values. ***The variation could impact risk, potentially causing their overestimation or underestimation by up to one order of magnitude.*** No. 46

- Transport through the vadose zone is approximated by using a one-dimensional model and

6

assuming ~~the zone~~ *that each of the two zones* is homogeneous. The unsaturated seepage flow rate is a function of several parameters, such as porosity, residual saturation, and pore size distribution index. Due to the heterogeneous nature of the till, these parameters change from location tolocation and from depth to depth. ***This uncertainty could cause the overestimation or underestimation of risks by up to one order of magnitude.***

- The total mass of each contaminant is calculated by multiplying the UCL by the volume of the entire waste area, except for U-238 which was kriged, thus assuming the UCL concentration is uniformly distributed through the entire source. ***This uncertainty could overestimate or underestimate risks by one to two orders of magnitude because the UCL is often much greater than the mean concentration.***

No. 46

- The fate and transport modeling uses a "70-year rule" for these constituents where no or inadequate leachate data exist. This "rule" assumes all the chemical leaches from a particular waste unit in 70 years. This method is considered very conservative for compounds that are insoluble but may underestimate the maximum exposure for soluble compounds. ***Although it may underestimate maximum exposure concentration for soluble compounds, it also overestimates exposure time. This uncertainty could overestimate the risk due to certain constituents by more than one order of magnitude.***

No. 46

- Air modeling is based on a number of conservative assumptions. In combination these assumptions appear to overestimate the exposure point concentrations for air based on site air monitoring data and according to a literature search for typical ambient air PM_{10} measurements for EPA Region V. The long-term average PM_{10} concentrations calculated are comparable to measured dust concentrations on constructions. This uncertainty is expected to moderately overestimate risk (i.e., overestimate risks by 1 to 2 orders-of-magnitude.

- The future configuration of the OU2 subunits is uncertain at this time; thus, a reasonable worst-case configuration is used to determine source concentrations for both air and surface water modeling. If the actual configuration differs from that used in this evaluation, the future source concentrations may change and the models will have incorrectly estimated the exposure point concentrations. ***This uncertainty could cause an overestimation or underestimation of risks by up to one order of magnitude.***

No. 46

- The transport models individually made assumptions regarding the fate of individual constituents within source media. However, these models were not combined or linked to consider assumptions made regarding depletion of chemicals from one model and the effect of that assumption on another model (i.e., the leaching models did not consider source depletion from volatilization or fugitive emissions and the air emissions models did not consider losses via leaching). Furthermore, the direct exposure pathways to a particular source (i.e., incidental ingestion of surface soil) did not consider source depletion by leaching, surface water transport, or air emissions. Consequently, this assumption is considered very conservative, ***causing an overestimation of one to two orders of magnitude for the pathways impacted.***

No. 46

These uncertainties for modeling collectively are assumed to moderately overestimate the concentrations expected in groundwater and for aerial deposition (i.e., overestimate concentration and risk by a factor of one to two orders of magnitude) based on the above discussion. Models were also used to calculate chemical concentrations in plants and animals. Each time concentrations at one level in the food chain are extrapolated from a lower level, uncertainty is introduced into the result. For example, soil-to-plant transfer factors (B_v values) generally represent the maximum amount of contaminant transfer that may occur. In reality, the contaminant transfer is quite dependent on the form of the constituent (e.g., metal species) and other site-related physical conditions (e.g., soil type). Thus actual site transfer factors are unknown. The values chosen are intended to be conservative and they are likely to overestimate risk.

6.4.4 Uncertainty as a Result of Land Use, Receptors, and Exposure Factors

A major uncertainty associated with predicting future exposures at the FEMP is the future disposition of the property itself. Because it is not possible to accurately predict what the future uses of the land may be the most conservative (rather than the most likely) land use is evaluated, as stipulated by the National Oil and Hazardous Substances Pollution Contingency Plan (NCP). The receptors selected for evaluation in this assessment have been generally selected to reflect and encompass those types of activities which may produce the reasonable maximum exposure individual. Uncertainty associated with the selection of receptors in the current land use scenario is assumed to be low (over- or underestimate risks by a one order of magnitude or less) because the current site environmental setting and configuration was the basis for selection of these receptors. Uncertainty associated with receptors identified in the future land use scenario is high (i.e., potential to overestimate risk by two or more orders-of-magnitude) due to the low probability of the site being used as a residence or for agricultural purposes.

Each exposure factor selected for use in this risk assessment has some uncertainty associated with it. Generally these factors are based on surveys of physiological and lifestyle profiles across the United States. The attributes and activities studied in these surveys generally have a broad distribution. To avoid the underestimation of exposure, this risk assessment followed EPA's recommendation and used the 95th percentile for most of the exposure parameters used in this risk assessment. In other words, the values selected represent the observed or expected habits of a small percentage of the population (usually the upper 5 or 10 percent). For example, the resident farmer scenarios were assumed to inhale air at the location of the highest annual average concentration for 350 days per year for 70 years. Seventy years represents the maximum exposure duration and is not based on a statistical assessment of local or regional residence time for farm families. This factor tends to overestimate risk.

Few intake parameters have high uncertainty associated with them. In the risk assessment for Operable Unit 2, the particular exposure parameters with the greatest uncertainty are judged to be those associated with time (combination of frequency and duration on the site). The particular exposure pathway with the combination of exposure parameters with the highest uncertainty is dermal contact, which is assumed to result in moderate uncertainty (over- or underestimate actual exposure by one to two orders of magnitude) for exposure.

REFERENCES

Algermissen, S.T. 1969, "Seismic Risk Studies in the U.S., "U.S. Dept. of Commerce, Environmental Sciences Services Administration, Coast and Geodetic Survey, Washington,DC.

Andrade, A., et. al., 1989, "Leaching Characteristics of Fly Ash After Four Years of Natural Weathering", Fly Ash and Coal Conversion By-Products: Characterization, Utilization and Disposal VI. Day, R and Glasser, F., eds. Material Research Society Symposium Proceedings, Vol. 178, Boston, MA.

Asmare, A. and J. Laguros, 1989, "Environmental Assessment of Bottom Ash and Fly Ash Used in Road Stabilization", in Fly Ash and Coal Conversion By-Products: Characterization, Utilization and Disposal VI. Day, R and Glasser, F., eds. Material Research Society Symposium Proceedings, Vol. 178, Boston, MA.

ATEC Associates, Inc., 1982, "Topographic Survey and Geotechnical Investigation, FMPC Water Pollution Control," n.p.

Bahor, M.P., R.J. McLaren, J.E. Niece, and H.C. Paderson, 1981, Coal Ash Disposal Manual, Second Edition. EPRI Research Project No. 1685-3. GAI Consultants, Inc.

Bailey, R., 1978, "Ecoregions of the United States," U.S. Forest Service, Ogden, UT.

Ball, D., U.S. Army Corps of Engineers, Oct., 1991, Personal Communication.

Battelle Laboratories, Inc., 1981, "Environmental Report of the Feed Materials Production center," Final Report to NLO, Battelle Laboratories, Columbus, OH.

Battelle Laboratories, Inc., National Lead Co. of Ohio, and the U.S. Dept. of Energy, 1977, "Environmental Impact Assessment - Feed Materials Production Center, Fernald, Ohio," DOE, Oak Ridge Operations Office, Oak Ridge, TN.

Batu, V., 1989, "A Generalized Two-Dimensional Analytical Solution for Hydrodynamic Dispersion in Bounded Media with the First-Type Boundary Condition at the Source," Water Resources Research, Vol. 25, No.6, pp. 1125-1132.

Boback, M.W., D. A. Fleming, T. A. Dugan, R. W. Keys and R. B. Grant, 1985, "History of FMPC Radionuclide Discharges, "NLCO-2039, National Lead Co. of Ohio, Cincinnati, OH, prepared for U.S. Dept. of Energy, Oak Ridge Operations Office, Oak Ridge, TN.

Boback, M. W., D. A. Fleming, T. A. Dugan, R. W. Keys and R. B. Grant, 1986, "History of FMPC Radiological Discharges," FMPC-2058, revision to NLCO-2039, Westinghouse Materials Co. of Ohio, Cincinnati, OH., prepared for U.S. Dept. of Energy, Oak Ridge Operations Office, Oak Ridge, TN.

Bogar, L.C., Westinghouse Materials Company of Ohio, Jan. 1987, [Letter to J. A. Reafsnyder, DOE, Subject: Report and recommendation concerning the off-site disposal of FMPC boiler plant fly ash].

Bohn, R., T.S. Cuscino, and C. Cowherd, Jr., 1978, "Fugitive Emissions from Integrated Iron and Steel Plants," EPA-600/2-78-050, U.S. Environmental Protection Agency, Midwest Research Institute, Kansas City, MO.

Bowers, T.S., K.L. Von Damm and J.M. Edmond, 1985, "Chemical Evaluation of Mid-Ocean Ridge Hot Springs," Geochemical et Cosmochimica Acta, Vol. 49, pp. 2239-2252.

Brockman, C.S., 1986, "Glacial Geologic Mapping in Hamilton County, Ohio, "Ohio Dept. of Natural Resources, Division of Geological Survey, Columbus, OH.

Brockman, S.C., 1988, "Glacial Geologic Mapping in Hamilton County, Ohio: report of Progress on the Final Phase," Ohio Department of Natural Resources, Division of Geological Survey, 15pp.

Clark, T.R., L. Elikan, C.A. Hill and B.L. Speicher, 1989, "History of FMPC Radionuclide Discharges - Revised Estimates of Uranium and Thorium Air Emissions from 1951-1987," Addendum to FMPC-2082, Westinghouse Materials Co. of Ohio, Cincinnati, OH, prepared for U.S. Dept. of Energy, Oak Ridge Operations Office, Oak Ridge, TN.

No. 48 ***Clement International, 1990, "Development of Relative Potency Estimates for PAHs and Hydrocarbon Combustion Product Fractions Compared to Benzo[a]Pyrene and Their Use in Carcinogen Risk Assessments," prepared for the U.S. EPA, Washington, DC.***

NO. 3-13

"Coal Combustion By-Products Ceramic Filler for Protective Coating Systems", Proceedings of the American Power Conference, March 1991.

Cooper, P. Leonard and W. Fisher Cassie, 1976, The Mechanics of Engineering Soils.

Cowherd, C. Jr., M. Muleski, P. Englehart and D. Gillette, 1985, "Rapid Assessment of Exposure to Particulate Emissions from Surface Contamination Sites," EPA/600/8-85/002, U.S. Environmental Protection Agency, Midwest Research Institute, Kansas City, MO.

Cross, W.P. and R.E. Hedges, 1959, "Flow Duration of Ohio Streams," Bulletin 31, Ohio Dept. of Natural Resources, Division of Water, Columbus, OH.

Dames & Moore, 1985a, "Department of Energy Feed Materials Production Center, Groundwater Study - Task C Report," Dames & Moore, White Plains, NY, prepared for National Lead of Ohio, Inc., Cincinnati, OH.

Dames & Moore, 1985b, "Department of Energy Feed Materials Production Center, Groundwater Study - Task A Report," Dames & Moore, White Plains, NY, prepared for National Lead of Ohio, Inc., Cincinnati, OH.

Diehl, R.C., Haffman, E.A., Schultz, H., Haren, R.J., 1972, "Fate of Trace Mercury in the Combustion of Coal", Bureau of Mines Managing Coal Wastes and Pollution Program, Technical Progress Report - 54.

Dove, G.D., 1961, "A Hydrologic Study of the Valley-Fill Deposits in the Venice Area, Ohio," Technical Report No. 4, Ohio Dept. of Natural Resources, Division of Water, Columbus, OH.

Dove, G.D. and S.E. Norris, 1951, "Conditions Governing the Occurrence of Groundwater in the Fernald Area, Ohio, with Reference to the Possibilities of Contamination by Disposal of Chemical Wastes," U.S. Geological Survey, Groundwater Branch, Columbus, OH.

Durrell, R.H., 1961, "The Pleistocene Geology of the Cincinnati Area," Field Trip 3 in Geological Soc. of America Guidebook for Field Trips, Cincinnati Meeting, Geological Soc. of America, New York, NY, pp. 47-57.

Ebasco Environmental Services, 1993, "Wetlands Delineation Report of the FEMP, Draft," FERMCO, Cincinnati, Ohio, prepared for the U.S. DOE, Fernald Field Office, Fernald, OH.

Facemire, C.F., S.I. Guttman, D.R. Osborne and R.H. Sperger, 1990, "Biological and Ecological Site Characterization of the Feed Materials Production Center," FMPC-SUB 018, prepared for Westinghouse Materials Co. of Ohio, Cincinnati, OH.

Federal Emergency Management Agency, 1982, "Flood Insurance Rate Map, County of Hamilton County, Ohio, (Unincorporated Areas)," Panel 10 of 105, National Flood Insurance Program, FEMA, n.p.

Federal Interagency Committee for Wetland Delineation, 1989, "Federal Manual for Identifying and Delineating Jurisdictional Wetlands," U.S. Army Corps of Engineers, U.S. Environmental Protection Agency, U.S. Fish and Wildlife Service, and U.S. Soil Conservation Service, Washington, DC.

Fernald Environmental Restoration Management Corporation (FERMCO), 1993 [Memorandum from M.E. Nelson, Subject: Fernald Risk Assessment Policy 93-9].

Fenneman, N.M., 1916, "The Geology of Cincinnati and Vicinity," Geological Survey of Ohio, Bulletin 19, Div. of Geological Survey, Columbus, OH.

Fleming, D.A. and K.N. Ross, 1984, "FMPC Environmental Monitoring Annual Report for 1983," NLCO-2018, National Lead Co. of Ohio, Cincinnati, OH., prepared for U.S. Dept. of Energy, Oak Ridge Operations Office, Oak Ridge, TN.

Ford, J.P., 1974, "Bedrock Geology of the Cincinnati West Quadrangle and part of the Covington Quadrangle, Hamilton County, Ohio," Report of Investigations No. 93, Ohio Dept. of Natural Resources, Division of Geological Survey, Columbus, OH.

Garcez, I. and Tittlebaum, M., 1984, "Investigation of Leachability of Subbituminous Fly Ash Enhanced Road Base Materials", in Fly Ash and Coal Conversion By-Products: Characterization, Utilization, and Disposal I. McCarthy, G. and Lauf, R., eds. Materials Research Society Symposium Proceedings, Vol. 43, Boston, MA.

No. 48 Geotrans, Inc., 1987*a*, "Data Input Guide for SWIFTIII, The Sandia Waste Isolation Flow and Transport Model for Fractured Media, Release 2.16, Modifications to NUREG/CR-3162," Geotrans, Herndon, VA.

GeoTrans, Inc., 1987*b*, "The Sandia Waste-Isolation Flow and Transport Model for Fractured Media, SWIFT III, Release 2.32," Herndon, VA.

GeoTrans, Inc., 1985, "Preliminary Characterization of the Groundwater Flow System Near the Feed Materials Production Center, Great Miami River Valley-Fill Aquifer, Fernald, Ohio," GeoTrans, Columbus, OH.

Gilbert, R.O., 1987, Statistical Methods for Environmental Pollution Monitoring, Van Nostrand Reinhold, New York, NY, 320 pps.

Haith, D.A., 1980, "A Mathematical Model for Estimating Pesticide Losses in Runoff," J. of Environmental Quality, Vol. 9, No. 3, pp. 428-433.

Henry, W. and Knapp, K., 1980, "Compound Forms of Fossil Fuel Fly Ash Emissions". Environ. Sci. Technol. 14, 450-465.

Hershfield, D.M., 1961, "Rainfall Frequency Atlas of the United States for Duration from 30 Minutes to 24 Hours and Return Periods from 1 to 100 Years," U.S. Dept. of Agriculture, available from the U.S. Government Printing Office.

Houck, I.E., 1921, "Rainfall and Runoff in the Miami Valley," Technical Reports, Part VIII, The Miami Conservancy District, Dayton, OH.

Howard, P.H., R.S. Boethling, W.F. Jarvis, W.M. Meylan, and E.M. Michalenko, 1991, Environmental Degradation Rates, Lewis Publishers, Inc., Chelsea, MI.

INTERA, 1983, "Geochemical Models Suitable for Performance Assessment of Nuclear Waste Storage: Comparison of PHREEQE and EQ3/EQ6," ONWI-473, INTERA Environmental Consultants, Houston, TX.

International Technology Corp., 1986, "Final Interim Report - Air, Soil, Water, and Health Risk Assessment in the Vicinity of the FMPC, Fernald, Ohio," Report and Data package prepared for the U.S. Dept. of Energy in support of the Fernald litigation, Oak Ridge Operations Office, Oak Ridge, TN.

International Technology Corp., 1988, "Hydrogeologic Study of the FMPC Discharge to the Great Miami River (Zone of Influence Report)," prepared for Westinghouse Materials Company of Ohio, U.S. Dept. of Energy, Oak Ridge Operations Office, Oak Ridge, TN.

International Technology Corp., 1990, "Flow and Solute Transport Computer Code Verification," Draft Report, Fernald RI/FS Groundwater Modeling, prepared for U.S. Dept. of Energy, Oak Ridge Operations Office, Oak Ridge, TN.

Jackson, K.J., 1988, "Verification and Validation Studies of the Addition of Pitzer"s Equations to the EQ3/6 Brine Model," UCRL-53841, Lawrence Livermore National Laboratory, Livermore, CA.

Javandel, I., C. Doughty and C.F. Tsang, 1984, "Groundwater Transport: Handbook of Mathematical Models," American Geophysical Union, Water Resource Monograph Series 10, Washington, DC.

Kerrisk, J.F., 1981, "Chemical Equilibrium Calculations for Aqueous Geothermal Brines," LA-8851-MS, Los Alamos National Laboratory, Los Alamos, NM.

No. 48 *National Council on Radiation Protection and Measurements (NCRP), 1984, "Evaluation of Occupational and Environmental Exposures to Radon and Radon Daughters in the United States," NCRP Report 78, National Council on Radiation Protection and Measurement, Bethesda, MD.*

National Lead Company of Ohio, (NLO), 1965-1985, "Aquifer Contamination Control Reports," various authors: C.F. Facemire, R.B. Weidner, M.W. Boback, and R.H. Starkey.

National Lead Company of Ohio (NLO), 1977, "Study of Radioactive Storage Areas at the Feed Materials Production Center," Report to U.S. Energy Research and Development Administration, Oak Ridge Operations Office, Oak Ridge, TN.

Nordstrom, D.K., 1979, "A Comparison of Computerized Chemical Models for Equilibrium Calculations on Aqueous Systems," ACS Symposium Series, Vol. 93, American Chemical Society, Washington, DC.

Norris, S.E., 1962, "Permeability of Glacial Till," United States Geological Survey Research, Article 224, Columbus, OH.

Oak Ridge Associated Universities, 1985, "Environmental Program Review of the Feed Materials Production Center, Fernald, Ohio," prepared for U.S. Dept. of Energy, Oak Ridge Operations Office, Oak Ridge, TN.

Ogata, A. and R.B. Banks, 1961, "A Solution of Differential Equation of Longitudinal Dispersion in Porous Media," U.S. Geological Survey Professional Paper 411-A, 7P, Reston, VA.

Ohio Environmental Protection Agency, 1982, "Comprehensive Water Quality Report for the Lower Mainstream of the Great Miami River (River Mile 92.5 - 0.9), Montgomery, Warren, Butler, and Hamilton Counties, Ohio," Final Draft, Division of Wastewater and Pollution Control, OEPA, Columbus, OH.

Ohio Dept. of Health, 1988, "Study of Radioactivity in Drinking Water and Other Environmental Media in the Vicinity of the U.S. Dept. of Energy's Feed Materials Production Center and Portsmouth Gaseous Diffusion Plant," prepared for U.S. Dept. of Energy, Oak Ridge Operations Office, Oak Ridge, TN.

Ohio Dept. of Natural Resources, 1974, "Endangered Wild Animals in Ohio," Publication 316, ODNR, Division of Wildlife, Columbus, OH.

Ohio Department of Natural Resources, 1982, "Rare Species of Native Ohio Wild Animals," ODNR, Division of Natural Areas and Preserves, Columbus, OH.

Parsons, 1993, "FEMP Glacial Till/Vados Zone Hydraulic Investigations Work Plan," FEMP, Fernald, OH.

Sedam, A.C., 1984, "Occurrence of Uranium in Groundwater in the Vicinity of the U.S. Dept. of Energy Feed Materials Production Center, Fernald, Ohio," U.S. Geological Survey Administrative Report, Columbus, OH.

Shapiro, S.S., and R.S. Francia, 1972, "An Approximate Analysis of Variance Test for Normality," Journal of the American Statistical Association, American Statistical Association, 67:215-216.

Shapiro, S.S. and M.B. Wilk, 1965, "An Analysis of Variance Test for Normality (complete samples)," Biometrica, 52:591-611.

Shelford, V.E. 1963, The Ecology of North America, University of Illinois Press, Urbana, IL.

Sitton, M.D., 1988, "Site Analysis, Feed Material Production Center, Fernald, Ohio, Interim Report," TS-PIC-88088, The Bionetics Corporation, Warrenton, Virginia, prepared for the U.S. EPA, Environmental Photographic Interpretation Center, Warrenton, VA.

Solebello, L.P., 1991, "Mineralogy of Soil Core Samples, Feed Materials Production Center, Fernald, Ohio," Contract report by McCrone Associates, Inc., Westmont, IL.

Spenceley, R.M., National Lead of Ohio, Inc., 1983, [Letter to M.R. Theisen, DOE, Subject: Non-FMPC sources of radioactivity in environmental samples].

Spieker, A.M., and S.E. Norris, 1962, "Groundwater Movement and Contamination at the AEC Feed Materials Production Center Located Near Fernald, Ohio," U.S. Geological Survey: Technical Report for the U.S. Atomic Energy Commission, Washington, DC.

Spieker, A.M., 1968a, "Groundwater Hydrology and Geology of the Lower Great Miami River Valley, Ohio, "U.S. Geological Survey Professional Paper 605-A, available from U.S. Government Printing Office, Washington DC.

Spieker, A.M., 1968c, "Future Development of the Groundwater Resource in the Lower Great Miami River, Ohio - Problems and Alternative Solutions," U.S. Geological Survey Professional Paper 605-D, available from U.S. Government Printing Office, Washington, DC.

Spieker, A.M., 1968b, "Effect of Increased Pumping of the Groundwater in the Fairfield-New Baltimore Area, Ohio - A Prediction by Analog-Model Study," U.S. Geological Survey Professional Paper 605-C, available from U.S. Government Printing Office, Washington, DC.

Starkey, R.H., et al., 1962, "Report of FMPC Ground Contamination Study Committee," FMPC-110, National Lead of Ohio, Cincinnati, OH.

Swinford, M. (in preparation), "Bedrock Geology of Hamilton County, Ohio," Ohio Dept. of Natural Resources, Division of Geological Survey, Columbus, OH.

U.S. Department of Agriculture, 1080, "Soil Survey of Butler County, Ohio," Soil Conservation Service, Ohio Dept. of Natural Resources, Division of Lands and Soil, and Ohio Agricultural Research and Development Center, USDA, ODNR, and Ohio Agricultural Research and Development Center, n.p.

U.S. Department of Agriculture, 1982, "Soil Survey of Hamilton County, Ohio," Soil Conservation Service, Ohio Dept. of Natural Resources, Division of Lands and Soil, and Ohio Agricultural Research and Development Center, USDA, ODNR and Ohio Agricultural Research and Development Center, n.p.

U.S. Department of Energy, 1985a, "Procedures for Sampling Radium-Contaminated Soils, GJ/TMC-13 UC-70, DOE, Washington, DC.

U.S. Department of Energy, 1985b, "Report of Historic Uranium Releases from Current DOE Oak Ridge Operations Office Facilities," DOE Oak Ridge Operations Office, Oak Ridge, TN.

U.S. Department of Energy, 1987, "Remedial Investigation and Feasibility Study, Feed Materials Production Center, Fernald, Ohio, Task 1 Report: Description of Current Situation," Vols. 1 and 2, DOE, Oak Ridge Operations, Oak Ridge, TN.

U.S. Department of Energy, 1988a, "FMPC Sampling and Analysis Report," Vols. 1 and 2, Draft, DOE, Oak Ridge Operations Office, Oak Ridge, TN.

U.S. Department of Energy, 1988b, "Remedial Investigation and Feasibility Study, Feed Materials Production center, Fernald, Ohio, Work Plan Requirements," Rev. 3, DOE, Oak Ridge Operations Office, Oak Ridge, TN.

U.S. Department of Energy, 1990a, "Groundwater Report, Feed Materials Production Center, Fernald, Ohio, Remedial Investigation and Feasibility Study," Vols. 1 and 2, DOE, Oak Ridge Operations Office, Oak Ridge, TN.

U.S. Department of Energy, 1991a, "Initial Screening of Alternatives for Operable Unit 2," Feed Materials Production Center, Fernald, Ohio, Remedial Investigation and Feasibility Study, DOE, Oak Ridge Operations Office, Oak Ridge, TN.

U.S. Department of Energy, 1991b, "RCRA Groundwater Monitoring Plan," Fernald Environmental Management Project, Fernald, OH.

U.S. Department of Energy, 1992, "Remedial Investigation and Feasibility Study, Fernald Environmental Management Project, Fernald, Ohio, Risk Assessment Work Plan Addendum," U.S. Dept. of Energy, Fernald Office, Fernald, OH.

U.S. Department of Energy, 1992a, "Risk Assessment Work Plan Addendum," Final Draft, Fernald Environmental Management Project, Remedial Investigation and Feasibility Study, Fernald, Ohio, DOE, Fernald Office, Fernald, OH.

U. S. Department of Energy, May 1992c, "Draft Removal Site Evaluation, Fernald Environmental Management Project Firing Range," DOE, Fernald Office, Fernald, OH.

U.S. Department of Energy, June 1992d, "Implementation Plan for the Remedial Investigation/Feasibility Study Environmental Impact Statement for Operable Unit 2 and Other Operable Units," Fernald Environmental Management Project, DOE, Cincinnati, OH.

U.S. Department of Energy, Sept. 1992e, [letter from Jack Craig, Fernald Remedial Action Project Manager, to James A. Saric, U.S. EPA, and Graham Mitchell, Ohio EPA, Subject - Results of Characterization Trenching in the Operable Unit 2 Solid Waste Landfill and South Field Area 2], DOE Fernald Field Office, Fernald, OH.

U.S. Department of Energy, Sept. 1992f, "Fernald Environmental Management Project Site Wide CERCLA Quality Assurance Plan (SCQ)," U.S. DOE, Fernald Field Office, Fernald, OH.

U.S. Department of Energy, 1993a, "CERCLA/RCRA Background Soil Study."

U.S. Department of Energy, 1993b, "Sampling and Analysis Plan (SAP) for the RI/FS Work Plan Addendum for Operable Unit 2."

U.S. Department of Energy, 1993c, "Site-Wide Characterization Report, FEMP, Fernald, Ohio, Remedial Investigation and Feasibility Study," U.S. DOE, Fernald Office, Fernald, OH.

NO. 5-3 U.S. Department of Energy, 1993d, "Remedial Investigation Report for Operable Unit 4 (Final)," U.S. DOE, Fernald Field Office, Fernald, OH.

NO. 5-3 U.S. Department of Energy, 1993f, "Surface Water Flow and Infiltration Model Summary Report, Draft Final," U.S. DOE, Fernald Field Office, Fernald, OH.

No. 48 ***U.S. Department of Energy, 1994, "Supplemental Guidance to the Risk assessment Work Plan Addendum," Fernald Environmental Management Project, U.S. DOE, Fernald Field Office, Fernald, OH.***

U.S. Environmental Protection Agency, 1975, Coal Fired Power Plant Trace Element Study, U.S. EPA, Washington, DC.

U.S. Environmental Protection Agency, 1975, Environmental Effects of Trace Elements from Ponded Ash and Scrubber Sludge. Electric Power Research Institute (EPRI).

U.S. Environmental Protection Agency, 1978, "Environmental Assessment of Coal- and Oil-Firing in a Controlled Industrial Boiler", (EPA-600/7-78-164c), EPA, Washington, DC.

U.S. Environmental Protection Agency, 1984, "The Hydrologic Evaluation of Landfill Performance (HELP) Model," EPA/530-SW-84-009, EPA, Office of Solid Waste and Emergency Response and EPA Municipal Research Laboratory, Office of Research and Development, Washington, DC.

NO. 5-3 U.S. Environmental Protection Agency, 1985, "Rapid Assessment of Exposure to Particulate Emissions from Surface Contamination Sites," EPA/600/8-85/002, U.S. EPA, Office of Health and Environmental Assessment, Washington, DC.

NO. 5-3 U.S. Environmental Protection Agency, 1986b, "Guideline on Air Quality Models (Revised)," including Supplement A, July 1987, and Supplement B, February 1993, EPA-450/2-78-027R, U.S. EPA, Office of Air Quality Planning and Standards, Research Triangle Park.

U.S. Environmental Protection Agency, 1987a, "A Method for Estimating Fugitive Particulate Emissions from Hazardous Waste Sites," EPA/6002-87-066, EPA, Washington, DC.

U.S. Environmental Protection Agency, Dec. 1987b, "Industrial Source Complex (ISC) Model User's Guide," 2nd Ed. (Revised), EPA-450/4-88-002a, EPA, Washington, DC.

No. 53 U.S. Environmental Protection Agency, 1987c, "On Site Meteorological Program Guidance for Regulatory Modeling Applications," including revisions through February 1993, EPA/450/1-87-013, U.S. EPA, Office of Air Quality Planning and Standards, Research Triangle Park.

U.S. Environmental Protection Agency, 1988a, "Guidance for Conducting Remedial Investigations and Feasibility Studies Under CERCLA," EPA/540/G-89/004, EPA, Office of Emergency and Remedial Response, Washington, DC

U.S. Environmental Protection Agency, 1988c, "Superfund Exposure Assessment Manual," EPA/540/1-88/001, EPA, Office of Remedial Response, Washington, DC.

U.S. Environmental Protection Agency, 1988b, "Site Analysis, Feed Materials Production Center, Fernald, Ohio; Interim Report," prepared by Mary D. Sitton of Bionetics Corp., for EPA Office of Research and Development, Las Vegas, NV.

U.S. Environmental Protection Agency, 1989a, "Statistical Analysis of Groundwater Monitoring Data at RCRA Facilities," EPA/530-SW-89-026, EPA, Office of Solid Waste, Washington, DC.

No. 48 ***U.S. Environmental Protection Agency, 1989d, "Overview of ARARs, Focus on ARAR Waivers," EPA Publication 9234.2-03/FS, EPA, Office of Solid Waste and Emergency Response, Washington, DC.***

No. 53 U.S. Environmental Protection Agency (EPA), 1989e, "Air/Superfund National Technical Guidance Study Series, Volume IV - Procedures for Dispersion Modeling and Air Monitoring for Superfund Air Pathway Analysis," EPA/450/1-89/004, U.S. EPA, Office of Air Quality Planning and Standards, Research Triangle Park.

No. 48 ***U.S. Environmental Protection Agency (EPA), 1990, "CERCLA Compliance with the CWA and SDWA," EPA Publication 9234.2-06/FS, EPA, Office of Solid Waste and Emergency Response, Washington, DC.***

U.S. Environmental Protection Agency (EPA), 1991c, "Risk Assessment Guidance for Superfund, Vol. I: Human Health Evaluation Manual, Part B, Development of Risk-Based Preliminary Remediation Goals," EPA Publication 9284.7-01B, EPA, Office of Emergency and Remedial Response.

U.S. Environmental Protection Agency, 1992a, "Guidance on Risk Characterization for Risk Assessors and Risk Managers," Memorandum dated February 26, 1992.

U.S. Environmental Protection Agency, 1992b, "Guidance for Exposure Assessment; Notice,"Federal Register, Vol. 57, No. 104, pp. 22888-22938.

U.S. Environmental Protection Agency, 1992c, "Integrated Risk Information System (IRIS0," computer database, EPA, Washington, DC.

U.S. Environmental Protection Agency, 1992d, "Health Effect Assessment Summary Tables, Annual FY 1992, OERR 9200.6-303 (92-1), EPA, Washington, DC.

United States Environmental Protection Agency, 1989c, "Mouse Oral Subchronic Toxicity Study," Prepared by Toxicity Research Laboratories, Ltd., Muskegon, MI for Office of Solid Waste, Washington, DC. (Cited in U.S. EPA, 1992a).

U.S. Environmental Protection Agency, 1988, "Superfund Exposure Assessment Manual," EPA/540/1-88/001, EPA, Office of Remedial Response, Washington, DC.

U.S. Environmental Protection Agency, 1986, "Guidelines for Carcinogen Risk Assessment," Federal Register, Volume 51, pp. 33992-34003.

U.S. Environmental Protection Agency, 1993, "Health Effects Assessment Summary Tables, FY-1993," (OERR), EPA, Washington, DC.

U.S. Environmental Protection Agency, 1989a, "Risk Assessment Guidance for Superfund: Human Health Evaluation Manual, Part A, Interim Final," EPA/540/1-89/002, EPA, Office of Emergency and Remedial Response, Washington, DC.

U.S. Environmental Protection Agency, 1989c, "Mouse Oral Subchronic Toxicity Study," Prepared by Toxicity Research Laboratories, Ltd., Muskegon, MI. for Office of Solid Waste, Washington, DC. (Cited in U.S. EPA, 1992a).

NO. 5-3 U.S. Nuclear Regulatory Commission (NRC), 1984, "Radon Attenuation Handbook for Uranium Mill Tailing Cover Design," NUREG/CR-3533, U.S. NRC, Office of Nuclear Regulatory Research, Washington, D.C.

United Nations, 1982, "Ionizing Radiation: Source and Biological Effects," 1982 Report to the General Assembly, with Annexes, United Nations Scientific Committee on the Effects of Atomic Radiation, New York.

Vormelker, J., 1985, "Top of Rock Map of Hamilton County, Ohio," Open File Map 229, Ohio Department of Natural Resources, Division of Geological Survey, Columbus, OH.

Wagner, P. and N. Greiner, 1982, Third Annual Report Radioactive Emissions from Coal Production and Utilization, October 1, 1980 - September 30, 1981. DOE Contract No. W-7405-ENG-36, LA-9359-PR. Los Alamos, NM, Los Alamos National Laboratory.

Walker, A.C., 1986, "Groundwater Resources of Hamilton County," map available from the Ohio Dept. of Natural Resources, Division of Water, Columbus, OH.

Walton, W.C. and E.J. Schaefer, 1956, "Report to the Southwestern Ohio Water Company on Evaluation of the Potential Yield of the Aquifer in the Big Bend Area, Ohio," Mimeographed report.

Walton, W., 1984, Practical Aspects of Groundwater Modeling, National Water Well Association, 2nd Edition, Worthington, OH.

Watkins, J.S. and A.M. Spieker, 1971, "Seismic Reduction Survey of Pleistocene Drainage Channels in the Lower Great Miami River Valley, Ohio," Professional Paper 605-B, U.S. Geological Survey, Columbus, OH.

Watson, J.S., 1985, "A Survey of Ash Sources for Mineral Recovery", in Fly Ash and Coal Conversion By-Products: Characterization, Utilization and Disposal II. McCarthy, G., et. al., eds. Materials Research Society Symposium Proceedings, Vol. 65, Boston, MA.

Westinghouse Environmental Management Company of Ohio, 1992, [telephone communication between Fletcher Armstrong, Deputy Operable Unit 2 Manager for ASI, and Jay Herskowitz of WEMCO, Subject - Firing range sampling and analysis, July 20].

Westinghouse Materials Company of Ohio, 1987, "Feed Materials Production Center Environmental Monitoring Annual Report for 1986," FMPC-2076, WMCO, Cincinnati, OH., prepared for U.S. Dept. of Energy, Oak Ridge Operations Office, Oak Ridge, TN.

Westinghouse Materials Company of Ohio, 1988, "A Closer Look at Uranium Metal Production, A Technical Overview."

Westinghouse Materials Company of Ohio, 1991, "Feed Materials Production Center Annual Environmental Report for Calendar Year 1990," FEMP-2245, WMCO, prepared for the U.S. Dept. of Energy, Fernald Office, Fernald, OH.

Westinghouse Materials Company of Ohio, 1989, "Feed Materials Production Center Environmental Monitoring Annual Report for 1988," FMPC-2173, WMCO, Cincinnati, OH., prepared for U.S. Dept. of Energy, Oak Ridge Operations Office, Oak Ridge, TN.

Westinghouse Environmental Materials Co. of Ohio (WEMCO), 1990, "Feed Materials Production Center Annual Environmental Monitoring Report," prepared for U.S. Dept. of Energy, Fernald Office, Fernald, OH.

Westinghouse Materials Company of Ohio, 1986, "Feed Materials Production Center Environmental Monitoring Annual Report for 1985," FMPC-2047, WMCO, Cincinnati, OH., prepared for U.S. Dept. of Energy, Oak Ridge Operations Office, Oak Ridge, TN.

Westinghouse Materials Co. of Ohio (WMCO), 1989, "Feed Materials Production Center Environmental Monitoring Annual Report for 1988," FMPC-2173, WMCO, Cincinnati, OH., prepared for U.S. Dept. of Energy, Oak Ridge Operations Office, Oak Ridge, TN.

Westinghouse Environmental Materials Company of Ohio (WEMCO), 1991, "Feed Materials Production Center Annual Environmental Report for 1990," FMPC-2245, prepared for U.S. Dept. of Energy, Oak Ridge Operations Office, Oak Ridge, TN.

Weston, Inc., Roy F., 1987b, "Characterization Investigation Study, Volume 2: Chemical and Radiological Analysis of the Waste Pits," prepared for Westinghouse Materials Company of Ohio, U.S. Dept. of Energy Feed Materials Production Center, Fernald, OH.

United States Environmental Protection Agency, 1993, "Health Effects Assessment Summary Tables, FY - 1993," (OERR), EPA, Washington, DC.

Weston, Inc., Roy F., 1988, "Geotechnical Evaluation of Material Properties of Waste Pit Materials at the Feed Materials Production Center, Fernald, Ohio," prepared for Westinghouse Materials Company of Ohio, U.S. Dept. of Energy Feed Materials Production Center, Fernald, OH.

Weston, Inc., Roy F., 1987c, "Characterization Investigation Study, Volume 3: Radiological Survey of Surface Soils,: [with two signatures on title page] prepared for Westinghouse Materials Company of Ohio, U.S. Dept. of Energy Feed Materials Production Center, Fernald, OH.

Weston, Inc., Roy F., 1987a, "Characterization Investigation Study, Volume 1: Geophysical Survey," prepared for Westinghouse Materials Company of Ohio, U.S. Dept. of Energy Feed Materials Production Center, Fernald, OH.

Weston, Inc., Roy F., 1986b, "Site Characterization of the Waste Storage Areas, Part 2: Support Documentation," Vols. 1 & 2, prepared for Westinghouse Materials Company of Ohio, U.S. Dept. of Energy Feed Materials Production Center, Fernald, OH.

Wolery, T.J. and S.A. Daveler, 1989, "EQ6, A Computer Program for Reaction-Path Modeling of Aqueous Geochemical Systems: User's Guide and Documentation," UC-70, Lawrence Livermore National Laboratory, Livermore, CA.

Wolery, T.J., 1983, "EQ3NR, A Computer Program for Geochemical Aqueous Speciation-Solubility Calculations: User's Guide and Documentation," UCRL-53414, Lawrence Livermore National Laboratory, Livermore, CA.

TABLE OF CONTENTS
(Continued)

A.2.2.1 Geologic Setting A-2-7
A.2.2.2 Vadose Zone A-2-10
A.2.2.3 Great Miami Aquifer A-2-12
A.2.2.4 General Contaminant Hydrogeology at the FEMP A-2-13
A.2.3 Conceptual Model A-2-13
A.2.3.1 Solid Waste Landfill A-2-18
A.2.3.2 Lime Sludge Ponds A-2-18
A.2.3.3 Inactive Flyash Pile and South Field A-2-25
A.2.3.4 Active Flyash Pile A-2-31
A.2.4 Approach for Source Term Development A-2-31
A.2.4.1 Site-Specific Data A-2-31
A.2.4.2 Source Term Development A-2-34
A.2.4.3 Estimation of Leachate Concentrations A-2-36
A.2.4.4 Uncertainty in Estimating Leachate Compositions A-2-38
A.2.5 Parameters A-2-39
A.2.6 Constitutent Screening and Review - Vadose Zone Pathway A-2-45
A.2.6.1 Background Screening A-2-49
A.2.6.2 Toxicological Screening A-2-50
A.2.6.3 Vadoes Zone Model Toxicity Screening A-2-50
A.2.6.4 Great Miami Aquifer Dilution Screening A-2-51
A.2.6.5 Groundwater Data Review A-2-51
A.2.7 Vadose Zone Modeling A-2-51a
A.2.7.1 Estimating Infiltration Rates A-2-52
A.2.7.1.1 Description of HELP Model A-2-52
A.2.7.1.2 Infiltration Rate Results A-2-53
A.2.7.2 ODAST Description A-2-61
A.2.7.3 ODAST Modeling Results and Screening of CPCs A-2-65
A.2.8 Aquifer Modeling A-2-109
A.2.8.1 Background, Description, and Development of Model . . . A-2-109

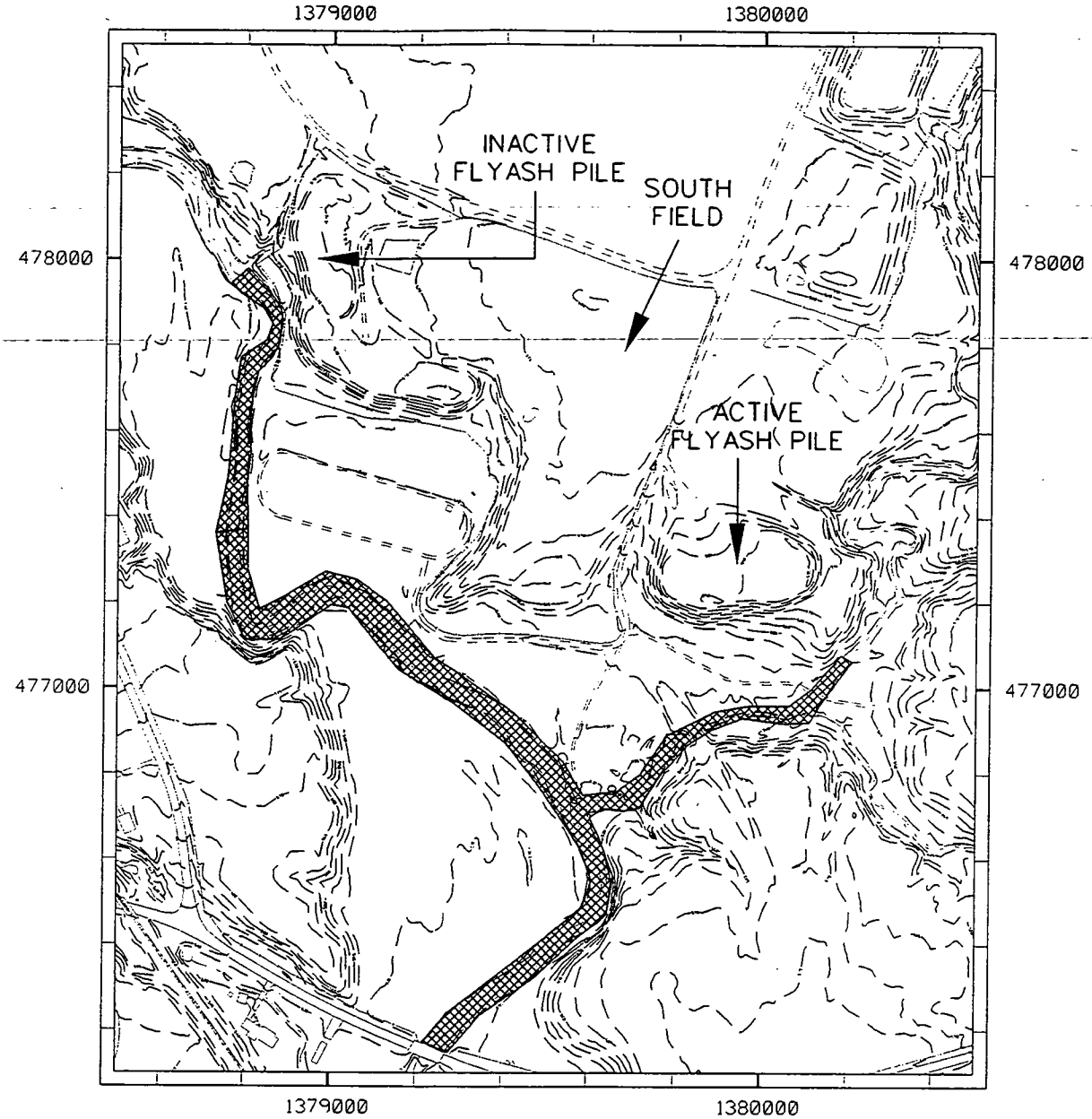

LEGEND

- PAVED ROADS
- UNPAVED ROADS
- STREAM
- FENCE
- 585 TOPOGRAPHIC CONTOUR LINE
- LINEAR EXTENT OF SURFACE WATER INFILTRATION TO THE GMA

NOTE:
Coordinates are in State Planar NAD 1927.
Surface contours based on 1992 flyover.

N

SCALE (FT)
0 200 400 800

FIGURE A.1-6B
SURFACE WATER RUNOFF INFILTRATION TO THE GMA FROM SOUTH FIELD AND FLYASH PILES

figa0106.dgn

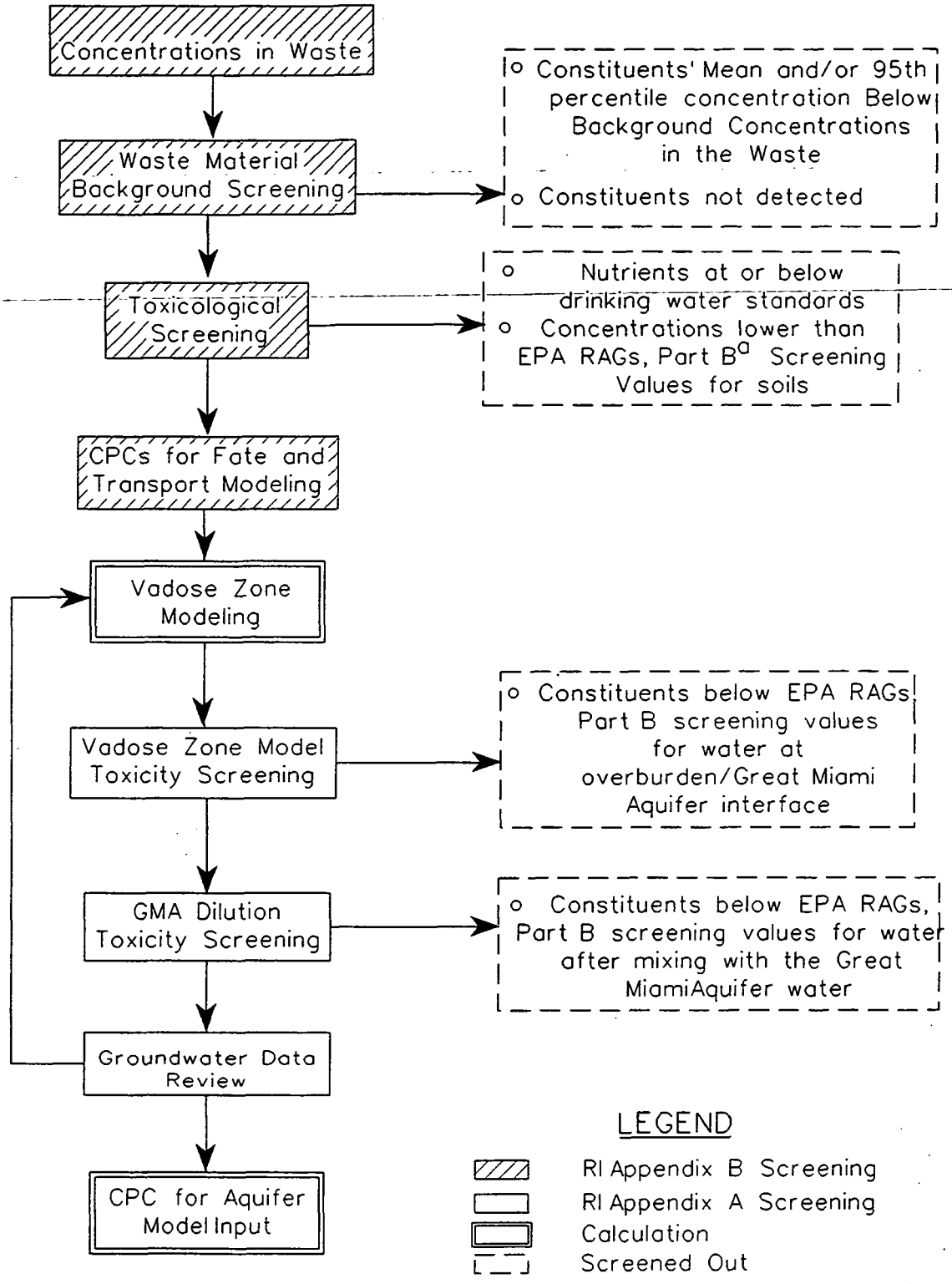

[a] EPA Risk Assessment Guidence, Part B **(EPA, 1991d).**

fig0212.dgn

000146

FIGURE A.2-13
POTENTIAL CONSTITUENT OF CONCERN SCREENING DIAGRAM

all grid blocks) was below the screening concentration, then the constituent was screened out and was not modeled further.

A.2.6.4 Great Miami Aquifer Dilution Screening

CPCs passing the vadose zone model toxicity screening were further screened by predicting dilution in the Great Miami Aquifer. Predicted Great Miami Aquifer concentration was calculated using:

$$C_{GMA} = \frac{C_v \, q \, A}{Q_{GMA}}$$

where

A	=	Area of cell (125 x 125 ft^2)
C_{GMA}	=	Predicted maximum Great Miami Aquifer concentration
C_v	=	Maximum output concentration from the vadose zone model
Q_{GMA}	=	Groundwater flow rate through the upper layer of the SWIFT III model in the cell with maximum vadose zone concentration
q	=	Infiltration rate in the cell with maximum vadose zone concentration

Predicted maximum concentration, C_{GMA}, is typically an order of magnitude lower than from the detailed calculations using the SWIFT III model. The above dilution calculation is conservative because waste storage in the cell is not considered. The C_{GMA} for a particular constituent is compared with the ~~10^{-7} risk level for carcinogens or the 0.1 HI level for noncarcinogens~~ EPA RAGs, Part B screening concentrations. If C_{GMA} was below the screening concentration, then the constituent was screened out and was not modeled further.

NO. A-48

No. 10 *A.2.6.5 Groundwater Data Review*

The vadose zone modeling results were compared against the Great Miami Aquifer data. If the model predictions were not in agreement with the Great Miami Aquifer data, model parameters, assumptions, and conceptual models were reviewed and modified accordingly. If the vadose zone model was refined, the vadose zone model calculations were repeated and the vadose zone model toxicity screening and the Great Miami Aquifer dilutions toxicity screening steps were repeated. This process was continued until the model predictions were in agreement with the field measured

data. Detailed modeling in the Great Miami Aquifer was performed for the CPCs remaining from the Great Miami Aquifer dilution toxicity screening.

A.2.7 VADOSE ZONE MODELING

Vadose zone modeling was performed to estimate CPC loading rates to the Great Miami Aquifer from a given source as a function of time. The overburden may have great capacity for immobilization and retardation of CPCs due to adsorption, precipitation, biodegradation, and radioactive decay. This capacity to prevent or slow the movement of CPCs to the aquifer is evaluated with respect to future risk.

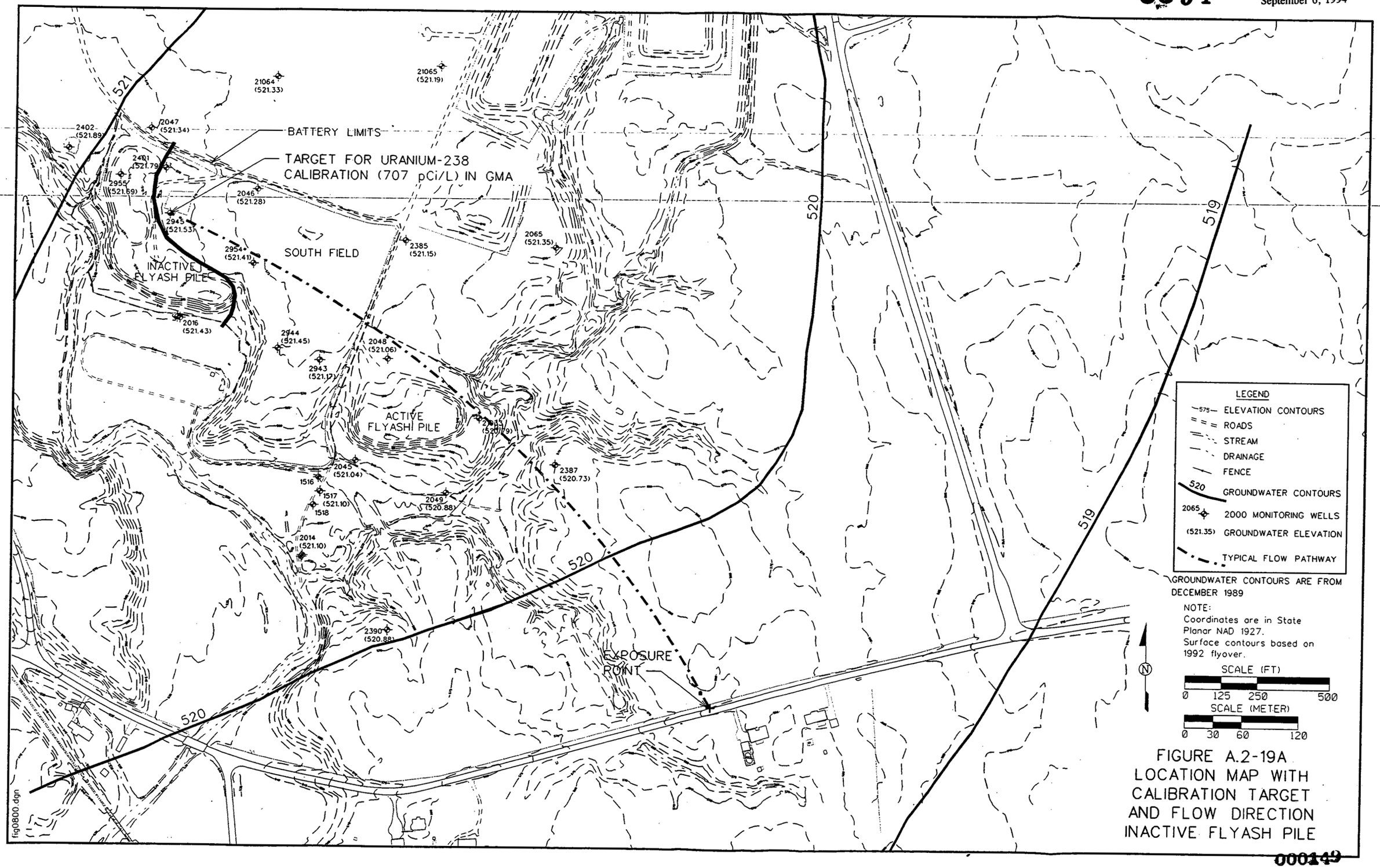

FIGURE A.2-19A
LOCATION MAP WITH CALIBRATION TARGET AND FLOW DIRECTION INACTIVE FLYASH PILE

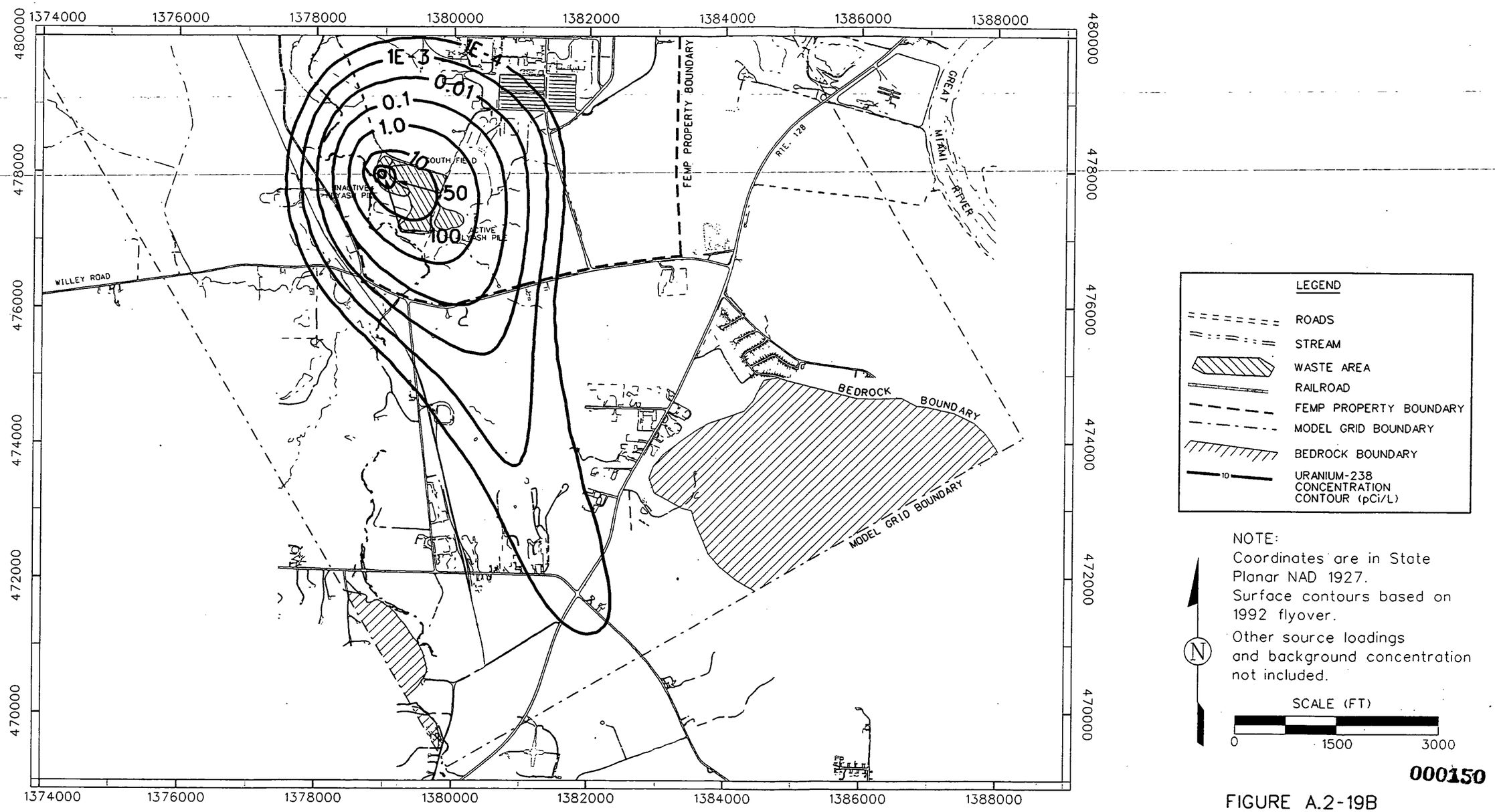

000150

FIGURE A.2-19B
PROJECTED INCREASE IN URANIUM-238 CONCENTRATION IN GREAT MIAMI AQUIFER AT 40 YEARS DUE TO LOADING FROM THE INACTIVE FLYASH PILE AND SOUTH FIELD

MAXIMUM PREDICTED INCREASE IN CONCENTRATION = 134 pCi/L
MAXIMUM MEASURED CONCENTRATION = 707 pCi/L

fig0519.dgn

Figure A.2-18 shows that plume migration from the Lime Sludge Ponds is in an east-southeasterly direction. At 1,000 years, concentrations of technetium-99 were predicted to be significantly below the screening level.

NO. A-9

A.2.8.3.3 Inactive Flyash Pile/South Field

The Operable Unit 2 SWIFT III model and parameters were calibrated for uranium-238. Uranium-238 was selected for calibration because of its high detection frequency, very sensitive analytic procedure, because it was expected to be the main parameter of concern for risk assessment, and because hot spots for it were identified and modeled. Use of uranium at the site began in the 1950's. Current uranium-238 concentrations in the Great Miami Aquifer in the vicinity of the South Field area

No. 9 was detected as high as ~~384~~ *707* pCi/L at well 2945 in the validated *un*filtered samples. ~~and on-site (non-validated) analysis indicated that t~~ *T*he total uranium concentration *from these samples* is as high as ~~2100~~ *2070* μg/L (equivalent to 587 pCi/L of uranium-238). Figure A.2-19A shows present day concentrations at calibration targets and flow direction for the fate and transport model calibration.

NO. A-9

SWIFT III was first run using a K_d of 8.4 ml/g for uranium (Uranium Partition Coefficient Evaluation Study for Operable Unit 2, 1993) in the Great Miami Aquifer. SWIFT III model results indicated that it will take more than 200 years to reach current concentrations levels in the Great Miami Aquifer. Since uranium break through for K_d of 8.4 ml/g does not occur until after 16*0* years, calibration cannot be done by increasing waste concentration alone. Through calibration process, the K_d value in the Great Miami Aquifer (and ODAST) was reduced to 1.48 ml/g. At 40 years from placement of waste in the South Field area subunits (approximately current conditions), model predicted uranium-238 concentrations in the Great Miami Aquifer to be 134 pCi/L (Figure A.2-19B)

No. 9 in the grid cell containing the Well 2945, ***as compared to 707 pCi/L measured at Well 2945***. This is considered a good calibration of the model given the limitations that source areas smaller than 125-by-125 feet cannot be assigned. The uranium break through close to the Well 2945 is due to subsurface seeps. Although subsurface seeps do not travel laterally, 125 feet on the unsaturated Great Miami Aquifer, model limitations required that subsurface seep mass be loaded uniformally over the full 125-by-125 foot cell. If subsurface seeps infiltrate through a 20 to 50-foot wide area, this can easily result in underestimation of concentrations near subsurface seeps at 40 years by a factor of 3 to 6. Since the overall maximum loading is due to vadose zone pathway (Figure A.2-20), which is

uniformly distributed over the full grid cell, the maximum predicted uranium-238 concentrations for the baseline risk assessment are not very sensitive

within each subunit; and they are consistent with draft FEMP risk assessment guidelines for exposure scenarios (most recent version is dated October 19, 1993). These land use assumptions and receptors, which provide the framework for the quantitative estimates of risk, are described in detail in Section 2.0 of this RI report.

Environmental sampling data collected from Operable Unit 2 during both phases of the RI field investigation were used in this risk assessment. Once the data set was complete, statistical methods were used to evaluate the analytical results from each waste area in order to: (1) identify CPCs specific to the waste areas, (2) develop waste area specific source term concentrations for fate and transport modeling, and (3) establish waste area specific exposure point concentrations of potential receptor locations. The detailed CPC selection process is described in Section 2.0 of this RI report.

B.1.3 RISK ASSESSMENT GUIDANCE

This baseline risk assessment follows the guidance available from EPA as of September 1993. In accordance with the 1991 Amended Consent Agreement between EPA and DOE , the methodology presented in the Risk Assessment Work Plan Addendum (DOE 1992a) was prepared to establish specific risk assessment methodology to be followed in all RI/FS risk assessments for the FEMP. The Risk Assessment Work Plan Addendum is based primarily on the following EPA guidance and databases:

- Risk Assessment Guidance for Superfund (EPA 1989a)
- *No. 48* Exposure Factors Handbook (EPA 1989~~b~~ *c*)
- Risk Assessment Guidance for Superfund: Human Health Evaluation Manual, Volume I, Supplemental Guidance, Standard Default Exposure Factors, Interim Final (EPA 1991~~a~~ *b*)
- Health Effects Assessment Summary Tables (HEAST) (EPA 1993b).

B.1.4 ORGANIZATION OF BASELINE RISK ASSESSMENT

Section B.1.0 contains an overview of the purpose for this baseline risk assessment, the scope of the assessment, the guidance used in preparing the risk assessment, and describes Operable Unit 2 history and site conditions.

Operable Unit 2 was defined as a functional unit to efficiently address the remediation of waste subunits with relatively large volumes of waste but presumed to contain small quantities of hazardous materials and radionuclides. Operable Unit 2 includes the following individual areas:

- Solid Waste Landfill
- North and South Lime Sludge Ponds
- South Field
- Inactive Flyash Pile
- Active Flyash Pile

The locations of the Operable Unit 2 areas within the Fernald site are presented in Figure B.1-1. The Solid Waste Landfill is located on a small tract at the northeast corner of the Waste Storage Area (Figure B.1-1). The landfill occupies approximately one acre of land and is covered by a layer of soil. The total estimated volume of fill in the landfill is about 14,400 cubic yards. Materials reported to have been disposed at the landfill include bagged trash and wood; respirator cartridges, asphalt roofing materials, medical wastes, firehoses, and rubber hoses/belts; and medicine vials, bagged asbestos, ceramic tiles, magnesium fluoride, glass acid bottles, steel cables/cans, paint cans, and copper tubing.

The North Lime Sludge Pond is an active unlined pond located southeast of the Waste Storage Area (Figure B.1-1). The approximate dimensions of sludge in the pond are 125 feet by 225 feet by 5.3 feet deep, with a total volume of approximately 5000 cubic yards, not including berms. This pond is approximately 90 percent full and is partially covered with water. This pond contains an estimated 150,000 gallons of water with a depth that varies to 7 feet and an average depth of 2 to 3 feet. Spent lime sludges (primarily lime-alum and boiler blowdown) from the FEMP water
No. 48 treatment plant operations are conveyed to this pond ~~(DOE 1993c)~~.

The South Lime Sludge Pond is an inactive unlined pond located southeast of the Waste Storage Area (Figure B.1-1). The South Lime Sludge Pond is 125 feet by 225 feet by 11.2 feet deep, with a total
No. 48 volume of approximately 10,000 cubic yards, not including berms ~~(DOE 1993c)~~. This pond was retired in the mid-1960s and is now overgrown with grass. The use of this pond was similar to that of the North Lime Sludge Pond.

The Inactive Flyash Pile is located approximately 2,000 feet south/southeast of the Waste Storage Area (Figure B.1-1). The pile occupies approximately two acres. It is west of and contiguous to the

Justification: With a small data set, the distribution of concentration data often cannot be adequately assessed. Without knowing the proper distributional assumptions, it is not valid to calculate the 95 percent UCL.

2. The selection of CPC, which is the subset of constituents determined to be present above background, is performed using traditional statistical methods including the Students t-test and the Wilcoxon Rank Sum test, except when these tests cannot be validly applied. A comparison of each site related measurement to the 95th percentile of background data is also performed on sample sets less than 30 for the purposes of identifying CPCs which may have been "averaged out" by the statistics. ~~This comparison will not eliminate CPCs already identified but may add additional ones.~~ Details of these statistical methods are discussed in Section B.2.3.5.1.

No. B-5

Justification: The comparison of detected concentrations to the 95th percentile of the background ensures that constituents potentially present above naturally occurring levels will not be ruled out as CPCs.

3. The selection of CPCs, which is the subset of detected constituents that is carried through the risk assessment, followed a systematic approach recently approved by EPA for use at this site. This approach is described in detail in Section B.2.3.

Justification: This approach facilitates a consistent, statistically and toxicologically defensible approach to selecting constituents for which risk will be quantified.

4. Background soil data from literature sources are replaced with data from the March 1993 CERCLA/RCRA Background Soil Study (DOE 1993f).

Justification: Site-specific background soil data provides a more accurate measure of background concentrations.

5. Airborne particulate concentrations of constituents are calculated using the Industrial Source Complex Long Term (ISCLT2) dispersion model (EPA ~~1987b~~ *1992b*).

No. 48

Justification: The ISCLT2 dispersion model is one of the EPA's guideline models. It is a sector-averaged, Gaussian plume model capable of calculating seasonal or annual ground level constituent concentrations in suspended particulates. The ISCLT2 model predicts concentrations at grid points set by the user and has the capability to model multiple release sources. The model contains a number of options, allowing the user to make the model more site-specific.

6. The Andelman Model (Andelman 1990) for modeling volatile releases to air from water used in the home is used in the risk assessment.

No. B-4

Justification: Use of the Andelman Model reflects the most recent EPA guidance for evaluation of the pathway involving inhalation of volatiles released to air from water used in the home.

000155

5894

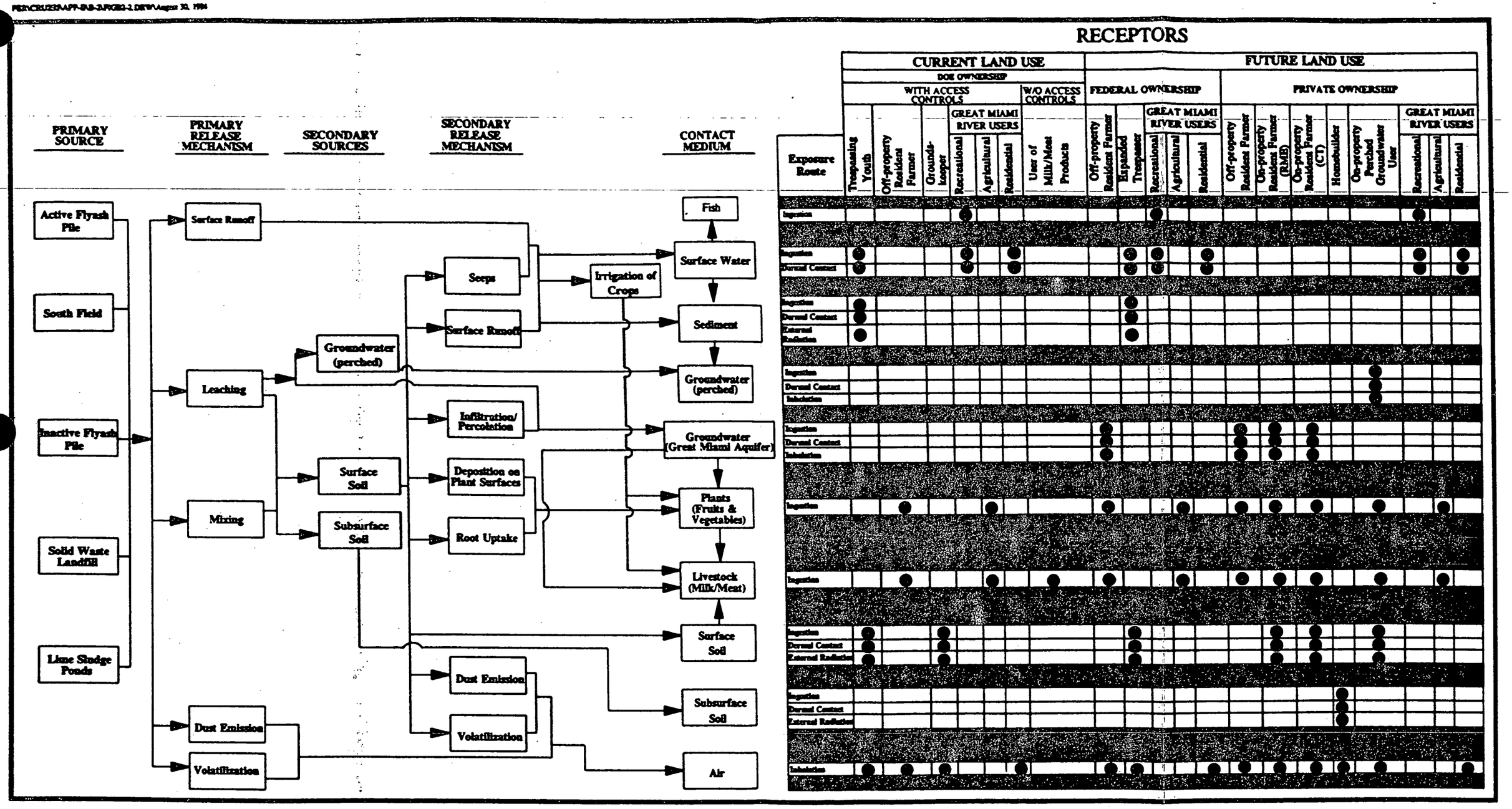

FIGURE B.2-2 GENERAL CONCEPTUAL SITE MODEL/OPERABLE UNIT 2

000156

Comment No. 48

TABLE B.2-2

GENERIC DESCRIPTION OF EXPOSURE SCENARIOS AND EXPOSURE POINT CONCENTRATIONS OPERABLE UNIT 2 BASELINE RISK ASSESSMENT

Current Land Use	Receptor	Direct Contact Medium	Route of Exposure		Exposure Point Concentration
Current with Access Controls (current use of FEMP continues, DOE ownership)	Trespassing Youth	surface soil	incidental ingestion dermal contact external radiation		surface soil within subunit
		air	inhalation	particulates, volatiles, and gases	maximum estimated on-subunit current concentration derived from air modeling
		surface water	incidental ingestion dermal contact		surface water within subunit
		sediment	incidental ingestion dermal contact external radiation		sediment within subunit
	Off-Property Resident Farmer (adult and child), homegrown produce off-property, livestock grazing off-property	air	inhalation	particulates, volatiles, and gases	maximum estimated off-property current concentrations derived from air modeling
		plants (homegrown produce)	ingestion	fruits and vegetables	maximum estimated off-property current concentrations derived from air modeling
		livestock (grazing off-property)	ingestion	milk beef	maximum estimated off-property current concentrations derived from air modeling
	Groundskeeper	air	inhalation	particulates, volatiles and gases	maximum estimated on-subunit current concentration derived from air modeling
		surface soil	incidental ingestion dermal contact external radiation		surface soil within subunit

TABLE B.2-2
(Continued)

Current Land Use	Receptor		Direct Contact Medium	Route of Exposure		Exposure Point Concentration
Current with Access Controls (current use of FEMP continues, DOE ownership) (Continued)	Great Miami River Users	Recreational User	surface water	ingestion dermal contact		estimated concentrations in the Great Miami River
			fish	ingestion		estimated concentrations in the Great Miami River
		Agricultural User	plants (homegrown produce irrigated with water from Great Miami River)	ingestion	fruit and vegetables	estimated concentrations in the Great Miami River
			livestock (grazing on crops irrigated with water from Great Miami River)	ingestion	beef and milk	estimated concentrations in the Great Miami River
		~~Residential~~ *Household* User	surface water	inhalation ingestion dermal contact	particulates, volatiles, and gases	estimated concentrations in the Great Miami River
Current without Access Controls (current use of FEMP continues)	User of Meat and Milk Products		livestock (grazing on-property)	ingestion of milk and beef		maximum estimated on-property current concentrations derived from air modeling

5894

TABLE B.2-2
(Continued)

Future Land Use	Receptor	Direct Contact Medium	Route of Exposure		Exposure Point Concentration
Federal Ownership	Future Off-Property Farmer (adult and child), homegrown produce off-property, grazing off-property, groundwater off-property	air	inhalation	particulates, volatiles, and gases	maximum estimated off-property future concentrations derived from air modeling
		plants (homegrown produce)	ingestion	fruits and vegetables	maximum estimated off-property future concentrations derived from air modeling and groundwater modeling
		livestock (grazing at property boundary)	ingestion	milk and beef	maximum estimated off-property future concentrations derived from air modeling and groundwater modeling
		groundwater	ingestion dermal contact inhalation of volatiles released during household use		modeled groundwater concentrations at fenceline when concentration is greatest
	Expanded Trespasser (youth)	air	inhalation	particulates, volatiles, and gases	maximum estimated on-subunit air concentrations derived from air modeling
		surface soil	incidental ingestion dermal contact external radiation		surface soil within subunit
		surface water	incidental ingestion dermal contact		surface water within subunit
		sediment	ingestion dermal contact external radiation		sediment within subunit

000159

5894

TABLE B.2-2
(Continued)

Future Land Use	Receptor		Direct Contact Medium	Route of Exposure		Exposure Point Concentration
Federal Ownership (Continued)	Great Miami River Users	Recreational User	surface water	ingestion dermal contact		estimated concentrations in the Great Miami River
			fish	ingestion		estimated concentrations in the Great Miami River
		Agricultural User	plants (homegrown produce irrigated with water from Great Miami River)	ingestion	fruit and vegetables	estimated concentrations in the Great Miami River
			livestock (grazing on crops irrigated with water from Great Miami River)	ingestion	beef and milk	estimated concentrations in the Great Miami River
		~~Residential~~ *Household* User	surface water	inhalation ingestion dermal contact	particulates, volatiles and gases	estimated concentrations in the Great Miami River
Without Federal Ownership	*Future Off-Property Farmer (adult and child), homegrown produce off-property, grazing off-property, groundwater off-property*		*air*	*inhalation*	*particulates, volatiles, and gases*	*maximum estimated off-property future concentrations derived from air modeling*
			plants (homegrown produce)	*ingestion*	*fruits and vegetables*	*maximum estimated off-property future concentrations derived from air modeling and groundwater modeling*
			livestock (grazing at property boundary)	*ingestion*	*milk and beef*	*maximum estimated off-property future concentrations derived from air modeling and groundwater modeling*
			groundwater	*ingestion* *dermal contact* *inhalation of volatiles released during household use*		*modeled groundwater concentrations at fenceline when concentration is greatest*

TABLE B.2-2
(Continued)

Future Land Use	Receptor	Direct Contact Medium	Route of Exposure		Exposure Point Concentration
Without Federal Ownership (Continued)	Future On-Property Resident Farmer (adult and child), homegrown produce on-subunit, livestock grazing on-property, groundwater on-property; will include RME and CT estimates	air	inhalation	particulates, volatiles, gases, and indoor radon	maximum estimated on-subunit future concentrations derived from air modeling; radon estimated from soil radium concentrations
		plants (homegrown produce)	ingestion	fruits and vegetables	maximum estimated on-subunit future concentrations derived from air modeling and groundwater modeling of the Great Miami Aquifer.
		livestock (grazing on property)	ingestion	milk and beef	maximum estimated on-subunit future concentrations derived from air modeling and groundwater modeling of Great Miami Aquifer
		groundwater	inhalation ingestion dermal contact	particulates, volatiles, and gases	groundwater concentration in Great Miami Aquifer underlying subunit at time when concentration is greatest
	Future On-Property Resident Farmer (adult and child), homegrown produce on-property, livestock grazing on-subunit, groundwater on property; will include RME and CT estimates (continued)	surface soil	incidental ingestion dermal contact external radiation		surface soil within subunit
	Future Homebuilder	waste material/subsurface soil	external radiation incidental ingestion dermal contact		subsurface soil within subunit
		air	inhalation	particulates, volatiles, and gases	air concentrations at construction site based on modeling

5894

TABLE B.2-2
(Continued)

Future Land Use	Receptor	Direct Contact Medium	Route of Exposure		Exposure Point Concentration
Without Federal Ownership (Continued)	Future Perched Groundwater User, homegrown produce on-subunit, groundwater on-property	air	inhalation	particulates, volatiles, gases, and indoor radon	maximum estimated on-subunit future concentrations derived from air modeling; radon estimated from soil radium concentrations
		plants (home grown produce)	ingestion	fruits and vegetables	maximum estimated on-subunit future concentrations derived from air modeling and groundwater modeling of the Great Miami Aquifer
		livestock (grazing on property)	ingestion	milk and beef	maximum estimated on-subunit future concentrations derived from air modeling and groundwater modeling of the Great Miami Aquifer
		perched groundwater directly underlying subunit	ingestion dermal contact inhalation of volatiles released during house use		perched groundwater concentrations directly underlying the subunit at time when concentrations are greatest
		surface soil	incidental ingestion dermal contact external radiation		surface soil within subunit

USEPA Comment No. B-10, *49*

000162

5894
FEMP-OU02-6 FINAL
September 6, 1994

- "The Risk Assessment Guidance for Superfund: Human Health Evaluation Manual, Volume I, Part A, Interim Final" (EPA 1989a).

No. 48

- "Statistical Methods for Evaluating the Attainment of Cleanup Standards, Volume I and Volume 3 (Draft)" (EPA 1989~~e~~ *d* and 1990a).
- "Statistical Methods for Environmental Pollution Monitoring" (Gilbert 1987).
- "Statistical Analysis of Ground-Water Monitoring Data at RCRA Facilities, Interim Final Guidance" (EPA 1989~~d~~ *e*).
- "EPA comments (December 1991 and March 1992) on the statistical methods used in the October 1991 Draft Risk Assessment Work Plan Addendum (Saric 1991 and 1992).

B.2.3.1 Data Sources

Below is a discussion of data sources used in this baseline risk assessment. These data sources included subunit data generated during on-site field sampling programs and background data generated from samples collected 3 to 5 miles away from the FEMP site.

B.2.3.1.1 Subunit Data

In accordance with the Risk Assessment Work Plan Addendum, data generated in RI/FS field sampling programs are given first consideration in risk assessments. These data are the most current and most reliable based on RI/FS quality assurance/quality control (QA/QC) practices. For Operable Unit 2, two RI/FS field sampling programs were completed. The first (Phase I) was completed in the Summer 1992 and the second (Phase II) was completed in Summer 1993. Analytical

No. B-14 data from both of these efforts are utilized in this risk assessment. Because ~~D~~data from the Characterization Investigation Study (CIS) ~~and Environmental Survey (ES) investigations~~ were not validated, data from these investigations were not used for this risk assessment, but were used to guide sampling activities for the Phase I and Phase II RI/FS (see Section 2.0 of this report).

B.2.3.1.2 Background Data

The site-specific background data set for soil consisted of a series of soil samples collected approximately three to five miles from the FEMP site. Background concentrations in surface and subsurface soil were determined based on direct analysis of regional soils at three depths (i.e., 0 to 6 inches, 36 to 42 inches, and 48 to 54 inches), the assumption of secular equilibrium in the radioactive decay process, and the recognition that certain organic compounds and radionuclides (i.e., technetium-99 and the isotopes of plutonium) do not occur naturally.

specified set of typical measurement parameters. These parameters include the sample size, counting time, counting efficiency, self-absorption and decay corrections, chemical yield, and other factors involved in determining activity concentrations (EPA 1980). For the purposes of evaluating data in the RI/FS, the term "SQL" will be used for both chemicals and radionuclides.

Non-detected results (if present in the data set) must be considered with positively detected background results for determining the descriptive statistics for background data sets. Although EPA's Risk Assessment Guidance for Superfund Part A, Human Health Evaluation Manual allows for best professional judgement in determining the most appropriate assignment of values for non-detected results (EPA 1989a), EPA Region V has requested that a value of one-half the SQL be assigned for each non-detected result. Therefore, statistical treatment of background data for risk assessments will conform with the methodology requested by EPA Region V.

A value of the SQL was sought for each non-detected result. If SQLs were not obtainable for chemical analytical results, the contract-required quantitation limit (CRQL) was used as the value of the SQL. The uncertainty introduced by this assumption was evaluated, since the CRQL may have overestimated or underestimated the actual SQL (EPA 1989a).

B.2.3.4 Evaluation of Background

B.2.3.4.1 Determination of Background Distribution

Each background data set was evaluated to determine the probability distribution (normal, lognormal, or undefined) that best describes the data set. Two methods were used to determine the distribution type.

The first method employed to determine the appropriate distribution *was* ~~T~~ the Kolmogorov-Smirnov
No. 48 test with Lilliefors adjustment (Lilliefors 1967). This method is recommended in EPA's Statistical Analysis of Ground Water Monitoring Data at RCRA Facilities. The test was performed on the untransformed data to test the normality assumption and on the log-transformed data to test the assumption of lognormality. If the test provided sufficient evidence to reject both normality or lognormality assumptions then a second method was employed.

If the above criteria are not met then the non-parametric Wilcoxon Rank Sum procedure was applied because it is a distribution-free technique and does not rely on distributional assumptions. Both of these procedures can be found in any general statistical text (e.g. Gilbert, 1987).

If specific data points stood out as suspected outliers in the background datasets, a quantitative test was performed. Since this test, as with most quantitative tests for outliers, assumes an approximate normal distribution, attempts were made to transform datasets that are not normally distributed to approximate a normal distribution before the test is performed.

The method used for identifying outliers consisted of the following steps:

1. Calculate the mean, $\bar{x}$, and the standard deviation, s, of the data including all measurements.

2. Compute the statistic, T_n, given by

$$T_n = \frac{x_n - \bar{x}}{s} \qquad \text{(B.2-1)}$$

for each value suspected of being on outlier.

No. 48

3. Compare the statistic T_n to the critical value for the given sample size, n, from Table 4-2 in the Risk Assessment Work Plan Addendum (***DOE*** 1992a).

4. If the statistic T_n for the suspected value exceeds the critical value from Table 4-2 in the Risk Assessment Work Plan Addendum (***DOE*** 1992a), this is evidence that the suspected value, x_n, is a statistical outlier.

Since the presence of outliers can severely affect the determination of descriptive statistics and statistical comparisons, any potential or suspect outliers in the background data sets were investigated. The investigation included, if possible, a review of the raw data associated with the determination of the background concentration value.

During the determination of background concentration values, nine values failed the outliers test and were removed from the groundwater data before determination of the concentration terms because they were highly suspect and assumed to be true outliers. The values were:

Calcium:	1.03 J and 1.3 J,	UCL = 100.7
Chromium:	0.56 J,	UCL = 0.01
Magnesium:	0.5 J and 0.581,	UCL = 28.3
Nickel:	0.78 J,	UCL = 0.012
Potassium:	13.4 and 13.5,	UCL = 2.004
Selenium:	0.06 UJ,	UCL = 0.002

("J" indicates an estimated value below the method detection limit, "UJ" indicates that the value was below an estimated detection limit of the value shown.)

No. B-127 Tables B.2-2A through B.2-2D provide the background and 95th percentile concentration values.

B.2.3.5 ~~B.2.3.6~~ Determination of Concentration Term

The subunit concentration term is assumed to be the 95 percent UCL of the mean. If the distribution for an analyte was determined to be either normal or lognormal the appropriate equation was used to calculate the 95 percent UCL. Section B.2.3.4.1 presents the methods used to determine which distribution best fits the data and therefore which equation should be used to estimate the concentration term. The UCL equations for both a normal distribution and lognormal distribution are presented below.

No. B-11

No. 48 The UCL for a normal distribution (Gilbert 1987):

$$UCL_{(.95)} = \bar{x} + t_{(.95,n-1)} \times \frac{S}{\sqrt{n-1}} \qquad \text{(B.2-5)}$$

where

n = number of samples
$\bar{x}$ = sample mean concentration
$t_{(.95,n-1)}$ = percentage point from the t distribution
s = sample standard deviation

$$= \sqrt{\frac{1}{n-1}\sum_{i=1}^{n}(x_i-\bar{x})^2}$$

B.2.4A ~~B.2.3.5~~ Identification of Constituents of Potential Concern (CPCs)

B.2.4A.1 ~~B.2.3.5.1~~ Comparison to Background

The first step in selecting CPCs is to compare the concentration term to background concentrations. To conduct the comparison between the site-related measurements and the background data for a constituent, two tests were used in sequence: (1) a "location" test (Student's t-test or Wilcoxon Rank Sum test) and (2) followed by the "95th Percentile Test" (see below for details). If either of the test results rejects the null hypothesis that the site data is equal to background (i.e., the distribution of measurements at the site appears to be shifted to the right (to higher measurements) of the background distribution), the constituent is considered to be a possible CPC and is submitted to toxicological screening. The constituent is not included as a possible CPC only if both test results indicate that there was not a "significant difference" between the two distributions. For cases where the location tests could not be performed due to small sample sizes or large portion of nondetects and the 95th Percentile Test suggests that the site-related data are not different from the background data, professional judgement by risk assessors was used to make the final determination.

The "location" test can be either the t-test, a parametric statistical method, or the Wilcoxon Rank Sum (WRS) test (or the Mann-Whitney U-test, a direct corollary to the WRS) which is the counterpart of the t-test in a nonparametric approach. The t-test was used to compare the mean of the site-related data with the mean of the background data. The WRS test compares two distributions of rank ordered data (equivalent proportions of ranks would indicate similar distributions). The criteria for conducting the t-test are presented in Figure B.2-4. For cases in which the t-test cannot be applied to the data, the WRS test was conducted.

The 95th Percentile Test determines if any sample measurements for a given constituent exceed the upper 95th percentile for the background distribution. If so, the test indicates that the data contains at least one relatively high concentration and the constituent should be considered as a CPC. The 95th percentile for the background distribution can be computed as follows:

No. B-11, For background data with a normal distribution (Gilbert 1987):

No. 48

$$P_{95} = \bar{x} + z_{0.95} * s \qquad \text{(B.2-2)}$$

TABLE B.2.2.F

CONSTITUENTS ELIMINATED BASED INITIAL TOXICOLOGICAL SCREENING[a]

Surface Soil	Subsurface Soil	Surface Water	Sediment
		ACTIVE FLYASH PILE	
Calcium[c]	Aluminum[c]	Calcium[c]	Calcium[c]
Iron[c]	Iron[c]	Iron[c]	Magnesium[c]
Magnesium[c]	Sodium[c]	Magnesium[c]	Sodium[c]
Potassium[c]	2-Chlorophenol[b]	Manganese[c]	Ammonia[e]
Sodium[c]	4-Chloro-3-methylphenol[b]	Potassium[c]	Chloride[e]
	4-Nitrophenol[b]	Selenium[c]	Fluoride[e]
	Di-n-octylphthalate[b]	Silicon[d]	Nitrate[e]
	1,1-Dichloroethane[b]	Sodium[c]	Phosphorous[e]
	1,1-Dichloroethene[b]	Alkalinity[e]	Sulfate[e]
	1,2-Dichlrorethane[b]	Ammonia[e]	Total Organic
	2-Hexanone[b]	Chloride[e]	Nitrogen[e]
	Benzene[b]	Fluoride[e]	
	Bromomethane[b]	Nitrate[e]	
	Chloroethane[b]	Phenols[e]	
	Chloroform[b]	Phosphorous[e]	
	Vinyl chloride[b]	Sulfate[e]	
	Xylenes, total[b]	Sulfide[e]	
		Total Kjeldahl Nitrogen[e]	
		Total Organic	
		Carbon[e]	
		Total Organic	
		Halides[e]	
		Total Organic	
		Nitrogen[e]	
		Total Phosphorous[e]	
		SOUTH FIELD	
Aluminum[c]	Sodium[c]	Aluminum[c]	Aluminum[c]
Calcium[c]	Total Organic Carbon[e]	Calcium[c]	Calcium[c]
Iron[c]		Magnesium[c]	Iron[c]
Magnesium[c]		Potassium[c]	Magnesium[c]
Potassium[c]		Silicon[c]	Potassium[c]
Sodium[c]		Sodium[c]	Sodium[c]
		Alkalinity[e]	
		Chloride[e]	

See footnotes at end of table

TABLE B.2.2.F
(Continued)

Surface Soil	Subsurface Soil	Surface Water	Sediment
		SOUTH FIELD (Continued)	
		Fluoride[e]	
		Phosphorous[e]	
		Sulfate[e]	
		Total Kjeldahl Nitrogen[e]	
		Total Organic Carbon[e]	
		Total Organic Nitrogen[e]	
		Total Phosphorous[e]	
		INACTIVE FLYASH PILE	
Calcium[c]	Sodium[c]	Aluminum[c]	Aluminum[c]
Potassium[c]	Total Organic Carbon[e]	Calcium[c]	Calcium[c]
Sodium[c]		Iron[c]	Iron[c]
Fluorene[c]		Magnesium[c]	Magnesium[c]
		Potassium[c]	Potassium[c]
		Sodium[c]	Silicon[d]
		Alkalinity[e]	Sodium[c]
		Ammonia[e]	Alkalinity[e]
		Chloride[e]	Ammonia[e]
		Fluoride[e]	Chloride[e]
		Nitrate[e]	Fluoride[e]
		Phosphorous[e]	Nitrate[e]
		Sulfate[e]	Phosphorous[e]
		Total Kjeldahl Nitrogen[e]	Sulfate[e]
		Total Organic Carbon[e]	Total Kjeldahl Nitrogen[e]
		Total Organic Halides[e]	Total Organic Carbon[e]
		Total Organic Nitrogen[e]	Total Organic Halides[e]
		Total Phosphorous[e]	Total Organic Nitrogen[e]
			Total Phosphorous[e]
		SOLID WASTE LANDFILL	
Aluminum[c]	Aluminum[c]	Silicon[d]	Calcium[c]
Calcium[c]	Potassium[c]	~~Di-n-butyl phthalate~~	Magnesium[c]
Iron[c]	Sodium[c]	~~Diethyl phthalate~~	Sodium[c]
Magnesium[c]	Acenaphthylene[b]	~~Bis(2-Ethylhexyl)phthalate~~	

See footnotes at end of table

TABLE B.2.2.F
(Continued)

Surface Soil	Subsurface Soil	Surface Water	Sediment
	SOLID WASTE LANDFILL (Continued)		
Potassium[c]	Carbon Disulfide[b]	Alkglinitz[e]	
Silicon[d]	Dichlorodifluoromethane[b]	Chloride[e]	
Sodium[c]	Pyridine[b]	Fluoride[e]	
	Styrene[b]	Nitrate[c]	
	Trichlorofluoromethane[b]	Phosphorous[e]	
	Vinyl chloride[b]	Sulfate[e]	
	Sulfide[e]	Total Kjeldahl Nitrogen[e]	
	1,2,3,4,6,7,8-heptachlorodibenzofuran[b]		
	1,2,3,5,6,7,8-heptachlorodibenzo-p-dioxin[b]		
	Endosulfan sulfate		
	Endrin aldehyde[b]		
	Total Organic Carbon[e]	Total Organic Carbon[e]	
	Endosulfan II[b]	Total Organic Halides[e]	
		Total Organic Nitrogen[e]	
		Total Phosphorous[e]	
	LIME SLUDGE PONDS[f]		
Aluminum[c]	Aluminum[c]		
Calcium[c]	Iron[c]		
Iron[c]	Potassium[c]		
Magnesium[c]	Silicon[d]		
Potassium[c]	1,1-Dichloroethane[b]		
Silicon[d]	2-Butanone[b]		
Sodium[c]	Idomethane[b]		

[a]Constituents were eliminated based on the first four toxicological screening criteria (i.e., detected once in one medium; macronutrient/micronutrient that is nontoxic; ubiquitous in nature; and nonspecific class of compounds).
[b]Constituent was removed because it was detected only once in one medium (not detected in any other media).
[c]Constituent was removed because it is an essential macronutrient and macronutrient that is nontoxic at the levels identified (e.g., Al, Na, K, Mg, Ca, Fe).
[d]Constituent was removed because it is ubiquitous in nature and considered to become nontoxic (e.g., Al, Si, Cl).
[e]Constituent was removed because it is from a nonspecific class of chemical compounds (e.g., TOC, TPH, PAH, CH, and general aqueous chemicals).
[f]Constituents in the subsurface soil column are from waste material in the Lime Sludge Ponds.

Comment Response #6 (USEPA), *No. 47*

Residential Water for Chemicals

Carcinogenic

Risk-based PRG $= 1.7 \times 10^{-4}/2(SF_o) + 7.5(SF_i)$ (B.2-10a)

(mg/L; target risk $= 10^{-7}$)

SF_o = oral slope factor $(mg/kg\text{-}day)^{-1}$

SF_i = inhalation slope factor $(mg/kg\text{-}day)^{-1}$

Noncarcinogenic

Risk-based PRG $= 73/[7.5/RfD_i + 2/RfD_o]$ (B.2-10b)

(mg/L; target hazard = 0.1)

RfD_o = oral chronic reference dose (mg/kg-day)

RfD_i = inhalation chronic reference dose (mg/kg-day)

Residential Water for Radionuclides

Carcinogenic

Risk-based PRG $= 9.5 \times 10^{-11}/2(SF_o) + 7.5(SF_i)$ (B.2-11)

(pCi/g; target risk $= 10^{-7}$)

SF_o = oral slope factor (risk/pCi)

SF_i = inhalation slope factor (risk/pCi)

It is important to note that although the purpose of these equations are to develop risk-based concentrations to be used as preliminary remediation goals (PRGs), their use in this baseline risk assessment was to develop screening levels for which concentration terms were compared.

No. 48 As a point of departure from EPA RAGs Part B (*EPA* 1991d) and the National Oil and Hazardous Substances Contingency Plan (EPA 1990f) which recommends that the risk-based concentrations correspond to a risk level of 1.0×10^{-6} for carcinogens and a hazard index (HI) of 1.0 for noncarcinogens. Risk based concentrations for Operable Unit 2 screening were derived to correspond

TABLE B.2-2H

TAP WATER RISK-BASED SCREENING LEVELS DEVELOPED FROM EPA RAGS, PART B[a]

Constituent	Dose-Response				Risk-based PRGs based on EPA RAGs Part B[b c]		
	Oral CSF[d] (mg/Kg/day)$^{-1}$	Inhalation CSF[b] (mg/Kg/day)$^{-1}$	Oral RfD (mg/Kg/day)	Inhalation[b] RfD (mg/Kg/day)	Carcinogens (TR[e f] = 10^{-7}) (mg/L;pCi/L)	Toxicants (HI[d,f e,g] = 0.1) (mg/L;pCi/L)	Screening Value (mg/L;pCi/L)
aluminum					ND	ND	ND
antimony			4.0E-04		ND	1.46E-03	1.46E-03
arsenic	1.75E+00	15.1	3.0E-04		1.46E-07	1.09E-03	1.46E-07
barium			7.0E-02		ND	2.56E-01	2.56E-01
beryllium	4.3E+00	8.4			2.37E-07	ND	2.37E-07
boron			9.0E-02	5.71E-03	ND	3.29E-01	3.29E-01
cadmium		6.3	1.0E-03	6.0E-05	3.60E-07	3.65E-03	3.60E-07
calcium					ND	ND	ND
chromium vi		42	5.0E-03		5.40E-08	1.82E-02	5.40E-08
cobalt			6.0E-02	3.00E-07	ND	2.19E-01	2.19E-01
copper			3.7E-02		ND	1.35E-01	1.35E-01
cyanide			2.0E-02		ND	7.30E-02	7.30E-02
iron					ND	ND	ND
lead					ND	ND	ND
magnesium			9.7E+00		ND	3.54E+01	3.54E+01
manganese			1.4E-01	0.000114	ND	5.11E-01	5.11E-01
mercury			3.0E-04	0.000086	ND	1.10E-03	1.10E-03

See footnotes at end of table

FER\CRU2RI\VDR\APP-B\TAB2-2G\August 30, 1994 9:58am

TABLE B.2-2H
(Continued)

Constituent	Dose-Response				Risk-based PRGs based on EPA RAGs Part B[b c]		
	Oral CSF[d] $(mg/Kg/day)^{-1}$	Inhalation CSF[b] $(mg/Kg/day)^{-1}$	Oral RfD (mg/Kg/day)	Inhalation[b] RfD (mg/Kg/day)	Carcinogens ($TR^{e,f} = 10^{-7}$) (mg/L;pCi/L)	Toxicants ($HI^{d,f,e,g} = 0.1$) (mg/L;pCi/L)	Screening Value (mg/L;pCi/L)
molybdenum			5.0E-03		ND	1.82E-02	1.82E-02
nickel		0.84	2.0E-02		2.70E-06	7.30E-02	2.70E-06
potassium					ND	ND	ND
selenium			5.0E-03		ND	1.83E-02	1.83E-02
silicon					ND	ND	ND
silver			5.0E-03		ND	1.82E-02	1.82E-02
sodium					ND	ND	ND
thallium			7.0E-05		ND	2.55E-04	2.55E-04
thorium-total					ND	ND	ND
uranium-total			3.0E-03		ND	1.09E-02	1.09E-02
vanadium			7.0E-03		ND	2.56E-02	2.56E-02
zinc			3.0E-01		ND	1.09E+00	1.09E+00
1,1,1-trichloroethane				0.286	ND	2.78E-01	2.78E-01
1,1,2,2-tetrachloroethane	2.0E-01	0.203			8.84E-06	ND	8.84E-06
1,1,2-trichloroethane	5.7E-02	0.057	4.0E-03		3.14E-05	1.46E-02	3.14E-05
1,1,2-trichlorotrifluoroethane					ND	ND	ND
1,1-dichloroethane			1.0E-01	0.143	ND	1.01E-01	1.01E-01
1,1-dichloroethene	6.1E-01	0.18	9.0E-03		6.61E-06	3.28E-02	6.61E-06
1,2,4-trichlorobenzene			1.0E-02	0.00257	ND	2.34E-03	2.34E-03

See footnotes at end of table

FER\CRU2RI\VDR\APP-B\TAB2-2G\August 30, 1994 9:58am

TABLE B.2-2H
(Continued)

Constituent	Dose-Response				Risk-based PRGs based on EPA RAGs Part B[b c]		
	Oral CSF[d] $(mg/Kg/day)^{-1}$	Inhalation CSF[b] $(mg/Kg/day)^{-1}$	Oral RfD (mg/Kg/day)	Inhalation[b] RfD (mg/Kg/day)	Carcinogens ($TR^{e\,f} = 10^{-7}$) (mg/L;pCi/L)	Toxicants ($HI^{d,f\,e,g}$ = 0.1) (mg/L;pCi/L)	Screening Value (mg/L;pCi/L)
1,2-dichloroethane	9.1E-02	0.091			1.97E-05	ND	1.97E-05
1,2-dichloroethene			9.0E-03		ND	3.29E-02	3.29E-02
1,2-dichloropropane		0.068		0.00114	3.33E-05	1.11E-03	3.33E-05
1,2-diethylbenzene					ND	ND	ND
1,4-dichlorobenzene	2.4E-03			0.229	3.54E-04	2.23E-01	3.54E-04
1,4-dioxane					ND	ND	ND
2,4,6-trichlorophenol	1.1E-02	0.011			1.63E-04	ND	1.63E-04
2,4-dichlorophenol			3.0E-03		ND	1.09E-02	1.09E-02
2,4-dinitrophenol			2.0E-03		ND	7.30E-03	7.30E-03
2,4-dinitrotoluene	6.8E-01		2.0E-03		1.25E-05	7.30E-03	1.25E-05
2-butanone			6.0E-01	0.286	ND	2.47E-01	2.47E-01
2,6-dinitrotoluene	6.8E-01		1.0E-03		1.25E-05	3.65E-03	1.25E-05
2-chlorophenol			5.0E-03		ND	1.83E-02	1.83E-02
2-hexanone			4.0E-2		ND	1.46E-01	1.46E-01
2-methylnaphthalene					ND	ND	ND
2-nitroanaline				0.000057	ND	5.56E-05	5.56E-05
2-nitrophenol					ND	ND	ND
3,3-dichlorobenzidene	4.5E-01				1.89E-05	ND	1.89E-05
3-chloropropene					ND	ND	ND

See footnotes at end of table

FER\CRU2RI\VDR\APP-B\TAB2-2G\August 30, 1994 9:58am

000174

5894

TABLE B.2-2H
(Continued)

Constituent	Dose-Response				Risk-based PRGs based on EPA RAGs Part B[b c]		
	Oral CSF[d] $(mg/Kg/day)^{-1}$	Inhalation CSF[b] $(mg/Kg/day)^{-1}$	Oral RfD (mg/Kg/day)	Inhalation[b] RfD (mg/Kg/day)	Carcinogens ($TR^{e f} = 10^{-7}$) (mg/L;pCi/L)	Toxicants ($HI^{d,f\ e,g} = 0.1$) (mg/L;pCi/L)	Screening Value (mg/L;pCi/L)
3-nitroanaline			3.0E-03		ND	1.10E-02	1.10E-02
4-chloro-3-methylphenol					ND	ND	ND
4-methyl-2-pentanone			5.0E-02	0.0229	ND	1.99E-02	1.99E-02
4-methylphenol	4.0E+00		5.0E-03		2.12E-06	1.82E-02	2.12E-06
4-nitrophenol				0.06	ND	5.84E-02	5.84E-02
acetone			1.0E-01		ND	3.65E-01	3.65E-01
acetonitrile			6.0E-03	0.05	ND	1.51E-02	1.51E-02
acrylonitrile	5.4E-01	0.238		0.000571	5.93E-06	5.56E-04	5.93E-06
benzene	2.9E-02	0.0292			6.14E-05	ND	6.14E-05
benzoic acid			4.0E+00		ND	1.46E+01	1.46E+01
butyl benzyl phthalate			2.0E-01		ND	7.30E-01	7.30E-01
bis(2-ethylhexyl)phthalate	1.4E-02		2.0E-02		6.07E-04	7.30E-02	6.07E-04
bromodichloromethane	6.2E-02		2.0E-02		1.37E-04	7.30E-02	1.37E-04
bromoform	7.9E-03	0.0039	2.0E-02		3.77E-04	7.30E-02	3.77E-04
bromomethane			2.0E-03	0.00143	ND	1.09E-03	1.09E-03
carbazole	2.0E-02				4.25E-04	ND	4.25E-04
carbon disulfide			1.0E-01	0.00286	ND	2.76E-03	2.76E-03
carbon tetrachloride	1.31E-01	0.053	7.0E-04		2.58E-05	2.56E-03	2.58E-05
chlorobenzene			2.0E-02	0.00571	ND	5.16E-03	5.16E-03

See footnotes at end of table

FER\CRU2RI\VDR\APP-B\TAB2-2G\August 30, 1994 9:58am

TABLE B.2-2H
(Continued)

Constituent	Dose-Response				Risk-based PRGs based on EPA RAGs Part B[b c]		
	Oral CSF[d] $(mg/Kg/day)^{-1}$	Inhalation CSF[b] $(mg/Kg/day)^{-1}$	Oral RfD (mg/Kg/day)	Inhalation[b] RfD (mg/Kg/day)	Carcinogens ($TR^{e\,f} = 10^{-7}$) (mg/L;pCi/L)	Toxicants ($HI^{d,f\,e,g}$ = 0.1) (mg/L;pCi/L)	Screening Value (mg/L;pCi/L)
chloroform	6.1E-03	0.0805	1.0E-02		2.76E-05	3.65E-02	2.76E-05
chloromethane	1.3E-02	0.0063			2.32E-04	ND	2.32E-04
chrysene	7.3E-03	0.0061			2.82E-04	ND	2.82E-04
dibromochloromethane	8.4E-02		2.0E-02		1.01E-04	7.30E-02	1.01E-04
dichlorofluoromethane				14.3	ND	1.39E+01	1.39E+01
diethyl phthalate			8.0E-01		ND	2.92E+00	2.92E+00
dimethyl phthalate			1.0E+00		ND	3.65E+00	3.65E+00
di-n-butyl phthalate			1.0E-01		ND	3.65E-01	3.65E-01
di-n-octyl phthalate			2.0E-02		ND	7.30E-02	7.30E-02
ethylbenzene			1.0E-01	0.286	ND	1.58E-01	1.58E-01
hexachlorobenzene	1.6E+00	1.6	8.0E-04		1.12E-06	2.92E-03	1.12E-06
hexachloroethane	1.4E-02	0.014	1.0E-03		1.28E-04	3.65E-03	1.28E-04
hexane			6.0E-02		ND	2.19E-01	2.19E-01
iodomethane					ND	ND	ND
isophorone	4.1E-03		2.0E+00		2.07E-03	7.30E+00	2.07E-03
methylene chloride	7.5E-03	0.00165	6.1E-02	0.857	6.21E-04	1.76E-01	6.21E-04
naphthalene			4.0E-02		ND	1.46E-01	1.46E-01
n-nitrosodiphenylamine	4.9E-03				1.73E-03	ND	1.73E-03
n-nitrosodipropylamine	7.0E+00				1.21E-06	ND	1.21E-06

See footnotes at end of table

FER\CRU2RI\VDR\APP-B\TAB2-2G\August 30, 1994 9:58am

000176

5894

TABLE B.2-2H
(Continued)

Constituent	Dose-Response				Risk-based PRGs based on EPA RAGs Part B[b c]		
	Oral CSF[d] (mg/Kg/day)$^{-1}$	Inhalation CSF[b] (mg/Kg/day)$^{-1}$	Oral RfD (mg/Kg/day)	Inhalation[b] RfD (mg/Kg/day)	Carcinogens (TR[e f] = 10^{-7}) (mg/L;pCi/L)	Toxicants (HI[d,f e,g] = 0.1) (mg/L;pCi/L)	Screening Value (mg/L;pCi/L)
pentachlorophenol	1.2E-01		3.0E-02		7.08E-05	1.10E-01	7.08E-05
phenol			6.0E-01		ND	2.19E+00	2.19E+00
pyrene			0.003		ND	1.10E-02	1.10E-02
pyridine			0.01		ND	3.65E-02	3.65E-02
styrene	3.0E-02		2.0E-01	0.286	2.83E-04	2.02E-01	2.83E-04
tetrachloroethene	5.2E-02	0.002	1.0E-02		1.43E-04	3.65E-02	1.43E-04
tetrachloroethylene	5.2E-02	0.002	1.0E-02		1.43E-04	3.65E-02	1.43E-04
toluene			2.0E-01	0.114	ND	9.63E-02	9.63E-02
tributyl phosphate			5.0E-03		ND	1.83E-02	1.83E-02
trichloroethene	1.1E-02	0.006			2.54E-04	ND	2.54E-04
trichlorofluoromethane			3.0E-01	0.2	ND	1.65E-01	1.65E-01
vinyl acetate			1.0E+00	0.0571	ND	5.47E-02	5.47E-02
vinyl chloride	1.9E+00	0.3			2.81E-06	ND	2.81E-06
xylenes, total			2.0E+00	0.0857	ND	8.25E-02	8.25E-02
acenaphthene			6.0E-02		ND	2.19E-01	2.19E-01
acenaphthylene			6.0E-02		ND	2.19E-01	2.19E-01
anthracene			3.0E-01		ND	1.10E+00	1.10E+00
benzo(g,h,i)perylene					ND	ND	ND
dibenzofuran			4.0E-03		ND	1.46E-02	1.46E-02

See footnotes at end of table

FER\CRU2RI\VDR\APP-B\TAB2-2G\August 30, 1994 9:58am

TABLE B.2-2H
(Continued)

Constituent	Dose-Response				Risk-based PRGs based on EPA RAGs Part B[b c]		
	Oral CSF[d] (mg/Kg/day)$^{-1}$	Inhalation CSF[b] (mg/Kg/day)$^{-1}$	Oral RfD (mg/Kg/day)	Inhalation[b] RfD (mg/Kg/day)	Carcinogens (TR[e f] = 10^{-7}) (mg/L;pCi/L)	Toxicants (HI[d,f e,g] = 0.1) (mg/L;pCi/L)	Screening Value (mg/L;pCi/L)
fluoranthene			4.0E-02		ND	1.46E-01	1.46E-01
fluorene			4.0E-02		ND	1.46E-01	1.46E-01
phenanthrene					ND	ND	ND
benzo(a)anthracene	7.3E-01	0.61			2.82E-06	ND	2.82E-06
benzo(a)pyrene	7.3E+00	6.1			2.82E-07	ND	2.82E-07
benzo(b)fluoranthene	7.3E-01	0.61			2.82E-06	ND	2.82E-06
benzo(k)fluoranthene	7.3E-02	0.061			2.82E-05	ND	2.82E-05
chrysene	7.3E-03	0.0061			2.82E-04	ND	2.82E-04
dibenzo(a,h)anthracene	7.3E+00	6.1			2.82E-07	ND	2.82E-07
indeno(1,2,3-cd)pyrene	7.3E-01	0.61			2.82E-06	ND	2.82E-06
4,4-ddd	2.4E-01				3.54E-05	ND	3.54E-05
4,4-dde	3.4E-01				2.50E-05	ND	2.50E-05
4,4-ddt	3.4E-01	0.34	5.0E-04		5.26E-06	1.83E-03	5.26E-06
aldrin	1.7E+01	17	3.0E-05		1.05E-07	1.10E-04	1.05E-07
alpha bhc	6.3E+00	6.3			2.84E-07	ND	2.84E-07
aroclor-1248	7.7E+00				1.10E-06	ND	1.10E-06
aroclor-1254	7.7E+00				1.10E-06	ND	1.10E-06
aroclor-1260	7.7E+00				1.10E-06	ND	1.10E-06
alpha-chlorodane	1.3E+00	1.3	6.0E-05		1.38E-06	2.19E-04	1.38E-06

See footnotes at end of table

FER\CRU2RI\VDR\APP-B\TAB2-2G\August 30, 1994 9:58am

000178

5894

TABLE B.2-2H
(Continued)

Constituent	Dose-Response				Risk-based PRGs based on EPA RAGs Part B[b c]		
	Oral CSF[d] $(mg/Kg/day)^{-1}$	Inhalation CSF[b] $(mg/Kg/day)^{-1}$	Oral RfD (mg/Kg/day)	Inhalation[b] RfD (mg/Kg/day)	Carcinogens ($TR^{e\,f} = 10^{-7}$) (mg/L;pCi/L)	Toxicants ($HI^{d,f\,e,g}$ = 0.1) (mg/L;pCi/L)	Screening Value (mg/L;pCi/L)
beta bhc	1.8E+00	1.8			9.94E-07	ND	9.94E-07
gamma-chlorodane	1.3E+00	1.3	6.0E-05		1.38E-06	2.19E-04	1.38E-06
chlorodane	1.3E+00	1.3	6.0E-05		1.38E-06	2.19E-04	1.38E-06
delta bhc					ND	ND	ND
diazinon			9.0E-04		ND	3.28E-03	3.28E-03
dieldrin	1.6E+01	16	5.0E-05		1.12E-07	1.83E-04	1.12E-07
endosulfan I			6.0E-03		ND	2.19E-02	2.19E-02
endosulfan II			5.0E-05		ND	1.83E-04	1.83E-04
endrin			3.0E-04		ND	1.09E-03	1.09E-03
Endrin ketone			3.0E-04		ND	1.24E-03	1.24E-03
gamma chlorodane					ND	ND	ND
heptachlor	4.5E+00	4.5	5.0E-04		3.98E-07	1.83E-03	3.98E-07
heptachlor epoxide	9.1E+00	9.1	1.0E-05		1.97E-07	4.75E-05	1.97E-07
lindane			3.0E-04		ND	1.10E-03	1.10E-03
malathion			2.0E-02		ND	7.30E-02	7.30E-02
methoxychlor			5.0E-03		ND	1.83E-02	1.83E-02
toxaphene	1.1E+00	1.1			1.63E-06	ND	1.63E-06
heptachlorodibenzofuran	1.5E+03	1500			1.19E-09	ND	1.19E-09
heptachlorodibenzo-p-dioxin	1.5E+03	1500			1.19E-09	ND	1.19E-09

See footnotes at end of table

FER\CRU2RI\VDR\APP-B\TAB2-2G\August 30, 1994 9:58am

000179

5894

TABLE B.2-2H
(Continued)

Constituent	Dose-Response				Risk-based PRGs based on EPA RAGs Part B[b c]		
	Oral CSF[d] (mg/Kg/day)$^{-1}$	Inhalation CSF[b] (mg/Kg/day)$^{-1}$	Oral RfD (mg/Kg/day)	Inhalation[b] RfD (mg/Kg/day)	Carcinogens (TR[e f] = 10^{-7}) (mg/L;pCi/L)	Toxicants (HI[d,f e,g] = 0.1) (mg/L;pCi/L)	Screening Value (mg/L;pCi/L)
hexachlorodibenzofuran	1.5E+04	15000			1.19E-10	ND	1.19E-10
hexachlorodibenzo-p-dioxin	1.5E+04	15000			1.19E-10	ND	1.19E-10
octachlorodibenzofuran	1.5E+02	150			1.19E-08	ND	1.19E-08
octachlorodibenzo-p-dioxin	1.5E+02	150			1.19E-08	ND	1.19E-08
pentachlorodibenzofuran	7.5E+03	7500			2.39E-10	ND	2.39E-10
tetrachlorodibenzofuran	1.5E+04	15000			1.19E-10	ND	1.19E-10
tetrachlorodibenzo-p-dioxin	1.5E+05	150000			1.19E-11	ND	1.19E-11
ammonia				0.0286	ND	2.78E-02	2.78E-02
chloride					ND	ND	ND
fluoride			6.0E-02		ND	2.19E-01	2.19E-01
nitrate			1.6E+00		ND	5.84E+00	5.84E+00
nitrite			1.0E-01		ND	3.65E-01	3.65E-01
sulfate					ND	ND	ND
Cs-137+1d	2.8E-11	1.90E-11			1.70E-01	ND	1.70E-01
Np-237+1d	2.20E-10	2.90E-08			2.16E-02	ND	2.16E-02
Pb-210+2d	6.60E-10	4.00E-09			7.20E-03	ND	7.20E-03
Pu-238	2.20E-10	3.90E-08			2.16E-02	ND	2.16E-02
Pu-239/240	2.30E-10	3.80E-08			2.07E-02	ND	2.07E-02
Ra-224	3.80E-11	1.20E-09			1.25E-01	ND	1.25E-01

See footnotes at end of table

FER\CRU2RI\VDR\APP-B\TAB2-2G\August 30, 1994 9:58am

000180

5894

TABLE B.2-2H
(Continued)

Constituent	Dose-Response				Risk-based PRGs based on EPA RAGs Part B[b c]		
	Oral CSF[d] (mg/Kg/day)$^{-1}$	Inhalation CSF[b] (mg/Kg/day)$^{-1}$	Oral RfD (mg/Kg/day)	Inhalation[b] RfD (mg/Kg/day)	Carcinogens (TR[e f] = 10^{-7}) (mg/L;pCi/L)	Toxicants (HI[d,f e,g] = 0.1) (mg/L;pCi/L)	Screening Value (mg/L;pCi/L)
Ra-226+8d	7.80E-10	7.00E-09			1.76E-04	ND	1.76E-04
Ra-228+1d	1.00E-10	6.90E-10			4.75E-02	ND	4.75E-02
Ru-106	9.50E-12	4.40E-10			5.00E-01	ND	5.00E-01
Sr-90+1d	3.60E-11	6.20E-11			1.32E-01	ND	1.32E-01
Tc-99	1.30E-12	8.30E-12			3.65E+00	ND	3.65E+00
Th-228+7d	5.50E-11	7.80E-08			8.64E-02	ND	8.64E-02
Th-230	1.30E-11	2.90E-08			3.65E-01	ND	3.65E-01
Th-232+10d	1.7E-10	1.10E-07			2.79E-02	ND	2.79E-02
U-234	1.6E-11	2.60E-08			2.97E-01	ND	2.97E-01
U-235	1.6E-11	2.50E-08			2.97E-01	ND	2.97E-01
U-235/236	1.6E-11	2.50E-08			2.97E-01	ND	2.97E-01
U-236	1.5E-11	2.50E-08			3.17E-01	ND	3.17E-01
U-238+2d	2.8E-11	5.20E-08			1.70E-01	ND	1.70E-01

[a]EPA Risk Assessment Guidance, Part B (EPA 1991d).
[b]The inhalation CSFs and RfDs were calculated from unit risk values and reference concentrations taken from IRIS.
[c]Exposure time is based on 30 years.
[d]Cancer Slope Factor
[e]Reference Dose
[f]Target Risk
[g]Hazard Index

N/D - no data available, under review

Comment Nos. B-13, *No. 55*

FER\CRU2RI\TLC\APP-B\TAB2-Z\August 30, 1994 10:35am

TABLE B.2-21

CONSTITUENTS ELIMINATED BASED ON SECONDARY (EPA RAGS, PART B) TOXICOLOGICAL SCREENING[a]

Surface Soil	Subsurface Soil
ACTIVE FLYASH PILE	
Antimony	Antimony
Barium	Barium
Cadmium	Cadmium
Chromium	Chromium
Cobalt	Cobalt
Cooper	Copper
Mercury	Cyanide
Molybdenum	Mercury
Nickel	Molybdenum
Selenium	Nickel
Silver	Selenium
Vanadium	Vanadium
Zinc	Zinc
Uranium-total	Uranium-total
	Benzoic acid
	Di-n-butyl phthalate
	Di-n-octyl phthalate
	Naphthalene
	Pentachlorophenol
	Phenol
	Bis(2-Ethylhexyl)phthalate
	1,1,1-trichloroethane
	2-butanone
	2-methyl-2-pentanone
	Acetone
	Carbon disulfide
	Chloromethane
	Methylene chloride
	Toluene
SOUTH FIELD	
Antimony	Barium
Barium	Cadmium
Chromium	Chromium
Copper	Copper
Cyanide	Cyanide

TABLE B.2-2I
(Continued)

Surface Soil	Subsurface Soil
SOUTH FIELD (Continued)	
Manganese	Mercury
Molybdenum	Molybdenum
Nickel	Silver
Selenium	Vanadium
Silver	4-methylphenol
Vanadium	Acenaphthalene
Zinc	Anthracene
Uranium-total	Benzo(g,h,i)perylene
Endrin ketone	Benzo(k)fluoranthene
Acenapthene	Benzoic acid
Acenaphthylene	Carbazole
Anthracene	Chrysene
Benzoic acid	Di-n-butyl phthalate
Carbazole	Di-n-octyl phthalate
Chrysene	Dibenzo(a,h)anthracene
Dibenzofuran	Diethyl phthalate
Dimethyl phthalate	Fluoranthene
Fluoranthene	Indeno(1,2,3-cd)pyrene
Fluorene	Isophorone
Pyrene	Naphthalene
Bis(2-Ethylhexyl)phthalate	Phenol
Acetone	Pyrene
Methylene chloride	Bis(2-Ethylhexyl)phthalate
	1,1,1-trichloroethane
	2-butanone
	2-hexanone
	2-methyl-2-pentanone
	Acetone
	Carbon disulfide
	Chlorobenzene
	Chloroform
	Chloromethane
	Methylene chloride
	Styrene
	Tetrachloroethane
	Toluene
	Trichloroethane
	Vinyl acetate

TABLE B.2-2I
(Continued)

Surface Soil	Subsurface Soil
SOUTH FIELD (Continued)	
	Xylenes total
	Endrin ketone
	Alpha-chlordane
	Gamma-chlordane
INACTIVE FLYASH PILE	
Barium	Barium
Cadmium	Cadmium
Copper	Chromium
Cyanide	Copper
Magnesium	Cyanide
Molybdenum	Mercury
Selenium	Molybdenum
Silver	Silver
Vanadium	Vanadium
Uranium-total	4-methylphenol
Acenaphthalene	Acenaphthalene
Acenaphthylene	Anthracene
Anthracene	Benzo(g,h,i)perylene
Carbazole	Benzo(k)fluoranthene
Dibenzofuran	Benzoic acid
Naphthalene	Carbazole
2-butanone	Chrysene
Acetone	Di-n-butyl phthalate
Toluene	Di-n-octyl phthalate
	Dibenzo(a,h)anthracene
	Diethyl phthalate
	Fluoranthene
	Indeno(1,2,3-cd)pyrene
	Isophorone
	Naphthalene
	Phenol
	Pyrene
	Bis(2-Ethylhexyl)phthalate
	1,1,1-trichloroethane
	2-butanone
	2-hexanone
	2-methyl-2-pentanone

000183

TABLE B.2-2I
(Continued)

Surface Soil	Subsurface Soil
INACTIVE FLYASH PILE (Continued)	
	Acetone
	Carbon disulfide
	Chlorobenzene
	Chloroform
	Chloromethane
	Methylene chloride
	Styrene
	Tetrachloroethane
	Toluene
	Trichloroethane
	Vinyl acetate
	Xylenes total
	Endrin ketone
	Alpha-chlordane
	Gamma-chlordane
SOLID WASTE LANDFILL	
Barium	Barium
Chromium	Cadmium
Copper	Chromium
Molybdenum	Copper
Nickel	Cyanide
Selenium	Mercury
Silver	Molybdenum
Vanadium	Nickel
Zinc	Selenium
Uranium-total	Thallium
Acenaphthene	Vanadium
Anthracene	Uranium-total
Benzo(f)fluoranthene	2-chlorophenol
Bis(2-Ethylhexyl)phthalate	Acenaphthalene
Carbazole	Anthracene
Chrysene	Benzo(f)fluoranthene
Di-n-butyl phthalate	Chrysene
Dibenzofuran	Di-n-butyl phthalate
Fluoranthene	Di-n-octyl phthalate
Fluorene	Dibenzofuran
Pyrene	Diethyl phthalate

TABLE B.2-2I
(Continued)

Surface Soil	Subsurface Soil
SOLID WASTE LANDFILL (Continued)	
2-butanone	Fluoranthene
Acetone	Fluorene
Bromomethane	Naphthalene
Chloromethane	Phenol
Di-n-butyl phthalate	Pyrene
Bis(2-Ethylhexyl)phthalate	Bis(2-Ethylhexyl)phthalate
	Di-n-butyl phthalate
	Diethyl phthalate
	1,1-dichloroethane
	1,2-dichloroethane
	1,2-dichloroethene
	2-butanone
	2-hexanone
	4-methyl-2-pentanone
	Acetone
	Benzene
	Chlorobenzene
	Chloromethane
	Ethylbenzene
	Methylene chloride
	Tetrachloroethane
	Toluene
	Xylenes, total
	4,4'-DDD
	Endrin ketone
LIME SLUDGE PONDS	
Barium	Antimony
Cadmium	Barium
Chromium	Boron
Copper	Cadmium
Cyanide	Chromium
Mercury	Cobalt
Molybdenum	Copper
Nickel	Cyanide
Zinc	Manganese
Anthracene	Mercury
Benzo(k)fluoranthene	Molybdenum
Carbazole	Nickel

TABLE B.2-2I
(Continued)

Surface Soil	Subsurface Soil
LIME SLUDGE PONDS (Continued)	
Chrysene	Selenium
Di-n-butyl phthalate	Silver
di-n-octyl phthalate	Thallium
dibenzofuran	Vanadium
fluoranthene	Zinc
pyrene	Uranium-total
acetone	Anthracene
toluene	Benzo(a)anthracene
	Benzo(k)fluoranthene
	Chrysene
	Di-n-butyl phthalate
	Di-n-octyl phthalate
	Fluoranthene
	Pyrene
	Bis(2-Ethylhexyl)phalate
	2-hexanone
	Acetone
	Acetonitrile
	Hexane
	Methylene chloride
	Toluene

[a]Concentrations and RAGs PRGs are located in Attachment B.III [Tables B.3-1-2(a), B.3.2-2(a), B.3.3-2(a), B.3.4-2(a), and B.3.5-2(a)].

Nos. 56, 47

5894

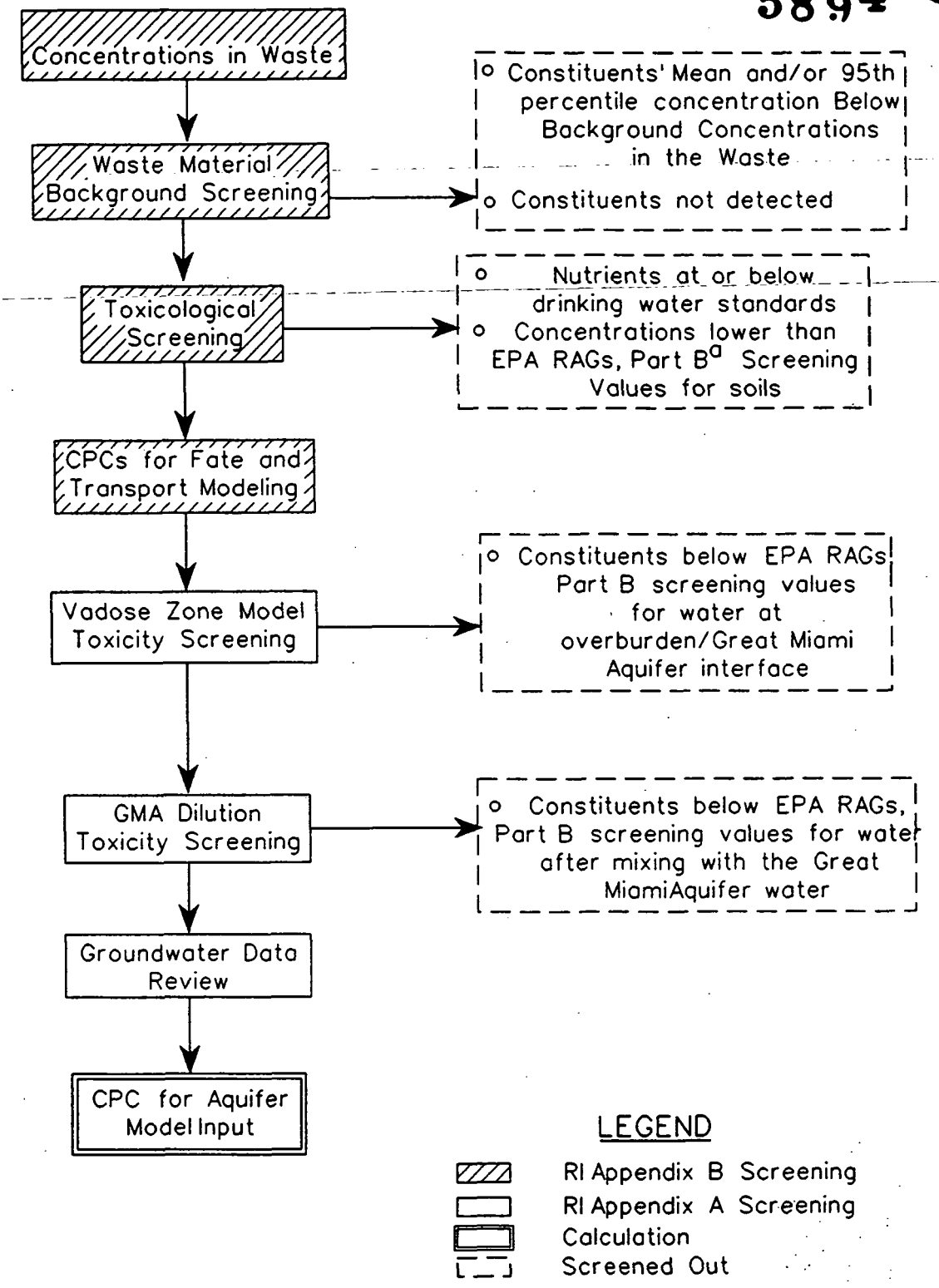

[a] EPA Risk Assessment Guidence, Part B (EPA, 1991d).

000187

figa0108.dgn

FIGURE B.2-3C
POTENTIAL CONSTITUENT OF CONCERN SCREENING DIAGRAM

Comment No. 49

TABLE B.2-3A

PARAMETERS USED TO ESTIMATE POTENTIAL EXPOSURES FOR CURRENT LAND USE RECEPTORS

Pathway Parameters	Trespassing Youth Age 7-18	Off-property Farmer Adult	Off-property Resident Child	User of Meat/Milk Products
All Pathways (unless otherwise noted)				
EF (d/yr)	52[d]	350[a]	350[a]	350[a]
ED (yr)	12[d]	70[a]	6[a]	70[a]
AT-Noncancer (d)[g]	4380[g]	25550[g]	2190[g]	25550[g]
AT-Cancer (d)[h]	25550[a,h]	25550[a,h]	25550[a,h]	25550[a,h]
BW (kg)	43[a]	70[a]	15[a]	70[a]
Inhalation of Particulates				
IR (m^3/hr)	0.83[b]	0.83[b]	0.5[q]	NA[c]
ET (hr/d)	4[d]	5.7[f]	2[a]	NA
C_a (mg/m^3) (pCi/m^3)	csv[k]	csv	csv	NA
Ingestion of Soil				
IR (mg/d)	100[a]	NA	NA	NA
FI (unitless)	0.19[i]	NA	NA	NA
C_s (mg/kg) (pCi/g)	csv	NA	NA	NA
CF - rads (g/mg)	1.0E-3	NA	NA	NA
CF - chem (kg/mg)	1.0E-6	NA	NA	NA
Ingestion of Sediment				
IR (mg/d)	100[a]	NA	NA	NA
FI (unitless)	0.06[i]	NA	NA	NA
C_s (mg/kg) (pCi/g)	csv	NA	NA	NA
CF - rads (g/mg)	1.0E-3	NA	NA	NA
CF - chem (kg/mg)	1.0E-6	NA	NA	NA

See footnotes at end of table.

TABLE B.2-3A
(Continued)

Pathway Parameters	Trespassing Youth Age 7-18	Off-property Farmer Adult	Off-property Resident Child	User of Meat/Milk Products
Dermal Contact with Soil				
SA (cm^2)	4200[a]	NA	NA	NA
AF (mg/cm^2-d)	1[j]	NA	NA	NA
ABS (unitless)	csv	NA	NA	NA
C_s (mg/kg)	csv	NA	NA	NA
CF (kg/mg)	1.0E-6	NA	NA	NA
Dermal Contact with Sediment				
SA (cm^2)	5130[j]	NA	NA	NA
AF (mg/cm^2-d)	1[a]	NA	NA	NA
ABS (unitless)	csv	NA	NA	NA
C_s (mg/kg)	csv	NA	NA	NA
CF (kg/mg)	1.0E-6	NA	NA	NA
External Radiation Exposure				
C_r (pCi/g)	csv	NA	NA	NA
ET indoors (hr/d)	NA	NA	NA	NA
ET outdoors (hr/d) sed	1[i]	NA	NA	NA
ET outdoors (hr/d) soil	3[i]	NA	NA	NA
SH indoors (unitless)	NA	NA	NA	NA
SH outdoors (unitless)	0[a]	NA	NA	NA
CF (yr/hr)	1.14E-4	NA	NA	NA
Ingestion of Surface Water				
IR (L/hr)	0.035[k,l]	NA	NA	NA
ET (hr/day)	1.0[k,l]	NA	NA	NA
C_{sw} (mg/L) (pCi/L)	csv	NA	NA	NA

See footnotes at end of table.

TABLE B.2-3A
(Continued)

Pathway Parameters	Trespassing Youth Age 7-18	Off-property Farmer Adult	Off-property Resident Child	User of Meat/Milk Products
Dermal Contact with Surface Water				
SA (cm^2)	5130[d]	NA	NA	NA
DA (mg/cm^2-d)	csv	NA	NA	NA
Ingestion of Homegrown Fruits				
IR (kg/d)	NA	0.142[g] [q]	0.204[g] [q]	NA
FI (unitless)	NA	0.30[p] [n]	0.3[p] [n]	NA
C_{iv} (mg/kg) (pCi/g)	NA	csv	csv	NA
CF-RAD (g/kg)	NA	1.0E+3	1.0E+3	NA
Ingestion of Homegrown Vegetables				
IR (kg/d)	NA	0.201[g] [q]	0.100[g] [q]	NA
FI (unitless)	NA	0.40[p] [n]	0.40[p] [n]	NA
C_{iv} (mg/kg)(pCi/kg)	NA	csv	csv	NA
CF-RAD (g/kg)	NA	1.0E+3	1.0E+3	NA
Ingestion of Home Produced Meats				
IR (meat) (kg/d)	NA	0.101[n] [l]	0.039[n] [l]	0.101[n] [l]
FI (unitless)	NA	0.75[e] [m]	0.75[e] [m]	0.75[e] [m]
C_{ia} (mg/kg)(pCi/kg)	NA	csv	csv	csv
Ingestion of Milk				
IR (L/day)	NA	0.4[s]	0.9[s]	0.4[s]
FI (unitless)	NA	0.75[o]	0.75[o]	0.75[o]
C_{im} (mg/L) (pCi/L)	NA	csv	csv	csv
Dermal Contact While Bathing				
SA (cm^2)	NA	NA	NA	NA
DA_a (mg/cm^2 - d)	NA	NA	NA	NA
Inhalation of Volatiles Released from Household Water Use				
IR (m^3/d)	NA	NA	NA	NA

See footnotes at end of table.

TABLE B.2-3A
(Continued)

Pathway Parameters	Trespassing Youth Age 7-18	Off-property Farmer Adult	Off-property Resident Child	User of Meat/Milk Products
C_w (mg/L)	NA	NA	NA	NA
K (L/m^3)	NA	NA	NA	NA

[a]Parameter values obtained from the Risk Assessment Work Plan Addendum (DOE 1992a) and revisions per comments received from EPA, unless otherwise noted.

[b]Derived by dividing the default adult human inhalation rate of 20 m^3/day (EPA 1989a, Risk Assessment Guidance for Superfund) by 24 hours/day, and rounding to two significant figures.

[c]NA = Not applicable.

[d]DOE 1993-Comment Response-SWCR: standard trespass scenario assumes 4 hr/d, 3 d/wk for months June through August=36 day plus 1 d/wk for months April, May, September, and October=16 days for a total of 52 d/yr.

[e]Assumes the worker is a groundskeeper, who works 8 hours/day, 1 day/week, 35 weeks/year on the ground of Operable Unit 2.

[f]Assumes a farmer works outdoors for 2,000 hours during the 365 days of exposure a year (5.7h/d=2000h/y/350d/y). Indoor duration is the remaining time in day.

[g]Calculated as the product of ED (years) x 365 days/year.

[h]Calculated as the product of 70 years (assumed lifetime) x 365 days/year.

[i]Assumed a trespassing child spends 4 of 16 waking hours/day on site; of the 4 hours, 3 hours are exposure from soil and 1 hour is exposure from sediment. Fraction of waking hours (16 hrs/day) that are spent on site.

[j]EPA 1992f, Dermal Exposure Assessment: Principles and Applications, EPA/600/8-91/011B

[k]csv = Chemical-specific value.

[a] [l]EPA 1990*ed*, EPA/600/8-89/043, Exposure Factor Handbook, IR for beef and milk are from pg. 2-27; IR for drinking water, pg. 2-3; IR for fish, pg. 2-3.

See footnotes at end of table.

TABLE B.2-3A
(Continued)

~~e~~ [m]USDA 1985, Report No. 85-1, National Food Consumption Food Survey, values include a fraction of food produced at home, i.e.: .35 for fruits and vegetables, .75 for meats, and .75 for milk (as recommended in the Exposure Factor Handbook).

~~p~~ [n]DOE 1994, Supplemental Guidance to the Risk Assessment Work Plan Addendum.

~~q~~ [o]Based on specific biomedical values provided from the Childrens Hospital at the University of Cincinnati.

~~r~~ [p]Assumption. The Superfund Exposure Assessment Manual, ~~April 1988~~ *(EPA 1988c)*, p. 129, recommends 50 ml/hr for swimming, but Paddys Run is an intermittent stream not deep enough for swimming. Therefore, a slightly lower value of 35 ml/hr seems reasonable.

~~s~~ [q]EPA 1990~~a~~ *d*, "Exposure Factor Handbook" EPA/600/8-89/043. Fraction of time homegrown produce is eaten (FI) is from the (FI) presented in Part II, Page 1-10; IR for beef and milk are from page 2-27; IR for drinking water, page 2-3.

U.S. EPA Comment No. 26, *Nos. 48, 57*

TABLE B.2-3B

PARAMETERS USED TO ESTIMATE POTENTIAL EXPOSURES FOR CURRENT LAND USE RECEPTORS

Pathway Parameters	Groundskeeper	User of GMR Recreational	User of GMR Agricultural	User of GMR Residential
All Pathways (unless otherwise noted)				
EF (d/yr)	35[c]	7[m]	350[m]	350[m]
ED (yr)	25[c,l]	30[m]	70[m]	70[m]
BW (kg)	70[a]	70[a]	70[a]	70[a]
AT-Noncancer (d)[g]	9125[d]	10950[d]	25550[d]	25550[d]
AT-Cancer (d)[h]	25550[a,e]	25550[a,e]	25550[a,e]	25550[a,e]
Inhalation of Particulates and Radionuclides				
IR (m^3/hr)	2.5[l]	NA[b]	NA	NA
ET (hr/d)	8[l]	NA	NA	NA
C_a (mg/m^3) (pCi/m^3)	csv[g]	NA	NA	NA
Ingestion of Soil				
IR (mg/d)	100[a]	NA	NA	NA
FI (unitless)	1.0[a]	NA	NA	NA
C_s (mg/kg) (pCi/g)	csv	NA	NA	NA
CF - rads (g/mg)	1.0E-03	NA	NA	NA
CF - chem (kg/mg)	1.0E-06	NA	NA	NA
Ingestion of Sediment				
IR (mg/d)	NA	NA	NA	NA
FI (unitless)	NA	NA	NA	NA
C_{sd} (mg/kg) (pCi/g)	NA	NA	NA	NA
CF - rads (g/mg)	NA	NA	NA	NA
CF - chem (kg/mg)	NA	NA	NA	NA

See footnotes at end of table.

TABLE B.2-3B
(Continued)

Pathway Parameters	Groundskeeper	User of GMR Recreational	User of GMR Agricultural	User of GMR Residential
Dermal Contact with Soil				
SA (cm^2)	5750[f]	NA	NA	NA
AF (mg/cm^2 -d)	1.0[f]	NA	NA	NA
ABS (unitless)	csv	NA	NA	NA
C_s (mg/kg)	csv	NA	NA	NA
CF (kg/mg)	1.0 E-6	NA	NA	NA
Dermal Contact with Sediment				
SA (cm^2)	NA	NA	NA	NA
AF (mg/cm^2 -d)	NA	NA	NA	NA
ABS (unitless)	NA	NA	NA	NA
C_{sd} (mg/kg)	NA	NA	NA	NA
CF (kg/mg)	NA	NA	NA	NA
External Radiation Exposure				
C_r (pCi/g)	csv	NA	NA	NA
ET indoors (hr/d)	NA	NA	NA	NA
ET outdoors (hr/d) sed	NA	NA	NA	NA
ET outdoors (hr/d) soil	8[c,l]	NA	NA	NA
SH indoors (unitless)	NA	NA	NA	NA
SH outdoors (unitless)	0[a]	NA	NA	NA
CF (yr/hr)	1.14 E-4	NA	NA	NA
Ingestion of Surface Water				
IR (L/hr)	NA	0.05	NA	NA
ET (hr/day)	NA	2.6	NA	NA
C_{sw} (mg/L) (pCi/L)	NA	csv	NA	NA

See footnotes at end of table.

TABLE B.2-3B
(Continued)

Pathway Parameters	Groundskeeper	User of GMR Recreational	User of GMR Agricultural	User of GMR Residential
Dermal Contact with Surface Water				
SA (cm^2)	NA	23000[f]	NA	NA
DA (mg/cm^2-d)	NA	csv	NA	NA
Ingestion of Fish				
IR (kg/d)	NA	0.054[m]	NA	NA
EF (d/yr)	NA	122[m]	NA	NA
C_{if} (mg/kg)(pCi/g)	NA	csv	NA	NA
CF (g/kg)	NA	1.0E+3	NA	NA
Ingestion of Homegrown Fruits				
IR (kg/d)	NA	NA	0.142[f]	NA
FI (unitless)	NA	NA	0.30[j]	NA
C_{iv} (mg/kg) (pCi/g)	NA	NA	csv	NA
CF RAD (g/kg)	NA	NA	1.0E+3	NA
Ingestion of Homegrown Vegetables				
IR (kg/d)	NA	NA	0.201[f]	NA
FI (unitless)	NA	NA	0.40[j]	NA
C_{iv} (mg/kg)(pCi/g)	NA	NA	csv	NA
CF RAD (g/kg)	NA	NA	1.0E+3	NA
Ingestion of Home Produced Meats				
IR (meat) (kg/d)	NA	NA	0.101[h]	NA
FI (unitless)	NA	NA	0.75[j]	NA
C_{ia} (mg/kg)(pCi/kg)	NA	NA	csv	NA
Ingestion of Milk				
IR (L/day)	NA	NA	0.4[h]	NA
FI (unitless)	NA	NA	0.75[j]	NA
C_{im} (mg/L) (pCi/L)	NA	NA	csv	NA
Ingestion of Drinking Water				

See footnotes at end of table.

TABLE B.2-3B
(Continued)

Pathway Parameters	Groundskeeper	User of GMR Recreational	User of GMR Agricultural	User of GMR Residential
IR (L/day)	NA	NA	NA	2
FI (unitless)	NA	NA	NA	1
C_w (mg/L) (pCi/L)	NA	NA	NA	csv
Dermal Contact While Bathing				
SA (cm^2)	NA	NA	NA	23000[f]
DA_a (mg/cm^2 - d)	NA	NA	NA	csv
Inhalation of Volatiles Released from Household Water Use				
IR (m^3/d)	NA	NA	NA	15[l]
C_w (mg/L)	NA	NA	NA	csv
K (L/m^3)	NA	NA	NA	0.5[k]

[a]Parameter values obtained from the Risk Assessment Work Plan Addendum (DOE 1992a) and revisions per comments received from EPA, unless otherwise noted.

[b]NA = Not applicable.

[c]Assumes the worker is a groundskeeper, who works 8 hours/day, 1 day/week, 35 weeks/year on the ground of Operable Unit 2.

[d]Calculated as the product of ED (years) x 365 days/year.

[e]Calculated as the product of 70 years (assumed lifetime) x 365 days/year.

[f]EPA 1992f, Dermal Exposure Assessment: Principles and Applications, EPA/600/8-91/011B

[g]csv = Chemical-specific value.

[h]EPA 1990~~c~~ *d*, EPA/600/8-89/043, Exposure Factor Handbook, IR for beef and milk are from pg. 2-27; IR for drinking water, pg. 2-3; IR for fish, pg. 2-3.

[i]EPA 1991*d*, OSWER Directive 9285.7-0113, RAGS, Volume 1, Part B.

[j]USDA 1985, Report No. 85-1, National Food Consumption Food Survey, values include a fraction of food produced at home, i.e.: .35 for fruits and vegetables, .75 for meats, and .75 for milk (as recommended in the Exposure Factor Handbook).

[k]EPA 1991d RAGS, Vol. 1, Part B, pg. 20-22. Using the Andelman Model 1990, it is assumed that half the concentration of volatile chemicals in water transfer to air.

See footnotes at end of table.

58.94

TABLE B.2-3B
(Continued)

[l]EPA 1991*f*, Standard Default Exposure Factors, OSWER directive 9285.6-03.

[m]DOE, 1994, Supplemental Guidance to the Risk Assessment Work Plan Addendum.

U.S. EPA Comment No. 26, *No. 48*

TABLE B.2-4A

PARAMETERS USED TO ESTIMATE POTENTIAL EXPOSURES FOR FUTURE LAND USE RECEPTORS

Pathway Parameters	RME On-property Resident Farmer Age 1-70	CT On-property Resident Farmer Age 1-70	On-property Resident Child Age 1-6	Off-property Resident Farmer Age 1-70	Off-property Resident Child Age 1-6	On-property Homebuilder
All pathways (except where noted)						
EF (d/yr)	350[a]	234	350[a]	350[a]	350[a]	175[e]
ED (yr)	70[a]	9[i]	6[a]	70[a]	6[a]	0.48[e]
BW (kg)	70[a]	70[a]	15[a]	70[a]	15[a]	70[a]
AT-Noncancer (d)	25550[a,j]	3285[a]	2190[a]	25550[a]	2190[a]	175[e]
AT-Cancer (d)	25550[a,k]	25550[a]	25550[a]	25550[a]	25550[a]	25550[a]
Inhalation of Particulates						
IR (m^3/hr)	0.83[c]	0.83[c]	0.5	0.83[c]	0.5[d]	2.5
ET (hr/d)	5.7[f]	4.9[e]	2[a]	5.7[f]	2[g]	10[w]
C_a (mg/m^3) (pCi/m^3)	csv	csv[m]	csv	csv	csv	csv
Inhalation of Indoor Radon						
IR (m^3/d)	15[s]	15[s]	15[s]	NA[b]	NA	NA
C_{Rn} (pCi/m^3)	csv	csv	csv	NA	NA	NA
Ingestion of Drinking Water						
IR (L/d)	2[u]	1.4[e]	1.0[u]	2[u]	1.0[u]	NA
FI (unitless)	1	1	1	1	1	NA
C_w (pCi/L) (mg/L)	csv	csv	csv	csv	csv	NA
Inhalation of Volatiles Released from Household Water Use						
IR (m^3/d)	15[s]	15[s]	15[s]	15[s]	15[s]	NA
K (L/m^3)	0.5[s]	0.5[s]	0.5[s]	0.5[s]	0.5[s]	NA
C_w (mg/L)	csv	csv	csv	csv	csv	NA

See footnotes at end of table.

TABLE B.2-4A
(Continued)

Pathway Parameters	RME On-property Resident Farmer Age 1-70	CT On-property Resident Farmer Age 1-70	On-property Resident Child Age 1-6	Off-property Resident Farmer Age 1-70	Off-property Resident Child Age 1-6	On-property Homebuilder
Dermal Contact While Bathing						
SA (cm^2)	23000[l]	20000[l]	8000[l]	23000[l]	8000[l]	NA
DA_w (mg/cm^2 - d)	csv	csv	csv	csv	csv	NA
Ingestion of Soil						
IR (mg/d)	180[v]	100[e]	200[v]	NA	NA	480[l]
FI (unitless)	1[n]	1[l]	1[n]	NA	NA	1[h]
C_s (mg/kg) (pCi/g)	csv	csv	csv	NA	NA	csv
CF - rads (g/mg)	1.0E-3	1.0E-3	1.0E-3	NA	NA	1.0E-3
CF - chem (kg/mg)	1.0E-6	1.0E-6	1.0E-6	NA	NA	1.0E-6
Dermal Contact with Soil						
SA (cm^2)	5750[l]	5000[l]	2000[l]	NA	NA	5750[l]
AF (mg/cm^2 -d)	1.0[l]	0.2[l]	1.0[l]	NA	NA	1.0
ABS (unitless)	csv	csv	csv	NA	NA	1.0[l]
C_s (mg/kg)	csv	csv	csv	NA	NA	csv
CF (kg/mg)	1.0E-6	1.0E-6	1.0E-6	NA	NA	1.0E-6
C_s (mg/kg)	csv	csv	csv	NA	NA	csv
External Radiation Exposure						
ET indoors (hr/d)	18.3[f]	19.1[e]	22[g]	NA	NA	4[e]
ET outdoors (hr/d)	5.7[f]	4.9[e]	2[g]	NA	NA	4[e]
SH indoors (unitless)	0.5[a]	0.5[a]	0.5[a]	NA	NA	0.5[a]
SH outdoors (unitless)	0[a]	0[a]	0[a]	NA	NA	0[a]
C_r (pCi/g)	csv	csv	csv	NA	NA	csv
CF (yr/hr)	1.14E-4	1.14E-4	1.14E-4	NA	NA	1.14E-4

See footnotes at end of table.

5R04

TABLE B.2-4A
(Continued)

Pathway Parameters	RME On-property Resident Farmer Age 1-70	CT On-property Resident Farmer Age 1-70	On-property Resident Child Age 1-6	Off-property Resident Farmer Age 1-70	Off-property Resident Child Age 1-6	On-property Homebuilder
Ingestion of Homegrown Fruits						
IR (kg/d)	0.142[e]	0.142[e]	0.204[e]	0.142[e]	0.204[e]	NA
FI (unitless)	0.30[e]	0.20[e]	0.30[e]	0.30[e]	0.30[e]	NA
CF RAD (g/kg)	1.0E+3	1.0E+3	1.0E+3	1.0E+3	1.0E+3	NA
C_{fr} (mg/kg) (pCi/g)	csv	csv	csv	csv	csv	NA
Ingestion of Vegetables						
IR (kg/d)	0.201[e]	0.201[e]	0.100[e]	0.201	0.100[e]	NA
FI (unitless)	0.40[e]	0.25[e]	0.40[e]	0.40	0.40	NA
C_v (mg/kg) pCi/g)	csv	csv	csv	csv	csv	NA
CF RAD (g/kg)	1.0E+3	1.0E+3	1.0E+3	1.0E+3	csv	NA
Ingestion of Home Produced Meats						
IR (kg/d)	0.101[t,o]	0.101[e]	0.039[t,o]	0.101[t,o]	0.039[t,o]	NA
FI (unitless)	0.75[t]	0.5[e]	0.75[t,o]	0.75[t,o]	0.75[t]	NA
C_{ia} (mg/kg) (pCi/g)	csv	csv	csv	csv	csv	NA
Ingestion of Milk						
IR (L/day)	0.4[o,a]	0.4[o,a]	0.9[o,a]	0.4[o,a]	0.9[a]	NA
FI (unitless)	0.75[t]	0.53[t]	0.75[t]	0.75[t]	0.75[t]	NA
C_{im} (mg/L) (pCi/L)	csv	csv	csv	csv	csv	NA
Ingestion of Surface Water						
C_{isw} (mg/L) (pCi/L)	NA	NA	NA	NA	NA	NA
ET (hr/d)	NA	NA	NA	NA	NA	NA
IR (L/hr)	NA	NA	NA	NA	NA	NA

See footnotes at end of table.

TABLE B.2-4A
(Continued)

Pathway Parameters	RME On-property Resident Farmer Age 1-70	CT On-property Resident Farmer Age 1-70	On-property Resident Child Age 1-6	Off-property Resident Farmer Age 1-70	Off-property Resident Child Age 1-6	On-property Homebuilder
Dermal Contact with Surface Water						
SA (cm^2)	NA	NA	NA	NA	NA	NA
DA (mg/cm^2-d)	NA	NA	NA	NA	NA	NA

[a]Parameter values obtained from the RAWPA (DOE 1992a) and revisions per comments received from EPA, unless otherwise noted.

[b]NA = Not applicable.

[c]Derived by dividing the default adult human inhalation rate of 20 m^3/day (EPA 1989a, Risk Assessment Guidance for Superfund) by 24 hours/day, and rounding to two significant figures.

[d]EPA 1993c, "Risk-Based Concentration Table, Second Quarter 1993" EPA Region III, May 10.

[e]Parameter values obtained from the Supplemental Guidance to the RAWPA (DOE 1994) and revisions per OU1 RI, May 1994 comments. Assumes 175 days of Homebuilding Activities.

[f]Special guidance from EPA Region V. 8 hrs/d spent outdoors for 250 d/yr = 2000 hrs/d; this value divided by 350 d/yr on site = 5.7 hrs/d spent outdoors; 18.3 hrs/d spent indoors determined by difference.

[g]Assumes a small resident child spends 700 hrs/yr outdoors.

[h]Specific guidance form EPA Region V (1/6/94 comments on OU4 RI Final Report): Standard trespass scenario assumes 3 d/wk for months June through August = 36 days plus 1 d/wk for months April, May September, and October = 16 days for a total.

[i]EPA 1991a *b*, Risk Assessment Guidance for Superfund: Vol. I - Human Health Evaluation Manual Supplemental Guidance "Standard Default Exposure Factors", Interim Final, OSWER Directive: 9285.6-03.

[j]Calculated as the product of ED (years) x 365 days/year.

[k]Calculated as the product of 70 years (assumed lifetime) x 365 days/year.

[l]EPA 1992f, "Dermal Exposure Assessment: Principals and Applications", EPA/600/8-91/011B.

TABLE B.2-4A
(Continued)

[m]csv = Chemical-specific values, - PC and ABS from Table D.3-14; DR from Table D.3-15.

[n]Assumed value based on fraction of day spent on site.

[o]EPA 1990~~e~~ *d*, "Exposure Factor Handbook" EPA/600/8-89/043. Fraction of time homegrown produce is eaten (FI) is from Part II, page 1-10; IR for beef and milk are from page 2-27; IR for drinking water, page 2-3; IR for fish, page 2-3.

[p]Assumes the expanded trespasser visits the site 110 day/yr (2 hr/day) as a youth, and 40 days/yr (1 hr/day) as an adult for a total of 44 years. Only the youth plays in Paddys Run.

[q]Assumes a wading scenario because Paddys Run is too shallow for swimming, therefore, approximately 31% of total body surface for feet, lower legs, hands, and forearms.

[r]Assumption, "Superfund Exposure Assessment Manual", ~~April 1988~~ *EPA 1988c*, pg. 129, recommends 50 ml/hr for swimming, but Paddys Run is an intermittent stream not deep enough for swimming. Therefore, a slightly lower value seems reasonable.

[s]EPA 1991~~a~~ *d* Risk Assessment Guidance for Superfund: Vol.1, Part B, pg 20-22, Using the Andelman Model 1990, it is assumed that half the concentration of volatile chemicals in water transfer to air.

[t]USDA 1985, Report No. 85-1, National Food Consumption Food Survey, values include a fraction of food produced at home, i.e.: .30 for fruits and .40 for vegetables, 0.75 for meats, and 0.75 for milk (as recommended in the Exposure Factor Handbook).

[u]EPA 1989*a*, Risk Assessment Guidance for Superfund, Volume I - Human Health Evaluation Manual Part A. EPA/54011-89/002.

[v]Soil ingestion rates for the farmers are from OU4 RI comments and responses, stating that the soil ingestion rate of 180 mg/day represents an age occupational adjusted value.

Comment Nos. 48, 58

5894
000202

TABLE B.2-4B

PARAMETERS USED TO ESTIMATE POTENTIAL EXPOSURES FOR FUTURE LAND USE RECEPTORS

Pathway Parameters	Expanded Trespasser Youth	Expanded Trespasser Adult	User of GMR Recreational	User of GMR Agricultural	User of GMR Residential	Perched Groundwater User
All pathways (except where noted)						
EF (d/yr)	110[e]	40	7[s]	350[s]	350[s]	350[a]
ED (yr)	12[e]	32	30[s]	70[s]	70[s]	70[a]
BW (kg)	43[a]	70	70[a]	70[a]	70[a]	70[a]
AT-Noncancer (d)	4380[a,g]	11680[a,g]	10950[e,g]	25550[a,g]	25550[a,g]	25550[a,g]
AT-Cancer (d)	25550[a,h]	25550[a,h]	25550[a,h]	25550[a,h]	25550[a,h]	25550[a,h]
Inhalation of Particulates						
IR (m^3/hr)	0.83[c]	0.83[c]	NA[b]	NA	NA	0.83[c]
ET (hr/d)	2[p]	1[p]	NA	NA	NA	5.7[f]
C_a (mg/m^3) (pCi/m^3)	csv	csv	NA	NA	NA	csv
Inhalation of Indoor Radon						
IR (m^3/d)	NA	NA	NA	NA	NA	15[s]
C_{Rn}(pCi/m^3)	NA	NA	NA	NA	NA	csv
Ingestion of Drinking Water						
IR (L/d)	NA	NA	NA	NA	2[s]	2[u]
FI (unitless)	NA	NA	NA	NA	1[s]	1
C_w (pCi/L) (mg/L)	NA	NA	NA	NA	csv	csv
Inhalation of Volatiles Released from Household Water Use						
IR (m^3/d)	NA	NA	NA	NA	15[e,o]	15[s]
K (L/m^3)	NA	NA	NA	NA	0.5[e,o]	0.5[s]
C_w (mg/L)	NA	NA	NA	NA	csv	csv

See footnotes at end of table.

TABLE B.2-4B
(Continued)

Pathway Parameters	Expanded Trespasser Youth	Expanded Trespasser Adult	User of GMR Recreational	User of GMR Agricultural	User of GMR Residential	Perched Groundwater User
Dermal Contact While Bathing						
SA (cm^2)	NA	NA	NA	NA	23000[l]	23000[l]
DA_w (mg/cm^2 - d)	NA	NA	NA	NA	csv	csv
Ingestion of Soil						
IR (mg/d)	100[e]	100[e]	NA	NA	NA	180[v]
FI (unitless)	0.12[6 r]	0.125[6 r]	NA	NA	NA	1
C_s (mg/kg) (pCi/g)	csv	csv	NA	NA	NA	csv
CF - rads (g/mg)	1.0E-3	1.0E-3	NA	NA	NA	1.0E-3
CF - chem (kg/mg)	1.0E-6	1.0E-6	NA	NA	NA	1.0E-6
Ingestion of Sediment						
IR (mg/d)	100[e]	NA	NA	NA	NA	NA
FI (unitless)	0.063[6 r]	NA	NA	NA	NA	NA
C_{sd} (mg/kg) (pCi/g)	csv	NA	NA	NA	NA	NA
CF - rads (g/mg)	1.0E-3	NA	NA	NA	NA	NA
CF - chem (kg/mg)	1.0E-6	NA	NA	NA	NA	NA
Dermal Contact Sediment						
SA (cm^2)	5130[6]	NA	NA	NA	NA	NA
AF (mg/cm^2 -d)	1.0[6]	NA	NA	NA	NA	NA
ABS (unitless)	csv	NA	NA	NA	NA	NA
C_{sd} (mg/kg)(pCi/g)	csv	NA	NA	NA	NA	NA
CF chem (kg/mg)	1.0E-6	NA	NA	NA	NA	NA

See footnotes at end of table.

TABLE B.2-4B
(Continued)

Pathway Parameters	Expanded Trespasser Youth	Expanded Trespasser Adult	User of GMR Recreational	User of GMR Agricultural	User of GMR Residential	Perched Groundwater User
Dermal Contact with Soil						
SA (cm^2)	4200[l]	5750	NA	NA	NA	5750[l]
AF (mg/cm^2 -d)	1.0[i]	1.0	NA	NA	NA	1.0[i]
ABS (unitless)	csv	csv	NA	NA	NA	csv
C_s (mg/kg) (pCi/g)	csv	csv	NA	NA	NA	csv
CF (kg/mg)	1.0E-6	1.0E-6	NA	NA	NA	1.0E-6
External Radiation Exposure						
ET indoors (hr/d)	NA	NA	NA	NA	NA	18.3
ET outdoors (hr/d)	2[p]	1[p]	NA	NA	NA	5.7
SH indoors (unitless)	NA	NA	NA	NA	NA	0.5
SH outdoors (unitless)	0[q]	0[q]	NA	NA	NA	0
C_r (pCi/g)	csv	csv	NA	NA	NA	csv
CF (yr/hr)	1.14E-4	1.14E-4	NA	NA	NA	1.14E-4
Ingestion of Homegrown Fruits						
IR (kg/d)	NA	NA	NA	0.142[k,s,r]	NA	0.142[g]
FI (unitless)	NA	NA	NA	0.30[p,s,r]	NA	0.30[g]
C_{fr} (mg/kg) (pCi/g)	NA	NA	NA	csv	NA	cvs
CF-RAD (g/kg)	NA	NA	NA	1.0E+3	NA	1.0E+3
Ingestion of Vegetables						
IR (kg/d)	NA	NA	NA	0.201[k,s,r]	NA	0.201
FI (unitless)	NA	NA	NA	0.40[p,s,r]	NA	0.40
CF RAD (g/kg)	NA	NA	NA	1.0E+3	NA	1.0E+3
C_{fv} (mg/kg) (pCi/g)	NA	NA	NA	csv	NA	csv

See footnotes at end of table.

TABLE B.2-4B
(Continued)

Pathway Parameters	Expanded Trespasser Youth	Expanded Trespasser Adult	User of GMR Recreational	User of GMR Agricultural	User of GMR Residential	Perched Groundwater User
Ingestion of Home Produced Meats						
IR (kg/d)	NA	NA	NA	0.101[k,s,r]	NA	0.101[e]
FI (unitless)	NA	NA	NA	0.75[p,s,r]	NA	0.75[e]
C_{ia} (mg/kg) (pCi/kg)	NA	NA	NA	csv	NA	csv
Ingestion of Milk						
IR (L/day)	NA	NA	NA	0.4[k,s,r]	NA	0.4[e]
FI (unitless)	NA	NA	NA	0.75[p,s,r]	NA	0.75[e]
C_{im} (mg/L) (pCi/L)	NA	NA	NA	csv	NA	csv
Ingestion of Surface Water						
IR (L/hr)	0.035[t,y]	NA	0.5[n]	NA	NA	NA
ET (hr/d)	1	NA	2.6	NA	NA	NA
C_{isw} (mg/L) (pCi/L)	csv	NA	csv	NA	NA	NA
Dermal Contact with Surface Water						
SA (cm^2)	5130[m]	NA	23000[e]	NA	NA	NA
DA (mg/cm^2-d)	csv	NA	csv	NA	NA	NA
Ingestion of Fish						
IR (kg/d)	NA	NA	0.054[s,r]	NA	NA	NA
EF (d/yr)	NA	NA	122[s,r]	NA	NA	NA
C_{if} (mg/kg) (pCi/g)	NA	NA	csv	NA	NA	NA
CF RAD (g/kg)	NA	NA	1.0E+3	NA	NA	NA

See footnotes at end of table.

TABLE B.2-4B
(Continued)

[a]Parameter values obtained from the RAWPA (DOE 1992a) and revisions per comments received from EPA, unless otherwise noted.

[b]NA = Not applicable.

[c]Derived by dividing the default adult human inhalation rate of 20 m^3/day (EPA 1989a, Risk Assessment Guidance for Superfund) by 24 hours/day, and rounding to two significant figures.

[d]Special guidance from EPA Region V. 8 hrs/d spent outdoors for 250 d/yr = 2000 hrs/d; this value divided by 350 d/yr on site = 5.7 hrs/d spent outdoors; 18.3 hrs/d spent indoors determined by difference.

[e]Specific guidance form EPA Region V (1/6/94 comments on OU4 RI Final Report): Standard trespass scenario assumes 3 d/wk for months June through August = 36 days plus 1 d/wk for months April, May September, and October = 16 days for a total.

[f]EPA 1991*d*, Risk Assessment Guidance for Superfund: Vol. I - Human Health Evaluation Manual, Part B, Development of Risk-Based Preliminary Remediation Goals, Interim, OSWER Directive: 9285.7-01B.

[g]Calculated as the product of ED (years) x 365 days/year.

[h]Calculated as the product of 70 years (assumed lifetime) x 365 days/year.

[i]EPA 1992f, "Dermal Exposure Assessment: Principals and Applications", EPA/600/8-91/011B.

[j]csv = Chemical-specific values

[k]EPA 1990~~c~~ *d*, "Exposure Factor Handbook" EPA/600/8-89/043. Fraction of time homegrown produce is eaten (FI) is from Part II, page 1-10; IR for beef and milk are from page 2-27; IR for drinking water, page 2-3; IR for fish, page 2-3.

[l]Assumes the expanded trespasser visits the site 110 day/yr (2 hr/day) as a youth, and 40 days/yr (1 hr/day) as an adult for a total of 44 years. Only the youth plays in Paddys Run.

[m]Assumes a wading scenario because Paddys Run is too shallow for swimming, therefore, approximately 31% of total body surface for feet, lower legs, hands, and forearms.

[n]Assumption, "Superfund Exposure Assessment Manual", ~~April 1988~~ *EPA 1988c*, pg. 129, recommends 50 ml/hr for swimming, but Paddys Run is an intermittent stream not deep enough for swimming. Therefore, a slightly lower value seems reasonable.

See footnotes at end of table.

5894

TABLE B.2-4B
(Continued)

[o]EPA 1991~~a~~ *d* Risk Assessment Guidance for Superfund: Vol.1, Part B, pg 20-22, Using the Andelman Model 1990, it is assumed that half the concentration of volatile chemicals in water transfer to air.

[p]USDA 1985, Report No. 85-1, National Food Consumption Food Survey, values include a fraction of food produced at home, i.e.: .30 for fruits and .40 for vegetables, 0.75 for meats, and 0.75 for milk (as recommended in the Exposure Factor Handbook).

[q]EPA, 1989, Risk Assessment Guidance for Superfund, Volume I - Human Health Evaluation Manual Part A. EPA/5401-89/002.

[~~s~~ r]Parameter values obtained from the Supplemental Guidance to the RAWPA (DOE, 1994) and revisions per comments received from EPA.

[~~t~~ s]Soil ingestion rates for the farmers are from OU4 RI comments and responses, stating that the soil ingestion rate of 180 mg/day represents an age occupational adjusted value.

Comment Nos. 48, 58

TABLE B.2-5A

TRANSFER FACTORS (TF) USED IN EXPOSURE MODELS

Constituent	TRANSFER FACTORS					
	BCF Fish (L/g)	Beef TF (day/kg)	Milk TF (day/L)	$B_{iv(1)}$ (unitless)	$B_{iv(2)}$[l] (unitless)	Log K_{OW}[m]
RADIONUCLIDES						
Radium	5.00×10^{1}[a]	2.50×10^{-4}[b]	4.50×10^{-4}[b]	1.50×10^{-2}[b]	6.42×10^{-4}[b]	NA
Strontium	3.00×10^{1}[a]	3.00×10^{-4}[b]	1.50×10^{-3}[b]	2.50×10^{0}[b]	1.07×10^{-1}[b]	NA
Technetium	1.50×10^{1}[a]	8.50×10^{-3}[b]	1.00×10^{-2}[b]	9.50×10^{0}[b]	6.42×10^{-1}[b]	NA
Thorium	3.00×10^{1}[a]	6.00×10^{-6}[b]	5.00×10^{-6}[b]	8.50×10^{-4}[b]	3.64×10^{-5}[b]	NA
Uranium	2.00×10^{0}[a]	2.00×10^{-4}[b]	6.00×10^{-4}[b]	8.50×10^{-3}[b]	1.71×10^{-3}[b]	NA
INORGANICS						
Antimony	1.00×10^{0}[c]	1.00×10^{-3}[b]	1.00×10^{-4}[b]	2.00×10^{-1}[b]	1.28×10^{-2}[b]	NA
Arsenic	4.40×10^{1}[c]	2.00×10^{-3}[b]	6.00×10^{-5}[b]	4.00×10^{-2}[b]	2.57×10^{-3}[b]	NA
Barium	ND	1.50×10^{-4}[b]	3.50×10^{-4}[b]	1.50×10^{-1}[b]	6.42×10^{-3}[b]	NA
Beryllium	1.90×10^{1}[c]	1.00×10^{-3}[b]	9.00×10^{-7}[b]	1.00×10^{-2}[b]	6.42×10^{-4}[b]	NA
Cadmium (food)	8.10×10^{1}[c]	5.50×10^{-4}[b]	1.00×10^{-3}[b]	5.50×10^{-1}[b]	6.42×10^{-2}[b]	NA
Lead	4.90×10^{1}[c]	3.00×10^{-4}[b]	2.50×10^{-4}[b]	4.50×10^{-2}[b]	3.85×10^{-3}[b]	NA
Selenium	1.60×10^{1}[c]	1.50×10^{-2}[b]	4.00×10^{-3}[b]	2.50×10^{-2}[b]	1.07×10^{-2}[b]	NA
Thallium	ND	4.00×10^{-2}[b]	2.00×10^{-3}[b]	4.00×10^{-3}[b]	1.71×10^{-4}[b]	NA
Uranium	2.00×10^{0}[a]	2.00×10^{-4}[b]	6.00×10^{-4}[b]	8.50×10^{-3}[b]	1.71×10^{-3}[b]	NA
SEMIVOLATILE ORGANICS						
Benzo(a)anthracene	1.18×10^{4}[j]	1.15×10^{-5}[d]	3.63×10^{-2}[e]	2.07×10^{-2}[f]	8.87×10^{-3}[g]	5.66[h]
Benzo(a)pyrene	2.55×10^{4}[j]	3.16×10^{-5}[d]	1.00×10^{-2}[e]	1.15×10^{-2}[f]	4.94×10^{-3}[g]	6.10[h]
Benzo(b)fluoranthene	2.64×10^{4}[j]	3.31×10^{-5}[d]	1.05×10^{-2}[e]	1.12×10^{-2}[f]	4.81×10^{-3}[g]	6.12[h]
Benzo(g,h,i)perylene	1.84×10^{5}[i]	4.27×10^{-1}[d]	1.35×10^{-1}[e]	2.56×10^{-3}[f]	1.10×10^{-3}[g]	7.23[h]
SEMIVOLATILE ORGANICS (Continued)						
bis(2-Ethylhexyl)phthalate	6.28×10^{3}[i]	5.01×10^{-3}[d]	1.58×10^{-3}[e]	3.35×10^{-2}[f]	1.43×10^{-3}[g]	5.3[h]
Dibenzo(a,h)anthracene	2.03×10^{4}[i]	1.74×10^{-4}[d]	5.50×10^{-2}[e]	4.31×10^{-3}[f]	1.84×10^{-3}[g]	6.84[h]
Indeno(1,2,3-cd)pyrene	3.90×10^{5}[i]	9.55×10^{-5}[d]	3.02×10^{-2}[e]	6.09×10^{-3}[f]	2.61×10^{-3}[g]	6.58[h]
Phenanthrene	1.75×10^{3}[i]	9.33×10^{-2}[d]	2.95×10^{-1}[e]	8.84×10^{-2}[f]	3.78×10^{-2}[g]	4.57

See footnotes at end of table

210

TABLE B.2-5A
(Continued)

Constituent	TRANSFER FACTORS					
	BCF Fish (L/g)	Beef TF (day/kg)	Milk TF (day/L)	$B_{iv(1)}$ (unitless)	$B_{iv(2)}$[l] (unitless)	Log K_{OW}[m]
Tributyl phosphate	6.46×10^{2}[i]	2.51×10^{-4}[d]	7.94×10^{-5}[e]	1.89×10^{-1}[f]	8.09×10^{-2}[g]	4.00[h]
PESTICIDES/PCBS						
Aroclor-1254	2.25×10^{4}[k]	2.69×10^{-2}[j]	8.50×10^{-3}[j]	1.27×10^{-2}[j]	5.45×10^{-3}[g]	6.03
Aroclor-1260	1.59×10^{5}[k]	3.52×10^{-4}[j]	1.11×10^{-3}[e]	2.87×10^{-3}[f]	1.20×10^{-3}[g]	7.15
Dieldrin	4.76×10^{3}[c]	7.94×10^{-3}[j]	1.07×10^{-2}[j]	9.77×10^{-2}[j]	4.18×10^{-2}[g]	4.56

[a]NRC, 1984, "De Minimis Waste Impacts Analysis Methodology", NEREG/CR-3585.

[b]Baes, C.F. III, R.D. Sharp, A.L. Sjoreen, R.W. Shor, 1984, "A Review and Analysis of Parameters for Assessing Transport of Environmentally Released Radionuclides Through Agriculture", U.S. DOE, ORNL-5786.

[c]EPA, 1986a, Superfund Public Health Evaluation Manual (SPHEM).

[d]Log of biotransfer factor in beef (Log Bb) calculated from geometric mean regression model: Log Bb = -7.6 + Log K_{ow} (Travis & Arms 1988).

[e]Log of biotransfer factor in milk (Log Bm) calculated from geometric mean regression model: Log Bm = -8.10 + Log K_{ow} (Travis & Arms 1988).

[f]Log of bioconcentration factor in vegetation (Log Bv) calculate from geometric mean regression model: Log Bv = 1.588 - 0.578 Log K_{ow} (Travis & Arms 1988).

[g]This value was used for leafy vegetable uptake as well as forage plant uptake.

[h]EPA Weri Treatability Database (1991a).

[i]Calculated from log BCF = 0.76 x Log K_{ow} - 0.23 (Lyman et al. 1990).

[j]Value reported in Travis, C.C., and A.D. Armd, 1988, "Bioconcentration of Organics in Beef, Milk, and Vegetation", ES&T Vol. 22, No. 3, pp. 271-274.

[k]Value reported in Lyman et al. 1982, Handbook of Chemical Property Estimation Methods (Table 5-3).

[l]$B_{iv(2)}$ = dry weight to wet weight partitioning coefficient $B_{iv(1)}$ multiplied by an average correction factor of 0.428.

[m]EPA 1992*f*, "Dermal Exposure Assessment: Principles and Applications." All k_{ow}[s] taken from this guidance, unless otherwise specified.

NA = Not available

ND = no data

Comment No. 48

5894

In addition to being exposed to contaminated irrigation water and dust, vegetables, fruit, and livestock feed may be contaminated by root uptake from contaminated soil or waste. A contribution via this pathway is accounted for in the irrigation model; however, this pathway is also considered for areas that are not irrigated with contaminated water but that exhibit surface soil contamination from historical deposition on the soil by various means. The following equation can be used to calculate the constituent concentration in the plant from root uptake of constituents already in the soil (DOE

No. 48 1992a ~~d~~):

$$C_{svi} = (C_{si})B_{iv(2)}e^{-\lambda_{di}t_h} \qquad \text{(B.2-12c)}$$

where:

C_{svi} = concentration of ith contaminant in food crops (pCi/g, rad) or (mg/kg, chem)

C_{si} = concentration of ith contaminant in soil (pCi/g, rad) or (mg/kg, chem)

$B_{iv(2)}$ = dry soil to dry plant partitioning coefficient of ith contaminant in food crops (C_{iv}/C_s)

~~CF_p = dry plant mass to wet plant mass ratio (unitless)~~

λ_{di} = effective depletion constant of ith contaminat in surface soil due to radioactive decay, chemical depletion, and leaching (hr^{-1})

~~λ_{ri} = radioactive or chemical decay constant of ith contaminant (h^{-1})~~

t_h = duration of period between harvest and consumption (hr^{-1})

The total concentration of contaminants in vegetables and fruit (C_{iv}) is calculated with the following equation:

$$\text{(radionuclides)}C_{iv} = C_{vwi} + C_{avi} + C_{svi} \qquad \text{(B.2-13)}$$

$$\text{(chemicals)}C_{iv} = C_{vwi} + C_{avi} + (C_{svi})(CF)$$

~~Site-specific and chemical-specific factors used in these and other food pathway calculations are summarized in Tables B.2-5A, B, and C.~~

TABLE B.2-6A

DERMAL ABSORPTION DOSE CHEMICAL SPECIFIC VALUES FOR DA EQUATIONS

Parameter	K_p (cm/hr)[a]	TAO (hr)	t* (hr)	B	K_{ow}[b]
RADIOLOGICAL					
Thorium-total	1.0×10^{-3}	NA	NA	NA	NA
Uranium-total	1.0×10^{-3}	NA	NA	NA	NA
INORGANICS					
Antimony	1.0×10^{-3}	NA	NA	NA	NA
Arsenic	1.0×10^{-3}	NA	NA	NA	NA
Barium	1.0×10^{-3}	NA	NA	NA	NA
Beryllium	1.0×10^{-3}	NA	NA	NA	NA
Cadmium (food)	1.0×10^{-3}	NA	NA	NA	NA
Cyanide	1.0×10^{-3}	NA	NA	NA	NA
Lead	$4.0 \times 10^{+6}$	NA	NA	NA	NA
Manganese	1.0×10^{-3}	NA	NA	NA	NA
Nickel	1.0×10^{-3}	NA	NA	NA	NA
Selenium	1.0×10^{-3}	NA	NA	NA	NA
Thallium	1.0×10^{-3}	NA	NA	NA	NA
VOLATILE ORGANICS					
1,1,2-Trichlorotrifluoroethane[c]	4.76×10^{-3}	$1.22 \times 10^{+0}$	$2.43 \times 10^{+0}$	1.48×10^{-2}	$1.48 \times 10^{+2}$
1,2-Diethylbenzene[c]		5.76×10^{-1}		$0.00 \times 10^{+0}$	
1,4-Dioxane	3.60×10^{-4}	3.02×10^{-1}	***7.20×10^{-1}***	***5.40×10^{-5}***	3.80×10^{-1}
Acrylonitrile	1.40×10^{-3}	1.84×10^{-1}	4.40×10^{-1}	1.80×10^{-4}	$1.70 \times 10^{+0}$
SEMIVOLATILE ORGANICS					
2-Methylnaphthalene[c]	1.42×10^{-1}	6.45×10^{-0}	$4.87 \times 10^{+0}$	7.24×10^{-1}	$7.24 \times 10^{+3}$
4-Methylphenol[c]	9.33×10^{-3}	3.99×10^{-1}	7.97×10^{-1}	7.94×10^{-3}	$7.94 \times 10^{+1}$
Benzo(a)anthracene	8.10×10^{-1}	$2.15 \times 10^{+0}$	$1.02 \times 10^{+1}$	$4.57 \times 10^{+1}$	$4.57 \times 10^{+5}$
Benzo(a)pyrene	$1.20 \times 10^{+0}$	$2.90 \times 10^{+0}$	$1.42 \times 10^{+1}$	$1.26 \times 10^{+2}$	$1.26 \times 10^{+6}$
Benzo(b)fluoranthene	$1.20 \times 10^{+0}$	$3.01 \times 10^{+0}$	$1.42 \times 10^{+1}$	$1.32 \times 10^{+2}$	$1.32 \times 10^{+6}$
Benzo(g,h,i)pyrene[c]	$5.37 \times 10^{+0}$	$4.22 \times 10^{+0}$	$1.99 \times 10^{+1}$	$1.70 \times 10^{+3}$	$1.70 \times 10^{+7}$
Benzo(k)fluoranthene[c]	$3.97 \times 10^{+0}$	$3.01 \times 10^{+0}$	$1.42 \times 10^{+1}$	$6.92 \times 10^{+2}$	$6.92 \times 10^{+6}$

000212

See footnotes at end of table

TABLE B.2-6A
(Continued)

Parameter	K_p (cm/hr)[a]	TAO (hr)	t* (hr)	B	K_{ow}[b]
SEMIVOLATILE ORGANICS (Continued)					
Bis(2-ethylhexyl)phthalate[c]	6.23×10^{-3}	$2.11 \times 10^{+1}$	$4.22 \times 10^{+1}$	5.30×10^{-4}	$5.30 \times 10^{+0}$
Carbazole[c]	3.94×10^{-2}	9.16×10^{-1}	$3.79 \times 10^{+0}$	1.95×10^{-1}	$1.95 \times 10^{+3}$
Dibenzo(a,h)anthracene	$2.70 \times 10^{+0}$	$4.34 \times 10^{+0}$	$2.05 \times 10^{+1}$	$6.92 \times 10^{+2}$	$6.92 \times 10^{+6}$
Indeno(1,2,3-cd)pyrene	$1.90 \times 10^{+0}$	$4.22 \times 10^{+0}$	$1.99 \times 10^{+1}$	$3.80 \times 10^{+2}$	$3.80 \times 10^{+6}$
Phenanthrene	2.30×10^{-1}	$1.07 \times 10^{+0}$	$5.60 \times 10^{+0}$	$2.90 \times 10^{+0}$	$3.72 \times 10^{+4}$
Tributyl phosphate[c]	3.14×10^{-2}	$3.67 \times 10^{+0}$	$3.08 \times 10^{+1}$	$1.00 \times 10^{+0}$	$1.00 \times 10^{+4}$
PESTICIDE/PCBS					
Aroclor-1254[c]	6.19×10^{-1}	$5.14 \times 10^{+0}$	$2.43 \times 10^{+1}$	$1.07 \times 10^{+2}$	$1.07 \times 10^{+6}$
Aroclor-1260[c]	$3.84 \times 10^{+0}$	$5.14 \times 10^{+0}$	$2.42 \times 10^{+1}$	$1.40 \times 10^{+3}$	$1.40 \times 10^{+7}$
Dieldrin	1.60×10^{-2}	$1.84 \times 10^{+1}$	$3.68 \times 10^{+1}$	4.56×10^{-4}	$4.56 \times 10^{+0}$
Heptachlorodibenzo-p-dioxin[c]	$8.69 \times 10^{+0}$	$8.05 \times 10^{+0}$	$3.80 \times 10^{+1}$	$8.32 \times 10^{+3}$	$8.32 \times 10^{+7}$
Heptchlorodibenzofuran[c]	$1.37 \times 10^{+0}$	$8.05 \times 10^{+0}$	$3.80 \times 10^{+1}$	$1.58 \times 10^{+4}$	$1.58 \times 10^{+8}$
Octachlorodibenzo-p-dioxin[c]	$2.64 \times 10^{+0}$	$8.05 \times 10^{+0}$	$3.80 \times 10^{+1}$	$3.98 \times 10^{+4}$	$3.98 \times 10^{+8}$
Tetrachlorodibenzofuran[c]	$4.60 \times 10^{+0}$	$3.80 \times 10^{+1}$	$3.40 \times 10^{+3}$	$3.40 \times 10^{+3}$	$3.40 \times 10^{+7}$

[a]EPA 1992f, the default value for inorganics is 1.0×10^{-3}, the experimental value for cadmium. Organic K_ps were estimated using the regression equation: $\text{Log } K_p = 02.72 + 0.71 \text{ Log } K_{ow} - 0.0061 \text{ MW}$.

[b]EPA 1992f, "Dermal Exposure Assessment: Principles and Applications." K_{ow}s calculated from this guidance.

[c]*Parameters (K_p, TAU, t*, and B) calculated using appropriate equations in the dermal exposure assessment, EPA 1992f.*

Comment No. 9 (USEPA) and Comment No. 186 (OEPA), *No. 48, 59*

TABLE B.2-6C

DERMAL ABSORPTION DOSE CHEMICAL SPECIFIC VALUES USED IN EXPOSURE MODEL

Parameter	K_p (cm/hr)	Soil Absorption Coefficient (unitless)	TOA (hr)	t* (hr)
RADIOLOGICAL				
Thorium-total	1.0×10^{-3}	1.00×10^{-2}[b]		
Uranium-total	1.0×10^{-3}	1.00×10^{-2}[a]		
INORGANICS				
Antimony	1.0×10^{-3}	1.00×10^{-2}[a]		
Arsenic	1.0×10^{-3}	1.00×10^{-3}[b]		
Barium	1.0×10^{-3}	1.00×10^{-3}[b]		
Beryllium	1.0×10^{-3}	1.00×10^{-2}[b]		
Cadmium (food)	1.0×10^{-3}	1.00×10^{-2}[a]		
Manganese	1.0×10^{-3}	1.00×10^{-2}[b]		
Nickel	1.0×10^{-3}	1.00×10^{-4}[c]		
Selenium	1.0×10^{-3}	1.00×10^{-2}[b]		
Cyanide	1.0×10^{-3}	1.00×10^{-2}[a]		
Lead	1.0×10^{-3}	1.00×10^{-2}[a]		
Thallium	1.0×10^{-3}	1.00×10^{-2}[a]		
VOLATILE ORGANICS				
1,1,2-Trichlorotrifluoroethane	4.76×10^{-3}	3.00×10^{-1}[b]	$1.22 \times 10^{+0}$	$2.43 \times 10^{+0}$
1,2-Diethylbenzene		3.00×10^{-1}[b]	5.76×10^{-1}	
1,4-Dioxane	3.60×10^{-4}	3.00×10^{-1}[b]	3.02×10^{-1}	6.04×10^{-1}
Acrylonitrile	1.40×10^{-3}	3.00×10^{-1}[b]	1.84×10^{-1}	3.69×10^{-1}
SEMIVOLATILE ORGANICS				
2-Methylnaphthalene	1.42×10^{-1}	3.00×10^{-1}[b]	6.45×10^{-0}	$4.87 \times 10^{+0}$
4-Methylphenol	9.33×10^{-3}	3.00×10^{-1}[b]	3.99×10^{-1}	7.97×10^{-1}
Benzo(a)anthracene	8.10×10^{-1}	3.00×10^{-1}[b]	$2.15 \times 10^{+0}$	$1.02 \times 10^{+1}$
Benzo(a)pyrene	$1.20 \times 10^{+0}$	3.00×10^{-1}[b]	$3.01 \times 10^{+0}$	$1.42 \times 10^{+1}$
Benzo(b)fluoranthene	$1.20 \times 10^{+0}$	3.00×10^{-1}[b]	$3.01 \times 10^{+0}$	$1.42 \times 10^{+1}$
Benzo(g,h,i)perylene	$5.37 \times 10^{+0}$	3.00×10^{-1}[b]	$4.22 \times 10^{+0}$	$1.99 \times 10^{+1}$
Benzo(k)fluoranthene	$3.97 \times 10^{+0}$	3.00×10^{-1}[b]	$3.01 \times 10^{+0}$	$1.42 \times 10^{+1}$

See footnotes at end of table

TABLE B.2-6C
(Continued)

Parameter	K_p (cm/hr)	Soil Absorption Coefficient (unitless)	TOA (hr)	t* (hr)
SEMIVOLATILE ORGANICS (Continued)				
Bis(2-ethylhexyl)phthalate	6.23×10^{-3}	4.00×10^{-3}[b]	$2.11 \times 10^{+1}$	$4.22 \times 10^{+1}$
Carbazole	3.94×10^{-2}	3.00×10^{-1}[b]	9.16×10^{-1}	$3.79 \times 10^{+0}$
Dibenzo(a,h)anthracene	$2.70 \times 10^{+0}$	3.00×10^{-1}[b]	$4.34 \times 10^{+0}$	$2.05 \times 10^{+1}$
Indeno(1,2,3-cd)pyrene	$1.90 \times 10^{+0}$	3.00×10^{-1}[b]	$4.22 \times 10^{+0}$	$1.99 \times 10^{+1}$
Phenanthrene	2.30×10^{-1}	3.00×10^{-1}[b]	$1.07 \times 10^{+0}$	$5.41 \times 10^{+0}$
Tributyl phosphate	3.14×10^{-2}	3.00×10^{-1}[b]	$3.67 \times 10^{+0}$	$3.08 \times 10^{+1}$
PESTICIDE/PCBS				
Aroclor-1254	6.19×10^{-1}	6.00×10^{-2}[b]	$5.14 \times 10^{+0}$	$2.43 \times 10^{+1}$
Aroclor-1260	$3.84 \times 10^{+0}$	6.00×10^{-2}[b]	$5.14 \times 10^{+0}$	$2.42 \times 10^{+1}$
Dieldrin	1.60×10^{-2}	6.00×10^{-2}[b]	$1.84 \times 10^{+1}$	$3.68 \times 10^{+1}$
Heptachlorodibenzo-p-dioxin	$8.69 \times 10^{+0}$	3.00×10^{-2}[b]	$8.05 \times 10^{+0}$	$3.80 \times 10^{+1}$
Heptchlorodibenzofuran	$1.37 \times 10^{+0}$	3.00×10^{-2}[b]	$8.05 \times 10^{+0}$	$3.80 \times 10^{+1}$
Octachlorodibenzo-p-dioxin	$2.64 \times 10^{+0}$	3.00×10^{-2}[b]	$8.05 \times 10^{+0}$	$3.80 \times 10^{+1}$
Octachlorodibenzofuran		3.00×10^{-2}[b]	$3.67 \times 10^{+0}$	$3.67 \times 10^{+0}$
Tetrachlorodibenzo-p-dioxin		3.00×10^{-2}[b]		
Tetrachlorodibenzofuran	$4.60 \times 10^{+0}$	3.00×10^{-2}[b]	$3.80 \times 10^{+1}$	$3.40 \times 10^{+3}$

[a]Wester et al. (1991).

[b]EPA 1993~~d~~ *a*, Memorandum from ECAO to EPA Region V, 7/21/93, including Attachments 1-6.

Comment No. 187, 188, and 189 (OEPA), *No. 48*

induces an observable adverse effect. The toxic effect characterized by the LOAEL is referred to as the "critical effect". To derive an RfD, the NOAEL (or LOAEL) is divided by uncertainty factors to ensure that the RfD will be protective of human health. Uncertainty factors are applied to account for (1) extrapolation of data from laboratory animals to humans (interspecies extrapolation), (2) variation in human sensitivity to the toxic effects of a compound (intraspecies differences), (3) derivation of a chronic RfD based on a subchronic rather than a chronic study, and/or (4) derivation of an RfD from the LOAEL rather than the NOAEL. In addition to these uncertainty factors, modifying factors between 0 and 10 may be applied to reflect additional qualitative considerations in evaluating the data. For most compounds, the modifying factor is 1.

Separate RfDs are needed for ingestion and inhalation pathways. EPA (1992b) presents reference concentrations (RfC) for the inhalation route. Inhalation noncancer toxicity values are usually expressed as inhalation concentrations (RfC) in units of mg/m^3. Because noncancer risk characterization requires an estimate of dose in units of mg/kg-day, the inhalation RfC must be converted to an inhalation RfD. This is done by assuming humans weigh 70 kg and inhale 20 m^3 of air per day (i.e., the inhalation RfC (mg/m^3) multiplied by 20 m^3/day and divided by 70 kg yields an inhalation RfD (mg/kg-day)).

The primary source of values for RfDs are the Integrated Risk Information System (IRIS) and the
No. 48 HEAST compiled and maintained by the EPA (EPA ~~1993~~ *1992*a, 1993b). Other EPA sources of RfD values were also consulted, when available. Surrogate chemicals were not used for derivation of an RfD unless the chemical similarity was close and the derivation was highly defensible. Since dermal RfDs are derived from oral RfDs, the oral target organ is adopted as the dermal target organ. RfDs for noncarcinogenic CPCs in Operable Unit 2 are presented in Table B.2-7.

B.2.5.1.2 Chemical Carcinogens

The toxicity information considered in the assessment of potential carcinogenic risks includes (1) a weight-of-evidence classification and (2) a slope factor. The weight-of-evidence classification qualitatively describes the likelihood that a chemical is a human carcinogen and is based on an evaluation of available data from human and animal studies. A chemical may be placed in one of three groups in EPA's classification system to indicate its potential for carcinogenic effects: Group A, a human carcinogen; Group B1, or B2, a probable human carcinogen; and Group C, a possible human carcinogen. Chemicals that cannot be classified as human carcinogens because of a

5894

TABLE B.2-7

REFERENCE DOSES FOR NONCARCINOGENIC CHEMICALS

Parameter	Chronic Oral Reference Dose (mg/kg-day)	Chronic Inhalation Reference Dose[a] (mg/kg-day)	Reference Concentration (mg/m^3)	Effect of Concern		Uncertainty Factor		
				Oral	Inhalation	Oral	Inhalation	Source
RADIOLOGICAL								
Cesium-137+1d	ND	ND	ND	ND	ND	ND	ND	ND
Neptunium-237+1d	ND	ND	ND	ND	ND	ND	ND	ND
Lead-210+2d	ND	ND	ND	ND	ND	ND	ND	ND
Plutonium-238	ND	ND	ND	ND	ND	ND	ND	ND
Plutonium-239/240	ND	ND	ND	ND	ND	ND	ND	ND
Radium-224	ND	ND	ND	ND	ND	ND	ND	ND
Radium-226+8d	ND	ND	ND	ND	ND	ND	ND	ND
Radium-228+1d	ND	ND	ND	ND	ND	ND	ND	ND
Ruthenium-106	ND	ND	ND	ND	ND	ND	ND	ND
Strontium-90+1d	ND	ND	ND	ND	ND	ND	ND	ND
Technetium-99	ND	ND	ND	ND	ND	ND	ND	ND
Thorium-228+7d	ND	ND	ND	ND	ND	ND	ND	ND
Thorium-230	ND	ND	ND	ND	ND	ND	ND	ND
Thorium-232-10d	ND	ND	ND	ND	ND	ND	ND	ND
Thorium-total	ND	ND	ND	ND	ND	ND	ND	ND
Uranium-234	ND	ND	ND	ND	ND	ND	ND	ND
Uranium-235	ND	ND	ND	ND	ND	ND	ND	ND
Uranium-235/236	ND	ND	ND	ND	ND	ND	ND	ND
Uranium-238+2d	ND	ND	ND	ND	ND	ND	ND	ND
Uranium-total	3.0×10^{-3}	ND	ND	Reduced body weight, renal damage	1000	ND	ND	ND

See footnotes at end of table

TABLE B.2-7
(Continued)

Parameter	Chronic Oral Reference Dose (mg/kg-day)	Chronic Inhalation Reference Dose[a] (mg/kg-day)	Reference Concentration (mg/m^3)	Effect of Concern		Uncertainty Factor		
				Oral	Inhalation	Oral	Inhalation	Source
INORGANICS								
Antimony	4.0×10^{-4}	ND	NA	Taste threshold	Nasal Cavity Rhinitis	1	30	a,b
Arsenic	3.0×10^{-4}	ND	ND	Keratosis; hyperpigmentation	ND	3	ND	a
Barium	7.0×10^{-2}	1.43×10^{-4}	5.0×10^{-4}	Increased blood pressure	Fetotoxicity	3	1000	a,b
Beryllium	5.0×10^{-3}	ND	ND	None observed	ND	100	ND	a
Cadmium (food)	1.0×1^{-5}	ND	ND	Renal damage	Cancer	10	ND	a
Cadmium (water)	5.0×10^{-4}	ND	ND	Renal damage	Cancer	10	NC	a
Cyanide	2.0×10^{-2}	ND	ND	Weight loss, thyroid effects, myelin degradation	ND	100	ND	a
Lead (Inorganic)	ND[g]	ND	ND	CNS effects	CNS effects	ND	ND	a
Manganese (oral & food)	1.4×10^{-1}	1.1×10^{-4}[a]	4.0×10^{-4}	No effects	ND	1	ND	a
Selenium	5.0×10^{-3}	ND	ND	Selenosis	ND	3	ND	a
Thallium	7.0×10^{-5}	ND	ND	Increased SGOT and serum LDH levels; alopecia	ND	3000	ND	a
VOLATILES								
1,1,2-Trichlorotrifluoromethane	3.0×10^{-1}	ND	ND	Survival/Histopathology	ND	1000	ND	e
1,2-Diethylbenzene	ND	ND	ND	ND	ND	ND	ND	f
1,4-Dioxane	ND	ND	ND	ND	ND	ND	ND	f

See footnotes at end of table

TABLE B.2-7
(Continued)

Parameter	Chronic Oral Reference Dose (mg/kg-day)	Chronic Inhalation Reference Dose[a] (mg/kg-day)	Reference Concentration (mg/m³)	Effect of Concern		Uncertainty Factor		
				Oral	Inhalation	Oral	Inhalation	Source
SEMIVOLATILES								
2-Methylnapthalene	ND	ND	ND	ND	ND	ND	ND	f
4-Methylphenol(p-cresol)	5.0×10^{-3}	ND[j]	ND	Reduced body weight gain; neurotoxicity	ND	1000	ND	a,b
Benzo(a)anthracene	ND	ND[j]	ND	ND	ND	ND	ND	f
Benzo(a)pyrene	ND	ND	ND	ND	ND	ND	ND	f
Benzo(b)fluoranthene	ND	ND	ND	ND	ND	ND	ND	f
Benzo(g,h,i)perylene	ND	ND	ND	ND	ND	ND	ND	f
Benzo(k)fluoranthene	ND	ND	ND	ND	ND	ND	ND	f
Bis(2-Ethylhexyl)phthalate	2.0×10^{-2}	ND	ND	ND	ND	ND	ND	f
Carbazole	ND	ND	ND	ND	ND	ND	ND	f
Dibenzo(a,h)anthracene	ND	ND	ND	ND	ND	ND	ND	f
Indeno(1,2,3-cd)pyrene	ND	ND	ND	ND	ND	ND	ND	f
Phenanthrene	ND	ND	ND	ND	ND	ND	ND	f
Tributyl phosphate	5.0×10^{-3}	ND	ND	ND	ND	ND	ND	f
PESTICIDES/PCBS								
Aroclor-1254	ND	ND	ND	ND	ND	ND	ND	f
Aroclor-1260	ND	ND	ND	ND	ND	ND	ND	f
Dieldrin	5.0×10^{-5}	ND	ND	Liver lesions	ND	100	ND	f
Heptachlorodibenzofuran	ND	ND	ND	ND	ND	ND	ND	f
Heptachlorodibenzo-p-dioxin	ND	ND	ND	ND	ND	ND	ND	f
Octaclorodibenzo-p-dioxin	ND	ND	ND	ND	ND	ND	ND	f

5894

See footnotes at end of table

58.94

TABLE B.2-7
(Continued)

Parameter	Chronic Oral Reference Dose (mg/kg-day)	Chronic Inhalation Reference Dose[a] (mg/kg-day)	Reference Concentration (mg/m³)	Effect of Concern		Uncertainty Factor		
				Oral	Inhalation	Oral	Inhalation	Source
PESTICIDES/PCBS (Continued)								
Tetrachlorodibenzofuran	ND	ND	ND	ND	ND	ND	ND	f

[a]EPA *1992a*, IRIS database 1993, July 1993.
[b]EPA *1992b*, HEAST, Annual FY-1992.
[c]The EPA RfD Work Group considers it inappropriate to develop a RfD for inorganic lead (1985).
[d]The health effects data for 4-methyphenol were reviewed by the EPA RfD/RfC work group and were determined to be inadequate for the derivation of an inhalation RfC (EPA 1993).
[e]EPA ~~Fris~~ *IRIS* database 1993, February 1993.
[f]EPA ~~Fris~~ *IRIS* database 1994, May 1994.
CNS = Central nervous system
ND = No data available

Comment No. 191, 192, 193 and 194 (OEPA), *No. 48*

lack of data are placed in Group D, and those for which there is evidence of noncarcinogenicity in humans are placed in Group E.

The cancer slope factor is the toxicity value used to quantitatively express the carcinogenic risk of cancer-causing constituents. It is defined as the upper-bound estimate of the probability of cancer incidence per unit dose averaged over a lifetime. Slope factors are derived from studies of carcinogenicity in humans and/or laboratory animals and are typically calculated for compounds in Groups A, B1, and B2. Slope factors are specific to a chemical and route of exposure and expressed in units of $(mg/kg\text{-}day)^{-1}$ for both oral and inhalation routes. The induction of cancer by dermal absorption is evaluated using oral slope factors. Inhalation cancer toxicity values are usually expressed as inhalation unit risks in units of reciprocal $\mu g/m^3$ ($1/\mu g/m^3$). Because cancer risk characterization requires an estimate of reciprocal dose in units of 1/mg/kg-day, the inhalation unit risk must be converted to the mathematical equivalent of an inhalation cancer slope factor, or risk per unit dose (mg/kg-day). This is done by assuming humans weigh 70 kg and inhale 20 m^3 of air/day (i.e., the inhalation unit risk ($1/\mu g/m^3$) divided by 20 m^3/day, multiplied by 70 kg and multiplied by 1000 $\mu g/mg$ yields the mathematical equivalent of an inhalation slope factor (1/mg/kg-day)). Slope factors for CPCs are presented in Table B.2-8. The primary sources of these toxicity values are
No. 48 EPA's IRIS (EPA ~~1993~~ *1992*a) and the quarterly updated HEAST (EPA 1993b). Other EPA sources of cancer slope factors were also consulted when available. Surrogate chemicals were not used for cancer slope factor derivation unless the chemical similarity was close and the derivation was highly defensible.

The following exceptions, where information from one chemical was used to model a compound class, are noted:

- The carcinogenicity of all polychlorinated biphenyl (PCB) isomers is assumed to be equal to the carcinogenicity of Aroclor-1260 because dose-response data for other isomers are inconclusive.
- The carcinogenicity of dioxins and furans are determined using EPA's revised 1989 "Toxicity Equivalency Factors" (TEF) (EPA 1990e). These TEFs were determined with the basic assumption that all dioxins and furans are carcinogenic.
- The carcinogenicity of PAHs is determined initially using the benzo(a)pyrene cancer slope factors, and refined using a relative potency approach (Clement 1988, 1990).

TABLE B.2-8

CANCER SLOPE FACTORS FOR CARCINOGENIC CHEMICALS

Parameter	Oral Cancer Slope Factor (mg/kg-day)$^{-1}$	Inhalation Cancer Slope Factor[a] (mg/kg-day)$^{-1}$	Tumor Site		Cancer Classification	Source
			Oral	Inhalation		
RADIOLOGICAL						
Cesium-137+1d	2.8×10^{-11}	1.9×10^{-11}	ND	ND	A	n
Neptunium-237+1d	2.2×10^{-10}	2.9×10^{-8}	ND	ND	A	n
Lead-210+2d	6.6×10^{-10}	4.0×10^{-9}	ND	ND	A	n
Plutonium-238	2.2×10^{-10}	3.9×10^{-8}	Neoplasms/Lung tumors	ND	A	n
Plutonium-239/240	2.3×10^{-10}	3.8×10^{-8}	ND	ND	A	n
Radium-224	3.8×10^{-11}	1.2×10^{-9}	Bone/Cancer/ Pananasal Sinus	ND	A	n
Radium-226+8d	7.8×10^{-10}	7.0×10^{-9}	ND	ND	A	n
Radium-228+1d	1.0×10^{-10}	6.9×10^{-10}	ND	ND	A	n
Ruthenium-106	9.5×10^{-12}	4.4×10^{-10}	ND	ND	A	n
Strontium-90+1d	3.6×10^{-11}	6.2×10^{-11}	ND	ND	A	n
Technetium-99	1.3×10^{-12}	8.3×10^{-12}	ND	ND	A	n
Thorium-228+7d	5.5×10^{-11}	7.8×10^{-8}	ND	ND	A	n
Thorium-230	1.3×10^{-11}	2.9×10^{-8}	ND	ND	A	n
Thorium-232-10d	1.7×10^{-10}	1.1×10^{-7}	ND	ND	A	n
Thorium-total	ND	ND	ND	ND	A	n
Uranium-234	1.6×10^{-11}	2.6×10^{-8}	Bone Sarcomer	ND	A	n
Uranium-235	1.6×10^{-11}	2.5×10^{-8}	ND	ND	A	n
Uranium-235/236	1.6×10^{-11}	2.5×10^{-8}	ND	ND	A	n
Uranium-238+2d	2.8×10^{-11}	5.2×10^{-8}	ND	ND	A	n
Uranium-total	ND	ND	ND	ND	A	n
INORGANICS						
Antimony	ND	ND	ND	ND	ND	b
Arsenic	$1.75 \times 10^{+00}$	$1.5 \times 10^{+1}$	Sin, Lung	Respiratory System	A	b,c
Barium	ND	ND	ND	ND	ND	b,g

See footnotes at end of table

TABLE B.2-8
(Continued)

Parameter	Oral Cancer Slope Factor $(mg/kg\text{-}day)^{-1}$	Inhalation Cancer Slope Factor[a] $(mg/kg\text{-}day)^{-1}$	Tumor Site		Cancer Classification	Source
			Oral	Inhalation		
INORGANICS (Continued)						
Beryllium	$4.3 \times 10^{+0}$	$8.4 \times 10^{+0}$	Total Tumors	Lung	B2	b
Cadmium	ND	$6.3 \times 10^{+0}$	ND	Respiratory System	A	b,c
Lead (Inorganic)	ND	ND	ND	ND	B2	b
Nickel	ND	8.4×10^{-1}	ND	Respiratory System	A	b,g
Selenium	ND	ND	Liver, Lung	ND	B2	b
Thallium	ND[i]	ND	ND	ND	D	b
VOLATILES						
1,1,2-Trichlorotrifluoromethane	ND	ND	ND	ND	ND	k
1,2-Diethylbenzene	ND	ND	ND	ND	ND	k
1,4-Dioxane	1.1×10^{-2}	ND	Nasal cavity/Liver	ND	B2	j
SEMIVOLATILES						
2-Methylnapthalene	ND	ND	ND	ND	ND	ND
4-Methylphenol(o-cresol)	ND	ND	ND	ND	C	b
Benzo(a)anthracene	7.3×10^{-1}	6.1×10^{-1}	ND	Pulmonary adenomas	B2	d,f
Benzo(a)pyrene	$7.3 \times 10^{+0}$	6.1×10^{-0}	ND	Total tumors	B2	j
Benzo(b)fluoranthene	7.3×10^{-1}	6.1×10^{-1}	ND	Lung	B2	j
Benzo(g,h,i)perylene	ND	ND	ND	ND	D	j
Benzo()fluoranthene	7.3×10^{-2}	6.1×10^{-2}	ND	ND	B2	j
Bis(2-Ethylhexyl)phthalate	1.4×10^{-2}	ND				j
Carbazole	2.0×10^{-2}	ND	ND	ND	ND	ND
Dibenzo(a,h)anthracene	$7.3 \times 10^{+0}$	$6.1 \times 10^{+1}$	ND	ND	ND	ND
Indeno(1,2,3-cd)pyrene	7.3×10^{-1}	6.1×10^{-1}	ND	ND	ND	j
Phenanthrene	ND	ND	ND	ND	ND	j
Tributyl phosphate	ND	ND	ND	ND	ND	j

See footnotes at end of table

TABLE B.2-8
(Continued)

Parameter	Oral Cancer Slope Factor (mg/kg-day)$^{-1}$	Inhalation Cancer Slope Factor[a] (mg/kg-day)$^{-1}$	Tumor Site		Cancer Classification	Source
			Oral	Inhalation		
PESTICIDES / PCBS						
Aroclor-1254	$7.70 \times 10^{+0}$	ND	Liver	ND	B2	m
Aroclor-1260	$7.70 \times 10^{+0}$	ND	Liver	ND	B2	m
Dieldrin	$1.60 \times 10^{+1}$	$1.60 \times 10^{+1}$	Liver/Lung	ND	B2	k
Heptachlorodibenzofuran[i]	$1.5 \times 10^{+4}$	$1.5 \times 10^{+4}$	ND	ND	ND	ND
Heptachlorodibenzo-p-dioxin[j]	$1.5 \times 10^{+4}$	$1.5 \times 10^{+4}$	ND	ND	ND	ND
Octaclorodibenzo-p-dioxin[j]	$1.50 \times 10^{+2}$	$1.50 \times 10^{+2}$	ND	ND	ND	ND
Tetrachlorodibenzofuran[j]	$1.5 \times 10^{+3}$	$1.5 \times 10^{+3}$	ND	ND	ND	ND

[a]Where only a unit risk for inhalation is available derived by assuming a 70 g adult inhales 20m^3 of air/day.
[b]EPA IRIS database ***(EPA 1992a)***
[c]The HEAST (1992*b*) presented an inhalation slope factor of 50 (mg/g-day)-1, based on absorbed dose (absorption factor of 0.3). A risk of 15 (mg/g-day)$^{-1}$ based on ambient dose is the value used in this risk assessment.
[d]EPA, HEAST, Annual FY-1991
[e]No data presented for chemically induced carcinogenicity - radiocarcinogenicity of uranium isotopes are discussed elsewhere.
[f]Slope factors for benzo(a)pyrene used for B2 PAHs.
[g]EPA, HEAST, Annual FY 1992.
[h]Derived from the proposed inorganic arsenic ingestion unit risk [5×10^{-5} (μg/l)$^{-1}$]. "The uncertainties associated with ingested inorganic arsenic are such that estimates could be revised downward as much as an order of magnitude, relative to the risk estimates associated with most other carcinogens" (EPA 1993).
[i]Not classified or not classifiable as to human carcinogenicity.
[j]For polychlorinated dibenzo-p-dioxin and polychlorinated dibenzofurans, the 2, 3, 7, 8-TCDD toxicity equivalents will be calculated using the appropriate 1-TEFS/89 (1989 EPA Interim) Toxicity Equivalent Factor (EPA ~~1989~~ ***1990e***).
EPA Iris database 1994, May 1994
[l]EPA Iris database 1991, January 1991
[m]EPA Iris database 1994, September 1991
[n]EPA HEAST 1993
ND = No data available

Comment No. 195 and 196 (OEPA), ***No. 48***

5894

TABLE B.2-12
(Continued)

Chemical	Gastrointestinal Absorption Fraction	Dermal Reference Dose (mg/kg-day)	Dermal Slope Factor $(mg/kg\text{-}day)^{-1}$
SEMIVOLATILES (Continued)			
Phenanthrene	0.9[e]	ND	ND
Tributyl phosphate	0.9[e]	4.50×10^{-3}	ND
PESTICIDE/PCBS			
Dioxins/furans	0.5[h]	ND	3.00×10^{5}

[a]See the Toxicity Profile for this chemical in Attachment II.

[b]ND - Not derived.

[c]EPA 1989a, "Risk Assessment Guidance for Superfund, Volume, Human Health Evaluation Manual (Part A)", EPA/540/1-89/002, pp. A-2 to A-3.

[d]The carcinogenicity of uranium is due to its radioactivity rather than chemical toxicity; its cancer potency due to penetrating external radiation is presented in Table B.2-11.

[e]Section B.2.5.2.

[f]Jones, T.D. and B.A. Owen, 1989, "Health Risks from Mixtures of Radionuclides and Chemicals in Drinking Water", Oak Ridge National Laboratory, Oak Ridge, Tennessee, ORNL-6533.

[g]EPA 1993a, Memorandum from ECAO to EPA Region V, 7/21/93, including Attachments 1-6.

[h]ATSDR 1990*a*, "Toxicological Profile for 2,3,7,8-Tetrachlorodibenzo-p-dioxin," Draft for Public Comment, U.S. Public Health Service, Atlanta, Georgia.

[k]NA - Not appropriate

Comment No. 48

In compliance with EPA guidance (EPA 1989a), the noncarcinogenic HIs summed across pathways were compared to "unity." An HI of unity (or 1.0) indicates that the exposure intake is equal to the RfD. If the HI is greater than 1.0 or "above unity," there is concern for potential health effects. Major categories of noncarcinogenic health effects include neurotoxicity, developmental toxicity, reproductive toxicity, immunotoxicity, and adverse effects on target organs, such as hepatic, renal, *No. 48* respiratory, cardiovascular, and dermal/ocular problems (EPA 1989~~d~~ *f*).

B.2.6.4 Risk Characterization for Background

All site-related risks in the risk assessment are calculated without subtracting the contribution from natural background. In some areas in Operable Unit 2, the concentrations of CPCs are only slightly above background levels. Therefore, it is important to calculate the risks from background contributions to provide a point of comparison for the site-related risk estimates.

Many of the constituents selected as CPCs for Operable Unit 2 are naturally occurring. Therefore, it is informative to estimate what the risk due to these CPCs might be if they were present within each subunit at naturally occurring, or background, concentrations.

Calculation of background risks of CPCs used one of two methods. Figure B.2-7 illustrates how the exposure point concentrations for each subunit were chosen. Background risks associated with direct contact to CPCs present in soil or groundwater were estimated using a proportion based on the assumption that the relationship between risk/hazard and CPC concentration in groundwater or soil is linear, such that:

$$R_B = \frac{R_S \times C_B}{C_S}$$

where:

C_S = on-site constituent concentration

C_B = background constituent concentration

R_S = on-site carcinogenic risk or non-carcinogenic hazard

R_B = background carcinogenic risk or non-carcinogenic hazard

This is because there is often no scientific data indicating the amount of a contaminant absorbed across skin, the amount of soil and water that is likely to contact skin, or, the surface area likely to be exposed.

Many of the quantities used to calculate exposures and risks in this report are selected from a distribution of possible values. For the RME scenarios, the value representing the 95th percentile is generally selected for each parameter to assure that the assessment bounds the actual risks from a postulated exposure. This risk number is used in risk management decisions, but does not indicate what a more average exposure might be, or what risk range might be expected for individuals in the exposed population. To address these issues, a risk estimate closer to the CT is presented for the maximally exposed individual using the CT scenario. The range of risk for this receptor from the CT scenario to the RME scenario seeks to incorporate the range of uncertainty regarding intake
No. B-49 assumptions for this receptor. Parameter values selected for the CT and RME resident farmer scenario are listed together on Table B 2-4. Generally, the CT farmer is assumed to be present on the site for fewer years (9 vs 70 yrs) and for fewer days each year (234 vs 350 days/yr); to inhale particulates for fewer hours per day (4.9 vs 5.7 hrs/day); to ingest less water per day (1.4 vs 2.0 L/day); to absorb contaminants in water in water over a smaller area while bathing (20,000 vs 23,000 cm^2); to ingest less soil (100 vs 180 mg/day); to absorb contaminants in soil over a smaller area (5,000 vs 5,750 cm^2); to spend more time indoors (19.8 vs 18.3 hrs/day); to ingest less homegrown vegetables and fruit (0.05 and 0.02 vs 0.04 and 0.08); to ingest a smaller amount of homegrown meat products (0.05 vs 0.08 kg/day); and to ingest less milk (0.16 vs 0.3 L/day).

B.2.7.6 Uncertainty in Toxicity Assessment

Uncertainty associated with the toxicity assessment is associated with hazard assessment and dose-response evaluations for CPCs. The hazard assessment deals with characterizing the nature and strength of the evidence of causation, or the likelihood that a chemical that induces adverse effects in animals will induce adverse effects in humans. Hazard assessment of carcinogenicity is evaluated as a weight-of-evidence determination, using either the IARC (1987) or EPA (1986b) methods. Positive animal cancer test data suggest that humans contain tissue(s) that may also manifest a carcinogenic response; however, the animal data cannot necessarily be used to predict the target tissue in humans. In the hazard assessment of noncancer effects, however, positive animal data suggest the nature of the
No. 48 effects (i.e., the target tissues and type of effects) anticipated in humans (EPA 1989e *f*).

TABLE B.3.1-1

ACTIVE FLYASH PILE EXPOSURE POINT CONCENTRATIONS FOR SCENARIOS EVALUATED

Current Land Use	Receptor	Direct Contact Medium	Route of Exposure	Exposure Point Concentration
Current Access Controls (current use of FEMP continues, DOE ownership)	Trespassing Youth	surface soil	incidental ingestion dermal contact external radiation	surface flyash material within subunit
		air	inhalation of particulates, volatiles, radionuclides, and gases	maximum estimated on-subunit current concentration derived from airborne surface flyash material air modeling results
		surface water	incidental ingestion dermal contact	single surface water within subunit
		sediment	ingestion dermal contact external radiation	sediment within subunit
	Off-Property Resident Farmer (adult and child), homegrown produce off-property, livestock grazing off-property	air	inhalation of particulates, volatiles, and gases	maximum estimated off-property current concentrations derived from airborne surface flyash material air modeling concentrations
		plants (homegrown produce)	ingestion of fruits and vegetables	maximum estimated off-property current concentrations derived from deposited airborne surface flyash material air modeling results
		livestock (grazing at property boundary)	ingestion of milk and beef	maximum estimated off-property current concentrations derived from deposited airborne surface flyash material air modeling results
	Groundskeeper	air	inhalation particulates, volatiles, and gases	maximum estimated on-subunit current concentration derived from air modeling
		surface soil	ingestion dermal contact external radiation	surface flyash material within subunit

TABLE B.3.1-1
(Continued)

Current Land Use	Receptor		Direct Contact Medium	Route of Exposure	Exposure Point Concentration
Current with Access Controls (current use of FEMP continues, DOE ownership) (continued)	Great Miami River Users	Recreational User	surface water	ingestion dermal contact	estimated concentrations in the Great Miami River
			fish	ingestion	estimated concentrations in the Great Miami River
		Agricultural User	plants (homegrown produce irrigated with water from Great Miami River)	ingestion of fruit and vegetables	estimated concentrations in the Great Miami River
			livestock (grazing on crops irrigated with water from Great Miami River)	ingestion of beef and milk	estimated concentrations in the Great Miami River
		Residential User	surface water	ingestion dermal contact inhalation of particulates, volatiles, and gases	estimated concentrations in the Great Miami River
Current without Access Controls (current use of FEMP continues)	User of Meat and Milk Products		livestock grazing on-property	ingestion of milk and beef	maximum estimated on-property current concentrations derived from deposited airborne surface flyash material modeling results

000229

5894

TABLE B.3.1-1
(Continued)

Future Land Use	Receptor	Direct Contact Medium	Route of Exposure	Exposure Point Concentration
Federal Ownership	Future Off-Property Farmer (adult and child), homegrown produce off-property, livestock grazing off-property, groundwater off-property	air	inhalation of particulates, volatiles, and gases	maximum estimated off-property future concentrations derived from airborne surface flyash material air modeling results
		plants (homegrown produce)	ingestion of fruits and vegetables	maximum estimated off-property future concentrations derived from deposited airborne surface flaysh material air modeling and groundwater modeling results
		livestock (grazing at property boundary)	ingestion of milk and beef	maximum estimated off-property future concentrations derived from deposited airborne surface flyash material air modeling and groundwater modeling results
		groundwater	ingestion dermal contact inhalation of volatiles released during household use	modeled groundwater concentrations off-site at time when contamination is greatest in the ~~South Field and~~ Active Flyash Pile
	Expanded Trespasser (youth)	air	inhalation of particulates, radionuclides, volatiles, and gases	maximum estimated on-subunit airborne surface flyash material air modeling results
		surface water	incidental ingestion dermal contact	surface water within subunit
		sediment	incidental ingestion dermal contact external radiation	sediment within subunit
		surface soil	incidental ingestion dermal contact external radiation	surface flyash material within subunit

000230

5894

TABLE B.3.1-1
(Continued)

Future Land Use	Receptor		Direct Contact Medium	Route of Exposure	Exposure Point Concentration
Federal Ownership (Continued)	Great Miami River Users	Recreational User	surface water	ingestion dermal contact	estimated concentrations in the Great Miami River
			fish	ingestion	estimated concentrations in the Great Miami River
		Agricultural User	plants (homegrown produce irrigated with water from Great Miami River)	ingestion of fruits and vegetables	estimated concentrations in the Great Miami River
			livestock (grazing on crops irrigated with water from Great Miami River)	ingestion of beef and milk	estimated concentrations in the Great Miami River
		Residential User	surface water	ingestion dermal contact inhalation of particulates, volatiles, and gases	estimated concentrations in the Great Miami River
Without Federal Ownership	*Future Off-Property Farmer (adult and child), homegrown produce off-property, livestock grazing off-property, groundwater off-property*		*air*	*inhalation of particulates, volatiles, and gases*	*maximum estimated off-property future concentrations derived from airborne surface flyash material air modeling results*
			plants (homegrown produce)	*ingestion of fruits and vegetables*	*maximum estimated off-property future concentrations derived from deposited airborne surface flaysh material air modeling and groundwater modeling results*
			livestock (grazing at property boundary)	*ingestion of milk and beef*	*maximum estimated off-property future concentrations derived from deposited airborne surface flyash material air modeling and groundwater modeling results*
			groundwater	*ingestion* *dermal contact* *inhalation of volatiles released during household use*	*modeled groundwater concentrations off-site at time when contamination is greatest in the ~~South Field and~~ Active Flyash Pile*

TABLE B.3.1-1
(Continued)

Future Land Use	Receptor	Direct Contact Medium	Route of Exposure	Exposure Point Concentration
Without Federal Ownership (Continued)	Future On-Property Resident Farmer (adult and child), located adjacent to the subunit, homegrown produce on-property, livestock grazing on-property, groundwater on-property, RME and CT estimates	air	inhalation of particulates, volatiles, gases, and indoor radon	maximum estimated on-property future concentrations from airborne surface flyash material modeling results; indoor radon emissions quantitated
		plants (homegrown produce)	ingestion of fruits and vegetables	maximum estimated on-property future concentrations derived from deposited airborne surface flyash material air modeling and groundwater modeling results
		livestock (grazing on property)	ingestion of milk and beef	maximum estimated on-property subunit future concentrations derived from deposited airborne surface flyash material air modeling and groundwater modeling results
		groundwater	incidental ingestion dermal contact inhalation of volatiles during household use	modeled groundwater concentrations underlying Active Flyash Pile at time when concentration is greatest
	Future On-Property Resident Farmer (adult and child), located adjacent to the subunit, homegrown produce on-property, livestock grazing on-property, groundwater on-property, RME and CT estimates (continued)	surface soil	incidental ingestion dermal contact external radiation	not quantitated; farmer is living and farming adjacent to subunit and therefore, not in direct contact with surface soil
	Future Homebuilder	waste material/subsurface soil	external radiation incidental ingestion dermal contact	not quantitated; no building on the Active Flyash Pile anticipated
		air	inhalation of particulates, volatiles, and gases	not quantitated; no building on the Active Flyash Pile anticipated

5894

TABLE B.3.1-1
(Continued)

Future Land Use	Receptor	Direct Contact Medium	Route of Exposure	Exposure Point Concentration
Without Federal Ownership (Continued)	Future Perched Groundwater User, homegrown produce on-subunit, livestock grazing on-subunit, groundwater on-property (Solid Waste Landfill and Lime Sludge Ponds only)	air	inhalation of particulates, volatiles, gases, and indoor radon	maximum estimated on-property future concentrations from airborne surface flyash material modeling results; indoor radon emissions quantitated
		plants (homegrown produce)	ingestion of fruits and vegetables	maximum estimated on-property future concentrations derived from deposited airborne surface flyash material air modeling and groundwater modeling results
		livestock (grazing on property)	ingestion of milk and beef	maximum estimated on-property subunit future concentrations derived from deposited airborne surface flyash material air modeling and groundwater modeling results
		perched groundwater directly underlying subunit	ingestion, dermal contact, and inhalation of volatiles released during household use	not quantitated; no perched groundwater at Active Flyash Pile
		soil	incidental ingestion dermal contact external radiation	not quantitated; no building on the Active Flyash Pile anticipated

Comment No. 49

000233

5894

modeling results as described in the methodology section and in Appendix A and Section 5.0 of this RI report.

NO. B-60, NO. B-61, NO. B-224 *No. 60* The risks and hazards calculated for the trespassing youth exposed to contaminants in surface soil are presented in Table B.3.1-4 (Attachment B.III). Total risk due to exposure to all CPCs in surface *soil* by all routes of exposure is ~~6.8×10^{-5}~~ 2.6×10^{-5}. This is primarily due to external radiation from radium-226, radium-228, thorium-228, thorium-232, and arsenic in surface soil for which risks of ~~7.9×10^{-6}, 2.6×10^{-6}, and 6.1×10^{-6}~~ 6.0×10^{-6}, 2.0×10^{-6}, 4.6×10^{-6}, 4.9×10^{-6}, and 2.1×10^{-6} were calculated, respectively. Additionally, risk from radium-226 (2.0×10^{-6}) and arsenic (1.0×10^{-6}) in sediment also contributed significant to the total risk. Total chemical hazards calculated for a trespassing youth exposed to CPCs from active flyash material did not exceed a HI of 1.0.

NO. B-224 Risks and hazards due to exposure to surface water for this receptor are presented in Table B.3.1-5 (Attachment B.III). Total risk due to exposure to all CPCs in surface water did not exceed the ~~10^{-6}~~ 1.0×10^{-6} ~~risk level for any single pathway or for all pathways combined~~. Total HI for surface water was well ~~blow~~ below 1.0. ~~Sediment was not assessed since no sediment samples were available from within the Active Flyash Pile battery limits.~~

B.3.1.3.2 Current Off-Property Farmers

NO. B-224 Risk was characterized for the current off-property farmer and resident child contacting CPCs via inhalation of airborne particulates, ingestion of contaminants in airborne particulates via ~~their~~ deposition on homegrown produce, and ~~their~~ uptake in milk or beef from livestock grazing on particulates deposited on off-site grasses. For all of these routes of exposure, the exposure point concentration was based on air modeling results as described in Section B.2.0 of this appendix and Appendix A and Section 5.0 of this RI report.

Risks and hazards due to surface soil ~~are~~ calculated for the current off-property farmer and resident child are presented in Tables B.3.1-6 and B.3.1-7, respectively (Attachment B.III). The risk and HI associated with inhalation of all CPCs in airborne soil particulates was ~~1.8×10^{-7}~~ 1.7×10^{-7} and much less than 1.0 for the farmer, respectively. The risk and HI calculated for the off-property resident child were ~~9.5×10^{-9}~~ 7.6×10^{-9} and much less than 1.0, respectively.

000234

TABLE B.3.1-28
CURRENT LAND USE
ACTIVE FLYASH PILE
SUMMARY OF TOTAL CARCINOGENIC RISK

Medium	Parameter	Trespassing Youth	% Total Medium Risk	% Total Receptor Risk	Off-Property Resident Farmer	% Total Medium Risk	% Total Receptor Risk	Off-Property Resident Child	% Total Medium Risk	% Total Receptor Risk	User of Milk and Meat	% Total Medium Risk	% Total Receptor Risk
Soil	CS-137	3.9E-07	1.88%	1.54%	1.5E-12	0.00%	0.00%	2.7E-14	0.00%	0.00%	N/A		
	NP-237	5.2E-07	2.49%	2.04%	1.4E-08	8.00%	2.88%	2.5E-10	3.29%	0.38%	N/A		
	PU-238	2.5E-09	0.01%	0.01%	2.4E-09	1.37%	0.49%	4.3E-11	0.56%	0.07%	N/A		
	PU-239/240	1.2E-09	0.01%	0.00%	1.1E-09	0.63%	0.23%	2.0E-11	0.26%	0.03%	N/A		
	RA-226	6.0E-06	28.49%	23.27%	2.8E-09	1.62%	0.58%	5.1E-11	0.67%	0.08%	N/A		
	RA-228	2.0E-06	9.42%	7.69%	1.9E-10	0.11%	0.04%	3.5E-12	0.05%	0.01%	N/A		
	SR-90	1.9E-09	0.01%	0.01%	2.4E-11	0.01%	0.01%	4.4E-13	0.01%	0.00%	N/A		
	TH-228	4.6E-06	21.86%	17.85%	2.6E-08	14.88%	5.35%	4.7E-10	6.12%	0.71%	N/A		
	TH-230	2.8E-09	0.01%	0.01%	8.9E-09	5.18%	1.86%	1.6E-10	2.13%	0.25%	N/A		
	TH-232	4.9E-06	23.29%	19.02%	2.6E-08	14.92%	5.37%	4.7E-10	6.14%	0.71%	N/A		
	U-234	2.7E-09	0.01%	0.01%	8.1E-09	4.70%	1.69%	1.5E-10	1.93%	0.22%	N/A		
	U-235/236	8.3E-09	0.04%	0.03%	3.5E-10	0.20%	0.07%	6.3E-12	0.08%	0.01%	N/A		
	U-238	3.3E-08	0.16%	0.13%	1.6E-08	9.39%	3.38%	2.9E-10	3.87%	0.45%	N/A		
	Total Radiologic Risk	1.8E-05	87.68%	71.61%	1.1E-07	61.02%	21.95%	1.9E-09	25.12%	2.89%			
	Arsenic	2.1E-06	10.13%	8.27%	6.5E-08	37.85%	13.61%	5.5E-09	72.70%	8.37%	N/A		
	Beryllium	4.3E-07	2.08%	1.70%	1.9E-09	1.11%	0.40%	1.6E-10	2.13%	0.25%	N/A		
	Benzo(a)anthracene	1.7E-09	0.01%	0.01%	3.3E-12	0.00%	0.00%	2.8E-13	0.00%	0.00%	N/A		
	Benzo(a)pyrene	1.9E-08	0.09%	0.07%	3.6E-11	0.02%	0.01%	3.0E-12	0.04%	0.00%	N/A		
	Benzo(b)fluoranthene	2.8E-09	0.01%	0.01%	5.3E-12	0.00%	0.00%	4.5E-13	0.01%	0.00%	N/A		
	Total Chemical Risk	2.6E-06	12.32%	10.06%	6.7E-08	38.98%	14.02%	5.7E-09	74.88%	8.62%			
	TOTAL	2.1E-05	100.00%	81.67%	1.7E-07	100.00%	35.97%	7.6E-09	100.00%	11.52%			
Surface Water	NP-237	1.2E-07	17.41%	0.47%	N/A			N/A			N/A		
	PU-238	8.2E-10	0.12%	0.00%	N/A			N/A			N/A		
	PU-239/240	3.9E-10	0.06%	0.00%	N/A			N/A			N/A		
	RA-226	1.7E-08	2.51%	0.07%	N/A			N/A			N/A		
	RA-228	1.5E-09	0.22%	0.01%	N/A			N/A			N/A		
	SR-90	7.8E-10	0.11%	0.00%	N/A			N/A			N/A		
	U-234	1.8E-08	2.59%	0.07%	N/A			N/A			N/A		
	U-235/236	8.0E-10	0.12%	0.00%	N/A			N/A			N/A		
	U-238	3.1E-08	4.53%	0.12%	N/A			N/A			N/A		
	Total Radiologic Risk	1.9E-07	27.67%	0.75%									
	Arsenic	4.3E-07	61.45%	1.66%	N/A			N/A			N/A		
	Beryllium	7.5E-08	10.88%	0.29%	N/A			N/A			N/A		
	Total Chemical Risk	5.0E-07	72.33%	1.96%				N/A			N/A		
	TOTAL	6.9E-07	100.00%	2.71%									
GMR Surface Water	Arsenic	N/A			N/A			N/A			N/A		
	Total	N/A			N/A			N/A			N/A		
Sediment	NP-237	1.7E-07	4.19%	0.65%	N/A			N/A			N/A		
	PU-238	5.9E-10	0.01%	0.00%	N/A			N/A			N/A		
	PU-239/240	2.8E-10	0.01%	0.00%	N/A			N/A			N/A		
	RA-226	2.0E-06	49.86%	7.73%	N/A			N/A			N/A		
	RA-228	6.6E-07	16.58%	2.57%	N/A			N/A			N/A		
	SR-90	6.0E-10	0.02%	0.00%	N/A			N/A			N/A		
	U-234	2.0E-10	0.01%	0.00%	N/A			N/A			N/A		
	U-235/236	2.5E-09	0.06%	0.01%	N/A			N/A			N/A		
	U-238	8.6E-09	0.22%	0.03%	N/A			N/A			N/A		
	Total Radiologic Risk	2.8E-06	70.95%	11.01%									
	Arsenic	1.0E-06	25.60%	3.97%	N/A			N/A			N/A		
	Beryllium	1.4E-07	3.45%	0.53%	N/A			N/A			N/A		
	Total Chemical Risk	1.2E-06	29.05%	4.51%									
	TOTAL	4.0E-06	100.00%	15.51%									

FER\CRU2RI\ABQ\CAFP_COC.XLS; 8/31/94; 4:57 PM

000235

5894

Comment No. 43

TABLE B.3.1-28
(continued)

Medium	Parameter	Groundskeeper	% Total Medium Risk	% Total Receptor Risk	Great Miami River Rec. User	% Total Medium Risk	% Total Receptor Risk	Great Miami River Resid. User	% Total Medium Risk	% Total Receptor Risk	Great Miami River Ag. User	% Total Medium Risk	% Total Receptor Risk
Soil	CS-137	1.5E-06	1.86%	1.85%	N/A			N/A			N/A		
	NP-237	2.0E-06	2.54%	2.54%	N/A			N/A			N/A		
	PU-238	1.9E-08	0.02%	0.02%	N/A			N/A			N/A		
	PU-239/240	8.8E-09	0.01%	0.01%	N/A			N/A			N/A		
	RA-226	2.2E-05	28.28%	28.19%	N/A			N/A			N/A		
	RA-228	7.4E-06	9.30%	9.27%	N/A			N/A			N/A		
	SR-90	1.4E-08	0.02%	0.02%	N/A			N/A			N/A		
	TH-228	1.7E-05	21.59%	21.53%	N/A			N/A			N/A		
	TH-230	2.3E-08	0.03%	0.03%	N/A			N/A			N/A		
	TH-232	1.8E-05	23.02%	22.95%	N/A			N/A			N/A		
	U-234	2.2E-08	0.03%	0.03%	N/A			N/A			N/A		
	U-235/236	3.2E-08	0.04%	0.04%	N/A			N/A			N/A		
	U-238	1.5E-07	0.18%	0.18%	N/A			N/A			N/A		
	Total Radiologic Risk	6.9E-05	86.93%	86.66%									
	Arsenic	8.3E-06	10.46%	10.42%	N/A			N/A			N/A		
	Beryllium	2.0E-06	2.48%	2.48%	N/A			N/A			N/A		
	Benzo(a)anthracene	7.9E-09	0.01%	0.01%	N/A			N/A			N/A		
	Benzo(a)pyrene	8.6E-08	0.11%	0.11%	N/A			N/A			N/A		
	Benzo(b)fluoranthene	1.3E-08	0.02%	0.02%	N/A			N/A			N/A		
	Total Chemical Risk	1.0E-05	13.07%	13.03%									
	TOTAL	7.9E-05	100.00%	99.69%									
Surface Water	NP-237	N/A			N/A			N/A			N/A		
	PU-238	N/A			N/A			N/A			N/A		
	PU-239/240	N/A			N/A			N/A			N/A		
	RA-226	N/A			N/A			N/A			N/A		
	RA-228	N/A			N/A			N/A			N/A		
	SR-90	N/A			N/A			N/A			N/A		
	U-234	N/A			N/A			N/A			N/A		
	U-235/236	N/A			N/A			N/A			N/A		
	U-238	N/A			N/A			N/A			N/A		
	Total Radiologic Risk												
	Arsenic	N/A			N/A			N/A			N/A		
	Beryllium	N/A			N/A			N/A			N/A		
	Total Chemical Risk												
	TOTAL												
GMR Surface Water	Arsenic	N/A			1.4E-09	100.00%	100.00%	7.7E-09	100.00%	100.00%	N/A		
	Total	N/A			1.4E-09	100.00%	100.00%	7.7E-09	100.00%	100.00%	N/A		
Sediment	NP-237	N/A			N/A			N/A			N/A		
	PU-238	N/A			N/A			N/A			N/A		
	PU-239/240	N/A			N/A			N/A			N/A		
	RA-226	N/A			N/A			N/A			N/A		
	RA-228	N/A			N/A			N/A			N/A		
	SR-90	N/A			N/A			N/A			N/A		
	U-234	N/A			N/A			N/A			N/A		
	U-235/236	N/A			N/A			N/A			N/A		
	U-238	N/A			N/A			N/A			N/A		
	Total Radiologic Risk												
	Arsenic	N/A			N/A			N/A			N/A		
	Beryllium	N/A			N/A			N/A			N/A		
	Total Chemical Risk												
	TOTAL												

FER\CRU2RI\ABQ\CAFP_COC.XLS; 8/31/94; 4:57 PM

Comment No. 43

000226

5894

TABLE B.3.1-28
(continued)

Medium	Parameter	Trespassing Youth	% Total Medium Risk	% Total Receptor Risk	Off-Property Resident Farmer	% Total Medium Risk	% Total Receptor Risk	Off-Property Resident Child	% Total Medium Risk	% Total Receptor Risk	User of Milk and Meat	% Total Medium Risk	% Total Receptor Risk
Homegrown Produce (Dust Affected)	CS-137	N/A			*4.0E-11*	*0.03%*	*0.01%*	2.8E-12	0.01%	0.00%	N/A		
	NP-237	N/A			*1.3E-09*	*0.96%*	*0.28%*	9.5E-11	0.21%	0.14%	N/A		
	PU-238	N/A			*1.7E-10*	*0.12%*	*0.04%*	1.2E-11	0.03%	0.02%	N/A		
	PU-239/240	N/A			*8.4E-11*	*0.06%*	*0.02%*	5.9E-12	0.01%	0.01%	N/A		
	RA-226	N/A			*4.1E-09*	*2.89%*	*0.85%*	2.9E-10	0.65%	0.44%	N/A		
	RA-228	N/A			*3.5E-10*	*0.25%*	*0.07%*	2.5E-11	0.06%	0.04%	N/A		
	SR-90	N/A			*2.0E-10*	*0.14%*	*0.04%*	1.4E-11	0.03%	0.02%	N/A		
	TH-228	N/A			*2.3E-10*	*0.16%*	*0.05%*	1.6E-11	0.04%	0.02%	N/A		
	TH-230	N/A			*5.2E-11*	*0.04%*	*0.01%*	3.7E-12	0.01%	0.01%	N/A		
	TH-232	N/A			*5.2E-10*	*0.37%*	*0.11%*	3.6E-11	0.08%	0.06%	N/A		
	U-234	N/A			*6.4E-11*	*0.05%*	*0.01%*	4.5E-12	0.01%	0.01%	N/A		
	U-235/236	N/A			*2.8E-12*	*0.00%*	*0.00%*	2.0E-13	0.00%	0.00%	N/A		
	U-238	N/A			*1.1E-10*	*0.08%*	*0.02%*	7.8E-12	0.02%	0.01%			
	Total Radiologic Risk				*7.2E-09*	*5.15%*	*1.51%*	5.1E-10	1.15%	0.77%			
	Arsenic	N/A			1.2E-07	*84.85%*	*24.89%*	3.9E-08	88.43%	59.59%	N/A		
	Beryllium	N/A			1.3E-08	*9.51%*	*2.79%*	4.4E-09	9.91%	6.68%	N/A		
	Benzo(a)anthracene	N/A			5.3E-11	*0.04%*	*0.01%*	1.7E-11	0.04%	0.03%	N/A		
	Benzo(a)pyrene	N/A			5.6E-10	*0.40%*	*0.12%*	1.8E-10	0.42%	0.28%	N/A		
	Benzo(b)fluoranthene	N/A			8.4E-11	*0.06%*	*0.02%*	2.8E-11	0.06%	0.04%	N/A		
	Total Chemical Risk				1.3E-07	*94.85%*	*27.83%*	4.4E-08	98.85%	66.62%			
	TOTAL				*1.4E-07*	100.00%	*29.34%*	4.4E-08	100.00%	67.39%			
Homegrown Produce (GMR Surf. Water Affected)	Arsenic	N/A			N/A			N/A			N/A		
	Total												
Beef/Milk (Dust Affected)	CS-137	N/A			1.9E-10	0.41%	*0.04%*	2.4E-11	0.21%	0.04%	1.9E-09	0.41%	0.41%
	NP-237	N/A			6.1E-12	0.01%	*0.00%*	4.7E-13	0.00%	0.00%	6.1E-11	0.01%	0.01%
	PU-238	N/A			9.7E-15	0.00%	*0.00%*	1.0E-15	0.00%	0.00%	9.7E-14	0.00%	0.00%
	PU-239/240	N/A			5.1E-15	0.00%	*0.00%*	5.4E-16	0.00%	0.00%	5.1E-14	0.00%	0.00%
	RA-226	N/A			7.2E-10	1.54%	*0.15%*	1.3E-10	1.07%	0.19%	7.2E-09	1.54%	1.54%
	RA-228	N/A			4.1E-11	0.09%	*0.01%*	7.2E-12	0.06%	0.01%	4.1E-10	0.09%	0.09%
	SR-90	N/A			1.6E-10	0.34%	*0.03%*	2.9E-11	0.25%	0.04%	1.6E-09	0.34%	0.34%
	TH-228	N/A			3.1E-13	0.00%	*0.00%*	4.8E-14	0.00%	0.00%	3.1E-12	0.00%	0.00%
	TH-230	N/A			3.3E-13	0.00%	*0.00%*	5.2E-14	0.00%	0.00%	3.3E-12	0.00%	0.00%
	TH-232	N/A			3.3E-12	0.01%	*0.00%*	5.2E-13	0.00%	0.00%	3.3E-11	0.01%	0.01%
	U-234	N/A			8.9E-12	0.02%	*0.00%*	1.6E-12	0.01%	0.00%	8.9E-11	0.02%	0.02%
	U-235/236	N/A			4.0E-13	0.00%	*0.00%*	7.2E-14	0.00%	0.00%	4.0E-12	0.00%	0.00%
	U-238	N/A			1.6E-11	0.03%	*0.00%*	2.8E-12	0.02%	0.00%	1.6E-10	0.03%	0.03%
	Total Radiologic Risk				1.1E-09	2.45%	*0.24%*	1.9E-10	1.64%	0.29%	1.2E-08	2.45%	2.45%
	Arsenic	N/A			4.2E-08	88.56%	*8.65%*	9.8E-09	83.14%	14.80%	4.2E-07	88.55%	88.55%
	Beryllium	N/A			1.5E-09	3.27%	*0.32%*	2.4E-10	2.05%	0.37%	1.5E-08	3.26%	3.26%
	Benzo(a)anthracene	N/A			7.8E-11	0.17%	*0.02%*	4.5E-11	0.38%	0.07%	7.9E-10	0.17%	0.17%
	Benzo(a)pyrene	N/A			2.3E-09	4.82%	*0.47%*	1.3E-09	11.07%	1.97%	2.3E-08	4.83%	4.83%
	Benzo(b)fluoranthene	N/A			3.5E-10	0.74%	*0.07%*	2.0E-10	1.71%	0.30%	3.5E-09	0.74%	0.74%
	Total Chemical Risk				4.6E-08	97.55%	*9.53%*	1.2E-08	98.36%	17.51%	4.6E-07	97.55%	97.55%
	TOTAL				4.7E-08	100.00%	*9.77%*	1.2E-08	100.00%	17.80%	4.7E-07	100.00%	100.00%
Beef/Milk (GMR Surf. Water Affected)	Arsenic	N/A			N/A			N/A			N/A		
	Total												
Ambient Radon		2.9E-08			1.2E-07			2.2E-09			N/A		
ALL MEDIA		2.6E-05			*4.8E-07*			6.6E-08			4.7E-07		

FER\CRU2RI\ABQ\CAFP_COC.XLS; 8/31/94; 4:57 PM

000237

5 8 9 4

Comment No. 43

TABLE B.3.1-28
(continued)

Medium	Parameter	Groundskeeper	% Total Medium Risk	% Total Receptor Risk	Great Miami River Rec. User	% Total Medium Risk	% Total Receptor Risk	Great Miami River Resid. User	% Total Medium Risk	% Total Receptor Risk	Great Miami River Ag. User	% Total Medium Risk	% Total Receptor Risk
Homegrown Produce (Dust Affected)	CS-137	N/A			N/A			N/A			N/A		
	NP-237	N/A			N/A			N/A			N/A		
	PU-238	N/A			N/A			N/A			N/A		
	PU-239/240	N/A			N/A			N/A			N/A		
	RA-226	N/A			N/A			N/A			N/A		
	RA-228	N/A			N/A			N/A			N/A		
	SR-90	N/A			N/A			N/A			N/A		
	TH-228	N/A			N/A			N/A			N/A		
	TH-230	N/A			N/A			N/A			N/A		
	TH-232	N/A			N/A			N/A			N/A		
	U-234	N/A			N/A			N/A			N/A		
	U-235/236	N/A			N/A			N/A			N/A		
	U-238												
	Total Radiologic Risk												
	Arsenic	N/A			N/A			N/A			N/A		
	Beryllium	N/A			N/A			N/A			N/A		
	Benzo(a)anthracene	N/A			N/A			N/A			N/A		
	Benzo(a)pyrene	N/A			N/A			N/A			N/A		
	Benzo(b)fluoranthene	N/A			N/A			N/A			N/A		
	Total Chemical Risk												
	TOTAL												
Homegrown Produce (GMR Surf. Water Affected)	Arsenic	N/A			N/A			N/A			3.0E-09	100.00%	84.43%
	Total										3.0E-09	100.00%	84.43%
Beef/Milk (Dust Affected)	CS-137	N/A			N/A			N/A			N/A		
	NP-237	N/A			N/A			N/A			N/A		
	PU-238	N/A			N/A			N/A			N/A		
	PU-239/240	N/A			N/A			N/A			N/A		
	RA-226	N/A			N/A			N/A			N/A		
	RA-228	N/A			N/A			N/A			N/A		
	SR-90	N/A			N/A			N/A			N/A		
	TH-228	N/A			N/A			N/A			N/A		
	TH-230	N/A			N/A			N/A			N/A		
	TH-232	N/A			N/A			N/A			N/A		
	U-234	N/A			N/A			N/A			N/A		
	U-235/236	N/A			N/A			N/A			N/A		
	U-238												
	Total Radiologic Risk												
	Arsenic	N/A			N/A			N/A			N/A		
	Beryllium	N/A			N/A			N/A			N/A		
	Benzo(a)anthracene	N/A			N/A			N/A			N/A		
	Benzo(a)pyrene	N/A			N/A			N/A			N/A		
	Benzo(b)fluoranthene	N/A			N/A			N/A			N/A		
	Total Chemical Risk												
	TOTAL												
Beef/Milk (GMR Surf. Water Affected)	Arsenic	N/A			N/A			N/A			5.5E-10	100.00%	15.57%
	Total										5.5E-10	100.00%	15.57%
Ambient Radon		2.4E-07			N/A			N/A			N/A		
ALL MEDIA		8.0E-05			1.37E-09			7.67E-09			3.53E-09		

N/A signifies that exposure of the receptor to the indicated medium is not applicable.

FER\CRU2RI\ABQ\CAFP_COC.XLS; 8/31/94; 4:57 PM

000238

5894

Comment No. 43

TABLE B.3.2-1

SOUTH FIELD
EXPOSURE POINT CONCENTRATIONS FOR SCENARIOS EVALUATED

Current Land Use	Receptor	Direct Contact Medium	Route of Exposure	Exposure Point Concentration
Current with Access Controls and without (current use of FEMP continues, DOE ownership)	Trespassing Youth	surface soil	incidental ingestion dermal contact external radiation	surface soil within subunit
		air	inhalation of particulates, volatiles, and gases	maximum estimated on-subunit current concentrations derived from airborne soil air modeling results
		surface water	incidental ingestion dermal contact	surface water within subunit
		sediment	incidental ingestion dermal contact external radiation	sediment within subunit
	Off-Property Resident Farmer (adult and child), homegrown produce off-property, livestock grazing off-property	air	inhalation of particulates, volatiles, and gases	maximum estimated off-property current concentrations derived from airborne soil air modeling concentrations
		plants (homegrown produce)	ingestion of fruits and vegetables	maximum estimated off-property current concentrations derived from deposited airborne soil air modeling results
		livestock (grazing off-property)	ingestion of milk and beef	maximum estimated off-property current concentrations derived from deposited airborne soil air modeling results
	Groundskeeper	air	inhalation of particulates, volatiles, and gases	maximum estimated on-subunit current concentration derived from air modeling
		surface soil	incidental ingestion dermal contact external radiation	surface soil within subunit

TABLE B.3.2-1
(Continued)

Current Land Use	Receptor		Direct Contact Medium	Route of Exposure	Exposure Point Concentration
Current with Access Controls (current use of FEMP continues, DOE ownership) (continued)	Great Miami River Users	Recreational User	surface water	ingestion dermal contact	estimated concentrations in the Great Miami River
			fish	ingestion	estimated concentrations in the Great Miami River
		Agricultural User	plants (homegrown produce irrigated with water from Great Miami River)	ingestion of fruit and vegetables	estimated concentrations in the Great Miami River
			livestock (grazing on crops irrigated with water from Great Miami River)	ingestion of beef and milk	estimated concentrations in the Great Miami River
		~~Residential~~ ***Household*** User	surface water	ingestion dermal contact inhalation of particulates, volatiles, and gases	estimated concentrations in the Great Miami River
Current without Access Controls (current use of FEMP continues)	User of Meat and Milk Products		livestock (grazing on-property)	ingestion of milk and beef	maximum estimated on-property current concentrations derived from deposited South Field surface soil air modeling results

5894

TABLE B.3.2-1
(Continued)

Future Land Use	Receptor	Direct Contact Medium	Route of Exposure	Exposure Point Concentration
Federal Ownership	Future Off-Property Farmer (adult and child), homegrown produce off-property, livestock grazing off-property, groundwater off-property	air	inhalation of particulates, volatiles, and gases	maximum estimated off-property future concentrations derived from airborne soil air modeling results
		plants (homegrown produce)	ingestion of fruits and vegetables	maximum estimated off-property future concentrations derived from deposited airborne soil air modeling and groundwater modeling results
		livestock (grazing at property boundary)	ingestion of milk and beef	maximum estimated off-property future concentrations derived from deposited airborne soil air modeling and groundwater modeling results
		groundwater	ingestion dermal contact inhalation of volatiles released during household use	modeled groundwater concentrations off-site at time when concentration is greatest (South Field and Inactive Flyash Pile combined)
	Expanded Trespasser (youth)	air	inhalation of particulates, volatiles, and gases	maximum estimated on-subunit airborne soil modeling results
		surface water	incidental ingestion dermal contact	surface water within subunit
		sediment	incidental ingestion dermal contact external radiation	sediment within subunit
		surface soil	incidental ingestion dermal contact external radiation	surface soil within subunit

000241

5894

TABLE B.3.2-1
(Continued)

Future Land Use	Receptor		Direct Contact Medium	Route of Exposure	Exposure Point Concentration
Federal Ownership (Continued)	Great Miami River Users	Recreational User	surface water	ingestion dermal contact	estimated concentrations in the Great Miami Aquifer
			fish	ingestion	estimated concentrations in the Great Miami Aquifer
		Agricultural User	plants (homegrown produce irrigated with water from Great Miami River)	ingestion of fruits and vegetables	estimated concentrations in the Great Miami Aquifer
			livestock (grazing on crops irrigated with water from Great Miami River)	ingestion of beef and milk	estimated concentrations in the Great Miami Aquifer
		~~Residential~~ *Household* User	surface water	ingestion dermal contact inhalation of particulates, volatiles, and gases	estimated concentrations in the Great Miami Aquifer
Without Federal Ownership	*Future Off-Property Farmer (adult and child), homegrown produce off-property, livestock grazing off-property, groundwater off-property*		*air*	*inhalation of particulates, volatiles, and gases*	*maximum estimated off-property future concentrations derived from airborne soil air modeling results*
			plants (homegrown produce)	*ingestion of fruits and vegetables*	*maximum estimated off-property future concentrations derived from deposited airborne soil air modeling and groundwater modeling results*
			livestock (grazing at property boundary)	*ingestion of milk and beef*	*maximum estimated off-property future concentrations derived from deposited airborne soil air modeling and groundwater modeling results*
			groundwater	*ingestion* *dermal contact* *inhalation of volatiles released during household use*	*modeled groundwater concentrations off-site at time when concentration is greatest (South Field and Inactive Flyash Pile combined)*

000242

5894

FER\CRU2RI\TLC\APP-B\TAB32-1\September 2, 1994 8:16am

TABLE B.3.2-1
(Continued)

Future Land Use	Receptor	Direct Contact Medium	Route of Exposure	Exposure Point Concentration
Without Federal Ownership (Continued)	Future On-Property Resident Farmer (adult and child), homegrown produce on-subunit,livestock grazing (on-subunit, groundwater on-property, RME and CT estimates	air	inhalation of particulates, volatiles, gases, and indoor radon	maximum estimated on-subunit future concentrations from airborne soil modeling results; and modeled radon emissions from soil radium
		plants (homegrown produce)	ingestion of fruits and vegetables	maximum estimated on-subunit future concentrations derived from deposited airborne soil air modeling and groundwater modeling results
		livestock (grazing on property)	ingestion of milk and beef	maximum estimated on-subunit future concentrations derived from deposited airborne soil air modeling and groundwater modeling results
		groundwater	ingestion dermal contact inhalation	modeled groundwater concentrations underlying South Field at time when concentration is greatest (South Field and Inactive Flyash Pile combined)
	Future On-Property Resident Farmer (adult and child), homegrown produce on-subunit, livestock grazing on-subunit, groundwater on-property, RME and CT estimates	surface soil	incidental ingestion dermal contact external radiation	surface soil within subunit
	Future Homebuilder	waste material/subsurface soil	external radiation incidental ingestion dermal contact	waste material/subsurface soil within subunit
		air	inhalation of particulates, volatiles, and gases	estimated air concentrations at construction site on subunit

000243

5894

5894

TABLE B.3.2-1
(Continued)

Future Land Use	Receptor	Direct Contact Medium	Route of Exposure	Exposure Point Concentration
Without Federal Ownership (Continued)	Future Perched Groundwater User; homegrown produce on-subunit, livestock grazing on-subunit, groundwater on-property Solid Waste Landfill and Lime Sludge Ponds only)	air	inhalation of particulates, volatiles, gases, and indoor radon	not quantified; no perched groundwater user was evaluated for the South Field because no useable perched water from the South Field is available.
		plants (homegrown produce)	ingestion of fruits and vegetables	not quantified; no perched groundwater user was evaluated for the South Field because no useable perched water from the South Field is available.
		livestock (grazing on property)	ingestion of milk and beef	not quantified; no perched groundwater user was evaluated for the South Field because no useable perched water from the South Field is available.
		perched groundwater directly underlying subunit	ingestion dermal contact inhalation of volatiles released during household use	not quantified; no useable perched groundwater at South Field
		surface soil	incidental ingestion dermal contact external radiation	surface soil within subunit

Comment No. 49

000244

B.3.2.2 Constituents of Potential Concern

NO. B-69, NO. B-228 The CPCs quantified for South Field surface soil, subsurface soil, ~~surface water, and sediment~~ and seeps are summarized in Tables B.3.2.2(a), (b), and (c), ~~and (d),~~ respectively (Attachment III). CPCs quantified for South Field ~~groundwater~~ perched water are summarized in Table B.3.1-2(c) ~~and (d)~~ in Attachment B.III. Table B.3.2-3 summarizes CPCs for the South Field by medium.

B.3.2.3 Risk Characterization for Current Land Use

NO. B-229 The scenarios characterized for the South Field assuming continued DOE ownership with access controls are a trespassing youth; the off-property resident farmer and resident child using food products from livestock grazing off-property and from produce grown off-property; an on-property groundskeeper exposed to on-site contaminant concentrations; and a Great Miami River recreational user, a Great Miami River agricultural user, and a Great Miami River residential user. In the event that the FEMP lost access controls, ~~and~~ a user of meat and milk products from livestock grazed on-property was also evaluated.

B.3.2.3.1 Trespassing Youth

Risk was characterized for a trespassing youth on the South Field exposed to CPCs via ingestion and dermal contact with surface soil, sediment, and surface water located on the subunit; external radiation from exposure to on-subunit surface soil; and inhalation of on-subunit airborne soil particulates. Exposure point concentrations for exposure to surface soil, ~~surface water, and sediment~~ were based on analytical data from South Field soil samples, ~~while~~. The exposure point concentrations for surface water and sediment were inhaled particulate concentration were ~~was~~ based on ~~air~~ modeling results as described in Section B.2.0 of this appendix and Section 5.0 and Appendix A of this RI report.

Risks and hazards calculated for the trespassing youth exposed to CPCs in surface soil on the South Field are presented in Table B.3.2-4 (Attachment B.III). The total risk due surface to soil for this
NO. B-71 receptor was ~~2.4~~ 5.9 x 10^{-5}. This was primarily due to external radiation exposure ~~to thorium-228 in soil (7.0 x 10^{-6}), dermal contact with beryllium in soil (9.7 x 10^{-6}), and estimated ingestion of PAHs.~~ to radium-226 (4.0 x 10^{-5}), radium-228 (2.4 x 10^{-6}), thorium-228 (5.3 x 10^{-6}) thorium-232 (7.3 x 10^{-6})
No. 61 and dermal contact with benzo(a)pyrene ~~(1.2 x 10^{-6}~~ ***1.5 x 10^{-6}***). Total HI did not exceed 1.0.

5894

TABLE B.3.2-30

CARCINOGENIC RISK ASSOCIATED WITH INDOOR RADON: SOUTH FIELD[a]

Type Structure	RME	CT	Child	RME Risk-based on EPA Action Level[b]
House on Slab	4.9×10^{-2}	4.9×10^{-3}	4.2×10^{-3}	1.1×10^{-2}
House with Basement	2.3×10^{-6}	2.3×10^{-7}	1.9×10^{-7}	1.1×10^{-2}

[a]Results obtained from Indoor Radon Modeling Studies (Attachment I) using radon-226 concentrations in South Field subsurface soil

[b]EPA Action level of 4 pCi/L (ASTDR 1990*f*)

Comment No. 48

000246

7.~~38~~ x 10^{-5}~~3~~. This is largely due to the uptake of ~~radium-226 and technetium-99 and benzo(a)pyrene, dibenzo(a,h) anthracene, and indeno(1,2,3-cd)pyrene.~~ ~~PAHs~~ by livestock ~~additional CPCs contributed greater than 1.0 x 10^{-6}, but made up less than two percent of the total medium risks.~~ Total ~~HI from beef and milk~~ ~~hazard~~ for ~~both~~ the farmer ~~and the child~~ was below 1.0, ~~but the~~ child. ~~had a hazard of 2.9 due to the estimated uptake of uranium total by livestock.~~

CT estimates of risk for the future on-property resident farmer associated with exposures to surface soil, groundwater, homegrown produce, and beef and milk are given in Tables B.3.2-23, B.3.2-24,
NO. B-77 B.3.2-25, and B.3.2-26, respectively (~~Attachment B III~~). Total risk from soil was ~~2.1~~9.3 x 10^{-4}, ***due***
No. 62 ***due predominantly to external radiation from radium-226 and thorium-228*** ~~due mostly to external~~
NO. B-230 radiation from thorium-228. Total risk ~~from~~ groundwater is ~~7.8~~6.6 x 10^{-5}, homegrown produce is ~~1.1~~9.9 x 10^{-5}, and beef and milk is ~~8.3 x 10^{-6}~~ 9.4 x 10^{-6}. The greatest proportion of these risks ***from groundwater*** was due to the presence of ~~technetium-99, benzo(a)pyrene, and dibenzo(a,h)anthracene in dust and~~ uranium-234, and uranium-238 in ~~groundwater~~ ***drinking water*** and ~~its subsequent~~ uptake into irrigated plants and by watered livestock. Total HI for ~~groundwater~~ ~~produce~~ was ~~11~~ 2.2 due to total uranium and total HI for ~~produce was 1.3 also due to total uranium.~~ ~~groundwater was 8.3 also due to uranium-total.~~

B.3.2.4.4 Future On-Property (South Field) Homebuilder

Risks were calculated for a future homebuilder ingesting, inhaling, or coming into dermal contact with ~~surface and~~ subsurface soil within the South Field. The risk of external radiation resulting from exposure to subsurface soil was also determined.

The risks and hazards for an on-property homebuilder exposed to contaminated subsurface soils while building a home on the South Field are given in Table B.3.2-27 (~~Attachment B III~~). The total risk
NO. B-78, due to all CPCs by all routes of exposure was ~~2.2 x 10^{-6}~~ 1.1 x 10^{-5}. ~~The major contribution to total~~
NO. B-230 ~~risk is from radium-226 (2.6 x 10^{-6}), thorium-232 (2.1 x 10^{-6}), and thorium-228 (1.6 x 10^{-6}) via~~
No. 63 ~~external radiation~~. ***Arsenic contributed 1.0 x 10^{-6} ILCR due to dermal contact.*** HI did not exceed 1.0 for any individual CPC.

B.3.2.4.5 Future Great Miami River User

NO. B-79, NO. B-230 ~~Risks and hazards associated with future adult and youth recreational users of the Great Miami River contaminated surface water are in Tables B.3.2-28(a) and B.3.2-28(b), respectively (Attachment B-III). Total carcinogenic risks due to surface water exposure was 6.9 x 10^{-5} for the adult receptor and 4.5 x 10^{-5} for the youth receptor, are mostly to benzo(a)pyrene in contaminated fish. Total~~

TABLE B.3.2-33
CURRENT LAND USE
SOUTH FIELD
SUMMARY OF TOTAL NONCARCINOGENIC HAZARD

Medium	Parameter	Trespassing Youth	% Total Medium Hazard	% Total Receptor Hazard	Off-Property Resident Farmer	% Total Medium Hazard	% Total Receptor Hazard	Off-Property Resident Child	% Total Medium Hazard	% Total Receptor Hazard	User of Milk and Meat	% Total Medium Hazard	% Total Receptor Hazard
Surface Soil/ Air	Arsenic	1.9E-03	40.06%	0.00%	ND			ND			N/A		
	Beryllium	2.6E-03	56.12%	0.00%	ND			ND			N/A		
	Dieldrin	1.8E-04	3.83%	0.00%	ND			ND			N/A		
	Total	4.7E-03	100.00%	0.01%									
Sediment	Arsenic	9.2E-04	18.78%	0.00%	N/A			N/A			N/A		
	Beryllium	3.2E-03	65.77%	0.01%	N/A			N/A			N/A		
	U-TOTAL	5.5E-04	11.38%	0.00%	N/A			N/A			N/A		
	Dieldrin	2.0E-04	4.07%	0.00%	N/A			N/A			N/A		
	Total	4.9E-03	100.00%	0.01%									
Surface Water	Arsenic	4.1E-02	0.08%	0.08%	N/A			N/A			N/A		
	Beryllium	2.4E-02	0.05%	0.05%	N/A			N/A			N/A		
	Dieldrin	1.7E-01	0.32%	0.32%	N/A			N/A			N/A		
	U-Total	5.3E+01	99.55%	99.54%	N/A			N/A			N/A		
	Total	5.3E+01	100.00%	99.98%									
GMR Surface Water	Arsenic	N/A			N/A			N/A			N/A		
	Beryllium	N/A			N/A			N/A			N/A		
	Dieldrin	N/A			N/A			N/A			N/A		
	U-TOTAL	N/A			N/A			N/A			N/A		
	Total	N/A			N/A			N/A			N/A		
Homegrown Produce (Dust Affected)	Arsenic	N/A			1.7E-05	98.00%	86.15%	6.5E-05	98.75%	89.61%	N/A		
	Beryllium	N/A			8.0E-08	0.45%	0.40%	1.8E-07	0.28%	0.26%	N/A		
	Dieldrin	N/A			2.7E-07	1.55%	1.36%	6.4E-07	0.97%	0.88%	N/A		
											N/A		
	Total				1.8E-05	100.00%	87.91%	6.5E-05	100.00%	90.75%			
Homegrown Produce (GMR Surface Water Affected)	Arsenic	N/A			N/A			N/A			N/A		
	Beryllium	N/A			N/A			N/A			N/A		
	Dieldrin	N/A			N/A			N/A			N/A		
	U-TOTAL	N/A			N/A			N/A			N/A		
	Total												
Beef/Milk (Dust Affected)	Arsenic	N/A			2.4E-06	99.64%	12.05%	6.7E-06	99.75%	9.22%	2.9E-05	99.64%	99.64%
	Beryllium	N/A			8.7E-09	0.36%	0.04%	1.6E-08	0.24%	0.02%	1.1E-07	0.36%	0.36%
	Dieldrin	N/A			1.1E-10	0.00%	0.00%	7.7E-10	0.01%	0.00%	1.4E-09	0.00%	0.00%
	Total				2.4E-06	100.00%	12.09%	6.7E-06	100.00%	9.25%	3.0E-05	100.00%	100.00%
Beef/Milk (GMR Surface Water Affected)	Arsenic	N/A			N/A			N/A			N/A		
	Beryllium	N/A			N/A			N/A			N/A		
	Dieldrin	N/A			N/A			N/A			N/A		
	U-TOTAL	N/A			N/A			N/A			N/A		
	Total												
ALL MEDIA		5.3E+01			2.0E-05			7.2E-05			3.0E-05		

FER\CRU2RI\ABQ\CSF_COCN.XLS; 8/31/94; 5:06 PM

Comment No. 43

TABLE B.3.2-33
(continued)

Medium	Parameter	Groundskeeper	% Total Medium Hazard	% Total Receptor Hazard	Great Miami Riv. Rec. User	% Total Medium Hazard	% Total Receptor Hazard	Great Miami Riv. Resid. User	% Total Medium Hazard	% Total Receptor Hazard	Great Miami Riv. Ag. User	% Total Medium Hazard	% Total Receptor Hazard
Surface Soil/ Air	Arsenic	*3.5E-03*	*68.36%*	*68.36%*	N/A			N/A			N/A		
	Beryllium	*1.5E-03*	*29.30%*	*29.30%*	N/A			N/A			N/A		
	Dieldrin	*1.2E-04*	*2.34%*	*2.34%*	N/A			N/A			N/A		
	Total	*5.1E-03*	*100.00%*	*100.00%*									
Sediment	Arsenic	N/A			N/A			N/A			N/A		
	Beryllium	N/A			N/A			N/A			N/A		
	U-TOTAL	N/A			N/A			N/A			N/A		
	Dieldrin	N/A			N/A			N/A			N/A		
	Total												
Surface Water		N/A			N/A			N/A			N/A		
		N/A			N/A			N/A			N/A		
		N/A			N/A			N/A			N/A		
		N/A			N/A			N/A			N/A		
	Total												
GMR Surface	Arsenic	N/A			7.9E-07	31.81%	31.81%	1.9E-06	1.39%	1.39%	N/A		
	Beryllium	N/A			2.8E-09	0.11%	0.11%	1.5E-08	0.01%	0.01%	N/A		
	Dieldrin	N/A			5.7E-09	0.23%	0.23%	5.4E-07	0.40%	0.40%	N/A		
	U-TOTAL	N/A			1.7E-06	67.85%	67.85%	1.3E-04	98.20%	98.20%	N/A		
	Total	N/A			*2.5E-06*	100.00%	100.00%	*1.4E-04*	100.00%	100.00%	N/A		
Homegrown Produce (Dust Affected)	Arsenic	N/A			N/A			N/A			N/A		
	Beryllium	N/A			N/A			N/A			N/A		
	Dieldrin	N/A			N/A			N/A			N/A		
		N/A			N/A			N/A			N/A		
	Total												
Homegrown Produce (GMR Surface Water Affected)	Arsenic	N/A			N/A			N/A			7.4E-07	1.86%	1.86%
	Beryllium	N/A			N/A			N/A			3.9E-09	0.01%	0.01%
	Dieldrin	N/A			N/A			N/A			6.4E-07	1.62%	1.61%
	U-TOTAL	N/A			N/A			N/A			3.8E-05	96.51%	96.13%
	Total										4.0E-05	100.00%	99.61%
Beef/Milk (Dust Affected)	Arsenic	N/A			N/A			N/A			N/A		
	Beryllium	N/A			N/A			N/A			N/A		
	Dieldrin	N/A			N/A			N/A			N/A		
	Total												
Beef/Milk (GMR Surface Water Affected)	Arsenic	N/A			N/A			N/A			1.4E-07	86.81%	0.34%
	Beryllium	N/A			N/A			N/A			2.1E-10	0.13%	0.00%
	Dieldrin	N/A			N/A			N/A			1.9E-10	0.12%	0.00%
	U-TOTAL	N/A			N/A			N/A			2.0E-08	12.94%	0.05%
	Total										1.6E-07	100.00%	0.39%
ALL MEDIA		*5.1E-03*			*2.5E-06*			*1.4E-04*			4.0E-05		

N/A signifies that exposure of the receptor to the indicated medium is not applicable.

FER\CRU2RI\ABQ\CSF_COCN.XLS; 8/31/94; 5:06 PM

Comment No. 43

000250

5894

accounted for approximately 73 percent of the total receptor risks. Total HI for this receptor was less than 1.0.

Tables B.3.2-34 and B.3.2-35 summarize risks and hazards, respectively, associated with the South Field for receptors assuming future land use. The greatest risks were associated with the on-property RME farmer and child, and the on-property CT farmer for which risks ~~was~~ were ~~3.8×10^{-3}~~ 3.4×10^{-3}, 9.2×10^{-3}, and 2.0×10^{-3}, respectively. Risks to these on-property receptors were primarily through the ingestion of dust affected beef and milk products containing technetium-99 (7.8×10^{-3}, 1.3×10^{-3}, and 3.7×10^{-4}, respectively), benzo(a)pyrene (5.4×10^{-3}, 3.1×10^{-3}, 2.7×10^{-4}, respectively), dibenzo(a,h)anthracene (4.0×10^{-3}, 2.3×10^{-3}, 2.0×10^{-4}, respectively), benzo(b)fluoranthene (3.7×10^{-4}, 2.1×10^{-4}, and 1.9×10^{-5}, respectively), and indeno(1,2,3-cd)pyrene (7.8×10^{-4}, 4.5×10^{-4}, and 3.9×10^{-5}). ***Also contributing to the on-property risks were external radiation to radium-226 (7.8E-03, 6.5E-04, and 5.9E-04 respectively).*** Total hazards for the on-property receptors exceeded 1.0 (23, 63, and 11, respectively) due primarily to the presence of uranium-total in groundwater.

No. 64

Risks to ~~all other receptors (~~ the off-property farmer and resident child (both federal and private ownership) ~~; and on-property resident child) via contact with groundwater, beef and milk, and homegrown produce~~ were in the 1.0×10^{-6} to 1.0×10^{-4} range. The greatest proportion of the risks for ~~all these pathways~~ the off-property farmer under private and federal ownership was attributable to the future estimated concentrations of uranium-234 (1.9×10^{-5}) and uranium-238 (3.6×10^{-5}) in groundwater which accounted for approximately 52 percent of the total receptor risk. ~~, and consequently in irrigated homegrown produce and beef and milk from livestock watered with contaminated groundwater; from the presence of radium-228 and thorium-228 in surface soil; and from the presence of PAHs in surface soil~~. For the off-property child under private ownership, the primary contributors to total risk were from ingestion of beef and milk products affected by dust containing dibenzo(a,h)anthracene (3.9×10^{-6}), benzo(a)pyrene (3.5×10^{-6}), and Aroclor-1260 (1.1×10^{-6}) which contributed 57 percent of the total receptor risk. For the off-property child under federal ownership, the primary contributors to total receptor risk were uranium-234 and uranium-238 in groundwater which contributed 56 percent. Total hazards for both the off-property receptors exceeded 1.0 ~~The greatest hazard (Table B.3.2-35) to all on and the off property farm receptors was~~ due to the estimated future presence of uranium-total in groundwater.

000251

Risks to the expanded trespasser and homebuilder were 1.4×10^{-4} and 1.1×10^{-5}, respectively. The greatest contribution of risk to the expanded trespasser was from radium-226 (8.3×10^{-5}), radium-228

5894

TABLE B.3.2-34
FUTURE LAND USE
SOUTH FIELD
SUMMARY OF TOTAL CARCINOGENIC RISK

Medium	Parameter	Expanded Trespasser	% Total Medium Risk	% Total Receptor Risk	Off-Property Res. Farmer (Priv. Own.)	% Total Medium Risk	% Total Receptor Risk	Off-Propert Res. Farmer (Fed. Own.)	% Total Medium Risk	% Total Receptor Risk	Off-Property Res. Child (Priv. Own.)	% Total Medium Risk	% Total Receptor Risk	Off-Propert Res. Child (Fed. Own.)	% Total Medium Risk	% Total Receptor Risk	Home-builder	% Total Medium Risk	% Total Receptor Risk
Surface Soil/ Air	CS-137	4.5E-07	0.37%	0.32%	2.9E-11	0.00%	0.00%	*8.0E-13*	*0.00%*	*0.00%*	5.2E-13	0.00%	0.00%	1.5E-14	0.00%	0.00%	5.7E-08	0.50%	0.50%
	NP-237	4.3E-08	0.04%	0.03%	1.9E-08	0.27%	0.02%	*5.3E-10*	*0.28%*	*0.00%*	3.4E-10	0.23%	0.00%	9.6E-12	0.23%	0.00%	2.9E-08	0.25%	0.25%
	PB-210																3.3E-07	2.92%	2.92%
	PU-238	9.8E-10	0.00%	0.00%	1.4E-08	0.20%	0.01%	*3.8E-10*	*0.20%*	*0.00%*	2.5E-10	0.17%	0.00%	7.0E-12	0.17%	0.00%	6.4E-09	0.06%	0.06%
	PU-239/240	6.6E-10	0.00%	0.00%	8.7E-09	0.13%	0.01%	*2.4E-10*	*0.13%*	*0.00%*	1.6E-10	0.11%	0.00%	4.4E-12	0.11%	0.00%	4.0E-09	0.04%	0.04%
	RA-224																1.9E-08	0.16%	0.16%
	RA-226	8.3E-05	68.57%	59.89%	6.5E-07	9.54%	0.61%	*1.8E-08*	*9.53%*	*0.02%*	1.2E-08	8.09%	0.08%	3.3E-10	8.08%	0.08%	2.6E-06	22.44%	22.44%
	RA-228	5.0E-06	4.15%	3.62%	8.1E-09	0.12%	0.01%	*2.3E-10*	*0.12%*	*0.00%*	1.5E-10	0.10%	0.00%	4.1E-12	0.10%	0.00%	5.9E-07	5.20%	5.20%
	RU-106																1.0E-09	0.01%	0.01%
	SR-90	1.9E-09	0.00%	0.00%	3.0E-10	0.00%	0.00%	*8.4E-12*	*0.00%*	*0.00%*	5.4E-12	0.00%	0.00%	1.5E-13	0.00%	0.00%			
	TC-99	6.1E-09	0.00%	0.00%	3.5E-09	0.05%	0.00%	*1.0E-10*	*0.05%*	*0.00%*	6.4E-11	0.04%	0.00%	1.8E-12	0.04%	0.00%			
	TH-228	1.1E-05	9.09%	7.94%	1.0E-06	15.26%	0.97%	*2.9E-08*	*15.25%*	*0.04%*	1.9E-08	12.95%	0.13%	5.3E-10	12.93%	0.13%	1.6E-06	13.85%	13.85%
	TH-230	1.9E-08	0.02%	0.01%	1.2E-06	17.72%	1.13%	*3.4E-08*	*17.73%*	*0.04%*	2.2E-08	15.03%	0.15%	6.2E-10	15.04%	0.15%	5.1E-07	4.43%	4.43%
	TH-232	1.5E-05	12.49%	10.91%	1.3E-06	19.47%	1.24%	*3.7E-08*	*19.44%*	*0.05%*	2.4E-08	16.51%	0.16%	6.7E-10	16.49%	0.16%	2.1E-06	18.66%	18.66%
	U-234	1.2E-08	0.01%	0.01%	6.8E-07	9.96%	0.63%	*1.9E-08*	*9.96%*	*0.02%*	1.2E-08	8.44%	0.08%	3.5E-10	8.45%	0.08%	3.2E-07	2.82%	2.82%
	U-235/236	9.6E-08	0.08%	0.07%	6.7E-08	0.98%	0.06%	*1.9E-09*	*0.98%*	*0.00%*	1.2E-09	0.83%	0.01%	3.4E-11	0.83%	0.01%	2.0E-07	1.76%	1.76%
	U-238	1.7E-07	0.14%	0.12%	1.5E-06	21.41%	1.36%	*4.1E-08*	*21.43%*	*0.05%*	2.6E-08	18.17%	0.18%	7.4E-10	18.18%	0.18%	8.2E-07	7.18%	7.18%
	Total Radiological Risk	1.2E-04	94.96%	82.94%	6.5E-06	95.12%	6.04%	*1.8E-07*	*95.11%*	*0.23%*	1.2E-07	80.69%	0.78%	3.3E-09	80.66%	0.78%	9.2E-06	80.28%	80.28%
	Aroclor-1254	5.2E-07	0.43%	0.37%													3.0E-07	2.67%	2.67%
	Aroclor-1260	3.0E-07	0.25%	0.22%													6.3E-08	0.55%	0.55%
	Arsenic	4.3E-07	0.35%	0.31%	1.8E-07	2.70%	0.17%	*5.2E-09*	*2.70%*	*0.01%*	1.6E-08	10.68%	0.10%	4.4E-10	10.69%	0.10%	1.1E-06	9.46%	9.46%
	Benzo(a)anthracene	1.9E-07	0.16%	0.14%	5.7E-09	0.08%	0.01%	*1.6E-10*	*0.08%*	*0.00%*	4.8E-10	0.33%	0.00%	1.3E-11	0.33%	0.00%	1.1E-08	0.10%	0.10%
	Benzo(a)pyrene	3.3E-06	2.70%	2.36%	9.6E-08	1.42%	0.09%	*2.7E-09*	*1.42%*	*0.00%*	8.2E-09	5.61%	0.05%	2.3E-10	5.62%	0.05%	1.2E-07	1.01%	1.01%
	Benzo(b)fluoranthene	2.2E-07	0.18%	0.16%	6.4E-09	0.09%	0.01%	*1.8E-10*	*0.09%*	*0.00%*	5.4E-10	0.37%	0.00%	1.5E-11	0.37%	0.00%	1.2E-08	0.11%	0.11%
	Benzo(k)fluoranthene	2.6E-08	0.02%	0.02%	7.5E-10	0.01%	0.00%	*2.1E-11*	*0.01%*	*0.00%*	6.4E-11	0.04%	0.00%	1.8E-12	0.04%	0.00%			
	Beryllium	1.9E-07	0.16%	0.14%	1.3E-08	0.20%	0.01%	*3.8E-10*	*0.20%*	*0.00%*	1.1E-09	0.78%	0.01%	3.2E-11	0.78%	0.01%	5.9E-07	5.14%	5.14%
	Dibenzo(a,h)anthracene	6.7E-07	0.55%	0.48%	2.0E-08	0.29%	0.02%	*5.5E-10*	*0.29%*	*0.00%*	1.7E-09	1.14%	0.01%	4.6E-11	1.14%	0.01%			
	Dieldrin	9.2E-08	0.08%	0.07%	2.7E-10	0.00%	0.00%	*7.6E-12*	*0.00%*	*0.00%*	2.3E-11	0.02%	0.00%	6.4E-13	0.02%	0.00%	1.2E-08	0.11%	0.11%
	Indeno(1,2,3-cd)pyrene	2.1E-07	0.17%	0.15%	6.2E-09	0.09%	0.01%	*1.7E-10*	*0.09%*	*0.00%*	5.2E-10	0.36%	0.00%	1.5E-11	0.36%	0.00%			
	Octachlorodibenzo-p-dioxin																4.4E-08	0.38%	0.38%
	Tetrachlorodibenzofuran																2.2E-08	0.19%	0.19%
	Total Chemical Risk	6.1E-06	5.04%	4.40%	3.3E-07	4.88%	0.31%	*9.4E-09*	*4.89%*	*0.01%*	2.8E-08	19.31%	0.19%	7.9E-10	19.34%	0.19%	2.3E-06	19.72%	19.72%
	Total	1.2E-04	100.00%	87.34%	6.8E-06	100.00%	6.35%	*1.9E-07*	*100.00%*	*0.24%*	1.5E-07	100.00%	0.97%	4.1E-09	100.00%	0.97%	1.1E-05	100.00%	100.00%

Comment No. 43

5894

TABLE B.3.2-34
(continued)

Medium	Parameter	On-Property Resident Farmer (RME)	% Total Medium Risk	% Total Receptor Risk	On-Property Resident Farmer (CT)	% Total Medium Risk	% Total Receptor Risk	On-Property Resident Child	% Total Medium Risk	% Total Receptor Risk	Great Miami Riv Rec. User	% Total Medium Risk	% Total Receptor Risk	Great Miami Riv esid. Use	% Total Medium Risk	% Total Receptor Risk	Great Miami Riv Ag. User	% Total Medium Risk	% Total Receptor Risk
Surface Soil/	CS-137	4.2E-05	0.36%	0.12%	3.5E-06	0.37%	0.17%	3.1E-06	0.30%	0.03%	N/A			N/A			N/A		
Air	NP-237	4.3E-06	0.04%	0.01%	3.5E-07	0.04%	0.02%	3.1E-07	0.03%	0.00%	N/A			N/A			N/A		
	PU-238	3.0E-07	0.00%	0.00%	1.9E-08	0.00%	0.00%	1.4E-08	0.00%	0.00%	N/A			N/A			N/A		
	PU-239/240	2.0E-07	0.00%	0.00%	1.3E-08	0.00%	0.00%	9.5E-09	0.00%	0.00%	N/A			N/A			N/A		
	RA-226	7.8E-03	68.39%	23.18%	6.5E-04	69.79%	31.68%	5.9E-04	55.96%	6.34%	N/A			N/A			N/A		
	RA-228	4.7E-04	4.12%	1.40%	3.9E-05	4.22%	1.92%	3.5E-05	3.36%	0.38%	N/A			N/A			N/A		
	SR-90	2.6E-07	0.00%	0.00%	1.2E-08	0.00%	0.00%	2.4E-08	0.00%	0.00%	N/A			N/A			N/A		
	TC-99	8.7E-07	0.01%	0.00%	4.3E-08	0.00%	0.00%	7.9E-08	0.01%	0.00%	N/A			N/A			N/A		
	TH-228	1.0E-03	9.14%	3.10%	8.7E-05	9.36%	4.25%	7.7E-05	7.38%	0.84%	N/A			N/A			N/A		
	TH-230	1.7E-05	0.15%	0.05%	1.3E-06	0.14%	0.06%	3.8E-07	0.04%	0.00%	N/A			N/A			N/A		
	TH-232	1.4E-03	12.55%	4.25%	1.2E-04	12.85%	5.84%	1.1E-04	10.15%	1.15%	N/A			N/A			N/A		
	U-234	9.9E-06	0.09%	0.03%	7.2E-07	0.08%	0.04%	2.3E-07	0.02%	0.00%	N/A			N/A			N/A		
	U-235/236	9.8E-06	0.09%	0.03%	8.1E-07	0.09%	0.04%	6.9E-07	0.07%	0.01%	N/A			N/A			N/A		
	U-238	3.5E-05	0.31%	0.10%	2.7E-06	0.29%	0.13%	1.5E-06	0.14%	0.02%	N/A			N/A			N/A		
	Total Radiological Risk	1.1E-02	95.25%	32.28%	9.0E-04	97.24%	44.15%	8.1E-04	77.46%	8.77%									
	Aroclor-1254	6.0E-06	0.05%	0.02%	1.5E-07	0.02%	0.01%	1.4E-06	0.13%	0.01%	N/A			N/A			N/A		
	Aroclor-1260	3.5E-06	0.03%	0.01%	8.5E-08	0.01%	0.00%	7.9E-07	0.08%	0.01%	N/A			N/A			N/A		
	Arsenic	3.5E-05	0.31%	0.10%	1.7E-06	0.18%	0.08%	1.4E-05	1.37%	0.15%	N/A			N/A			N/A		
	Benzo(a)anthracene	2.0E-05	0.17%	0.06%	9.5E-07	0.10%	0.05%	8.8E-06	0.84%	0.10%	N/A			N/A			N/A		
	Benzo(a)pyrene	3.4E-04	2.98%	1.01%	1.6E-05	1.75%	0.80%	1.5E-04	14.37%	1.63%	N/A			N/A			N/A		
	Benzo(b)fluoranthene	2.2E-05	0.20%	0.07%	1.1E-06	0.12%	0.05%	9.9E-06	0.95%	0.11%	N/A			N/A			N/A		
	Benzo(k)fluoranthene	2.6E-06	0.02%	0.01%	1.3E-07	0.01%	0.01%	1.2E-06	0.11%	0.01%	N/A			N/A			N/A		
	Beryllium	2.0E-05	0.18%	0.06%	9.7E-07	0.10%	0.05%	8.9E-06	0.85%	0.10%	N/A			N/A			N/A		
	Dibenzo(a,h)anthracene	6.9E-05	0.60%	0.20%	3.3E-06	0.35%	0.16%	3.0E-05	2.90%	0.33%	N/A			N/A			N/A		
	Dieldrin	1.2E-06	0.01%	0.00%	3.0E-08	0.00%	0.00%	2.8E-07	0.03%	0.00%	N/A			N/A			N/A		
	Indeno(1,2,3-cd)pyrene	2.2E-05	0.19%	0.06%	1.0E-06	0.11%	0.05%	9.6E-06	0.92%	0.10%	N/A			N/A			N/A		
	Total Chemical Risk	5.4E-04	4.75%	1.61%	2.6E-05	2.76%	1.26%	2.4E-04	22.54%	2.55%									
	Total	1.1E-02	100.00%	33.89%	9.3E-04	100.00%	45.40%	1.0E-03	100.00%	11.32%									

Comment No. 43

000254

TABLE B.3.2-34
(continued)

Medium	Parameter	Expanded Trespasser	% Total Medium Risk	% Total Receptor Risk	Off-Property Res. Farmer (Priv. Own.)	% Total Medium Risk	% Total Receptor Risk	Off-Propert Res. Farmer (Fed. Own.)	% Total Medium Risk	% Total Receptor Risk	Off-Property Res. Child (Priv. Own.)	% Total Medium Risk	% Total Receptor Risk	Off-Propert Res. Child (Fed. Own.)	% Total Medium Risk	% Total Receptor Risk	Home-builder	% Total Medium Risk	% Total Receptor Risk
Sediment	NP-237	6.6E-09	0.04%	0.00%	N/A			N/A			N/A			N/A			N/A		
	PU-238	1.0E-10	0.00%	0.00%	N/A			N/A			N/A			N/A			N/A		
	RA-226	1.3E-05	89.14%	9.51%	N/A			N/A			N/A			N/A			N/A		
	RA-228	8.1E-07	5.41%	0.58%	N/A			N/A			N/A			N/A			N/A		
	SR-90	2.2E-11	0.00%	0.00%	N/A			N/A			N/A			N/A			N/A		
	TC-99	3.2E-10	0.00%	0.00%	N/A			N/A			N/A			N/A			N/A		
	U-234	5.3E-10	0.00%	0.00%	N/A			N/A			N/A			N/A			N/A		
	U-235/236	1.4E-08	0.10%	0.01%	N/A			N/A			N/A			N/A			N/A		
	U-238	2.3E-08	0.16%	0.02%	N/A			N/A			N/A			N/A			N/A		
	Total Radiological Risk	1.4E-05	94.85%	10.12%															
	Benzo(a)pyrene	4.9E-07	3.30%	0.35%	N/A			N/A			N/A			N/A			N/A		
	Benzo(b)fluoranthene	3.2E-08	0.22%	0.02%	N/A			N/A			N/A			N/A			N/A		
	Arsenic	8.5E-08	0.57%	0.06%	N/A			N/A			N/A			N/A			N/A		
	Beryllium	2.9E-08	0.19%	0.02%	N/A			N/A			N/A			N/A			N/A		
	Benzo(a)anthracene	2.9E-08	0.19%	0.02%	N/A			N/A			N/A			N/A			N/A		
	Dieldrin	5.5E-10	0.00%	0.00%	N/A			N/A			N/A			N/A			N/A		
	Dibenzo(a,h)anthracene	9.9E-08	0.67%	0.07%	N/A			N/A			N/A			N/A			N/A		
	Total Chemical Risk	7.7E-07	5.15%	0.55%															
	Total	1.5E-05	100.00%	10.67%															
Groundwater	NP-237	N/A			3.0E-09	0.01%	0.00%	3.0E-09	0.01%	0.00%	1.3E-10	0.01%	0.00%	1.3E-10	0.01%	0.00%	N/A		
	SR-90	N/A			4.0E-09	0.01%	0.00%	4.0E-09	0.01%	0.00%	1.7E-10	0.01%	0.00%	1.7E-10	0.01%	0.00%	N/A		
	TC-99	N/A			6.2E-08	0.11%	0.06%	6.2E-08	0.11%	0.06%	2.7E-09	0.11%	0.02%	2.7E-09	0.11%	0.06%	N/A		
	U-234	N/A			1.9E-05	33.45%	17.55%	1.9E-05	33.45%	17.55%	8.1E-07	33.45%	5.38%	8.1E-07	33.45%	19.05%	N/A		
	U-235/236	N/A			1.0E-06	1.78%	0.94%	1.0E-06	1.78%	0.94%	4.3E-08	1.78%	0.29%	4.3E-08	1.78%	1.02%	N/A		
	U-238	N/A			3.6E-05	64.64%	33.91%	3.6E-05	64.64%	33.91%	1.6E-06	64.64%	10.39%	1.6E-06	64.64%	36.81%	N/A		
	Total Radiological Risk				5.6E-05	100.00%	52.46%	5.6E-05	100.00%	52.46%	2.4E-06	100.00%	16.08%	2.4E-06	100.00%	56.95%			

5894

TABLE B.3.2-34
(continued)

Medium	Parameter	On-Property Resident Farmer (RME)	% Total Medium Risk	% Total Receptor Risk	On-Property Resident Farmer (CT)	% Total Medium Risk	% Total Receptor Risk	On-Property Resident Child	% Total Medium Risk	% Total Receptor Risk	Great Miami Riv Rec. User	% Total Medium Risk	% Total Receptor Risk	Great Miami Riv esid. Use	% Total Medium Risk	% Total Receptor Risk	Great Miami Riv Ag. User	% Total Medium Risk	% Total Receptor Risk
Sediment	NP-237	N/A			N/A			N/A			N/A			N/A			N/A		
	PU-238	N/A			N/A			N/A			N/A			N/A			N/A		
	RA-226	N/A			N/A			N/A			N/A			N/A			N/A		
	RA-228	N/A			N/A			N/A			N/A			N/A			N/A		
	SR-90	N/A			N/A			N/A			N/A			N/A			N/A		
	TC-99	N/A			N/A			N/A			N/A			N/A			N/A		
	U-234	N/A			N/A			N/A			N/A			N/A			N/A		
	U-235/236	N/A			N/A			N/A			N/A			N/A			N/A		
	U-238	N/A			N/A			N/A			N/A			N/A			N/A		
	Total Radiological Risk																		
	Benzo(a)pyrene	N/A			N/A			N/A			N/A			N/A			N/A		
	Benzo(b)fluoranthene	N/A			N/A			N/A			N/A			N/A			N/A		
	Arsenic	N/A			N/A			N/A			N/A			N/A			N/A		
	Beryllium	N/A			N/A			N/A			N/A			N/A			N/A		
	Benzo(a)anthracene	N/A			N/A			N/A			N/A			N/A			N/A		
	Dieldrin	N/A			N/A			N/A			N/A			N/A			N/A		
	Dibenzo(a,h)anthracene	N/A			N/A			N/A			N/A			N/A			N/A		
	Total Chemical Risk																		
	Total																		
Groundwater	NP-237	2.0E-07	0.02%	0.00%	1.2E-08	0.02%	0.00%	8.8E-09	0.02%	0.00%	N/A			N/A			N/A		
	SR-90	4.8E-08	0.00%	0.00%	2.9E-09	0.00%	0.00%	2.1E-09	0.00%	0.00%	N/A			N/A			N/A		
	TC-99	1.2E-07	0.01%	0.00%	7.0E-09	0.01%	0.00%	5.0E-09	0.01%	0.00%	N/A			N/A			N/A		
	U-234	3.7E-04	33.52%	1.09%	2.2E-05	33.52%	1.08%	1.6E-05	33.52%	0.17%	N/A			N/A			N/A		
	U-235/236	2.0E-05	1.79%	0.06%	1.2E-06	1.79%	0.06%	8.4E-07	1.79%	0.01%	N/A			N/A			N/A		
	U-238	7.1E-04	64.66%	2.11%	4.3E-05	64.66%	2.09%	3.0E-05	64.66%	0.33%	N/A			N/A			N/A		
	Total Radiological Risk	1.1E-03	100.00%	3.26%	6.6E-05	100.00%	3.23%	4.7E-05	100.00%	0.51%									

5894

TABLE B.3.2-34
(continued)

Medium	Parameter	Expanded Trespasser	% Total Medium Risk	% Total Receptor Risk	Off-Property Res. Farmer (Priv. Own.)	% Total Medium Risk	% Total Receptor Risk	Off-Propert Res. Farmer (Fed. Own.)	% Total Medium Risk	% Total Receptor Risk	Off-Property Res. Child (Priv. Own.)	% Total Medium Risk	% Total Receptor Risk	Off-Propert Res. Child (Fed. Own.)	% Total Medium Risk	% Total Receptor Risk	Home-builder	% Total Medium Risk	% Total Receptor Risk
Surface Water	NP-237	3.8E-09	0.46%	0.00%	N/A			N/A			N/A			N/A			N/A		
	PU-238	1.0E-10	0.01%	0.00%	N/A			N/A			N/A			N/A			N/A		
	RA-226	9.3E-08	11.18%	0.07%	N/A			N/A			N/A			N/A			N/A		
	RA-228	1.5E-09	0.18%	0.00%	N/A			N/A			N/A			N/A			N/A		
	SR-90	9.1E-10	0.11%	0.00%	N/A			N/A			N/A			N/A			N/A		
	TC-99	4.7E-07	56.97%	0.34%	N/A			N/A			N/A			N/A			N/A		
	U-234	4.9E-08	5.88%	0.04%	N/A			N/A			N/A			N/A			N/A		
	U-235/236	4.3E-09	0.52%	0.00%	N/A			N/A			N/A			N/A			N/A		
	U-238	9.2E-08	11.09%	0.07%	N/A			N/A			N/A			N/A			N/A		
	Total Radiological Risk	7.2E-07	86.40%	0.52%															
	Arsenic	2.7E-08	3.30%	0.02%	N/A			N/A			N/A			N/A			N/A		
	Benzo(a)anthracene	4.1E-09	0.50%	0.00%	N/A			N/A			N/A			N/A			N/A		
	Benzo(a)pyrene	3.0E-08	3.56%	0.02%	N/A			N/A			N/A			N/A			N/A		
	Benzo(b)fluoranthene	5.0E-10	0.06%	0.00%	N/A			N/A			N/A			N/A			N/A		
	Beryllium	1.2E-08	1.46%	0.01%	N/A			N/A			N/A			N/A			N/A		
	Dibenzo(a,h)anthracene	6.1E-09	0.73%	0.00%	N/A			N/A			N/A			N/A			N/A		
	Dieldrin	3.3E-08	4.00%	0.02%	N/A			N/A			N/A			N/A			N/A		
	Total Chemical Risk	1.1E-07	13.60%	0.08%															
	Total	8.3E-07	100.00%	0.60%															
GMR Surface Water	NP-237	N/A			N/A			N/A			N/A			N/A			N/A		
	PU-238	N/A			N/A			N/A			N/A			N/A			N/A		
	RA-226	N/A			N/A			N/A			N/A			N/A			N/A		
	RA-228	N/A			N/A			N/A			N/A			N/A			N/A		
	SR-90	N/A			N/A			N/A			N/A			N/A			N/A		
	TC-99	N/A			N/A			N/A			N/A			N/A			N/A		
	U-234	N/A			N/A			N/A			N/A			N/A			N/A		
	U-235/236	N/A			N/A			N/A			N/A			N/A			N/A		
	U-238	N/A			N/A			N/A			N/A			N/A			N/A		
	Total Radiological Risk																		
	Arsenic	N/A			N/A			N/A			N/A			N/A			N/A		
	Beryllium	N/A			N/A			N/A			N/A			N/A			N/A		
	Benzo(a)anthracene	N/A			N/A			N/A			N/A			N/A			N/A		
	Benzo(a)pyrene	N/A			N/A			N/A			N/A			N/A			N/A		
	Benzo(b)fluoranthene	N/A			N/A			N/A			N/A			N/A			N/A		
	bis(2-Ethylhexyl)phthalate	N/A			N/A			N/A			N/A			N/A			N/A		
	Dibenzo(a,h)anthracene	N/A			N/A			N/A			N/A			N/A			N/A		
	Dieldrin	N/A			N/A			N/A			N/A			N/A			N/A		
	Total Chemical Risk																		
	Total																		

Comment No. 43

000257

894-4

TABLE B.3.2-34
(continued)

Medium	Parameter	On-Property Resident Farmer (RME)	% Total Medium Risk	% Total Receptor Risk	On-Property Resident Farmer (CT)	% Total Medium Risk	% Total Receptor Risk	On-Property Resident Child	% Total Medium Risk	% Total Receptor Risk	Great Miami Riv Rec. User	% Total Medium Risk	% Total Receptor Risk	Great Miami Riv esid. Use	% Total Medium Risk	% Total Receptor Risk	Great Miami Riv Ag. User	% Total Medium Risk	% Total Receptor Risk
Surface Water	NP-237	N/A			N/A			N/A			N/A			N/A			N/A		
	PU-238	N/A			N/A			N/A			N/A			N/A			N/A		
	RA-226	N/A			N/A			N/A			N/A			N/A			N/A		
	RA-228	N/A			N/A			N/A			N/A			N/A			N/A		
	SR-90	N/A			N/A			N/A			N/A			N/A			N/A		
	TC-99	N/A			N/A			N/A			N/A			N/A			N/A		
	U-234	N/A			N/A			N/A			N/A			N/A			N/A		
	U-235/236	N/A			N/A			N/A			N/A			N/A			N/A		
	U-238	N/A			N/A			N/A			N/A			N/A			N/A		
	Total Radiological Risk																		
	Arsenic	N/A			N/A			N/A			N/A			N/A			N/A		
	Benzo(a)anthracene	N/A			N/A			N/A			N/A			N/A			N/A		
	Benzo(a)pyrene	N/A			N/A			N/A			N/A			N/A			N/A		
	Benzo(b)fluoranthene	N/A			N/A			N/A			N/A			N/A			N/A		
	Beryllium	N/A			N/A			N/A			N/A			N/A			N/A		
	Dibenzo(a,h)anthracene	N/A			N/A			N/A			N/A			N/A			N/A		
	Dieldrin	N/A			N/A			N/A			N/A			N/A			N/A		
	Total Chemical Risk																		
	Total																		
GMR Surface Water	NP-237	N/A			N/A			N/A			1.0E-08	0.25%	0.25%	2.6E-10	0.41%	0.41%	N/A		
	PU-238	N/A			N/A			N/A			7.2E-10	0.02%	0.02%	7.1E-12	0.01%	0.01%	N/A		
	RA-226	N/A			N/A			N/A			1.3E-06	30.40%	30.40%	6.3E-09	10.10%	10.10%	N/A		
	RA-228	N/A			N/A			N/A			2.1E-08	0.49%	0.49%	1.0E-10	0.16%	0.16%	N/A		
	SR-90	N/A			N/A			N/A			7.6E-07	17.95%	17.95%	6.2E-09	9.94%	9.94%	N/A		
	TC-99	N/A			N/A			N/A			2.0E-06	46.33%	46.33%	3.2E-08	51.33%	51.33%	N/A		
	U-234	N/A			N/A			N/A			2.6E-08	0.63%	0.63%	3.3E-09	5.21%	5.21%	N/A		
	U-235/236	N/A			N/A			N/A			2.3E-09	0.05%	0.05%	2.9E-10	0.46%	0.46%	N/A		
	U-238	N/A			N/A			N/A			5.0E-08	1.19%	1.19%	6.2E-09	9.86%	9.86%	N/A		
	Total Radiological Risk										4.1E-06	97.31%	97.31%	5.5E-08	87.49%	87.49%			
	Arsenic	N/A			N/A			N/A			1.8E-10	0.00%	0.00%	1.0E-09	1.59%	1.59%	N/A		
	Beryllium	N/A			N/A			N/A			2.0E-11	0.00%	0.00%	5.1E-10	0.81%	0.81%	N/A		
	Benzo(a)anthracene	N/A			N/A			N/A			4.1E-10	0.01%	0.01%	4.4E-10	0.71%	0.71%	N/A		
	Benzo(a)pyrene	N/A			N/A			N/A			6.4E-08	1.51%	1.51%	3.2E-09	5.05%	5.05%	N/A		
	Benzo(b)fluoranthene	N/A			N/A			N/A			1.1E-09	0.03%	0.03%	5.4E-11	0.09%	0.09%	N/A		
	bis(2-Ethylhexyl)phthalate	N/A			N/A			N/A			1.5E-14	0.00%	0.00%	2.6E-11	0.04%	0.04%	N/A		
	Dibenzo(a,h)anthracene	N/A			N/A			N/A			4.8E-08	1.14%	1.14%	6.6E-10	1.04%	1.04%	N/A		
	Dieldrin	N/A			N/A			N/A			1.9E-12	0.00%	0.00%	2.0E-09	3.18%	3.18%	N/A		
	Total Chemical Risk										1.1E-07	2.69%	2.69%	7.9E-09	12.51%	12.51%			
	Total										4.2E-06	100.00%	100.00%	6.3E-08	100.00%	100.00%			

Comment No. 43

000258

TABLE B.3.2-34
(continued)

Medium	Parameter	Expanded Trespasser	% Total Medium Risk	% Total Receptor Risk	Off-Property Res. Farmer (Priv. Own.)	% Total Medium Risk	% Total Receptor Risk	Off-Propert Res. Farmer (Fed. Own.)	% Total Medium Risk	% Total Receptor Risk	Off-Property Res. Child (Priv. Own.)	% Total Medium Risk	% Total Receptor Risk	Off-Propert Res. Child (Fed. Own.)	% Total Medium Risk	% Total Receptor Risk	Home-builder	% Total Medium Risk	% Total Receptor Risk
Homegrown Produce (Dust Affected)	CS-137	N/A			7.6E-10	0.02%	0.00%	2.0E-11	0.02%	0.00%	5.3E-11	0.01%	0.00%	1.3E-12	0.01%	0.00%	N/A		
	NP-237	N/A			1.8E-09	0.05%	0.00%	5.1E-11	0.06%	0.00%	1.3E-10	0.01%	0.00%	3.6E-12	0.01%	0.00%	N/A		
	PU-238	N/A			9.8E-10	0.03%	0.00%	2.8E-11	0.03%	0.00%	6.9E-11	0.01%	0.00%	1.9E-12	0.01%	0.00%	N/A		
	PU-239/240	N/A			6.7E-10	0.02%	0.00%	1.9E-11	0.02%	0.00%	4.7E-11	0.01%	0.00%	1.3E-12	0.01%	0.00%	N/A		
	RA-226	N/A			9.5E-07	25.79%	0.88%	9.1E-09	10.70%	0.88%	6.7E-08	7.11%	0.45%	1.1E-09	4.45%	0.03%	N/A		
	RA-228	N/A			1.5E-08	0.40%	0.01%	4.2E-10	0.49%	0.01%	1.0E-09	0.11%	0.01%	2.9E-11	0.12%	0.00%	N/A		
	SR-90	N/A			2.5E-09	0.07%	0.00%	6.8E-11	0.08%	0.00%	1.7E-10	0.02%	0.00%	4.7E-12	0.02%	0.00%	N/A		
	TC-99	N/A			7.4E-09	0.20%	0.01%	2.1E-10	0.25%	0.01%	5.3E-10	0.06%	0.00%	1.5E-11	0.06%	0.00%	N/A		
	TH-228	N/A			9.2E-09	0.25%	0.01%	2.6E-10	0.31%	0.01%	6.5E-10	0.07%	0.00%	1.8E-11	0.07%	0.00%	N/A		
	TH-230	N/A			7.0E-09	0.19%	0.01%	2.0E-10	0.23%	0.01%	5.0E-10	0.05%	0.00%	1.4E-11	0.06%	0.00%	N/A		
	TH-232	N/A			2.7E-08	0.72%	0.02%	7.4E-10	0.88%	0.02%	1.9E-09	0.20%	0.01%	5.2E-11	0.21%	0.00%	N/A		
	U-234	N/A			5.3E-09	0.14%	0.00%	1.5E-10	0.18%	0.00%	3.7E-10	0.04%	0.00%	1.1E-11	0.04%	0.00%	N/A		
	U-235/236	N/A			5.5E-10	0.01%	0.00%	1.5E-11	0.02%	0.00%	3.8E-11	0.00%	0.00%	1.1E-12	0.00%	0.00%	N/A		
	U-238	N/A			1.0E-08	0.27%	0.01%	2.8E-10	0.33%	0.01%	7.1E-10	0.07%	0.00%	2.0E-11	0.08%	0.00%	N/A		
	Total Radiological Risk				1.0E-06	28.18%	0.97%	1.2E-08	13.60%	0.97%	7.3E-08	7.77%	0.49%	1.3E-09	5.14%	0.49%			
	Aroclor-1254	N/A			5.6E-08	1.51%	0.05%	1.3E-09	1.58%	0.05%	1.8E-08	1.94%	0.12%	3.8E-10	1.53%	0.01%	N/A		
	Aroclor-1260	N/A			1.4E-08	0.39%	0.01%	3.7E-10	0.44%	0.01%	4.7E-09	0.50%	0.03%	1.1E-10	0.46%	0.00%	N/A		
	Arsenic	N/A			3.4E-07	9.13%	0.31%	9.1E-09	10.73%	0.31%	1.1E-07	11.74%	0.74%	2.9E-09	11.59%	0.07%	N/A		
	Benzo(a)anthracene	N/A			9.2E-08	2.51%	0.09%	2.6E-09	3.02%	0.09%	3.0E-08	3.22%	0.20%	8.3E-10	3.32%	0.02%	N/A		
	Benzo(a)pyrene	N/A			1.5E-06	41.53%	1.42%	4.3E-08	50.37%	1.42%	5.0E-07	53.32%	3.35%	1.4E-08	55.60%	0.33%	N/A		
	Benzo(b)fluoranthene	N/A			1.0E-07	2.72%	0.09%	2.8E-09	3.30%	0.09%	3.3E-08	3.49%	0.22%	9.2E-10	3.65%	0.02%	N/A		
	Benzo(k)fluoranthene	N/A			1.2E-08	0.33%	0.01%	3.3E-10	0.39%	0.01%	3.9E-09	0.42%	0.03%	1.1E-10	0.43%	0.00%	N/A		
	Beryllium	N/A			9.3E-08	2.53%	0.09%	2.6E-09	3.05%	0.09%	3.1E-08	3.26%	0.20%	8.4E-10	3.36%	0.02%	N/A		
	Dibenzo(a,h)anthracene	N/A			3.0E-07	8.24%	0.28%	8.5E-09	10.01%	0.28%	1.0E-07	10.58%	0.66%	2.8E-09	11.09%	0.07%	N/A		
	Dieldrin	N/A			1.2E-08	0.32%	0.01%	2.9E-10	0.34%	0.01%	3.9E-09	0.42%	0.03%	8.3E-11	0.33%	0.00%	N/A		
	Indeno(1,2,3-cd)pyrene	N/A			9.6E-08	2.60%	0.09%	2.7E-09	3.16%	0.09%	3.1E-08	3.34%	0.21%	8.8E-10	3.50%	0.02%	N/A		
	Total Chemical Risk				2.6E-06	71.82%	2.46%	7.3E-08	86.40%	2.46%	8.7E-07	92.23%	5.79%	2.4E-08	94.86%	0.56%			
	Total				3.7E-06	100.00%	3.43%	8.5E-08	100.00%	3.43%	9.4E-07	100.00%	6.28%	2.5E-08	100.00%	1.05%			
Homegrown Produce (Groundwater Affected)	NP-237	N/A			9.2E-10	0.01%	0.00%	9.2E-10	0.01%	0.00%	6.5E-11	0.01%	0.00%	6.5E-11	0.01%	0.00%	N/A		
	SR-90	N/A			1.4E-09	0.01%	0.00%	1.4E-09	0.01%	0.00%	9.7E-11	0.01%	0.00%	9.7E-11	0.01%	0.00%	N/A		
	TC-99	N/A			2.0E-08	0.12%	0.02%	2.0E-08	0.12%	0.02%	1.4E-09	0.12%	0.01%	1.4E-09	0.12%	0.03%	N/A		
	U-234	N/A			5.7E-06	33.45%	5.29%	5.7E-06	33.45%	5.29%	4.0E-07	33.45%	2.67%	4.0E-07	33.45%	9.45%	N/A		
	U-235/236	N/A			3.0E-07	1.78%	0.28%	3.0E-07	1.78%	0.28%	2.1E-08	1.78%	0.14%	2.1E-08	1.78%	0.50%	N/A		
	U-238	N/A			1.1E-05	64.63%	10.22%	1.1E-05	64.63%	10.22%	7.7E-07	64.63%	5.15%	7.7E-07	64.63%	18.26%	N/A		
	Total Radiological Risk				1.7E-05	100.00%	15.81%	1.7E-05	100.00%	15.81%	1.2E-06	100.00%	7.97%	1.2E-06	100.00%	28.25%			
Homegrown Produce (GMR Surface Water Affected)	NP-237	N/A			N/A			N/A			N/A			N/A			N/A		
	PU-238	N/A			N/A			N/A			N/A			N/A			N/A		
	RA-226	N/A			N/A			N/A			N/A			N/A			N/A		
	RA-228	N/A			N/A			N/A			N/A			N/A			N/A		
	SR-90	N/A			N/A			N/A			N/A			N/A			N/A		
	TC-99	N/A			N/A			N/A			N/A			N/A			N/A		
	U-234	N/A			N/A			N/A			N/A			N/A			N/A		
	U-235/236	N/A			N/A			N/A			N/A			N/A			N/A		
	U-238	N/A			N/A			N/A			N/A			N/A			N/A		
	Total Radiological Risk																		
	Arsenic	N/A			N/A			N/A			N/A			N/A			N/A		
	Beryllium	N/A			N/A			N/A			N/A			N/A			N/A		
	Benzo(a)anthracene	N/A			N/A			N/A			N/A			N/A			N/A		
	Benzo(a)pyrene	N/A			N/A			N/A			N/A			N/A			N/A		
	Benzo(b)fluoranthene	N/A			N/A			N/A			N/A			N/A			N/A		
	bis(2-Ethylhexyl)phthalate	N/A			N/A			N/A			N/A			N/A			N/A		
	Dibenzo(a,h)anthracene	N/A			N/A			N/A			N/A			N/A			N/A		
	Dieldrin	N/A			N/A			N/A			N/A			N/A			N/A		
	Total Chemical Risk																		
	Total																		

FER\CRU2RI\ABQ\SF_COC.XLS; 8/31/94; 5:26 PM

Comment No. 43

000259

TABLE B.3.2-34
(continued)

Medium	Parameter	On-Property Resident Farmer (RME)	% Total Medium Risk	% Total Receptor Risk	On-Property Resident Farmer (CT)	% Total Medium Risk	% Total Receptor Risk	On-Property Resident Child	% Total Medium Risk	% Total Receptor Risk	Great Miami Riv Rec. User	% Total Medium Risk	% Total Receptor Risk	Great Miami Riv esid. Use	% Total Medium Risk	% Total Receptor Risk	Great Miami Riv Ag. User	% Total Medium Risk	% Total Receptor Risk
Homegrown Produce (Dust Affected)	CS-137	5.4E-07	0.04%	0.00%	3.0E-08	0.04%	0.00%	3.8E-08	0.01%	0.00%	N/A			N/A			N/A		
	NP-237	6.1E-07	0.04%	0.00%	3.3E-08	0.04%	0.00%	4.3E-08	0.01%	0.00%	N/A			N/A			N/A		
	PU-238	1.6E-09	0.00%	0.00%	8.9E-11	0.00%	0.00%	1.2E-10	0.00%	0.00%	N/A			N/A			N/A		
	PU-239/240	1.1E-09	0.00%	0.00%	6.1E-11	0.00%	0.00%	8.2E-11	0.00%	0.00%	N/A			N/A			N/A		
	RA-226	4.7E-05	3.16%	0.14%	2.6E-06	3.16%	0.13%	3.3E-06	0.88%	0.04%	N/A			N/A			N/A		
	RA-228	7.5E-07	0.05%	0.00%	4.1E-08	0.05%	0.00%	5.3E-08	0.01%	0.00%	N/A			N/A			N/A		
	SR-90	1.9E-05	1.26%	0.06%	1.0E-06	1.26%	0.05%	1.3E-06	0.35%	0.01%	N/A			N/A			N/A		
	TC-99	3.6E-04	24.21%	1.06%	2.0E-05	24.21%	0.96%	2.5E-05	6.72%	0.27%	N/A			N/A			N/A		
	TH-228	2.7E-08	0.00%	0.00%	1.5E-09	0.00%	0.00%	2.0E-09	0.00%	0.00%	N/A			N/A			N/A		
	TH-230	2.1E-08	0.00%	0.00%	1.1E-09	0.00%	0.00%	1.5E-09	0.00%	0.00%	N/A			N/A			N/A		
	TH-232	7.8E-08	0.01%	0.00%	4.3E-09	0.01%	0.00%	5.7E-09	0.00%	0.00%	N/A			N/A			N/A		
	U-234	7.2E-07	0.05%	0.00%	3.9E-08	0.05%	0.00%	5.0E-08	0.01%	0.00%	N/A			N/A			N/A		
	U-235/236	7.3E-08	0.00%	0.00%	4.0E-09	0.00%	0.00%	5.2E-09	0.00%	0.00%	N/A			N/A			N/A		
	U-238	1.3E-06	0.09%	0.00%	7.4E-08	0.09%	0.00%	9.5E-08	0.03%	0.00%	N/A			N/A			N/A		
	Total Radiological Risk	4.3E-04	28.91%	1.27%	2.3E-05	28.91%	1.15%	3.0E-05	8.02%	0.33%									
	Aroclor-1254	6.3E-06	0.43%	0.02%	3.4E-07	0.43%	0.02%	2.1E-06	0.55%	0.02%	N/A			N/A			N/A		
	Aroclor-1260	8.3E-07	0.06%	0.00%	4.6E-08	0.06%	0.00%	2.7E-07	0.07%	0.00%	N/A			N/A			N/A		
	Arsenic	5.5E-05	3.73%	0.16%	3.0E-06	3.73%	0.15%	1.8E-05	4.84%	0.20%	N/A			N/A			N/A		
	Benzo(a)anthracene	6.0E-05	4.06%	0.18%	3.3E-06	4.06%	0.16%	2.0E-05	5.25%	0.21%	N/A			N/A			N/A		
	Benzo(a)pyrene	5.7E-04	38.62%	1.70%	3.1E-05	38.62%	1.53%	1.9E-04	49.94%	2.02%	N/A			N/A			N/A		
	Benzo(b)fluoranthene	3.7E-05	2.48%	0.11%	2.0E-06	2.48%	0.10%	1.2E-05	3.20%	0.13%	N/A			N/A			N/A		
	Benzo(k)fluoranthene	1.7E-06	0.11%	0.00%	9.1E-08	0.11%	0.00%	5.5E-07	0.15%	0.01%	N/A			N/A			N/A		
	Beryllium	4.4E-06	0.30%	0.01%	2.4E-07	0.30%	0.01%	1.4E-06	0.39%	0.02%	N/A			N/A			N/A		
	Dibenzo(a,h)anthracene	4.3E-05	2.92%	0.13%	2.4E-06	2.92%	0.12%	1.4E-05	3.78%	0.15%	N/A			N/A			N/A		
	Dieldrin	2.5E-04	17.09%	0.75%	1.4E-05	17.09%	0.68%	8.3E-05	22.13%	0.90%	N/A			N/A			N/A		
	Indeno(1,2,3-cd)pyrene	1.9E-05	1.30%	0.06%	1.1E-06	1.30%	0.05%	6.3E-06	1.68%	0.07%	N/A			N/A			N/A		
	Total Chemical Risk	1.0E-03	71.09%	3.12%	5.8E-05	71.09%	2.82%	3.4E-04	91.98%	3.73%									
	Total	1.5E-03	100.00%	4.39%	8.1E-05	100.00%	3.97%	3.7E-04	100.00%	4.05%									
Homegrown Produce (Groundwater Affected)	NP-237	6.2E-08	0.02%	0.00%	3.4E-09	0.02%	0.00%	4.4E-09	0.02%	0.00%	N/A			N/A			N/A		
	SR-90	1.7E-08	0.01%	0.00%	9.1E-10	0.01%	0.00%	1.2E-09	0.01%	0.00%	N/A			N/A			N/A		
	TC-99	3.7E-08	0.01%	0.00%	2.0E-09	0.01%	0.00%	2.6E-09	0.01%	0.00%	N/A			N/A			N/A		
	U-234	1.1E-04	33.52%	0.33%	6.1E-06	33.52%	0.30%	7.8E-06	33.52%	0.08%	N/A			N/A			N/A		
	U-235/236	5.9E-06	1.79%	0.02%	3.2E-07	1.79%	0.02%	4.2E-07	1.79%	0.00%	N/A			N/A			N/A		
	U-238	2.1E-04	64.66%	0.64%	1.2E-05	64.66%	0.57%	1.5E-05	64.66%	0.16%	N/A			N/A			N/A		
	Total Radiological Risk	3.3E-04	100.00%	0.98%	1.8E-05	100.00%	0.89%	2.3E-05	100.00%	0.25%									
Homegrown Produce (GMR Surface Water Affected)	NP-237	N/A			N/A			N/A			N/A			N/A			7.9E-11	0.42%	0.00%
	PU-238	N/A			N/A			N/A			N/A			N/A			2.2E-12	0.01%	0.00%
	RA-226	N/A			N/A			N/A			N/A			N/A			2.0E-09	10.54%	0.04%
	RA-228	N/A			N/A			N/A			N/A			N/A			3.1E-11	0.16%	0.00%
	SR-90	N/A			N/A			N/A			N/A			N/A			2.2E-09	11.51%	0.05%
	TC-99	N/A			N/A			N/A			N/A			N/A			1.0E-08	55.04%	0.23%
	U-234	N/A			N/A			N/A			N/A			N/A			9.9E-10	5.24%	0.02%
	U-235/236	N/A			N/A			N/A			N/A			N/A			8.6E-11	0.46%	0.00%
	U-238	N/A			N/A			N/A			N/A			N/A			1.9E-09	9.93%	0.04%
	Total Radiological Risk																1.8E-08	93.33%	0.40%
	Arsenic	N/A			N/A			N/A			N/A			N/A			3.9E-10	2.06%	0.01%
	Beryllium	N/A			N/A			N/A			N/A			N/A			8.3E-11	0.44%	0.00%
	Benzo(a)anthracene	N/A			N/A			N/A			N/A			N/A			2.8E-11	0.15%	0.00%
	Benzo(a)pyrene	N/A			N/A			N/A			N/A			N/A			2.0E-10	1.04%	0.00%
	Benzo(b)fluoranthene	N/A			N/A			N/A			N/A			N/A			3.3E-12	0.02%	0.00%
	bis(2-Ethylhexyl)phthalate	N/A			N/A			N/A			N/A			N/A			4.2E-12	0.02%	0.00%
	Dibenzo(a,h)anthracene	N/A			N/A			N/A			N/A			N/A			3.9E-11	0.21%	0.00%
	Dieldrin	N/A			N/A			N/A			N/A			N/A			5.1E-10	2.73%	0.01%
	Total Chemical Risk																1.3E-09	6.67%	0.03%
	Total																1.9E-08	100.00%	0.43%

FER\CRU2RI\ABQ\SF_COC.XLS; 8/31/94; 5:26 PM

Comment No. 43

000280

5894

TABLE B.3.2-34
(continued)

Medium	Parameter	Expanded Trespasser	% Total Medium Risk	% Total Receptor Risk	Off-Property Res. Farmer (Priv. Own.)	% Total Medium Risk	% Total Receptor Risk	Off-Propert Res. Farmer (Fed. Own.)	% Total Medium Risk	% Total Receptor Risk	Off-Property Res. Child (Priv. Own.)	% Total Medium Risk	% Total Receptor Risk	Off-Propert Res. Child (Fed. Own.)	% Total Medium Risk	% Total Receptor Risk	Home-builder	% Total Medium Risk	% Total Receptor Risk
Beef/Milk (Dust Affected)	CS-137	N/A			3.6E-09	0.02%	0.00%	4.4E-11	0.01%	0.00%	4.6E-10	0.00%	0.00%	5.7E-12	0.00%	0.00%	N/A		
	NP-237	N/A			8.3E-12	0.00%	0.00%	1.5E-13	0.00%	0.00%	6.3E-13	0.00%	0.00%	1.2E-14	0.00%	0.00%	N/A		
	PU-238	N/A			5.6E-14	0.00%	0.00%	1.2E-15	0.00%	0.00%	5.8E-15	0.00%	0.00%	1.3E-16	0.00%	0.00%	N/A		
	PU-239/240	N/A			4.1E-14	0.00%	0.00%	9.0E-16	0.00%	0.00%	4.3E-15	0.00%	0.00%	9.5E-17	0.00%	0.00%	N/A		
	RA-226	N/A			1.7E-07	0.96%	0.16%	2.9E-09	0.79%	0.16%	2.9E-08	0.30%	0.20%	5.1E-10	0.24%	0.01%	N/A		
	RA-228	N/A			1.7E-09	0.01%	0.00%	3.5E-11	0.01%	0.00%	3.0E-10	0.00%	0.00%	6.1E-12	0.00%	0.00%	N/A		
	SR-90	N/A			1.9E-09	0.01%	0.00%	1.7E-11	0.00%	0.00%	3.6E-10	0.00%	0.00%	3.2E-12	0.00%	0.00%	N/A		
	TC-99	N/A			2.7E-08	0.15%	0.02%	4.0E-10	0.11%	0.02%	4.4E-09	0.04%	0.03%	6.6E-11	0.03%	0.00%	N/A		
	TH-228	N/A			1.2E-11	0.00%	0.00%	2.6E-13	0.00%	0.00%	2.0E-12	0.00%	0.00%	4.1E-14	0.00%	0.00%	N/A		
	TH-230	N/A			4.5E-11	0.00%	0.00%	1.1E-12	0.00%	0.00%	7.0E-12	0.00%	0.00%	1.8E-13	0.00%	0.00%	N/A		
	TH-232	N/A			1.7E-10	0.00%	0.00%	4.2E-12	0.00%	0.00%	2.7E-11	0.00%	0.00%	6.7E-13	0.00%	0.00%	N/A		
	U-234	N/A			7.4E-10	0.00%	0.00%	1.5E-11	0.00%	0.00%	1.4E-10	0.00%	0.00%	2.8E-12	0.00%	0.00%	N/A		
	U-235/236	N/A			7.6E-11	0.00%	0.00%	1.6E-12	0.00%	0.00%	1.4E-11	0.00%	0.00%	2.9E-13	0.00%	0.00%	N/A		
	U-238	N/A			1.4E-09	0.01%	0.00%	2.9E-11	0.01%	0.00%	2.5E-10	0.00%	0.00%	5.3E-12	0.00%	0.00%	N/A		
	Total Radiological Risk				2.0E-07	1.17%	0.19%	3.4E-09	0.94%	0.19%	3.5E-08	0.36%	0.24%	6.0E-10	0.28%	0.01%			
	Aroclor-1254	N/A			3.7E-07	2.09%	0.34%	7.1E-09	1.93%	0.34%	2.1E-07	2.12%	1.40%	4.1E-09	1.94%	0.10%	N/A		
	Aroclor-1260	N/A			1.8E-06	10.52%	1.71%	4.4E-08	11.89%	1.71%	1.1E-06	10.64%	7.03%	2.5E-08	11.99%	0.59%	N/A		
	Arsenic	N/A			1.2E-07	0.67%	0.11%	1.3E-09	0.35%	0.11%	2.7E-08	0.28%	0.18%	3.0E-10	0.14%	0.01%	N/A		
	Benzo(a)anthracene	N/A			1.4E-07	0.78%	0.13%	2.8E-09	0.75%	0.13%	7.8E-08	0.79%	0.52%	1.6E-09	0.76%	0.04%	N/A		
	Benzo(a)pyrene	N/A			6.1E-06	35.18%	5.73%	1.3E-07	34.67%	5.73%	3.5E-06	35.65%	23.57%	7.3E-08	35.00%	1.73%	N/A		
	Benzo(b)fluoranthene	N/A			4.2E-07	2.38%	0.39%	8.6E-09	2.35%	0.39%	2.4E-07	2.42%	1.60%	5.0E-09	2.38%	0.12%	N/A		
	Benzo(k)fluoranthene	N/A			2.9E-07	1.67%	0.27%	6.2E-09	1.68%	0.27%	1.7E-07	1.69%	1.12%	3.6E-09	1.70%	0.08%	N/A		
	Beryllium	N/A			1.1E-08	0.06%	0.01%	1.9E-10	0.05%	0.01%	1.7E-09	0.02%	0.01%	2.9E-11	0.01%	0.00%	N/A		
	Dibenzo(a,h)anthracene	N/A			6.8E-06	38.84%	6.32%	1.4E-07	38.79%	6.32%	3.9E-06	39.33%	26.00%	8.2E-08	39.14%	1.94%	N/A		
	Dieldrin	N/A			6.5E-12	0.00%	0.00%	9.2E-14	0.00%	0.00%	3.7E-12	0.00%	0.00%	5.3E-14	0.00%	0.00%	N/A		
	Indeno(1,2,3-cd)pyrene	N/A			1.2E-06	6.63%	1.08%	2.4E-08	6.59%	1.08%	6.7E-07	6.72%	4.44%	1.4E-08	6.65%	0.33%	N/A		
	Total Chemical Risk				1.7E-05	98.83%	16.08%	3.6E-07	99.06%	16.08%	9.9E-06	99.64%	65.87%	2.1E-07	99.72%	4.93%			
	Total				1.7E-05	100.00%	16.27%	3.7E-07	100.00%	16.27%	9.9E-06	100.00%	66.11%	2.1E-07	100.00%	4.95%			
Beef/Milk (Groundwater Affected)	NP-237	N/A			2.8E-12	0.00%	0.00%	2.8E-12	0.00%	0.00%	2.2E-13	0.00%	0.00%	2.2E-13	0.00%	0.00%	N/A		
	SR-90	N/A			6.9E-10	0.04%	0.00%	6.9E-10	0.04%	0.00%	1.3E-10	0.04%	0.00%	1.3E-10	0.04%	0.00%	N/A		
	TC-99	N/A			4.8E-08	2.81%	0.04%	4.8E-08	2.81%	0.04%	7.9E-09	2.57%	0.05%	7.9E-09	2.57%	0.19%	N/A		
	U-234	N/A			5.5E-07	32.54%	0.52%	5.5E-07	32.54%	0.52%	1.0E-07	32.62%	0.67%	1.0E-07	32.62%	2.38%	N/A		
	U-235/236	N/A			2.9E-08	1.74%	0.03%	2.9E-08	1.74%	0.03%	5.4E-09	1.74%	0.04%	5.4E-09	1.74%	0.13%	N/A		
	U-238	N/A			1.1E-06	62.88%	1.00%	1.1E-06	62.88%	1.00%	1.9E-07	63.03%	1.30%	1.9E-07	63.03%	4.59%	N/A		
	Total Radiological Risk				1.7E-06	100.00%	1.58%	1.7E-06	100.00%	1.58%	3.1E-07	100.00%	2.06%	3.1E-07	100.00%	7.29%			

5894

TABLE B.3.2-34
(continued)

Medium	Parameter	On-Property Resident Farmer (RME)	% Total Medium Risk	% Total Receptor Risk	On-Property Resident Farmer (CT)	% Total Medium Risk	% Total Receptor Risk	On-Property Resident Child	% Total Medium Risk	% Total Receptor Risk	Great Miami Riv Rec. User	% Total Medium Risk	% Total Receptor Risk	Great Miami Riv esid. Use	% Total Medium Risk	% Total Receptor Risk	Great Miami Riv Ag. User	% Total Medium Risk	% Total Receptor Risk
Beef/Milk	CS-137	5.5E-06	0.03%	0.02%	2.8E-07	0.03%	0.01%	7.0E-07	0.01%	0.01%	N/A			N/A			N/A		
(Dust	NP-237	3.6E-08	0.00%	0.00%	1.9E-09	0.00%	0.00%	2.7E-09	0.00%	0.00%	N/A			N/A			N/A		
Affected)	PU-238	2.2E-11	0.00%	0.00%	1.1E-12	0.00%	0.00%	2.3E-12	0.00%	0.00%	N/A			N/A			N/A		
	PU-239/240	1.5E-11	0.00%	0.00%	7.8E-13	0.00%	0.00%	1.6E-12	0.00%	0.00%	N/A			N/A			N/A		
	RA-226	1.1E-04	0.59%	0.34%	5.3E-06	0.56%	0.26%	2.0E-05	0.26%	0.21%	N/A			N/A			N/A		
	RA-228	1.8E-06	0.01%	0.01%	8.4E-08	0.01%	0.00%	3.2E-07	0.00%	0.00%	N/A			N/A			N/A		
	SR-90	8.3E-05	0.43%	0.25%	3.8E-06	0.40%	0.19%	1.6E-05	0.20%	0.17%	N/A			N/A			N/A		
	TC-99	7.8E-03	40.69%	23.28%	3.7E-04	39.12%	18.09%	1.3E-03	16.76%	14.04%	N/A			N/A			N/A		
	TH-228	6.2E-09	0.00%	0.00%	3.0E-10	0.00%	0.00%	9.8E-10	0.00%	0.00%	N/A			N/A			N/A		
	TH-230	4.7E-09	0.00%	0.00%	2.2E-10	0.00%	0.00%	7.3E-10	0.00%	0.00%	N/A			N/A			N/A		
	TH-232	1.8E-08	0.00%	0.00%	8.4E-10	0.00%	0.00%	2.8E-09	0.00%	0.00%	N/A			N/A			N/A		
	U-234	6.1E-07	0.00%	0.00%	2.8E-08	0.00%	0.00%	1.1E-07	0.00%	0.00%	N/A			N/A			N/A		
	U-235/236	6.3E-08	0.00%	0.00%	2.9E-09	0.00%	0.00%	1.1E-08	0.00%	0.00%	N/A			N/A			N/A		
	U-238	1.2E-06	0.01%	0.00%	5.3E-08	0.01%	0.00%	2.1E-07	0.00%	0.00%	N/A			N/A			N/A		
	Total Radiological Risk	8.0E-03	41.76%	23.89%	3.8E-04	40.13%	18.55%	1.3E-03	17.23%	14.44%									
	Aroclor-1254	4.9E-05	0.25%	0.14%	2.5E-06	0.26%	0.12%	2.8E-05	0.36%	0.30%	N/A			N/A			N/A		
	Aroclor-1260	2.1E-04	1.10%	0.63%	1.1E-05	1.13%	0.52%	1.2E-04	1.57%	1.31%	N/A			N/A			N/A		
	Arsenic	7.3E-05	0.38%	0.22%	4.1E-06	0.43%	0.20%	1.7E-05	0.22%	0.19%	N/A			N/A			N/A		
	Benzo(a)anthracene	1.6E-04	0.85%	0.49%	8.2E-06	0.87%	0.40%	9.4E-05	1.21%	1.02%	N/A			N/A			N/A		
	Benzo(a)pyrene	5.4E-03	28.07%	16.06%	2.7E-04	28.83%	13.33%	3.1E-03	40.07%	33.57%	N/A			N/A			N/A		
	Benzo(b)fluoranthene	3.7E-04	1.91%	1.09%	1.9E-05	1.96%	0.91%	2.1E-04	2.73%	2.28%	N/A			N/A			N/A		
	Benzo(k)fluoranthene	1.5E-04	0.80%	0.46%	7.8E-06	0.82%	0.38%	8.9E-05	1.14%	0.96%	N/A			N/A			N/A		
	Beryllium	4.2E-06	0.02%	0.01%	2.4E-07	0.03%	0.01%	6.6E-07	0.01%	0.01%	N/A			N/A			N/A		
	Dibenzo(a,h)anthracene	4.0E-03	20.80%	11.90%	2.0E-04	21.37%	9.88%	2.3E-03	29.68%	24.87%	N/A			N/A			N/A		
	Dieldrin	1.5E-07	0.00%	0.00%	7.5E-09	0.00%	0.00%	8.5E-08	0.00%	0.00%	N/A			N/A			N/A		
	Indeno(1,2,3-cd)pyrene	7.8E-04	4.05%	2.32%	3.9E-05	4.16%	1.92%	4.5E-04	5.78%	4.84%	N/A			N/A			N/A		
	Total Chemical Risk	1.1E-02	58.24%	33.31%	5.7E-04	59.87%	27.67%	6.4E-03	82.77%	69.35%									
	Total	1.9E-02	100.00%	57.20%	9.4E-04	100.00%	46.22%	7.8E-03	100.00%	83.79%									
Beef/Milk	NP-237	1.9E-10	0.00%	0.00%	1.0E-11	0.00%	0.00%	1.5E-11	0.00%	0.00%	N/A			N/A			N/A		
(Groundwater	SR-90	8.3E-09	0.03%	0.00%	3.8E-10	0.03%	0.00%	1.5E-09	0.03%	0.00%	N/A			N/A			N/A		
Affected)	TC-99	8.8E-08	0.27%	0.00%	4.2E-09	0.28%	0.00%	1.5E-08	0.25%	0.00%	N/A			N/A			N/A		
	U-234	1.1E-05	33.43%	0.03%	5.0E-07	33.43%	0.02%	2.0E-06	33.44%	0.02%	N/A			N/A			N/A		
	U-235/236	5.8E-07	1.78%	0.00%	2.6E-08	1.78%	0.00%	1.0E-07	1.78%	0.00%	N/A			N/A			N/A		
	U-238	2.1E-05	64.49%	0.06%	9.6E-07	64.48%	0.05%	3.8E-06	64.50%	0.04%	N/A			N/A			N/A		
	Total Radiological Risk	3.2E-05	100.00%	0.10%	1.5E-06	100.00%	0.07%	5.9E-06	100.00%	0.06%									

5894

Medium	Parameter	Expanded Trespasser	% Total Medium Risk	% Total Receptor Risk	Off-Property Res. Farmer (Priv. Own.)	% Total Medium Risk	% Total Receptor Risk	Off-Propert Res. Farmer (Fed. Own.)	% Total Medium Risk	% Total Receptor Risk	Off-Property Res. Child (Priv. Own.)	% Total Medium Risk	% Total Receptor Risk	Off-Propert Res. Child (Fed. Own.)	% Total Medium Risk	% Total Receptor Risk	Home-builder	% Total Medium Risk	% Total Receptor Risk
Beef/Milk	NP-237	N/A			N/A			N/A			N/A			N/A			N/A		
(GMR	PU-238	N/A			N/A			N/A			N/A			N/A			N/A		
Surface Water	RA-226	N/A			N/A			N/A			N/A			N/A			N/A		
Affected)	RA-228	N/A			N/A			N/A			N/A			N/A			N/A		
	SR-90	N/A			N/A			N/A			N/A			N/A			N/A		
	TC-99	N/A			N/A			N/A			N/A			N/A			N/A		
	U-234	N/A			N/A			N/A			N/A			N/A			N/A		
	U-235/236	N/A			N/A			N/A			N/A			N/A			N/A		
	U-238	N/A			N/A			N/A			N/A			N/A			N/A		
	Total Radiological Risk																		
	Arsenic	N/A			N/A			N/A			N/A			N/A			N/A		
	Beryllium	N/A			N/A			N/A			N/A			N/A			N/A		
	Benzo(a)anthracene	N/A			N/A			N/A			N/A			N/A			N/A		
	Benzo(a)pyrene	N/A			N/A			N/A			N/A			N/A			N/A		
	Benzo(b)fluoranthene	N/A			N/A			N/A			N/A			N/A			N/A		
	bis(2-Ethylhexyl)phthalate	N/A			N/A			N/A			N/A			N/A			N/A		
	Dibenzo(a,h)anthracene	N/A			N/A			N/A			N/A			N/A			N/A		
	Dieldrin	N/A			N/A			N/A			N/A			N/A			N/A		
	Total Chemical Risk																		
	Total																		
Ambient Radon		1.9E-06		1.39%	4.4E-06		4.09%	4.4E-06		5.48%	7.9E-08		0.53%	7.9E-08		1.88%	N/A		
ALL MEDIA		1.4E-04			1.1E-04			*8.0E-05*			1.5E-05			4.2E-06			1.1E-05		

Medium	Parameter	On-Property Resident Farmer (RME)	% Total Medium Risk	% Total Receptor Risk	On-Property Resident Farmer (CT)	% Total Medium Risk	% Total Receptor Risk	On-Property Resident Child	% Total Medium Risk	% Total Receptor Risk	Great Miami Riv Rec. User	% Total Medium Risk	% Total Receptor Risk	Great Miami Riv esid. Use	% Total Medium Risk	% Total Receptor Risk	Great Miami Riv Ag. User	% Total Medium Risk	% Total Receptor Risk
Beef/Milk	NP-237	N/A			N/A			N/A			N/A			N/A			1.8E-10	0.00%	0.00%
(GMR	PU-238	N/A			N/A			N/A			N/A			N/A			4.0E-14	0.00%	0.00%
Surface Water	RA-226	N/A			N/A			N/A			N/A			N/A			2.4E-08	0.55%	0.55%
Affected)	RA-228	N/A			N/A			N/A			N/A			N/A			2.9E-10	0.01%	0.01%
	SR-90	N/A			N/A			N/A			N/A			N/A			5.2E-08	1.19%	1.18%
	TC-99	N/A			N/A			N/A			N/A			N/A			4.3E-06	97.73%	97.31%
	U-234	N/A			N/A			N/A			N/A			N/A			7.3E-09	0.17%	0.17%
	U-235/236	N/A			N/A			N/A			N/A			N/A			6.4E-10	0.01%	0.01%
	U-238	N/A			N/A			N/A			N/A			N/A			1.4E-08	0.32%	0.31%
	Total Radiological Risk																4.4E-06	99.97%	99.54%
	Arsenic	N/A			N/A			N/A			N/A			N/A			7.1E-11	0.00%	0.00%
	Beryllium	N/A			N/A			N/A			N/A			N/A			4.5E-12	0.00%	0.00%
	Benzo(a)anthracene	N/A			N/A			N/A			N/A			N/A			2.7E-11	0.00%	0.00%
	Benzo(a)pyrene	N/A			N/A			N/A			N/A			N/A			5.1E-10	0.01%	0.01%
	Benzo(b)fluoranthene	N/A			N/A			N/A			N/A			N/A			8.9E-12	0.00%	0.00%
	bis(2-Ethylhexyl)phthalate	N/A			N/A			N/A			N/A			N/A			6.1E-11	0.00%	0.00%
	Dibenzo(a,h)anthracene	N/A			N/A			N/A			N/A			N/A			5.7E-10	0.01%	0.01%
	Dieldrin	N/A			N/A			N/A			N/A			N/A			1.5E-13	0.00%	0.00%
	Total Chemical Risk																1.2E-09	0.03%	0.03%
	Total																4.4E-06	100.00%	99.57%
Ambient Radon		6.0E-05		0.18%	4.5E-06		0.22%	1.1E-06		0.01%	N/A			N/A			N/A		
ALL MEDIA		3.4E-02			2.0E-03			9.2E-03			4.2E-06			6.3E-08			4.4E-06		

N/A signifies that exposure of the receptor to the indicated medium is not applicable.

TABLE B.3.2-35
FUTURE LAND USE
SOUTH FIELD
SUMMARY OF NONCARCINOGENIC HAZARD

Medium	Parameter	Expanded Trespesser	% of Total Medium Hazard	% of Total Receptor Hazard	Off-Property Res. Farmer (Priv. Own)	% of Total Medium Hazard	% of Total Receptor Hazard	Off-Property Res. Farmer (Fed. Own.)	% of Total Medium Hazard	% of Total Receptor Hazard	Off-Property Res. Child (Priv. Own.)	% of Total Medium Hazard	% of Total Receptor Hazard	Off-Property Res. Child (Fed. Own.)	% of Total Medium Hazard	% of Total Receptor Hazard	Home-builder	% of Total Medium Hazard	% of Total Receptor Hazard
Surface Soil/	Arsenic	1.3E-03	30.62%	1.61%	N/D			N/D			N/D			N/D			1.3E-01	24.92%	24.92%
Air	Beryllium	2.8E-03	65.07%	3.43%	N/D			N/D			N/D			N/D			1.2E-02	2.28%	2.28%
	Dieldrin	1.8E-04	4.31%	0.23%	N/D			N/D			N/D			N/D			1.8E-03	0.34%	0.34%
	Tributyl phosphate	N/A			N/A			N/A			N/A			N/A			6.6E-04	0.12%	0.12%
	U-Total	N/A			N/A			N/A			N/A			N/A			3.9E-01	72.34%	72.34%
	Total	4.2E-03	100.00%	5.27%													5.4E-01	100.00%	100.00%
Sediment	Arsenic	9.4E-04	19.07%	1.17%	N/A			N/A			N/A			N/A			N/A		
	Beryllium	3.2E-03	65.08%	4.00%	N/A			N/A			N/A			N/A			N/A		
	U-TOTAL	5.8E-04	11.82%	0.73%	N/A			N/A			N/A			N/A			N/A		
	Dieldrin	2.0E-04	4.03%	0.25%	N/A			N/A			N/A			N/A			N/A		
	Total	4.9E-03	100.00%	6.14%															
Groundwater	Tributyl phosphate	N/A			N/A			N/A			N/A			N/A			N/A		
	U-Total	N/A			8.6E-01	100.00%	76.80%	8.6E-01	100.00%	76.86%	2.1E+00	100.00%	67.65%	2.1E+00	100.00%	67.72%	N/A		
	Total				8.6E-01	100.00%	76.80%	8.6E-01	100.00%	76.86%	2.1E+00	100.00%	67.65%	2.1E+00	100.00%	67.72%			
Surface	Arsenic	3.1E-04	0.43%	0.38%	N/A			N/A			N/A			N/A			N/A		
Water	Beryllium	2.6E-05	0.04%	0.03%	N/A			N/A			N/A			N/A			N/A		
	Dieldrin	2.4E-04	0.34%	0.30%	N/A			N/A			N/A			N/A			N/A		
	U-Total	7.1E-02	99.19%	87.87%	N/A			N/A			N/A			N/A			N/A		
	Total	7.1E-02	100.00%	88.59%															
GMR	Arsenic	N/A			N/A			N/A			N/A			N/A			N/A		
Surface	Beryllium	N/A			N/A			N/A			N/A			N/A			N/A		
Water	Dieldrin	N/A			N/A			N/A			N/A			N/A			N/A		
	U-TOTAL	N/A			N/A			N/A			N/A			N/A			N/A		
	Total	N/A																	
Homegrown	Arsenic	N/A			6.4E-04	97.08%	0.06%	1.7E-05	98.00%	0.00%	2.5E-03	97.08%	0.08%	6.5E-05	98.75%	0.00%	N/A		
Produce	Beryllium	N/A			4.3E-06	0.66%	0.00%	8.0E-08	0.45%	0.00%	1.7E-05	0.66%	0.00%	1.8E-07	0.28%	0.00%	N/A		
(Dust	Dieldrin	N/A			1.5E-05	2.26%	0.00%	2.7E-07	1.55%	0.00%	5.7E-05	2.26%	0.00%	6.4E-07	0.97%	0.00%	N/A		
Affected)	*Total*				6.6E-04	100.00%	0.06%	1.8E-05	100.00%	0.00%	2.5E-03	100.00%	0.08%	6.5E-05	100.00%	0.00%			
Homegrown	Tributyl phosphate	N/A			*N/A*			*N/A*			*N/A*			*N/A*			*N/A*		
Produce	U-Total	N/A			2.6E-01	100.00%	23.11%	2.6E-01	100.00%	23.13%	1.0E+00	100.00%	32.21%	1.0E+00	100.00%	32.25%	N/A		
(H20 Affected)	*Total*				2.6E-01	100.00%	23.11%	2.6E-01	100.00%	23.13%	1.0E+00	100.00%	32.21%	1.0E+00	100.00%	32.25%			
Homegrown	Arsenic	N/A			N/A			N/A			N/A			N/A			N/A		
Produce	Beryllium	N/A			N/A			N/A			N/A			N/A			N/A		
(GMR Surface	Dieldrin	N/A			N/A			N/A			N/A			N/A			N/A		
Water	U-TOTAL	N/A			N/A			N/A			N/A			N/A			N/A		
Affected)	*Total*																		
Beef/Milk	Arsenic	N/A			2.2E-04	99.77%	0.02%	2.4E-06	99.64%	0.00%	6.1E-04	99.84%	0.02%	6.7E-06	99.75%	0.00%	N/A		
(Dust	Beryllium	N/A			5.0E-07	0.22%	0.00%	8.7E-09	0.36%	0.00%	9.1E-07	0.15%	0.00%	1.6E-08	0.24%	0.00%	N/A		
Affected)	Dieldrin	N/A			8.1E-09	0.00%	0.00%	1.1E-10	0.00%	0.00%	5.5E-08	0.01%	0.00%	7.7E-10	0.01%	0.00%	N/A		
	Total				2.2E-04	100.00%	0.02%	2.4E-06	100.00%	0.00%	6.1E-04	100.00%	0.02%	6.7E-06	100.00%	0.00%			
Beef/Milk	Tributyl phosphate	N/A			N/A			N/A			N/A			N/A			N/A		
(Groundwater	U-Total	N/A			1.4E-04	100.00%	0.01%	1.4E-04	100.00%	0.01%	9.3E-04	100.00%	0.03%	9.3E-04	100.00%	0.03%	N/A		
Affected)	*Total*				1.4E-04	100.00%	0.01%	1.4E-04	100.00%	0.01%	9.3E-04	100.00%	0.03%	9.3E-04	100.00%	0.03%			
Beef/Milk	Arsenic	N/A			N/A			N/A			N/A			N/A			N/A		
	Beryllium	N/A			N/A			N/A			N/A			N/A			N/A		
(GMR Surface	Dieldrin	N/A			N/A			N/A			N/A			N/A			N/A		
Water	U-TOTAL	N/A			N/A			N/A			N/A			N/A			N/A		
Affected)	*Total*																		
ALL MEDIA		8.0E-02			1.1E+00			1.1E+00			3.1E+00			3.1E+00			5.4E-01		

FER\CRU2RI\ABQ\SF_COCN.XLS; 8/31/94; 3:55 PM

Comment 43

000265

TABLE B.3.3-35
FUTURE LAND USE
SOUTH FIELD
SUMMARY OF NONCARCINOGENIC HAZARD

Medium	Parameter	Expended Trespasser	% of Total Medium Hazard	% of Total Receptor Hazard	Off-Property Res. Farmer (Priv. Own)	% of Total Medium Hazard	% of Total Receptor Hazard	Off-Property Res. Farmer (Fed. Own.)	% of Total Medium Hazard	% of Total Receptor Hazard	Off-Property Res. Child (Priv. Own.)	% of Total Medium Hazard	% of Total Receptor Hazard	Off-Property Res. Child (Fed. Own.)	% of Total Medium Hazard	% of Total Receptor Hazard	Home-builder	% of Total Medium Hazard	% of Total Receptor Hazard
Surface Soil/ Air	Arsenic	1.3E-03	30.62%	1.61%	N/D			N/D			N/D			N/D			1.3E-01	24.92%	24.92%
	Beryllium	2.8E-03	65.07%	3.43%	N/D			N/D			N/D			N/D			1.2E-02	2.28%	2.28%
	Dieldrin	1.8E-04	4.31%	0.23%	N/D			N/D			N/D			N/D			1.8E-03	0.34%	0.34%
	Tributyl phosphate	N/A			N/A			N/A			N/A			N/A			6.6E-04	0.12%	0.12%
	U-Total	N/A			N/A			N/A			N/A			N/A			3.9E-01	72.34%	72.34%
	Total	4.2E-03	100.00%	5.27%													5.4E-01	100.00%	100.00%
Sediment	Arsenic	9.4E-04	19.07%	1.17%	N/A			N/A			N/A			N/A			N/A		
	Beryllium	3.2E-03	65.08%	4.00%	N/A			N/A			N/A			N/A			N/A		
	U-TOTAL	5.8E-04	11.82%	0.73%	N/A			N/A			N/A			N/A			N/A		
	Dieldrin	2.0E-04	4.03%	0.25%	N/A			N/A			N/A			N/A			N/A		
	Total	4.9E-03	100.00%	6.14%															
Groundwater	Tributyl phosphate	N/A			N/A			N/A			N/A			N/A			N/A		
	U-Total	N/A			8.6E-01	100.00%	76.80%	8.6E-01	100.00%	76.86%	2.1E+00	100.00%	67.65%	2.1E+00	100.00%	67.72%	N/A		
	Total				8.6E-01	100.00%	76.80%	8.6E-01	100.00%	76.86%	2.1E+00	100.00%	67.65%	2.1E+00	100.00%	67.72%			
Surface Water	Arsenic	3.1E-04	0.43%	0.38%	N/A			N/A			N/A			N/A			N/A		
	Beryllium	2.6E-05	0.04%	0.03%	N/A			N/A			N/A			N/A			N/A		
	Dieldrin	2.4E-04	0.34%	0.30%	N/A			N/A			N/A			N/A			N/A		
	U-Total	7.1E-02	99.19%	87.87%	N/A			N/A			N/A			N/A			N/A		
	Total	7.1E-02	100.00%	88.59%															
GMR Surface Water	Arsenic	N/A			N/A			N/A			N/A			N/A			N/A		
	Beryllium	N/A			N/A			N/A			N/A			N/A			N/A		
	Dieldrin	N/A			N/A			N/A			N/A			N/A			N/A		
	U-TOTAL	N/A			N/A			N/A			N/A			N/A			N/A		
	Total	N/A																	
Homegrown Produce (Dust Affected)	Arsenic	N/A			6.4E-04	97.08%	0.06%	1.7E-05	98.00%	0.00%	2.5E-03	97.08%	0.08%	6.5E-05	98.75%	0.00%	N/A		
	Beryllium	N/A			4.3E-06	0.66%	0.00%	8.0E-08	0.45%	0.00%	1.7E-05	0.66%	0.00%	1.8E-07	0.28%	0.00%	N/A		
	Dieldrin	N/A			1.5E-05	2.26%	0.00%	2.7E-07	1.55%	0.00%	5.7E-05	2.26%	0.00%	6.4E-07	0.97%	0.00%	N/A		
	Total				6.6E-04	100.00%	0.06%	1.8E-05	100.00%	0.00%	2.5E-03	100.00%	0.08%	6.5E-05	100.00%	0.00%			
Homegrown Produce (H20 Affected)	Tributyl phosphate	N/A			N/A			N/A			N/A			N/A			N/A		
	U-Total	N/A			2.6E-01	100.00%	23.11%	2.6E-01	100.00%	23.13%	1.0E+00	100.00%	32.21%	1.0E+00	100.00%	32.25%	N/A		
	Total				2.6E-01	100.00%	23.11%	2.6E-01	100.00%	23.13%	1.0E+00	100.00%	32.21%	1.0E+00	100.00%	32.25%			
Homegrown Produce (GMR Surface Water Affected)	Arsenic	N/A			N/A			N/A			N/A			N/A			N/A		
	Beryllium	N/A			N/A			N/A			N/A			N/A			N/A		
	Dieldrin	N/A			N/A			N/A			N/A			N/A			N/A		
	U-TOTAL	N/A			N/A			N/A			N/A			N/A			N/A		
	Total																		
Beef/Milk (Dust Affected)	Arsenic	N/A			2.2E-04	99.77%	0.02%	2.4E-06	99.64%	0.00%	6.1E-04	99.84%	0.02%	6.7E-06	99.75%	0.00%	N/A		
	Beryllium	N/A			5.0E-07	0.22%	0.00%	8.7E-09	0.36%	0.00%	9.1E-07	0.15%	0.00%	1.6E-08	0.24%	0.00%	N/A		
	Dieldrin	N/A			8.1E-09	0.00%	0.00%	1.1E-10	0.00%	0.00%	5.5E-08	0.01%	0.00%	7.7E-10	0.01%	0.00%	N/A		
	Total				2.2E-04	100.00%	0.02%	2.4E-06	100.00%	0.00%	6.1E-04	100.00%	0.02%	6.7E-06	100.00%	0.00%			
Beef/Milk (Groundwater Affected)	Tributyl phosphate	N/A			N/A			N/A			N/A			N/A			N/A		
	U-Total	N/A			1.4E-04	100.00%	0.01%	1.4E-04	100.00%	0.01%	9.3E-04	100.00%	0.03%	9.3E-04	100.00%	0.03%	N/A		
	Total				1.4E-04	100.00%	0.01%	1.4E-04	100.00%	0.01%	9.3E-04	100.00%	0.03%	9.3E-04	100.00%	0.03%			
Beef/Milk (GMR Surface Water Affected)	Arsenic	N/A			N/A			N/A			N/A			N/A			N/A		
	Beryllium	N/A			N/A			N/A			N/A			N/A			N/A		
	Dieldrin	N/A			N/A			N/A			N/A			N/A			N/A		
	U-TOTAL	N/A			N/A			N/A			N/A			N/A			N/A		
	Total																		
ALL MEDIA		8.0E-02			1.1E+00			1.1E+00			3.1E+00			3.1E+00			5.4E-01		

FER\CRU2RI\ABQ\SF_COCN.XLS; 8/31/94; 5:49 PM

Comment 53

000266

5894

TABLE B.3.2-35
(continued)

Medium	Parameter	On-Property Resident Farmer (RME)	% of Total Medium Hazard	% of Total Receptor Hazard	On-Property Resident Farmer (CT)	% of Total Medium Hazard	% of Total Receptor Hazard	On-Property Resident Child	% of Total Medium Hazard	% of Total Receptor Hazard	Great Miami Riv. Rec. User	% Total Medium Hazard	% Total Receptor Hazard	Great Miami Riv. Resid. Use	% Total Medium Hazard	% Total Receptor Hazard	Great Miami Riv. Ag. User	% Total Medium Hazard	% Total Receptor Hazard
Surface Soil/	Arsenic	6.2E-02	78.67%	0.26%	2.2E-02	91.10%	0.21%	3.1E-01	91.10%	0.50%	N/A			N/A			N/A		
Air	Beryllium	1.5E-02	19.50%	0.07%	1.9E-03	7.71%	0.02%	2.6E-02	7.71%	0.04%	N/A			N/A			N/A		
	Dieldrin	1.4E-03	1.83%	0.01%	2.9E-04	1.19%	0.00%	4.1E-03	1.19%	0.01%	N/A			N/A			N/A		
	Total	7.8E-02	100.00%	0.33%	2.5E-02	100.00%	0.23%	3.4E-01	100.00%	0.55%									
Sediment	Arsenic	N/A			N/A			N/A			N/A			N/A			N/A		
	Beryllium	N/A			N/A			N/A			N/A			N/A			N/A		
	U-TOTAL	N/A			N/A			N/A			N/A			N/A			N/A		
	Dieldrin	N/A			N/A			N/A			N/A			N/A			N/A		
	Total																		
Groundwater	Tributyl phosphate	8.6E-03	0.05%	0.04%	4.0E-03	0.05%	0.04%	2.0E-02	0.05%	0.03%	N/A			N/A			N/A		
	U-Total	1.8E+01	99.95%	75.66%	8.2E+00	99.95%	77.19%	4.1E+01	99.95%	65.14%	N/A			N/A			N/A		
	Total	1.8E+01	100.00%	75.70%	8.3E+00	100.00%	77.23%	4.1E+01	100.00%	65.17%									
Surface	Arsenic	N/A			N/A			N/A			N/A			N/A			N/A		
Water	Beryllium	N/A			N/A			N/A			N/A			N/A			N/A		
	Dieldrin	N/A			N/A			N/A			N/A			N/A			N/A		
	U-Total	N/A			N/A			N/A			N/A			N/A			N/A		
	Total	N/A			N/A			N/A			N/A			N/A			N/A		
GMR	Arsenic	N/A			N/A			N/A			7.9E-07	31.81%	31.81%	1.9E-06	1.39%	1.39%	N/A		
Surface	Beryllium	N/A			N/A			N/A			2.8E-09	0.11%	0.11%	1.5E-08	0.01%	0.01%	N/A		
Water	Dieldrin	N/A			N/A			N/A			5.7E-09	0.23%	0.23%	5.4E-07	0.40%	0.40%	N/A		
	U-TOTAL	N/A			N/A			N/A			1.7E-06	67.85%	67.85%	1.3E-04	98.20%	98.20%	N/A		
	Total	N/A			N/A			N/A			*2.5E-06*	100.00%	100.00%	*1.4E-04*	100.00%	100.00%	N/A		
Homegrown	Arsenic	1.0E-01	24.96%	0.45%	4.5E-02	24.96%	0.42%	4.0E-01	24.97%	0.64%	N/A			N/A			N/A		
Produce	Beryllium	2.0E-04	0.05%	0.00%	8.7E-05	0.05%	0.00%	7.9E-04	0.05%	0.00%	N/A			N/A			N/A		
(Dust	Dieldrin	3.2E-01	74.99%	1.34%	1.3E-01	74.99%	1.26%	1.2E+00	74.98%	1.93%	N/A			N/A			N/A		
Affected)	*Total*	4.2E-01	100.00%	1.79%	1.8E-01	100.00%	1.68%	1.6E+00	100.00%	2.58%									
Homegrown	Tributyl phosphate	2.5E-03	0.05%	0.01%	1.1E-03	0.05%	0.01%	9.6E-03	0.05%	0.02%	N/A			N/A			N/A		
Produce	U-Total	5.1E+00	99.95%	21.53%	2.2E+00	99.95%	20.24%	1.9E+01	99.95%	31.02%	N/A			N/A			N/A		
(H20 Affected)	*Total*	5.1E+00	100.00%	21.54%	2.2E+00	100.00%	20.25%	1.9E+01	100.00%	31.03%									
Homegrown	Arsenic	N/A			N/A			N/A			N/A			N/A			7.4E-07	1.86%	1.86%
Produce	Beryllium	N/A			N/A			N/A			N/A			N/A			3.9E-09	0.01%	0.01%
(GMR Surface	Dieldrin	N/A			N/A			N/A			N/A			N/A			6.4E-07	1.62%	1.61%
Water	U-TOTAL																3.8E-05	96.51%	96.13%
Affected)	*Total*																4.0E-05	100.00%	99.61%
Beef/Milk	Aroclor-1254	1.4E-01	99.73%	0.59%	6.1E-02	99.74%	0.57%	3.8E-01	99.58%	0.61%	N/A			N/A			N/A		
(Dust	Aroclor-1260	1.9E-04	0.14%	0.00%	8.7E-05	0.14%	0.00%	3.6E-04	0.09%	0.00%	N/A			N/A			N/A		
Affected)	Arsenic	1.9E-04	0.13%	0.00%	7.3E-05	0.12%	0.00%	1.2E-03	0.32%	0.00%	N/A			N/A			N/A		
	Total	1.4E-01	100.00%	0.60%	6.1E-02	100.00%	0.57%	3.8E-01	100.00%	0.61%									
Beef/Milk	Tributyl phosphate	7.6E-03	74.08%	0.03%	3.4E-03	76.28%	0.03%	1.7E-02	48.52%	0.03%	N/A			N/A			N/A		
(Groundwater	U-Total	2.7E-03	25.92%	0.01%	1.0E-03	23.72%	0.01%	1.8E-02	51.48%	0.03%	N/A			N/A			N/A		
Affected)	*Total*	1.0E-02	100.00%	0.04%	4.4E-03	100.00%	0.04%	3.5E-02	100.00%	0.06%									
Beef/Milk	Arsenic	N/A			N/A						N/A			N/A			1.4E-07	86.81%	0.34%
	Beryllium	N/A			N/A						N/A			N/A			2.1E-10	0.13%	0.00%
(GMR Surface	Dieldrin	N/A			N/A						N/A			N/A			1.9E-10	0.12%	0.00%
Water	U-TOTAL																2.0E-08	12.94%	0.05%
Affected)	*Total*																1.6E-07	100.00%	0.39%
ALL MEDIA		2.3E+01			1.1E+01			6.3E+01			2.5E-06			1.4E-04			4.0E-05		

N/A signifies that exposure of the receptor to the indicated medium is not applicable.

N/D signifies the hazard was not calculated because toxicity data are not available.

FER\CRU2RI\ABQ\SF_COCN.XLS; 8/31/94; 3:55 PM

Comment 43

000267

5894

TABLE B-3.2-35
(continued)

Medium	Parameter	On-Property Resident Farmer (RME)	% of Total Medium Hazard	% of Total Receptor Hazard	On-Property Resident Farmer (CT)	% of Total Medium Hazard	% of Total Receptor Hazard	On-Property Resident Child	% of Total Medium Hazard	% of Total Receptor Hazard	Great Miami Riv. Rec. User	% Total Medium Hazard	% Total Receptor Hazard	Great Miami Riv. Resid. Use	% Total Medium Hazard	% Total Receptor Hazard	Great Miami Riv. Ag. User	% Total Medium Hazard	% Total Receptor Hazard
Surface Soil/	Arsenic	6.2E-02	78.67%	0.26%	2.2E-02	91.10%	0.21%	3.1E-01	91.10%	0.50%	N/A			N/A			N/A		
Air	Beryllium	1.5E-02	19.50%	0.07%	1.9E-03	7.71%	0.02%	2.6E-02	7.71%	0.04%	N/A			N/A			N/A		
	Dieldrin	1.4E-03	1.83%	0.01%	2.9E-04	1.19%	0.00%	4.1E-03	1.19%	0.01%	N/A			N/A			N/A		
	Total	7.8E-02	100.00%	0.33%	2.5E-02	100.00%	0.23%	3.4E-01	100.00%	0.55%									
Sediment	Arsenic	N/A			N/A			N/A			N/A			N/A			N/A		
	Beryllium	N/A			N/A			N/A			N/A			N/A			N/A		
	U-TOTAL	N/A			N/A			N/A			N/A			N/A			N/A		
	Dieldrin	N/A			N/A			N/A			N/A			N/A			N/A		
	Total																		
Groundwater	Tributyl phosphate	8.6E-03	0.05%	0.04%	4.0E-03	0.05%	0.04%	2.0E-02	0.05%	0.03%	N/A			N/A			N/A		
	U-Total	1.8E+01	99.95%	75.66%	8.2E+00	99.95%	77.19%	4.1E+01	99.95%	65.14%	N/A			N/A			N/A		
	Total	1.8E+01	100.00%	75.70%	8.3E+00	100.00%	77.23%	4.1E+01	100.00%	65.17%									
Surface	Arsenic	N/A			N/A			N/A			N/A			N/A			N/A		
Water	Beryllium	N/A			N/A			N/A			N/A			N/A			N/A		
	Dieldrin	N/A			N/A			N/A			N/A			N/A			N/A		
	U-Total	N/A			N/A			N/A			N/A			N/A			N/A		
	Total	N/A			N/A			N/A			N/A			N/A			N/A		
GMR	Arsenic	N/A			N/A			N/A			7.9E-07	31.81%	31.81%	1.9E-06	1.39%	1.39%	N/A		
Surface	Beryllium	N/A			N/A			N/A			2.8E-09	0.11%	0.11%	1.5E-08	0.01%	0.01%	N/A		
Water	Dieldrin	N/A			N/A			N/A			5.7E-09	0.23%	0.23%	5.4E-07	0.40%	0.40%	N/A		
	U-TOTAL	N/A			N/A			N/A			1.7E-06	67.85%	67.85%	1.3E-04	98.20%	98.20%	N/A		
	Total	N/A			N/A			N/A			*2.5E-06*	100.00%	100.00%	*1.4E-04*	100.00%	100.00%	N/A		
Homegrown	Arsenic	1.0E-01	24.96%	0.45%	4.5E-02	24.96%	0.42%	4.0E-01	24.97%	0.64%	N/A			N/A			N/A		
Produce	Beryllium	2.0E-04	0.05%	0.00%	8.7E-05	0.05%	0.00%	7.9E-04	0.05%	0.00%	N/A			N/A			N/A		
(Dust	Dieldrin	3.2E-01	74.99%	1.34%	1.3E-01	74.99%	1.26%	1.2E+00	74.98%	1.93%	N/A			N/A			N/A		
Affected)	*Total*	4.2E-01	100.00%	1.79%	1.8E-01	100.00%	1.68%	1.6E+00	100.00%	2.58%									
Homegrown	Tributyl phosphate	2.5E-03	0.05%	0.01%	1.1E-03	0.05%	0.01%	9.6E-03	0.05%	0.02%	N/A			N/A			N/A		
Produce	U-Total	5.1E+00	99.95%	21.53%	2.2E+00	99.95%	20.24%	1.9E+01	99.95%	31.02%	N/A			N/A			N/A		
(H20 Affected)	*Total*	5.1E+00	100.00%	21.54%	2.2E+00	100.00%	20.25%	1.9E+01	100.00%	31.03%									
Homegrown	Arsenic	N/A			N/A			N/A			N/A			N/A			7.4E-07	1.86%	1.86%
Produce	Beryllium	N/A			N/A			N/A			N/A			N/A			3.9E-09	0.01%	0.01%
(GMR Surface	Dieldrin	N/A			N/A			N/A			N/A			N/A			6.4E-07	1.62%	1.61%
Water	U-TOTAL																3.8E-05	96.51%	96.13%
Affected)	*Total*																4.0E-05	100.00%	99.61%
Beef/Milk	Aroclor-1254	1.4E-01	99.73%	0.59%	6.1E-02	99.74%	0.57%	3.8E-01	99.58%	0.61%	N/A			N/A			N/A		
(Dust	Aroclor-1260	1.9E-04	0.14%	0.00%	8.7E-05	0.14%	0.00%	3.6E-04	0.09%	0.00%	N/A			N/A			N/A		
Affected)	Arsenic	1.9E-04	0.13%	0.00%	7.3E-05	0.12%	0.00%	1.2E-03	0.32%	0.00%	N/A			N/A			N/A		
	Total	1.4E-01	100.00%	0.60%	6.1E-02	100.00%	0.57%	3.8E-01	100.00%	0.61%									
Beef/Milk	Tributyl phosphate	7.6E-03	74.08%	0.03%	3.4E-03	76.28%	0.03%	1.7E-02	48.52%	0.03%	N/A			N/A			N/A		
(Groundwater	U-Total	2.7E-03	25.92%	0.01%	1.0E-03	23.72%	0.01%	1.8E-02	51.48%	0.03%	N/A			N/A			N/A		
Affected)	*Total*	1.0E-02	100.00%	0.04%	4.4E-03	100.00%	0.04%	3.5E-02	100.00%	0.06%									
Beef/Milk	Arsenic	N/A			N/A						N/A			N/A			1.4E-07	86.81%	0.34%
	Beryllium	N/A			N/A						N/A			N/A			2.1E-10	0.13%	0.00%
(GMR Surface	Dieldrin	N/A			N/A						N/A			N/A			1.9E-10	0.12%	0.00%
Water	U-TOTAL																2.0E-08	12.94%	0.05%
Affected)	*Total*																1.6E-07	100.00%	0.39%
ALL MEDIA		2.3E+01			1.1E+01			6.3E+01			2.5E-06			1.4E-04			4.0E-05		

N/A signifies that exposure of the receptor to the indicated medium is not applicable.

N/D signifies the hazard was not calculated because toxicity data are not available.

FER\CRU2RI\ABQ\SF_COCN.XLS; 8/31/94; 5:49 PM

Comment 53

000268

TABLE B.3.3-1

INACTIVE FLYASH PILE
EXPOSURE POINT CONCENTRATIONS FOR SCENARIOS EVALUATED

Current Land Use	Receptor	Direct Contact Medium	Route of Exposure	Exposure Point Concentration
Current Access Controls (current use of FEMP continues, DOE ownership)	Trespassing Youth	surface soil	incidental ingestion dermal contact external radiation	surface soil within subunit
		air	inhalation of particulates, radionuclides, volatiles, and gases	maximum estimated on-subunit current concentrations derived from airborne soil air modeling results
		surface water	incidental ingestion dermal contact	surface water within subunit
		sediment	incidental ingestion dermal contact external radiation	sediment within subunit
	Off-Property Resident Farmer (adult and child), homegrown produce off-property, livestock grazing off-property	air	inhalation of particulates, volatiles, and gases	maximum estimated off-property current concentrations derived from airborne soil air modeling concentrations
		plants (homegrown produce)	ingestion of fruits and vegetables	maximum estimated off-property current concentrations derived from deposited airborne soil air modeling results
		livestock (grazing off-property)	ingestion of milk and beef	maximum estimated off-property current concentrations derived from deposited airborne soil air modeling results
	Groundskeeper	air	inhalation of particulates, volatiles, and gases	maximum estimated on-subunit current concentration derived from air modeling
		surface soil	ingestion dermal contact external radiation	surface soil within subunit

000269

5894

TABLE B.3.3-1
(Continued)

Current Land Use	Receptor		Direct Contact Medium	Route of Exposure	Exposure Point Concentration
Current with Access Controls (current use of FEMP continues, DOE ownership) (continued)	Great Miami River Users	Recreational User	surface water	ingestion dermal contact	estimated concentrations in the Great Miami River
			fish	ingestion	estimated concentrations in the Great Miami River
		Agricultural User	plants (homegrown produce irrigated with water from Great Miam River)	ingestion of fruit and vegetables	estimated concentrations in the Great Miami River
			livestock (grazing on crops irrigated with water from Great Miami River)	ingestion of beef and milk	estimated concentrations in the Great Miami River
		~~Residential~~ ***Household*** User	surface water	ingestion dermal contact inhalation of particulates, volatiles, and gases	estimated concentrations in the Great Miami River
Current without Access Controls (current use of FEMP continues)	User of Meat and Milk Products		livestock (grazing on-property)	ingestion of milk and beef	maximum estimated on-property current concentrations derived from deposited IFP surface soil air modeling results

000270

5894

TABLE B.3.3-1
(Continued)

Future Land Use	Receptor	Direct Contact Medium	Route of Exposure	Exposure Point Concentration
Federal Ownership	Future Off-Property Farmer (adult and child), homegrown produce off-property, livestock grazing off-property, groundwater off-property	air	inhalation of particulates, volatiles, and gases	maximum estimated off-property future concentrations derived from airborne soil air modeling results
		plants (homegrown produce)	ingestion	maximum estimated off-property future concentrations derived from deposited airborne soil air modeling and groundwater modeling results
		livestock (grazing at property boundary)	ingestion of milk and beef	maximum estimated off-property future concentrations derived from deposited airborne soil air modeling and groundwater modeling results
		groundwater	ingestion dermal contact inhalation	modeled groundwater concentrations off-site at time when concentration is greatest (South Field and Inactive Flyash Pile combined)
	Expanded Trespasser (youth)	air	inhalation of particulates, radionuclides, volatiles, and gases	maximum estimated on-subunit airborne soil modeling results
		surface water	incidental ingestion dermal contact	surface water within subunit
		sediment	ingestion dermal contact external radiation	sediment within subunit
		surface soil	ingestion dermal contact external radiation	surface soil within subunit

5894

TABLE B.3.3-1
(Continued)

Future Land Use	Receptor		Direct Contact Medium	Route of Exposure	Exposure Point Concentration
Federal Ownership (Continued)	Great Miami River Users	Recreational User	surface water	ingestion dermal contact	estimated concentrations in the Great Miami River
			fish	ingestion	estimated concentrations in the Great Miami River
		Agricultural User	plants (homegrown produce irrigated with water from Great Miami River)	ingestion of fruits and vegetables	estimated concentrations in the Great Miami River
			livestock (grazing on crops irrigated with water from Great Miami River)	ingestion of beef and milk	estimated concentrations in the Great Miami River
		Residential User	surface water	ingestion dermal contact inhalation of particulates, volatiles, and gases	estimated concentrations in the Great Miami River
Without Federal Ownership	*Future Off-Property Farmer (adult and child), homegrown produce off-property, livestock grazing off-property, groundwater off-property*		*air*	*inhalation of particulates, volatiles, and gases*	*maximum estimated off-property future concentrations derived from airborne soil air modeling results*
			plants (homegrown produce)	*ingestion*	*maximum estimated off-property future concentrations derived from deposited airborne soil air modeling and groundwater modeling results*
			livestock (grazing at property boundary)	*ingestion of milk and beef*	*maximum estimated off-property future concentrations derived from deposited airborne soil air modeling and groundwater modeling results*
			groundwater	*ingestion* *dermal contact* *inhalation*	*modeled groundwater concentrations off-site at time when concentration is greatest (South Field and Inactive Flyash Pile combined)*

TABLE B.3.3-1
(Continued)

Future Land Use	Receptor	Direct Contact Medium	Route of Exposure	Exposure Point Concentration
Without Federal Ownership (Continued)	Future On-Property Resident Farmer (adult and child) located adjacent to subunit, homegrown produce on-property, livestock grazing on-property, groundwater on-property, RME and CT estimates	air	inhalation of particulates, volatiles, gases, and indoor radon	maximum estimated on-property future concentrations from airborne soil modeling results
		plants (homegrown produce)	ingestion of fruits and vegetables	maximum estimated on-property future concentrations derived from deposited airborne soil air modeling and groundwater modeling results
		livestock (grazing on property)	ingestion of milk and beef	maximum estimated on-property future concentrations derived from deposited airborne soil air modeling and groundwater modeling results
		groundwater	incidental ingestion dermal contact inhalation	modeled groundwater concentrations underlying Inactive Flyash Pile at time when concentration is greatest (South Field and Inactive Flyash Pile combined)

TABLE B.3.3-1
(Continued)

Future Land Use	Receptor	Direct Contact Medium	Route of Exposure	Exposure Point Concentration
Without Federal Ownership (Continued)	Future On-Property Resident Farmer (adult and child) located adjacent to subunit, homegrown produce on-property, livestock grazing on-property, groundwater on-property, RME and CT estimates (continued)	surface soil	incidental ingestion dermal contact external radiation	not quantified; farmer is living and farming adjacent to subunit and therefore, not in direct contact with surface soil
	Future Homebuilder	waste material/subsurface soil	external radiation incidental ingestion dermal contact	not quantified; no building on Inactive Flyash Pile anticipated
		air	inhalation of particulates, volatiles, and gases	not quantified; no building on the Inactive Flyash Pile anticipated
	Future Perched Groundwater User, homegrown produce on-subunit, livestock grazing on-subunit, groundwater on-property (Solid Waste Landfill and Lime Sludge Ponds only)	air	inhalation particulates, volatiles, gases, and indoor radon	not quantified; no perched groundwater user was evaluated for the Inactive Flyash Pile because no useable perched water from the Inactive Flyash Pile is available.
		plants (home grown produce)	ingestion of fruits and vegetables	not quantified; no perched groundwater user was evaluated for the Inactive Flyash Pile because no useable perched water from the Inactive Flyash Pile is available.
		livestock (grazing on property)	ingestion of milk and beef	not quantified; no perched groundwater user was evaluated for the Inactive Flyash Pile because no useable perched water from the Inactive Flyash Pile is available.
		perched groundwater directly underlying subunit	ingestion, dermal contact, and inhalation of volatiles released during household use	not quantified; no useable perched groundwater at Inactive Flyash Pile
		soil	incidental ingestion dermal contact external radiation	not quantified; no perched groundwater user was evaluated for the Inactive Flyash Pile because no useable perched water from the Inactive Flyash Pile is available.

Comment No. B-56, *49*

58.94

000274

B.3.3-29
INACTIVE FLYASH PILE
CURRENT LAND USE
SUMMARY OF TOTAL CARCINOGENIC RISK

Medium	Parameter	Trespassing Youth	% Total Medium Risk	% Total Receptor Risk	Off-Property Resident Farmer	% Total Medium Risk	% Total Receptor Risk	Off-Property Resident Child	% Total Medium Risk	% Total Receptor Risk	User of Milk and Meat	% Total Medium Risk	% Total Receptor Risk
Surface Soil	NP-237	1.3E-08	0.10%	0.08%	1.6E-10	0.25%	0.03%	2.9E-12	0.15%	0.00%	N/A		
	PU-238	2.4E-10	0.00%	0.00%	1.3E-10	0.20%	0.02%	2.4E-12	0.12%	0.00%	N/A		
	PU-239/240	6.5E-11	0.00%	0.00%	3.3E-11	0.05%	0.01%	6.0E-13	0.03%	0.00%	N/A		
	RA-226	2.6E-06	19.83%	16.59%	5.8E-10	0.88%	0.09%	1.0E-11	0.52%	0.01%	N/A		
	RA-228	1.4E-06	10.79%	9.02%	6.5E-11	0.10%	0.01%	1.2E-12	0.06%	0.00%	N/A		
	SR-90	3.7E-10	0.00%	0.00%	2.2E-12	0.00%	0.00%	4.1E-14	0.00%	0.00%	N/A		
	TH-228	3.2E-06	25.18%	21.06%	8.8E-09	13.48%	1.44%	1.6E-10	7.95%	0.20%	N/A		
	TH-230	1.2E-09	0.01%	0.01%	3.4E-09	5.12%	0.55%	6.1E-11	3.02%	0.08%	N/A		
	TH-232	4.2E-06	32.88%	27.50%	1.1E-08	16.34%	1.75%	1.9E-10	9.64%	0.25%	N/A		
	U-234	3.8E-09	0.03%	0.02%	9.4E-09	14.31%	1.53%	1.7E-10	8.44%	0.22%	N/A		
	U-235/236	3.1E-08	0.24%	0.20%	6.1E-10	0.94%	0.10%	1.1E-11	0.55%	0.01%	N/A		
	U-238	7.5E-08	0.58%	0.49%	1.9E-08	29.37%	3.15%	3.5E-10	17.32%	0.44%	N/A		
	Total Radiological Risk	1.2E-05	89.65%	74.99%	5.3E-08	81.04%	8.68%	9.6E-10	47.80%	1.22%			
	Arsenic	7.8E-07	6.03%	5.04%	1.2E-08	17.82%	1.91%	9.9E-10	49.04%	1.25%	N/A		
	Beryllium	2.1E-07	1.64%	1.37%	4.5E-10	0.68%	0.07%	3.8E-11	1.87%	0.05%	N/A		
	Dibenzo(a,h)anthracene	3.5E-07	2.69%	2.25%	3.1E-10	0.47%	0.05%	2.6E-11	1.29%	0.03%	N/A		
	Total Chemical Risk	1.3E-06	10.35%	8.66%	1.2E-08	18.96%	2.03%	1.0E-09	52.20%	1.34%			
	Total	1.3E-05	100.00%	83.64%	6.5E-08	100.00%	10.71%	2.0E-09	100.00%	2.56%			
Sediment	NP-237	4.2E-09	0.20%	0.03%	N/A			N/A			N/A		
	PU-238	6.7E-11	0.00%	0.00%	N/A			N/A			N/A		
	PU-239/240	1.8E-11	0.00%	0.00%	N/A			N/A			N/A		
	RA-226	8.5E-07	40.17%	5.53%	N/A			N/A			N/A		
	RA-228	4.6E-07	21.86%	3.01%	N/A			N/A			N/A		
	SR-90	1.2E-10	0.01%	0.00%	N/A			N/A			N/A		
	U-234	4.8E-10	0.02%	0.00%	N/A			N/A			N/A		
	U-235/236	9.3E-09	0.44%	0.06%	N/A			N/A			N/A		
	U-238	2.1E-08	1.00%	0.14%	N/A			N/A			N/A		
	Total Radiological Risk	1.4E-06	63.69%	8.76%									
	Arsenic	5.9E-07	28.01%	3.85%	N/A			N/A			N/A		
	Beryllium	6.7E-08	3.14%	0.43%	N/A			N/A			N/A		
	Dibenzo(a,h)anthracene	1.1E-07	5.16%	0.71%	N/A			N/A			N/A		
	Total Chemical Risk	7.7E-07	36.31%	4.99%									
	Total	2.1E-06	100.00%	13.76%									

5894

Comment No. 43

B.3.3-29
(continued)

Medium	Parameter	Groundskeeper	% Total Medium Risk	% Total Receptor Risk	Great Miami River Rec. User	% Total Medium Risk	% Total Receptor Risk	Great Miami River Resid. User	% Total Medium Risk	% Total Receptor Risk	Great Miami River Ag. User	% Total Medium Risk	% Total Receptor Risk
Surface Soil	NP-237	5.0E-08	0.10%	0.10%	N/A			N/A			N/A		
	PU-238	1.8E-09	0.00%	0.00%	N/A			N/A			N/A		
	PU-239/240	4.9E-10	0.00%	0.00%	N/A			N/A			N/A		
	RA-226	9.6E-06	19.67%	19.45%	N/A			N/A			N/A		
	RA-228	5.2E-06	10.64%	10.52%	N/A			N/A			N/A		
	SR-90	2.7E-09	0.01%	0.01%	N/A			N/A			N/A		
	TH-228	1.2E-05	24.83%	24.55%	N/A			N/A			N/A		
	TH-230	9.5E-09	0.02%	0.02%	N/A			N/A			N/A		
	TH-232	1.6E-05	32.43%	32.07%	N/A			N/A			N/A		
	U-234	3.0E-08	0.06%	0.06%	N/A			N/A			N/A		
	U-235/236	1.2E-07	0.24%	0.24%	N/A			N/A			N/A		
	U-238	3.1E-07	0.64%	0.63%	N/A			N/A			N/A		
	Total Radiological Risk	4.3E-05	88.64%	87.65%									
	Arsenic	3.0E-06	6.20%	6.13%	N/A			N/A			N/A		
	Beryllium	9.6E-07	1.95%	1.93%	N/A			N/A			N/A		
	Dibenzo(a,h)anthracene	1.6E-06	3.21%	3.17%	N/A			N/A			N/A		
	Total Chemical Risk	5.6E-06	11.36%	11.24%									
	Total	4.9E-05	100.00%	98.89%									
Sediment	NP-237	N/A			N/A			N/A			N/A		
	PU-238	N/A			N/A			N/A			N/A		
	PU-239/240	N/A			N/A			N/A			N/A		
	RA-226	N/A			N/A			N/A			N/A		
	RA-228	N/A			N/A			N/A			N/A		
	SR-90	N/A			N/A			N/A			N/A		
	U-234	N/A			N/A			N/A			N/A		
	U-235/236	N/A			N/A			N/A			N/A		
	U-238	N/A			N/A			N/A			N/A		
	Total Radiological Risk												
	Arsenic	N/A			N/A			N/A			N/A		
	Beryllium	N/A			N/A			N/A			N/A		
	Dibenzo(a,h)anthracene	N/A			N/A			N/A			N/A		
	Total Chemical Risk												
	Total												

5894

Comment No. 43

B.3.3-29
(continued)

Medium	Parameter	Trespassing Youth	% Total Medium Risk	% Total Receptor Risk	Off-Property Resident Farmer	% Total Medium Risk	% Total Receptor Risk	Off-Property Resident Child	% Total Medium Risk	% Total Receptor Risk	User of Milk and Meat	% Total Medium Risk	% Total Receptor Risk
Surface Water	NP-237	3.2E-09	0.96%	0.02%	N/A			N/A			N/A		
	PU-238	3.9E-09	1.16%	0.03%	N/A			N/A			N/A		
	PU-239/240	2.9E-10	0.09%	0.00%	N/A			N/A			N/A		
	RA-226	6.1E-09	1.83%	0.04%	N/A			N/A			N/A		
	RA-228	7.9E-10	0.24%	0.01%	N/A			N/A			N/A		
	SR-90	1.1E-10	0.03%	0.00%	N/A			N/A			N/A		
	U-234	5.7E-08	16.97%	0.37%	N/A			N/A			N/A		
	U-235/236	3.5E-09	1.05%	0.02%	N/A			N/A			N/A		
	U-238	9.8E-08	29.16%	0.63%	N/A			N/A			N/A		
	Total Radiological Risk	1.7E-07	51.48%	1.12%									
	Arsenic	1.3E-07	38.65%	0.84%	N/A			N/A			N/A		
	Beryllium	2.7E-08	7.95%	0.17%	N/A			N/A			N/A		
	Dibenzo(a,h)anthracene	6.4E-09	1.92%	0.04%	N/A			N/A			N/A		
	Total Chemical Risk	1.6E-07	48.52%	1.06%									
	Total	3.4E-07	100.00%	2.18%									
Surface Water (includes fish pathway for GMR users)	NP-237	N/A			N/A			N/A			N/A		
	PU-238	N/A			N/A			N/A			N/A		
	PU-239/240	N/A			N/A			N/A			N/A		
	RA-226	N/A			N/A			N/A			N/A		
	RA-228	N/A			N/A			N/A			N/A		
	SR-90	N/A			N/A			N/A			N/A		
	U-234	N/A			N/A			N/A			N/A		
	U-235/236	N/A			N/A			N/A			N/A		
	U-238	N/A			N/A			N/A			N/A		
	Total Radiological Risk												
	Arsenic	N/A			N/A			N/A			N/A		
	Beryllium	N/A			N/A			N/A			N/A		
	Dibenzo(a,h)anthracene	N/A			N/A			N/A			N/A		
	Total Chemical Risk												
	Total												
Homegrown Produce (Dust Affected)	NP-237	N/A			1.6E-11	0.05%	0.00%	1.1E-12	0.01%	0.00%	N/A		
	PU-238	N/A			9.5E-12	0.03%	0.00%	6.7E-13	0.01%	0.00%	N/A		
	PU-239/240	N/A			2.6E-12	0.01%	0.00%	1.8E-13	0.00%	0.00%	N/A		
	RA-226	N/A			8.4E-10	2.74%	0.14%	5.9E-11	0.61%	0.08%	N/A		
	RA-228	N/A			1.2E-10	0.39%	0.02%	8.4E-12	0.09%	0.01%	N/A		
	SR-90	N/A			5.1E-11	0.16%	0.01%	3.6E-12	0.04%	0.00%	N/A		
	TH-228	N/A			7.8E-11	0.25%	0.01%	5.5E-12	0.06%	0.01%	N/A		
	TH-230	N/A			2.0E-11	0.06%	0.00%	1.4E-12	0.01%	0.00%	N/A		
	TH-232	N/A			2.1E-10	0.70%	0.04%	1.5E-11	0.16%	0.02%	N/A		
	U-234	N/A			7.3E-11	0.24%	0.01%	5.2E-12	0.05%	0.01%	N/A		
	U-235/236	N/A			5.0E-12	0.02%	0.00%	3.5E-13	0.00%	0.00%	N/A		
	U-238	N/A			1.3E-10	0.43%	0.02%	9.3E-12	0.10%	0.01%	N/A		
	Total Radiological Risk				1.6E-09	5.08%	0.26%	1.1E-10	1.13%	0.14%			
	Arsenic	N/A			2.1E-08	69.36%	3.49%	7.0E-09	72.26%	8.93%	N/A		
	Beryllium	N/A			3.1E-09	10.11%	0.51%	1.0E-09	10.54%	1.30%	N/A		
	Dibenzo(a,h)anthracene	N/A			4.7E-09	15.44%	0.78%	1.6E-09	16.07%	1.99%	N/A		
	Total Chemical Risk				2.9E-08	94.92%	4.78%	9.6E-09	98.87%	12.22%			
	Total				3.1E-08	100.00%	5.03%	9.7E-09	100.00%	12.36%			

000277

5894

Comment No. 43

B.3.3-29
(continued)

Medium	Parameter	Groundskeeper	% Total Medium Risk	% Total Receptor Risk	Great Miami River Rec. User	% Total Medium Risk	% Total Receptor Risk	Great Miami River Resid. User	% Total Medium Risk	% Total Receptor Risk	Great Miami River Ag. User	% Total Medium Risk	% Total Receptor Risk
Surface Water	NP-237	N/A			N/A			N/A			N/A		
	PU-238	N/A			N/A			N/A			N/A		
	PU-239/240	N/A			N/A			N/A			N/A		
	RA-226	N/A			N/A			N/A			N/A		
	RA-228	N/A			N/A			N/A			N/A		
	SR-90	N/A			N/A			N/A			N/A		
	U-234	N/A			N/A			N/A			N/A		
	U-235/236	N/A			N/A			N/A			N/A		
	U-238	N/A			N/A			N/A			N/A		
	Total Radiological Risk												
	Arsenic	N/A			N/A			N/A			N/A		
	Beryllium	N/A			N/A			N/A			N/A		
	Dibenzo(a,h)anthracene	N/A			N/A			N/A			N/A		
	Total Chemical Risk												
	Total												
Surface Water (includes fish pathway for GMR users)	NP-237	N/A			1.5E-12	0.02%	0.02%	3.6E-11	1.20%	1.20%	N/A		
	PU-238	N/A			4.4E-12	0.05%	0.05%	4.3E-11	1.45%	1.45%	N/A		
	PU-239/240	N/A			3.3E-13	0.00%	0.00%	3.2E-12	0.11%	0.11%	N/A		
	RA-226	N/A			1.4E-11	0.16%	0.16%	6.8E-11	2.27%	2.27%	N/A		
	RA-228	N/A			1.8E-12	0.02%	0.02%	8.7E-12	0.29%	0.29%	N/A		
	SR-90	N/A			1.5E-13	0.00%	0.00%	1.2E-12	0.04%	0.04%	N/A		
	U-234	N/A			5.4E-12	0.06%	0.06%	6.3E-10	21.03%	21.03%	N/A		
	U-235/236	N/A			3.4E-13	0.00%	0.00%	3.9E-11	1.31%	1.31%	N/A		
	U-238	N/A			9.4E-12	0.11%	0.11%	1.1E-09	36.79%	36.79%	N/A		
	Total Radiological Risk				3.7E-11	0.44%	0.44%	1.9E-09	64.49%	64.49%			
	Arsenic	N/A			1.4E-10	1.63%	1.63%	7.6E-10	25.70%	25.70%	N/A		
	Beryllium	N/A			7.0E-12	0.08%	0.08%	1.8E-10	6.05%	6.05%	N/A		
	Dibenzo(a,h)anthracene	N/A			8.2E-09	97.85%	97.85%	1.1E-10	3.76%	3.76%	N/A		
	Total Chemical Risk				8.3E-09	99.56%	99.56%	1.1E-09	35.51%	35.51%			
	Total				8.4E-09	100.00%	100.00%	3.0E-09	100.00%	100.00%			
Homegrown Produce (Dust Affected)	NP-237	N/A			N/A			N/A			N/A		
	PU-238	N/A			N/A			N/A			N/A		
	PU-239/240	N/A			N/A			N/A			N/A		
	RA-226	N/A			N/A			N/A			N/A		
	RA-228	N/A			N/A			N/A			N/A		
	SR-90	N/A			N/A			N/A			N/A		
	TH-228	N/A			N/A			N/A			N/A		
	TH-230	N/A			N/A			N/A			N/A		
	TH-232	N/A			N/A			N/A			N/A		
	U-234	N/A			N/A			N/A			N/A		
	U-235/236	N/A			N/A			N/A			N/A		
	U-238	N/A			N/A			N/A			N/A		
	Total Radiological Risk												
	Arsenic	N/A			N/A			N/A			N/A		
	Beryllium	N/A			N/A			N/A			N/A		
	Dibenzo(a,h)anthracene	N/A			N/A			N/A			N/A		
	Total Chemical Risk												
	Total												

000278

5894

B.3.3-29
(continued)

Medium	Parameter	Trespassing Youth	% Total Medium Risk	% Total Receptor Risk	Off-Property Resident Farmer	% Total Medium Risk	% Total Receptor Risk	Off-Property Resident Child	% Total Medium Risk	% Total Receptor Risk	User of Milk and Meat	% Total Medium Risk	% Total Receptor Risk
Homegrown Produce (GMR Surface Water Affected)	NP-237	N/A			N/A			N/A			N/A		
	PU-238	N/A			N/A			N/A			N/A		
	PU-239/240	N/A			N/A			N/A			N/A		
	RA-226	N/A			N/A			N/A			N/A		
	RA-228	N/A			N/A			N/A			N/A		
	SR-90	N/A			N/A			N/A			N/A		
	U-234	N/A			N/A			N/A			N/A		
	U-235/236	N/A			N/A			N/A			N/A		
	U-238	N/A			N/A			N/A			N/A		
	Total Radiological Risk												
	Arsenic	N/A			N/A			N/A			N/A		
	Beryllium	N/A			N/A			N/A			N/A		
	Dibenzo(a,h)anthracene	N/A			N/A			N/A			N/A		
	Total Chemical Risk												
	Total												
Beef/Milk (Dust Affected)	NP-237	N/A			7.2E-14	0.00%	0.00%	5.5E-15	0.00%	0.00%	7.2E-14	0.00%	0.00%
	PU-238	N/A			5.4E-16	0.00%	0.00%	5.6E-17	0.00%	0.00%	5.4E-16	0.00%	0.00%
	PU-239/240	N/A			1.6E-16	0.00%	0.00%	1.6E-17	0.00%	0.00%	1.6E-16	0.00%	0.00%
	RA-226	N/A			1.5E-10	0.13%	0.02%	2.6E-11	0.04%	0.03%	1.5E-10	0.13%	0.13%
	RA-228	N/A			1.4E-11	0.01%	0.00%	2.4E-12	0.00%	0.00%	1.4E-11	0.01%	0.01%
	SR-90	N/A			1.6E-10	0.14%	0.03%	3.0E-11	0.05%	0.04%	1.6E-10	0.14%	0.14%
	TH-228	N/A			1.1E-13	0.00%	0.00%	1.7E-14	0.00%	0.00%	1.1E-13	0.00%	0.00%
	TH-230	N/A			1.2E-13	0.00%	0.00%	2.0E-14	0.00%	0.00%	1.2E-13	0.00%	0.00%
	TH-232	N/A			1.4E-12	0.00%	0.00%	2.2E-13	0.00%	0.00%	1.4E-12	0.00%	0.00%
	U-234	N/A			1.0E-11	0.01%	0.00%	1.9E-12	0.00%	0.00%	1.0E-11	0.01%	0.01%
	U-235/236	N/A			7.0E-13	0.00%	0.00%	1.3E-13	0.00%	0.00%	7.0E-13	0.00%	0.00%
	U-238	N/A			1.8E-11	0.02%	0.00%	3.4E-12	0.01%	0.00%	1.8E-11	0.02%	0.02%
	Total Radiological Risk				3.5E-10	0.31%	0.06%	6.4E-11	0.10%	0.08%	3.5E-10	0.31%	0.31%
	Arsenic	N/A			7.4E-09	6.48%	1.21%	1.7E-09	2.77%	2.22%	7.4E-09	6.48%	6.48%
	Beryllium	N/A			3.6E-10	0.31%	0.06%	5.6E-11	0.09%	0.07%	3.6E-10	0.31%	0.31%
	Dibenzo(a,h)anthracene	N/A			1.1E-07	92.90%	17.38%	6.1E-08	97.04%	77.67%	1.1E-07	92.90%	92.90%
	Total Chemical Risk				1.1E-07	99.69%	18.66%	6.3E-08	99.90%	79.96%	1.1E-07	99.69%	99.69%
	Total				1.1E-07	100.00%	18.71%	6.3E-08	100.00%	80.04%	1.1E-07	100.00%	100.00%
Beef/Milk (GMR Surface Water Affected)	NP-237	N/A			N/A			N/A			N/A		
	PU-238	N/A			N/A			N/A			N/A		
	PU-239/240	N/A			N/A			N/A			N/A		
	RA-226	N/A			N/A			N/A			N/A		
	RA-228	N/A			N/A			N/A			N/A		
	SR-90	N/A			N/A			N/A			N/A		
	U-234	N/A			N/A			N/A			N/A		
	U-235/236	N/A			N/A			N/A			N/A		
	U-238	N/A			N/A			N/A			N/A		
	Total Radiological Risk												
	Arsenic	N/A			N/A			N/A			N/A		
	Beryllium	N/A			N/A			N/A			N/A		
	Dibenzo(a,h)anthracene	N/A			N/A			N/A			N/A		
	Total Chemical Risk												
	Total												
Ambient Radon		6.5E-08		0.42%	2.2E-07		35.78%	4.0E-09		5.04%	N/A		
ALL MEDIA		1.5E-05			6.1E-07			7.9E-08			1.1E-07		

Comment No. 43

B.3.3-29
(continued)

Medium	Parameter	Groundskeeper	% Total Medium Risk	% Total Receptor Risk	Great Miami River Rec. User	% Total Medium Risk	% Total Receptor Risk	Great Miami River Resid. User	% Total Medium Risk	% Total Receptor Risk	Great Miami River Ag. User	% Total Medium Risk	% Total Receptor Risk
Homegrown Produce (GMR Surface Water Affected)	NP-237	N/A			N/A			N/A			1.1E-11	1.20%	0.21%
	PU-238	N/A			N/A			N/A			1.3E-11	1.42%	0.24%
	PU-239/240	N/A			N/A			N/A			9.7E-13	0.11%	0.02%
	RA-226	N/A			N/A			N/A			2.1E-11	2.32%	0.40%
	RA-228	N/A			N/A			N/A			2.6E-12	0.29%	0.05%
	SR-90	N/A			N/A			N/A			4.2E-13	0.05%	0.01%
	U-234	N/A			N/A			N/A			1.9E-10	20.69%	3.55%
	U-235/236	N/A			N/A			N/A			1.2E-11	1.29%	0.22%
	U-238	N/A			N/A			N/A			*3.3E-10*	*36.21%*	*6.21%*
	Total Radiological Risk										*5.8E-10*	*63.56%*	*10.89%*
	Arsenic	N/A			N/A			N/A			3.0E-10	32.47%	*5.57%*
	Beryllium	N/A			N/A			N/A			3.0E-11	3.24%	*0.56%*
	Dibenzo(a,h)anthracene	N/A			N/A			N/A			6.7E-12	0.74%	*0.13%*
	Total Chemical Risk										3.3E-10	36.45%	*6.25%*
	Total										*9.1E-10*	100.00%	*17.14%*
Beef/Milk (Dust Affected)	NP-237	N/A			N/A			N/A			N/A		
	PU-238	N/A			N/A			N/A			N/A		
	PU-239/240	N/A			N/A			N/A			N/A		
	RA-226	N/A			N/A			N/A			N/A		
	RA-228	N/A			N/A			N/A			N/A		
	SR-90	N/A			N/A			N/A			N/A		
	TH-228	N/A			N/A			N/A			N/A		
	TH-230	N/A			N/A			N/A			N/A		
	TH-232	N/A			N/A			N/A			N/A		
	U-234	N/A			N/A			N/A			N/A		
	U-235/236	N/A			N/A			N/A			N/A		
	U-238	N/A			N/A			N/A			N/A		
	Total Radiological Risk												
	Arsenic	N/A			N/A			N/A			N/A		
	Beryllium	N/A			N/A			N/A			N/A		
	Dibenzo(a,h)anthracene				N/A			N/A			N/A		
	Total Chemical Risk												
	Total												
Beef/Milk (GMR Surface Water Affected)	NP-237	N/A			N/A			N/A			2.4E-11	0.55%	*0.46%*
	PU-238	N/A			N/A			N/A			2.4E-13	0.01%	*0.00%*
	PU-239/240	N/A			N/A			N/A			1.8E-14	0.00%	*0.00%*
	RA-226	N/A			N/A			N/A			2.6E-10	5.83%	*4.83%*
	RA-228	N/A			N/A			N/A			2.5E-11	0.56%	*0.46%*
	SR-90	N/A			N/A			N/A			1.0E-11	0.23%	*0.19%*
	U-234	N/A			N/A			N/A			1.4E-09	31.77%	*26.33%*
	U-235/236	N/A			N/A			N/A			8.7E-11	1.97%	*1.64%*
	U-238	N/A			N/A			N/A			2.4E-09	55.60%	*46.07%*
	Total Radiological Risk										4.3E-09	96.52%	*79.98%*
	Arsenic	N/A			N/A			N/A			5.5E-11	1.24%	*1.03%*
	Beryllium	N/A			N/A			N/A			1.6E-12	0.04%	*0.03%*
	Dibenzo(a,h)anthracene	N/A			N/A			N/A			9.7E-11	2.20%	*1.82%*
	Total Chemical Risk										1.5E-10	3.48%	*2.88%*
	Total										4.4E-09	100.00%	*82.86%*
Ambient Radon		5.5E-07		1.11%	N/A			N/A			N/A		
ALL MEDIA		5.0E-05			8.4E-09			3.0E-09			*5.3E-09*		

5894

5894 3

TABLE B.3.3-31
FUTURE LAND USE
INACTIVE FLYASH PILE
SUMMARY OF TOTAL CARCINOGENIC RISK

Medium	Parameter	Expanded Trespasser User	% Total Medium Risk	% Total Receptor Risk	Off-Property Res. Farmer (Priv. Own.)	% Total Medium Risk	% Total Receptor Risk	Off-Propert Res. Farmer (Fed. Own.)	% Total Medium Risk	% Total Receptor Risk	Off-Property Res. Child (Priv. Own.)	% Total Medium Risk	% Total Receptor Risk	Off-Propert Res. Child (Fed. Own.)	% Total Medium Risk	% Total Receptor Risk	On-Property Resident Farmer (RME)	% Total Medium Risk	% Total Receptor Risk
Surface Soil/ Air	NP-237	2.7E-08	0.10%	0.09%	1.6E-10	0.247%	0.00%	1.6E-10	0.25%	0.00%	2.9E-12	0.146%	0.00%	2.9E-12	0.15%	0.00%	2.5E-09	0.24%	0.00%
	PU-238	6.3E-10	0.00%	0.00%	1.3E-10	0.20%	0.00%	1.3E-10	0.20%	0.00%	2.4E-12	0.12%	0.00%	2.4E-12	0.12%	0.00%	2.1E-09	0.20%	0.00%
	PU-239/240	1.7E-10	0.00%	0.00%	3.3E-11	0.05%	0.00%	3.3E-11	0.05%	0.00%	6.0E-13	0.03%	0.00%	6.0E-13	0.03%	0.00%	5.2E-10	0.05%	0.00%
	RA-226	5.4E-06	19.57%	17.88%	5.8E-10	0.88%	0.00%	5.8E-10	0.88%	0.00%	1.0E-11	0.52%	0.00%	1.0E-11	0.52%	0.00%	9.0E-09	0.88%	0.00%
	RA-228	2.9E-06	10.63%	9.71%	6.5E-11	0.10%	0.00%	6.5E-11	0.10%	0.00%	1.2E-12	0.06%	0.00%	1.2E-12	0.06%	0.00%	1.0E-09	0.10%	0.00%
	SR-90	1.0E-09	0.00%	0.00%	2.2E-12	0.00%	0.00%	2.2E-12	0.00%	0.00%	4.1E-14	0.00%	0.00%	4.1E-14	0.00%	0.00%	3.5E-11	0.00%	0.00%
	TH-228	6.8E-06	24.80%	22.65%	8.8E-09	13.48%	0.01%	8.8E-09	13.48%	0.01%	1.6E-10	7.95%	0.00%	1.6E-10	7.95%	0.00%	1.4E-07	13.47%	0.01%
	TH-230	2.4E-09	0.01%	0.01%	3.4E-09	5.12%	0.00%	3.4E-09	5.12%	0.00%	6.1E-11	3.02%	0.00%	6.1E-11	3.02%	0.00%	5.2E-08	5.11%	0.00%
	TH-232	8.9E-06	32.38%	29.58%	1.1E-08	16.34%	0.01%	1.1E-08	16.34%	0.01%	1.9E-10	9.64%	0.00%	1.9E-10	9.64%	0.00%	1.7E-07	16.37%	0.01%
	U-234	7.9E-09	0.03%	0.03%	9.4E-09	14.31%	0.01%	9.4E-09	14.31%	0.01%	1.7E-10	8.44%	0.00%	1.7E-10	8.44%	0.00%	1.5E-07	14.32%	0.01%
	U-235/236	6.5E-08	0.24%	0.22%	6.1E-10	0.94%	0.00%	6.1E-10	0.94%	0.00%	1.1E-11	0.55%	0.00%	1.1E-11	0.55%	0.00%	9.8E-09	0.96%	0.00%
	U-238	1.6E-07	0.57%	0.53%	1.9E-08	29.37%	0.03%	1.9E-08	29.37%	0.03%	3.5E-10	17.32%	0.01%	3.5E-10	17.32%	0.01%	3.0E-07	29.42%	0.02%
	Total Radiological Risk	2.4E-05	88.34%	80.70%	5.3E-08	81.04%	0.07%	5.3E-08	81.04%	0.07%	9.6E-10	47.80%	0.02%	9.6E-10	47.80%	0.02%	8.3E-07	81.12%	0.06%
	Arsenic	2.0E-06	7.14%	6.52%	1.2E-08	17.82%	0.02%	1.2E-08	17.82%	0.02%	9.9E-10	49.04%	0.02%	9.9E-10	49.04%	0.02%	1.8E-07	17.72%	0.01%
	Beryllium	4.7E-07	1.71%	1.56%	4.5E-10	0.68%	0.00%	4.5E-10	0.68%	0.00%	3.8E-11	1.87%	0.00%	3.8E-11	1.87%	0.00%	6.9E-09	0.68%	0.00%
	Dibenzo(a,h)anthracene	7.7E-07	2.81%	2.57%	3.1E-10	0.47%	0.00%	3.1E-10	0.47%	0.00%	2.6E-11	1.29%	0.00%	2.6E-11	1.29%	0.00%	4.9E-09	0.48%	0.00%
	Total Chemical Risk	3.2E-06	11.66%	10.65%	1.2E-08	18.96%	0.02%	1.2E-08	18.96%	0.02%	1.0E-09	52.20%	0.03%	1.0E-09	52.20%	0.03%	1.9E-07	18.88%	0.01%
	Total	2.7E-05	100.00%	91.35%	6.5E-08	100.00%	0.09%	6.5E-08	100.00%	0.09%	2.0E-09	100.00%	0.05%	2.0E-09	100.00%	0.05%	1.0E-06	100.00%	0.07%
Sediment	NP-237	4.2E-09	0.19%	0.01%	N/A			N/A			N/A			N/A			N/A		
	PU-238	7.0E-11	0.00%	0.00%	N/A			N/A			N/A			N/A			N/A		
	PU-239/240	1.9E-11	0.00%	0.00%	N/A			N/A			N/A			N/A			N/A		
	RA-226	8.5E-07	39.46%	2.84%	N/A			N/A			N/A			N/A			N/A		
	RA-228	4.6E-07	21.47%	1.54%	N/A			N/A			N/A			N/A			N/A		
	SR-90	1.2E-10	0.01%	0.00%	N/A			N/A			N/A			N/A			N/A		
	U-234	5.0E-10	0.02%	0.00%	N/A			N/A			N/A			N/A			N/A		
	U-235/236	9.3E-09	0.43%	0.03%	N/A			N/A			N/A			N/A			N/A		
	U-238	2.1E-08	0.98%	0.07%	N/A			N/A			N/A			N/A			N/A		
	Total Radiological Risk	1.4E-06	62.57%	4.50%															
	Arsenic	6.2E-07	28.88%	2.08%	N/A			N/A			N/A			N/A			N/A		
	Beryllium	7.0E-08	3.23%	0.23%	N/A			N/A			N/A			N/A			N/A		
	Dibenzo(a,h)anthracene	1.1E-07	5.32%	0.38%	N/A			N/A			N/A			N/A			N/A		
	Total Chemical Risk	8.1E-07	37.43%	2.69%															
	Total	2.2E-06	100.00%	7.20%															

Comment No. 43

000281

TABLE B.3.3-31
(continued)

Medium	Parameter	On-Property Resident Farmer (CT)	% Total Medium Risk	% Total Receptor Risk	On-Property Resident Child	% Total Medium Risk	% Total Receptor Risk	Great Miami River Rec. User	% Total Medium Risk	% Total Receptor Risk	Great Miami River Resid. User	% Total Medium Risk	% Total Receptor Risk	Great Miami River Ag. User	% Total Medium Risk	% Total Receptor Risk
Surface Soil/ Air	NP-237	1.8E-10	0.24%	0.00%	4.4E-11	0.14%	0.00%	N/A			N/A			N/A		
	PU-238	1.5E-10	0.20%	0.00%	3.7E-11	0.12%	0.00%	N/A			N/A			N/A		
	PU-239/240	3.8E-11	0.05%	0.00%	9.4E-12	0.03%	0.00%	N/A			N/A			N/A		
	RA-226	6.7E-10	0.88%	0.00%	1.6E-10	0.52%	0.00%	N/A			N/A			N/A		
	RA-228	7.4E-11	0.10%	0.00%	1.8E-11	0.06%	0.00%	N/A			N/A			N/A		
	SR-90	2.6E-12	0.00%	0.00%	6.4E-13	0.00%	0.00%	N/A			N/A			N/A		
	TH-228	1.0E-08	13.47%	0.01%	2.5E-09	7.96%	0.00%	N/A			N/A			N/A		
	TH-230	3.9E-09	5.11%	0.00%	9.4E-10	3.02%	0.00%	N/A			N/A			N/A		
	TH-232	1.2E-08	16.37%	0.01%	3.0E-09	9.67%	0.00%	N/A			N/A			N/A		
	U-234	1.1E-08	14.32%	0.01%	2.6E-09	8.47%	0.00%	N/A			N/A			N/A		
	U-235/236	7.2E-10	0.96%	0.00%	1.8E-10	0.57%	0.00%	N/A			N/A			N/A		
	U-238	2.2E-08	29.42%	0.03%	5.4E-09	17.39%	0.01%	N/A			N/A			N/A		
	Total Radiological Risk	6.1E-08	81.12%	0.07%	1.5E-08	47.94%	0.02%									
	Arsenic	1.3E-08	17.72%	0.02%	1.5E-08	48.87%	0.02%	N/A			N/A			N/A		
	Beryllium	5.1E-10	0.68%	0.00%	5.8E-10	1.87%	0.00%	N/A			N/A			N/A		
	Dibenzo(a,h)anthracene	3.6E-10	0.48%	0.00%	4.1E-10	1.31%	0.00%	N/A			N/A			N/A		
	Total Chemical Risk	1.4E-08	18.88%	0.02%	1.6E-08	52.06%	0.02%									
	Total	7.5E-08	100.00%	0.09%	3.1E-08	100.00%	0.04%									
Sediment	NP-237	N/A			N/A			N/A			N/A			N/A		
	PU-238	N/A			N/A			N/A			N/A			N/A		
	PU-239/240	N/A			N/A			N/A			N/A			N/A		
	RA-226	N/A			N/A			N/A			N/A			N/A		
	RA-228	N/A			N/A			N/A			N/A			N/A		
	SR-90	N/A			N/A			N/A			N/A			N/A		
	U-234	N/A			N/A			N/A			N/A			N/A		
	U-235/236	N/A			N/A			N/A			N/A			N/A		
	U-238	N/A			N/A			N/A			N/A			N/A		
	Total Radiological Risk															
	Arsenic	N/A			N/A			N/A			N/A			N/A		
	Beryllium	N/A			N/A			N/A			N/A			N/A		
	Dibenzo(a,h)anthracene	N/A			N/A			N/A			N/A			N/A		
	Total Chemical Risk															
	Total															

TABLE B.3.3-31
(continued)

Medium	Parameter	Expanded Trespasser User	% Total Medium Risk	% Total Receptor Risk	Off-Property Resident Farmer	% Total Medium Risk	% Total Receptor Risk	Off-Propert Res. Farmer (Fed. Own.)	% Total Medium Risk	% Total Receptor Risk	Off-Property Res. Child (Priv. Own.)	% Total Medium Risk	% Total Receptor Risk	Off-Propert Res. Child (Fed. Own.)	% Total Medium Risk	% Total Receptor Risk	On-Property Resident Farmer (RME)	% Total Medium Risk	% Total Receptor Risk
Groundwater	NP-237	N/A			3.0E-09	0.01%	0.00%	3.0E-09	0.01%	0.00%	1.3E-10	0.01%	0.00%	1.3E-10	0.01%	0.00%	2.0E-07	0.02%	0.01%
	SR-90	N/A			4.0E-09	0.01%	0.01%	4.0E-09	0.01%	0.01%	1.7E-10	0.01%	0.00%	1.7E-10	0.01%	0.00%	4.8E-08	0.00%	0.00%
	TC-99	N/A			6.2E-08	0.11%	0.08%	6.2E-08	0.11%	0.08%	2.7E-09	0.11%	0.07%	2.7E-09	0.11%	0.07%	1.2E-07	0.01%	0.01%
	U-234	N/A			1.9E-05	33.45%	24.98%	1.9E-05	33.45%	24.98%	8.1E-07	33.45%	20.19%	8.1E-07	33.45%	20.19%	3.7E-04	33.52%	25.06%
	U-235/236	N/A			1.0E-06	1.78%	1.33%	1.0E-06	1.78%	1.33%	4.3E-08	1.78%	1.08%	4.3E-08	1.78%	1.08%	2.0E-05	1.79%	1.34%
	U-238	N/A			3.6E-05	64.64%	48.26%	3.6E-05	64.64%	48.26%	1.6E-06	64.64%	39.01%	1.6E-06	64.64%	39.01%	7.1E-04	64.66%	48.33%
	Total Radiological Risk				5.6E-05	100.00%	74.66%	5.6E-05	100.00%	74.66%	2.4E-06	100.00%	60.34%	2.4E-06	100.00%	60.34%	1.1E-03	100.00%	74.75%
Surface Water	NP-237	3.2E-09	0.96%	0.01%	N/A			N/A			N/A			N/A			N/A		
	PU-238	3.9E-09	1.16%	0.01%	N/A			N/A			N/A			N/A			N/A		
	PU-239/240	2.9E-10	0.09%	0.00%	N/A			N/A			N/A			N/A			N/A		
	RA-226	6.1E-09	1.83%	0.02%	N/A			N/A			N/A			N/A			N/A		
	RA-228	7.9E-10	0.24%	0.00%	N/A			N/A			N/A			N/A			N/A		
	SR-90	1.1E-10	0.03%	0.00%	N/A			N/A			N/A			N/A			N/A		
	U-234	5.7E-08	16.97%	0.19%	N/A			N/A			N/A			N/A			N/A		
	U-235/236	3.5E-09	1.05%	0.01%	N/A			N/A			N/A			N/A			N/A		
	U-238	9.8E-08	29.16%	0.33%	N/A			N/A			N/A			N/A			N/A		
	Total Radiological Risk	1.7E-07	51.48%	0.58%															
	Arsenic	1.3E-07	38.65%	0.43%	N/A			N/A			N/A			N/A			N/A		
	Beryllium	2.7E-08	7.95%	0.09%	N/A			N/A			N/A			N/A			N/A		
	Dibenzo(a,h)anthracene	6.4E-09	1.92%	0.02%	N/A			N/A			N/A			N/A			N/A		
	Total Chemical Risk	1.6E-07	48.52%	0.54%															
	Total	3.4E-07	100.00%	1.12%															
Surface Water (includes fish pathway for GMR users)	NP-237	N/A			N/A			N/A			N/A			N/A			N/A		
	PU-238	N/A			N/A			N/A			N/A			N/A			N/A		
	PU-239/240	N/A			N/A			N/A			N/A			N/A			N/A		
	RA-226	N/A			N/A			N/A			N/A			N/A			N/A		
	RA-228	N/A			N/A			N/A			N/A			N/A			N/A		
	SR-90	N/A			N/A			N/A			N/A			N/A			N/A		
	U-234	N/A			N/A			N/A			N/A			N/A			N/A		
	U-235/236	N/A			N/A			N/A			N/A			N/A			N/A		
	U-238	N/A			N/A			N/A			N/A			N/A			N/A		
	Total Radiological Risk																		
	Arsenic	N/A			N/A			N/A			N/A			N/A			N/A		
	Beryllium	N/A			N/A			N/A			N/A			N/A			N/A		
	Dibenzo(a,h)anthracene	N/A			N/A			N/A			N/A			N/A			N/A		
	Total Chemical Risk																		
	Total																		

5894

TABLE B.3.3-31
(continued)

Medium	Parameter	On-Property Resident Farmer (CT)	% Total Medium Risk	% Total Receptor Risk	On-Property Resident Child	% Total Medium Risk	% Total Receptor Risk	Great Miami River Rec. User	% Total Medium Risk	% Total Receptor Risk	Great Miami River Resid. User	% Total Medium Risk	% Total Receptor Risk	Great Miami River Ag. User	% Total Medium Risk	% Total Receptor Risk
Groundwater	NP-237	1.2E-08	0.02%	0.01%	8.8E-09	0.02%	0.01%	N/A			N/A			N/A		
	SR-90	2.9E-09	0.00%	0.00%	2.1E-09	0.00%	0.00%	N/A			N/A			N/A		
	TC-99	7.0E-09	0.01%	0.01%	5.0E-09	0.01%	0.01%	N/A			N/A			N/A		
	U-234	2.2E-05	33.52%	25.67%	1.6E-05	33.52%	20.34%	N/A			N/A			N/A		
	U-235/236	1.2E-06	1.79%	1.37%	8.4E-07	1.79%	1.08%	N/A			N/A			N/A		
	U-238	4.3E-05	64.66%	49.53%	3.0E-05	64.66%	39.23%	N/A			N/A			N/A		
	Total Radiological Risk	6.6E-05	100.00%	76.59%	4.7E-05	100.00%	60.67%									
Surface Water	NP-237	N/A			N/A			N/A			N/A			N/A		
	PU-238	N/A			N/A			N/A			N/A			N/A		
	PU-239/240	N/A			N/A			N/A			N/A			N/A		
	RA-226	N/A			N/A			N/A			N/A			N/A		
	RA-228	N/A			N/A			N/A			N/A			N/A		
	SR-90	N/A			N/A			N/A			N/A			N/A		
	U-234	N/A			N/A			N/A			N/A			N/A		
	U-235/236	N/A			N/A			N/A			N/A			N/A		
	U-238	N/A			N/A			N/A			N/A			N/A		
	Total Radiological Risk															
	Arsenic	N/A			N/A			N/A			N/A			N/A		
	Beryllium	N/A			N/A			N/A			N/A			N/A		
	Dibenzo(a,h)anthracene	N/A			N/A			N/A			N/A			N/A		
	Total Chemical Risk															
	Total															
Surface Water (includes fish pathway for GMR users)	NP-237	N/A			N/A			1.5E-12	0.02%	0.02%	3.6E-11	1.20%	1.20%	N/A		
	PU-238	N/A			N/A			4.4E-12	0.05%	0.05%	4.3E-11	1.45%	1.45%	N/A		
	PU-239/240	N/A			N/A			3.3E-13	0.00%	0.00%	3.2E-12	0.11%	0.11%	N/A		
	RA-226	N/A			N/A			1.4E-11	0.16%	0.16%	6.8E-11	2.27%	2.27%	N/A		
	RA-228	N/A			N/A			1.8E-12	0.02%	0.02%	8.7E-12	0.29%	0.29%	N/A		
	SR-90	N/A			N/A			1.5E-13	0.00%	0.00%	1.2E-12	0.04%	0.04%	N/A		
	U-234	N/A			N/A			5.4E-12	0.06%	0.06%	6.3E-10	21.03%	21.03%	N/A		
	U-235/236	N/A			N/A			3.4E-13	0.00%	0.00%	3.9E-11	1.31%	1.31%	N/A		
	U-238	N/A			N/A			9.4E-12	0.11%	0.11%	1.1E-09	36.79%	36.79%	N/A		
	Total Radiological Risk							3.7E-11	0.44%	0.44%	1.9E-09	64.49%	64.49%			
	Arsenic	N/A			N/A			1.4E-10	1.63%	1.63%	7.6E-10	25.70%	25.70%	N/A		
	Beryllium	N/A			N/A			7.0E-12	0.08%	0.08%	1.8E-10	6.05%	6.05%	N/A		
	Dibenzo(a,h)anthracene	N/A			N/A			8.2E-09	97.85%	97.85%	1.1E-10	3.76%	3.76%	N/A		
	Total Chemical Risk							8.3E-09	99.56%	99.56%	1.1E-09	35.51%	35.51%			
	Total							8.4E-09	100.00%	100.00%	3.0E-09	100.00%	100.00%			

Comment No. 43

000284

5894

(continued)

Medium	Parameter	Expanded Trespasser User	% Total Medium Risk	% Total Receptor Risk	Off-Property Resident Farmer	% Total Medium Risk	% Total Receptor Risk	Off-Propert Res. Farmer (Fed. Own.)	% Total Medium Risk	% Total Receptor Risk	Off-Property Res. Child (Priv. Own.)	% Total Medium Risk	% Total Receptor Risk	Off-Propert Res. Child (Fed. Own.)	% Total Medium Risk	% Total Receptor Risk	On-Property Resident Farmer (RME)	% Total Medium Risk	% Total Receptor Risk
Homegrown Produce (Dust Affected)	NP-237	N/A			1.6E-11	0.05%	0.00%	1.6E-11	0.05%	0.00%	1.1E-12	0.01%	0.00%	1.1E-12	0.01%	0.00%	2.4E-10	0.05%	0.00%
	PU-238	N/A			9.5E-12	0.03%	0.00%	9.5E-12	0.03%	0.00%	6.7E-13	0.01%	0.00%	6.7E-13	0.01%	0.00%	1.5E-10	0.03%	0.00%
	PU-239/240	N/A			2.6E-12	0.01%	0.00%	2.6E-12	0.01%	0.00%	1.8E-13	0.00%	0.00%	1.8E-13	0.00%	0.00%	4.0E-11	0.01%	0.00%
	RA-226	N/A			8.4E-10	2.74%	0.00%	8.4E-10	2.74%	0.00%	5.9E-11	0.61%	0.00%	5.9E-11	0.61%	0.00%	1.3E-08	2.75%	0.00%
	RA-228	N/A			1.2E-10	0.39%	0.00%	1.2E-10	0.39%	0.00%	8.4E-12	0.09%	0.00%	8.4E-12	0.09%	0.00%	1.9E-09	0.39%	0.00%
	SR-90	N/A			5.1E-11	0.16%	0.00%	5.1E-11	0.16%	0.00%	3.6E-12	0.04%	0.00%	3.6E-12	0.04%	0.00%	7.9E-10	0.16%	0.00%
	TH-228	N/A			7.8E-11	0.25%	0.00%	7.8E-11	0.25%	0.00%	5.5E-12	0.06%	0.00%	5.5E-12	0.06%	0.00%	1.2E-09	0.25%	0.00%
	TH-230	N/A			2.0E-11	0.06%	0.00%	2.0E-11	0.06%	0.00%	1.4E-12	0.01%	0.00%	1.4E-12	0.01%	0.00%	3.0E-10	0.06%	0.00%
	TH-232	N/A			2.1E-10	0.70%	0.00%	2.1E-10	0.70%	0.00%	1.5E-11	0.16%	0.00%	1.5E-11	0.16%	0.00%	3.4E-09	0.70%	0.00%
	U-234	N/A			7.3E-11	0.24%	0.00%	7.3E-11	0.24%	0.00%	5.2E-12	0.05%	0.00%	5.2E-12	0.05%	0.00%	1.1E-09	0.24%	0.00%
	U-235/236	N/A			5.0E-12	0.02%	0.00%	5.0E-12	0.02%	0.00%	3.5E-13	0.00%	0.00%	3.5E-13	0.00%	0.00%	8.0E-11	0.02%	0.00%
	U-238	N/A			1.3E-10	0.43%	0.00%	1.3E-10	0.43%	0.00%	9.3E-12	0.10%	0.00%	9.3E-12	0.10%	0.00%	2.1E-09	0.43%	0.00%
	Total Radiological Risk				1.6E-09	5.08%	0.00%	1.6E-09	5.08%	0.00%	1.1E-10	1.13%	0.00%	1.1E-10	1.13%	0.00%	2.4E-08	5.09%	0.00%
	Arsenic	N/A			2.1E-08	69.36%	0.03%	2.1E-08	69.36%	0.03%	7.0E-09	72.26%	0.18%	7.0E-09	72.26%	0.18%	3.3E-07	69.06%	0.02%
	Beryllium	N/A			3.1E-09	10.11%	0.00%	3.1E-09	10.11%	0.00%	1.0E-09	10.54%	0.03%	1.0E-09	10.54%	0.03%	4.8E-08	10.09%	0.00%
	Dibenzo(a,h)anthracene	N/A			4.7E-09	15.44%	0.01%	4.7E-09	15.44%	0.01%	1.6E-09	16.07%	0.04%	1.6E-09	16.07%	0.04%	7.5E-08	15.76%	0.01%
	Total Chemical Risk				2.9E-08	94.92%	0.04%	2.9E-08	94.92%	0.04%	9.6E-09	98.87%	0.24%	9.6E-09	98.87%	0.24%	4.5E-07	94.91%	0.03%
	Total				3.1E-08	100.00%	0.04%	3.1E-08	100.00%	0.04%	9.7E-09	100.00%	0.24%	9.7E-09	100.00%	0.24%	4.8E-07	100.00%	0.03%
Homegrown Produce (Fruits and Vegetables, Groundwater Affected)	NP-237	N/A			9.2E-10	0.01%	0.00%	9.2E-10	0.01%	0.00%	6.5E-11	0.01%	0.00%	6.5E-11	0.01%	0.00%	6.2E-08	0.02%	0.00%
	SR-90	N/A			4.3E-09	0.03%	0.01%	4.3E-09	0.03%	0.01%	3.0E-10	0.03%	0.01%	3.0E-10	0.03%	0.01%	5.1E-08	0.02%	0.00%
	U-234	N/A			5.7E-06	33.44%	7.53%	5.7E-06	33.44%	7.53%	4.0E-07	33.44%	10.01%	4.0E-07	33.44%	10.01%	1.1E-04	33.51%	7.55%
	U-235/236	N/A			3.0E-07	1.78%	0.40%	3.0E-07	1.78%	0.40%	2.1E-08	1.78%	0.53%	2.1E-08	1.78%	0.53%	5.9E-06	1.79%	0.40%
	U-238	N/A			1.1E-05	64.62%	14.54%	1.1E-05	64.62%	14.54%	7.7E-07	64.62%	19.34%	7.7E-07	64.62%	19.34%	2.1E-04	64.65%	14.57%
	TC-99	N/A			2.0E-08	0.12%	0.03%	2.0E-08	0.12%	0.03%	1.4E-09	0.12%	0.04%	1.4E-09	0.12%	0.04%	3.7E-08	0.01%	0.00%
	Total Radiological Risk				1.7E-05	100.00%	22.51%	1.7E-05	100.00%	22.51%	1.2E-06	100.00%	29.93%	1.2E-06	100.00%	29.93%	3.3E-04	100.00%	22.53%

(continued)

Medium	Parameter	On-Property Resident Farmer (CT)	% Total Medium Risk	% Total Receptor Risk	On-Property Resident Child	% Total Medium Risk	% Total Receptor Risk	Great Miami River Rec. User	% Total Medium Risk	% Total Receptor Risk	Great Miami River Resid. User	% Total Medium Risk	% Total Receptor Risk	Great Miami River Ag. User	% Total Medium Risk	% Total Receptor Risk
Homegrown Produce (Dust Affected)	NP-237	1.3E-11	0.05%	0.00%	1.7E-11	0.01%	0.00%	N/A			N/A			N/A		
	PU-238	8.1E-12	0.03%	0.00%	1.0E-11	0.01%	0.00%	N/A			N/A			N/A		
	PU-239/240	2.2E-12	0.01%	0.00%	2.8E-12	0.00%	0.00%	N/A			N/A			N/A		
	RA-226	7.2E-10	2.75%	0.00%	9.3E-10	0.61%	0.00%	N/A			N/A			N/A		
	RA-228	1.0E-10	0.39%	0.00%	1.3E-10	0.09%	0.00%	N/A			N/A			N/A		
	SR-90	4.3E-11	0.16%	0.00%	5.6E-11	0.04%	0.00%	N/A			N/A			N/A		
	TH-228	6.7E-11	0.25%	0.00%	8.5E-11	0.06%	0.00%	N/A			N/A			N/A		
	TH-230	1.7E-11	0.06%	0.00%	2.1E-11	0.01%	0.00%	N/A			N/A			N/A		
	TH-232	1.8E-10	0.70%	0.00%	2.4E-10	0.16%	0.00%	N/A			N/A			N/A		
	U-234	6.3E-11	0.24%	0.00%	8.1E-11	0.05%	0.00%	N/A			N/A			N/A		
	U-235/236	4.4E-12	0.02%	0.00%	5.6E-12	0.00%	0.00%	N/A			N/A			N/A		
	U-238	1.1E-10	0.43%	0.00%	1.5E-10	0.10%	0.00%	N/A			N/A			N/A		
	Total Radiological Risk	1.3E-09	5.09%	0.00%	1.7E-09	1.14%	0.00%									
	Arsenic	1.8E-08	69.06%	0.02%	1.1E-07	71.95%	0.14%	N/A			N/A			N/A		
	Beryllium	2.7E-09	10.09%	0.00%	1.6E-08	10.51%	0.02%	N/A			N/A			N/A		
	Dibenzo(a,h)anthracene	4.1E-09	15.76%	0.00%	2.5E-08	16.40%	0.03%	N/A			N/A			N/A		
	Total Chemical Risk	2.5E-08	94.91%	0.03%	1.5E-07	98.86%	0.19%									
	Total	2.6E-08	100.00%	0.03%	1.5E-07	100.00%	0.20%									
Homegrown Produce (Fruits and Vegetables, Groundwater Affected)	NP-237	3.4E-09	0.02%	0.00%	4.4E-09	0.02%	0.01%	N/A			N/A			N/A		
	SR-90	2.8E-09	0.02%	0.00%	3.6E-09	0.02%	0.00%	N/A			N/A			N/A		
	U-234	6.1E-06	33.51%	7.07%	7.8E-06	33.51%	10.09%	N/A			N/A			N/A		
	U-235/236	3.2E-07	1.79%	0.38%	4.2E-07	1.79%	0.54%	N/A			N/A			N/A		
	U-238	1.2E-05	64.65%	13.63%	1.5E-05	64.65%	19.46%	N/A			N/A			N/A		
	TC-99	2.0E-09	0.01%	0.00%	2.6E-09	0.01%	0.00%	N/A			N/A			N/A		
	Total Radiological Risk	1.8E-05	100.00%	21.09%	2.3E-05	100.00%	30.09%									

TABLE B.3.3-31
(continued)

Medium	Parameter	Expanded Trespasser User	% Total Medium Risk	% Total Receptor Risk	Off-Property Resident Farmer	% Total Medium Risk	% Total Receptor Risk	Off-Propert Res. Farmer (Fed. Own.)	% Total Medium Risk	% Total Receptor Risk	Off-Property Res. Child (Priv. Own.)	% Total Medium Risk	% Total Receptor Risk	Off-Propert Res. Child (Fed. Own.)	% Total Medium Risk	% Total Receptor Risk	On-Property Resident Farmer (RME)	% Total Medium Risk	% Total Receptor Risk
Homegrown Produce (GMR Surface Water Affected)	NP-237	N/A			N/A			N/A			N/A			N/A			N/A		
	PU-238	N/A			N/A			N/A			N/A			N/A			N/A		
	PU-239/240	N/A			N/A			N/A			N/A			N/A			N/A		
	RA-226	N/A			N/A			N/A			N/A			N/A			N/A		
	RA-228	N/A			N/A			N/A			N/A			N/A			N/A		
	SR-90	N/A			N/A			N/A			N/A			N/A			N/A		
	U-234	N/A			N/A			N/A			N/A			N/A			N/A		
	U-235/236	N/A			N/A			N/A			N/A			N/A			N/A		
	U-238	N/A			N/A			N/A			N/A			N/A			N/A		
	Total Radiological Risk																		
	Arsenic	N/A			N/A			N/A			N/A			N/A			N/A		
	Beryllium	N/A			N/A			N/A			N/A			N/A			N/A		
	Dibenzo(a,h)anthracene	N/A			N/A			N/A			N/A			N/A			N/A		
	Total Chemical Risk																		
	Total																		
Beef/Milk (Dust Affected)	NP-237	N/A			7.2E-14	0.00%	0.00%	7.2E-14	0.00%	0.00%	5.5E-15	0.00%	0.00%	5.5E-15	0.00%	0.00%	1.1E-12	0.00%	0.00%
	PU-238	N/A			5.4E-16	0.00%	0.00%	5.4E-16	0.00%	0.00%	5.6E-17	0.00%	0.00%	5.6E-17	0.00%	0.00%	8.4E-15	0.00%	0.00%
	PU-239/240	N/A			1.6E-16	0.00%	0.00%	1.6E-16	0.00%	0.00%	1.6E-17	0.00%	0.00%	1.6E-17	0.00%	0.00%	2.4E-15	0.00%	0.00%
	RA-226	N/A			1.5E-10	0.13%	0.00%	1.5E-10	0.13%	0.00%	2.6E-11	0.04%	0.00%	2.6E-11	0.04%	0.00%	2.3E-09	0.13%	0.00%
	RA-228	N/A			1.4E-11	0.01%	0.00%	1.4E-11	0.01%	0.00%	2.4E-12	0.00%	0.00%	2.4E-12	0.00%	0.00%	2.2E-10	0.01%	0.00%
	SR-90	N/A			1.6E-10	0.14%	0.00%	1.6E-10	0.14%	0.00%	3.0E-11	0.05%	0.00%	3.0E-11	0.05%	0.00%	2.5E-09	0.14%	0.00%
	TH-228	N/A			1.1E-13	0.00%	0.00%	1.1E-13	0.00%	0.00%	1.7E-14	0.00%	0.00%	1.7E-14	0.00%	0.00%	1.7E-12	0.00%	0.00%
	TH-230	N/A			1.2E-13	0.00%	0.00%	1.2E-13	0.00%	0.00%	2.0E-14	0.00%	0.00%	2.0E-14	0.00%	0.00%	1.9E-12	0.00%	0.00%
	TH-232	N/A			1.4E-12	0.00%	0.00%	1.4E-12	0.00%	0.00%	2.2E-13	0.00%	0.00%	2.2E-13	0.00%	0.00%	2.1E-11	0.00%	0.00%
	U-234	N/A			1.0E-11	0.01%	0.00%	1.0E-11	0.01%	0.00%	1.9E-12	0.00%	0.00%	1.9E-12	0.00%	0.00%	1.6E-10	0.01%	0.00%
	U-235/236	N/A			7.0E-13	0.00%	0.00%	7.0E-13	0.00%	0.00%	1.3E-13	0.00%	0.00%	1.3E-13	0.00%	0.00%	1.1E-11	0.00%	0.00%
	U-238	N/A			1.8E-11	0.02%	0.00%	1.8E-11	0.02%	0.00%	3.4E-12	0.01%	0.00%	3.4E-12	0.01%	0.00%	2.9E-10	0.02%	0.00%
	Total Radiological Risk				3.5E-10	0.31%	0.00%	3.5E-10	0.31%	0.00%	6.4E-11	0.10%	0.00%	6.4E-11	0.10%	0.00%	5.5E-09	0.30%	0.00%
	Arsenic	N/A			7.4E-09	6.48%	0.01%	7.4E-09	6.48%	0.01%	1.7E-09	2.77%	0.04%	1.7E-09	2.77%	0.04%	1.1E-07	6.33%	0.01%
	Beryllium	N/A			3.6E-10	0.31%	0.00%	3.6E-10	0.31%	0.00%	5.6E-11	0.09%	0.00%	5.6E-11	0.09%	0.00%	5.5E-09	0.30%	0.00%
	Dibenzo(a,h)anthracene	N/A			1.1E-07	92.90%	0.14%	1.1E-07	92.90%	0.14%	6.1E-08	97.04%	1.53%	6.1E-08	97.04%	1.53%	1.7E-06	93.06%	0.12%
	Total Chemical Risk				1.1E-07	99.69%	0.15%	1.1E-07	99.69%	0.15%	6.3E-08	99.90%	1.57%	6.3E-08	99.90%	1.57%	1.8E-06	99.70%	0.12%
	Total				1.1E-07	100.00%	0.15%	1.1E-07	100.00%	0.15%	6.3E-08	100.00%	1.57%	6.3E-08	100.00%	1.57%	1.8E-06	100.00%	0.12%

5894

TABLE B.3.3-31
(continued)

Medium	Parameter	On-Property Resident Farmer (CT)	% Total Medium Risk	% Total Receptor Risk	On-Property Resident Child	% Total Medium Risk	% Total Receptor Risk	Great Miami River Rec. User	% Total Medium Risk	% Total Receptor Risk	Great Miami River Resid. User	% Total Medium Risk	% Total Receptor Risk	Great Miami River Ag. User	% Total Medium Risk	% Total Receptor Risk
Homegrown Produce (GMR Surface Water Affected)	NP-237	N/A			N/A			N/A			N/A			1.1E-11	1.20%	*0.21%*
	PU-238	N/A			N/A			N/A			N/A			1.3E-11	1.42%	*0.24%*
	PU-239/240	N/A			N/A			N/A			N/A			9.7E-13	0.11%	*0.02%*
	RA-226	N/A			N/A			N/A			N/A			2.1E-11	2.32%	*0.40%*
	RA-228	N/A			N/A			N/A			N/A			2.6E-12	0.29%	*0.05%*
	SR-90	N/A			N/A			N/A			N/A			4.2E-13	0.05%	*0.01%*
	U-234	N/A			N/A			N/A			N/A			1.9E-10	20.69%	*3.55%*
	U-235/236	N/A			N/A			N/A			N/A			1.2E-11	1.29%	*0.22%*
	U-238	N/A			N/A			N/A			N/A			*3.3E-10*	*36.21%*	*6.21%*
	Total Radiological Risk													*5.8E-10*	*63.56%*	*4.69%*
	Arsenic	N/A			N/A			N/A			N/A			3.0E-10	32.47%	*5.57%*
	Beryllium	N/A			N/A			N/A			N/A			3.0E-11	3.24%	*0.56%*
	Dibenzo(a,h)anthracene	N/A			N/A			N/A			N/A			6.7E-12	0.74%	*0.13%*
	Total Chemical Risk													3.3E-10	36.45%	*6.25%*
	Total													*9.1E-10*	100.00%	*10.94%*
Beef/Milk (Dust Affected)	NP-237	5.9E-14	0.00%	0.00%	8.3E-14	0.00%	0.00%	N/A			N/A			N/A		
	PU-238	4.3E-16	0.00%	0.00%	8.8E-16	0.00%	0.00%	N/A			N/A			N/A		
	PU-239/240	1.3E-16	0.00%	0.00%	2.6E-16	0.00%	0.00%	N/A			N/A			N/A		
	RA-226	1.1E-10	0.12%	0.00%	4.1E-10	0.04%	0.00%	N/A			N/A			N/A		
	RA-228	1.0E-11	0.01%	0.00%	3.8E-11	0.00%	0.00%	N/A			N/A			N/A		
	SR-90	1.1E-10	0.12%	0.00%	4.6E-10	0.05%	0.00%	N/A			N/A			N/A		
	TH-228	7.9E-14	0.00%	0.00%	2.6E-13	0.00%	0.00%	N/A			N/A			N/A		
	TH-230	9.3E-14	0.00%	0.00%	3.0E-13	0.00%	0.00%	N/A			N/A			N/A		
	TH-232	1.0E-12	0.00%	0.00%	3.4E-12	0.00%	0.00%	N/A			N/A			N/A		
	U-234	7.4E-12	0.01%	0.00%	2.9E-11	0.00%	0.00%	N/A			N/A			N/A		
	U-235/236	5.1E-13	0.00%	0.00%	2.0E-12	0.00%	0.00%	N/A			N/A			N/A		
	U-238	1.3E-11	0.01%	0.00%	5.2E-11	0.01%	0.00%	N/A			N/A			N/A		
	Total Radiological Risk	2.5E-10	0.28%	0.00%	9.9E-10	0.10%	0.00%									
	Arsenic	6.4E-09	6.97%	0.01%	2.7E-08	2.71%	0.03%	N/A			N/A			N/A		
	Beryllium	3.2E-10	0.34%	0.00%	8.7E-10	0.09%	0.00%	N/A			N/A			N/A		
	Dibenzo(a,h)anthracene	8.5E-08	92.41%	0.10%	9.7E-07	97.11%	1.25%	N/A			N/A			N/A		
	Total Chemical Risk	9.2E-08	99.72%	0.11%	1.0E-06	99.90%	1.29%									
	Total	9.2E-08	100.00%	0.11%	1.0E-06	100.00%	1.29%									

TABLE B.3.3-31
(continued)

Medium	Parameter	Expanded Trespasser User	% Total Medium Risk	% Total Receptor Risk	Off-Property Resident Farmer	% Total Medium Risk	% Total Receptor Risk	Off-Propert Res. Farmer (Fed. Own.)	% Total Medium Risk	% Total Receptor Risk	Off-Property Res. Child (Priv. Own.)	% Total Medium Risk	% Total Receptor Risk	Off-Propert Res. Child (Fed. Own.)	% Total Medium Risk	% Total Receptor Risk	On-Property Resident Farmer (RME)	% Total Medium Risk	% Total Receptor Risk
Beef/Milk (Groundwater Affected)	NP-237	N/A			2.8E-12	0.00%	0.00%	2.8E-12	0.00%	0.00%	2.2E-13	7.0E-07%	0.00%	2.2E-13	0.00%	0.00%	1.9E-10	0.00%	0.00%
	PU-238	N/A																	
	PU-239/240	N/A																	
	RA-226	N/A																	
	RA-228	N/A																	
	SR-90	N/A			7.1E-09	0.42%	0.01%	7.1E-09	0.42%	0.01%	1.3E-09	0.43%	0.03%	1.3E-09	0.43%	0.03%	8.6E-08	0.27%	0.01%
	TH-228	N/A																	
	TH-230	N/A																	
	TH-232	N/A																	
	U-234	N/A			5.5E-07	32.42%	0.73%	5.5E-07	32.42%	0.73%	1.0E-07	32.49%	2.52%	1.0E-07	32.49%	2.52%	1.1E-05	33.35%	0.74%
	U-235/236	N/A			2.9E-08	1.73%	0.04%	2.9E-08	1.73%	0.04%	5.4E-09	1.73%	0.13%	5.4E-09	1.73%	0.13%	5.8E-07	1.78%	0.04%
	U-238	N/A			1.1E-06	62.64%	1.42%	1.1E-06	62.64%	1.42%	1.9E-07	62.78%	4.87%	1.9E-07	62.78%	4.87%	2.1E-05	64.33%	1.42%
	TC-99	N/A			4.8E-08	2.80%	0.06%	4.8E-08	2.80%	0.06%	7.9E-09	2.56%	0.20%	7.9E-09	2.56%	0.20%	8.8E-08	0.27%	0.01%
	Total Radiological Risk				1.7E-06	100.00%	2.26%	1.7E-06	100.00%	2.26%	3.1E-07	100.00%	7.75%	3.1E-07	100.00%	7.75%	3.2E-05	100.00%	2.20%
Beef/Milk (GMR Surface Water Affected)	NP-237	N/A			N/A			N/A			N/A			N/A			N/A		
	PU-238	N/A			N/A			N/A			N/A			N/A			N/A		
	PU-239/240	N/A			N/A			N/A			N/A			N/A			N/A		
	RA-226	N/A			N/A			N/A			N/A			N/A			N/A		
	RA-228	N/A			N/A			N/A			N/A			N/A			N/A		
	SR-90	N/A			N/A			N/A			N/A			N/A			N/A		
	U-234	N/A			N/A			N/A			N/A			N/A			N/A		
	U-235/236	N/A			N/A			N/A			N/A			N/A			N/A		
	U-238	N/A			N/A			N/A			N/A			N/A			N/A		
	Total Radiological Risk																		
	Arsenic	N/A			N/A			N/A			N/A			N/A			N/A		
	Beryllium	N/A			N/A			N/A			N/A			N/A			N/A		
	Dibenzo(a,h)anthracene	N/A			N/A			N/A			N/A			N/A			N/A		
	Total Chemical Risk																		
	Total																		
Ambient Radon		1.0E-07		0.13%	2.2E-07		0.28%	2.2E-07		0.28%	4.0E-09		0.01%	4.0E-09		0.01%	4.2E-06		5.48%
ALL MEDIA		3.0E-05			7.5E-05			7.5E-05			4.0E-06			4.0E-06			1.5E-03		

5894

TABLE B.3.3-31
(continued)

Medium	Parameter	On-Property Resident Farmer (CT)	% Total Medium Risk	% Total Receptor Risk	On-Property Resident Child	% Total Medium Risk	% Total Receptor Risk	Great Miami River Rec. User	% Total Medium Risk	% Total Receptor Risk	Great Miami River Resid. User	% Total Medium Risk	% Total Receptor Risk	Great Miami River Ag. User	% Total Medium Risk	% Total Receptor Risk
Beef/Milk (Groundwater Affected)	NP-237	1.0E-11	0.00%	0.00%	1.5E-11	0.00%	0.00%	N/A			N/A			N/A		
	PU-238							N/A			N/A			N/A		
	PU-239/240							N/A			N/A			N/A		
	RA-226							N/A			N/A			N/A		
	RA-228							N/A			N/A			N/A		
	SR-90	3.9E-09	0.26%	0.00%	1.6E-08	0.27%	0.02%	N/A			N/A			N/A		
	TH-228							N/A			N/A			N/A		
	TH-230							N/A			N/A			N/A		
	TH-232							N/A			N/A			N/A		
	U-234	5.0E-07	33.35%	0.58%	2.0E-06	33.35%	2.54%	N/A			N/A			N/A		
	U-235/236	2.6E-08	1.78%	0.03%	1.0E-07	1.78%	0.14%	N/A			N/A			N/A		
	U-238	9.6E-07	64.33%	1.11%	3.8E-06	64.35%	4.90%	N/A			N/A			N/A		
	TC-99	4.2E-09	0.28%	0.00%	1.5E-08	0.25%	0.02%	N/A			N/A			N/A		
	Total Radiological Risk	1.5E-06	100.00%	1.73%	5.9E-06	100.00%	7.61%									
Beef/Milk (GMR Surface Water Affected)	NP-237	N/A			N/A			N/A			N/A			2.4E-11	0.55%	*0.46%*
	PU-238	N/A			N/A			N/A			N/A			2.4E-13	0.01%	*0.00%*
	PU-239/240	N/A			N/A			N/A			N/A			1.8E-14	0.00%	*0.00%*
	RA-226	N/A			N/A			N/A			N/A			2.6E-10	5.83%	*4.83%*
	RA-228	N/A			N/A			N/A			N/A			2.5E-11	0.56%	*0.46%*
	SR-90	N/A			N/A			N/A			N/A			1.0E-11	0.23%	*0.19%*
	U-234	N/A			N/A			N/A			N/A			1.4E-09	31.77%	*26.33%*
	U-235/236	N/A			N/A			N/A			N/A			8.7E-11	1.97%	*1.64%*
	U-238	N/A			N/A			N/A			N/A			2.4E-09	55.60%	*46.07%*
	Total Radiological Risk													4.3E-09	96.52%	*79.98%*
	Arsenic	N/A			N/A			N/A			N/A			5.5E-11	1.24%	*1.03%*
	Beryllium	N/A			N/A			N/A			N/A			1.6E-12	0.04%	*0.03%*
	Dibenzo(a,h)anthracene	N/A			N/A			N/A			N/A			9.7E-11	2.20%	*1.82%*
	Total Chemical Risk													1.5E-10	3.48%	*2.88%*
	Total													4.4E-09	100.00%	*82.86%*
Ambient Radon		3.1E-07		0.41%	7.7E-08		0.10%	N/A			N/A			N/A		
ALL MEDIA		8.6E-05			7.7E-05			8.4E-09			3.0E-09			*5.3E-09*		

N/A signifies that exposure of the receptor to the indicated medium is not applicable.

5894

TABLE B.3.3-32
FUTURE LAND USE
INACTIVE FLYASH PILE
SUMMARY OF TOTAL NON-CARCINOGENIC HAZARD

Medium	Parameter	Expanded Trespasser User	% Total Medium Hazard	% of Receptor Hazard	Off-Property Res. Farmer (Priv. Own.)	% Total Medium Hazard	% of Receptor Hazard	Off-Property Res. Farmer (Fed. Own.)	% Total Medium Hazard	% of Receptor Hazard	Off-Property Res. Child (Priv. Own.)	% Total Medium Hazard	% of Receptor Hazard	Off-Property Res. Child (Fed. Own.)	% Total Medium Hazard	% of Receptor Hazard	On-Property Resident Farmer (RME)	% Total Medium Hazard	% of Receptor Hazard
Surface Soil	Arsenic	5.9E-03	47.14%	*4.61%*	N/D			N/D			N/D			N/D			N/D		
	Beryllium	6.6E-03	52.86%	*5.17%*	N/D			N/D			N/D			N/D			N/D		
	Total	1.3E-02	100.00%	*9.77%*															
Sediment	Arsenic	4.3E-03	*11.00%*	*3.34%*	N/A			N/A			N/A			N/A			N/A		
	Beryllium	7.7E-03	*19.80%*	*6.02%*	N/A			N/A			N/A			N/A			N/A		
	U-TOTAL	*2.7E-02*	*69.20%*	*21.02%*	*N/A*			*N/A*			*N/A*			*N/A*			*N/A*		
	Total	*3.9E-02*	100.00%	*30.38%*															
Groundwater	Tributyl phosphate	N/A															8.6E-03	0.05%	0.04%
	U-TOTAL	N/A			9.1E-01	100.00%	76.82%	9.1E-01	100.00%	76.82%	2.1E+00	100.00%	84.37%	2.1E+00	100.00%	84.37%	1.8E+01	99.95%	82.33%
	Total				9.1E-01	100.00%	76.82%	9.1E-01	100.00%	76.82%	2.1E+00	100.00%	84.37%	2.1E+00	100.00%	84.37%	1.8E+01	100.00%	82.37%
Surface Water	Arsenic	1.4E-03	1.87%	*1.12%*	N/A			N/A			N/A			N/A			N/A		
	Beryllium	5.7E-05	0.07%	*0.04%*	N/A			N/A			N/A			N/A			N/A		
	U-TOTAL	7.5E-02	98.05%	*58.68%*	N/A			N/A			N/A			N/A			N/A		
	Total	7.7E-02	100.00%	*59.85%*															
GMR Surface Water	Arsenic	N/A			N/A			N/A			N/A			N/A			N/A		
	Beryllium	N/A			N/A			N/A			N/A			N/A			N/A		
	U-TOTAL	N/A			N/A			N/A			N/A			N/A			N/A		
	Cadmium	N/A			N/A			N/A			N/A			N/A			N/A		
	Total																		
Homegrown Produce (Dust Affected)	Arsenic	N/A			4.1E-05	99.65%	0.00%	4.1E-05	99.65%	0.00%	1.6E-04	99.65%	0.01%	1.6E-04	99.65%	0.01%	6.3E-04	99.64%	0.00%
	Beryllium	N/A			1.4E-07	0.35%	0.00%	1.4E-07	0.35%	0.00%	5.6E-07	0.35%	0.00%	5.6E-07	0.35%	0.00%	2.2E-06	0.36%	0.00%
	Total				4.1E-05	100.00%	0.00%	4.1E-05	100.00%	0.00%	1.6E-04	100.00%	0.01%	1.6E-04	100.00%	0.01%	6.3E-04	100.00%	0.00%
Homegrown Produce (Groundwater Affected)	Tributyl phosphate	N/A															1.7E-03	0.05%	0.01%
	U-TOTAL	N/A			2.6E-01	100.00%	21.89%	2.6E-01	100.00%	21.89%	2.4E-01	100.00%	9.54%	2.4E-01	100.00%	9.54%	3.3E+00	99.95%	15.34%
	Total				2.6E-01	100.00%	21.89%	2.6E-01	100.00%	21.89%	2.4E-01	100.00%	9.54%	2.4E-01	100.00%	9.54%	3.3E+00	100.00%	15.34%
Homegrown Produce (GMR Surface Water Affected)	Arsenic	N/A			N/A			N/A			N/A			N/A			N/A		
	Beryllium	N/A			N/A			N/A			N/A			N/A			N/A		
	Cadmium	N/A			N/A			N/A			N/A			N/A			N/A		
	U-TOTAL	N/A			N/A			N/A			N/A			N/A			N/A		
	Total																		

FER\CRU2RI\ABQ\IFP_COCN.XLS; 8/31/94; 5:18 PM

Comment No. 43

000291

5894

TABLE B.3.3-32
(continued)

Medium	Parameter	On-Property Resident Farmer (CT)	% Total Medium Hazard	% of Receptor Hazard	On-Property Resident Child	% Total Medium Hazard	% of Receptor Hazard	Great Miami River Rec. User	% Total Medium Hazard	% Total Receptor Hazard	Great Miami River Resid. User	% Total Medium Hazard	% Total Receptor Hazard	Great Miami River Ag. User	% Total Medium Hazard	% Total Receptor Hazard
Soil	Arsenic	N/D			N/D			N/A			N/A			N/A		
	Beryllium	N/D			N/D			N/A			N/A			N/A		
	Total															
Sediment	Arsenic	N/A			N/A			N/A			N/A			N/A		
	Beryllium	N/A			N/A			N/A			N/A			N/A		
	Total															
Groundwater	Tributyl phosphate	4.0E-03	0.05%	0.04%	2.0E-02	0.05%	0.03%	N/A			N/A			N/A		
	U-TOTAL	8.2E+00	99.95%	84.05%	4.1E+01	99.95%	62.59%	N/A			N/A			N/A		
	Total	8.3E+00	100.00%	84.09%	4.1E+01	100.00%	62.62%									
Surface Water	Arsenic	N/A			N/A			N/A			N/A			N/A		
	Beryllium	N/A			N/A			N/A			N/A			N/A		
	U-TOTAL	N/A			N/A			N/A			N/A			N/A		
	Total															
GMR Surface Water	Arsenic	N/A			N/A			6.0E-07	31.73%	31.73%	1.5E-06	34.70%	34.70%	N/A		
	Beryllium	N/A			N/A			1.0E-09	0.05%	0.05%	5.4E-09	0.13%	0.13%	N/A		
	U-TOTAL	N/A			N/A			3.0E-07	15.54%	15.54%	1.4E-06	32.58%	32.58%	N/A		
	Cadmium	N/A			N/A			1.0E-06	52.68%	52.68%	1.4E-06	32.58%	32.58%	N/A		
	Total							1.9E-06	100.00%	100.00%	4.2E-06	100.00%	100.00%			
Homegrown Produce (Dust Affected)	Arsenic	2.7E-04	99.64%	0.00%	2.4E-03	99.64%	0.00%	N/A			N/A			N/A		
	Beryllium	9.6E-07	0.36%	0.00%	8.6E-06	0.36%	0.00%	N/A			N/A			N/A		
	Total	2.7E-04	100.00%	0.00%	2.4E-03	100.00%	0.00%									
Homegrown Produce (Groundwater Affected)	Tributyl phosphate	7.2E-04	0.05%	0.01%	1.0E-02	0.05%	0.02%	N/A			N/A			N/A		
	U-TOTAL	1.4E+00	99.95%	14.10%	1.9E+01	99.95%	29.85%	N/A			N/A			N/A		
	Total	1.4E+00	100.00%	14.11%	1.9E+01	100.00%	29.86%									
Homegrown Produce (GMR Surface Water Affected)	Arsenic	N/A			N/A			N/A			N/A			5.6E-07	2.34%	1.57%
	Beryllium	N/A			N/A			N/A			N/A			1.4E-09	0.01%	0.00%
	Cadmium	N/A			N/A			N/A			N/A			1.9E-05	79.39%	53.04%
	U-TOTAL	N/A			N/A			N/A			N/A			4.4E-06	18.26%	12.19%
	Total													2.4E-05	100.00%	66.80%

Comment No. 43

292

TABLE B.3.3-32
(continued)

Medium	Parameter	Expanded Trespasser User	% Total Medium Hazard	% of Receptor Hazard	Off-Property Resident Farmer	% Total Medium Hazard	% of Receptor Hazard	Off-Property Res. Farmer (Fed. Own.)	% Total Medium Hazard	% of Receptor Hazard	Off-Property Res. Child (Priv. Own.)	% Total Medium Hazard	% of Receptor Hazard	Off-Property Res. Child (Fed. Own.)	% Total Medium Hazard	% of Receptor Hazard	On-Property Resident Farmer (RME)	% Total Medium Hazard	% of Receptor Hazard
Beef/Milk	Arsenic	N/A			1.4E-05	99.88%	0.00%	1.4E-05	99.88%	0.00%	3.9E-05	99.92%	0.00%	3.9E-05	99.92%	0.00%	2.2E-04	99.88%	0.00%
(Dust	Beryllium	N/A			1.7E-08	0.12%	0.00%	1.7E-08	0.12%	0.00%	3.0E-08	0.08%	0.00%	3.0E-08	0.08%	0.00%	2.6E-07	0.12%	0.00%
Affected)	*Total*				1.4E-05	100.00%	0.00%	1.4E-05	100.00%	0.00%	3.9E-05	100.00%	0.00%	3.9E-05	100.00%	0.00%	2.2E-04	100.00%	0.00%
Beef/Milk	Tributyl phosphate	N/A															1.0E-06	0.00%	0.00%
(Groundwater	U-TOTAL	N/A			1.5E-02	100.00%	1.28%	1.5E-02	100.00%	1.28%	1.5E-01	100.00%	6.08%	1.5E-01	100.00%	6.08%	4.9E-01	100.00%	2.28%
Affected)		N/A																	
	Total				1.5E-02	100.00%	1.28%	1.5E-02	100.00%	1.28%	1.5E-01	100.00%	6.08%	1.5E-01	100.00%	6.08%	4.9E-01	100.00%	2.28%
Beef/Milk	Arsenic	N/A			N/A			N/A			N/A			N/A			N/A		
(GMR Surface	Beryllium	N/A			N/A			N/A			N/A			N/A			N/A		
Water	Cadmium	N/A			N/A			N/A			N/A			N/A			N/A		
Affected)	U-TOTAL	N/A			N/A			N/A			N/A			N/A			N/A		
	Total																		
ALL MEDIA		*1.3E-01*			1.2E+00			1.2E+00			2.5E+00			2.5E+00			2.2E+01		

N/A signifies that exposure of the receptor to the indicated medium is not applicable.
N/D - Not determined because toxicity data are not available.

TABLE B.3.3-32
(continued)

Medium	Parameter	On-Property Resident Farmer (CT)	% Total Medium Hazard	% of Receptor Hazard	On-Property Resident Child	% Total Medium Hazard	% of Receptor Hazard	Great Miami River Rec. User	% Total Medium Hazard	% Total Receptor Hazard	Great Miami River Resid. User	% Total Medium Hazard	% Total Receptor Hazard	Great Miami River Ag. User	% Total Medium Hazard	% Total Receptor Hazard
Beef/Milk	Arsenic	9.5E-05	99.88%	0.00%	6.0E-04	99.92%	0.00%	N/A			N/A			N/A		
(Dust	Beryllium	1.1E-07	0.12%	0.00%	4.7E-07	0.08%	0.00%	N/A			N/A			N/A		
Affected)	*Total*	9.5E-05	100.00%	0.00%	6.0E-04	100.00%	0.00%									
Beef/Milk	Tributyl phosphate	4.1E-07	0.00%	0.00%	7.0E-06	0.00%	0.00%	N/A			N/A			N/A		
(Groundwater	U-TOTAL	1.8E-01	100.00%	1.80%	4.9E+00	100.00%	7.51%	N/A			N/A			N/A		
Affected)								N/A			N/A			N/A		
	Total	1.8E-01	100.00%	1.80%	4.9E+00	100.00%	7.51%									
Beef/Milk	Arsenic	N/A			N/A			N/A			N/A			1.0E-07	0.87%	0.29%
(GMR Surface	Beryllium	N/A			N/A			N/A			N/A			7.4E-11	0.00%	0.00%
Water	Cadmium	N/A			N/A			N/A			N/A			1.1E-05	93.65%	31.09%
Affected)	U-TOTAL	N/A			N/A			N/A			N/A			6.5E-07	5.48%	1.82%
	Total													1.2E-05	100.00%	33.20%
ALL MEDIA		9.8E+00			6.5E+01			1.9E-06			4.2E-06			3.6E-05		

N/A signifies that exposure of the receptor to the indicated medium is not applicable
N/D - Not determined because toxicity data are not available.

TABLE B.3.4-1

SOLID WASTE LANDFILL
EXPOSURE POINT CONCENTRATIONS FOR SCENARIOS EVALUATE

Current Land Use	Receptor	Direct Contact Medium	Route of Exposure	Exposure Point Concentration
Current Access Controls (current use of FEMP continues, DOE ownership)	Trespassing Youth	surface soil	incidental ingestion dermal contact external radiation	surface soil within subunit
		air	inhalation of particulates, volatiles, gases, and radionuclides	maximum estimated on-subunit current concentration derived from air modeling results
		surface water	incidental ingestion dermal contact	surface water within subunit
		sediment	ingestion dermal contact external radiation	sediment within subunit
	Off-Property Resident Farmer (adult and child), homegrown produce off-property, livestock grazing off-property	air	inhalation of particulates, volatiles, and gases	maximum estimated off-property current concentrations derived from air modeling concentrations
		plants (homegrown produce)	ingestion	maximum estimated off-property current concentrations derived from air modeling results
		livestock (grazing at property boundary)	ingestion of milk and beef	maximum estimated off-property current concentrations derived from air modeling results
	Groundskeeper	air	inhalation particulates, volatiles, and gases	maximum estimated on-subunit current concentration derived from air modeling
		surface soil	ingestion dermal contact external radiation	surface soil within subunit

TABLE B.3.4-1
(Continued)

Current Land Use	Receptor		Direct Contact Medium	Route of Exposure	Exposure Point Concentration
Current with Access Controls (current use of FEMP continues, DOE ownership) (continued)	Great Miami River Users	Recreational User	surface water	ingestion dermal contact	estimated concentrations in the Great Miami River
			fish	ingestion	estimated concentrations in the Great Miami River
		Agricultural User	plants (homegrown produce irrigated with water from Great Miami River)	ingestion of fruit and vegetables	estimated concentrations in the Great Miami River
			livestock (grazing on crops irrigated with water from Great Miami River)	ingestion of beef and milk	estimated concentrations in the Great Miami River
		~~Residential~~ ***Household*** User	surface water	ingestion dermal contact inhalation of particulates, volatiles, and gases	estimated concentrations in the Great Miami River
Current without Access Controls (current use of FEMP continues)	User of Meat and Milk Products		livestock grazing on-property	ingestion of milk and beef	maximum estimated on-property current concentrations derived from air modeling results

5894

TABLE B.3.4-1
(Continued)

Future Land Use	Receptor	Direct Contact Medium	Route of Exposure	Exposure Point Concentration
Federal Ownership	Future Off-Property Farmer (adult and child), homegrown produce off-property, livestock grazing off-property, groundwater off-property	air	inhalation of particulates, volatiles, and gases	maximum estimated off-property future concentrations derived from air modeling results
		plants (homegrown produce)	ingestion	maximum estimated off-property future concentrations derived from air modeling, and groundwater modeling results
		livestock (grazing at property boundary)	ingestion of milk and beef	maximum estimated off-property future concentrations derived from air modeling, and groundwater modeling results
		groundwater	ingestion dermal contact inhalation	modeled groundwater concentrations off-site at time when concentration is greatest in the Solid Waste Landfill
	Expanded Trespasser (youth)	air	inhalation particulates, volatiles, and gases	maximum estimated on-subunit airborne concentration derived from air modeling results
		surface water	incidental ingestion dermal contact	surface water within subunit
		sediment	ingestion dermal contact external radiation	sediment within subunit
		surface soil	ingestion dermal contact external radiation	surface soil within subunit

000297

5894

TABLE B.3.4-1
(Continued)

Future Land Use	Receptor		Direct Contact Medium	Route of Exposure	Exposure Point Concentration
Federal Ownership (Continued)	Great Miami River Users	Recreational User	surface water	ingestion dermal contact	estimated concentrations in the Great Miami River
			fish	ingestion	estimated concentrations in the Great Miami River
		Agricultural User	plants (homegrown produce irrigated with water from Great Miami River)	ingestion of fruits and vegetables	estimated concentrations in the Great Miami River
			livestock (grazing on crops irrigated with water from Great Miami River)	ingestion of beef and milk	estimated concentrations in the Great Miami River
		~~Residential~~ *Household* User	surface water	ingestion dermal contact inhalation of particulates, volatiles, and gases	estimated concentrations in the Great Miami River
Without Federal Ownership	*Future Off-Property Farmer (adult and child), homegrown produce off-property, livestock grazing off-property, groundwater off-property*		*air*	*inhalation of particulates, volatiles, and gases*	*maximum estimated off-property future concentrations derived from air modeling results*
			plants (homegrown produce)	*ingestion*	*maximum estimated off-property future concentrations derived from air modeling, and groundwater modeling results*
			livestock (grazing at property boundary)	*ingestion of milk and beef*	*maximum estimated off-property future concentrations derived from air modeling, and groundwater modeling results*
			groundwater	*ingestion* *dermal contact* *inhalation*	*modeled groundwater concentrations off-site at time when concentration is greatest in the Solid Waste Landfill*

5894

000298

5894

TABLE B.3.4-1
(Continued)

Future Land Use	Receptor	Direct Contact Medium	Route of Exposure	Exposure Point Concentration
Without Federal Ownership (Continued)	Future On-Property Resident Farmer (adult and child), homegrown produce on-subunit, livestock grazing on-property, groundwater on property, RME and CT estimates	air	inhalation of particulates, volatiles, gases, and indoor radon	maximum estimated on-subunit future concentrations from airborne soil modeling results and modeled radon emissions from soil radium
		plants (homegrown produce)	ingestion of fruits and vegetables	maximum estimated on-subunit future concentrations derived from deposited airborne soil air modeling and groundwater modeling results
		livestock (grazing on property)	ingestion of milk and beef	maximum estimated on-subunit future concentrations derived from deposited airborne soil air modeling and groundwater modeling results
		groundwater	incidental ingestion dermal contact inhalation	groundwater concentrations underlying Solid Waste Landfill at time when concentration is greatest
	Future On-Property Resident Farmer (adult and child), homegrown produce on-property, livestock grazing on-subunit, groundwater on property; RME and CT estimates (continued)	surface soil	incidental ingestion dermal contact external radiation	surface soil within subunit
	Future Homebuilder	waste material/subsurface soil	external radiation incidental ingestion dermal contact	subsurface soil within subunit
		air	inhalation of particulates, volatiles, and gases	air concentrations at construction site based on modeling

TABLE B.3.4-1
(Continued)

Future Land Use	Receptor	Direct Contact Medium	Route of Exposure	Exposure Point Concentration
Without Federal Ownership (Continued)	Future Perched Groundwater User homegrown produce on-subunit, livestock grazing on-subunit, groundwater on-property (Solid Waste Landfill and Lime Sludge Ponds only)	air	inhalation particulates, volatiles, gases, and indoor radon	maximum estimated on-subunit future concentrations from airborne soil modeling results and modeled radon emissions from soil radium
		plants (home grown produce)	ingestion of fruits and vegetables	maximum estimated on-subunit future concentrations derived from deposited airborne soil air modeling and groundwater modeling results
		livestock (grazing on property)	ingestion of milk and beef	maximum estimated on-subunit future concentrations derived from deposited airborne soil air modeling and groundwater modeling results
		maximum modeled perched groundwater directly underlying subunit	ingestion, dermal contact, and inhalation of volatiles released during household use	maximum modeled groundwater concentration in perched groundwater directly underlying Solid Waste Landfill
		surface soil	incidental ingestion dermal contact external radiation	surface soil within subunit

Comment No. B-56, *49*

000300

894

Miami River are presented in Table B.3.4-29(c). Total risk to this receptor was 4.2×10^{-9}. Total HI for this receptor was below 1.0.

B.3.4.4.7 Results of Modeled Indoor Air Radon Concentrations: Solid Waste Landfill

Ambient radon emission potentially associated with the Solid Waste Landfill, estimated as described in Section B.2.0, are summarized in Table B.3.4-31(a) for each receptor. Risks that would result at the Solid Waste Landfill, assuming radon emissions were equivalent to what would naturally occur if radium-226 were present at background concentrations, are presented for comparison. With the exception of the future on-property RME farmer, all subunit-specific risks are within or close to background.

Concentrations of indoor radon were estimated from Solid Waste Landfill subsurface soil radium-226 concentrations as described in Attachment B.II. The results shown in Table B.3.4-31(b) demonstrate little difference exists between potential carcinogenic risk to future residents dwelling either in a house constructed on a slab-type foundation or a house built with a basement. The future risk to the child resident of a house with slab foundation is 2.6×10^{-4}, with 3.1×10^{-4} risk to the CT resident, and 3.0×10^{-3} risk to an RME resident. The house with basement would present risks of 1.9×10^{-4} to the child, 2.3×10^{-4} to the CT resident, and 2.3×10^{-3} risks to an RME resident. Unlike the South Field indoor radon scenario, essentially no difference exists between the type of foundation constructed on the Solid Waste Landfill (see Table B.3.2.4.3-13, Attachment B.III). For comparisons, the risk to an
No. 48 RME resident exposed to the EPA action level for radon (4 pCi/L) (ASTDR 1990*f*) is presented. The risk would be 1.1×10^{-2}.

B.3.4.5 Summary for Solid Waste Landfill

NO. B-242 Tables ~~B.3.4-32~~ B.3.4-30 and ~~B.3.4-33~~ B.3.4-31 summarize risk and hazard, respectively, associated with the Solid Waste Landfill for receptors assuming current land use. Exposure of the trespassing youth and groundskeeper were the only receptors in the current scenario associated with carcinogenic risks greater than 1.0×10^{-6}. Total carcinogenic risk to the trespassing youth was 1.5×10^{-5} due primarily to radium-226, radium-228, thorium-228, and thorium-232 in soil via external radiation. ~~slightly greater than 1.0×10^{-5} due to external radiation from radium-228 and thorium-228 and to dermal contact with beryllium. HIs did not exceed 1.0 for any current receptor.~~ HI was 8.6 due to the estimated presence of total uranium in surface water.

TABLE B.3.5-1

LIME SLUDGE PONDS
EXPOSURE POINT CONCENTRATIONS FOR SCENARIOS EVALUATED

Current Land Use	Receptor	Direct Contact Medium	Route of Exposure	Exposure Point Concentration
Current Access Controls (current use of FEMP continues, DOE Ownership)	Trespassing Youth	surface soil	incidental ingestion dermal contact external radiation	surface soil within subunit
		air	inhalation of particulates, radionuclides, volatiles, and gases	maximum estimated on-subunit current concentrations derived from airborne soil air modeling results
		surface water	incidental ingestion dermal contact	not quantified; surface water data not available
		sediment	incidental ingestion dermal contact external radiation	not quantified; sediment data not available
	Off-Property Resident Farmer (adult and child), homegrown produce off-property, livestock grazing off-property	air	inhalation of particulates, volatiles, and gases	maximum estimated off-property current concentrations derived from airborne soil air modeling concentrations
		plants (homegrown produce)	ingestion of fruits and vegetables	maximum estimated off-property current concentrations derived from deposited airborne soil air modeling results
		livestock (grazing at property boundary)	ingestion of milk and beef	maximum estimated off-property current concentrations derived from deposited airborne soil air modeling results
	Groundskeeper	air	inhalation of particulates, volatiles, and gases	maximum estimated on-subunit current concentration derived from air modeling
		soil	ingestion dermal contact external radiation	surface soil within subunit

5894

TABLE B.3.5-1
(Continued)

Current Land Use	Receptor		Direct Contact Medium	Route of Exposure	Exposure Point Concentration
Current Access Controls (current use of FEMP continues, DOE Ownership) (contined)	Great Miami River Users	Recreational User	surface water	ingestion dermal contact	not quantified; Lime Sludge Ponds do not impact Great Miami River
			fish	ingestion	not quantified; Lime Sludge Ponds do not impact Great Miami River
		Agricultural User	plants (homegrown produce irrigated with water from Great Miami River)	ingestion of fruits and vegetables	not quantified; Lime Sludge Ponds do not impact Great Miami River
			livestock (grazing on crops irrigated with water from Great Miami River)	ingestion of beef and milk	not quantified; Lime Sludge Ponds do not impact Great Miami River
		~~Residential~~ ***Household*** User	surface water	ingestion dermal contact inhalation	not quantified; Lime Sludge Ponds do not impact Great Miami River
Current Without Access Controls (current use of FEMP continues)	User of Meat and Milk Products		livestock (grazing on-property)	ingestion of milk and beef	maximum estimated on-property current concentrations derived from deposited airborne soil air modeling results

TABLE B.3.5-1
(Continued)

Future Land Use	Receptor		Direct Contact Medium	Route of Exposure	Exposure Point Concentration
Federal Ownership	Future Off-Property Farmer (adult and child), homegrown produce off-property, livestock grazing off-property, groundwater off-property		air	inhalation of particulates, volatiles, and gases	maximum estimated off-property future concentrations derived from airborne soil air modeling results
			plants (homegrown produce)	ingestion of fruits and vegetables	maximum estimated off-property future concentrations derived from deposited airborne soil air modeling and groundwater modeling results
			livestock (grazing at property boundary)	ingestion of milk and beef	maximum estimated off-property future concentrations derived from deposited airborne soil air modeling and groundwater modeling results
			groundwater	ingestion dermal contact inhalation	modeled groundwater concentrations off-site at time when concentration is greatest
	Expanded Trespasser (youth)		air	inhalation of particulates, radionuclides, volatiles, and gases	maximum estimated on-subunit airborne modeling results
			surface water	incidental ingestion dermal contact	not quantified; surface water data not available
			sediment	incidental ingestion dermal contact external radiation	not quantified; sediment data not available
			soil	ingestion dermal contact external radiation	surface soil within subunit
	Great Miami River Users	Recreational User	surface water	ingestion dermal contact	not quantified; Lime Sludge Ponds do not impact Great Miami River
			fish	ingestion	not quantified; Lime Sludge Ponds do not impact Great Miami River
		Agricultural User	plants (homegrown produce irrigated with water from Great Miami River)	ingestion of fruit and vegetables	not quantified; Lime Sludge Ponds do not impact Great Miami River
			livestock (grazing on crops irrigated with water from Great Miami River)	ingestion of beef and milk	not quantified; Lime Sludge Ponds do not impact Great Miami River

TABLE B.3.5-1
(Continued)

Future Land Use	Receptor	Direct Contact Medium	Route of Exposure	Exposure Point Concentration
Federal Ownership (Continued)	Great Miami River Users (continued) ~~Residential~~ *Household* User	surface water	ingestion dermal contact inhalation of particulates, volatiles, and gases	not quantified; Lime Sludge Ponds do not impact Great Miami River
Without Federal Ownership	Future On-Property (Solid Waste Landfill) Resident Farmer (adult and child), homegrown produce on-property, livestock grazing on-property, groundwater on-property, RME and CT estimates	air	inhalation of particulates, volatiles, gases, and indoor radon	maximum estimated on-property future concentrations from airborne soil modeling results; indoor radon quantitated ~~under Solid Waste Landfill scenario~~
		plants (homegrown produce)	ingestion of fruits and vegetables	maximum estimated on-property future concentrations derived from deposited airborne soil air modeling results and groundwater modeling results
		livestock (grazing on property)	ingestion of milk and beef	maximum estimated on-property future concentrations derived from deposited airborne soil air modeling results and groundwater modeling results
		groundwater	ingestion dermal contact inhalation	modeled groundwater concentrations underlying ~~Solid Waste Landfill~~ Lime Sludge Ponds at time when concentration is greatest
		surface soil	incidental ingestion dermal contact external radiation	surface soil within Lime Sludge Ponds
	Future Homebuilder	waste material/subsurface soil	external radiation incidental ingestion dermal contact	not quantified; no building on Lime Sludge Ponds anticipated
		air	inhalation of particulates, volatiles, and gases	not quantified; no building on Lime Sludge Ponds anticipated

TABLE B.3.5-1
(Continued)

Future Land Use	Receptor	Direct Contact Medium	Route of Exposure	Exposure Point Concentration
Without Federal Ownership (Continued)	Future Perched Groundwater User homegrown produce on-property, livestock grazing on-property, groundwater on-property (Solid Waste Landfill and Lime Sludge Ponds only)	air	inhalation of particulates, volatiles, gases, and indoor radon	maximum estimated on-property future concentrations from airborne soil modeling results; indoor radon quantitated ~~under Solid Waste Landfill scenario~~
		plants (homegrown produce)	ingestion of fruits and vegetables	maximum estimated on-property future concentrations derived from deposited airborne soil air modeling results and groundwater modeling results
	Future Perched Groundwater User homegrown produce on-property, livestock grazing on-property, groundwater on-property (Solid Waste Landfill and Lime Sludge Ponds only) (Continued)	livestock (grazing on-property)	ingestion of milk and beef	maximum estimated on-property future concentrations derived from deposited airborne soil air modeling results and groundwater modeling results
		perched groundwater directly underlying subunit	incidental ingestion, dermal contact, inhalation of volatiles released during household use	maximum modeled groundwater concentration in perched groundwater underlying the Lime Sludge Ponds
		surface soil	incidental ingestion dermal contact external radiation	surface soil within subunit

B-245 presented in Table B.3.5-4 (Attachment B.III). Total risk due to all CPCs in surface soil by all routes of exposure was ~~2.8 x 10^{-5}~~ 1.1 x 10^{-5}. This was primarily due to ~~dermal contact with beryllium and Aroclor 1254, for which risks of 1.6 x 10^{-5} and 4.4 x 10^{-6} were calculated.~~ external radiation ~~due to~~ *No. 66* ~~from radium-226 (2.5 x 10^{-6}), radium-228 (1.0 x 10^{-6}) thorium-228 (3.5 x 10^{-6}), and thorium-232 (2.5 x 10^{-6}~~ ***2.4 x 10^{-6}***) ~~contributed risks of 1.4 x 10^{-6} and 4.7 x 10^{-6}, respectively.~~ Total chemical HIs calculated for a trespassing youth exposed to CPCs in soil did not exceed HI of 1.0.

B.3.5.3.2 Current Off-Property Farmers

Risks were characterized for the off-property farmer and resident child contacting CPCs via inhalation of airborne particulates and ingestion of homegrown produce on which airborne particulates were deposited; and ingestion of milk and beef from livestock grazing on off-site grasses on which airborne particulates were deposited. For all of these routes of exposure, the exposure point concentration was based on air modeling results as described in Section B.2.0, Methodology.

The risks and hazards calculated for the off-property farmer and resident child exposed to surface soil are presented in Tables B.3.5-5(a) and B.3.5-5(b), respectively (Attachment B.III). The total risk associated with CPCs in surface soil was ~~1.2 1.3 x 10^{-7}~~ 1.3 x 10^{-7} and 2.4 x 10^{-9} for the farmer and child, respectively. Total HIs were below 1.0.

Risks and hazards associated with ingestion of CPCs in beef and milk for the off-property farmer and resident child are given in Tables B.3.5-6(a) and B.3.5-6(b), respectively (Attachment B.III). Total risk for all CPCs consumed in beef and milk was ~~6.3 x 10^{-8} and 3.5 x 10^{-8}~~ 1.7 x 10^{-8} and 10 x^{-7} for the farmer and child, respectively. Total HIs for all CPCs consumed in beef and milk were well below 1.0 for both the farmer and child.

Risks and hazards associated with ingestion of CPCs in homegrown produce for the off-site farmer and resident child are given in Tables B.3.5-7(a) and B.3.5-7(b), respectively (Attachment B.III). Total risk for all CPCs consumed in homegrown produce was ~~3.9 x 10^{-8} and 1.2 x 10^{-8}~~ 6.8 x 10^{-9} and 1.9 x10^{-9} for the farmer and child, respectively. Total HIs for all CPCs consumed in homegrown produce were well below 1.0 for both the farmer and child.

000307

5894

TABLE B.3.6-12
FUTURE LAND USE
OU2 WIDE
SUMMARY OF TOTAL CARCINOGENIC RISK

Medium	Parameter	Expanded Trespasser	% Total Medium Risk	% Total Receptor Risk	Off-Property Res. Farmer (Priv. Own.)	% Total Medium Risk	% Total Receptor Risk	On-Property Resident Farmer (RME)	% Total Medium Risk	% Total Receptor Risk
Surface Soil/ Air	CS-137	3.9E-07	0.52%	0.45%	1.9E-11	0.00%	0.00%	4.2E-05	0.36%	0.12%
	NP-237	1.9E-07	0.25%	0.22%	2.1E-08	0.16%	0.02%	4.3E-06	0.04%	0.01%
	PU-238	1.7E-09	0.00%	0.00%	1.1E-08	0.08%	0.01%	3.0E-07	0.00%	0.00%
	PU-239/240	5.5E-10	0.00%	0.00%	6.3E-09	0.05%	0.01%	2.0E-07	0.00%	0.00%
	RA-226	4.5E-05	59.93%	52.38%	8.9E-06	67.55%	7.86%	7.8E-03	68.39%	23.34%
	RA-228	4.0E-06	5.25%	4.59%	1.1E-07	0.84%	0.10%	4.7E-04	4.12%	1.41%
	SR-90	1.9E-09	0.00%	0.00%	2.1E-10	0.00%	0.00%	2.6E-07	0.00%	0.00%
	TC-99	3.1E-09	0.00%	0.00%	2.3E-09	0.02%	0.00%	8.7E-07	0.01%	0.00%
	TH-228	9.1E-06	11.99%	10.48%	6.9E-07	5.22%	0.61%	1.0E-03	9.14%	3.12%
	TH-230	2.5E-08	0.03%	0.03%	7.9E-07	6.00%	0.70%	1.7E-05	0.15%	0.05%
	TH-232	1.2E-05	15.19%	13.28%	8.8E-07	6.63%	0.77%	1.4E-03	12.55%	4.28%
	U-234	1.7E-08	0.02%	0.02%	4.6E-07	3.49%	0.41%	1.0E-05	0.09%	0.03%
	U-235/236	1.1E-07	0.15%	0.13%	4.5E-08	0.34%	0.04%	9.8E-06	0.09%	0.03%
	U-238	4.1E-07	0.54%	0.47%	1.0E-06	7.66%	0.89%	3.5E-05	0.31%	0.11%
	Total Radiological Risk	7.1E-05	93.88%	82.06%	1.3E-05	98.04%	11.40%	1.1E-02	95.25%	32.51%
	Aroclor-1254	2.9E-07	0.38%	0.34%	*N/A*	*N/A*	*N/A*	6.0E-06	0.05%	0.02%
	Aroclor-1260	1.7E-07	0.23%	0.20%	*N/A*	*N/A*	*N/A*	3.5E-06	0.03%	0.01%
	Arsenic	1.3E-06	1.69%	1.48%	1.6E-07	1.22%	0.14%	3.5E-05	0.31%	0.11%
	Benzo(a)anthracene	1.0E-07	0.13%	0.12%	3.7E-09	0.03%	0.00%	2.0E-05	0.17%	0.06%
	Benzo(a)pyrene	1.7E-06	2.26%	1.97%	6.2E-08	0.47%	0.05%	3.4E-04	2.98%	1.02%
	Benzo(b)fluoranthene	1.2E-07	0.15%	0.13%	4.1E-09	0.03%	0.00%	2.2E-05	0.20%	0.07%
	Benzo(k)fluoranthene	1.3E-08	0.02%	0.01%	4.9E-10	0.00%	0.00%	2.6E-06	0.02%	0.01%
	Beryllium	3.4E-07	0.45%	0.39%	1.0E-08	0.08%	0.01%	2.0E-05	0.18%	0.06%
	Dibenzo(a,h)anthracene	4.9E-07	0.65%	0.57%	1.3E-08	0.10%	0.01%	6.9E-05	0.60%	0.21%
	Dieldrin	9.2E-10	0.00%	0.00%	1.7E-10	0.00%	0.00%	1.2E-06	0.01%	0.00%
	Indeno(1,2,3-cd)pyrene	1.1E-07	0.14%	0.13%	4.0E-09	0.03%	0.00%	2.2E-05	0.19%	0.06%
	bis(2-ethylhexyl)phthalate	1.1E-09	0.00%	0.00%	*N/A*	*N/A*	*N/A*			
	Total Chemical Risk	4.6E-06	6.12%	5.35%	2.6E-07	1.96%	0.23%	5.4E-04	4.75%	1.62%
	Total	7.6E-05	100.00%	87.40%	1.3E-05	100.00%	11.63%	1.1E-02	100.00%	34.13%

Comment No. 43

000308

Medium	Parameter	Expanded Trespasser	% Total Medium Risk	% Total Receptor Risk	Off-Property Res. Farmer (Priv. Own.)	% Total Medium Risk	% Total Receptor Risk	On-Property Resident Farmer (RME)	% Total Medium Risk	% Total Receptor Risk
Sediment	NP-237	2.7E-08	0.32%	0.03%	N/A			N/A		
	PU-238	1.4E-10	0.00%	0.00%	N/A			N/A		
	PU-239/240	4.3E-11	0.00%	0.00%	N/A			N/A		
	RA-226	7.1E-06	84.84%	8.19%	N/A			N/A		
	RA-228	6.0E-07	7.14%	0.69%	N/A			N/A		
	SR-90	1.2E-10	0.00%	0.00%	N/A			N/A		
	TC-99	1.6E-10	0.00%	0.00%	N/A			N/A		
	U-234	6.3E-10	0.01%	0.00%	N/A			N/A		
	U-235/236	1.4E-08	0.16%	0.02%	N/A			N/A		
	U-238	3.5E-08	0.42%	0.04%	N/A			N/A		
	Total Radiological Risk	7.8E-06	92.90%	8.97%						
	Aroclor-1254	2.5E-09	0.03%	0.00%	N/A			N/A		
	Aroclor-1260	1.4E-09	0.02%	0.00%	N/A			N/A		
	Arsenic	2.4E-07	2.90%	0.28%	N/A			N/A		
	Benzo(a)anthracene	7.3E-09	0.09%	0.01%	N/A			N/A		
	Benzo(a)pyrene	2.5E-07	2.98%	0.29%	N/A			N/A		
	Benzo(b)fluoranthene	8.1E-09	0.10%	0.01%	N/A			N/A		
	Beryllium	4.6E-08	0.55%	0.05%	N/A			N/A		
	Dibenzo(a,h)anthracene	3.6E-08	0.43%	0.04%	N/A			N/A		
	Dieldrin	5.5E-10	0.01%	0.00%	N/A			N/A		
	Total Chemical Risk	5.9E-07	7.10%	0.69%						
	Total	8.4E-06	100.00%	9.65%						
Groundwater	NP-237	N/A			2.2E-07	0.36%	0.19%	2.0E-07	0.02%	0.00%
	SR-90	N/A			8.8E-08	0.15%	0.08%	4.8E-08	0.00%	0.00%
	TC-99	N/A			6.2E-08	0.10%	0.06%	1.2E-07	0.01%	0.00%
	U-234	N/A			2.0E-05	33.32%	17.53%	3.7E-04	33.52%	1.10%
	U-235/236	N/A			1.1E-06	1.77%	0.93%	2.0E-05	1.79%	0.06%
	U-238	N/A			3.8E-05	64.28%	33.82%	7.1E-04	64.66%	2.13%
	Total Radiological Risk				6.0E-05	99.99%	52.60%	1.1E-03	100.00%	3.29%
	Arsenic	N/A			4.8E-09	0.01%	0.00%			
	Beryllium	N/A			1.2E-09	0.00%	0.00%			
	Total Chemical Risk				6.0E-09	0.01%	0.01%			
	Total				6.0E-05	100.00%	52.61%	1.1E-03	100.00%	3.29%

5894

Medium	Parameter	Expanded Trespasser	% Total Medium Risk	% Total Receptor Risk	Off-Property Res. Farmer (Priv. Own.)	% Total Medium Risk	% Total Receptor Risk	On-Property Resident Farmer (RME)	% Total Medium Risk	% Total Receptor Risk
Surface Water	NP-237	1.7E-08	2.75%	0.02%	N/A			N/A		
	PU-238	8.5E-10	0.14%	0.00%	N/A			N/A		
	PU-239/240	9.9E-11	0.02%	0.00%	N/A			N/A		
	RA-226	5.0E-08	8.13%	0.06%	N/A			N/A		
	RA-228	1.1E-09	0.18%	0.00%	N/A			N/A		
	SR-90	7.3E-10	0.12%	0.00%	N/A			N/A		
	TC-99	2.4E-07	38.80%	0.28%	N/A			N/A		
	U-234	2.7E-08	4.41%	0.03%	N/A			N/A		
	U-235/236	2.9E-09	0.48%	0.00%	N/A			N/A		
	U-238	6.9E-08	11.21%	0.08%	N/A			N/A		
	Total Radiological Risk	4.1E-07	66.23%	0.47%						
	Aroclor-1254	8.1E-09	1.31%	0.01%	N/A			N/A		
	Aroclor-1260	6.4E-11	0.01%	0.00%	N/A			N/A		
	Arsenic	1.6E-07	25.41%	0.18%	N/A			N/A		
	Benzo(a)anthracene	2.1E-09	0.34%	0.00%	N/A			N/A		
	Benzo(a)pyrene	7.5E-09	1.21%	0.01%	N/A			N/A		
	Benzo(b)fluoranthene	2.5E-10	0.04%	0.00%	N/A			N/A		
	Beryllium	1.5E-08	2.37%	0.02%	N/A			N/A		
	Dibenzo(a,h)anthracene	2.1E-09	0.35%	0.00%	N/A			N/A		
	Dieldrin	1.7E-08	2.73%	0.02%	N/A			N/A		
	Total Chemical Risk	2.1E-07	33.77%	0.24%						
	Total	6.2E-07	100.00%	0.71%						
Homegrown Produce (Dust Affected)	CS-137	N/A			5.1E-10	0.00%	0.00%	5.4E-07	0.04%	0.00%
	NP-237	N/A			2.1E-09	0.01%	0.00%	6.1E-07	0.04%	0.00%
	PU-238	N/A			7.7E-10	0.01%	0.00%	1.5E-09	0.00%	0.00%
	PU-239/240	N/A			4.9E-10	0.00%	0.00%	1.0E-09	0.00%	0.00%
	RA-226	N/A			1.3E-05	86.39%	11.47%	4.6E-05	3.15%	0.14%
	RA-228	N/A			2.0E-07	1.36%	0.18%	7.5E-07	0.05%	0.00%
	SR-90	N/A			1.7E-09	0.01%	0.00%	1.9E-05	1.26%	0.06%
	TC-99	N/A			4.8E-09	0.03%	0.00%	3.6E-04	24.22%	1.07%
	TH-228	N/A			6.1E-09	0.04%	0.01%	2.6E-08	0.00%	0.00%
	TH-230	N/A			4.6E-09	0.03%	0.00%	2.0E-08	0.00%	0.00%
	TH-232	N/A			1.8E-08	0.12%	0.02%	7.4E-08	0.01%	0.00%
	U-234	N/A			3.6E-09	0.02%	0.00%	7.1E-07	0.05%	0.00%
	U-235/236	N/A			3.6E-10	0.00%	0.00%	7.3E-08	0.00%	0.00%
	U-238	N/A			6.9E-09	0.05%	0.01%	1.3E-06	0.09%	0.00%
	Total Radiological Risk				1.3E-05	88.07%	11.69%	4.3E-04	28.91%	1.28%
	Aroclor-1254	N/A			3.6E-08	0.24%	0.03%	6.3E-06	0.42%	0.02%
	Aroclor-1260	N/A			9.3E-09	0.06%	0.01%	8.3E-07	0.06%	0.00%
	Arsenic	N/A			3.0E-07	1.96%	0.26%	5.5E-05	3.73%	0.16%
	Benzo(a)anthracene	N/A			6.0E-08	0.40%	0.05%	6.0E-05	4.06%	0.18%
	Benzo(a)pyrene	N/A			9.9E-07	6.56%	0.87%	5.7E-04	38.62%	1.71%
	Benzo(b)fluoranthene	N/A			6.5E-08	0.43%	0.06%	3.7E-05	2.48%	0.11%
	Benzo(k)fluoranthene	N/A			7.8E-09	0.05%	0.01%	1.7E-06	0.11%	0.00%
	Beryllium	N/A			7.0E-08	0.46%	0.06%	4.4E-06	0.30%	0.01%
	Dibenzo(a,h)anthracene	N/A			2.0E-07	1.31%	0.17%	4.3E-05	2.92%	0.13%
	Dieldrin	N/A			7.7E-09	0.05%	0.01%	2.5E-04	17.10%	0.76%
	Indeno(1,2,3-cd)pyrene	N/A			6.2E-08	0.41%	0.05%	1.9E-05	1.30%	0.06%
	Total Chemical Risk				1.8E-06	11.93%	1.58%	1.0E-03	71.09%	3.14%
	Total				1.5E-05	100.00%	13.28%	1.5E-03	100.00%	4.42%

Comment No. 43

000310

5894

Medium	Parameter	Expanded Trespasser	% Total Medium Risk	% Total Receptor Risk	Off-Property Res. Farmer (Priv. Own.)	% Total Medium Risk	% Total Receptor Risk	On-Property Resident Farmer (RME)	% Total Medium Risk	% Total Receptor Risk
Homegrown Produce (Groundwater Affected)	NP-237	N/A			6.6E-08	0.95%	0.06%	6.2E-08	0.05%	0.00%
	SR-90	N/A			3.1E-08	0.44%	0.03%	1.7E-08	0.01%	0.00%
	TC-99	N/A			1.0E-09	0.01%	0.00%	5.5E-10	0.00%	0.00%
	U-234	N/A			2.3E-07	3.36%	0.20%	4.3E-07	0.35%	0.00%
	U-235/236	N/A			6.0E-06	87.09%	5.28%	1.1E-04	91.08%	0.33%
	U-238	N/A			5.6E-07	8.10%	0.49%	1.0E-05	8.50%	0.03%
	Total Radiological Risk				6.9E-06	99.97%	6.06%	1.2E-04	100.00%	0.00%
	Arsenic	N/A			1.9E-09	0.03%	0.00%			
	Beryllium	N/A			3.9E-10	0.01%	0.00%			
	Total Chemical Risk				2.2E-09	0.03%	5.57%			
	Total				6.9E-06	100.00%	6.06%	1.2E-04	100.00%	0.36%
Beef/Milk (Dust Affected)	CS-137	N/A			2.5E-09	0.02%	0.00%	5.5E-06	0.03%	0.02%
	NP-237	N/A			9.3E-12	0.00%	0.00%	3.6E-08	0.00%	0.00%
	PU-238	N/A			4.4E-14	0.00%	0.00%	2.2E-11	0.00%	0.00%
	PU-239/240	N/A			3.0E-14	0.00%	0.00%	1.5E-11	0.00%	0.00%
	RA-226	N/A			2.3E-06	17.00%	2.03%	1.1E-04	0.59%	0.34%
	RA-228	N/A			2.4E-08	0.18%	0.02%	1.8E-06	0.01%	0.01%
	SR-90	N/A			1.4E-09	0.01%	0.00%	8.3E-05	0.43%	0.25%
	TC-99	N/A			1.7E-08	0.13%	0.02%	7.8E-03	40.71%	23.44%
	TH-228	N/A			8.3E-12	0.00%	0.00%	6.2E-09	0.00%	0.00%
	TH-230	N/A			2.9E-11	0.00%	0.00%	4.6E-09	0.00%	0.00%
	TH-232	N/A			1.1E-10	0.00%	0.00%	1.8E-08	0.00%	0.00%
	U-234	N/A			5.1E-10	0.00%	0.00%	6.1E-07	0.00%	0.00%
	U-235/236	N/A			5.1E-11	0.00%	0.00%	6.3E-08	0.00%	0.00%
	U-238	N/A			9.7E-10	0.01%	0.00%	1.2E-06	0.01%	0.00%
	Total Radiological Risk				2.4E-06	17.34%	2.07%	8.0E-03	41.78%	24.06%
	Aroclor-1254	N/A			2.4E-07	1.75%	0.21%	4.9E-05	0.25%	0.15%
	Aroclor-1260	N/A			1.2E-06	8.74%	1.04%	2.1E-04	1.10%	0.63%
	Arsenic	N/A			1.0E-07	0.76%	0.09%	7.3E-05	0.38%	0.22%
	Benzo(a)anthracene	N/A			8.8E-08	0.65%	0.08%	1.6E-04	0.85%	0.49%
	Benzo(a)pyrene	N/A			4.0E-06	29.28%	3.50%	5.4E-03	28.07%	16.16%
	Benzo(b)fluoranthene	N/A			2.7E-07	1.98%	0.24%	3.7E-04	1.91%	1.10%
	Benzo(k)fluoranthene	N/A			1.9E-07	1.39%	0.17%	1.5E-04	0.80%	0.46%
	Beryllium	N/A			8.0E-09	0.06%	0.01%	4.2E-06	0.02%	0.01%
	Dibenzo(a,h)anthracene	N/A			4.4E-06	32.53%	3.89%	4.0E-03	20.79%	11.97%
	Dieldrin	N/A			4.2E-12	0.00%	0.00%	1.5E-07	0.00%	0.00%
	Indeno(1,2,3-cd)pyrene	N/A			7.5E-07	5.52%	0.66%	7.8E-04	4.05%	2.33%
	Total Chemical Risk				1.1E-05	82.66%	9.88%	1.1E-02	58.22%	33.53%
	Total				1.4E-05	100.00%	11.95%	1.9E-02	100.00%	57.58%

Medium	Parameter	Expanded Trespasser	% Total Medium Risk	% Total Receptor Risk	Off-Property Res. Farmer (Priv. Own.)	% Total Medium Risk	% Total Receptor Risk	On-Property Resident Farmer (RME)	% Total Medium Risk	% Total Receptor Risk
Beef/Milk (Groundwater Affected)	NP-237	N/A			2.0E-10	0.03%	0.00%	1.9E-10	*0.00%*	0.00%
	SR-90	N/A			1.5E-08	2.24%	0.01%	8.2E-09	*0.07%*	0.00%
	TC-99	N/A			2.4E-09	0.36%	0.00%	1.3E-09	*0.01%*	0.00%
	U-234	N/A			2.3E-08	3.32%	0.02%	4.2E-08	*0.35%*	0.00%
	U-235/236	N/A			5.8E-07	86.00%	0.51%	1.1E-05	*91.07%*	0.03%
	U-238	N/A			5.4E-08	8.00%	0.05%	1.0E-06	*8.50%*	0.00%
	Total Radiological Risk				6.8E-07	99.95%	0.60%	1.2E-05	100.00%	0.04%
	Arsenic	N/A			3.4E-10	0.05%	0.00%	N/A		
	Beryllium	N/A			2.1E-11	0.00%	0.00%	N/A		
	Total Chemical Risk				3.6E-10	0.05%	0.00%			
	Total				6.8E-07	100.00%	0.60%	*1.2E-05*	100.00%	0.04%
Ambient Radon		1.9E-06		2.24%	4.4E-06		3.86%	6.0E-05		0.18%
ALL MEDIA		8.7E-05			1.1E-04			3.3E-02		

TABLE B.3.6-13
FUTURE LAND USE
OU2 WIDE
SUMMARY OF NONCARCINOGENIC HAZARD

Medium	Parameter	Expanded Trespasser	% of Total Medium Hazard	% of Total Receptor Hazard	Off-Property Resident Farmer	% of Total Medium Hazard	% of Total Receptor Hazard	On-Property Resident Farmer (RME)	% of Total Medium Hazard	% of Total Receptor Hazard
Surface Soil/ Air	Arsenic	3.9E-03	42.72%	3.27%	N/D			6.2E-02	78.67%	0.27%
	Beryllium	4.9E-03	53.69%	4.11%	N/D			1.5E-02	19.50%	0.07%
	Dieldrin	1.8E-06	0.02%	0.00%	N/D			1.4E-03	1.83%	0.01%
	U-Total	2.9E-04	3.26%	0.25%	N/D			N/A		
	bis(2-ethylhexyl)phthalate	2.7E-05	0.30%	0.02%	N/D			N/A		
	Total	9.0E-03	100.00%	7.66%				7.8E-02	100.00%	0.34%
Sediment	Arsenic	2.7E-03	5.07%	2.29%	N/A			N/A		
	Beryllium	5.1E-03	9.58%	4.33%	N/A			N/A		
	Dieldrin	1.0E-04	0.19%	0.08%	N/A			N/A		
	U-TOTAL	4.5E-02	85.16%	38.45%	N/A			N/A		
	Total	5.3E-02	100.00%	45.15%						
Groundwater	Arsenic	N/A			9.2E-06	0.00%	0.00%			
	Beryllium	N/A			7.1E-08	0.00%	0.00%			
	U-total	N/A			9.1E-01	100.00%	24.91%	1.7E+01	100.00%	75.19%
	Total				9.1E-01	100.00%	24.91%	1.7E+01	100.00%	75.19%
Surface Water	*Arsenic*	*1.0E-03*	1.80%	0.85%	N/A			N/A		
	Beryllium	*6.2E-05*	0.11%	0.05%	N/A			N/A		
	Dieldrin	*1.2E-04*	0.22%	0.10%	N/A			N/A		
	U-total	*5.5E-02*	97.88%	46.21%	N/A			N/A		
	Total	*5.6E-02*	100.00%	47.21%	N/A			N/A		
Homegrown Produce (Dust Affected)	Arsenic	N/A			5.6E-04	97.76%	0.02%	1.0E-01	24.95%	0.45%
	Beryllium	N/A			3.2E-06	0.56%	0.00%	2.0E-04	0.05%	0.00%
	Dieldrin	N/A			9.6E-06	1.67%	0.00%	3.2E-01	75.01%	1.36%
	Total				5.7E-04	100.00%	0.02%	4.2E-01	100.00%	1.82%
Homegrown Produce (H20 Affected)	Arsenic	N/A			3.5E-06	0.00%	0.00%			
	Beryllium	N/A			1.8E-08	0.00%	0.00%			
	U-total	N/A			2.7E+00	100.00%	75.06%	5.0E+00	100.00%	21.43%
	Total				2.7E+00	100.00%	75.06%	5.0E+00	100.00%	21.43%
Beef/Milk (Dust Affected)	Arsenic	N/A			2.0E-04	99.81%	0.01%	1.4E-01	99.73%	0.60%
	Beryllium	N/A			3.7E-07	0.19%	0.00%	1.9E-04	0.14%	0.00%
	Dieldrin	N/A			5.3E-09	0.00%	0.00%	1.9E-04	0.13%	0.00%
	Total				2.0E-04	100.00%	0.01%	1.4E-01	100.00%	0.60%
Beef/Milk (H20 Affected)	Arsenic	N/A			6.5E-07	0.44%	0.00%			
	Beryllium	N/A			9.6E-10	0.00%	0.00%			
	U-total	N/A			1.5E-04	99.56%	0.00%	2.6E-03	100.00%	0.01%
	Total				1.5E-04	100.00%	0.00%	2.6E-03	100.00%	0.01%
ALL MEDIA		1.2E-01			3.7E+00			2.3E+01		

000313

5894

Comment No. 43

TABLE B.4-3a

SOUTH FIELD
CURRENT LAND USE
SUMMARY OF COC CARCINOGENIC RISK CONTRIBUTIONS[a]
OPERABLE UNIT 2 REMEDIAL INVESTIGATION
FERNALD ENVIRONMENTAL MANAGEMENT PROJECT

Medium/	Trespassing	% Total	User of Milk	% Total	Groundskeeper	% Total	Great Miami River	% Total
Soil:								
Radium-226	4.0E-05	39.24%			1.5E-04	68.03%	N/A	
Radium-228	2.4E-06	2.38%	N/A[b]		9.0E-06	4.10%	N/A	
Thorium-228	5.3E-06	5.22%	N/A		2.2E-05	9.84%	N/A	
Thorium-232	7.3E-06	7.17%			2.7E-05	12.45%	N/A	
Benzo(a)pyrene	2.2E-06	2.19%	N/A		6.7E-06	3.05%	N/A	
Sediment:								
Radium-226	1.3E-05	13.07	N/A		N/A		-	-
Surface Water:								
Arsenic	3.7E-06	3.64%	N/A		N/A		-	-
Dieldrin	2.3E-05	23.04%	N/A		N/A		-	-
Radium-226	-	-	N/A		N/A		1.3E-06	30.40%
Technetium-99	-	-	N/A		N/A		2.0E-06	46.33%
Beef/Milk (Dust								
Benzo(a)pyrene	N/A		***1.5E-6***	***34.68%***	N/A			
Dibenzo(a,h)anthrace	N/A		1.7E-06	38.77%	N/A		-	-

[a]Off-Property Resident Farmer and Child receptors do not have any COCs associated with them, therefore, were not included in this table.

[b]No risk greater than the threshold of a x 10^{-6}.

[c]N/A signifies that exposure of the receptor to the indicated medium is not applicable.

Comment No. 43

5894

000314

TABLE B.4-3b

SOUTH FIELD
CURRENT LAND USE
SUMMARY OF COC NONCARCINOGENIC RISK CONTRIBUTIONS[a]
OPERABLE UNIT 2 REMEDIAL INVESTIGATION
FERNALD ENVIRONMENTAL MANAGEMENT PROJECT

Medium/ Parameter	Trespassing Youth	% Total Receptor Risk
Surface Water:		
U-Total	5.3E+01	99.54%

[a]Off-Property Resident Farmer and Child receptors do not have any COCs associated with them, therefore, were not included in this table.

[b]No hazard greater than the threshold level of 0.2.

[c]N/A signifies that exposure of the receptor to the indicated medium is not applicable.

TABLE B.4-4a

SOUTH FIELD
FUTURE LAND USE
SUMMARY OF COC CARCINOGENIC RISK CONTRIBUTIONS[a,b]
OPERABLE UNIT 2 REMEDIAL INVESTIGATION
FERNALD ENVIRONMENTAL MANAGEMENT PROJECT

Medium/ Parameter	Expanded Trespasser	% Total Receptor Risk	Off-Property Resident Farmer	% Total Receptor Risk	Off-Property Resident Child	% Total Receptor Risk	Great Miami River Recreational User	% Total Receptor Risk	Great Miami River Agricultural User	% Total Receptor Risk
Soil:										
Radium-226	8.3E-05	59.89%	-	-	-	-	N/A		N/A	
Radium-228	5.0E-06	3.62%	-	-	-	-	N/A		N/A	
Thorium-228	1.1E-05	7.94%	1.0E-06	0.97%	-	-	N/A		N/A	
Thorium-230	-	-	1.2E-06	1.13%	-	-	N/A		N/A	
Thorium-232	1.5E-05	10.91	1.3E-06	1.24%	-	-	N/A		N/A	
Arsenic	-	-	-	-	-	-	N/A		N/A	
Benzo(a)pyrene	3.3E-06	2.36%	-	-	-	-	N/A		N/A	
Sediment:										
Radium-226	1.3E-05	9.51%	N/A		N/A		N/A		N/A	
Groundwater:										
Uranium-234	-	-	1.9E-05	17.55%	-	-	N/A		N/A	
Uranium-235/236	-	-	1.0E-06	0.94%	-	-	N/A		N/A	
Uranium-238	-	-	3.6E-05	33.91%	1.6E-06	10.39%	N/A		N/A	
Surface Water:										
Radium-226	N/A		N/A		N/A		1.3E-06	30.40%	N/A	
Technetium-99	N/A		N/A		N/A		2.0E-06	46.33%	N/A	
Home Grown Produce (Dust Affected):										
Benzo(a)pyrene	N/A		1.5E-06	1.42%	-	-	N/A		N/A	

See footnotes at end of table

FER\CRU2\RICOMMEN\SKH\TABB4-4A\August29, 1994 9:15am

TABLE B.4-4a
(Continued)

Medium/ Parameter	Expanded Trespasser	% Total Receptor Risk	Off-Property Resident Farmer	% Total Receptor Risk	Off-Property Resident Child	% Total Receptor Risk	Great Miami River Recreational User	% Total Receptor Risk	Great Miami River Agricultural User	% Total Receptor Risk
Home Grown Produce (Groundwater Affected):										
Uranium-234	N/A		5.7E-06	5.29%	-	-	N/A		N/A	
Uranium-238	N/A		1.1E-05	10.22%	-	-	N/A		N/A	
Beef/Milk (Dust Affected):										
Aroclor-1260	N/A		1.8E-06	1.71%	1.1E-06	7.03%	N/A		N/A	
Benzo(a)pyrene	N/A		6.1E-06	5.73%	3.5E-06	23.57%	N/A		N/A	
Dibenzo(a,h)anthracene	N/A		6.8E-06	6.32%	3.9E-06	26.00%	N/A		N/A	
Indeno(1,2,3-cd)pyrene	N/A		1.2E-06	1.08%	-	-	N/A		N/A	
Beef/Milk (Groundwater Affected):										
Technetium-99	N/A		N/A	-	N/A	-	N/A		4.3E-06	97.31%
Uranium-238	N/A		1.1E-06	1.00%	-	-	N/A		-	-
Ambient Radon	1.9E-06	1.39%	4.4E-06	5.06%	-	-	N/A		N/A	

See footnotes at end of table

FER\CRU2\RICOMMEN\SKH\TABB4-4A\August29, 1994 9:15am

TABLE B.4-4a
(Continued)

Medium/ Parameter	On-Property Resident Farmer (RME)	% Total Receptor Risk	On-Property Resident Farmer (CT)	% Total Receptor Risk	On-Property Resident Child	% Total Receptor Risk	Home-Builder	% Total Receptor Risk
Soil:								
Cesium-137	***4.2E-5***	***0.12%***	***3.5E-6***	***0.17%***	***3.1E-6***	***0.03%***	-	-
Neptinium-237	***4.3E-6***	***0.01%***	-	-	-	-	-	-
Radium-226	7.8E-03	23.18%	6.5E-04	31.68%	5.9E-04	6.34%	2.6E-06	22.44%
Radium-228	4.7E-04	1.40%	3.9E-05	1.92%	3.5E-05	0.38%	-	
Thorium-228	1.0E-03	3.10%	8.7E-05	4.25%	7.7E-05	0.84%	1.6E-06	13.85%
Thorium-232	1.4E-03	4.25%	1.2E-04	5.84%	1.1E-04	1.15%	2.1E-06	18.66%
Uranium-234	***9.9E-6***	***0.03%***						
Uranium-235/236	***9.8E-6***	***0.03%***						
Uranium-238	***3.5E-6***	***0.10%***	***2.7E-6***	***0.13%***	***1.5E-6***	***0.02%***		
Arsenic	3.3E-05	0.11%	1.7E-06	0.08%	1.4E-05	0.15%	1.1E-06	9.46%
Beryllium	2.0E-05	0.06%	-	-	8.9E-06	0.10%	-	-
Chromium	1.3E-05	0.35%	-	-	1.1E-06	0.25%	-	-
Benzo(a)pyrene	3.4E-04	1.03%	1.6E-05	0.80%	1.5E-04	1.63%	-	-
Dibenzo(a,h)-anthracene	6.9E-05	0.21%	3.2E-06	0.16%	3.0E-05	0.33%	-	-
Sediment:								
Radium-226	N/A		N/A		N/A		N/A	
Groundwater:								
Uranium-234	3.7E-04	1.09%	2.2E-05	1.08%	1.6E-05	0.17%	N/A	
Uranium-235/236	2.0E-05	0.06%	1.2E-06	0.06%	-	-	N/A	
Uranium-238	7.1E-04	2.11%	4.3E-05	2.09%	3.0E-05	0.33%	N/A	
Home Grown Produce (Dust Affected):								
Radium-226	4.7E-05	0.14%	2.6E-06	0.13%	3.3E-06	0.04%	N/A	
Strontium-90	1.9E-05	0.06%	1.0E-06	0.05%	1.3E-06	0.01%	N/A	

See footnotes at end of table

FER\CRU2\RICOMMEN\SKH\TABB4-4A\August29, 1994 9:15am

000518

5894

5894

TABLE B.4-4a
(Continued)

Medium/ Parameter	On-Property Resident Farmer (RME)	% Total Receptor Risk	On-Property Resident Farmer (CT)	% Total Receptor Risk	On-Property Resident Child	% Total Receptor Risk	Home-Builder	% Total Receptor Risk
Uranium-238								
Technetium-99	3.6E-04	1.06%	2.0E-05	0.96%	2.5E-05	0.27%	N/A	
Arsenic	5.5E-05	0.16%	3.0E-06	0.15%	1.8E-05	0.20%	N/A	
Benzo(a)anthracene	6.0E-05	0.18%	3.0E-06	0.16%	2.0E-05	0.21%	N/A	
Benzo(a)pyrene	5.7E-04	1.70%	3.1E-05	1.53%	1.9E-04	2.02%	N/A	
Benzo(b)fluoranthene	3.7E-05	0.11%	2.0E-06	0.10%	1.2E-05	0.13%	N/A	
Dibenzo(a,)anthracene	4.3E-05	0.13%	2.4E-06	0.12%	1.4E-05	0.15%	N/A	
Dieldrin	2.5E-04	0.75%	1.4E-05	0.68%	8.3E-05	0.90%	N/A	
Indeno(1,2,3-cd)pyrene	1.9E-06	0.06%	1.1E-05	0.05%	6.3E-06	0.07%	N/A	
Home Grown Produce (Groundwater Affected):								
Uranium-234	1.1E-04	0.33%	6.1E-06	0.30%	7.8E-06	0.08%	N/A	
Uranium-235/236	5.9E-06	0.02%	-	-	-	-	N/A	
Uranium-238	2.1E-04	0.64%	1.2E-06	0.57%	1.5E-05	0.16%	N/A	
Beef/Milk (Dust Affected):							N/A	
Cesium-137	5.5E-06	0.02%	-	-	-	-	N/A	
Radium-226	1.1E-04	0.34%	5.3E-06	0.26%	2.0E-05	0.21%	N/A	
Radium-228	1.8E-06	0.01%	-	-	-	-	N/A	
Technetium-99	7.8E-03	23.28%	3.7E-04	18.09%	1.3E-03	14.04%	N/A	
Aroclor-1254	4.9E-05	0.14%	2.5E-06	0.12%	2.8E-05	0.30%	N/A	
Aroclor-1260	2.1E-04	0.63%	1.1E-05	0.52%	1.2E-04	1.31%	N/A	
Arsenic	7.3E-05	0.22%	4.1E-05	0.20%	1.7E-05	0.19%	N/A	
Benzo(a)anthracene	1.6E-04	0.49%	8.2E-06	0.41%	9.4E-05	*1.02%*	N/A	
Benzo(a)pyrene	5.4E-03	16.06%	2.7E-04	13.33%	3.1E-03	33.57%	N/A	
Benzo(b)-fluoranthene	3.7E-06	1.09%	1.9E-05	0.91%	***2.1E-04***	***2.28%***	N/A	
Benzo(k)-fluoranthene	1.5E-04	0.46%	7.8E-06	0.38%	***8.9E-05***	***0.96%***	N/A	
Dibenzo(a,h)-anthracene	4.0E-03	11.90%	2.04E-04	9.88%	***2.3E-03***	***24.87%***	N/A	

See footnotes at end of table

FER\CRU2\RICOMMEN\SKH\TABB4-4A\August29, 1994 9:15am

000319

5894

TABLE B.4-4a
(Continued)

Medium/ Parameter	On-Property Resident Farmer (RME)	% Total Receptor Risk	On-Property Resident Farmer (CT)	% Total Receptor Risk	On-Property Resident Child	% Total Receptor Risk	Home-Builder	% Total Receptor Risk
Indeno(1,2,3-cd)pyrene	7.8E-04	2.32%	3.9E-05	1.92%	*4.5E-04*	*4.84%*	N/A	
Beef/Milk (Groundwater Affected):								
Uranium-234	1.1E-05	0.03%	-	-	2.0E-06	0.02%	N/A	
Uranium-238	2.1E-05	0.06%	-	-	3.8E-06	0.04%	N/A	
Ambient Radon	6.0E-05	0.18%	4.4E-06	0.22%	1.1E-06	0.01%	N/A	

[a]Homebuilder, Great Miami River User (Adult), and Great Miami River User (Youth) receptors did not have any COCs associated with them, therefore, were not included within this table.
[b]Surface water pathway did not have any COCs associated with carcinogenic risk, therefore, were not included in this table.
[c]No risk greater then the threshold level of 1×10^{-6}.
[d]N/A signifies that exposure of the receptor to the indicated medium is not applicable.

Comment No. 43

TABLE B.4-4b

SOUTH FIELD
FUTURE LAND USE
SUMMARY OF COC NONCARCINOGENIC HAZARD CONTRIBUTIONS[a,b]
OPERABLE UNIT 2 REMEDIAL INVESTIGATION
FERNALD ENVIRONMENTAL MANAGEMENT PROJECT

Medium/ Parameter	Off-Property Resident Farmer	% Total Receptor Risk	Off-Property Resident Child	% Total Receptor Risk	On-Property Resident Farmer (RME)	% Total Receptor Risk	On-Property Resident Farmer (CT)	% Total Receptor Risk	On-Property Resident Child	% Total Receptor Risk	Home-builder	% Total Receptor Risk
Soil:												
Arsenic	-[c]	-	-	-	-	-	-	-	3.1E-01	0.55%	*3.9E-01*	*72.34%*
Groundwater:												
Uranium-Total	8.6E-01	76.80%	2.1E+00	67.65%	1.8E+01	75.66%	8.2E+00	77.19%	4.1E+01	65.14%	3.9E-01	72.34%
Home Grown Produce (Dust Affected):												
Dieldrin	-	-	-	-	3.2E-01	1.34%	-	-	1.2E+00	1.93%	N/A	
Home Grown Produce (Groundwater Affected):												
Uranium-Total	2.6E-01	23.11%	1.0E+00	32.21%	5.1E+00	21.53%	2.2E+00	20.24%	1.9E+01	31.02%	N/A	
Beef/Milk (Dust Affected):												
Aroclor-1254	-	-	-	-	-	-	-	-	3.8E-01	0.61%	N/A	

[a]Expanded Trespasser receptor does not have any COCs associated with them, therefore, was not included in this table.

[b]Sediment, and surface water, pathways do not have any COCs associated with the hazard and therefore, were not included in this table.

[c]No hazard greater than the threshold level of 0.2.

Comment No. 43

TABLE B.4-6a

INACTIVE FLYASH PILE
FUTURE LAND USE
SUMMARY OF COC CARCINOGENIC RISK CONTRIBUTIONS[a,b]
OPERABLE UNIT 2 REMEDIAL INVESTIGATION
FERNALD ENVIRONMENTAL MANAGEMENT PROJECT

Medium/ Parameter	Expanded Trespasser	% Total Receptor Risk	Off-Property Resident Farmer[c]	% Total Receptor Risk	Great Miami River User	% Total Receptor Risk
Soil:						
Radium-226	5.4E-06	17.88%	-	-	N/A	
Radium-228	2.9E-06	9.71%	-	-	N/A	
Thorium-228	6.8E-06	22.65%	-	-	N/A	
Thorium-232	8.9E-06	29.58%	-	-	N/A	
Arsenic	2.0E-06	6.52%	-	-	N/A	
Groundwater:						
Uranium-234	N/A[d]		1.9E-05	24.98%	N/A	
Uranium-235/236	N/A		1.0E-06	1.33%	N/A	
Uranium-238	N/A		3.6E-05	48.26%	N/A	
Homegrown Produce (Groundwater Affected)					N/A	
Uranium-234	N/A		5.7E-06	7.53%	N/A	
Uranium-238	N/A		1.1E-05	14.54%	N/A	
Beef/Milk (Dust Affected)						
Dibenzo(a,h)anthracene	N/A				N/A	
Beef/Milk (Groundwater Affected):						
Uranium-234	N/A		-	-	N/A	
Uranium-238	N/A		1.1E-06	1.42%	N/A	
Ambient Radon:	-	-	-	-	N/A	

See footnotes at end of table

FER\CRU2\RICOMMEN\SKH\TABB4-6A\August29, 1994 12:36pm

TABLE B.4-6a
(Continued)

Medium/ Parameter	Off-Property Resident Child[f]	% Total Receptor Risk	On-Property Resident Farmer (RME)	% Total Receptor Risk	On-Property Resident Farmer (CT)	% Total Receptor Risk	On-Property Resident Child	% Total Receptor Risk
Soil:								
Radium-226	-	-	-	-	-	-	-	-
Radium-228	-	-	-	-	-	-	-	-
Thorium-228	-	-	-	-	-	-	-	-
Thorium-232	-	-	-	-	-	-	-	-
Arsenic	-	-	-	-	-	-	-	-
Groundwater:								
Uranium-234	-	-	3.7E-04	25.06%	2.2E-05	25.67%	1.6E-05	20.34%
Uranium-235/236	-	-	2.0E-05	1.34%	1.2E-06	1.37%	-	-
Uranium-238	1.6E-06	39.01%	7.1E-04	48.33%	4.3E-05	49.53%	3.0E-05	39.23%
Homegrown Produce (Groundwater Affected)								
Uranium-234	N/A		1.1E-04	7.55%	6.1E-06	7.07%	7.8E-06	10.09%
Uranium-235/236								
Uranium-238	N/A		2.1E-04	14.57%	1.2E-05	13.63%	1.5E-05	19.46%
Beef/Milk (Dust Affected):								
Dibenzo(a,h)anthracene	-	-	*1.7E-6*	*0.12%*	-	-	1.06E-06	1.29%
Beef/Milk (Groundwater Affected):								
Uranium-234	-	-	1.1E-05	0.74%	-	-	2.0E-06	2.54%
Uranium-238	-	-	2.1E-05	1.42%	-	-	3.8E-06	4.90%
Ambient Radon	-	-	4.2E-06	5.48%	-	-	-	-

[a]Sediment, surface water, home grown produce (dust and groundwater affected), and beef/milk (dust affected) pathways do not have any COCs associated with them, therefore, were not included in this table.
[b]Great Miami River User (Adult) and Great Miami River (Youth) receptors did not have any COCs associated with them, therefore, were not included in this table.
[c]No risk greater than the threshold level of 1×10^{-6}.
[d]N/A signifies that exposure of the receptor to the indicated medium is not applicable.
[e]The Off-Propery farmer under both federal and private ownership has the same risk.
[f]The Off-Property child under both federal and private ownership has the same risk.

Comment No. 43

TABLE B.4-7b

SOLID WASTE LANDFILL
CURRENT LAND USE
SUMMARY OF COC NONCARCINOGENIC RISK CONTRIBUTIONS[a,b]
OPERABLE UNIT 2 REMEDIAL INVESTIGATION
FERNALD ENVIRONMENTAL MANAGEMENT PROJECT

Medium/ Parameter	Trespassing Youth	% Total Receptor Risk
Soil:		
Uranium-Total	8.2E+00	96.33%
Sediment:		
Uranium-Total	2.6E-01	3.00%

[a]Off-Property Resident Farmer and Child, and User of Milk and Meat receptors do not have any COCs associated with them, therefore, were not included in this table.

[b]Soil, surface water, home grown produce (dust and surface water affected), and beef/milk (dust and surface water affected) pathways do not have any COCs associated with them, therefore, were not included in this table.

000324

5894

5894

TABLE B.4-8a
SOLID WASTE LANDFILL FUTURE LAND USE
SUMMARY OF COC CARCINOGENIC RISK CONTRIBUTIONS[a,b]
OPERABLE UNIT 2 REMEDIAL INVESTIGATION
FERNALD ENVIRONMENTAL MANAGEMENT PROJECT

Medium/ Parameter	Expanded Trespasser	% Total Receptor Risk	On-Property Resident Farmer (RME)	% Total Receptor Risk	On-Property Resident Farmer (CT)	% Total Receptor Risk	Great Miami River User	% Total Receptor Risk
Soil:								
Neptunium-237	-	-	2.3E-05	0.082%	1.9E-06	0.95%	N/A	
Plutonium-238	-	-	*1.1E-06*	*0.04%*	-	-	N/A	
Radium-226	3.8E-06	18.96%	3.5E-04	12.91%	2.9E-05	15.03%	N/A	
Radium-228	2.2E-06	10.92%	2.0E-04	7.41%	1.7E-05	8.66%	N/A	
Thorium-228	*4.1E-06*	20.43%	3.8E-04	13.89%	3.2E-05	16.40%	*N/A*	
Thorium-230	-	-	*2.4E-6*	*0.09%*	-	-	N/A	
Thorium-232	5.8E-06	28.74%	5.4E-04	19.33%	4.5E-05	22.86%	N/A	
Uranium-234	-	-	1.5E-05	0.53%	*1.0E-6*	*0.57%*	N/A	
Uranium-235/236	-	-	2.9E-05	1.05%	2.4E-06	1.24%	N/A	
Uranium-238	1.4E-06	6.76%	1.7E-04	6.03%	1.3E-05	6.76%	N/A	
Arsenic	-	-	3.0E-05	1.09%	*1.9E-6*	*0.73%*	N/A	
Benzo(a)anthracene	-	-	*1.3E-6*	*0.05%*	-	-	N/A	
Beryllium	-	-	*1.5E-5*	*0.53%*	-	-	N/A	
Benzo(b)-fluoranthene	-	-	*2.6E-6*	*0.09%*	-	-	N/A	
Dibenzo(a,h)-anthracene	-	-	*7.2E-6*	*0.26%*	-	-	N/A	
Indeno(1,2,3-cd)pyrene	-	-	*1.7E-6*	*0.06%*	-	-	N/A	
Perched Groundwater:								
Technetium-99	N/A		N/A		N/A		N/A	
Carbazole	N/A		N/A		N/A		N/A	

See footnotes at end of table

FER\CRU2\RICOMMEN\SKH\TABB4-8A\August29, 1994 2:21pm

TABLE B.4-8a
(Continued)

Medium/ Parameter	Expanded Trespasser	% Total Receptor Risk	On-Property Resident Farmer (RME)	% Total Receptor Risk	On-Property Resident Farmer (CT)	% Total Receptor Risk	Great Miami River User	% Total Receptor Risk
Home Grown Produce (Dust Affected):								
Neptunium-237	N/A		3.4E-06	0.12%	-	-	N/A	
Radium-226	N/A		2.1E-06	0.08%	-	-	N/A	
Strontium-90	N/A		1.1E-05	0.40%	-	-	N/A	
Uranium-234	N/A		3.5E-06	0.13%	-	-	N/A	
Uranium-238	N/A		1.1E-05	0.40%	-	-	N/A	
Arsenic	N/A		5.1E-06	1.82%	2.8E-06	1.42%	N/A	
Benzo(a)anthracene	N/A		4.0E-06	0.14%	-	-	N/A	
Benzo(a)pyrene	N/A		2.1E-05	0.74%	1.1E-06	0.58%	N/A	
Benzo(b)fluoranthene	N/A		4.2E-06	0.15%	-	-	N/A	
Beryllium	N/A		3.3E-06	0.12%	-	-	N/A	
Dibenzo(a,h)anthracene	N/A		4.5E-06	0.17%	-	-	N/A	
Indeno(1,2,3-cd)pyrene	N/A		1.5E-06	0.06%	-	-	N/A	
Beef/Milk (Dust Affected):								
Radium-226	N/A		-	-	-	-	N/A	
Strontium-90	N/A		5.0E-05	1.80%	2.3E-06	1.16%	N/A	
Uranium-234	N/A		-	-	-	-	N/A	
Uranium-238	N/A		9.6E-06	0.34%	-	-	N/A	
Arsenic	N/A		6.7E-05	2.42%	3.8E-06	1.94%	N/A	
Benzo(a)anthracene	N/A		1.1E-05	0.39%	-	-	N/A	
Benzo(a)pyrene	N/A		2.0E-04	7.04%	9.9E-06	5.03%	N/A	
Benzo(b)fluoranthene	N/A		4.2E-05	1.51%	2.1E-06	1.08%	N/A	
Beryllium	N/A		-	-	-	-	N/A	
Dibenzo(a,h)anthracene	N/A		4.2E-04	15.17%	2.1E-05	10.85%	N/A	
Indeno(1,2,3-cd)pyrene	N/A		6.2E-05	2.24%	3.1E-06	1.61%	N/A	
Ambient Radon	-	-	1.4E-06	0.05%	-	-	N/A	

See footnotes at end of table

FER\CRU2\RICOMMEN\SKH\TABB4-8A\August29, 1994 2:21pm

000326

894

5894

TABLE B.4-8a
(Continued)

Medium/ Parameter	On-Property Resident Child	% Total Receptor Risk	Home-builder	% Total Receptor Risk	Perched Groundwater user	% Total Receptor Risk	Perched Groundwater Child	% Total Receptor Risk
Soil:								
Neptunium-237	1.7E-06	0.27%	-	-	2.3E-05	0.083%	N/A	
Plutonium-238	-	-	-	-	*1.1E-6*	*0.04%*	N/A	
Radium-226	2.7E-05	4.18%	-	-	3.5E-04	12.73%	N/A	
Radium-228	1.5E-05	2.39%	-	-	*2.0E-04*	7.30%	N/A	
Thorium-228	2.9E-05	4.48%	1.1E-06	12.25%	3.8E-04	13.70%	N/A	
Thorium-230	-	-	-	-	-	-	N/A	
Thorium-232	4.0E-05	6.30%	1.8E-06	19.83%	5.4E-04	19.28%	N/A	
Uranium-234	-	-	-	-	*1.5E-5*	*0.52%*	N/A	
Uranium-235/236	2.2E-06	*0.34%*	-	-	2.9E-05	1.05%	N/A	
Uranium-238	1.0E-05	1.62%	-	-	1.7E-04	6.02%	N/A	
Arsenic	1.3E-05	2.04%	-	-	3.0E-05	1.09	N/A	
Benzo(a)anthracene	-	-	-	-	*1.3E-6*	*0.05%*	N/A	
Benzo(b)-fluoranthene	*1.1E-6*	*0.18%*	-	-	*2.6E-6*	*0.09%*	N/A	
Beryllium	6.6E-06	1.03%	-	-	*1.5E-5*	*0.53%*	N/A	
Benzo(a)pyrene	5.4E-06	0.86%	2.7E-06	30.05%	*1.2E-5*	*0.44%*	N/A	
Dibenzo(a,h)-anthracene	3.2E-06	0.50%	-	-	*9.2E-6*	*0.26%*	N/A	
Indeno(1,2,3-cd)pyrene	-	-	-	-	*1.7E-6*	*0.06%*	N/A	
Perched Groundwater:								
Technetium-99	N/A		N/A		1.8E-06	0.07%	N/A	
Carbazole	N/A		N/A		5.3E-03	0.19%	N/A	
Home Grown Produce (Dust Affected):								
Neptunium-237	-	-	N/A		3.4E-06	0.12%	N/A	
Radium-226	-	-	N/A		2.1E-06	0.08%	N/A	
Strontium-90	-	-	N/A		1.1E-05	0.40%	N/A	
Uranium-234	-	-	N/A		3.5E-06	0.13%	N/A	
Uranium-238	-	-	N/A		1.1E-05	0.40%	N/A	
Arsenic	1.7E-05	2.61%	*N/A*		*5.1E-5*	*1.82%*	N/A	
Benzo(a)anthracene	*1.3E-06*	0.21%	*N/A*		*4.0E-6*	*0.14%*	N/A	
Benzo(a)pyrene	*6.8E-06*	1.06%	*N/A*		*2.1E-5*	*0.74%*	N/A	
Benzo(b)fluoranthene	*1.4E-06*	0.22%	*N/A*		*4.2E-6*	*0.15%*	N/A	

See footnotes at end of table

TABLE B.4-8a
(Continued)

Medium/ Parameter	On-Property Resident Child	% Total Receptor Risk	Home-builder	% Total Receptor Risk	Perched Groundwater user	% Total Receptor Risk	Perched Groundwater Child	% Total Receptor Risk
Beryllium	*1.1E-06*	0.17%	*N/A*		*3.3E-6*	*0.12%*	N/A	
Dibenzo(a,h)anthracene	*1.5E-06*	0.23%	*N/A*		*4.5E-6*	*0.16%*	N/A	
Indeno(1,2,3-cd)pyrene	-	-	*N/A*		*1.5E-6*	*0.06%*	N/A	
Beef/Milk (Dust Affected):								
Radium-226	-	-	N/A		*5.1E-6*	*0.18%*	N/A	
Strontium-90	9.3E-06	1.46%	N/A		5.0E-05	1.79%	N/A	
Uranium-234	-	-	N/A		-	-	N/A	
Uranium-238	-	-	N/A		9.6E-06	0.34%	N/A	
Arsenic	1.6E-05	2.48%	N/A		6.7E-05	2.42%	N/A	
Benzo(a)anthracene	*6.3E-06*	0.98%	N/A		1.1E-05	0.39%	N/A	
Benzo(a)pyrene	1.1E-04	17.63%	N/A		2.0E-04	7.02%	N/A	
Benzo(b)fluoranthene	2.4E-05	3.80%	N/A		4.2E-05	1.51%	N/A	
Beryllium	-	-	N/A		*3.1E-6*	*0.11%*	N/A	
Dibenzo(a,h)anthracene	2.4E-04	37.99%	N/A		4.2E-04	15.13%	N/A	
Indeno(1,2,3-cd)pyrene	3.6E-05	5.62%	N/A		6.2E-05	2.24%	N/A	
Ambient Radon	-	-	N/A		1.4E-06	0.05%	N/A	

[a]Off-Property Resident Farmer and Child receptors did not have any COCs associated with them, therefore, were not included in this table.

[b]Sediment, groundwater, surface water, home grown produce (groundwater affected), perched groundwater, beef/milk (groundwater and surface water affected) pathways did not have any COCs associated with them, therefore, were not included in this table.

[c]No risk greater than the threshold level of 1×10^{-6}.

[d]N/A signifies that exposure of the receptor to the indicated medium is not applicable.

Comment No. 43

5894

000328

TABLE B.4-9a

LIME SLUDGE PONDS
CURRENT LAND USE
SUMMARY OF COC CARCINOGENIC RISK CONTRIBUTIONS[a,b]
OPERABLE UNIT 2 REMEDIAL INVESTIGATION
FERNALD ENVIRONMENTAL MANAGEMENT PROJECT

Medium/ Parameter	Trespassing Youth	% Total Medium Risk	% Total Receptor Risk	Groundskeeper	% Total Medium Risk	% Total Receptor Risk
Soil:						
Cesium-137	-[c]		-	1.1E-06		2.52%
Radium-226	2.5E-06		21.73%	9.3E-06		20.94%
Radium-228	1.0E-06		8.92%	3.8E-06		8.55%
Thorium-228	3.5E-06		30.63%	1.3E-05		29.45%
Thorium-230	-		-	-		-
Thorium-232	*2.41E-6*		*20.94%*	9.0E-06		20.13%
Uranium-238	-		-	3.9E-06		8.79%
Beef/Milk (Dust Affected):						
Aroclor-1254	N/A[d]					
Benzo(a)pyrene	N/A					

[a]Off-Property Resident Farmer and Off-Property Resident Child receptors did not have any COCs associated with them, therefore, are not included in this table.

[b]Groundwater, surface water, homegrown produce (dust and groundwater affected), beef/milk (groundwater affected) pathways did not have any COCs associated with them, therefore, were not included in this table.

[c]No risk greater than the threshold level of 1×10^{-6}.

[d]N/A signifies that exposure of the receptor to the indicated medium is not applicable.

Comment No . 43

5894

See footnotes at end of table

FER\CRU2\RICOMMEN\SKH\TABB4-9A\August29, 1994 3:19pm

5894

TABLE B.4-10a

LIME SLUDGE PONDS
FUTURE LAND USE
SUMMARY OF COC TOTAL CARCINOGENIC RISK CONTRIBUTIONS[a,b]
OPERABLE UNIT 2 REMEDIAL INVESTIGATION
FERNALD ENVIRONMENTAL MANAGEMENT PROJECT

Medium/ Parameter	Expanded Trespasser	% Total Receptor Risk	Off-Property Resident Farmer	% Total Receptor Risk
Soil:			-	-
Cesium-137	-[c]	-	-	-
Radium-226	5.2E-06	21.66	-	-
Radium-228	2.1E-06	8.88%	-	-
Thorium-228	7.3E-06	30.44%	-	-
Thorium-230	-	-	-	-
Thorium-232	5.0E-06	20.81%	-	-
Uranium-238	1.5E-06	6.37%	-	-
			-	-

See footnote at end of table

FER\CRU2RI\TLC\TABB4-10A\August29, 1994 3:27pm

TABLE B.4-10a
(Continued)

Medium/ Parameter	Off-Property Resident Child	% Total Receptor Risk	On-Property Resident Farmer (RME)	% Total Receptor Risk	On-Property Resident Farmer (CT)	% Total Receptor Risk	On-Property Resident Child	% Total Receptor Risk	Perched Groundwater User Adult	% Total Receptor Risk
Soil:	-	-								
Cesium-137	-	-	-	-	-	-	-	-	-	-
Radium-226	-	-	-	-	-	-	-	-	-	-
Radium-228	-	-	-	-	-	-	-	-	-	-
Thorium-228	-	-	-	-	-	-	-	-	-	-
Thorium-230	-	-	2.3E-06	16.94%	-	-	-	-	2.3E-06	2.93%
Thorium-232	-	-	-	-	-	-	-	-	-	-
Uranium-238	-	-	6.4E-06	48.39%	-	-	-	-	6.4E-06	8.38%
Perched Groundwater:										
Neptunium-237	-	-	-	-	-	-	-	-	5.5E-05	70.84%
Strontium-90	-	-	-	-	-	-	-	-	3.4E-06	4.38%
Technetium-99	-	-	-	-	-	-	-	-	5.2E-06	6.81%

[a]Perched Groundwater User, Off-property Resident Child, and Perched Groundwater Child receptors do not have any COCs and are not included in this table.

[b]Sediment, groundwater, surface water, perched groundwater, home grown produce (dust and groundwater affected), and beef/milk (dust and groundwater affected) pathways do not have any COCs associated with them, therefore, not included in this table.

[c]No risk greater than the threshold level of 1×10^{-6}.

000331

5894

See footnote at end of table

TABLE B.4-12(a)
COMPARISON SUMMARY OF BACKGROUND RISKS TO ON-SITE RISKS
ACTIVE FLYASH PILE: CARCINOGENS

Medium	Parameter	On-Property Resident Farmer (RME)	% of Total Medium Risk	% of Total Receptor Risk	Background	% of Total Medium Risk	% of Total Receptor Risk
Soil	CS-137	1.5E-11	0.00%	0.00%	6.8E-12	0.00%	0.00%
	NP-237	1.4E-07	8.01%	0.17%	0.0E+00	0.00%	0.00%
	PU-238	2.4E-08	1.37%	0.03%	0.0E+00	0.00%	0.00%
	PU-239/240	1.1E-08	0.63%	0.01%	0.0E+00	0.00%	0.00%
	RA-226	2.8E-08	1.62%	0.03%	7.5E-09	2.18%	0.07%
	RA-228	1.9E-09	0.11%	0.00%	6.8E-10	0.20%	0.01%
	SR-90	2.4E-10	0.01%	0.00%	0.0E+00	0.00%	0.00%
	TH-228	2.6E-07	14.87%	0.31%	7.6E-08	22.08%	0.66%
	TH-230	9.0E-08	5.18%	0.11%	3.8E-08	10.96%	0.33%
	TH-232	2.6E-07	14.94%	0.32%	1.0E-07	30.03%	0.90%
	U-234	8.1E-08	4.70%	0.10%	2.3E-08	6.82%	0.20%
	U-235/236	3.5E-09	0.20%	0.00%	1.9E-09	0.56%	0.02%
	U-238	1.6E-07	9.39%	0.20%	4.9E-08	14.18%	0.42%
	Total Radiological Risk	1.1E-06	61.04%	1.29%	3.0E-07	87.00%	2.60%
	Arsenic	6.6E-07	37.82%	0.80%	4.2E-08	12.28%	0.37%
	Beryllium	1.9E-08	1.11%	0.02%	2.4E-09	0.71%	0.02%
	Benzo(a)anthracene	3.3E-11	0.00%	0.00%	0.0E+00	0.00%	0.00%
	Benzo(a)pyrene	3.6E-10	0.02%	0.00%	0.0E+00	0.00%	0.00%
	Benzo(b)fluoranthene	5.3E-11	0.00%	0.00%	0.0E+00	0.00%	0.00%
	Total Chemical Risk	6.7E-07	38.96%	0.82%	4.5E-08	13.00%	0.39%
	Total	1.7E-06	100.00%	2.11%	3.4E-07	100.00%	2.99%
Groundwater	NP-237	3.4E-09	0.01%	0.00%	0.0E+00	0.00%	0.00%
	SR-90	9.6E-07	2.04%	1.18%	2.6E-07	3.24%	2.30%
	U-234	1.6E-05	32.87%	18.91%	2.8E-06	34.01%	24.16%
	U-235/236	8.2E-07	1.74%	1.00%	2.5E-07	3.06%	2.18%
	U-238	3.0E-05	63.34%	36.44%	4.9E-06	59.68%	42.39%
	Total Radiological Risk	4.7E-05	100.00%	57.54%	8.2E-06	100.00%	71.03%
	Arsenic	8.8E-15	0.00%	0.00%	0.0E+00	0.00%	0.00%
	Beryllium	4.3E-16	0.00%	0.00%	0.0E+00	0.00%	0.00%
	Total Chemical Risk	9.3E-15	0.00%	0.00%	0.0E+00	0.00%	0.00%
	Total	4.7E-05	100.00%	57.54%	8.2E-06	100.00%	71.03%
Homegrown Produce (Dust Affected)	CS-137	4.0E-10	0.03%	0.00%	1.8E-10	0.16%	0.00%
	NP-237	1.4E-08	0.96%	0.02%	0.0E+00	0.00%	0.00%
	PU-238	1.7E-09	0.12%	0.00%	0.0E+00	0.00%	0.00%
	PU-239/240	8.4E-10	0.06%	0.00%	0.0E+00	0.00%	0.00%
	RA-226	4.1E-08	2.89%	0.05%	1.1E-08	9.91%	0.09%
	RA-228	3.5E-09	0.25%	0.00%	1.3E-09	1.15%	0.01%
	SR-90	2.0E-09	0.14%	0.00%	0.0E+00	0.00%	0.00%
	TH-228	2.3E-09	0.16%	0.00%	6.7E-10	0.61%	0.01%
	TH-230	5.2E-10	0.04%	0.00%	2.2E-10	0.20%	0.00%
	TH-232	5.2E-09	0.37%	0.01%	2.1E-09	1.88%	0.02%
	U-234	6.4E-10	0.05%	0.00%	1.8E-10	0.17%	0.00%
	U-235/236	2.8E-11	0.00%	0.00%	1.6E-11	0.01%	0.00%
	U-238	1.1E-09	0.08%	0.00%	3.3E-10	0.30%	0.00%
	Total Radiological Risk	7.3E-08	5.15%	0.09%	1.6E-08	14.40%	0.14%
	Arsenic	1.2E-06	84.85%	1.46%	7.7E-08	70.07%	0.67%
	Beryllium	1.3E-07	9.51%	0.16%	1.7E-08	15.54%	0.15%
	Benzo(a)anthracene	5.3E-10	0.04%	0.00%	0.0E+00	0.00%	0.00%
	Benzo(a)pyrene	5.6E-09	0.40%	0.01%	0.0E+00	0.00%	0.00%
	Benzo(b)fluoranthene	8.4E-10	0.06%	0.00%	0.0E+00	0.00%	0.00%
	Total Chemical Risk	1.3E-06	94.85%	1.63%	9.4E-08	85.60%	0.82%
	Total	1.4E-06	100.00%	1.72%	1.1E-07	100.00%	0.96%

894

TABLE B.4-12(a)
(continued)

Medium	Parameter	On-Property Resident Farmer (RME)	% of Total Medium Risk	% of Total Receptor Risk	Background	% of Total Medium Risk	% of Total Receptor Risk
Homegrown Produce (Groundwater Affected)	NP-237	1.0E-09	0.00%	0.00%	0.0E+00	*0.00%*	*0.00%*
	RA-226	6.5E-06	27.16%	7.95%	0.0E+00	*0.00%*	*0.00%*
	SR-90	1.2E-05	50.36%	14.74%	9.2E-08	*3.57%*	*0.80%*
	U-234	2.5E-07	1.03%	0.30%	8.4E-07	*32.60%*	*7.28%*
	U-235/236	5.2E-06	21.44%	6.28%	7.5E-08	*2.94%*	*0.66%*
	U-238	0.0E+00	0.00%	0.00%	1.5E-06	*57.22%*	*12.78%*
	Total Radiological Risk	2.4E-05	100.00%	29.27%	2.5E-06	*96.34%*	*21.51%*
	Arsenic	3.4E-15	0.00%	0.00%	*7.7E-08*	*3.00%*	*0.67%*
	Beryllium	7.0E-17	0.00%	0.00%	*1.7E-08*	*0.66%*	*0.15%*
	Total Chemical Risk	3.5E-15	0.00%	0.00%	*9.4E-08*	*3.66%*	*0.00%*
	Total	2.4E-05	100.00%	29.27%	*2.6E-06*	*100.00%*	*21.51%*
Beef/Milk (Dust Affected)	CS-137	1.9E-09	0.41%	0.00%	8.7E-10	2.72%	0.01%
	NP-237	6.1E-11	0.01%	0.00%	0.0E+00	0.00%	0.00%
	PU-238	9.7E-14	0.00%	0.00%	0.0E+00	0.00%	0.00%
	PU-239/240	5.1E-14	0.00%	0.00%	0.0E+00	0.00%	0.00%
	RA-226	7.2E-09	1.54%	0.01%	1.9E-09	6.08%	0.02%
	RA-228	4.1E-10	0.09%	0.00%	1.5E-10	0.46%	0.00%
	SR-90	1.6E-09	0.34%	0.00%	0.0E+00	0.00%	0.00%
	TH-228	3.1E-12	0.00%	0.00%	9.1E-13	0.00%	0.00%
	TH-230	3.3E-12	0.00%	0.00%	1.4E-12	0.00%	0.00%
	TH-232	3.3E-11	0.01%	0.00%	1.3E-11	0.04%	0.00%
	U-234	8.9E-11	0.02%	0.00%	2.6E-11	0.08%	0.00%
	U-235/236	4.0E-12	0.00%	0.00%	2.2E-12	0.01%	0.00%
	U-238	1.6E-10	0.03%	0.00%	4.7E-11	0.15%	0.00%
	Total Radiological Risk	1.2E-08	2.45%	0.01%	3.0E-09	9.55%	0.02%
	Arsenic	4.2E-07	88.55%	0.51%	2.7E-08	84.30%	0.23%
	Beryllium	1.5E-08	3.26%	0.02%	2.0E-09	6.15%	0.02%
	Benzo(a)anthracene	7.9E-10	0.17%	0.00%	0.0E+00	0.00%	0.00%
	Benzo(a)pyrene	2.3E-08	4.83%	0.03%	0.0E+00	0.00%	0.00%
	Benzo(b)fluoranthene	3.5E-09	0.74%	0.00%	0.0E+00	0.00%	0.00%
	Total Chemical Risk	4.6E-07	97.55%	0.56%	2.9E-08	90.45%	0.25%
	Total	4.7E-07	100.00%	0.57%	3.2E-08	100.00%	0.27%
Beef/Milk (Groundwater Affected)	NP-237	3.1E-12	0.00%	0.00%	0.0E+00	0.00%	0.00%
	RA-226	6.5E-07	9.06%	0.80%	0.0E+00	0.00%	0.00%
	SR-90	6.0E-06	83.65%	7.35%	4.6E-08	0.56%	0.40%
	U-234	2.4E-08	0.33%	0.03%	8.1E-08	1.00%	0.71%
	U-235/236	5.0E-07	6.95%	0.61%	7.3E-09	0.09%	0.06%
	U-238	0.0E+00	0.00%	0.00%	1.4E-07	1.75%	1.24%
	Total Radiological Risk	7.2E-06	100.00%	8.79%	2.8E-07	3.40%	2.41%
	Arsenic	6.3E-16	0.00%	0.00%	0.0E+00	0.00%	0.00%
	Beryllium	3.7E-18	0.00%	0.00%	0.0E+00	0.00%	0.00%
	Total Chemical Risk	6.3E-16	0.00%	0.00%	0.0E+00	0.00%	0.00%
	Total	7.2E-06	100.00%	8.79%	2.8E-07	3.40%	0.00%
ALL MEDIA		8.2E-05			1.1E-05		

Comment No. 43

000333

FER\CRU2RI\ABQ\AFPBKC.XLS; 8/30/94; 4:56 PM

B.4.3.2 SOURCES OF UNCERTAINTY IN OPERABLE UNIT 2

As noted previously, uncertainties are associated with the information and data used for the selection of CPCs, exposure and toxicity assessments, and risk characterization for the Operable Unit 2 baseline risk assessment. Uncertainty in the selection of CPCs is associated with the analytical data. In the exposure assessment, these uncertainties are the result of a number of factors, including assumptions on land use and receptors, assumptions made for parameters and parameter variability (random errors or natural variations), and the necessity of using computer models to predict complex environmental interactions. Uncertainty associated with the toxicity assessment is associated with the dose-response data. As EPA has pointed out in their guidance for human health risk assessments, "it is more important to identify the key site-related variables and assumptions that contribute most to the uncertainty than to precisely quantify the degree of uncertainty in the risk assessment" (EPA 1989a). Uncertainties are evaluated in this section to provide a basis for interpreting the overall quality of the risk assessment results. Sources of uncertainty are discussed below.

B.4.3.2.1 Selection of Constituents of Potential Concern

Uncertainty associated with the selection process used to determine the CPCs in Operable Unit 2 can be attributed to the following major sources:}

- Evaluation of the existing data raises the question as to whether all pockets of elevated contamination have been identified. In general, it is believed that they have been identified for most radionuclides at the FEMP because of the detailed CIS field screening program performed. This is particularly important because risks from radionuclides dominate the overall risks to all receptors evaluated in this risk assessment. No conclusion can be drawn for chemical constituents detected on the property.
  No. 46 ***The impact of this uncertainty to total risk for a receptor may underestimate the risk by as much as one order of magnitude.***

- Sample analytical techniques produce results that have an unknown degree of uncertainty associated with them. These uncertainties are documented by using data qualifiers to reflect the assumed degree of certainty of measurement. These analytical uncertainties affect the selection of CPCs or the calculation of exposure point concentrations (either measured or modeled) that may be based on a particular analytical result. ***Data qualifiers were interpreted in a way that produced more false positives than negatives, causing a conservative impact and possible increasing risks up to one order of magnitude.***
  No. 46

- Concentrations of inorganics and radionuclides are compared to background concentrations to determine if their presence is do to naturally occurring concentrations from native soils or are due to site activities. However, sampling procedures for groundwater and air used to determine background concentrations have high detection limits. A chemical that was not detected during background sampling could result in the

46 erroneous inclusion of a chemical from those selected for further evaluation. ***The impact of this uncertainty is conservative by including CPCs that could be at background, causing a possible increase in risk by one order of magnitude.***

- The selection of CPCs includes minimally detected compounds or compounds with a small data set. The screening process for handling minimally detected compounds is to

include the compound as a CPC if it was detected once or more in more than one media (e.g. strontium-90 is detected once out of 20 samples in soils, and once out of 10 samples in surface water). In this instance the one or two hits are assumed to be hot-spot indications and not outliers, and are conservatively included as CPCs if the highest hit passes the other screening criteria. This conservative assumption ignores the many non-detected values in a population and overestimates the impact of that compound on the risk. ***The impact of this uncertainty on risks to receptors could overestimate the risk by greater than one order of magnitude***

No. 46

B.4.3.2.2 Uncertainty in Exposure Assessment

Sources of uncertainty for the exposure assessment arise from calculation of exposure point concentrations, selection of receptors, determination of land use scenarios and selection of exposure factors.

B.4.3.2.3 Exposure Point Concentrations

Uncertainty associated with calculation of exposure point concentrations in Operable Unit 2 can be attributed to the following sources:

- According to the "Risk Assessment Guidance for Superfund" (EPA 1989a), the UCLs are used for all exposure concentrations. This means that 95 percent of the time, the actual mean concentration can be less than the value used in the exposure assessment. Conversely, 5 percent of the time the actual mean concentration can be greater than the value used in the exposure assessment. Therefore the exposure assessment may underestimate the exposures in 5 percent of the cases, and overestimate exposures 95 percent of the time. ***This assumption will overestimate the risk by maximally exposing the receptor. The impact varies depending on concentration distribution, but could be up to one order of magnitude.***

No. 46

- Sample analytical techniques produce results that have a degree of uncertainty associated with them. These uncertainties are documented by using data qualifiers to reflect the degree of uncertainty of measurement. These analytical uncertainties affect the exposure point concentrations (either measured or modeled) that may be based on a particular analytical result. ***Data qualifiers were interpreted in a way that produced more fals positives than false negatives, causing an overestimation of risk by up to one order of magnitude.***

No. 46

- There is also large uncertainty when exposure concentrations were based on the maximum detected concentration. The conservative approach was taken in the statistical interpretation for the selection of minimally detected compounds and their concentration term. The screening methodology for handling minimally detected compounds was to include the compound in the risk assessment if it was detected more than once in more than one media (e.g. strontium-90 is detected once out of 20 samples in soils, and once out of 10 samples in surface water). In this instance it is difficult to determine statistical properties of a data set when most of the samples are non-detects, or when there are only

a few data points. The screening methodology is to set the concentration term, which is used as the source term in the risk assessment, to the highest detection when a 95 UCL cannot be calculated. An example of this is technetium-99 in the South Field. Technetium-99 was only detected once out of 21 samples in the surface soil and 4 times out of 90 samples in the subsurface soil, but since it was detected more than once it was

included as a CPC for the South Field. Since there were so few detections, the screening methodology took the highest detection as the concentration term to be used in the risk assessment. The maximum hit was 142 pCi/g, 20 times greater than the mean of 7 pCi/g. So the risk assessment assumed that a concentration of 142 pCi/g of technetium-99 was present across the surface of the South Field, and as a result technetium-99 drives 46 to 51 percent of the total Great Miami River recreational and residential user risks, 23 percent of the RME farmers total risk, 18 percent of the CT farmers total risk, and 14 percent of the on-property child's total risk. This is a large overestimation of risk due to technetium-99 as a result of taking the maximum hit when a 95 UCL could not be determined. ***This uncertainty could overestimate risks by more than one order of magnitude.***

No. 46

Predicted concentrations were used as exposure point concentrations when measured data were not available (e.g., the future). These predictions were made using mathematical representations (models) of the natural systems found or suspected to exist in the study area. Due to the complexity of natural environments, conservative assumptions were often used in these models to calculate exposure point concentrations. When a number of conservative assumptions are combined into one fate and transport model, uncertainties can be compounded and provide very conservative estimates of the exposure point concentration. These assumptions are typically made to avoid underestimating the concentrations of contaminants in transport or exposure media (e.g., air or groundwater). As a result, transport parameters are chosen from the upper bound of possible alternative values and the uncertainties associated with modeled concentrations will generally be much larger than those associated with measured data. Uncertainties associated with modeled exposure point concentrations in Operable Unit 2 can be attributed to the following sources:

- Use of Toxicity Characteristic Leaching Procedure (TCLP) data to characterize leachate concentrations in the natural environment adds conservatism to the groundwater fate and transport modeling process because TCLP leaching is performed with an acidic solution. This tends to overestimate the leachate concentration of inorganics over natural (more neutral) leaching conditions. ***This impact is less than one order of magnitude overestimation.***

No. 46

- The selection of parameters related to the attenuation and retardation of constituents is a major uncertainty in the analysis. The attenuation and retardation factors of every constituent except uranium were determined after an extensive literature search. It should be noted here that the actual retardation factors at the FEMP may not follow the assumed literature values, particularly over the long term. Site-specific attenuation and retardation factors are used when available. The use of site-specific values are assumed to result in lower uncertainty than using literature values. ***The impact on risk could overestimate or underestimate risks up to one order of magnitude.***

No. 46

- The organic decay rates at the FEMP were determined after an extensive literature search. The actual decay rates may or may not follow the assumed literature values because of site-specific conditions. The use of site data to determine organic decay rates

No. 46 is assumed to result in lower uncertainty than that resulting from the use of literature values. ***The variation could impact risk, potentially causing their overestimation or underestimation by up to one order of magnitude.***

- Transport through the vadose zone is approximated by using a one-dimensional model and assuming ~~the zone~~ ***that each of the two zones*** is homogeneous. The unsaturated seepage flow rate is a function of several parameters, such as porosity, residual saturation, and pore size distribution index. Due to the heterogeneous nature of the till, these parameters change from location to location and from depth to depth. ***This uncertainty could cause the overestimation or underestimation of risks by up to one order of magnitude.*** *No. 46*

- The total mass of each contaminant is calculated by multiplying the UCL by the volume of the entire waste area, except for uranium-238 which was kriged, thus assuming the UCL concentration is uniformly distributed through the entire source. ***This uncertainty could overestimate or underestimate risks by one to two orders of magnitude because the UCL is often much greater than the mean concentration.*** *No. 46*

- The fate and transport modeling uses a "70-year rule" for these constituents where no or inadequate leachate data exist. This "rule" assumes all the chemical leaches from a particular waste unit in 70 years. This method is considered very conservative for compounds that are insoluble but may underestimate the maximum exposure for soluble compounds. However, the application of this methodology to these constituents is considered conservative because these particular compounds have rather low solubilities and high partitioning coefficients. PAHs, in general, contribute an insignificant proportion to the total hazard index. Therefore, the application of this assumption is assumed to have a low impact on the risk assessment. ***Although it may underestimate maximum exposure concentration for soluble compounds, it also overestimates exposure time. this uncertainty could overestimate the risk due to certain constituents by more than one order of magnitude.*** *No. 46*

- Air modeling is based on a number of conservative assumptions. In combination these assumptions appear to overestimate the exposure point concentrations for air based on site air monitoring data and according to a literature search for typical ambient air PM_{10} measurements for EPA Region V. The long-term average PM_{10} concentrations calculated are comparable to measured dust concentrations on constructions. This uncertainty is expected to moderately overestimate risk (i.e., overestimate risks by 1 to 2 orders-of-magnitude).

- The future configuration of the Operable Unit 2 subunits is uncertain at this time; thus, a reasonable worst-case configuration is used to determine source concentrations for both air and surface water modeling. If the actual configuration differs from that used in this evaluation, the future source concentrations may change and the models will have incorrectly estimated the exposure point concentrations. ***This uncertainty could casue an overestimation or underestimation of risks by up to one order of magnitude.*** *No. 46*

- The transport models individually made assumptions regarding the fate of individual constituents within source media. However, these models were not combined or linked to consider assumptions made regarding depletion of chemicals from one model and the

No. 46

effect of that assumption on another model (i.e., the leaching models did not consider source depletion from volatilization or fugitive emissions and the air emissions models did not consider losses via leaching). Furthermore, the direct exposure pathways to a particular source (i.e., incidental ingestion of surface soil) did not consider source depletion by leaching, surface water transport, or air emissions. Consequently, this assumption is considered very conservative, ***causing an overestimation of one to tow orders of magnitude for the pathways impacted.***

this receptor from the CT scenario to the RME scenario seeks to incorporate the range of uncertainty regarding intake assumptions for this receptor.

B.4.3.3 Toxicity Assessment

Uncertainty associated with the toxicity assessment is associated with hazard assessment and dose-response evaluations for CPCs. The hazard assessment deals with characterizing the nature and strength of the evidence of causation, or the likelihood that a chemical that induces adverse effects in animals will induce adverse effects in humans. Hazard assessment of carcinogenicity is evaluated as a weight-of-evidence determination, using either the IARC (1987) or EPA (1986b) methods. Positive animal cancer test data suggest that human tissue(s) may also manifest a carcinogenic response; however, animal data do not always accurately predict the same response on the same target tissue in humans. In the hazard assessment of noncancer effects, however, positive animal data suggest the nature of the possible adverse
No. 48 effects (i.e., the target tissues and type of effects) anticipated to occur in humans (EPA 1989~~i~~ *f*).

Uncertainty in hazard assessment arises from the nature and quality (sensitivity and selectivity) of the animal and human data. Uncertainty is decreased when similar effects are observed across species, strain, sex, and exposure route; when the magnitude of the response is clearly dose-related; when pharmacokinetic data indicate a similar fate in animals and humans; when postulated mechanisms of toxicity are similar for humans and animals; and when the CPC is structurally similar to other chemicals for which the toxicity is more completely characterized.

Uncertainty in the dose-response evaluation includes the determination of a slope factor for the carcinogenic assessment and derivation of an RfD or RfC for the noncarcinogenic assessment. Uncertainty is introduced from interspecies (animal-to-human) extrapolation, which, in the absence of quantitative pharmacokinetic, dosimetric, or mechanistic data, is usually based on consideration of interspecies differences in basic metabolism. Uncertainty also results from intraspecies, or individual, variation. Most toxicity experiments are performed with animals that are very similar in age and genotype, so that intragroup biological variation is minimal. However the human population of concern may reflect a great deal of heterogeneity including unusual sensitivity or tolerance to the CPC. Even toxicity data from human occupational exposures reflect a bias because only those individuals sufficiently healthy to attend work regularly and those not unusually sensitive to the CPC, are likely to be occupationally exposed. Finally, uncertainty arises from the quality of the key study (from which the quantitative estimate is derived) and the database. For cancer effects, the uncertainty associated with

deliver a radiation dose. Lung cancer results when the bronchial epithelium of the lung passages is exposed to alpha particles emitted from decaying radon progeny (i.e., Po-214 and Po-218) lodged in the lung passages.

Three isotopes of radon are of potential concern, one associated with each of the three natural decay series. Rn-222, Rn-220, and Rn-219 are members of the uranium, thorium, and actinium decay series, respectively. Rn-222 is the isotope of primary concern because its half-life 3.82 days and mobility as an inert gas facilitate its outdoor and indoor migration, thus potentially exposing receptors to elevated concentrations of Rn-222 and its short-lived progeny. Rn-220 (half-life, 55.6 seconds) and Rn-219 (3.96 seconds) are generally of less concern because their very short half-lives often result in decay before these can migrate and accumulate in elevated quantities where receptors may be exposed. For example, all three isotopes of radon may be of concern in the air in buildings that contain the appropriate parent radionuclides (in the form of surface contamination or drummed material, for example). At the FEMP, however, Rn-220 and Rn-219 are not expected to be released from a source such as the K-65 silos because their short half-lives cause them to decay before migrating out of the waste matrix or out of the containment provided by the silos.

Dose Response Data - Human and Animal

The following discussion regarding the health effects of exposure to radon and radon progeny is summarized from the report of the BEIR IV Committee on radon and other alpha emitters (NAS 1988). The radiological effect of concern from exposure is lung cancer.

The lung cancer hazard associated with working in underground mines was first recognized by Harting and Hesse in 1879 as a result of autopsies of European miners (Harting and Hesse 1879). The most important human populations studied with regard to radon progeny exposure were the underground miners exposed to widely differing concentrations of airborne Rn-222 progeny in mines
No. 48 (NCRP 1984*b*). The lung cancer mortality risk estimates for radon progeny exposure published by the BEIR IV Committee (NAS 1988) were based on an epidemiological study of these underground miner populations. The assessment of the risk from exposure to radon progeny by the BEIR IV Committee represents the most recent comprehensive examination of estimated health risks associated with exposure.

The model developed by the BEIR IV Committee may be used to estimate risks under other environmental conditions to which persons may be routinely exposed; however, it must be recognized that the committee's model was based on epidemiological evaluations of occupational exposure conditions in underground mines. Therefore, assumptions must be made regarding the similarity of exposed populations, levels of exposure, and factors such as cigarette smoking, when using the model for nonoccupational conditions such as the indoor home environment.

Using the BEIR IV risk factor (NAS 1988) of 350 x 10^{-6} WLM^{-1} for lung cancer mortality from inhalation of Rn-222 and progeny, and by assuming 51.5 working months per year (8760 hours per year divided by 170 hours worked per month), 100 pCi Rn/liter air, short-lived Rn-222 progeny present in 50 percent equilibrium, and an inhalation rate of 20 m^3/day for 365 days/year, one can derive a lung cancer mortality risk factor of 1.2 x 10^{-11} per pCi. The EPA cancer slope factor from
No. 48 HEAST for inhalation of Rn-222 plus progeny is 7.7 x 10^{-12} per pCi (EPA 1992~~d~~ *b*). It must be noted that the BEIR IV risk estimate pertains to lung cancer mortality, while the EPA cancer slope factors all pertain to cancer induction rather than cancer fatality.

B.II.1.7 Ruthenium-106

Pharmacokinetics

The biochemistry and metabolism of ruthenium and its salts have not been investigated in detail. Ruthenium chelates are readily absorbed and rapidly excreted. A transient retention of ruthenium occurs in the kidneys, muscle, liver, bone, and probably also in the lungs during experiments using radioruthenium chloride.

Once absorbed into the bone, ruthenium is retained for a long time (Léonard 1988).

The EPA (1993c) has derived a gastrointestinal absorption factor for ruthenium of 0.05, equivalent to 5 percent.

Noncarcinogenic Toxicity

Most ruthenium salts are considered to be slightly toxic, but fumes of ruthenium tetroxide and of ruthenium heated in air are highly injurious to the eyes and the lung and can produce nasal ulcerations.

slow. Th-232 decays by alpha particle emission, as do most of the progeny in the thorium natural decay series.

Thorium has historically been used as a medical imaging agent, because it is a heavy atom that provides contrast in radiographic imaging. In this role thorium has been used commercially as Thorotrast, a 25-percent colloidal solution of thorium dioxide. The following discussion of the health effects from thorium exposure is summarized from the report of the BEIR IV Committee on radon and other alpha emitters (NAS 1988).

Thorotrast has been used extensively in the United States, Europe, and Japan as an intravascular contrast agent for cerebral and limb angiography. Thorotrast has also been injected into the spleen for hepatolienography and into nasal and paranasal sinuses. These uses of Thorotrast result in deposition of the thorium (and subsequent decay products) in tissues and organs of the body, most frequently in the reticuloendothelial tissues in bone (NAS 1988). Once deposited in these tissues, alpha particle emissions from the decay of Th-232 and its progeny irradiate the tissues for long periods of time at low-dose rates.

Dose-Response Data - Human

The data on human health effects of thorium exposure are based primarily on epidemiological studies of Thorotrast patients. The five long-term studies include German, Portuguese, Japanese, Danish, and American patients. In the German study (van Kaick et al. 1978a, ~~and~~ *1978*b, 1983, 1984*a*, *1984b*, 1986), 5159 Thorotrast patients and 5151 controls were followed since 1933 and 1935, respectively. The Thorotrast patients underwent intravascular injections of Thorotrast to enhance the imaging of cerebral and limb angiography. The results of the follow-up analysis indicated an excess of malignant cancers, most notably liver cancers and leukemias, among the patients relative to the controls.

No. 48

The Portuguese study (Abbatt 1973; da Motta et al. 1979; Horta et al. 1978) involved about 2500 Thorotrast patients and 2000 controls with a follow-up period of about 30 years. The patients were exposed to Thorotrast from 1929 to 1955, with roughly 60 percent receiving Thorotrast doses for cerebral angiography. The results of the study show a significant excess of malignant cancer deaths among the patients compared to the control group. Particularly notable were the excess patient liver malignancies compared to the controls.

Dose Response Data - Animal

Experimental studies of animals administered modified Thorotrast solutions provide insight into the possible influence of Thorotrast on carcinogenicity in humans from a "foreign body effect" (i.e., from the colloid solution), or a toxicological effect of the thorium in addition to a radiation dose effect. Studies of mice administered Thorotrast solutions fortified with Th-230 to increase the specific activity of alpha emission delivering radiation dose to tissues, conventional Thorotrast, and zirconium dioxide solution (Zirconotrast) have provided evidence of increased carcinogenicity of Thorotrast relative to Zirconotrast (Bensted 1967). Rabbits injected with Th-230 enriched Thorotrast revealed a shortened latency period associated with the higher specific activity solution (Faber 1973). In mice, rabbits, rats, and dogs, the metabolic distribution of Thorotrast and other colloid solutions (including zirconium and hafnium dioxide colloids) has indicated that 1) the organ distribution of the Thorotrast and associated progeny in these animals is comparable to that in humans (Riedel et al. 1979, 1983) and 2) the other colloids fail to reveal significantly different effects attributable to their distributions compared to the Thorotrast (Riedel et al. 1979, 1983).

A study of dose response and possible foreign body effect in rats (Wesch et al. 1973, 1983) was conducted by administering different Th-230 enrichments of Thorotrast (causing variations in dose rate) and by administering different volumes of Thorotrast (dilutions maintaining constant dose rate). The results demonstrated that the frequency of cancers follows a linear dependence with dose rate. However, varying the volume of Thorotrast administered did not correlate with frequency of induction. Although cancer risk did not increase with the volume of Thorotrast at a constant dose rate, the latent period was shortened (Wesch et al. 1973; 1983).

In additional studies of rats injected with Zirconotrast enriched with Th-228, the number of induced cancers increased, and the induced cancers were similar to those induced in humans by Thorotrast
No. 48 (Wesch *et al.* 1986). The frequency of cancer induction was found to be dose-rate dependent, and the Zirconotrast without Th-228 did not induce excess cancers (Wesch 1986).

In summary, the animal experimental evidence indicates that Thorotrast induces cancers as a result of the radiation dose delivered by the solution. The physical presence of particles in the colloid solution and the chemical effect of the thorium are not likely to influence the induction of cancer (NAS 1988). The EPA derived slope factors are presented in Table B.II.1-1.

Dose-Response Data - Animal Models

Animal models have demonstrated a of variation of responses in acute intravenous toxicity studies. Rabbits and guinea pigs appear to be the most sensitive. The acute intravenous toxicity of soluble uranium compounds such as uranyl nitrate has been shown to be very high; the approximate dose at which 50 percent of the test organisms do not survive (LD_{50}) for rabbits is 0.1 mg/kg, for guinea pigs 0.3 mg/kg, for rats 1 mg/kg, and for mice 10 to 20 mg/kg (Stokinger 1982).

In chronic animal studies sublethal threshold doses of uranium have been demonstrated (Leggett 1989). Although the exact mechanism of tolerance is not known, it is believed that regenerated kidney tissue is associated with tolerance. When uranium exposure ceases, the regenerated epithelium transforms into normal renal tubular tissue (Yuile 1973).

An extensive chronic feeding study was performed on rabbits, rats, and dogs for periods of 30 days, 1 year, and 2 years (Maynard and Hodge 1949). These animals received uranium doses of 2.8, 14, and 71 mg/kg/day in the diet. Rabbits were maintained for 30 days, dogs for 1 year, and rats for 1 to 2 years. For all species, water soluble compounds were more toxic than insoluble compounds. The lowest observed adverse effect levels (LOAELs) were established for all compounds and each species (Maynard and Hodge 1949). In all cases, the LOAEL could be established within the first 30 days (EPA 1991f). Of the three species, rabbits appeared to be the most sensitive, with renal damage exhibited at all administered dose levels. The renal damage was judged to be only moderate at the lower doses, but moderately severe at the highest dose. Based on this study, the EPA has established the lowest uranium dose of 2.8 mg/kg/day as the LOAEL (EPA 1991f).

Basis for Reference Dose

The EPA (1991f) has established an RfD for uranium of 3 μg/kg/day. In lieu of a no observed adverse effect level (NOAEL), the RfD was based on the LOAEL of 2.8 mg/kg/day (Maynard and Hodge 1949) and an uncertainty factor of 1000. The uncertainty factor accounts for intraspecies and interspecies variability in toxicological response and for the use of the LOAEL rather than an NOAEL. No factor was included for the short duration of the exposure (30 days), because it has been shown that chronic nephrotoxic effects can be adequately characterized with experiments of
No. 48 acute/subacute duration (EPA 1991~~f~~ *b*).

000347

B.II.2 TOXICITY PROFILES: CHEMICALS

B.II.2.1 2-Methylnaphthalene

Noncarcinogenic Toxicity

Data located regarding the noncancer toxicity of 2-methylnaphthalene are limited to an oral lowest dose associated with lethality (LD_{Lo}) in rats of 5000 mg/kg (Sax 1984). Neither oral nor inhalation RfD or RfC values were located.

Carcinogenicity

Data regarding the carcinogenicity of 2-methylnaphthalene were not located.

B.II.2.2 Acrylonitrile

Toxicity

Short exposures at high concentrations show cyanide-type toxicity. In humans, symptoms include headaches, feelings of nausea, irritability, and apprehension. Prolonged exposure can result in death. Children may be more suspectable to acrylonitrile toxicity than adults. In animals, acrylonitrile has been shown to result in teratogenic effects when administered by either the inhalation or oral routes of exposure. Impaired reproductive capability has also been demonstrated in mice. Epidemiologic studies have associated acrylonitrile exposure in the workplace with increased incidence of lung cancer and possibly prostate cancer. In animals, acrylonitrile has been demonstrated to cause tumors at multiple sites, including the nervous system, gastrointestinal tract, Zymbal gland and mammary gland. Humans exposed to high levels of acrylonitrile in the workplace have complained of nasal
No. 48 irritation and an oppressive feeling in the upper respiratory passages (Wilson, 1944; Wilson et al., 1948, ***Cited in ATSDR 1990b***). Acute exposure of guinea pigs to acrylonitrile has resulted in severe pulmonary irritation and lung edema. In humans, severe cases of acrylonitrile poisoning have resulted in low-grade anemia (Wilson, 1944; Wilson et al., 1948, ***Cited in ATSDR 1990b***). Some liver damage has been reported in humans after acute exposure to high doses. In workers exposed to high levels of acrylonitrile vapors, mild jaundice was diagnosed (Wilson, 1944, ***Cited in ATSDR 1990b***). Direct contact of acrylonitrile with the skin has resulted in erythema, desquamation, and slow healing (Dudley and Neal, 1942, ***Cited in ATSDR 1990b***). Acute effects have been described as being a cyanide-type poisoning (Dudley and Neal, 1942; Vogel and Kirkendall, 1984, ***Cited in ATSDR 1990b***) associated with acrylonitrile poisoning in humans include limb weakness, labored and irregular breathing, dizziness and impaired judgement, cyanosis and nausea, collapse, and convulsions

(Baxter, 1979, *Cited in ATSDR 1990b*). Major metabolic pathways include cyanide and thiocyanate as products of acrylonitrile metabolism (Ahmed

et al., 1983; EPA, 1980a ~~b~~; Langvardt et al., 1980; Pilon et al., 1988a, ***Cited in ATSDR 1990b***). The formation of cyanide following oral exposure is greater than inhalation or subcutaneous exposure (Gut et al., 1975, ***Cited in ATSDR 1990b***). Acute exposure of several species of animals have been reported to lead to convulsions and coma (Dudley and Neal, 1942, ***Cited in ATSDR 1990b***). The genotoxicity of acrylonitrile has been extensively studied. Positive results have been observed for all end points evaluated: gene mutations, chromosomal aberrations, DNA damage, and cell transformation. Tests in *Drosophila melanogaster* suggest that acrylonitrile may have the potential for genotoxicity in vivo.

Carcinogenicity

Studies in rats by inhalation and oral exposure have all demonstrated that acrylonitrile is carcinogenic. Multiple tumor sites have been identified (Bio/dynamics, 1980a, 1980b, 1980c; Quast et al., 1980a, 1980b, ***Cited in ATSDR 1990b***). There is limited evidence that acrylonitrile is a human carcinogen. Exposure to acrylonitrile results in an increased incidence of lung cancer (O'Berg, 1980; O'Berg et al., 1985, ***Cited in ATSDR 1990b***). Acrylonitrile exposure may result in an increased incidence of prostate cancer (Chen et al., 1987; O'Berg et al., 1985, ***Cited in ATSDR 1990b***). EPA has classified acrylonitrile as a probable human carcinogen (~~IRIS~~ ***EPA***, 1988***a***). There is sufficient evidence in animals to show that acrylonitrile is carcinogenic, but the human evidence is limited.

B.II.2.3 Antimony

Noncarcinogenic Toxicity

Chronic oral exposure studies in animal models include two briefly reported lifetime drinking water studies with potassium antimony tartrate in rats and mice that reported reduced longevity in both species and reduced mean heart weight and altered blood chemistry in the rats (EPA 1992d). A verified chronic oral RfD of 0.0004 mg/kg/day was based on the rat study and an uncertainty factor of 1000.

Chronic effects from occupational exposure include irritation of the respiratory tract, pneumoconiosis, pustular eruptions of the skin called "antimony spots," allergic contact dermatitis, and cardiac effects, including abnormalities of the ECG and myocardial changes (Elinder and Friberg 1986, ***Cited in ATSDR 1991a***). Cardiac effects were also observed in rats and rabbits exposed by inhalation for six weeks, and in animals (dogs and possibly other species) treated by intravenous injection. Inhalation

48 RfC values are not available from the EPA. The heart, respiratory tract, and skin are the principal target organs for antimony.

(1993*a*) proposed an inorganic arsenic ingestion unit risk of 5.0 x 10^{-5} per mg/l. The equivalent oral slope factor is 1.75 per mg/kg/day assuming a 70 kg adult ingests 2 liters per day. "The uncertainties associated with ingested inorganic arsenic are such that estimates could be revised downward as much as an order of magnitude, relative to the risk estimates associated with most other carcinogens."

B.II.2.6 Beryllium

Noncarcinogenic Toxicity

Beryllium has a low order of toxicity when ingested because it is poorly absorbed from the gastrointestinal tract (Reeves 1986, ***Cited in ATSDR 1992b***). Occupational exposure has induced dermatitis, acute pneumonitis, and chronic pulmonary granulomatosis (berylliosis). Berylliosis was also observed in humans living in the vicinity of a beryllium plant. Pulmonary effects also occurred in laboratory animals subjected to inhalation exposure. A verified chronic oral RfD value of 0.005 mg/kg/day was based on a NOAEL of 0.54 mg/kg/day in a lifetime drinking water study with beryllium sulfate in the rat, and on an uncertainty factor of 100 (EPA 1991c). The target organs for inhalation exposure appear to be the lungs; target organs for oral exposure are not identified.

Carcinogenicity

The EPA (1991c) has classified beryllium in cancer weight-of-evidence Group B2 (probable human carcinogen), based on inadequate human data but sufficient animal data. The human data consist of occupational studies that weakly associate exposure with increased risk of lung cancer, but confounding variables were not controlled and the studies lacked sensitivity. A significant increase in lung tumors occurred in three strains of rats and in rhesus monkeys subjected to inhalation exposure or intratracheal instillation of a variety of beryllium compounds. Osteogenic sarcomas were induced in rabbits and mice, but not in rats or guinea pigs injected intravenously with various beryllium compounds. Oral studies in animals models yielded inconclusive results. The EPA (1991c) derived an oral slope factor of 4.3 per mg/kg/day from a slight but statistically nonsignificant increase in total tumors in a lifetime drinking water study with beryllium sulfate in the rat. An inhalation unit risk of 0.0024 per $\mu g/m^3$, equivalent to 8.4 per mg/kg/day (assuming humans inhale 20 m^3 of air per day and weigh 70 kilograms), was derived from a human occupational study.

B.II.2.7 Carbazole

Noncarcinogenic Toxicity

Only the oral LD_{50} in rats for carbazole has been located. The oral LD_{50} in rats is reported to be greater than 5000 mg/kg (EPA 1993d).

The EPA has not derived chronic oral and chronic inhalation reference doses for carbazole.

Carcinogenicity

The EPA has classified carbazole as a cancer weight-of-evidence Group B2 substance (probable human carcinogen) based on liver tumors in mice administered carbazole in the diet. The EPA has derived an oral cancer slope factor of 2×10^{-2} mg/kg/day (EPA 1993c).

B.II.2.8 Dieldrin

Toxicity

Dieldrin is toxic to both humans and animals. Clinical observations in humans indicate that the primary symptoms resulting from acute exposure to dieldrin are manifested as neurological and respiratory effects. Dieldrin exposures result in neurological effects which may include central nervous system excitation, convulsions, tremor, ataxia, agitation, nervousness and amnesia. Disturbances of sleep, memory and behavior may persist for several days or weeks after the acute
No. 48 phase of poisoning (Gosselin, 1984, ***Cited in EPA 1994***). In extreme overdoses central nervous system depression and may result in death which arises from respiratory depression. Repeated exposures to spraymen resulted in a syndrome indistinguishable from idiopathic epilepsy which ceased when exposure was terminated (Hayes, W.J. 1957, as cited in ~~HSDB~~ ***EPA***, 1994). In addition exposure via ingestion may cause nausea, vomiting and diarrhea. Hematological changes include blood dyscrasia, anemia and leukemia. Dermal exposures result in irritation. Deaths associated with acute dieldrin toxic exposures were not reported.

Carcinogenicity

Dieldrin has been classified as a probable human carcinogen (group B2) based on inadequate human carcinogenicity data and sufficient animal carcinogenicity data (~~IRIS~~ ***EPA***, 1994). Animal carcinogenicity data demonstrates that dieldrin is carcinogenic in both sexes of different strains of mice. Dose response data support these effects as ranging from benign liver tumors, to

hepatocellular tumors were identified most frequently. Human carcinogenicity data is limited to one retrospective study which reported no statistically significant increases in cancer deaths among 1155 organochlorine pesticide manufacturing workers (Ditraglia, 1981 as cited in ~~IRIS,~~ *EPA* 1994). In addition, two studies of workers exposed to aldrin and dieldrin reported no increase in the incidence of cancer. Van Raalte (1977, as cited in ~~IRIS~~ *EPA,* 1994) observed two cases of cancer (gastric and lymphosarcoma) among 166 pesticide manufacturing workers exposed 4-19 years and followed from 15-20 years. However, exposure was not quantified and workers were exposed to other pesticides (endrin and telodrin). In addition, the population of workers studied was small and the age of the cohort was young and the number of expected deaths was not calculated. Last, the duration of exposure and of latency was relatively short.

No. 48

B.II.2.9 1,4-Dioxane

Noncancer Toxicity

The acute oral toxicity of 1,4-dioxane is low; $LD_{50/30}$ values in laboratory animals ranged from 2000 to 6000 mg/kg (ACGIH 1991). Repeated oral exposure was associated with severe liver and kidney pathology. Inhalation studies in laboratory animals failed to identify adverse effects. Liver and kidney pathology were observed in workers exposed to high levels in the air. Neither oral nor inhalation RfD or RfC values were located for 1,4-dioxane. The target organs for oral exposure to 1,4-dioxane are the liver and kidney.

Carcinogenicity

Cancer studies consistently associated drinking water exposure of rats to 1,4-dioxane with increased incidence of nasal cavity and liver tumors (EPA 1993a). Drinking water exposure of mice resulted in increased incidence of liver tumors. An inhalation study in rats was negative. Occupational studies are inadequate to implicate 1,4-dioxane as a human carcinogen. On the basis of sufficient evidence for carcinogenicity in animals and inadequate evidence in humans, 1,4-dioxane is classified a cancer weight-of-evidence Group B2 compound (probable human carcinogen). The EPA (1993a) derived an oral slope factor of 0.011 per mg/kg/day, based on carcinomas of the nasal turbinates in orally exposed rats. Risk associated with inhalation exposure was not estimated.

B.II.2.10 Dioxin/Furan

No data were located regarding the pharmacokinetics of the polychlorinated dibenzo-p-dioxins (PCDDs) or (PCDFs) of concern; however, 2,3,7,8-tetrachlorodibenzo-p-dioxin (TCDD) has been

used as a surrogate for other structurally similar members of these chemical classes. Estimates of the gastrointestinal absorption of TCDD ranged from 50 to 86 percent of the administered dose in rats; comparable data were obtained for rates and hamsters (Fries and Morrow 1975; Nolan et al. 1979; Olson et al. ~~1986~~ ***1983, Cited in ATSDR 1990a***). In rats treated dermally with 26 ng TCDD in methanol dermal absorption after 24 hours approximated 40 percent of that absorbed by the gastrointestinal tract after an equivalent dose in ethanol (Poiger and Schlatter 1980, ***Cited in ATSDR 1990a***). Dermal absorption from vaseline or polyethylene glycol vehicles was substantially less than from methanol, but quantitative estimates cannot be made from the available data.

No. 48

In rodents given single oral or intrapeitonel doses, or treated for two years with TCDD in the diet, the highest concentrations and greatest tissue depots occurred in the liver, followed closely by adipose tissue (Piper et al. 1973; Poiger and Schlatter 1979; Rose et al. ~~1976~~ ***1975***; Kociba et al. 1976, ***Cited in ATSDR 1990a***). Concentrations in other tissues were considerably lower than those in fat. Mouse liver continued to sequester TCDD more efficiently with prolonged exposure (Teitelbaum and Poland 1978, ***Cited in ATSDR 1990a***). In nonhuman primates and guinea pigs, however, greater TCDD concentrations and tissue depots occurred in the adipose tissue than in the liver (Nolan et al. 1979; Van Miller et al. 1976, ***Cited in ATSDR 1990a***). Data obtained at necropsy from one woman potentially exposed to TCDD showed concentrations in adipose tissue about an order of magnitude higher than levels in the liver (Facchetti et al. 1980, ***Cited in ATSDR 1990a***). Radioactivity from intravenous dosing with [^{14}C]2,3,7,8-TCDD has been shown to cross the placenta of rats and mice; concentrations of fetal tissues were lower than in maternal tissues (Moore et al. 1976; Nau and Bass 1981, ***Cited in ATSDR 1990a***).

In rodents and guinea pigs, TCDD was metabolized by microsomal mixed-function oxidase enzymes to hydroxylated derivatives that were conjugated with glucuronide or sulfate for excretion via the bile or urine, respectively (Neal et al. 1982; Olson and Bittner 1983, ***Cited in ATSDR 1990a***). The hydroxylation of several different PCDDs in the rat was postulated to involve formation of arene oxide intermediates (EPA 1985a). In rats, the metabolism of TCDD was inducible but relatively slow, about four orders of magnitude slower than the metabolism of benzo(a)pyrene. There was considerable species variation in the rate of metabolism of TCDD.

Studies with [^{14}C],-2,3,7,8-TCDD showed that fecal excretion accounted for 39 to 99 percent of the total (fecal and urinary) excretion of radioactivity (EPA 1985a). Elimination half-lives (assuming first order kinetics) ranged from 11 to 30 days, inversely correlated with species sensitivity to TCDD.

There was considerable interspecies variation in the relative importance of fecal versus urinary excretion and in the elimination half-lives.

Noncarcinogenic Toxicity

The only effect in humans clearly attributable to TCDD was chloracne (ATSDR 1989b). The available data, however, also associated exposure to TCDD with hepatotoxicity and neurotoxicity in humans. In animals, TCDD toxicity is most commonly manifested as a wasting syndrome with thymic atrophy terminating in death, with a large number of organ systems showing nonspecific effects. Chronic treatment of animals with TCDD or a mixture of two isomers of hexachlorodibenzo-p-dioxin resulted in liver damage. Immunologic effects may be among the more sensitive endpoints of exposure to the PCDDs in animals. TCDD is a developmental and reproductive toxicant in animal models. Data were not located regarding the noncarcinogenic toxicity of unsubstituted dibenzofuran or the other PCDFs. No verified or provisional noncarcinogenic toxicity values were located for any of the chemicals of concern in these classes (EPA 1992b, 1992c).

Carcinogenicity

~~The EPA (1992b) has verified dibenzofuran as a cancer weight of evidence Group D compound (not classifiable as to carcinogenicity to humans), based on a lack of cancer data in humans or animals.~~ Data regarding the humans carcinogenicity of TCDD obtained from epidemiologic studies of workers exposed to pesticides or to other chlorinated chemicals known to be contaminated with TCDD, are conflicting (ATSDR 1989b). The interpretation of these studies is clouded, because exposure to TCDD was not quantified, multiple routes of exposure (dermal, inhalation, oral) were involved, and the workers were exposed to other potentially carcinogenic compounds. TCDD, however, is clearly carcinogenic in animal models, inducing thyroid, lung, and liver tumors in orally treated rats and mice (EPA 1985a). Similarly, oral treatment with a mixture of two hexachlorodibenzo-p-dioxin isomers induced liver tumors in rats and mice. On the basis of the animal data, TCDD and the hexachlorodibenzo-p-dioxins were assigned to EPA cancer weight-of-evidence Group B2 (probable human carcinogen). Although the PCDDs and PCDFs of concern were not classified, they are treated as probable human carcinogens, for which slope factors are derived.

The EPA (1992b) has presented provisional oral and inhalation slope factors for TCDD of 150,000 per mg/kg/day, based on the incidence of liver and lung tumors in an oral study in rats (Kociba et al. 1978). In the absence of satisfactory congener-specific cancer data, the EPA (1989g) derived toxicity

equivalency factors (TEFs) for the other PCDDs and PCDFs, by assuming that all manifestations of toxicity for all members of these classes are mediated by a common mechanism (i.e., binding to the intraculluar AH receptor of target cells). For polychlorinated dibenzo-p-dioxin and polychlorinated dibenzofurans; 2,3,7,8-TCDD toxicity equivalents will be calculated using the appropriate 1-TEFs/89 Toxicity Equivalent Factors (EPA 1989g). Table B.II.2-10-1 presents the TEFs developed by EPA.

Considerable uncertainty surrounds the carcinogenic potential of the PCDDs and PCDFs of concern. Although TCDD is classified as a weight-of-evidence Group B2 substance, the homologues of concern are not classified. The appropriateness of estimating cancer potency of (i.e., regulating as carcinogens) compounds not assigned to a cancer weight-of-evidence group is questionable (EPA 1986b).

TABLE B.II.1-10-1

DIOXIN AND FURAN TOXICITY EQUIVALENCY FACTORS

Compound	TEF
Dioxins	
2,3,7,8-Heptachlorodibenzo-p-dioxin (HpCDD)	0.01
Other HpCDDs	0
Octachlorodibenzo-p-dioxin (OCDD)	0.001
Furans	
2,3,7,8-Tetrachlorodibenzo-p-furan (TCDF)	0.1
Other TCDFs	0
2,3,7,8-Heptachlorodibenzo-p-furans (HpCDFs)	0.01
Other HpCDFs	0

SOURCE: EPA 1989h

There is uncertainty about the slope factor for TCDD. Additional uncertainty is introduced by the use of the TEFs themselves, most of which were derived not from cancer data, but from in vitro data such as enzyme induction, which is only hypothetically related to a carcinogenic role. For example, the TEF of 0.001 for octachlorodibenzo-p-dioxins (OCDDs) and octachlorodibenzofurans (OCDFs) is based on the appearance of "dioxin-like" effects and detectable levels of OCDD late in a 13-week study of male rats treated with OCDD (Couture et al. 1988) and on in vitro evidence of enzyme

induction (EPA 1989g). Before the Couture et al. (1988), paper was available, the TEF for these homologues, based on limited in vivo and in vitro data, was 0.0.

B.II.2.11 Endosulfan/Endosulfan Sulfate

Toxicity

No acute inhalation MRL was derived for endosulfan based on animal data because the most sensitive effects observed after acute inhalation exposure were trembling and ataxia in rats exposed to 2.6 mg/m^3 for four hours (Hoechst, 1983a, *Cited in ATSDR 1991b*). These effects are considered by ATSDR to be serious effects, and MRLs are not derived using NOAELs or LOAELs for serious end points. No acute-, intermediate-, or chronic-duration dermal MRLs were derived for endosulfan because of the lack of an appropriate methodology for the development of dermal MRLs. No acute-duration oral MRL was derived for endosulfan because no suitable end point was available among the reliable acute-duration studies. The lowest LOAEL was for a serious end point [1.8 mg/kg-day, for convulsions in pregnant rabbits appearing 10 days after the start of daily gavage dosing in the FMC (1981, *Cited in ATSDR 1991b)* study]. The clinical signs common to both humans and animals after acute exposure to high doses of endosulfan (e.g., hyperactivity, tremors, decreased respiration, dyspnea, salivation, tonic-clonic convulsions, and death) point to the nervous system as the major target of toxicity. Target organs of endosulfan identified in experimental animals but not humans include the gastrointestinal tract, blood, liver, kidney, reproductive organs, and immune system. Effects observed on the respiratory and cardiovascular systems are most likely secondary to effects of endosulfan on the central nervous system control of respiratory and cardiovascular function. Very few studies have examined the toxicity of endosulfan following inhalation or dermal exposure in humans or animals, but the effects reported (e.g., central nervous system stimulation and hepatic and renal effects) are similar to those seen after oral exposure. A major metabolite of endosulfan, **endosulfan sulfate**, which is also found at some hazardous waste sites, is reported to have similar toxicity (WHO, 1984, *Cited in ATSDR 1991b*). Endosulfan has been fatal to humans following accidental and intentional ingestion of concentrated endosulfan solutions (Bernardelli and Gennari, 1987; Demeter and Heyndrickx, 1978; Terziev et al., 1974, *Cited in ATSDR 1991b*). Death has also been observed in animals following inhalation (Hoechst, 1983a, *Cited in ATSDR 1991b*), oral (Boyd and Dobos, 1969; Boyd et al., 1970; Chatterjee et al., 1986; FMC, 1958; 1980a, 1980b; Gupta et al., 1978, 1981; Hoechst. 1966a, 1966b, 1970, 1975, 1988a, *Cited in ATSDR 1991b*), and dermal (Gupta and Chandra, 1975; Hoechst, 1989b; Nicholson and Cooper, 1977, *Cited in ATSDR 1991b*) exposure to endosulfan, but no such cases have been reported in humans following inhalation or

No. 48

dermal exposures. Death in humans and animals is generally attributed to respiratory arrest following convulsive seizures. Endosulfan is not readily

water soluble. The oral LD_{50} values reported for technical-grade endosulfan vary depending on the species, sex, formulation tested, vehicle used, and nutritional status of the animal (Boyd and Dobos, 1969; Boyd et al., 1970; Gupta, 1976; Gupta and Gupta, 1979; Hoechst, 1990, WHO, 1984, ***Cited in ATSDR 1991b***). Outward signs of acute endosulfan toxicity are similar among species and are generally associated with endosulfan's effects on the central nervous system. Symptoms include hyperexcitability, dyspnea, decreased respiration, and fine tremors followed by tonic-clonic convulsions. Mice generally appear to be more sensitive to the lethal effects of endosulfan than rats (Gupta, 1976; Gupta et al., 1981, ***Cited in ATSDR 1991b***). Female rats are more sensitive to the lethal effects of endosulfan than male rats (Gupta, 1976; Hoechst, 1990, ***Cited in ATSDR 1991b***). Cardiovascular effects, such as tachycardia and hypertension, followed by cardiogenic shock, increased cardiac output, and an increase in total peripheral resistance, have been observed in humans and animals following acute, high-level exposure to endosulfan (Anand et al., 1980a, 1981; Shemesh et al., 1988, ***Cited in ATSDR 1991b***). Systemic congestion consistent with acute heart failure has been observed in short-term, high-dose studies (Gupta and Chandra, 1977; Hoechst, 1970, ***Cited in ATSDR 1991b***). These effects are only seen at doses that evoke convulsions, indicating that the cardiovascular effects are a result of increased central sympathetic nervous system activity. Gagging, vomiting, and/or diarrhea in humans and animals have been reported following acute, high-level oral exposure to endosulfan (FMC, 1958, 1959a; Hoechst, 1989b; Terziev et al., 1974, ***Cited in ATSDR 1991b***). There have been no reports of renal toxicity associated with acute inhalation exposure to endosulfan in laboratory animals. Acute oral and dermal exposure to endosulfan has been reported to cause damage to the kidneys of rats, rabbits, and dogs (FMC, 1958, 1980a; Gupta and Chandra, 1975; Hoechst, 1970; Terziev et al., 1974, ***Cited in ATSDR 1991b***). The most prominent signs of acute exposure to high concentration of endosulfan in humans are hyperactivity, tremors, decreased respiration, dyspnea, salivation, and tonic-clonic convulsions. These effects have been observed in cases of occupational overexposure as well as following intentional or accidental ingestion of large amount of endosulfan. Autopsies performed in three cases of lethal exposure to endosulfan in humans revealed brain edema (Terziev et al., 1974, ***Cited in ATSDR 1991b***). Long-term brain damage has also been associated with occupational endosulfan intoxicant (Aleksandrowicz, 1979, ***Cited in ATSDR 1991b***). The brain damage may have been a result of a direct action of endosulfan on the brain tissue or the hypoxia that accompanied seizures. Signs of acute endosulfan intoxication similar to those reported in humans have been observed in animals. Cerebral congestion and edema is often observed at necropsy in animals that die following acute ingestion of endosulfan (Boyd and Dobos, 1969; Boyd et al., 1970; Teziev et al., 1974, ***Cited in ATSDR 1991b***).

No. 48

Carcinogenicity

No reports of cancer in humans associated with exposure to endosulfan have been found. The later
No. 48 studies by Hoechst (1988b, 1989a, ***Cited in ATSDR 1991b***) show no evidence of increased neoplasms in rats or mice chronically exposed to endosulfan. Consumption of 3.8 mg/kg-day (females) or 2.9 mg/kg-day (males) by Sprague-Dawley rats for 2 years did not result in an increased incidence of any neoplastic lesion (Hoechst, 1989a, ***Cited in ATSDR 1991b***).

B.II.2.12 Ethylbenzene

Toxicity

Toxicity data specific to 1,2-diethylbenzene could not be located, however, data for ethylbenzene are presented. Ethylbenzene is toxic to both humans and laboratory animals. Clinical observations in humans and observations in animals indicate that the primary symptoms resulting from acute exposure to ethylbenzene are manifested as neurological and respiratory depression and eye and throat irritation. Target organs of ethylbenzene toxicity, identified in animals but not in humans, may be the liver, kidney, and hematopoietic system. The exposure route of most concern to the general public would be low-level inhalation exposure over long periods of time. This is due to the direct release of ethylbenzene into the air by burning of fossil fuels or industrial processes and partitioning into the air from other media (e.g., soil, surface water). No deaths have been reported in humans following ethylbenzene exposure, but death has occurred in laboratory animals following acute exposure to high levels of ethylbenzene administered via the inhalation, oral, and dermal routes. The concentrations of ethylbenzene necessary to cause death in animals have been shown to be relatively high (1,200 - 13,367 ppm, inhalation exposure; 4,728 mg/kg-day, oral exposure; 15,415 mg ethylbenzene/kg body weight, dermal exposure). The principal effect in humans exposed via inhalation to high concentrations of ethylbenzene has been central nervous system toxicity (dizziness, vertigo) (Yant et al., 1930). There is considerable likelihood that human populations acutely exposed to high concentrations of ethylbenzene are at risk for developing neurological effects.

Carcinogenicity

No association between increased cancer incidence in humans and exposure to ethylbenzene has been reported in current literature. The only chronic bioassay located in the literature showed a significant increase in tumors in rats orally exposed to ethylbenzene (Maltoni et al., 1985, ***Cited in ATSDR 1993***). These results; however, are inconclusive given the weakness of the study. In the 1989

48 Integrated Risk Information System (~~IRIS~~ *EPA*, 1989) database, EPA has classified ethylbenzene as a Group D agent (Not Classifiable

as to Carcinogenicity). No potency factor (q_1*) or other quantitative estimate of carcinogenicity has been developed by EPA for ethylbenzene.

B.II.2.13 Lead

Noncarcinogenic Toxicity

The noncarcinogenic toxicity of lead has been well characterized through decades of medical
No. 48 observation and scientific research (EPA 1993~~a~~ *d*). The primary effects of long-term exposure to levels expected to be encountered in the environment are neurological and hematological. Some of the effects on the blood, particularly changes in levels of certain blood enzymes, and subtle neurobehavioral changes in children appear to occur at levels so low as to be considered nonthreshold effects. In part for this reason the RfD/RfC Work Group considered inappropriate the derivation of an RfC or RfD for inhalation exposure, or an RfD for oral exposure (EPA 1993~~a~~ *d*). The principal target organs of lead are the central nervous system and the hematopoietic system.

The EPA has developed an uptake/biokinetic model to predict blood lead levels in populations exposed to lead in air, diet, drinking water, indoor dust, soil and paint. This makes it possible to evaluate the effects of regulatory decisions concerning each medium on blood lead levels and potential health effects. The model is used to estimate lead uptake and subsequent blood lead levels in young children, who are the most sensitive subpopulation for exposure to lead. It accepts user input of variables pertaining to site-specific exposure to lead through air, diet, water, soil, dust, and paint (EPA 1990h). In the absence of data on site-specific residential exposure variables, this model is not applicable to Operable Unit 2.

OSWER Directive No. 9355.4-02 (EPA 1989g) established a soil cleanup level for lead of 500 to 1000 ppm, based on recommendations by the Centers for Disease Control designed to protect children from blood lead concentrations above background, which are associated with lead-induced neurological effects. In the absence of current measures of residential exposure and other site-specific variables, the OSWER directive (EPA 1989g) appears to be the soundest and most defensible basis for evaluating the toxicity of exposure to lead in soil.

Carcinogenicity

Lead is assigned to cancer weight-of-evidence Group B2 (probable human carcinogen), based on inadequate human evidence but sufficient animal evidence (EPA 1993~~a~~ *d*). Rat and mouse bioassays

have shown statistically significant increases in renal tumors following dietary and subcutaneous exposure to several soluble lead salts. The EPA has declined to quantitatively estimate risk for oral exposure to lead because many factors (i.e., age, general health, nutritional status, existing body burden, and duration of exposure) influence the bioavailability of ingested lead, introducing a great deal of uncertainty into any estimate of risk.

B.II.2.14 Polycyclic Aromatic Hydrocarbons

Toxicity

A single exposure to PAHs has been associated with a number of toxic effects, including initiation of carcinogenicity. The acute lethal toxicity of PAHs ranges from 250 mg/kg for the most potent to 700 mg/kg for the least potent. However, most exposure situations will involve a mixture of PAHs; and, it is not possible to tell whether the acute lethal toxicity for a mixture will lie somewhere in between these values or whether toxicity will be additive. In addition, these data were obtained following parenteral administration. a step which by-passes metabolism in the liver; therefore, their relevance to human exposure is questionable.

Carboxylesterase activity of the intestinal mucosa was decreased in rats following intragastric administration of 50 or 150 mg/kg/day benzo(a)anthracene or benzo(a)pyrene for 4 days; enzyme activity was increased following oral exposure to 100 mg/kg/day of anthracene or phenanthrene
No. 48 (Nousiainen et al., 1984 cited in ATSDR, 1990*d*).

Bone marrow depression (aplastic anemia and pancytopenia) leading to death was observed in mice whose AHH enzyme was not inducible following oral administration of 120 mg benzo(a)pyrene/kg/day for 180 days (Robinison et al., 1975 cited in ATSDR, 1990*d*).

A number of hepatic effects (enzyme and foci induction, liver regeneration and increased weights) have been observed in animals administered PAHs. These effects are not life-threatening but may precede the onset of more serious effects. A single intragastric administration of 200 mg/kg of benzo(a)pyrene, benzo(a)anthracene or dibenz(a,h)anthracene induced the formation of preneoplastic hepatocytes in a promotion/initiation bioassay in partially hepatectomized rats fed 2-acetylaminofluorene (Tsuda and Farber, 1980 cited in ATSDR, 1990*d*). PAHs stimulate liver regeneration in partially hepatectomized rats following administration in the diet for 10 days. Non-carcinogenic PAHs required higher doses (Gershbein, 1975 cited in ATSDR, 1990*d*).

Dermal exposure to benzo(a)pyrene in humans was associated with epidermal changes indicative of neoplastic proliferation, chronic dermatitis and hyperkeratosis or exacerbation of pre-existing skin lesions (Cottini and Mazzone, 1939; EPA, 1988 cited in ATSDR, 1990*d*). Topical application of PAHs have been associated with adverse effects in animals including skin cancer, effects on sebaceous glands, increased number of skin melanocytes, dermal inflammation, allergic contact hypersensitivity and photosensitization (Bock and Mund, 1958; Iwata et al., 1981 Klemme et al., 1987; Old et al., 1963 and Forbes et al., 1976 cited in ATSDR, 1990*d*).

No. 48

Immunotoxic effects have been observed following dermal and parenteral administration in animals. PAHs that are carcinogenic are also immunosuppressive with the same rank order of potency (ATSDR, 1990*d*). Effects observed have included inhibition of T-cell dependent and independent antibody production and inhibition of lymphocyte mediated immunity, (Blanton et al., 1986; Lyte and Bick, 1985; Whit and Holsapple, 1984; Wojdani et al., 1984 cited in ATSDR, 1990*d*).

There is no information on the developmental effects of exposure to PAHs in humans (ATSDR, 1990*d*).

In animals, in utero exposure to benzo(a)pyrene (10, 40, or 160 mg/kg/day orally during gestation) was associated with reduced mean postnatal pup weight and increased incidence of sterility associated with alterations in gonadal morphology and germ-cell development in male mice (Mackenzie and Angevine, 1981 cited in ATSDR, 1990*d*). An observed increased incidence of stillborns, resorptions and malformations following dietary administration of 120 mg benzo(a)pyrene/kg/day to the dam was associated with the metabolic responsiveness of the offspring and the dams (Legraverend et al., 1984 cited in ATSDR, 1990). Parental administration of a number of PAHs has been associated with a number of developmental effects: stillbirths, increased fetal resorptions, malformations, adverse gonadal histology, decreased fetal survival.

There is no information on the effect of PAH on reproduction in humans (ATSDR, 1990*d*).

Benzo(a)pyrene decreased the percentage of pregnant females at parturition in pregnant CD-1 mice (Mackenzie and Angevine, 1981 cited in ATSDR, 1990*d*) and reduced the incidence of pregnancy in rats (Rigdon and Rennels, 1964 cited in ATSDR *1990d*) but had no effect on fertility of Swiss mice

(Rigdon and Neal, 1965 cited in ATSDR, 1990*d*). Decreased number of corpora lutea, uterine weights and

No. 48

fetal survival and increased resorptions were observed following parenteral administration of benzo(a)pyrene (Swartz and Mattison, 1985; Bui et al., 1986 cited in ATSDR, 1990*d*). The implications of the results obtained following parenteral administration, which by-passes first-pass metabolism of the liver, to human exposure are that adverse effects on reproduction are possible.

A number of PAHs have been tested in numerous in vitro and in vivo genotoxicity studies (ATSDR, 1990*d*). In general, several PAHs demonstrated genotoxic potential that required metabolic activation. Benzo(a)pyrene produced several genotoxic effects: DNA binding/damage, sister chromatic exchange, chromosomal aberration, cell transformation; effects were observed in bacterial and mammalian (both somatic and germ) cells. DNA damage was also observed in human cells. Acenaphthene, acenaphthylene or fluorene were negative for genotoxic effects and anthracene, phenanthrene and pyrene where negative in all but one in vitro test.

Epidemiologic studies of humans exposed to coke-oven and roofing-tar emissions and cigarette smoke have demonstrated an increase in mortality due to lung cancer (Lloyd, 1971; Mazumdar et al., 1975; Redmond et al., 1976; Hammond et al., 1976; cited in ATSDR, 1990*d*). Skin tumors have been reported among individuals exposed to mixtures containing PAHs: scrotal cancer among chimney sweeps and skin cancer following exposure to shade oils (Pott, 1775; Purde and Etlin, 1980 cited in ATSDR, 1990*d*). While these mixtures contain PAHs they also contain a number of other potentially carcinogenic chemicals, tumor promoters, initiators and cocarcinogens. This concomitant exposure prevents making a direct causal relationship to PAHs.

Inhalation, oral and dermal exposure to PAHs have been associated with carcinogenic effects in animals (ATSDR, 1990*d*). These studies suggest that the site of tumor induction is influenced by the route of administration. Following inhalation exposure an increased incidence of respiratory tract tumors was observed. Benign and malignant tumors, adenomas, papillomas, neoplasms, and carcinomas of the lung, alimentary tract (particularly the forestomach), and mammary glands were observed following ingestion of benzo(a)pyrene, benzo(a)anthracene and dibenz(a,h)anthracene by rodents. A dose-responsive increase in the incidence of forestomach papillomas and carcinomas was observed in mice following dietary administration of 33.3 mg benzo(a)pyrene/kg/day for 30 - 197 days (Neal and Rigdon, 1967 cited in ATSDR, 1990*d*). The overall evidence suggests exposure to a PAHs are associated with an increased risk of cancer.

Benzo(a)anthracene, benzo(b)fluoranthene, benzo(a)pyrene, chrysene, dibenz(a,h)anthracene, and indeno(1,2,3-cd)pyrene have been demonstrated to induce skin tumors in mice following dermal exposure (ATSDR, 1990*d*). Benzo(a)pyrene, in particular, is a potent experimental skin carcinogen. It is often used as a positive control in carcinogenesis bioassays. The dose-response relationship of benzo(a)pyrene and skin tumors has been investigated in a number of studies (Cavalieri et al., 1988; Shubik and Porta, 1957; Bingham and Falk, 1969; Wynder and Hoffman, 1959; Warshawsky and Barkley, 1987 cited in ATSDR, 1990*d*). Benzo(a)pyrene has been demonstrated to induce malignant skin tumor at exposures as low as 0.0054 mg/kg/day; however, the solvent and strain of mouse tested will influence the tumorigenic dose (Bingham and Falk, 1969; Warshawsky and Barkley, 1987 cited in ATSDR, 1990*d*).

No. 48

B.II.2.14.1 Pyrene

Mice administered intraperitoneal injections of pyrene on days 1, 8, and 15 of age did not demonstrate a treatment-related increase in tumor incidence (Wislocki et al., 1986 cited in IRIS, ~~2/93~~ ***EPA 1993d***). Pyrene was not positive or inconclusive in mouse skin-painting assays (Badger et al., 1940; Horton and Christian, 1974; Van Duuren and Goldschmidt, 1976; Salaman and Roe, 1956; Scribner, 1973 cited in IRIS, ~~2/93~~ ***EPA 1993d***). Subcutaneous injection of pyrene did not produce tumors in Jackson A mice (Shear and Leiter, 1941 cited in IRIS, ~~2/93~~ ***EPA 1993d***). The EPA has classified pyrene as a class D carcinogen; not classifiable as to human carcinogenicity due to no human data and inadequate data from animal bioassays.

Reference Dose

The US FDA has established as RfD of 3E-2 based on administration of 0, 75, 125, or 250 mg/kg/day pyrene by oral intubation for 13 weeks (EPA, 1989 ~~cited in IRIS~~). Minimal to mild nephropathy (renal tubular pathology and decreased kidney weights) was observed; the dose relationship was moderate. The uncertainty factor was 3000 due to species variability and lack of additional toxicity studies. The overall confidence in the RfD is low due to gaps in the database.

B.II.2.14.2 Benzo(k)fluoranthene

In a lifetime study in female rats, lung implants of 0.65, 3.4, or 17 mg/kg benzo(k)fluoranthene exhibited a dose-related increase in the incidence of epidermoid carcinomas in the lung and thorax. Equivocal incidences of lung adenomas and hepatic adenomas and hepatomas were reported in mice administered intraperitoneal injections of 120 ug benzo(k)fluoranthene/mouse on days 1, 8, 15 of age

(LaVoie et al., 1987 cited in IRIS, ***EPA 1993d***). Benzo(k)fluoranthene was positive in mouse skin-painting assays (Van Duuren et al., 1966; LaVoie et al., 1982; Amin et al., 1985 cited in IRIS, ***EPA 1993d***). Based on these data, EPA has classified benzo(k)fluoranthene as B2 "probable" human carcinogen.

B.II.2.14.3 Benzo(b)fluoranthene

In a lifetime study in female rats, lung implants of 0.4, 1.2, or 4.1 mg/kg benzo(b)fluoranthene exhibited a dose-related increase in the incidence of epidermoid carcinomas and pleomorphic sarcoma in the lung and thorax. Equivocal incidences of lung adenomas and hepatic adenomas and hepatomas were reported in mice administered intraperitoneal injections of 126 μg benzo(b)fluoranthene/mouse on days 1, 8, 15 of age (LaVoie et al., 1987 cited in IRIS, ***EPA 1993d***). Injection site sarcomas were observed in mice administered subcutaneous injections of benzo(b)fluoranthene (2.6 mg total dose) over 2 months (Lacassagne et al., 1963 cited in ATSDR, 1990). Benzo(b)fluoranthene was positive for complete carcinogenesis and initiation in mouse skin-painting assays (Wynder and Hoffmann, 1959; LaVoie et al., 1982; Amin et al., 1985 cited in IRIS, ***EPA 1993d***). Based on these data, EPA has classified benzo(k)fluoranthene as B2 "probable" human carcinogen.

B.II.2.14.4 Benzo(a)pyrene

There are multiple animal studies demonstrating increased incidence of carcinogenic effects following oral, intratracheal, inhalation and dermal administration of benzo(a)pyrene. Benzo(a)pyrene has been shown to be an initiator and a complete carcinogen following dermal application (IARC, 1973 cited in IRIS, ***EPA 1993d***). A dose-responsive increase in squamous cell papillomas and carcinomas of the forestomach was observed following oral administration of 1 - 250 ppm benzo(a)pyrene to rats and hamsters for 197 days (Rigdon and Neal, 1966, 1969 cited in IRIS, ***EPA 1993d***). The incidence of respiratory tract and upper digestive tract tumors were increased following intratracheal instillation or inhalation of benzo(a)pyrene by guinea pigs, hamsters and rats (EPA, 1991 cited in IRIS, ***EPA 1993d***). Inhalation exposure of hamsters to benzo(a)pyrene at 9.5 mg/cubic m/day for 10 weeks was associated with development of tumors of the nasal cavity, larynx, trachea and pharynx. At the next highest dose, 45 mg/m^3/day, neoplasms were also observed in the upper digestive tract. The lowest dosed, 2.2 mg/m^3/day, animals did not develop tumors (Thyssen et al., 1981 cited in IRIS, ***EPA 1993d***). Intraperitoneal and subcutaneous injection of benzo(a)pyrene is associated with injection site tumors (EPA, 1991 cited in IRIS, ***EPA 1993d***). Based on no human data and sufficient animal data

benzo(a)pyrene is classified, B2; probable human carcinogen. EPA has calculated an oral slope factor of 5.8

per(mg/kg)/day and an inhalation slope factor of 6.1 (mg/kg-day)$^{-1}$. These slope factors are utilized in the quantification of risk of all carcinogenic PAHs (~~HEAST FY 1992~~ ***EPA 1992b***).

No. 48

B.II.2.14.5 Acenaphthylene

Dermal application of acenaphthylene (0.25%) did not cause tumor development in a lifetime study in mice (Cook, 1932). While no control was used in this study other PAHs tested did result in skin tumor formation. EPA has classified acenaphthylene as a class D carcinogen; not classifiable as to human carcinogenicity (IRIS, ***EPA 1993d***).

B.II.2.14.6 Phenanthrene

Two skin painting assays were negative for complete carcinogenic activity; 1 out of 5 mouse skin painting assays was positive for initiation (IRIS, ***EPA 1993d***). Tumorigenic activity was not detected following intraperitoneal injection of phenanthrene (0.25 mg total dose) on days 1, 8, and 15 after birth (Buening et al., 1979 cited in IRIS, ***EPA 1993d***). A single subcutaneous injection of 40 ug phenanthrene in albino mice was not overtly tumorigenic (Grant and Roe, 1963 cited in IRIS, ***EPA 1993d***). No tumors were reported in mice receiving a single subcutaneous injection of 5 mg phenanthrene (Steiner 1955 cited in IRIS, ***EPA 1993d***). EPA has classified phenanthrene as a class D carcinogen; not classifiable as to human carcinogenicity.

B.II.2.14.7 Benzo(a)anthracene

Increased incidence of pulmonary tumors and hepatomas was observed mice following oral gavage with 500 mg benzo(a)anthracene/kg/day 3 times/week for 5 weeks (Klein, 1963 cited in IRIS, ***EPA 1993d***). A single gavage dose of 0.5 mg benzo(a)anthracene was not tumorigenic while multiple gavage treatments (8 or 16 over 16 months) resulted in forestomach papillomas (Bock and King, 1959 cited in IRIS, ***EPA 1993d***). Following intraperitoneal injection of benzo(a)anthracene on days 1, 8, and 15 of age (638 ug/mouse total dose) the incidence of liver adenomas or carcinomas was increased in treated male mice while the incidence of pulmonary adenomas or carcinomas was increased in treated females (Wislocki et al., 1986 IRIS, ***EPA 1993d***). Benzo(a)anthracene was positive as a complete carcinogen and as an initiator in mouse skin painting bioassays (IARC, 1973 cited in IRIS, ***EPA 1993d***). Injection site sarcomas were observed following subcutaneous or intramuscular injection of benzo(a)anthracene (Steiner and Falk, 1951; Steiner and Edgecomb, 1952; Klein, 1952 cited in IRIS, ***EPA 1993d***). EPA has classified benzo(a)anthracene as a B2 "probable" human carcinogen.

TABLE B.3.3-5(b)
CURRENT, TRESPASSING YOUTH
INACTIVE FLYASH PILE: SURFACE WATER
Carcinogenic Risk

Radiation Risk

Ingestion/Surface Water					Dermal Contact/Surface Water	Total
Compound	Conc'n (pCi/L)	Intake	SF(o)	Risk		
NP-237	6.71E-01	1.5E+01	2.2E-10	3.2E-09	Not applicable	3.2E-09
PU-238	8.08E-01	1.8E+01	2.2E-10	3.9E-09		3.9E-09
PU-239/240	5.82E-02	1.3E+00	2.3E-10	2.9E-10		2.9E-10
RA-226	3.60E-01	7.9E+00	7.8E-10	6.1E-09		6.1E-09
RA-228	3.63E-01	7.9E+00	1.0E-10	7.9E-10		7.9E-10
SR-90	1.41E-01	3.1E+00	3.6E-11	1.1E-10		1.1E-10
U-234	1.63E+02	3.6E+03	1.6E-11	5.7E-08		5.7E-08
U-235/236	1.01E+01	2.2E+02	1.6E-11	3.5E-09		3.5E-09
U-238	1.60E+02	3.5E+03	2.8E-11	9.8E-08		9.8E-08
			Total Pathway:	1.7E-07	Total Pathway:	

Chemical Risk

Ingestion/Surface Water					Dermal Contact/Surface Water				
Compound	Conc'n (mg/L)	Intake	SF(o)	Risk	Compound	Intake	SF(derm)	Risk	
Arsenic	3.23E-03	6.4E-08	1.8E+00	1.1E-07	Arsenic	9.4E-09	1.8E+00	1.7E-08	1.3E-07
Beryllium	1.56E-04	3.1E-09	4.3E+00	1.3E-08	Beryllium	4.5E-10		1.3E-08	2.7E-08
Lead	1.30E-02	2.6E-07			Lead	1.5E-10			
Dibenzo(a,h)anthracene	2.22E-05	4.4E-10	7.3E+00	3.2E-09	Dibenzo(a,h)anthracene	1.7E-07		3.2E-09	6.4E-09
2-Methylnaphthalene	3.15E-03	6.3E-08			2-Methylnaphthalene	1.3E-06			
U-TOTAL	4.96E-01	9.9E-06			U-TOTAL				
			Total Pathway:	1.3E-07			Total Pathway:	3.4E-08	

For PAHs and Be, dermal carcinogenic risks assumes 1X the oral carcinogenic risk.

Total Rad + Chem 3.0E-07 | Total Rad + Chem 3.4E-08 | *Total:* 3.4E-07

000373

FER\CRU2RI\ABQ\IFPSWTY.XLS\8/31/94; 4:14 PM

FEMP-OU02-6 FINAL
September 6, 1994

5894

Comment No. 43

TABLE B.3.3-5(b)
(continued)
INACTIVE FLYASH PILE: SURFACE WATER
Non-carcinogenic Hazard

Radiation Hazard

Ingestion/Surface Water

Compound	Conc'n (pCi/L)	Intake	RfD(o)	Hazard
NP-237	6.71E-01	1.5E+01		
PU-238	8.08E-01	1.8E+01		
PU-239/240	5.82E-02	1.3E+00		
RA-226	3.60E-01	7.9E+00		
RA-228	3.63E-01	7.9E+00		
SR-90	1.41E-01	3.1E+00		
U-234	1.63E+02	3.6E+03		
U-235/236	1.01E+01	2.2E+02		
U-238	1.60E+02	3.5E+03		
Total Pathway:				

Dermal Contact/Surface Water

Not applicable

Total Pathway:

Total

Chemical Hazard

Ingestion/Surface Water

Compound	Conc'n (mg/L)	Intake	RfD(o)	Hazard
Arsenic	3.23E-03	3.7E-07	3.0E-04	1.2E-03
Beryllium	1.56E-04	1.8E-08	5.0E-03	3.6E-06
Lead	1.30E-02	1.5E-06		
Dibenzo(a,h)anthracene	2.22E-05	2.6E-09		
2-Methylnaphthalene	3.15E-03	3.7E-07		
U-TOTAL	4.96E-01	5.8E-05	3.0E-03	1.9E-02
Total Pathway:				2.0E-02
Total Rad + Chem				2.0E-02

Dermal Contact/Surface Water

Compound	Intake	RfD(derm)	Hazard	
Arsenic	5.5E-08	2.9E-04	1.9E-04	1.4E-03
Beryllium	2.7E-09	5.0E-05	5.3E-05	5.7E-05
Lead	8.8E-10			
Dibenzo(a,h)anthracene	1.0E-06			
2-Methylnaphthalene	7.6E-06			
U-TOTAL	8.4E-06	1.5E-04	5.6E-02	7.5E-02
Total Pathway:			5.6E-02	
Total Rad + Chem			5.6E-02	*Total:* 7.7E-02

FER\CRU2RI\ABQ\IFPSWTY.XLS\8/31/94; 4:14 PM

APPENDIX B REFERENCES

Abbatt, J.D., 1973, "Human Leukemic Risk Data Derived from Portuguese Thorotrast Experience," Radionuclide Carcinogenesis, CONF-72055, C.D. Sander, R.H. Busch, J.E. Ballou, and J.E. Mahlum, eds., U.S. Atomic Energy Commission, Washington, DC., pp. 451-464.

No. 48 ***ATSDR (Agency for Toxic Substances and Disease Registry), 1991a "Toxicological Profile for 2,3,7,8-Tetrachlorodibenzo-p-dioxin," U.S. Public Health Services, Atlanta, GA.***

No. B-4, *48* Andelman, J.B., 1990*a*, "Total Exposure to Volatile Organic Chemicals in Potable Water," N.M. Ram, R.F. Christman, K.P. Cantor, eds., Lewis Publishers, Chelsea, MI.

ATSDR (Agency for Toxic Substances and Disease Registry), 1990, " Toxicological Profile for 2,3,7,8 - Tetrachlorodibenzo-p-dioxin," draft for Public Comment, U. S. Public Health Service, Atlanta, Georgia.

No. B-106 *48* ATSDR (Agency for Toxic Substances and Disease Registry), 1990*b*, "Toxicological Profile for Acrylonitrile," U.S. Public Health Services, Atlanta, GA.

ATSDR (Agency for Toxic Substances and Disease Registry), 1990*c*, "Toxicological profile for Ethylbenzene, "U.S. Public Health Services, Atlanta, GA.

ATSDR (Agency for Toxic Substances and Disease Registry), 1990*d*, "Toxicological Profile for Polyaromatic Hydrocarbons," U.S. Public Health Services, Atlanta, GA.

ATSDR (Agency for Toxic Substances and Disease Registry), 1990*e*, "Toxicological Profile for Naphthalene and 2-Methylnaphthalene," U.S. Public Health Service, Atlanta, GA.

ATSDR (Agency for Toxic Substances and Disease Registry), 1990*f*, " Toxicological Profile for Radon," U. S. Public Health Service, Atlanta, GA.

No. 48 ***ATSDR (Agency for Toxic Substances and Disease Registry), 1991a "Toxicological Profile for Antimony," U.S. Public Health Services, Atlanta, GA.***

ATSDR (Agency for Toxic Substances and Disease Registry), 1991b "Toxicological Profile for Endosulfan," U.S. Public Health Services, Atlanta, GA.

ATSDR (Agency for Toxic Substances and Disease Registry), 1992a "Toxicological Profile for Selected PCBs (Aroclor-1260, -1254, -1248, -1242, -1232, -1221 and -1016)," U.S. Public Health Services, Atlanta, GA.

ATSDR (Agency for Toxic Substances and Disease Registry), 1992b "Toxicological Profile for Beryllium," U.S. Public Health Services, Atlanta, GA.

ATSDR (Agency for Toxic Substances and Disease Registry), 1992b "Toxicological Profile for Beryllium," U.S. Public Health Services, Atlanta, GA.

ATSDR (Agency for Toxic Substances and Disease Registry), 1993, "Toxicological profile for Ethylbenzene, "U.S. Public Health Services, Atlanta, GA.

No. 48 ***American Conference of Governmental Industrial Hygienists (ACGIH), 1991, "Documentation of the Threshold Limit Values and Biological Exposure Indices," 5th ed., ACGIH, Cincinnati, OH.***

Archer, V. E., J. K. Wagoner, and F. E. Lundlin, 1973, "Cancer Mortality Among Uranium Mill Workers," Journal of Occupational Medicine, Vol. 15, pp. 11-14.

Baes, C. F., III and R. D. Sharp, 1983, "A Proposal for Estimation of Soil Leaching and Leaching Constants for Use in Assessment Models," Journal of Environmental Quality, Vol. 12 pp. 17-28.

Baes, C. F., III, R. D. Sharp, AL. Sjoreen, R.W. Shor, 1984, "A Review and Analysis of Parameters for Assessing Transport of Environmentally Released Radionuclides through Agriculture," U. S. DOE, ORNL-5786.

No. B-108 Bair, W.J., and Thomas, J.M.: Prediction of the health effects of inhaled transuranic elements from experimental animal data. In Transuranium Nuclides in the Environment. International Atomic Energy Agency, Vienna, 1976, pp. 569-85.

No. 48 ***Bensted, J. P. M., 1967, "Experimental Studies in Mice on the Late Effects of Radioactive and Nonradioactive Contrast Media," American New York Academy of Sciences, Vol. 145, pp. 728-733.***

Berlin, M. and B. Rudell, 1979, "Uranium," Handbook on Toxicology of Metals, edited by L. Friberg et al., North-Holland Biomedical Press.

Bureau of Census, 1989, "1987 Census of Agriculture."

Burkart, W.P. Koop, 1988, "Protactinium," Handbook on Toxicity of Inorganic Compounds, H.G. Seiler, H. Sigel, eds., Marcel Dekker, Inc. New York, pp. 551-553.

Clarke, M.J., L. Podbielski, 1988, "Technetium," Handbook on Toxicity of Inorganic Compounds, H.G. Sieler, H. Sigel, A. Sigel, eds., Marcel Dekker, Inc., New York, NY, pp. 665-667.

Clement, 1988, Comparative Potency Approach for Estimating the Cancer Risk Associated with Exposure to Mixtures of Polycyclic Aromatic Hydrocarbons. Interim Final Report. ICF - Clement Association, April, 1988.

Clement International, 1990, "Development of Relative Potency Estimates for PAHs and Hydrocarbon Combustion Product Fractions Compared to Benzo[a]pyrene and Their Use in Carcinogenic Risk Assessments," Prepared for the U.S. EPA, Washington, DC.

No. 48 ***Cookfair, D. L., W. L. Beck, C. Shy, C. C. Lushbaugh, and C. L. Sowder, 1983, "Lung Cancer Among Workers at Uranium Processing Plant," Proceedings of the Health Physics Society, presented at Epidemiology Applied to Health Physics, pp. 398-406.***

48 *Couture, L. A., M. R. Elwell, and L. S. Birnbaum, 1988, "Dioxin-like Effects Observed in Male Rats Following Exposure to Octachlorodibenzo-p-dioxin (OCDD) During a 13-Week Study," Toxicology and Applied Pharmacology, Volume 93, pp. 31-46.*

da Motta, L.C., J. da Silva Horta, and M.H. Tavares, 1979, "Prospective Epidemiological Study of Thorotrast-Exposed Patients in Portugal," Environmental Research, Vol. 18, p. 152-172.

Davie, R. J., I. P. L. Coleman, 1988, "Cesium," Handbook on Toxicity of Inorganic Compounds, H. G. Seiler, H. Sigel, A. Sigel, eds., Macel Dekker, Inc., New York, NY, pp. 217-221.

Durbin, P. W., and M. E. Wrenn, 1975, "Metabolism and Effects of Uranium in Animals," M. E. Wrenn, ed., Conference on Occupational Health Experience with Uranium, ERDA-93, U. S. Energy Research and Development Administration, Washington, D.C., pp. 67-129.

Elinder, C. G., L. Friberg, 1986a, "Antimony," Handbook on the Toxicology of Metals, L. Friberg, G. F. Nordberg, V. B. Vouk, eds., 2nd ed., Volume 2: Specific Metals, Elsevier Science Publishers B.V., New York, NY, pp. 26-42.

Ely, T. S., 1959, "Medical Findings Summary," Symposiums on Occupational Health and Experience and Practices in the Uranium Industry, HASL-58, Office of Technical Services, Deptartment of Commerce, Washington, D.C.

Evans, R. D., 1966, "The effect of Skeletally Deposited Alpha-Ray Emitters in Man," British Journal of Radiology, Vol. 39, pp. 881-895.

Evans, R.D., A.T. Keane, R.J. Kolekow, W.R. Neal, and M.M. Shanahan, 1969, "Radiogenic Tumors and the Radium and Mesothorium Cases Studied at M.I.T.," Delayed Effects of Bond-Seeking Radionuclides. C.W. Mays, W.S.S. Jee, R.D. Lloyd, B.J. Stover, J.H. Dougherty, and G.N. Taylor, eds. University of Utah Press, Salt Lake City, UT, pp. 157-194.

Faber, M., 1973, "Proceedings of the Third International Meeting on the Toxicity of Thorotrast," Riso Report, Danish Atomic Energy Commission, M. Faber, ed., Copenhagen, Denmark, pp. 137-147.

Faber, M., 1977, "Epidemiology of Thorotrast Malignancies in Man," Review paper prepared for the Work Health Organization Scientific Group on the Long-Term Effects of Radium and Thorium in Man, World Health Organization Working Paper 12, World Health Organization, Geneva, Switzerland.

Faber, M., 1978, "Malignancies in Danish Thorotrast Patients," Health Physics, Vol. 35, pp. 154-158.

Faber, M., 1979, "Twenty-Eight Years of Continuous Follow-up of Patients Injected with Thorotrast for Cerebral Angiography," Environmental Research, Vol. 18, pp. 37-43.

Faber, M., 1983, "Current (1981) Status of the Danish Thorotrast Study," Health Physics, Vol. 44, Suppl. 1, pp. 259-260.

Faber, M., 1986, "Observations on the Danish Thorotrast Patients," Strahlentherapie, Vol. 80, pp. 140-142.

No. 48 ***Facchetti, S., A. Formari and M. Montagna, 1980, "Distribution of 2,3,7,8-Tetrachlorodibenzo-p-dioxin in the Tissues of a Person Exposed to the Toxic Clous at Seveso (Italy)," Advances in Mass Spectrometry, Volume 8B, pp. 1405-1414. (Cited in EPA 1985)***

Falk, H., N.C. Telles, K.G. Ishak, L.B. Thomas, and H. Popper, 1979, "Epidemiology of Thorotrast-Induced Hepatic Angiosarcoma in the United States," Environmental Research, Vol. 18. pp. 65-73.

FERMCO, August 26, 1993a. "Fernald Risk Assessment Policy, Guidelines for Determining Contaminants of Potential Concern," Policy Number 93-3, approval August 26, 1993.

Finkel, A.J., C.E. Miller, and R.J. Hasterlik, 1969, "Radium-Induced Malignant Tumors in Man," Delayed Effects of Bone-Seeking Radionuclides, J. Mays, R.D. Lloyd, B.J. Stover, J.H. Dougherty, and G.N. Taylor, eds., University of Utah Press, Salt Lake City, UT, pp. 195-225.

No. 48 ***Fries, G. F., and G. S. Morrow, 1975, "Retention and Excretion of 2,3,7,8-Tetrachlorodibenzo-p-dioxin by Rats," Journal of Agricultural and Food Chemistry, Volume 23, pp. 265-269. (Cited in EPA 1985)***

Gilbert, R.O., 1987, "Statistical Methods for Environmental Pollution Monitoring", Van Nostrand Reinhold, New York, NY.

No. 48 ***Geotrans, Inc., 1987, "Data Input Guide for SWIFT #II, The Sandia Waste Isolation Flow and Transport Model for Fractured Media, Release 2.16, Modifications to NUREG/CR-3162," Geotrans, Herndon, VA.***

Goyer, R. A., 1991, "Toxic Effects on Metals," Casarett and Doull's Toxicology, The Basic Science of Poisons, M. O. Amdur, J. Doull, C. D. Klaasen, eds., 4th ed., Pergamon Press, New York, NY, pp. 623-680.

No. B-108 Hahn, F.F., Boecker, B.B.; Cuddihy R.G.; Hobbs. C.H.; McClellan, R.O.; and Snipes, M.B.: Influence of radiation dose patterns on lung tumor incidence in dogs that inhaled beta emitters: a preliminary report. Radiat. Res., 96:505-17, 1983.

Harting, F.H., and W. Hesse, 1879, "Der Lungenkrebs, die Bergkrankheit in de Schneeberger Gruben," Vierteljahrsschr. f. Gerichtl. Med. u. Offentl. Gensundheitswesen, Vol. 30, pp. 296-309, Vol. 31, pp. 102-132, 313-337.

Helsel D.R. and R. M. Hirsch, 1992, "Statistical Methods in Water Resources," U.S. Geological Survey, Water Resources Division, Reston, VA.

Horta, J. da Silva, M.E. Horta, L.C. da Motta, and M.H. Tavares, 1978, "Malignancies in Portuguese Thorotrast Patients," Health Physics, Vol. 35, pp. 137-152.

Hursh, J. B., W.R. Neuman, T. Toribara, H. Wilson, and C. Waterhouse, 1969, "Ingestion of Uranium by Man," Health Physics, Volume 17, pp. 619-621.

48 *Hursh, J. B. and N. L. Spoor, 1973, "Data on Man," Uranium, Plutonium and the Transuranic Elements, C. H. Hodge, J. N. Stannard and J. B. Hursh, eds.*

International Agency for Research on Cancer (IARC), 1987, IARC Monographs on the Evaluation of Carcinogenic Risks to Humans, Overall Evaluations of Carcinogenicity: An Updating of IARC Monographs, Vols. 1 to 42, Preamble, Supplement 7, WHO: Lyon, France, pp. 17-34.

Jones, T. D. and B. A. Owen, 1989, "Health Risks from Mixtures of Radionuclides and Chemicals in Drinking Water," Oak Ridge National Laboratory, Oak Ridge, TN ORNL-6533.

Kato, Y., T. Mori, and T. Kumatori, 1979, "Thorotrast Dosimetric Study in Japan," Environmental Research, Vol. 18, pp. 32-36.

Kato, Y., T. Mori, and T. Kumatori, 1983, "Estimated Absorbed Dose in Tissues and Radiation Effects in Japanese Thorotrast Patients," Health Physics, Vol. 44, Suppl. 1, pp. 273-279.

No. B-108 Klaassen, C.D., M.O. Amdur, and Doull, J., 1986, Casarett and Doull's Toxicology, the Basic Science of Poisons, 3rd ed., Macmillan Publishing Company, New York.

No. 48 Kociba, R. J., P. A. Keeler, C. N. Park and P. J. Gehring, 1976, "2,3,7,8-Tetrachlorodibenzo-p-dioxin Results of a 13-week Oral Toxicity Study in Rats," Toxicology and Applied Pharmacology, Volume 35, pp. 553-573. (Cited in EPA 1985)

Kociba, R. J., D. G. Keyes, J. E. Bower, et al., 1978, "Results of a Two-year Chronic toxicity and Oncogenicity Study of 2,3,7,8-Tetrachlorodibenzo-p-dioxin in Rats," Jounal of the National Cancer Institute, Volume 46, pp. 279-303. (Cited in EPA 1985, 1992)

Land, C. E. ,1975 Table of confidence limits for linear functions of the normal mean and variance, in Selected Tables in Mathematical Statistics, Vol III, American Mathematical Society, Providence, R. I., pp. 385-419.

No. 48 Leach, L. J., E. A. Maynard, H. C. Hodge, J. K. Scott, C. L. Yuile, G. E. Sylvester, and H. B. Wilson, 1970, "A Five-Year Inhalation Study with Natural Uranium Dioxide (UO_2) Dust - I. Retention and Biologic Effect in the Monkey, Dog and Rat," Health Physics, Vol. 25, pp. 239-258.

Leggett, R. W., 1989, "The Behavior and Chemical Toxicity of U in the Kidney: A Reassessment," Health Physics, Volume 57, No. 3, pp. 365-383.

Leonard, A., 1988, "Ruthenium," Handbook on Toxicity of Inorganic Compounds, H. G. Seiler, H. Sigel and A. Sigel, eds., Macel Dekker, Inc., New York, NY, pp. 571-574.

Luessenhop, A. J., J. C. Gallimore, W. H. Sweet, E. G. Struxness, and J. Robinson, 1958, "The Toxicity in Man of Hexavalent Uranium Following Intravenous Administration," American Jounral of Roentgenology, volume 79, pp. 83-100.

Lymon et al. 1982. Handbook of Chemical Property Estimation Methods.

Lyman, W. J., W. F. Recall, D. H. Rosenblatt, 1990, Handbook of Chemical Property Estimation Methods, American Chemical

Marshall, J. H., and P.G. Groer, 1977, "A Theory of the Induction of Bone Cancer by Alpha Radiation," Radiation Research, Vol. 71. 149-192.

Martland, H. S. 1931, "The Occurrence of Malignancy in Radioactive Persons," American Journal of Cancer, Vol. 15, pp. 2435-2516.

Martland, H. S. 1939, "Occupational Tumors, Bones," Encyclopedia of Health and Hygiene, International Labor Organization, Geneva, Switzerland.

No. 48 ***Maynard, E. A., and H. C. Hodge, 1979, "Studies of the Toxicity of Various Uranium Compounds When Fed to Experimental Animals," The Pharmacology and Toxicology of Uranium Compounds, C. Voegtlin and H. C. Hodge, eds., Volume I.***

Mays, C. W., R. E. Rowland, and A. F. Stehney, 1985, "Cancer Risk from the Lifetime Intake of Radium and Uranium Isotopes," Health Physics, Volume 48, pp. 635-647.

Mays, C. W., and R.D. Lloyd, 1972, "Bone Sarcoma Incidence vs. Alpha Particle Dose," Radiobiology of Plutonium, B.J. Stover and W.S.S. Jee, eds., The J. W. Press, Salt Lake City, UT, pp. 409-430.

No. B-108 McClellan, R.O.; Boyd, H.A.; Gallegos, A.F.; and Thomas, R.G. Retention and distribution of ^{224}Cm following inhalation of $^{244}CmCl_3$ and ^{244}CmO by beagle dogs. Health Phys., 22:877-85, 1972.

No. 48 ***Miller, S. E., D. A. Holiday, and H. N. Doyle, 1956, "Health Protection of Uranium Miners and Millers," Archives of Industrial Health, Vol. 15, pp. 48-55.***

Moore, J. A., M. W. Harris and P. W. Albro, 1976, "Tissue Distrubution of (^{14}C)tetrachlorodibenzo-p-dioxin in Pregnant and Neonatal Rats," Toxicology and Applied Pharmacology, Volume 37, pp. 146-149. (Cited in EPA 1985)

Mori, T., Y. Kato, T. Shimamine, and S. Watanabe, 1979a, "Statistical Analysis of Japanese Thorotrast-Administered Autopsy Cases," Environmental Research, International Meeting on the Toxicity of Thorotrast and Other Alpha-Emitting Heavy Elements, Lisbon, Portugal, Vol. 18, pp. 231-244.

Mori, T., Y. Kato, T. Maruyama, and S. Takahashi, 1979b, "Epidemiological Follow-up Study of Japanese Thorotrast Cases," Environmental Research, Vol. 18, pp. 44-54.

Mori, T., Y. Kato, T. Kumatori, S. Hatakeyama, and T. Maruyama, 1983, "Epidemiological Follow-up Study of Japanese Thorotrast Cases - 1980," Health Physics, Vol. 44, Suppl. 1, pp. 261-272.

Mori, T., Y. Kato, T. Kumatori, S. Hatakeyama, T. Maruyama, R. Kamiyama, W. Mori, H. Irie, and S. Iwata, 1986, "Present Status of Medical Study on Thorotrast-Administered Patients in Japan," Strahlentherapie, Vol. 80, pp. 123-134.

National Academy of Sciences (NAS), 1984, "Toxicity Testing: Strategies to Determine Needs and Priorities," National Academy Press, Washington, D.C.

National Academy of Sciences (NAS), 1988, "Committee on the Biological Effects of Ionizing Radiations (BEIR V), Health Risks of Radon and Other Internally Deposited Alpha-Emitters," National Academy of Sciences, National Academy Press, Washington, D.C.

National Academy of Sciences (NAS), 1990, "Committee on the Biological Effects of Ionizing Radiation (BEIR V), Health Effects of Exposure to Low Levels of Ionizing Radiation," National Academy Press, Washington, D.C.

National Council on Radiation Protection and Measurements (NCRP), 1984a, "Exposure from the Uranium Series with Emphasis on Radon and its Daughters," NCRP Report No. 77.

National Council on Radiation Protection and Measurements (NCRP), 1984b, "Evaluation of Occupational and Environmental Exposures to Radon and Radon Daughters in the United States," NCRP Report No. 78.

National Council on Radiation Protection and Measurements (NCRP), 1984c, "Radiological Assessment: Predicting the Transport, Bioaccumulation, and Uptake by Man of Radionuclides Released to the Environment," NCRP Report No. 76.

No. 48 ***National Council on Radiation Protection and Measurements (NCRP), 1988, "Neptunium Radiation Protection Guidelines," NCRP Report No. 90.***

National Council on Radiation Protection and Measurements (NCRP), 1989, "Screening Techniques for Determining Compliance with Environmental Standards," NCRP Commentary No. 3, National Council on Radiation Protection and Measurements, Washington, DC.

Nau, H. and R. Bass, 1981, "Transfer of 2,3,7,8-Tetrachlorodibenzo-p-dioxin (TCDD) to the Mouse EMbryo and Fetus," Toxicology, Volume 20, pp. 299-308. (Cited in EPA 1985)

Nolan, R. J., F. A. Smith and J. G. Hefner, 1979, "Elimination and Tissue Distribution of 2,3,7,8-Tetrachlorodibenzo-p-dioxin (TCDD) in Female Guinea Pigs Following a Single Oral Dose," Toxicology and Applied Pharmacology, Volume 48, pp. JA162. (Cited in EPA 1985)

Olson, J. R., and W. E. Bitner, 1983, "Comparative Metabolism and Elimination of 2,3,7,8-Tetrachlorodibenzo-p-dioxin, Toxicologist, Volume 3, pp. 103. (Cited in EPA 1985)

Piper, W. N., R. Q. Rose and P. J. Gehring, 1973, "Excretion and Tissue Distribution of 2,3,7,8-Tetrachlorodibenzo-p-dioxin in the Rat," Environmental Health Perspectives, Volume 5, pp. 241-244. (Cited in EPA 1985)

Poiger, H. and C. Schlatter, 1979, "Biological Degradation of TCDD in Rats," Nature, Volume 281, pp. 706-707. (Cited in EPA 1985)

Poiger, H. and C. Schlatter, 1980, "Influence of Solvents and Adsorbents on Dermal and Intestinal Absorption of TCDD," Food Cosmet. Toxicol, Vol. 18, pp. 477-481. (Cited in EPA 1985)

Polednak, A.P., 1978, "Bone Cancer Among Female Radium Dial Workers-Latency Periods and Incidence Rates by Time After Exposure," Journal of the National Cancer Institute, Vol. 60, pp. 77-82.

Polednak, A.P., and E.L. Frome, 1986, "Mortality Among Men Employed Between 1943 and 1947 at a Uranium Processing Plant," Journal of Occupational Medicine, Vol. 23, pp. 169-178.

No. 48 ***Reeves, A. L., 1986, "Barium," Handbook on the Toxicology of Metals, L. Friberg, G. F. Nordberg, V. B. Vouk, eds., 2nd ed., Volume 2: Specific Metals, Elsevier Science Publishers B. V., New York, NY, pp. 84-94.***

Reidel, W., R. Hirschberg, A. Kaul, S. Schmier, and U. Walter, 1979, "Comparative Investigations on the Biokinetics of Colloidal Thorium, Zirconium, and Nafnium Dioxides in Animals," Environmental Research, Vol. 18, pp. 127-139.

Reidel, W., W. Dalheimer, A. Said, and U. Walter, 1983, "Recent Results of the Physical and Biological Properties of Thorotrast Equivalent Colloids," Health Physics, Vol. 44, Suppl. 1, pp. 293-298.

Rockstroh, H., 1959, "Zur Atiologi des Bronchialkrebses in Arsen Verarbeitenden Nickelhutten. Beitrag zur Syncarcinogenese des Berufkrebes," Arch. Geschwulstforsch, Vol. 14, pp. 151-162.

Rose, J. Q., J. C. Ramsey, T. H. Wentzler, R. A. Hummel, and P. J. Gehring, 1975, "The Fate of 2,3,7,8-Tetrachlorodibenzo-p-dioxin Following Single and Repeated Oral Doses to the Rat," Toxicology and Applied Pharmacology, Volume 36, pp. 290-226. (Cited in EPA 1985)

Rowland, R.E., and J.E. Farnham, 1969, "The Deposition of Uranium in Bone," Health Physics, Vol. 17, pp. 139-144.

Rowland, R.E., A.T. Keane, and P.M. Failla, 1971, "The Appearance Times of Radium-Induced Malignancies," Radiological Physics Division Annual Report, Report No. ANL-7860, Part II, Argonne National Laboratory, Argonne, IL, pp. 20-22.

Rowland, R.E., A.F. Stehney, and H.F. Lucas, Jr., 1978a, "Dose-Response Relationships for Female Radium Dial Workers," Radiation Research, Vol. 76, pp. 368-383.

Rowland, R.E., A.F. Stehney, A.M. Brues, M.S. Littman, A.T. Keane, B.C. Pattern, and M.M. Shanahan, 1978b, "Current Status of the Study of ^{226}Ra and ^{228}Ra in Humans at the Center for Human Radiobiology," Health Physics, Vol. 35, pp. 159-166.

Rowland, R.E., A.F. Stehney, and H.F. Lucas, 1983, "Dose-Response Relationships for Radium-Induced Bone Sarcomas," Health Physics, Vol, 44, Suppl. 1, pp. 15-31.

Rundo, J., A.T. Keane, H.F. Lucas, R.A. Schlenker, J.H. Stebbings, and A.F. Stehney, 1986, "Current (1984) Status of the Study of 226Ra and ^{228}Ra in Humans at the Center for Human Radiobiology," Radiobiology of Radium and Thorotrast, W. Gossner, G.B. Gerber, U. Hagen, and A. Luz, eds., Urban and Schwarzenberg, Munich, West Germany, pp. 14-21.

Saric, J.A., U.S. Environmental Protection Agency, March 11, 1992, [Letter to J.R. Craig, U.S. DOE, Subject: Draft Final Risk Assessment Work Plan Addendum.]

Saric, J.A., U.S. Environmental Protection Agency, December 2, 1991, [Letter to J.R. Craig, U.S. DOE, Subject: Risk Assessment Work Plan Addendum.]

B-108 Sax, N.I. and R.J. Lewis, Sr. 1989, Dangerous Properties of Industrial Materials, Vol. III, 7nd ed., Van Nostrand Reinhold, New York.

Scala, R.A., 1991, "Risk Assessment," M.O. Amdur, J. Doull, and C.D. Klaassen, eds., Casarett and Doull's Toxicology, the Basic Science of Poisons, 4th ed., Pergamon Press, New York, pp. 985-996.

Schlenker, R. A., 1980, "Dosimetry of Paranasal Sinus and Mastoid Epithelia in Radium-Exposed Humans," Radiological and Environmental Research Division Annual Report, No. ALN-80-115, Part II, Argonne National Laboratory, Argonne, IL, pp. 1-21.

No. B-108 Seiker, H.G. and H. Sigel, 1988, Handbook on Toxicity of Inorganic Compounds, Marcel Dekker, New York.

Sokal, R. R., and R. J. Rohlf, 1981, Biometry, 2nd ed. W. H. Freeman, San Francisco.

Spiers, F.W., H.F. Lucas, J. Rundo, and G.A. Anast, 1983, "Leukemia Incidence in the U.S. Dial Workers," Health Physics, Vol. 44, Suppl. 1, pp. 65-72.

Spiess, H., 1969, "^{224}Ra-Induced Tumors in Children and Adults," Delayed Effects of Bone-Seeking Radionuclides, C. W. Mays, W.S.S. Jee, R.D. Lloyd, B.J. Stover, J. H. Dougherty, and G. N. Taylor, eds., University of Utah Press, Salt Lake City, UT, pp. 227-247.

*48 *Speiss, H., and C. W. Mays, 1970, "Bone Cancers Induced by RA-224 (ThX) in Children and Adults," Health Physics, Vol. 19, pp. 713-729.*

Spiess, H., and C. W. Mays, 1973, "Protraction Effect on Bone Sarcoma Induction of ^{224}Ra in Children and Adults," Radionuclides Carcinogenesis, CONEF-720505, C. L. Sanders, R.H. Bursch, J. E. Ballou, and D.D. Mahlum, eds., NTIS, Springfield, VA, pp. 437-450.

Stebbings, J.H., H.F. Lucas, and A.F. Stehney, 1984, "Mortality from Cancers of Major Sites in Female Radium Dial Workers," American Journal of Industrial Medicine, Vol. 5, pp. 435-459.

Stevens, W., F. W. Bruenger, D. R. Atherton, J. M. Smith, and G. N. Taylor, 1980, "The Distribution and Retention of Hexavalent ^{223}U in the Beagle," Radiation Research, Vol. 83, pp. 109-126.

Stokinger, H. E., 1982, "Uranium," Patty's Industrial Hygiene and Toxicology, Third Edition.

Teitelbaum, P. J., and A. P. Poland, 1978, "Studies of the Hepatic Uptake of 2,3,7,8-Tetrachlorodibenzo-p-dioxin in the Mouse," Procedures of the American Society for Experimental Biology, Volume 37, pp. 692. (Cited in EPA 1985)

Travis, C.C. and Arms, A.D., 1988, "Bioconcentration of Organics in Beef, Milk and Vegetation," Environmental Science & Technology, Vol. 24, No. 10, pp. 1465.

United States Department of Agriculture (USDA), 1985, Report No. 85-1 National Food Consumption Food Survey.

United States Dept. of Energy, 1988, " Work Plan for Conducting the Site-Wide Remedial Investigation and Feasibility Study, Feed Materials Production Center, Fernald, Ohio," U.S. Dept. of Energy, Oak Ridge Operations Office, Oak Ridge, TN.

United States Dept. of Energy, 1992a, "Remedial Investigation and Feasibility Study, Fernald Environmental Management Project, Fernald, Ohio, Risk Assessment Work Plan Addendum," U.S. Dept. of Energy, Fernald Office, Fernald, OH.

United States Dept. of Energy, 1992b, "RCRA/CERCLA Background Soil Study Sampling and Analysis Plan, Fernald Environmental Management Project, Fernald, Ohio, Remedial Investigation and Feasibility Study," U.S. Dept. of Energy, Fernald Office, Fernald, OH.

United States Dept. of Energy, 1992c, "Sitewide Characterization Report, Fernald Environmental Management Project, Fernald, Ohio, Remedial Investigation and Feasibility Study," U.S. Dept. of Energy, Fernald Office, Fernald, OH.

United States Dept. of Energy, 1992d, Responses to U.S. EPA and Ohio EPA Technical Comments on the Site-Wide Characterization Report Response Document, November 1992.

United States Dept. of Energy, 1993a, " Remedial Investigation Report For Operable Unit 1, Fernald Environmental Management Project, Fernald, Ohio, Remedial Investigation and Feasibility Study, Volume 6: Appendix E, Operable Unit 1, Baseline Risk Assessment," U. S. Dept of Energy, Fernald Office, Fernald, OH. August. 1993.

United States Dept. of Energy, 1993b, " Feasibility Study Report For Operable Unit 4, Fernald Environmental Management Project, Fernald, Ohio, Remedial Investigation and Feasibility Study, Appendix B, Baseline Risk Assessment," U. S. Dept of Energy, Fernald Office, Fernald, OH. August, 1993.

United States Dept. of Energy, 1993c, " Feasibility Study Report For Operable Unit 4, Fernald Environmental Management Project, Fernald, Ohio, Remedial Investigation and Feasibility Study, Volume 4 of 4, Comprehensive Response Action Risk Evaluation," U. S. Dept of Energy, Fernald Office, Fernald, OH. September, 1993.

United States Dept. of Energy, 1993d, "Operable Unit 2 Sampling and Analysis Plan," Fernald Environmental Management Project, Fernald, Ohio, U. S. Dept of Energy, Fernald Office, Fernald, Ohio, April, 1993.

United States Dept. of Energy, 1993e, Response to USEPA comments on the Operable Unit 2 RI Report. EPA comments dated 12/17/92. Response dated 2/7/93.

United States Dept. of Energy, 1993f, CERCLA/RCRA Background Soil Study, Fernald Environmental Management Project, Fernald, Ohio, March, 1993.

No. 48 ***United States Dept. of Energy, 1994, "Supplemental Guidance to the Risk Assessment Work Plan Addendum," U.S. Department of Energy, Fernald Field Office, Fernald, Ohio.***

48 United States Environmental Protection Agency, 1980*a*, "Upgrading Environmental Radiation Data," EPA 520/1-80-012, prepared by Health Physics Society Committee Report HPSR-1 (1980), for Office of Radiation Programs, Washington, DC.

United States Environmental Protection Agency, 1980b, "Identification and Listing of Hazardous Waste Under RCRA, Subtitle C, Section 3001," Health and Environmental Effects Profiles, Office of Solid Waste, Washington, DC.

United States Environmental Protection Agency, 1985, "Health Document for Polychlorinated Dibenzo-p-dioxins," EPA/600/8-84/014F, Office of Health and Environmental Assessment, Washinton, DC.

United States Environmental Protection Agency, 1986a, "Superfund Public Health Evaluation Manual (SPHEM)."

United States Environmental Protection Agency, 1986b, "Guidelines for Carcinogen Risk Assessment," Federal Register 51(185), pp. 33992-34003.

United States Environmental Protection Agency, 1988a, Integrated Risk Information System (IRIS)," Computer Database, EPA, Washington DC.

United States Environmental Protection Agency, 1988c, "Superfund Exposure Assessment Manual," EPA/540/1-88/001, EPA, Office of Remedial Response, Washington, DC.

United States Environmental Protection Agency, 1989, Integrated Risk Information System (IRIS)," Computer Database, EPA, Washington DC.

United States Environmental Protection Agency, 1989a, "Risk Assessment Guidance for Superfund: Human Health Evaluation Manual, Part A, Interim Final," EPA/540/1-89/002, EPA, Office of Emergency and Remedial Response, Washington, DC.

No. B-13 United States Environmental Protection Agency, 1989b, Risk Assessment Guidance for Superfund: Human Health Evaluation Manual, Part B, Interim Final, "EPA/540/1-89/002, EPA Office of Emergency and Remedial Response, Washington, DC.

United States Environmental Protection Agency, 1989~~b~~c, "Exposure Factors Handbook," EPA/600/8-89/043, EPA, Office of Health and Environmental Assessment, Washington, DC.

United States Environmental Protection Agency, 1989~~c~~d, "Statistical Methods for Evaluating the Attainment of Cleanup Standards, Volume 1: Soils and Solid Media," EPA/230/02-89-042, Statistical Policy Branch (PM-223), Office of Policy, Planning, and Evaluation, EPA, Washington, DC.

United States Environmental Protection Agency, 1989~~d~~e, "Statistical Analysis of Ground-Water Monitoring Data at RCRA Facilities," EPA/530-SW-89-026, EPA, Office of Solid Waste, Washington, DC.

United States Environmental Protection Agency, 1989~~e~~f, "General Quantitative Risk Assessment Guidelines for Noncancer Health Effects," prepared by the Office of Health and Environmental Assessment for the Risk Assessment Forum, ECAO-CIN-538, Cincinnati, OH

B-40 United States Environmental Protection Agency, 1989g, "Interim Guidance on Establishing Soil Lead Cleanup Levels at Superfund sites," OSWER Structure No. 9355.4-02, September 1989.

No. 48 ***United States Environmental Protection Agency, 1989h, "Interim Procedures for Estimating Risks Associated with Exposures to Mixtures of Chlorinated Dibenzo-p-dioxins and Dibenzofurans (CDDs and CDFs) and 1989 Update," prepared by the Risk Assessment Forum fo the Office of Health and Environmental Assessment, EPA/625/3-89/016, U.S. EPA, Washington, DC.***

United States Environmental Protection Agency, 1989i, "OSWER Directive No. 9355.4-02: Interim Guidance on Establishing Soil Lead Cleanup Levels at Superfund Sites," Memorandum from H.L. Longest II and B. Diamond to the EOA Regional Directors.

United States Environmental Protection Agency, 1989j, "Risk Assessment Methodology Environmental Impact Statement NESHAPS for Radionuclides, Bachground Information Docuemtn - Volume 1," Office of Radiation Programs, EPA/520/1-89/005, U.S. EPA, Washington, DC.

United States Environmental Protection Agency, 1990a, "Statistical Methods for Evaluating the Attainment of Cleanup Standards, Volume 3 (Draft)," EPA, Washington, D.C.

United States Environmental Protection Agency, 1990b, "1989 Update to the Interim Procedures for Estimating Risks Associated with Exposures to Mixtures of Chlorinated Dibenzo-p-Dioxins and - Dibenzofurans (CDDs and CDFs), Part II," EPA, Risk Assessment Forum, Washington, D.C.

United States Environmental Protection Agency, 1990c, Risk Assessment Guidance for Superfund: Vol I - Human Health Evaluation Manual, Supplemental Guidance, "Standard Exposure Factors," Final Draft OSWER Directive 9285-03.

United States Environmental Protection Agency, 1990d, Exposure Factor Handbook, EPA/600/8-89/043.

United States Environmental Protection Agency, 1990e, "1989 Toxicity Equivalency Factors."

No. B-40 United States Environmental Protection Agency (EPA), 1990f, "National Oil and Hazardous Substances Pollution Contingency Plan," Final Rule, FR Vol. 55, No. 46, March 8, 1990, available from U.S. Government printing Office, Washington, D.C.

United States Environmental Protection Agency, 1991a, "Weri Treatability Database."

United States Environmental Protection Agency, 1991ab, "Risk Assessment Guidance for Superfund: Human Health Evaluation Manual, Volume I, Supplemental Guidance, Standard Default Exposure Factors, Interim Final," publication 9285.7-01C, EPA, Office of Emergency and Remedial Response, Washington, D.C.

United States Environmental Protection Agency, 1991c, Drinking Water Criteria Document for Polycyclic Aromatic Hydrocarbons (PAHs), Prepared by the Environmental Criteria and Assessment Office, Cincinnati, OH for the Office of Water, Washington, DC.

United States Environmental Protection Agency (EPA), 1991d, "Risk Assessment Guidance for Superfund, Volume I: Human Health Evaluation Manual, Part B, Development of Risk-Based

Preliminary Remediation Goals, Interim," Publication 9285.7-01B, U.S. EPA Office of Emergency and Remedial Response, Washington, D.C.

No. B-40 United States Environmental Protection Agency, 1991d e, "Update on OSWER Soil Lead Cleanup Guidance," memorandum from D.R. Clay, Office of Solid Waste and Emergency Response, August 1991.

No. 48 ***United States Environmental Protection Agency, 1991f, Standard Deault Exposure Factors (OSWER Directive 9285.6-03.***

United States Environmental Protection Agency, 1991g, "Health Effects Assessment Summary Tables, FY - 1991," OERR 9200.6-303(91-1), U.S. EPA, Washington, DC.

United States Environmental Protection Agency, 1992a, "Integrated Risk Information System (IRIS)," computer database, EPA, Washington, DC.

United States Environmental Protection Agency, 1992b, "Health Effects Assessment Summary Tables, Annual Update FY 1992", including Supplement A, July, 1992, Prepared by the Environmental Criteria and Assessment Office, Cincinnati, OH, for the Office of Emergency and Remedial Response, Washington, DC.

United States Environmental Protection Agency, 1992c, "Guidance on Risk Characterization for Risk Assessors and Risk Managers," Memorandum dated February 26, 1992.

United States Environmental Protection Agency, 1992d, "Guidance for Exposure Assessment; Notice," Federal Register Volume 57, No. 104, pp. 22888-22938.

United States Environmental Protection Agency, 1992e, Comments on Draft Operable Unit 2 RI Report, 12\17\92.

United States Environmental Protection Agency, 1992f, "Dermal Exposure Assessment: Principals and Applications" EPA/600/8-91/011B.

No. B-11 U.S. Environmental Protection Agency, 1992g, "Statistical Support Documentation for 40CFR, Part 503, Final Standards for the Use or Disposal of Sewage Sludge," Volume I, U.S. EPA, Office of Science and Technology, Engineering and Analysis Debiseon, Washington, DC.

United States Environmental Protection Agency, 1993a, Memorandum from J. Dollarhide ECAO to P. Vanleeuwen Region V, 7/21/93.

United States Environmental Protection Agency, 1993b, "Health Effects Assessment Summary Tables, FY - 1993," OERR, EPA, Washington, DC.

United States Environmental Protection Agency, 1993c, "Risk-based Concentration Tables Second Quarter 1993" EPA Region III, May 10.

No. 48 ***United States Environmental Protection Agency (EPA), 1993d, Integrated Risk Information System (IRIS)," Computer Database, EPA, Washington, DC.***

8 United States Environmental Protection Agency (EPA), 1993e, Memorandum from J. Dollaride, ECAO, to P. Van Leeuwen, EPA Region V, July 21, 1993, Attachment G: "Review of Position Paper on Proposed Modifications to Soil Cleanup Levels.

United States Environmental Protection Agency (EPA), 1994a, Integrated Risk Information System (IRIS)," Computer Database, EPA, Washington, DC.

No. 48 United States Environmental Protection Agency (EPA), 1994b, "Hazardous Substance Database (HSDB)," computer database, U.S. EPA, Washington, DC.

United States Nuclear Regulatory Commission (NRC), 1977, "Calculation of Annual Doses to Man from Routine Releases of Reactor Effluents for the Purpose of Evaluating Compliance with 10 CFR Part 50, Appendix I: Regulatory Guide 1.109, NRC, Office of Standards Development, Washington, DC.

United States Nuclear Regulatory Commission (NRC), 1984, De Minimus Waste Impacts Analysis Methodology," NEREG/CR-3585.

van Kaick, G., A. Kaul, D. Lorenz, H. Muth, K. Wegener, H. Wesch, 1978a, "Late Effects and Tissue Dose in Thorotrast Patients-Recent Results of the German Thorotrast Study," Late Biological Effects of Ionizing Radiation, International Atomic Energy Agency, Vienna, Austria, Volume 1, pp. 263-276.

van Kaick, G., A. Kaul, D. Lorenz, H. Muth, 1978b, "Malignancies in German Thorotrast Patients and Estimated Tissue Dose," Health Physics, Volume 35, pp. 127-136.

van Kaick, G., H. Muth, A. Kaul, H. Immich, D. Liebermann, D. Lorenz, W.J. Lorenz, H. Luhrs, K.E. Scheer, G. Wagner, K. Wegener, and H. Wesch, 1983, "Recent Results of the German Thorotrast Study - Epidemiological Results and Dose Effect Relationships in Thorotrast Patients," Health Physics, Volume 44, Suppl. 1, pp. 299-306.

van Kaick, G., H. Muth, A. Kaul, H. Immich, D. Liebermann, W.J. Lorenz, D. Lorenz, W.J. Luhrs, K.E. Scheer, G. Wagner, K. Wegener, H. Wesch, 1984a, "Results of the German Thorotrast Study," Radiation Carcinogenesis, Epidemiology and Biological Significance, J.D. Boice, Jr. and J.F. Fraumeni, Jr., eds., Raven, New York.

van Kaick, G., H. Muth, A. Kaul, 1984b, "The German Thorotrast Study," Results of Epidemiological, Clinical and Biophysical Examinations on Radiation-Induced Late Effects in Man Caused by Incorporated Colloidal Thorium Dioxide (Thorotrast), Report No. EUR 9504 EN, Commission of the European Communities, Luxembourg, Germany.

van Kaick, G., H. Muth, A. Kaul, H. Immich, D. Liebermann, W.J. Lorenz, H. Luhrs, K.E. Scheer, G. Wagner, K. Wegener, H. Wesch, 1986, "Report on the German Thorotrast Study," Strahlentherapie, Volume 80, pp. 114-118.

No. 48 Van Miller, J. P. R. J. Marlar, J. R. Allen, 1976, "Tissue Distribution and Excretion of Tritiated Tetrachlorodibenzo-p-dioxin in Non-human Primates and Rats," Food Cosmet. Toxicol, Volume 14, pp. 31-34. (Cited in EPA 1985)

B-38 Verschueren, K., 1983. Handbook of Environmental Data on Organic Chemicals, Van Nostrand Reinhold, New York, p.521.

Wagoner, J. K., V. E. Archer, B. E. Carrol, and D. A. Holaday, 1964, "Cancer Mortality Patterns Amongst U. S. Uranium Miners and Miller, 1950 through 1962," Journal of the National Cancer Institute, Vol. 32, pp. 787-801.

Waxweiler, R. J., V. E. Archer, R. J. Roscoe, A. Watanabe, and J. J. Thun, 1983, "Mortality Patterns Among a Retrospective Cohort of Uranium Mill Workers," Proceedings of the Health Physics Society, presented at Epidemiology Applied to Health Physics, pp. 428-435.

Webster, R.C., H.I. Maibach, D.A. Bucks et. al., 1990, "Percutaneous Absorption and Skin Decontamination of PCBs In Vitro Studies with Human Skin and In Vitro Studies with Rhesus Monkey, "J. of Toxicology and Environmental Health, Vol. 12, pp. 511-519 (Litedin ATSDR 1991).

Wenning, R. N. Kirsch, 1988, "Strontium," Handbook on Toxicity of Inorganic Compounds, H.G. Sieler, H. Sigel, A. Sigel, eds., Marcel Dekker, Inc., New York, NY, pp. 631-638.

Wesch, H., H. Kampmann, and K. Wegener, 1973, "Assessment of Organ Distribution of Thorium by Neutron-Activation-Analysis," Proceedings of the Third International Meeting on the Toxicity of Thorotrast, Riso Report 294, M. Faber, ed., Danish Atomic Energy Commission, Copenhagen, Denmark, pp. 52-60.

Wesch, H., U.W. Riedel, K. Hasenohrl, K. Wegener, A. Kaul, H. Muth, H. Immich, and G. van Kaick, 1983, "Recent Results of the German Thorotrast Study - Statistical Evaluation of Animal Experiments With Regard to the Nonradiation Effect in Human Thorotrastosis," Health Physics, Vol. 44, Suppl. 1, pp. 317-321.

Wesch, H., U.W. Riedel, K. Hasenohrl, K. Wegener, A. Kaul, H. Muth, and G. van Kaick, 1986, "German Thorotrast Study: Results of the Long-Term Animal Studies on the Effect of Incorporated Radioactive and Nonradioactive Particles," Strahlentherapie, Vol. 80, pp. 186-188.

No. 48 ***Wester, R. C., D. A. W. Bucks, H. I. Maibach et al., 1983, "Polychlorinated Biphenyls (PCBs): Dermal Absorption, Systemic Elimination, and Dermal Wash Efficiency," Journal of Toxicology and Environmental Health, Vol. 12, pp. 511-519 (Cited in ATSDR 1991).***

Weston, Inc., Roy F., 1987, Characterization Investigation Study, Volume 3: Radiological Survey of Surface Soils, prepared for the FMPC, Westinghouse Materials Co. of Ohio, Cincinnati, OH.

Williams, G.M. and J.H. Weisburger, 1991, "Chemical Carcinogenesis," M.O. Amdur, J. Doull, and C.D.Klaassen, eds., Casarett and Doull's Toxicology, the Basic Science of Poisons, 4th ed., Pergamon Press, New York, pp. 127-200.22.

Wrenn, M. E., P. W. Durbin, D. L. Wilis, N. P. Singh, 1987, "The Potential Toxicity of U in Water," Journal of the American Water Works Association, Volume 79, pp. 177-184.

Yuile, C. L., 1973, "Animal Experiments (Chapter 3)," Uranium, Plutonium, and the Transuranic Elements, Hodge, Stannard, and Hursh, eds.

48 *Zach, R. and K. R. Mayoh, 1984, "Soil Ingestion by Cattle: A Neglected Pathway," Health Physics, Vol. 46, No. 2, pp. 426-431.*