6145

U-004-451 .2

DRAFT PROJECT SPECIFIC PLAN FOR PHASES I AND II OF THE OPERABLE UNIT 2 PRE-DESIGN FIELD INVESTIGATION - NOVEMBER 7, 1994

11/07/94

DOE-FN 250 REPORT

EPAS

DRAFT

PROJECT SPECIFIC PLAN

FOR PHASES I AND II OF THE

OPERABLE UNIT 2

PRE-DESIGN FIELD INVESTIGATION

FERNALD ENVIRONMENTAL MANAGEMENT PROJECT
FERNALD, OHIO

NOVEMBER 7, 1994

TABLE OF CONTENTS

Section		Page
Table of Contents		i
List of Tables		iv
List of Figures		v
1.0	Introduction	1-1
2.0	Summary of Previous Investigations	2-1
3.0	Data Quality Objectives, QA/QC Requirements, and Sampling Plan	3-1
3.1	Data Quality Objectives	3-1
3.1.1	Purposes of Sampling Effort	3-1
3.1.2	Development of Data Quality Objectives and Sampling Plan	3-1
3.2	Assignment of Existing Analytical DQOs	3-2
3.3	QA/QC Requirements	3-4
3.3.1	Project Requirements for Self-Assessments, Surveillances	3-4
3.3.2	Field QA Samples	3-4
3.3.3	Field Changes to the PSP	3-6
4.0	Organization and Responsibilities	4-1
4.1	Organization	4-1
4.2	Responsibilities	4-1
4.3	Sample Team Organization	4-2
4.3.1	Organizational Structure	4-2
4.3.2	Responsibilities of Team Members	4-4
5.0	Health and Safety Considerations	5-1
5.1	Task Specific Plans	5-1
5.2	Radiological Monitoring and Controls	5-2
5.3	Nonradiological Monitoring and Controls	5-3
6.0	Quality Assurance and Quality Control	6-1
6.1	Field and Laboratory Quality Control Samples	6-1
6.2	Accuracy, Precision, and Sensitivity	6-1
6.3	Completeness, Representativeness, and Comparability	6-2
6.4	Training, Records Administration, and Document Control	6-3

6.5 Performance and System Audits 6-3
7.0 Field Activity Guidelines 7-1
7.1 Field Activity Requirements 7-1
7.2 Field Operations Procedures 7-2
8.0 Field Sampling Plan 8-1
8.1 Sample Type Location and Analysis 8-1
8.2 Field Operations 8-1
8.2.1 Penetrometer Testing 8-1
8.2.1.1 Objectives 8-1
8.2.2 Groundwater Elevations for Inverse Modeling 8-6
8.2.3 Sampling from Soil Boring Locations 8-7
8.2.3.1 Objectives 8-7
8.2.3.2 Soil Sample Collection 8-7
8.2.4 Lysimeter Installation 8-19
8.2.4.1 Objectives 8-19
8.2.4.2 Lysimeter Placement and Installation 8-19
8.2.4.3 Lysimeter Sampling 8-23
8.2.5 New Well Installation 8-25
8.2.5.1 Objectives 8-25
8.2.5.2 Well Installation 8-25
8.2.5.3 Chemical Sampling of Water and Soil from The New Wells 8-25
8.2.5.4 Groundwater Level Measurements from New Wells 8-26
8.2.6 Other Sampling Activities 8-26
8.3 Field Methods 8-26
8.3.1 Cone Penetrometer Testing Method 8-26
8.3.2 Rotasonic™ Drilling and Sampling 8-27
8.3.3 Subsurface Soil Sampling 8-28
8.3.4 Waste Handling/Disposal 8-28
8.3.5 Project Surveying 8-29
8.4 General Sampling Requirements 8-29
8.4.1 Field QC Samples 8-29

8.4.2 Alternate Sampling Procedures 8-30
8.4.3 Sample Equipment and Materials 8-31
8.4.4 Equipment Decontamination 8-31
8.4.5 Sample Volume, Containers and Preservation 8-31
8.4.6 Sample Collection Documentation 8-32
8.4.7 Sample Collection Reports 8-32
8.5 Sample Management 8-33
8.5.1 Sample Identification and Labeling 8-33
8.5.2 Sample Chain of Custody Records and Field Data Documentation 8-33
8.6 Field Equipment Methods 8-33
8.6.1 Calibration of Field Equipment 8-33
8.6.2 Documentation of Calibration 8-35
8.7 Analytes of Interest 8-35
8.8 Laboratory Methods 8-36
8.8.1 Analytical Methods 8-36
8.8.2 K_d Analysis 8-36
8.8.2.1 K_d Sample Preparation 8-39
8.8.2.2 K_d Sample Mixing 8-42
8.8.2.3 K_d Collection of Samples During Testing 8-42
8.8.2.4 Laboratory Performance Requirements 8-43
8.8.3 Laboratory Performance Requirements 8-43
8.9 Sample Analysis and Validation 8-43
9.0 Pre-Design Investigation Schedule 9-1
Attachment I - Pre-Design Data Quality Objectives I-1
Attachment II - Unexpected Discovery of Cultural Resources II-1
Attachment III - TIMCO Lysimeter Manual III-1
Attachment IV - Example Field Forms IV-1
Attachment V - Equipment List V-1
Attachment VI - Type K Expansive Grout VI-1
Attachment VII - Rotasonic™ Drilling VII-1
Attachment VIII - ASTM Specifications/Procedures IX-1

LIST OF TABLES

Table		Page
2-1	Summary of Reports Reviewed During Work Plan Preparation	2-1
2-2	Uncertainty of Kriged Estimates	2-4
3-1	Data Requirements and Proposed Sampling Activity	3-3
3-2	Analytical Support Levels for the Pre-Design Investigation	3-2
3-3	Analytical Support Levels	3-5
7-1	Reference Guidelines	7-3
7-2	Groundwater Sampling Procedures	7-5
7-3	Unsaturated Zone Survey Procedures	7-6
7-4	Geotechnical Surveying Procedures	7-7
7-5	Soil Sampling Procedures	7-8
8-1	Summary Sheet of Soil Samples - Pre-Design Investigation in the Eastern Area	8-2
8-2	Chemical Analyses for Soil and Water Samples	8-4
8-3	Water Level Measurements	8-5
8-4	Proposed Lysimeter Depths	8-7
8-5	Summary of ASTM Procedures	8-8
8-6	Soil Sample Types, Locations and Depths	8-10
8-7	Sample Volume, Containers, and Preservation - Soil Samples	8-16
8-8	Sample Volume, Containers, and Preservation - Water/QA Samples	8-17
8-8a	Proposed Lysimeter Depths	8-22
8-9	Tests to Be Performed For K_d Determination	8-40
8-10	Soil and Water Analysis for K_d Determination	8-41

LIST OF FIGURES

Figure		Page
1-1	Proposed Investigation Area	1-2
4-1	Proposed Organization - Pre-Design Investigation	4-3
8-1	Existing Borings With Proposed Cone Penetrometer, Nested Lysimeter, and Nested Piezometers Sampling Locations	8-20

1.0 INTRODUCTION

The preferred remedial alternative for Operable Unit 2 includes an on-site disposal of remediation material. The design of a disposal facility is required as part of these remedial action plans. Initial screening for an acceptable location for the disposal facility was performed using available environmental sampling data. This data was evaluated by using an uncertainty kriging model to determine if enough data was available to ensure accurate geological predictions. The model results indicated that an unacceptable uncertainty existed in predicting lithologies in the are most suitable for a disposal facility. As a results this Pre-Design Investigation for the location of the on-site disposal facility was developed.

The purpose of the Pre-Design Investigation is to define the most suitable location of the disposal facility within an identified best area at the FEMP based on Operable Units 2 and 5 Remedial Investigation/Feasibility Study (RI/FS) investigations. The identified best area is located on the east side of the FEMP and measures approximately 2000 feet east to west by 5300 feet north to south (see Figure 1-1). This area is considered the best location for an on-site disposal facility primarily based on the greatest amount of gray clay which provides a protective layer over the Great Miami Aquifer. Fate and transport modeling and risk assessments in the Operable Unit 2 Feasibility Study (FS) report have shown that a disposal facility in this area based on a feasible facility design and a 12 foot gray clay layer will be protective of human health and the environment.

The boundary of the study area identified on Figure 1-1 has been bounded on the north, east and south by the OEPA siting requirements (buffer from property line and water supply wells). The west boundary follows the 12 feet of gray clay contour line with the exception of the northern portion of the west boundary line (above the production area), which was made based on identification of sand lenses within the gray clay.

Based on planning meetings with the DOE, FERMCO, EPA and OEPA, the Pre-Design Investigation includes three objectives. The first objective is to identify the most suitable hydrogeology in this identified best area on site. The field components involve verification of the thickest gray clay and the identification of interbedded granular material. The second objective is the verification analysis of the protection of human health and the environment. The field components include verification of (1)

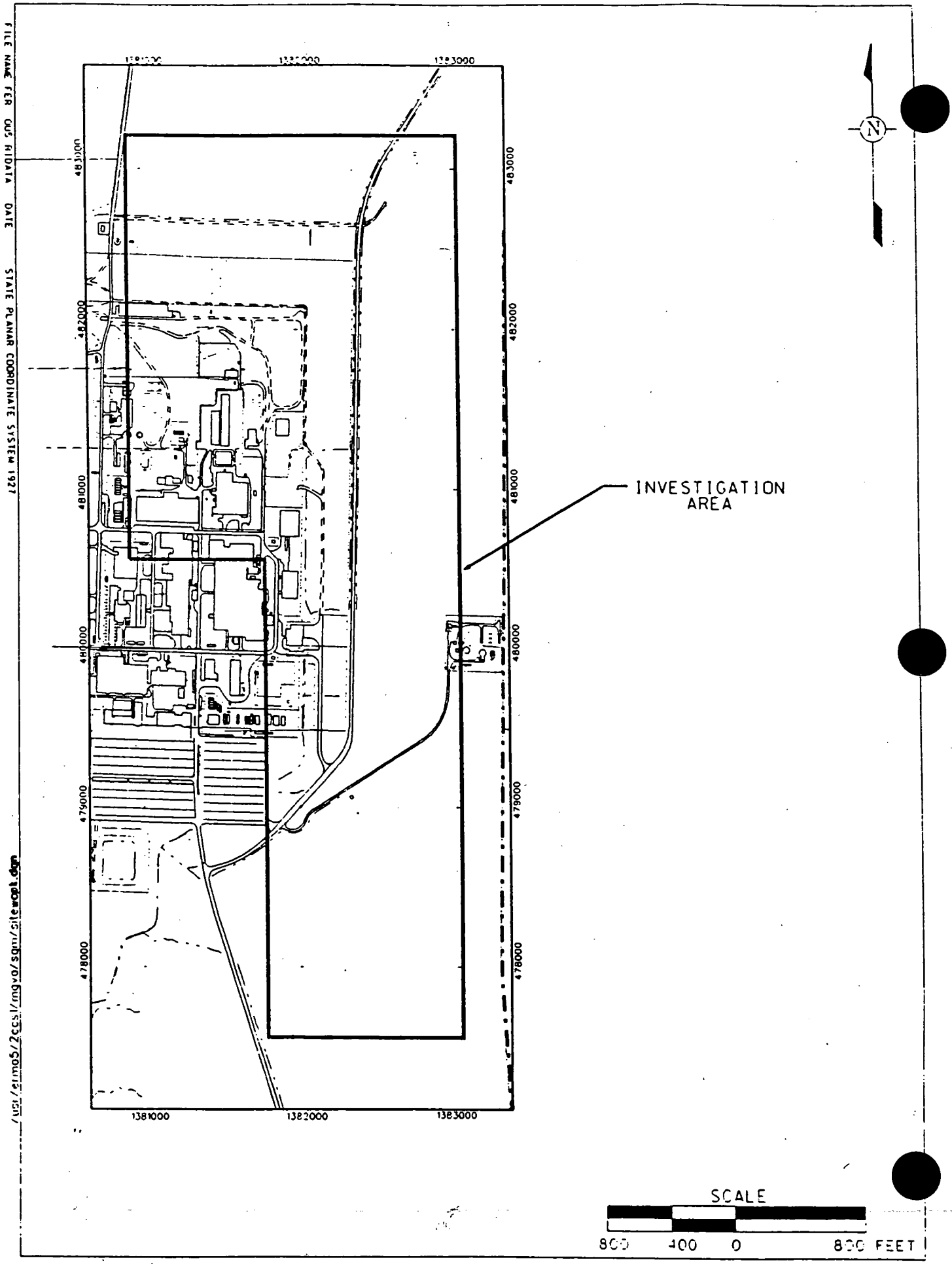

FIGURE 1-1. PROPOSED INVESTEGATION AREA

existing vertical and horizontal uranium contamination; (2) solubility of uranium present; (3) retardation of uranium; (4) lateral and vertical gradients; and (5) background concentrations of uranium of water in the vadose zone (background lysimeters). The third objective is to develop field information for the design of the disposal facility. The field components include location and extent of any interbedded granular material and geotechnical information in the footprint of the disposal facility.

The Pre-Design Investigation field work will be preformed in a phased approach. The first phase will include preliminary cone penetrometer testing and water level measurements of existing wells. This information will be used to better plan the sampling location during the second phase. The second phase will include the collection of data to identify the facility footprint which will include the verification of protection of human health and preliminary geotechnical sampling. The third phase will be to collect the detailed geotechnical data from the facility footprint needed for the design of the facility.

Information from previous investigations pertaining to the study area was analyzed as a first step in developing this plan. Lithological data records were compiled into a block model and, by the means of kriging, the level of certainty in knowing where interbedded granular areas exist was evaluated. This analysis served as the basis for identifying locations for Phase I and preliminary locations for the Phase II.

The scope of work identified in this plan is for Phases I and II of the Pre-Design Investigation field work. The scope of work for the Phase III investigation will be submitted in a separate plan.

2.0 SUMMARY OF PREVIOUS INVESTIGATIONS

Existing Fernald reports were reviewed to obtain information that would be useful in locating the disposal facility and/or in planning this Pre-design Investigation. The reports reviewed are listed in Table 2-1.

TABLE 2-1

SUMMARY OF REPORTS REVIEWED DURING WORK PLAN PREPARATION

Author	Date	Report
Westinghouse	April 1990	"Conceptual Design Report - Above-Ground Engineered Storage (AGES)"
Parsons	December 1990	"Pre-Conceptual Design Study - On-Site Low-Level Waste Disposal Facility"
Parsons	March 1992	"Conceptual Design Report for the Engineered Waste Management Facility"
U.S. Dept. of Energy (DOE)	June 1993	"Technical Report 5.1A, Engineering Evaluation Report for On-Site Disposal"
U.S. Dept. of Energy (DOE)	June 1993	"Technical Report 5.1B, Site Characterization/Geological Report for On-Site Disposal"
Parsons	March 1994	"On-Site Waste Disposal Cell Pre-Design Activities Engineering Report"
Parsons	May 1994	"FEMP Glacial Till/Vadose Zone Hydraulic Investigations Report - Operable Unit 5"
U.S. Dept. of Energy (DOE)	June 1994	"Remedial Investigation Report for Operable Unit 5," Volume 1 of 5

Of these reports, four reports and the Sitewide Environmental Database (SED) were found the most useful in obtaining data to plan the proposed work. These reports are:

- "The FEMP Glacial Till Report" (DOE 1994)
- "The On-Site Waste Disposal Cell Pre-Design Activities Engineering Report" (Parsons 1994)

- Technical Report 5.1B, "Site Characterization/Geological Report of On-Site Disposal" (DOE 1993)
- "The Draft Remedial Investigation Report for Operable Unit 5 at the FEMP" (DOE 1994)

The "FEMP Glacial Till/Vadose Zone Hydraulic Investigations Report - Operable Unit 5" (Parsons 1994) provides information on two lysimeters installed close to the study area. One is at the north edge of the area and one is within the south part of the investigation site (see Figure 8-2). These lysimeters will be re-sampled during the Pre-Design Investigation.

The report "On-Site Waste Disposal Cell Pre-Design Activities Engineering Report" (Parsons 1994) focused on the southwest corner of the current study area. Technical Report 5.1B "Site Characterization/Geological Report of On-Site Disposal" (DOE 1993) provided data concerning geological and geotechnical engineering characteristics on the north and east boundaries of the current study area. Data from these investigations were incorporated in an uncertainty analysis using solid block modeling.

The "The Draft Remedial Investigation Report for Operable Unit 5 at the FEMP" (DOE 1994) contained interpretations of stratigraphy and boring/well log data that was used in the development of the solid block model and in preparation of the work plan.

These existing studies, as well as miscellaneous monitoring activities undertaken during remedial investigations, have provided greater than 150 borings/wells within the boundaries of the study area.

The present work plan is based upon the existing data gathered from these reports in the following ways:

1. Thickness maps of brown and gray till, based upon existing data, are used to plan total depths for sampling;

2. Existing data are used to construct a 3-dimensional kriged model of the site geology;

3. The kriged model of the site geology is used to estimate the uncertainty of the current data on location and extent of sand units within the till, and

4. The location for future samples will be guided by the need to reduce uncertainty about the location of sand within the till.

The 3-dimensional kriged model was developed using existing lithological data records within the brown and gray clay within the study area. These records were converted into a 0/1 indicator variable, where a value of 1 was assigned to records designated as "sand" or "gravel". All other records were assigned a value of zero. A block model was created with the following parameters (measurements in feet):

Easting Range	1,380,900-1.383,100	(1927 State Planar)
Northing Range	477,500-438,200	(1927 State Planar)
Elevation Range	548-616	(MSL)
Block Size	100(East) x 100(North) x 1 Elevation	

A statistical distribution of the 0/1 variable was estimated for each block in the model using indicator kriging. Based on a sand/non-sand decision point of 0.5, and the 0/1 distribution assigned to each block, a new variable was calculated to represents the probability that a block be above the decision point of 0.5 and marked as a "sand" block. Using this new variable, areas were defined where there is a greater than 5% probability that the sand units are present. Conversely, the inverse of these areas represent the areas where, with a 95% confidence, there are no sands present.

The distribution that indicator kriging assigns to each block is defined by the two parameters: the mean value and the standard deviation of the distribution. The mean value is primarily influenced by the ratio of 0s and 1s in the nearby samples. The standard deviation is primarily influenced by the quantity and spatial nature of the samples around the block. As coverage of the samples around a block increases, the standard deviation decreases and vice versa.

Areas where the sample data is biased towards 0s or 1s are denoted as having "consistent" data.

Areas where the sample data has a mixture of 0s and 1s are denoted as having "inconsistent" data. Using this terminology, four types of areas are defined for locating additional sampling:

Table 2-2
Uncertainty of Kriged Estimates

	Many Samples	Few Samples
Consistent data	Type I: well understood and homogeneous	Type II: not well understood and possibly homogeneous
Inconsistent data	Type III: well understood and heterogeneous	Type IV: not well understood and possibly heterogeneous

Type II and IV areas have been considered in this plan for additional sampling. Confirmation sampling is recommended for Type I areas and no additional sampling is recommended for Type II areas. A preliminary determination of the study area has been made based on existing data and presented to EPA and OEPA during a planning meeting. The Phase I CPT information will be added to this uncertainty analysis prior to planning the specific Phase II sampling locations.

3.0 DATA QUALITY OBJECTIVES, QA/QC REQUIREMENTS, AND SAMPLING PLAN

3.1 DATA QUALITY OBJECTIVES

Data quality objectives (DQOs) are quantitative and qualitative descriptions of the data required to fulfill the purposes of the sampling effort. This section presents the results of the DQO development process for this Operable Unit 2 sampling activity. The process determines the necessity of sample collection, sample types, location and number of samples, and analytical requirements.

3.1.1 Purposes of Sampling Effort

The data quality objectives and sampling activities are intended to satisfy the following overall purposes:

Verify the most suitable geology and hydrogeology for the disposal facility with the identified best area.

- Identify the thickest gray clay.
- Identify interbedded granular material.
- Define areas that are relatively geologically homogeneous, so that specific tests of the soil and water can be related to known volumes of media in the study area.

Collect samples to verify values used in groundwater fate and transport models in the OU2 and OU5 FSs.

- Verify existing vertical and horizontal uranium contamination.
- Determine the solubility of the uranium present.
- Determine the soil retardation of uranium.
- Identify the vertical and lateral perched groundwater gradient.
- Determine the background uranium concentration in the vadose zone

Develop initial information for design of the disposal facility.

- Identify the initial geotechnical properties of the soil.

3.1.2 Development of Data Quality Objectives and Sampling Plan

Separate DQOs were developed for cone penetrometer testing, geotechnical sampling, chemical water and soil sampling, the nested well sampling and analysis, K_d sampling and the lysimeter sampling and analysis. These DQOs were developed using the following steps:

- The problem statement
- The decision
- Inputs that affect the decision
- Boundaries of the study

- The logic statement
- Constraints on the uncertainty of the decision
- Obtaining quality data
- Summary

Specific DQOs for this PSP were developed and are presented in Attachment I. Data requirements and corresponding sampling activities are presented in Table 3-1.

3.2 ASSIGNMENT OF EXISTING ANALYTICAL DQOs

One of five Fernald Environmental Management Project (FEMP)-defined analytical support levels (ASLs) will be assigned to all data to be collected depending on the intended use of the data. For this plan the ASL levels for each type of analysis is provided in Table 3-2.

Table 3-2
Analytical Support Level for the Pre-Design Investigation

Type of Analysis	Analytical Support Level
Cone Penetrometer	B
Water:	
General Chemistry	B
Radiological(except Tritium)	D
Tritium	E
Silica - Radiological	D
Soil:	
Radiological	D
Geotechnical	B

The specific definitions of the five ASL levels (A through E) are provided in the FEMP Sitewide CERCLA Quality Assurance Project Plan (SCQ) and are summarized in Table 3-3.

000015

TABLE 3-1

DATA REQUIREMENTS AND PROPOSED SAMPLING ACTIVITY

Basis for Data Requirement	Proposed Sampling Activity
Verify the thickest gray clay Define the location and extent of sand lenses, and collect additional data using the least obtrusive method possible. Locate areas that contain relatively homogenous geological conditions and obtain the least number of samples required to characterize the required properties of the clay and sand.	Define locations for required data by using a kriged 3-D model of sand and the uncertainty of the current model of sand. Locate first phase of sampling within areas of highest uncertainty. Utilize cone penetrometer sampling to minimize damage to the clay and define areas of relatively homogenous geology. Use soil sampling with an auger to confirm CPT interpretations and analyze soil samples. Characterize soil borings to locate areas of sand. Perform water level measurements of existing and new wells to perform inverse modeling to assist in determining connectivity of sands.
Verify existing vertical and horizontal uranium contamination and solubility.	Collect soil samples from the brown and gray clay for total uranium and TCLP uranium analyses. Install lysimeters and collect water samples. Analyze samples for chemistry, radio-isotopes and evaluate the apparent age of water.
Verify the ability of the brown and gray clay to retard the migration of uranium.	Collect batch samples from the brown and grey clay for K_d analysis.
Measure the vertical and lateral hydraulic gradient and permeability of the till to estimate vertical percolation of water.	Drill and install nested wells to measure hydraulic gradient in brown till and gray till. Core samples from the borings will have permeability measured. Use these data to estimate the potential velocity of water.
Determine the background uranium concentration in the vadose zone	Install nested lysimeters in a background area and collect water samples for total uranium analyses.
Identify initial geotechnical properties of the soil	Drill borings and take samples for preliminary geotechnical sampling.

3.3 QA/QC REQUIREMENTS

Sampling events follow Quality Assurance/Quality Control (QA/QC) protocol established in Section 4 and Appendix K of the SCQ, and EPD internal procedure EP-SMS-002, "Field Quality Control Samples."

The frequency and number of field QA/QC samples collected are based on the applicable DQOs and the CPID. Requirements and justification for collection of field QA/QC samples per sampling round shall be documented in this Pre-Design Investigation Project Specific Plan (PSP). Applicable laboratory QC sample types and frequency requirements are provided in Appendix G of the SCQ.

3.3.1 Project Requirements for Self-Assessments, Surveillances

Self-assessment and independent assessments of work processes and operations shall be undertaken to assure quality of performance. Self-assessment shall be performed by the Environmental Division, shall encompass technical and procedure requirements, and may be conducted at any point in the project.

Independent assessment shall be performed by the FEMP QA organization by conducting surveillances. As a minimum, one surveillance shall be conducted, consisting of monitoring/observing on-going project activity and work areas to verify conformance to specified requirements. Surveillances shall be planned and documented in accordance with Section 12.3 of the SCQ.

3.3.2 Field QA/QC Samples

Field QA/QC samples will consist of duplicates (soil and groundwater), field blanks (groundwater), and equipment rinsates (groundwater). The collection of field QA/QC samples are discussed further in Section 8.0.

One rinsate sample per 20 samples collected will be prepared and analyzed for total and isotopic uranium during soil sample collection. One rinsate sample per 20 samples or per sampling round, whichever is more frequent, will be collected during groundwater sampling and will be analyzed for inorganics and total and isotopic uranium.

TABLE 3-3

ANALYTICAL SUPPORT LEVELS

Support Level	Description	Typical Data Uses
A	*Qualitative Field Analysis* - This level is characterized by the use of portable instruments that can provide real-time data to assist in the optimization of sampling point locations and in providing health and safety support. Data can be generated regarding the presence or absence of contaminants (e.g., radionuclides, volatiles) at sampling locations. Analogous to Environmental Protection Agency (EPA) analytical level 1.	• Site characterization • Monitoring during implementation
B	*Qualitative, Semi-Quantitative, and Quantitative Analyses* - This level may include the use of more sophisticated screening techniques, such as portable analytical instruments that can be used on-site (close-support laboratories). Depending upon the types of contaminants, sample matrix, and QC checks applied, qualitative and quantitative data can be obtained. Analogous to EPA analytical level 2.	• Site characterization • Evaluation of alternatives • Engineering design • Monitoring during implementation
C	*Quantitative with fully defined QA/QC* - Laboratory analyses generated with full QA/QC checks of types and frequencies specified for ASL D according to FEMP-specified analytical protocols for radiological and nonradiological parameters. The analytical methods are identical to ASL D for QA/QC sample analysis and method performance criteria. However, the data package does not typically contain raw instrument output but does include summaries of QA/QC sample results. ASL C may be used when analyses require a rigid, well-defined protocol, but where other information is available, so that a complete raw data package validation effort is not required. Laboratories are required to retain, in the project file, raw instrument data to upgrade ASL C reports to ASL D. Analogous to EPA analytical level 3.	• Risk assessment • Site characterization • Evaluation of alternatives • Engineering design • Monitoring during implementation
D	*Confirmational with complete QA/QC and reporting* - Provides data generated with a full complement of QA/QC checks of specified types and frequencies according to FEMP-specified analytical protocols for radiological and nonradiological parameters. The data package includes raw instrument output for validation. These data may be used to confirm data gathered at ASLs B and C, and when full validation of raw data is required. Analogous to EPA analytical level 4.	• Risk assessment • Evaluation of alternatives • Engineering design
E	*Nonstandard* - Analyses by nonstandard protocols that often require method development or validation (e.g., when extracting detection limits or analysis of an unusual chemical compound is required). New methods may be developed for ASL E data to allow for parameters or matrices that cannot be analyzed by existing standard methods. Analogous to EPA analytical level 5.	• Risk assessment

A duplicate sample will be collected for every round of water sample collection or 1 in 20 water samples, whichever is greater; the duplicate will be analyzed for inorganics, total and isotopic uranium, and tritium. One soil chaining duplicate shall be collected from every seventh boring.

A field blank will also be prepared during water sample collection at each location and analyzed for inorganics and total and isotopic uranium.

One Cone Penetrometer Testing (CPT) duplicate will be tested for every tenth CPT location tested.

One field blank shall be prepared at each day of sampling at each location of sampling in accordance with Section K.4.6 of the SCQ. The sample containers containing organic-free de-ionized water will remain open during sampling activities at each location.

3.3.3 Field Changes to the PSP

Field changes to the PSP are at the discretion of the field geologist, sampling technician, and/or the Pre-Design Investigation Project Engineer. Prior to implementation of the field changes, the Project Engineer shall be informed of the proposed changes and the circumstances requiring the changes. Any changes to the activities specified in the PSP must have the approval of the Project Engineer and Quality Assurance prior to implementation. Changes to the program shall be documented on the applicable Variance Request Form within one week of approval. Field changes will not reduce the sampling activities defined in this PSP but may change the location of sampling or add additional sampling locations.

4.0 ORGANIZATION AND RESPONSIBILITIES

4.1 ORGANIZATION

This section describes the organizational and management structure to be used in implementing the Operable Unit 2 Pre-Design Work Plan at the FEMP. An Environmental Restoration Management Contract (ERMC) has been implemented at the FEMP site to manage the restoration activities, with Fernald Environmental Restoration Management Corporation (FERMCO). FERMCO, reporting directly to the Department of Energy Fernald Field Office (DOE-FN), will act as the main contractor for FEMP activities and coordinator of technical support and remediation subcontractors. Under the current FERMCO organizational structure, Operable Unit 2 activities will be the responsibility of Comprehensive Environmental Response, Compensation, and Liability Act/Resource Conservation and Recovery Act (CERCLA/RCRA) Unit 2 (CRU2), with such activities being conducted by individuals of various disciplines matrixed to CRU2 from other FERMCO departments (see Figure 8.1).

4.2 RESPONSIBILITIES

The major tasks that constitute the Operable Unit 2 Pre-Design Investigation organizational responsibilities to carry out those tasks are identified here. Primary responsibilities for implementing the Operable Unit 2 Pre-Design Work Plan will rest with Operable Unit 2 of the FERMCO organization, with additional necessary support provided through matrixing from other FERMCO departments and through subcontracts as appropriate to ensure quality and timeliness. Task-specific responsibilities will be implemented as follows:

1. Complete overall planning, integration, execution, and support of the Operable Unit 2 pre-design program. Implementation of these activities is the responsibility of the Environmental/Engineering Section matrixed to CRU2.

2. Prepare and obtain approval of Operable Unit 2 sampling and analytical procedures. Development of any new procedures will be the responsibility of the Planning Group within the Environmental/Engineering Section of CRU2. New procedures will be submitted to EPA for approval, as exceptions or addenda to the SCQ.

3. Prepare a sampling and analysis plan (SAP) per CERCLA guidance for conducting field investigations, sampling, and analytical tasks. Each SAP will be provided to the U.S. Environmental Protection Agency (EPA) and the Ohio Environmental Protection Agency (OEPA) for their review and approval before sampling activities are initiated.

4. Conduct the field program in accordance with the SCQ, established procedures, and the SAP, including all aspects of monitoring, sampling, and shipment of samples. FERMCO's Sample Collection/Data Management (SC/DM) will provide the necessary matrixed support to CRU2 to ensure completion of these tasks. Parsons will provide technical oversite and perform the geotechnical testing for geotechnical sample selection, analysis and interpretation.

5. Review and validation of chemical data collected during field sampling/field characterization program will be conducted by the Data Quality Management Department of the Environmental Division matrixed to CRU2, on an ongoing basis throughout the data collection and reporting processes. These tasks will be performed in accordance with the approved SCQ data validation procedures. Validated data will be entered into the FEMP Site-Wide Environmental Database (SED).

6. Assess and evaluate the field data to verify attainment of the data quality objectives of the Work Plan. Various facets of this task will be the responsibility of the Environmental/ Engineering Section of CRU2, including the Pre-design Investigation Group, and the Data Management Group.

4.3 SAMPLE TEAM ORGANIZATION

4.3.1 Organizational Structure

Sampling for this project will be performed by both Parsons and the Site Characterization Department of FERMCO. A schematic presentation of the organization is provided in Figure 4-1. Due to the nature, objectives and programmatic requirements of this project, actual sampling locations and analysis parameter selection have been designated by FERMCO personnel of Operable Unit 2.

Parson's geotechnical personnel will be responsible for retrieving geotechnical samples and producing the subsequent field boring logs. FERMCO personnel will be responsible for assisting in well construction, water sample collection and shipping of samples to the analytical lab.

Additional sampling custodian staff may be utilized to provide an interface between the sampling crews and the FEMP or contract laboratory to be used for sampling analysis.

FIGURE 4-1

PROPOSED ORGANIZATION
PRE-DESIGN INVESTIGATION

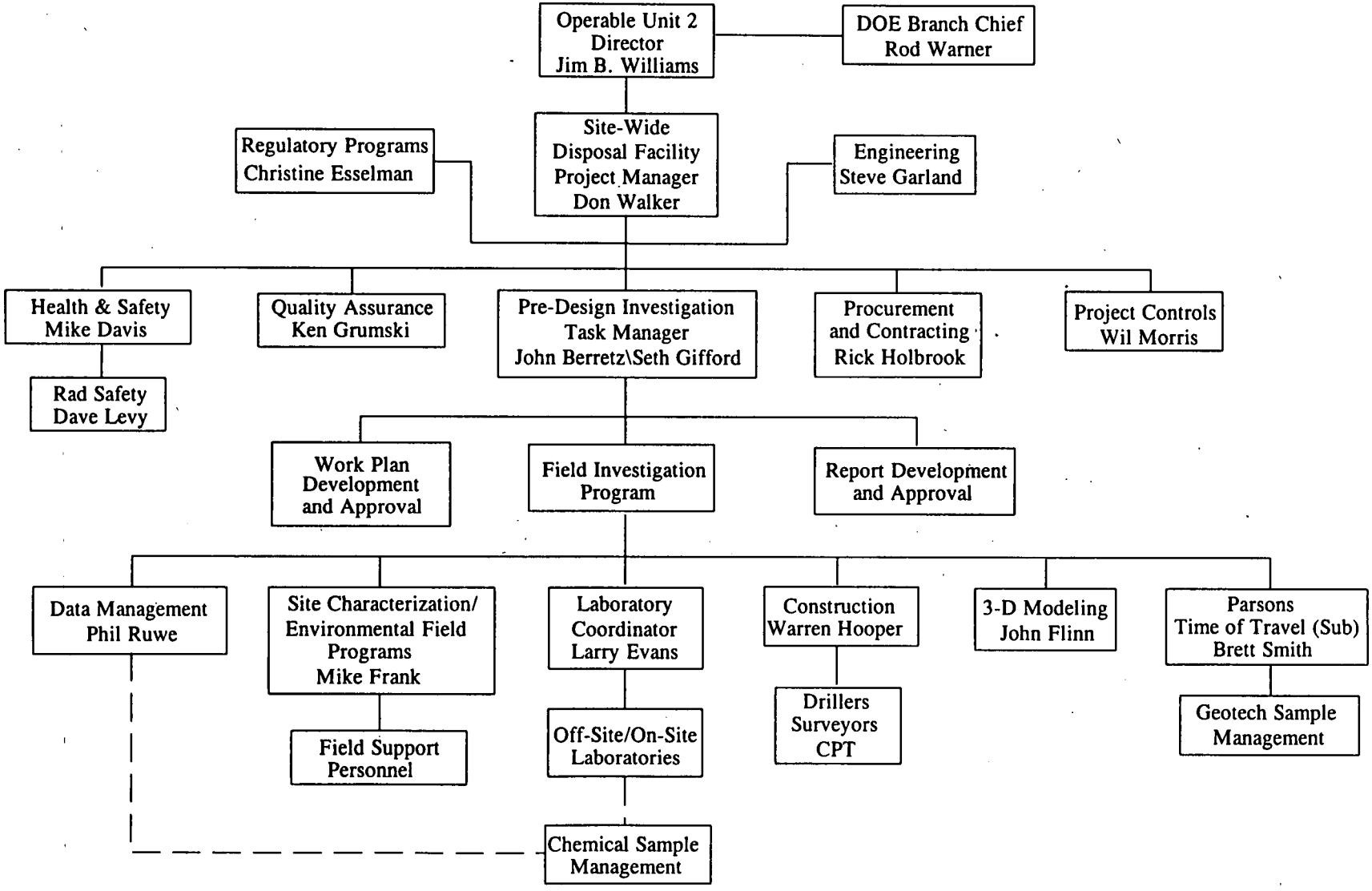

000022

6145

4.3.2 Responsibilities of Team Members

Overall project management will be provided by Mr. Don Walker, who is matrixed into CRU2. Reporting to him are the following functional groups:

- Regulatory Programs - responsible for assuring that the regulatory basis for the design is met by the proposed data collection
- Procurement/Contracting - Responsible for obtaining the required subcontract services
- Project Controls - Responsible for tracking costs and scheduling data
- Pre-Design Investigation Task Manager - Responsible for defining appropriate objectives for the program and reviewing data
- Engineering - Responsible for geotechnical testing and geotechnical data interpretation.

Field sampling personnel from Environmental Field Programs are responsible for the collection of the samples in accordance with the approved SAP. All activities associated with the execution of sampling are to be documented on the appropriate Field Activity Daily Logs (FADLs) which are to be completed, by the sampling technicians, for each location. These technicians are also responsible for ensuring that the proper sampling equipment is available and in serviceable condition. Also, proper decontamination of equipment between each sampling point is the responsibility of these staff.

Additional sampling custodian staff who interface with the FEMP or contract laboratory are responsible for ensuring that proper sampling containers, preservatives and sampling coolers are available and in serviceable condition.

Also, sample labeling, handling, storage and sample required paperwork in the form of a Sitewide Analysis Request/Custody Record (SWAR/CR) Form to be completed prior to submittal to the appropriate FEMP or contractor laboratory for analysis, are the responsibility of the sampling custodian. Finally, sampling custodians are responsible for logging in all collected samples, delivering the samples to the FEMP laboratory or sending the samples, with accompanying paperwork, to the contract laboratory. These personnel are a part of the Environmental Field Programs.

5.0 HEALTH AND SAFETY

The most successful methodology for providing an effective health and safety program for any activity is to ensure that involved personnel have received adequate training prior to implementation of the field work. Employee awareness of all physical, radiological, and chemical hazards which may be encountered will be accomplished by training throughout the planning and execution of this project.

All FEMP employee and subcontractor personnel who will be performing field work during this project will be required to have participated in all Occupational Safety and Health Administration (OSHA) mandated 1910.120 Hazardous Waste Site Worker training. In addition, all applicable annual refresher training will have been taken by the individuals.

U.S. DOE regulations at the FEMP require a series of site-specific training courses. These courses are designed to augment OSHA required training and provide additional training specific to the hazards which exist at the FEMP.

Field personnel participating in the performance of this project will be trained to the SCQ requirements, the FEMP Health and Safety Plan, and the Task Specific Health and Safety Plans.

In summary, employee awareness and clearly delineated lines of authority and responsibility have been designed to provide for effective health and safety related knowledge specific to each activity.

5.1 TASK SPECIFIC PLANS

All aspects of this Sampling and Analysis Plan will be performed in accordance with all existing applicable U.S. DOE, U.S. EPA, OSHA, and State of Ohio Health and Safety Regulations. Additionally, all practices will be managed in accordance with commonly accepted practices used in the hazardous waste industry.

Prior to the implementation of field work which involves drilling, trenching, or soil boring, a Penetration Permit will be obtained. Before a Penetration Permit is obtained, the area of concern is investigated and compared against the site database for underground utilities in the area. No drilling,

trenching or soil borings will be performed without a valid Penetration Permit being obtained prior to actual performance of the field work.

Field activities to be performed each have a separate task-specific health and safety plan. Task specific health and safety plans have been prepared in accordance with the FEMP Site Health and Safety Plan. For each project task and subtask, health and safety technician coverage is provided by the assignment of a technician to monitor the activities of the field crew. Project specific health and safety plans provide for the hazards typically encountered by personnel when performing the specified field work.

Existing task specific health and safety plans to be utilized for this project include:

- "Health and Safety Plan for Sampling of Wells and Surface Water Performed in Support of Sampling at the FEMP"
- "Health and Safety Plan for Surface Sampling Tasks Performed in Support of Sampling at the FEMP"
- "Health and Safety Plan for Well Drilling and Soil Boring Operations Performed in Support of Sampling at the FEMP"

Tasks not covered by the existing plans will have specific health and safety planning documents prepared, or existing documents will be revised as needed. Proper equipment to be used for health and safety monitoring and personnel protection are specified. Criteria for the selection of monitoring equipment and protective clothing are detailed.

Each member of the field crews is required to participate in a health and safety training session which is specific to each field project, prior to performance of this field work.

5.2 RADIOLOGICAL MONITORING AND CONTROLS

Radiological monitoring for this work plan will be achieved using existing institutional controls commonly utilized at the FEMP. For those areas of the FEMP which are under existing institutional radiological controls, any employee who will be entering such areas is required to possess and wear a Thermoluminescent Detector (TLD) to monitor for exposure to radiological contamination. In

addition, each employee is required to participate in a regularly scheduled urine analysis program which is designed to monitor for radiological exposure.

For areas which are subject to more restrictive radiological controls (i.e. the potential for exposure is greater), Radiation Work Permits are necessary and will be obtained prior to the field work being performed in those areas. A radiological technician will be assigned to each field crew performing any activities in an area which could result in site workers being exposed to levels of radiological contamination exceeding DOE requirements.

Ingress and egress of personnel, equipment and vehicles to and from radiologically controlled areas will be monitored with "real time" radiation detection instrumentation.

Monitoring results which exceed FEMP-determined exposure guidelines will be further evaluated as to the possible source(s). Measures necessary to remediate radiological contamination sources will be implemented. Such measures may include, but are not limited to, personnel training, decontamination, employee exposure monitoring, increased personnel monitoring, Personnel Protective Equipment, and sampling of suspect materials encountered.

If the responsible radiological technician assigned to the field activities being performed identifies a real or potential condition which could or will result in an unsafe condition, then that person has the responsibility to cease field operations until such time as the unsafe condition has been corrected.

5.3 NONRADIOLOGICAL MONITORING AND CONTROLS

Monitoring of potential health and safety problems associated with nonradiological hazards are evaluated by a health and safety technician. Also, all field crews are responsible for hazard awareness and recognition. Task specific training is designed to enhance the performance of all field work using good and safe work practices.

Evaluating the potential for personnel exposure to organic contaminants will be achieved mainly through the use of an HNu PI-101 Photoionization Detector. Other equipment which could potentially be used includes Drager tubes, oxygen meters and combustible gas indicators.

Proposed work in the East Area will be undertaken using protective level D, since the area is not a radiologically controlled area.

6.0 QUALITY ASSURANCE AND QUALITY CONTROL

The primary objectives of the QA/QC sections of this plan relate to the collection of field information needed to select a preferred location for the footprint of a 2.5 million cubic yard capacity disposal facility. Specific objectives of this field sampling effort will be designed, organized and implemented in a manner which will optimize the collection of information which meets predetermined data quality objectives. To ensure that information is gathered in such a manner that data quality objectives are met, QC measures will be used to determine conformance with overall program objectives. Cone penetrometer testing is not covered under the SCQ.

The fundamental mechanisms that will be used to achieve these project quality goals can be categorized as prevention, assessment, and correction. These components are further described as follows:

1. Prevention of defects in the data quality through planning and design, documented instructions and procedures, and careful selection and training of skilled, qualified personnel.

2. Quality assessment through a program of regular audits and surveillances to supplement continual informal review.

3. Permanent correction of conditions adverse to quality objectives through a close-looped corrective action system.

6.1 FIELD AND LABORATORY QUALITY CONTROL SAMPLES

Field QC samples will be taken to evaluate the possibility that some controllable practice, such as decontamination, or sampling technique may be responsible for introducing bias in project analytical results. Three types of QC samples will be collected for chemical samples: sampling equipment rinsates, field blanks, and duplicate samples (Section 4.1, SCQ).

6.2 ACCURACY, PRECISION, AND SENSITIVITY

For the purposes of this Sampling and Analysis Plan, Accuracy, Precision, and Sensitivity are defined in the following manner:

Accuracy and Precision

Accuracy is defined as degree of conformity to the true value, and is achieved by using recognized calibration standards. Precision is defined as degree to which measurements of replicates agree to one another, being free from bias or drift in the measurement data. A measure of precision is obtained by conducting duplicate analyses and then by assessing the agreement of the measured values.

Accurate and precise data will be achieved through the use of sampling and analysis procedures that minimize biases, through the use of standard procedures, through the meticulous calibration of field and analytical equipment, and by implementing corrective action whenever measured accuracy and precision exceed pre-established limits.

Sensitivity

Sensitivity is defined as the capability of indicating minute differences. The sensitivity of field measurements (eg., penetrometer measurements) will be estimated.

Refer to Section 4.2 of the SCQ for additional detail.

6.3 COMPLETENESS, REPRESENTATIVENESS, AND COMPARABILITY

For the purposes of this Sampling and Analysis Plan, Completeness, Representativeness, and Comparability are defined in the following manner:

Completeness

A sufficient number of successful measurements, at least 90 percent, must be obtained to determine the nature of soil, subsoil, and perched groundwater within the proposed pre-design investigation area.

Representativeness

Representativeness is the extent to which reported analytical results factually depict the chemistry of the sampled environmental media. This will be assured by following the SCQ, Appendix K. It is optimized through proper selection of investigation locations, sampling sites and intervals, proper sample handling and analysis.

Comparability

Comparability is the extent to which comparisons among separate measurements will yield valid conclusions. Comparability among measurements in the remedial investigation will be achieved through the use of rigorous standard field installation, sampling, document control, data reporting, and analytical procedures.

Refer to Section 4.3 of the SCQ for additional detail.

6.4 TRAINING, RECORDS ADMINISTRATION, AND DOCUMENT CONTROL

All FEMP employees and subcontractors assigned to this project will be required to participate in a series of regularly scheduled training sessions which are designed to enhance employee awareness of each one's responsibilities and duties in the project. Field staff will receive comprehensive project and task specific training. Project daily "Tailgate Safety Meetings" will augment health and safety and project objectives training prior to the project start.

Refer to Section 4.4 of the SCQ for additional details.

6.5 PERFORMANCE AND SYSTEM AUDITS

To verify compliance with the SCQ and project-specific requirements, the FEMP project manager and designated FEMP QA organization shall be responsible for scheduling and conducting QA audits and surveillance. Audit results of activities covered by the SCQ are available to the EPA upon request to DOE/FN. EPA may conduct external audits of FEMP activities covered by the 1991 Amended Consent Agreement as required.

As a minimum, audits shall consist of evaluation of the QA program and procedures, effectiveness of the implementation, and review of associated project documentation. Audits shall cover applicable laboratory activities, field operations and documentation and final reports. Auditing shall be performed in accordance with DOE guidelines, the SCQ and applicable PSPs.

As a minimum, surveillance shall consist of monitoring/observing ongoing project activity and work areas to verify item and activity conformance to specified requirements. Surveillance shall be scheduled, planned, and documented.

Refer to Section 12 of the SCQ for additional details.

7.0 FIELD ACTIVITY GUIDELINES

7.1 FIELD ACTIVITY REQUIREMENTS

This section presents a generalized description of the field activities proposed to complete Phase I and II of the Pre-Design Investigation. Field activities will consist of non-intrusive geotechnical surveying using a cone penetrometer, and intrusive sampling of soil, subsurface soil, and groundwater media using as soil auger. These will be accomplished in a phased approach; Phase I will consist of cone penetrometer testing, while Phase II will include soil borings and well installation, and the collection of soil and groundwater samples.

Procedures to be used during the performance of the field operations are derived from several FEMP program plans, procedures, ASTM guidance, and EPA sources. FEMP program plans, specifically the SCQ, Site-Wide RI/FS Work Plan, and FEMP SC/DM Department Standard Operating Procedures will be used as guidance documents. U.S. EPA procedure reference sources include the "Compendium of Superfund Field Operations Methods" and "Hazardous Waste Site Disposal Operations." Guidance for field activities is presented in Section 7.2 below.

For those field activities for which adequate procedures do not exist, activity-specific procedures are presented. These procedures will be in accordance with commonly accepted investigative techniques and recognized industry practices.

Because there is a possibility that the FEMP and surrounding area may contain archaeological sites, which are protected under Federal law, procedures have been developed to properly protect these sites. If any material is encountered during this investigation which may be a cultural or archaeological resource, work will stop immediately and the appropriate people notified. Attachment II outlines this procedure in greater detail.

7.2 FIELD OPERATIONS PROCEDURES

Tables 7-1 through 7-5 provide references for administrative, field, and sample handling/laboratory procedures for various activities in the Operable Unit 2 field investigation. These activities are:

- Geological survey using a cone penetrometer
- Soil sampling for geotechnical soil properties
- Soil sampling for selected chemical/radiological analysis
- Groundwater sampling for selected chemical/radiological analysis
- Lysimeter installation
- Well installation
- Water level measurements

TABLE 7-1

REFERENCE GUIDELINES

Administrative Procedures	Reference Documents
QA/QC	SCQ Sections 4, 5, 10, and 11; Appendix A/Table 2-2; Appendix D; Appendix J
QA/QC of Grout	ASTM C109-92 "Standard Test Method for Compressive Strength of Hydraulic Cement Mortars"
Chain of Custody	SCQ Volume I, Section 7.1; RI/FS Fernald Project Policy and Procedures Manual, FPP-401, Section 5.1.12
Corrective Action	SCQ Volume I, Section 15.2; RI/FS Fernald Project Policy and Procedures Manual, FPP-210
Daily Logs	SCQ Appendix J, Subsection J.4.1
Variances	SCQ Volume I, Section 15.4.1; RI/FS Fernald Project Policy and Procedures Manual, FPP-203
Document Change Request	SCQ Volume I, Section 4.4.3.2; RI/FS Fernald Project Policy and Procedures Manual, FPP-200

Field Procedures	Reference Documents
General Drilling Practices	SCQ Section 5.2.1; Appendix J, Subsection J.4.2
Monitoring Well/Piezometer Design, Installation, and Abandonment	SCQ, Section 5.2.2; Appendix J, Subsection J.4.3; PCN-EM-GW-004-1-01 and -02 - Standard Operating Procedure for Well Plugging and Abandonment
Abandonment	ASTM D5299-42 "Standard Guide for Decommissioning of Groundwater Wells, Vadose Zone Monitoring Devices, Boreholes and Other Devices for Environmental Activities" OAC 3745-9-10 "Abandonment of Test Holes and Wells" ASTM C150-92 "Standard Specification for Portland Cement"
Well Development	SCQ Appendix J, Subsection J.4.4
Field Screening of Samples for Radioactive Contamination	SCQ Appendix K, Subsection K.5.3.2; RI/FS Fernald Project Policy and Procedures Manual, FPP-600
Decontamination	SCQ Appendix K, Subsection K.11

TABLE 7-1

(Continued)

Administrative Procedures	Reference Documents
Sample Handling/ Laboratory Procedures	**Reference Documents**
Classification, Transportation, and Shipment of FEMP RI/FS Samples	RI/FS Fernald Project Policy and Procedures Manual, FPP-601; SCQ Appendix K, Subsection K.10; Volume I, Subsection 6.7; Compendium of Superfund Field Operations Methods, Section 6.0

TABLE 7-2

GROUNDWATER SAMPLING PROCEDURES

Administrative Procedures	Reference Documents
See Table 7-1	See Table 7-1

Field Procedures	Reference Documents
General Groundwater Purging and Sampling Techniques	SCQ Volume I, Subsection 6.2; Appendix K, Subsection K4.2; SC-GWM-FO-201 Groundwater Sampling Activities
Water Level Measurements	SCQ Volume I, Section 6.2.2.1; Appendix K, Subsection K.4.2.1; EP-GWM-200 Groundwater Elevation Measurements
Field Analytical Methods	SCQ Volume I, Subsection 6.2; Appendix K, Subsection K.4.1
Parameter-Specific Sampling Procedures	SCQ Volume I, Subsection 6.2.2.3; Appendix K, Subsection K.4.2.3;
Decontamination	SCQ Appendix K, Subsection K.11 SC-GWM-FO-201 Groundwater Elevation Measurements

Sample Handling/Laboratory Procedures	Reference Documents
Classification, Transportation, and Shipment of FEMP RI/FS Samples	See Table 7-1

TABLE 7-3

UNSATURATED ZONE SURVEY PROCEDURES

Administrative Procedures	Reference Documents
See Table 7-1	See Table 7-1

Field Procedures	Reference Documents
Lysimeter installation and sampling	ASTM D4696; Section 8.3.1 of this Sampling and Analysis Plan
Decontamination	Appendix 3, EM-6W-004 of this Sampling and Analysis Plan

Sample Handling/Laboratory Procedures	Reference Documents
Sample Handling and Analysis	Sections 8.5 and 8.8 of this Sampling and Analysis Plan Analabs, A Unit of Foxboro Analytical, "Operating and Service Manual for Century Systems, Portable Organic Vapor Analyzer (OVA) Model OVA-128 and Optional Accessories, Revision C"

TABLE 7-4

GEOTECHNICAL SURVEYING PROCEDURES

Administrative Procedures	Reference Documents
See Table 7-1	See Table 7-1

Field Procedures	Reference Documents
Penetrometer Techniques	Section 8.3.1 of this Sampling and Analysis Plan; ASTM D 3441-86 "Standard Method for Deep, Quasi-Static, Cone and Friction-cone Penetrometer"

TABLE 7-5

SOIL SAMPLING PROCEDURES

Administrative Procedures	Reference Documents
See Table 7-1	See Table 7-1

Field Procedures	Reference Documents
General Drilling Practices	See Table 7-1
Subsurface Sampling	SCQ Appendix K, Section K.5.3
Surface Sampling	SCQ Appendix K, Section K.5.1
Field Screening of Samples for Radioactive Contamination	SCQ Appendix K, Section K.11; RI/FS Fernald Project Policy and Procedures Manual, FPP-600
Decontamination	See Table 7-1

Sample Handling/Laboratory Procedures	Reference Documents
Classification, Transportation, and Shipment of FEMP RI/FS Samples	See Table 7-1
Geotechnical Analyses	ASTM reference methods as shown on Table 8-5

8.0 FIELD SAMPLING PLAN

8.1 SAMPLE TYPE LOCATION AND ANALYSES

Table 8-1 and Figure 8-1 is a summary of soil sample collection proposed for the pre-design activity. Table 8-2 presents totals for the chemical analysis for soil and water, and Table 8-3 summarize water level measurements for inverse modeling.

Sample collection methods and field and analytical methods and procedures are discussed in the following sections.

8.2 FIELD PROGRAMS

8.2.1 Cone Penetrometer Testing

8.2.1.1 Objectives.

Cone penetrometer testing (CPT) is proposed as a relatively non-intrusive soil sampling method since soil is not collected for testing. CPT will assist in identifying the most suitable geology and hydrogeology. This will include identifying the thickest gray clay and identifying the location and extent of interbedded granular material.

Proposed CPT locations are shown on Figure 8-1. The CPT activity will preceed other activities proposed for the Pre-Design Investigation. The locations for the CPT were selected by 3-dimensional model of uncertainties and will compliment existing data in the following areas:

- Where existing lithological sampling was sparse, but the existing data were relatively homogenous with respect to the detection of clay or sand materials, and
- Where existing data were sparse, but the data were inconclusive concerning clay or sand. These areas are possibly geologically heterogenous and were selected for additional characterizations.

These areas were selected since the addition of even limited data would increase the certainty in geological interpretation.

TABLE 8-1

SUMMARY SHEET OF
SOIL SAMPLES
PRE-DESIGN INVESTIGATION IN THE EASTERN AREA

Location	Moisture Content (ASTM 2216)	Grain Size/Hydrometer and Specific Gravity (ASTM 422, 854)	Atterburg Limits (ASTM 4318)	Unit Weight (ASTM 2937)	Standard Proctor (ASTM 698)	One-Dimensional Consolidation Tests (ASTM 4767, ASTM 2435)	Remolded and Vertical Permeability (ASTM 5084)	K_d, Total U and Iso. U	Triaxial Shear	TCLP Total U & TCLP Isotopic U	Total U & Isotopic U
11468	6	6	6	6	2		2		1		2
11469	6	6	6	6	2		2	2, 2	1	2	2
11470	6	6	6	6	2	2	2		2		2
11471	6	6	6	6	2	2	2	2, 2	1	2	2
11472	6	6	6	6	2		2		1		2
11473	6	6	6	6	2		2	2, 2	2	2	2
11474	6	6	6	6	2	2	2		1		2
11475	6	6	6	6	2	2	2	2, 2	1	2	2
11476	6	6	6	6	2		2		2		2
11477	6	6	6	6	2		2	2, 2	1	2	2
11478	6	6	6	6	2		2		1		2
11479	6	6	6	6	2		2	2, 2	2	2	2
11480	6	6	6	6	2		2		1		2
11481	6	6	6	6	2		2	2, 2	1	2	2
11482										1	1
11483										1	1
11484										1	1
11485										1	1
11486										1	1
11487										1	1
11488										1	1
11489										1	1
11490										1	1
11491										1	1
11492										1	1
11493										1	1
11494										1	1
11495										1	1

TABLE 8-1

SUMMARY SHEET OF
SOIL SAMPLES
PRE-DESIGN INVESTIGATION IN THE EASTERN AREA

Location	Moisture Content (ASTM 2216)	Grain Size/Hydrometer and Specific Gravity (ASTM 422, 854	Atterburg Limits (ASTM 4318)	Unit Weight (ASTM 2937)	Standard Proctor (ASTM 698)	One-Dimensional Consolidation Tests (ASTM 4767, ASTM 2435)	Remolded and Vertical Permeability (ASTM 5084)	K_d, Total U and Iso. U	Triaxial Shear	TCLP Total U & TCLP Isotopic U	Total U & Isotopic U
11496										1	1
11497	X									1	1
11498	X									1	1
11499	X									1	1
11500	X									1	1
11501	X									1	1
11502	X									1	1
11503	X									1	1
11504	X									1	1
11505	X									1	1

NOTE: The numbers in each column indicate the number of samples for that analyte that will be collected at that location. The locations for the uranium phases are tentative and subject to change.

11468 through 11481 are proposed geotechnical borings, 11482 through 11490 are proposed lysimeter locations, and 11491 through 11505 are proposed piezometers.

s - soil samples
w - water samples

TABLE 8-2

CHEMICAL ANALYSES
FOR SOIL AND
WATER SAMPLES

Location Type	Analytes and Number of Samples										
	Calcium	Magnesium	Bromide	Carbonate	Nitrate	Phosphate	Sulfate	Isotopic U & Total Uranium	TCLP Uranium & Isotopic U	Tritium	K_d Total U & Isotopic U
9 Lysimeters (Water)	36	36	36	9	9	9	9	9		3	
" (Soil)								9	9		
15 Piezometers (Water)	15	15	15	15	15	15	15	15		15	
" (Soil)								15	15		
14 Soil Sample Locations (Soil)									14		28
K_d Water Samples											36
Total	51	51	51	24	24	24	24	48	38	18	64

NOTE: Numbers indicate total number of samples that will be collected for the indicated analyte.

TABLE 8-3

WATER LEVEL MEASUREMENTS

Location	Type Manual	Transducer	Frequency
1110		X	once/hour
1112		X	once/hour
1151		X	once/hour
1278		X	once/hour
11230		X	once/hour
1131		X	once/hour
1418		X	once/hour
1274	X		once/week
1444	X		once/week
1733	X		once/week
1843	X		once/week
1866	X		once/week
1905	X		once/week
11067	X		once/week
1064	X		once/week
1152	X		once/week
1160	X		once/week
1149[1]	X		once/week
1167[1]	X		once/week
1124[1]	X		once/week
1887[1]	X		once/week
1301[1]	X		once/week
1293[1]	X		once/week

[1]Additional wells being considered for manual water elevation readings.

8.2.2 Groundwater Elevations for Inverse Modeling

An inverse model is proposed that will use measured rainfall data and the response in selected wells to estimate the hydraulic conductivity of the till. This is called inverse modeling because traditional modeling uses measured values of hydraulic conductivity to predict water level changes. The inverse model solution for hydraulic conductivity will not be a unique one, however, since the infiltration and transmissivities in the till will both be estimated parameters. The value of the model will be in its capacity to test reasonable assumptions concerning the physical structure of the geology and to act as an additional model to assess the hydrogeological properties of the study area. A description of the inverse model which will be used is

> MODINV Using a starting estimate of the hydraulic conductivity, the model adjusts the estimate and adds missing parameter data based upon the measured change in groundwater elevations. The model can provide a quantitative estimate of parameter value uncertainty that can indicate the value for additional hydraulic testing.

To complete the proposed inverse modeling, groundwater elevation data will be required from numerous wells within the study area for a relatively long period of time. The following wells that have possible rapid responses to precipitation recharge will be monitored with transducers and data loggers: 1272, 1151, 1281, 1324, 1110, 1418, and 1112. Data loggers will be set to collect water levels every hour for at least one month period. Other wells will be monitored on a regular basis by hand measurement methods. One measurement per week will be made, with an additional measurement made one day after rainfall events that exceed 0.5 inches. These wells include the following: 1124, 1444, 1733, 11067, 1905, 1866 and 1843.

The range in water level changes is expected to be on the order of five feet or less during the study period, which will start October 3, 1994. A 10 to 20 PSI transducer with a Hermit brand data logger (or equivalent) will be used. Manual water level measurements will be collected on the same day, if possible, and recorded to the nearest 0.01 foot depth.

8.2.3 Sampling From Soil Boring Locations

8.2.3.1 Objectives

There are fourteen boring locations proposed to collect soil samples to (1) characterize the engineering properties (geotechnical properties) of the soil, (2) verify existing vertical and horizontal uranium contamimnation, (3) determine the solubility of uranium, (4) assist in identifying interbedded granular material, and to (5) determine the uranium retardation potential or the partitioning coefficient (K_d) for the soil in the study area.

8.2.3.2 Soil Sample Collection

Soil samples will be collected from 14 soil borings drilled by truck-mounted hollow-stem auger drill rig and split-spoon or Shelby tube type sampler, or by Rotosonic Drilling with Shelby tube samples collected with the same hydraulic push method used for auger rigs. The proposed locations and quantity of samples are provided in Table 8-1. The analytical methods to be used are referenced in the tables and described in Table 8-4. The sample types and depths are presented in Table 8-5, and sample volumes, containers and preservatives are listed in Tables 8-6 and 8-7.

The 14 proposed locations will be defined upon completion of the cone penetrometer testing. Geotechnical samples will be collected from both the brown and the gray soils as described in Table 8-6. These samples will help determine whether the soils in the study area display the preliminary engineering properties for facility design. In addition to geotechnical samples, soil samples will be collected from each boring, one from the brown clay and one from the gray clay, for a total of 28 samples, and analyzed for total uranium, isotopic uranium, TCLP Total Uranium and TCLP Isotopic Uranium. These data will be used to define the vertical and horizontal distribution of uranium in the soil of the study area and the solubility of uranium. The TCLP samples will be collected as close to the K_d soil collection interval as practicable.

Samples for definition of the distribution coefficient (K_d) analysis will be collected from seven of the borings: one from the gray and one from the brown clay for a total of 14 samples (see Table 8-5). Soil samples will be transferred to containers as quickly as possible with as little disturbance as possible. A minimum of 2000 grams (field weight) of soil will be collected from each location.

TABLE 8-5
SUMMARY OF ASTM PROCEDURES

TEST NO.	TITLE
ASTM D422	Standard Method for Particle Size Analysis for Soils
ASTM D854	Standard Test Method for Specific Gravity of Soils
ASTM D2216	Standard Test Methods for Laboratory Determination of Water (Moisture) Content of Soil, Rock, and Soil-Aggregate Mixtures
ASTM D4318	Test Method for Liquid Limit, Plastic Limit, and Plasticity Index of Soils
ASTM D4767	Test Method for Consolidated-Undrained Triaxial Compressive Test on Cohesive Soils
ASTM D5084	Standard Test Method for Measurement of Hydraulic Conductivity of Saturated Porous Materials Using a Flexible Wall Permeameter
ASTM D2435	Test Method for One-Dimensional Consolidation Properties of Soil
ASTM D698	Laboratory Compaction Characteristics of Soil Using Standard Effort
ASTM D2937	Unit Weight
ASTM D4319	Standard Test Method for Distribution Ratios by the Short-Term Batch Method
ASTM C109	Compressive Strength of Hydraulic Cement Mortars
ASTM C150	Standard Specification for Portland Cement
ASTM D4319	Distribution Ratios by the Short-Term Batch Method
ASTM D420	Standard Guide for Investigating and Sampling Soil and Rock
ASTM D1452	Standard Practice for Soil Investigation and Sampling by Auger Borings
ASTM D1586	Standard Test Method for Penetrometer Test and Split-Barrel Sampling of Soils
ASTM D1587	Standard Practice for Thin-Walled Tube Sampling of Soils

ASTM D2166	Standard Test Method for Unconfined Compressive Strength of Cohesive Soil
ASTM D2487	Standard Classification of Soils for Engineering Purposes
ASTM D2488	Standard Practice for Description and Identification of Soils
ASTM D3441	Standard Test Method for Deep, Quasi-Static, Cone and Friction Penetration Tests of Soil
ASTM D4696	Standard Guide for Pore-Liquid Sampling from the Vadose Zone
ASTM D4700	Soil Sampling from the Vadose Zone
ASTM D5299	Standard Guide for Decommissioning of Groundwater Wells, Vadose Zone Monitoring Devices, Boreholes, and Other Devices for Environmental Activities

TABLE 8-6

SOIL SAMPLE
TYPES, LOCATIONS AND DEPTHS

Location	Approximate Depth (Ft.)	Moisture Content	Grain Size/Hydrometer and Specific Gravity	Atterburg Limits	Standard Proctor	Consolidation Tests	Remolded Permeability	K_d Total U & Isotopic U,	Unit Weight	Vertical Permeability	Triaxial Shear	TCLP Total U & TCLP Isotopic U	Total U & Isotopic U
11468													
	0	X	X	X					X				
Brown	5	X	X	X	X		X		X	X			X
	10	X	X	X	X				X				
Grey	15	X	X	X					X	X	X		
Grey	20	X	X	X					X				X
	25	X	X	X					X				
11469													
	0	X	X	X					X				
Brown	5	X	X	X	X		X	X, X	X	X		X	X
	10	X	X	X	X				X				
Grey	15	X	X	X					X	X	X		
Grey	20	X	X	X				X, X	X			X	
	25	X	X	X					X				
	30	X	X	X					X				
11470													
	0	X	X	X					X				
Brown	5	X	X	X	X	X	X		X	X			X
	10	X	X	X	X				X				
Grey	15	X	X	X		X			X	X	X		
Grey	20	X	X	X					X				X
	25	X	X	X					X				
	30								X				

TABLE 8-6

SOIL SAMPLE
TYPES, LOCATIONS AND DEPTHS

Location	Approximate Depth (Ft.)	Moisture Content	Grain Size/Hydrometer and Specific Gravity	Atterburg Limits	Standard Proctor	Consolidation Tests	Remolded Permeability	K_d Total U & Isotopic U,	Unit Weight	Vertical Permeability	Triaxial Shear	TCLP Total U & TCLP Isotopic U	Total U & Isotopic U
11471													
	0	X	X	X					X				
Brown	5	X	X	X	X	X	X	X, X	X	X		X	X
	10	X	X	X	X				X				
Grey	15	X	X	X		X			X	X	X		X
Grey	20	X	X	X				X, X	X			X	
	25	X	X	X					X				
	30	X	X	X					X				
11472													
Brown	0	X	X	X					X				
	5	X	X	X	X		X		X	X			X
Grey	10	X	X	X	X				X				
	15	X	X	X					X	X	X		X
	20	X	X	X					X				
	25	X	X	X					X				
	30	X	X	X					X				
11473													
Brown	0	X	X	X					X				
	5	X	X	X	X		X	X, X	X	X		X	X
Grey	10	X	X	X	X				X				
	15	X	X	X					X	X	X		X
	20	X	X	X				X,X	X			X	
	25	X	X	X					X				
	30	X	X	X					X				

TABLE 8-6

SOIL SAMPLE
TYPES, LOCATIONS AND DEPTHS

Location	Approximate Depth (Ft.)	Moisture Content	Grain Size/Hydrometer and Specific Gravity	Atterburg Limits	Standard Proctor	Consolidation Tests	Remolded Permeability	K_d Total U & Isotopic U,	Unit Weight	Vertical Permeability	Triaxial Shear	TCLP Total U & TCLP Isotopic U	Total U & Isotopic U
11474													
Brown	0	X	X	X					X				
	5	X	X	X	X	X	X		X	X			X
Grey	10	X	X	X	X				X				
	15	X	X	X		X			X	X	X		X
	20	X	X	X					X				
	25	X	X	X					X				
	30	X	X	X					X				
11475													
Brown	0	X	X	X					X				
	5	X	X	X	X	X	X	X, X	X	X		X	X
Grey	10	X	X	X					X				
	15	X	X	X	X	X			X	X	X		X
	20	X	X	X				X, X	X			X	
	25	X	X	X					X				
	30	X	X	X					X				
11476													
	0	X	X	X					X				
Brown	5	X	X	X	X		X		X	X			X
	10	X	X	X					X				
Grey	15	X	X	X	X				X	X	X		X
	20	X	X	X					X				
	25	X	X	X					X				
	30	X	X	X					X				

TABLE 8-6

SOIL SAMPLE
TYPES, LOCATIONS AND DEPTHS

Location	Approximate Depth (Ft.)	Moisture Content	Grain Size/Hydrometer and Specific Gravity	Atterburg Limits	Standard Proctor	Consolidation Tests	Remolded Permeability	K_d Total U & Isotopic U,	Unit Weight	Vertical Permeability	Triaxial Shear	TCLP Total U & TCLP Isotopic U	Total U & Isotopic U
11477													
	0	X	X	X					X				
Brown	5	X	X	X	X		X	X, X	X	X		X	X
	10	X	X	X					X				
Grey	15	X	X	X	X				X	X	X		X
	20	X	X	X				X, X	X			X	
	25	X	X	X					X				
	30	X	X	X					X				
11478													
	0	X	X	X					X				
Brown	5	X	X	X	X		X		X	X			X
	10	X	X	X	X				X				
Grey	15	X	X	X					X	X	X		X
	20	X	X	X					X				
	25	X	X	X					X				
	30	X	X	X					X				
11479													
	0	X	X	X					X				
Brown	5	X	X	X	X		X	X, X	X	X		X	X
Grey	10	X	X	X	X				X				
	15	X	X	X					X	X	X		X
	20	X	X	X				X, X	X			X	
	25	X	X	X					X				
	30	X	X	X					X				

TABLE 8-6

SOIL SAMPLE
TYPES, LOCATIONS AND DEPTHS

Location	Approximate Depth (Ft.)	Moisture Content	Grain Size/Hydrometer and Specific Gravity	Atterburg Limits	Standard Proctor	Consolidation Tests	Remolded Permeability	K_d Total U & Isotopic U,	Unit Weight	Vertical Permeability	Triaxial Shear	TCLP Total U & TCLP Isotopic U	Total U & Isotopic U
11480													
	0	X	X	X					X				
Brown	5	X	X	X	X		X		X	X			X
Grey	10	X	X	X	X				X				
	15	X	X	X					X	X	X		X
	20	X	X	X					X				
	25	X	X	X					X				
	30	X	X	X					X				
11481													
	0	X	X	X					X				
Brown	5	X	X	X	X		X	X, X	X	X		X	X
Grey	10	X	X	X	X				X				
	15	X	X	X					X	X	X		X
	20	X	X	X				X, X	X			X	
	25	X	X	X					X				
	30	X	X	X					X				

NOTE: If recovery is low, alternative locations will be chosen on an as-needed basis by 2 Task Manager.

TABLE 8-6

SOIL SAMPLE
TYPES, LOCATIONS AND DEPTHS

Location	Approximate Depth (Ft.)	Moisture Content	Grain Size/Hydrometer and Specific Gravity	Atterburg Limits	Standard Proctor	Consolidation Tests	Remolded Permeability	K_d Total U & Isotopic U,	Unit Weight	Vertical Permeability	Triaxial Shear	TCLP Total U & TCLP Isotopic U	Total U & Isotopic U
11482	7											X	X
11483	35											X	X
11484	55											X	X
11485	7											X	X
11486	35											X	X
11487	55											X	X
11488	7											X	X
11489	35											X	X
11490	55											X	X
11491	20											X	X
11492	20											X	X
11493	20											X	X
11494	20											X	X
11495	20											X	X
11496	20											X	X
11497	20											X	X
11498	20											X	X
11499	20											X	X
11500	20											X	X
11501	20											X	X
11502	20											X	X
11503	20											X	X
11504	20											X	X
11505	20											X	X

TABLE 8-7

SAMPLE VOLUME, CONTAINERS, AND PRESERVATION - SOIL SAMPLES

Parameter	Container	Preservation
TCLP Uranium	1 x 500 mL wide mouth amber glass	4°C
Specific Gravity	1 x 500 mL glass wide mouth	None
Water Content	1 x 500 mL glass wide mouth	None
Liquid Limit, Plastic Limit	1 x 1.D.L glass wide mouth	None
Analysis, Hydrometer Analysis	1 x 1.0 L glass wide mouth	None
Dry Unit Weight, Consolidation, Hydraulic Conductivity, Unconfined Compression	1 3x24 in. Shelby tube	None
Consolidated Undrained	1 3x24 in. Shelby tube	None

TABLE 8-8

SAMPLE VOLUME, CONTAINERS, AND PRESERVATION - WATER/QA SAMPLES

Parameter	Container	Preservation
Bromide	1 x 1 L plastic	4°C
Tritium	1 x 1 L plastic	None
Alkalinity, Bromide, Calcium, Magnesium, Nitrate, and Sulfate	1 x 1 L plastic	None
Total Uranium	1 x 1 L plastic	None
Isotopic Uranium	1 x 1 L plastic	None

8.2.4 Lysimeter Testing

Installation requirements for lysimeters are detailed in ASTM D4696 and the TIMCO installation methodology (TIMCO may be replaced with another vendors specification). These documents are provided in Attachments VII and III respectively for reference. A summary of the proposed installation requirements is provided below.

8.2.4.1 Objectives

Nested lysimeters will be installed and sampled to determine the nature of uranium and the concentration of uranium in the glacial till and the Upper Great Miami Aquifer for the Eastern Site and for an off-site location. The data from the off-site location are intended to establish background lysimeter uranium concentrations. Also, age dating, by conducting tritium analysis, will be performed for the vadose zone. The age of the water will assist in determining the time it takes surface water to reach a certain depth in the vadose zone. Samples will be collected to determine when the lysimeters have reached equilibrium and to establish some general chemistry properties for the groundwater collected from the vadose zone.

8.2.4.2 Lysimeter Placement and Installation

Preliminary locations for the lysimeter placement are shown in Figure 8-1. Lysimeters will be placed in clusters to monitor the fluid characteristics at multiple depths at one location. The final locations for installation will be selected to obtain data that is representative of the till; consequently, these representative areas will be determined after penetrometer testing and 3-D modeling has been conducted.

There will be two on-site locations with three nested lysimeters each, and one off-site location with three lysimeters. The lysimeters will be installed using a hand auger and Rotosonic drilling, the shallowist installation being approximately 7 feet deep and located in the upper brown till, the second deepest installed approximately 5 feet from the base of the till (approximately 35 to 40 feet deep), and the deepest approximately 5 to 10 feet into the Upper Great Miami Aquifer (approximately 50 to 55 feet deep). General drilling practices will be in accordance with the SCQ when possible. Table 8-8a

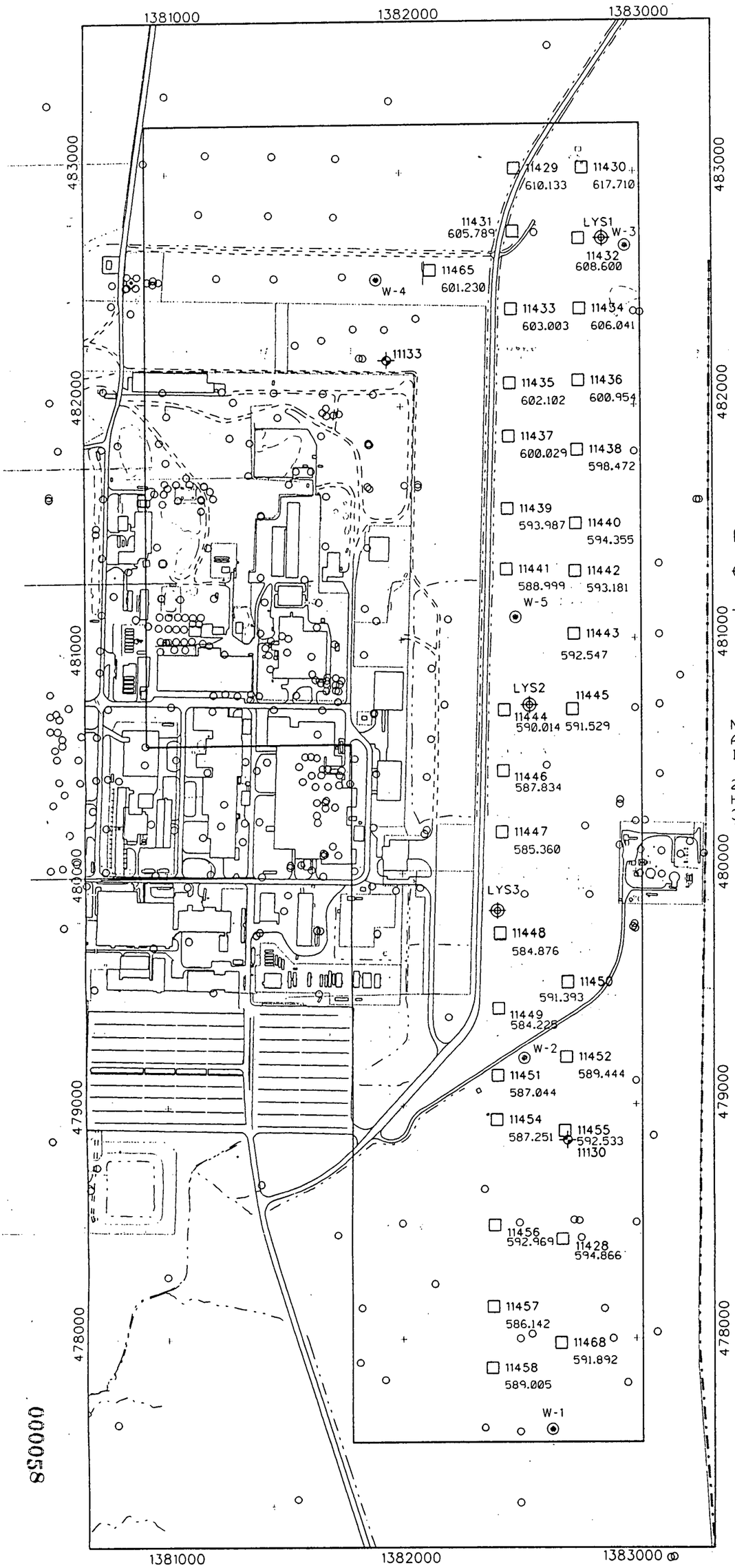

EXISTING BORINGS WITH PROPOSED CONE PENETROMETER. NESTED LYSIMETER, AND NESTED PIEZOMETERS SAMPLING LOCATIONS

- ○ EXISTING BORING
- □ PROPOSED CPT'S
- PROPOSED NESTED LOCATIONS FOR 3 LYSIMETER
- EXISTING NESTED LYSIMETER
- PROPOSED NESTED LOCATIONS FOR PIEZOMETER

NOTE : 1 ALL PROPOSED LOCATIONS ARE SUBJECT TO CHANGE AS THE INVESTIGATOIN PROGRESSES.

2. ALL NESTED LACATIONS WILL HAVE EITHER 3 PIEZOMETERS OR 3 LYSIMETERS

SCALE

0 425 850

FIGURE 8-1

000058

6145

shows the approximate anticipated depth for the lysimeters. The proposed depth may be within the brown or gray clay.

The proposed lysimeter (TIMCO™ Deep-Sampling Cup or equivalent) is a 2-inch diameter vacuum/pressure soil pore water sampler as presented in Attachment III. The lysimeter allows water to enter a micro-porous cup at the instrument's base through capillary forces or vacuum. The cup is attached to an 18-inch PVC cylindrical body with full-depth riser and a PVC head. The head assembly attaches to the riser and connects sample and pressure ports to the lysimeter via 1/4-inch nylon tubing. The lengths of the nylon tubing extend from the lysimeter body through the riser head at the surface and are used for vacuum extraction and pressure sampling. The sample tube extends from the head through the lysimeter to a point just in contact with the inside base of the lysimeter. The vacuum extraction tube extends into the lysimeter to a point approximately 3 inches below the inside of the cap.

Prior to installation the lysimeter and associated tubing will be decontaminated and installed according to manufacturer's specifications and SCQ procedures where applicable. After lysimeter and nylon tube decontamination, the ends of the tube will be clamped off at the surface to avoid the inadvertent introduction of foreign material into the tubing. The lysimeter components will then be assembled and installed with a full-depth, 2-inch PVC riser screwed on to the lysimeter body to house the nylon tubing. The tubing will be measured and cut to allow approximately 2 feet of stick-up at the surface. A 3- to 6-inch-thick slurry of silica flour and distilled water will be tremied into the open borehole. However, prior to making the slurry mixture the silica flour will be sampled and analyzed for total and isotopic uranium. This will be conducted at a rate of one sample per on-site nest for a total of three samples. An indicator (such as bromide) will be added to the water that is used in

TABLE 8-8a

PROPOSED LYSIMETER DEPTHS

Location	Depth (feet)*
Location 1	
11482	7
11483	35
11484	55
Location 2	
11485	7
11486	35
11487	55
Location 3	
11488	7
11489	35
11490	55

* Dependent upon geological conditions

slurry production so that the influence of the added water on the sample can be assessed. The lysimeter and riser will be gently lowered into the boring and secured at the surface to prevent floating.

Additional slurry will be placed 2 to 4 inches above the top of the ceramic tip of the lysimeter. At that point, 80/100 mesh sand will be poured to a minimum of 3 to 6 inches above the top of the lysimeter, followed by a column of Volclay grout to within 3 feet of the surface, then a bentonite seal. This grout will be placed with a tremie line and will prohibit shallow water from draining into

the lysimeter zone. The lysimeter head will then be connected to the tubing. The same volume of water that was added to the slurry for the lysimeter installation will be purged from the lysimeter. Sampling will be initiated 48 hours after purging.

8.2.4.3 Lysimeter Sampling

Sample recovery from the lysimeter will be in accordance with manufacturer's instructions, general SCQ protocol and ASTM D4696-92. After satisfactory installation of each lysimeter, a vacuum hand pump will be attached to the pressure port of the lysimeter and used to lift the sample into the holding chamber of the lysimeter. Pressure should be gently increased until 9 psi is achieved to lift the sample into the holding chamber of the Deep-Sampling Lysimeter.

After installation and purging there will be a total of four rounds of samples collected. The first three rounds, which will be approximately five days apart, will be analyzed for bromide, calcium, and magnesium. The results of the analysis will be plotted to determine when or if the bromide is reading 0 ppm, which is background, and when or if the calcium and magnesium concentrations equilibrate. Depending on the results, it may be determined that additional purging of the lysimeters be conducted to obtain equilibrium before collecting the final round of samples. This final round, which will be at equilibrium, will be analyzed for total uranium, isotopic uranium, bromide, calcium, magnesium, alkalinity, nitrates, and sulfates. One tritium sample will be collected from the shallowest lysimeter from each on-site nest for a total of three. It is anticipated that the volume of water collected from the lysimeters may be too small to conduct all of the aforementioned analyses. Therefore, samples will be collected on subsequent days with the following prioritization:

- On-Site Locations
  Total Uranium, Istopic Uranium, Tritium, Bromide, Calcium, Magnesium, Alkalinity, Nitrate, Sulfate
- Off-Site Locations
  Total Uranium, Isotopic Uranium, Titium, Bromide, Calcium, Magnesium, Alkalinity, Nitrate, Sulfate

Bromide will be analyzed as it was added to the slurry and will assist in determining when the lysimeter has reached equilibrium. Calcium and magnesium occur naturally and will be analyzed to assist in determining lysimeter equilibrium. Since demineralized water will be used in the slurry for installation, the calcium and magnesium concentrations are anticipated to rise until they equilibrate, and at this point it can be assumed that the lysimeters have reached equilibrium. Uranium analysis will be conducted so a comparison can be made with the previously installed lysimeter uranium concentrations. This will assist in determining a potential background uranium concentration for lysimeters. Tritium will be collected and analyzed to determine the age of the water in the vadose zone. The other analytes analyzed will be used in a comparison with the general chemistry of the perched groundwater, which will be collected in the proposed wells for this investigation.

In addition to the sample collection, field measurements for pH, total suspended solids, total dissolved oxygen, and temperature will be taken.

All samples and measurements will be collected, handled, documented, shipped, and validated according to SCQ protocol.

During the drilling of the lysimeter installation soil samples will be collected described according to ASTM D2488 and archived. Soil samples will be collected from the interval selected for placement of the lysimeter and analyzed for total uranium, isotopic uranium, TCLP uranium, TCLP isotopic uranium, moisture content, and grain size (see Table 8-1). The uranium analysis will assist in, determining the vertical and horizontal extent of urnaium contamination and the solubility of detected uranium..

All samples will be visually described, and all sample collection points will be surveyed to define the surface elevation and the northing and easting location.

In addition to sampling the newly installed lysimeters, lysimeters 11132, 11133, 11130, and 11131 will be samples for total uranium, isotopic uranium, calcium, magnesium, alkalinity, nitrate, and

sulfate.

8.2.5 New Well Installation

8.2.5.1 Objectives

There are 15 wells that will be installed as part of the Pre-design investigation. There will be five nests with three wells each. The obectives of these wells are to (1) identify interbedded and interconnected granular material in the till, (2) verify existing uranium contamination in the till, (3) the solubility of uranium present in the till, (4) and lateral and vertical perched groundwater gradients.

8.2.5.2 Well Installation

The wells will be installed using a Rotasonic™ drill rig. Continuous samples will be collected for archive in the Rotasonic™ barrel or in advance of the auger, through the till to an approximate maximum depth of 30 feet. No boring is proposed to penetrate through the till into the regional aquifer. Wells will be completed using two-inch diameter, 316 stainless steel riser and .010-inch slotted screen 2 to 5 feet in length across the perched water interval. Filter pack will be well-sorted quartz sand of 20-40 mesh (medium). Wells will be developed after the grout surface seal has cured per the SCQ requirements.

The screening interval will be determined by identifying the largest interval of granular material in the Rotasonic™ core sample in the perched groundwater zone.

8.2.5.3 Chemical Sampling of Water and Soil From the New Wells

Groundwater sampling will be conducted after developing the newly drilled wells. Equipment may include but is not limited to bailers, surge blocks, pumps and hoses. All wells will be developed to achieve turbidity-free water (<5 NTU), but no less than five times the standing water in the well. Parameter specific and general sample collection procedures will be conducted according to the SCQ and RI/FS QAPP. Water levels will be recorded in all proposed new and existing wells prior to

sampling to establish baseline information; levels will again be measured in all new and existing wells at the close of the project. Field measurements of water temperature, pH, conductivity, total suspended solids, and dissolved oxygen will be taken and recorded. One round of samples will be collected and analyzed at a contract laboratory for alkalinity, carbonates, calcium, magnesium, nitrate, phosphates, sulfate, isotopic uranium, total uranium, and tritium.

8.2.5.4 Groundwater Level Measurements From New Wells

Groundwater level measurements from wells for each round will be collected within a 24-hour period of consistent weather conditions to minimize atmospheric and precipitation effects on groundwater levels. In addition, groundwater levels will be recorded for all new wells at the time of completion and after well development. Section K.4.2.1 of the SCQ outlines the procedure for taking water level measurements. All measurements will be recorded to the nearest 0.01 feet. All wells will be surveyed according to SCQ protocol, and their locations added to the Sitewide Environmental Database.

8.2.6 Other Sampling Activities

Groundwater samples will be collected from a representative contaminated groundwater well from the Plant 2/3 area, and a representative clean (background) groundwater well closes to or in the study area. A minimum of 20 gallons of groundwater will be collected from each well. The groundwater will be placed in containers with a minimum of air in the container. This water is intended for use in the K_d study.

8.3 FIELD METHODS

8.3.1. Cone Penetrometer Testing Method.

See Attachment VIII for the complete ASTM D3441-86 method. In summary, truck mounted hydraulic pushing equipment is used to push a 1.5-inch diameter steel rod into the ground. Pressures, up to 40,000 pounds, are used to push the rods while end bearing resistance and friction resistance are measured by transducers located at the tip. Rate of penetration is maintained constant at 2 to 4 feet per minute while the resistance is recorded by data logger equipment in the truck.

The ability of the CPT to define shear strength and lithological contacts will be assessed by collecting CPT data adjacent to existing borings where geotechnical data are available. Precision of the CPT will be assessed by conducting at least two pushes of the cone penetrometer side by side. The mechanical/electrical precision for the ASTM method is stated to be ± 5 to 10 percent in end bearing resistance and 10 to 20 percent in friction resistance. This range of variance is acceptable in the calculated shear strength since a safety factor of 1.5 to 2 is usually applied to these data.

The report from the penetrometer will include lithological interpretations based upon the shear strength encountered. The CPT holes will be abandoned by filling them with a non-shrinking (Type K) portland cement grout (Attachment VI).

8.3.2 Rotasonic™ Drilling and Sampling

Rotasonic™ drilling is different from conventional drill methods, and is currently not described in SCQ. The drill energy comes from an oscillator that imparts vibrational force directly to the slowly rotating drill string. This drilling method will be used for collecting samples for geological descriptions, and for lysimeter and well installation.

The sample barrel is first advanced 5 to 10 feet into the soil profile. The sample barrel is then disconnected and an override casing is attached and drilled over the sampler barrel. During this process the annular space between the casing and sampler is lubricated with water to flush any cuttings. Once the casing is overdrilled to the level of the sample barrel, the casing is disconnected and the sampler barrel pulled back. The sample is then extruded from the sample barrel into plastic sheaths and given to the geologist for lithological description and sample archiving. A decontaminated sampler is then attached and the process repeated. The liquid that is introduced as a lubricant does not contact the cored sample, which is in all cases collected ahead of the override casing.

As the Rotasonic™ drill tools penetrate the soil medium, the soil particles cannot vibrate in unison with the drill steel. The individual soil particles vibrate in random directions and fluidize. This

greatly reduces the friction against the drill pipe and allows the soil to move aside. This only occurs within about 1/8 inch from the side of the drill steel. If the medium being penetrated is clay this condition is reversible once the sonics are shut off. This means that a casing, once sealed in a clayey medium, will be effectively sealed once the vibration stops. This phenomenon has allowed the use of multiple override casings to "seal" off upper aquifers or contaminated zones with the Rotasonic™ system. The dual casing capability will reduce the chance of cross-contaminating perched groundwater layers in this clay.

All casings are retrieved and decontaminated as specified for well casings in accordance with the SCQ. This drilling method will be used for well installation and lysimeter installation, and possibly conducting lithologic discription sampling for calibratin cone pentrometer data.

Soil samples collected from Rotasonic™ drilling will be visually described and used for chemical isotopic, and for K_d analysis.

8.3.3 Subsurface Soil Sampling

Soil borings not using the Rotasonic™ method will be drilled using a truck-mounted hollow-stem auger drill. Soil samples will be collected by split spoon or Shelby tube type sampler. After drilling and sampling is complete, each boring will be plugged with a non-shrinking (Type K) portland cement (see Attachment VI) grout from the bottom to surface through the hollow stem auger or via a tremie pipe; after grout has cured, a minimum of a 12-inch cement plug will be placed in the hole.

Continuous samples will be collected in advance of the hollow-stem auger described above, from six inches below surface to planned total depth and will be described in the field according to ASTM D2487. All samples will be field screened with beta/gamma and photoionization detectors, andalues recorded. A selected number of soil samples will be sent to the laboratory for chemical and geotechnical analyses (see Section 8.2.10).

8.3.4 Waste Handling/Disposal

During the performance of this field work, wastes in the form of drill cuttings, and decontamination wastes will be generated. Drill cuttings will be field screened using a geiger-müller and P.I.D. probes to assure that the cuttings are uncontaminated. These cuttings will be placed into clean 55-gallon drums during boring operations. After the borehole has been grouted the drummed cuttings will be emptied in the area of the boring and spread over the ground surface.

Decontamination of drilling and sampling equipment will be performed at the Drilling Contractors Decontamination Area. Fluids and any solid materials generated will be handled in accordance with the normal operation of that facility's contamination treatment/control devices. Well-sampling purge water and decontamination water will be placed in the FEMP General Sump.

8.3.5 Project Surveying

Land surveying will be performed at all cone penetrometer and drilling locations. Surveying will be performed by a Registered Professional Land Surveyor. All surveyed locations will be accurate to the nearest 0.01 feet elevation accuracy. Survey points will be located to within 0.5 feet accuracy and integrated into the existing FEMP Geographic Information System (GIS), and incorporated into the site data base.

8.4 GENERAL SAMPLING REQUIREMENTS

8.4.1 Field QC Samples

Field QC samples will be collected during the Operable Unit 2 Pre-Design Investigation. The QC sample types and rationale for selection follow:

- Field blank samples will be prepared for every round of groundwater samples and analyzed for the same target analytes specified for the field sample collected during the sampling event. The frequency of field blanks is based on the total number of rounds of groundwater samples collected from each Operable Unit 2 subunit. A field blank sample is prepared at the sampling site by the field team by pouring deionized/organic free water into the appropriate sample containers specified in Table 8-8.

- An equipment rinsate sample will be collected for every round of water samples and every 5 soil samples, following decontamination of the sampling equipment. The sample will be obtained by rinsing clean soil sampling with deionized water and collecting the rinsate for analysis.

- Duplicate water samples will be collected at a frequency of 1 per every round of groundwater sampling. These samples should be assigned a unique sample number and sent to the laboratory as a blind sample. No duplicate soil samples will be collected due to the lack of an effective field compositing technique which would produce meaningful data where discrepancies could absolutely be considered a laboratory precision problem.

- Container blanks will not be included in the QA samples since containers used for sampling activities are pre-cleaned by the manufacturer and have a certificate of analysis for each lot of containers.

8.4.2 Alternate Sampling Procedures

The implementation of alternate sampling procedures could be necessary if any unanticipated problem developed during the field investigative effort. Alternate sampling procedures, or deviations, consist of either work plan variances or work plan non-conformances.

If it becomes necessary to deviate from a sampling standard operating procedure, such a deviation will be handled in the following manner:

1. The field sampling technician or geologist will identify the need to deviate from the sampling plan or procedure.

2. The technician will bring the problem to the attention of field crew management and make recommendations about how to best proceed with sample collection with minimal impact to the existing sampling procedures and project data quality objectives.

3. Possible solutions and the impacts of the solutions on the project data quality objectives will be determined.

4. A Variance Request Form (example in Attachment IV) will be implemented which describes the nature of the variance, the need for the variance and how variation from the Sampling and Analysis Plan will minimize or have no impacts to the project data quality objectives.

5. QA will evaluate and approve the Variance Request.

6. The approved Variance Request Form will become a part of the overall project historical file, and will be reported in the final project report.

Variance approvals will, in most instances, be obtained prior to the actual performance of the variance in the field. However, depending on the situation, prior variance approval may not be feasible due to practical aspects associated with the field work being performed.

Work plan non-conformances are defined as field or laboratory activities which have been completed, but are subsequently found to not have been performed according to the work plan. A non-conformance may have a significant impact on the usability of field- or laboratory-derived investigation results. Resolution of a project non-conformance will be the responsibility of the Operable Unit 2 Project Manager.

8.4.3 Sample Equipment and Materials

All environmental media samples will be collected with equipment which is functional, designed for the specific purposes of the sampling event, and properly decontaminated. Sampling will be accomplished with equipment which is constructed of nonreactive materials.

Sampling containers will be composed of materials which are commonly used for the type of media to be sampled. All sample containers will be of the volume necessary for laboratory analysis purposes. Attachment V lists equipment typically used per type of sampling activity.

8.4.4 Equipment Decontamination

All drilling and media sampling equipment will be decontaminated to Level II in accordance with Appendix K of the SCQ specifications, and according to procedural memos issued by the Radiation Control Department.

8.4.5 Sample Volume, Containers and Preservation

Sample containers will be pre-cleaned by the manufacturer and will be accompanied by a certificate of analysis. The sample container types and preservative requirements are specified in the FEMP SCQ and are summarized in Tables 8-7 and 8-8 for solid and aqueous matrices, respectively. Sample volumes will be consistent with the contract laboratory requirements.

8.4.6 Sample Collection Documentation

Both surface and groundwater samples collected in the field are documented on the Sample Collection Log, and Water Quality Field Collection Report forms. An example of these forms is shown in this report as Attachment V; however, some forms are being revised and the latest revision will be used.

The collection of soil and sub-soil materials are documented on the following forms:

- Sample Collection Log
- Visual Classification of Soils
- Subsurface Soil Sample Collection Log

Examples of these forms are shown in Attachment V.

In addition to these forms, daily field activities are recorded on the Field Activity Daily Log form. This form is included in Attachment V of this report.

8.4.7 Sample Collection Reports

No specific sample collection field reports are proposed for this project. Rather, the information contained in the field forms specified in Section 8.4.6 of this report serve as the basis for documenting all significant aspects of the sample collection activities.

Upon completion of the project, all significant task related information, including copies of field forms and laboratory related forms, including analytical results of samples taken, are included in a Task Closure Report. This report is initiated by the SC/DM Department of the Environmental Division, and will be sent to Operable Unit 2 for their records.

8.5 SAMPLE MANAGEMENT

8.5.1 Sample Identification and Labeling

A unique six-digit sample number will be assigned to each sample collected by Environmental Monitoring. Each sample container will also be affixed with a sample label containing, at a minimum, the information specified on Form 7-2, Appendix B of the FEMP SCQ.

8.5.2 Sample Chain of Custody Records and Field Data Documentation

Sample custody procedures as outlined in the FEMP SCQ will be observed throughout the sample handling process from field collection to shipment or delivery of the samples to the laboratory. The Site-Wide Analysis Request/Custody Record (SAR/CR) form will be completed for all samples delivered to the on-site sample processing laboratory.

In addition to the custody records, a Sample Collection Log will be completed which summarizes all samples collected from a single borehole or well. A Groundwater Quality Report will be prepared for each well sampling event to document the well purge data and groundwater conditions prior to sample collection. A Visual Classification of Soils Form and Well Installation Diagram will be completed for soil borings and well installations when appropriate. Furthermore, all field investigation work is documented in detail on a daily basis using the Field Activity Daily Log Form.

8.6 FIELD EQUIPMENT METHODS

8.6.1 Calibration of Field Equipment

Field equipment to be used during this investigation is divided into the categories of health and safety monitoring, and field screening and monitoring. At a minimum, all equipment will be operated and calibrated according to the equipment manufacturer's specifications. All instruments are calibrated once per week, or once per day, depending on the manufacturer's specifications. Written logs of equipment calibration are maintained by the appropriate personnel in charge of performing the instrument calibrations.

Health and Safety monitoring equipment consists of the following instruments:

HNu PI-101 Photoionization Detector - equipped with a 10.2 EV lamp. This instrument is calibrated daily using isobutylene gas as a standard. During use, in order to spot check the instrument for proper operation, a hydrocarbon-based felt-tipped pen is commonly used. However, this practice is not a substitute for routine instrument operation checks.

Ludlum Model 12 Alpha Meter - equipped with a pancake probe. The instrument is calibrated against a background concentration. If the background concentration exceeds 2 counts per minute (cpm), then the instrument is not used. The instrument is calibrated to a known standard once per week.

Ludlum Model 2 BetaGamma Meter - This instrument is calibrated once per week against a background standard. If, during routine use, the operator notes that the background concentration exceeds 300 cpm, then the instrument is not to be used.

Ludlum Model 19 Micro-R-Meter - This meter is calibrated to a known standard once per week.

Ludlum Model 9 Ion Chamber - This instrument is calibrated to a known standard once per week.

Field Screening and Monitoring equipment consists of the following instruments:

HNu PI-101 Photoionization Detector - equipped with a 10.2 EV lamp. This instrument is calibrated daily using isobutylene gas as a standard. During use, in order to spot check the instrument for proper operation, a hydrocarbon based felt tipped pen is commonly used. However, this practice is not a substitute for routine instrument operation checks.

Orion Model 250A pH Meter - This instrument is calibrated daily, and is compared to known calibration standards at least twice prior to each reading. The buffer solutions typically used for

calibration are pH 4 and pH 7 Standard Units.

YSI Model 33 S.C.T. Conductivity Meter - The conductivity meter is calibrated daily to a known standard.

Solonist Water Level Indicator - There is no known standard to which a water level meter is calibrated. The meter is, more than calibrated, maintained by ensuring that it is in proper operation, and that the batteries are charged.

Hach Turbidity Meter - This instrument is calibrated to a known standard on a daily basis.

YSI Model 51-B Dissolved Oxygen Meter - This instrument is calibrated to a known standard on a daily basis.

ESP-1, Model 141, SPA-3 Sodium Iodine Scintillation Detector - This instrument is use for radiation surveying and will be calibrated to a known standard on a daily basis.

8.6.2 Documentation of Calibration

Separate logbooks are kept for each type of instrumentation. The logbooks contain a history not only of the instrument calibration but also of any unusual or irregular problems noted during the use of that particular instrument. Four separate documents are used to record calibration of instruments. Attachment V contains examples of the calibration documentation.

The forms are labeled as follows:

- Water Quality Field Collection Report
- Weekly Calibration Log
- Use, Calibration, and Maintenance of the HNu PI 101
- Instrument Baseline Data Sheet

8.7 ANALYTES OF INTEREST

The analytes of interest have been developed on "time of travel" needs and what would be considered the best tracer analytes. The analytes of interest are total uranium, isotopic uranium, TCLP uranium, chloride, bromide, fluoride, tritium, nitrate, sulfate, carbonate, phosphate, and colloids.

8.8 LABORATORY METHODS

8.8.1 Analytical Methods

The contract laboratory will adhere to the requirements of the SCQ which is currently under revision. EPA CLP or SW-846 requirements will be followed for inorganic analyses. Analytical methods for radioisotopes and K_d will follow performance based criteria cited directly by the SCQ and the procedures described in section 8.8.2. In all cases the laboratory shall generate a CLP data package, or equivalent for non-CLP analytes such as general wet chemistry. The CLP data package will be validatable to ASL D.

8.8.2 K_d Analysis

The K_d Study is being performed to determine how natural species of uranium in groundwater and soil partition between phases. To obtain the most representative results, natural materials will be used whenever possible. This includes natural soils from the location of concern, natural groundwater contaminated with uranium, and natural groundwater without contamination.

Fourteen standard adsorption tests and desorption tests will be performed on soil samples and contaminated groundwater. The fourteen soil samples will be collected from seven borings. Seven soil samples will be collected in the brown clay and seven in the grey clay. Fourteen soil samples will be collected, one from each soil location, and sent off site for total and isotopic uranium analysis. Contaminated groundwater will be collected from Plant 2/3 perched groundwater area, and clean groundwater will be collected from the pre-design study area wells and a sample of each will be sent off site for total and isotopic uranium analysis.

The disposal facility will be constructed over clean till, so the partitioning of uranium will occur first

from potentially contaminated leachate seeping through the bottom of the facility liner. The contaminated groundwater is intended to represent the leachate as it leaves the disposal facility. Speciation studies have shown that despite the original nature of the waste or source material, uranium, therefore, speciates into two predominant forms in groundwater, carbonate, and phosphate.

After the adsorption tests are completed, the soil from the adsorption tests will be placed into a new reactor with clean groundwater to assess it desorption characteristics. This test will represent conditions where contaminated leachate moves through the till allowing the soil to adsorb a fraction of the uranium, then cleaner leachate moves through, creating an environment where uranium can desorb from the soil back into the groundwater.

A number of factors affect the K_d in natural conditions; groundwater-to-soil ratio, the sorption isotherm, pH, dissolved oxygen, temperature, permeability of the same soil, and others. During the test pH and temperature factors can be controlled by keeping them constant near the in situ levels.

The in situ groundwater-to-soil ratio is no greater then the porosity of the soil, which is the ratio of the volume of soil voids to the volume of soil. This ratio is typically between 20 and 40 percent. The ratio of soil to groundwater in the standard K_d method used at Fernald is 8.75 (875 percent). The groundwater volume is large in practice because it produces a conservative result and it makes sampling of the solute possible during the test. In order to determine the impact of the groundwater-to-soil ratio on K_d levels, two separate calibration tests will be run. These calibration tests will consist of soil samples split from two grey clay soil samples. These calibration tests will include a groundwater-to-soil ratio of 0.50 (50 percent), only slightly larger than in situ conditions. These tests will be run without sampling, equilibrium will be determined by a duplicate test conducted in parallel. The test will be conducted exactly as the normal test, but samples will not be drawn. The container will be opened whenever samples are taken from the duplicate test. A final sample will be collected from the calibration tests when the duplicate test reaches equilibrium. The desorption test will be run for the two soil samples in the same way with a 0.5 clean groundwater-to-soil ratio. A final water and soil sample will be collected at the end of the desorption test. The results of this calibration test

can then be compared to the duplicate test to see what impact the groundwater-to-soil ratio had on the K_d determinations.

The sorption isotherm describes the transfer of a product from liquid to soil under different concentrations in solution. The amount of product adsorbing from solution to soil will vary depending on the amount of product available in solution. The relationship is generally assumed to be linear, although many studies have indicated a non-linear relationship. The sorption isotherm can be determined by conducting a series of tests with different concentrations of product in solution. The results of the tests can be plotted on an initial versus final solute concentration graph. Each final solute concentration is plotted against its initial solute concentration, and all the tests are plotted on one graph. The resulting curve represents the sorption isotherm. Equations are available to determine the K_d under linear and non-linear sorption isotherm. Once the sorption isotherm is determined, more exact equations can be used to determine K_d. In order to determine the sorption isotherm, six tests will be run with different initial solute concentrations. The initial concentration will be varied by diluting contaminated groundwater with clean groundwater to achieve the desired initial concentration. The tests will be conducted using the standard procedure and the results will be plotted to determine the sorption isotherm relationship. The six sorption isotherm tests will include four of the seven grey clay soil samples split from the grey soil samples. The groundwater concentration will be varied by combining uranium contaminated groundwater with clean groundwater.

The permeability of the soil can be maintained by keeping the samples as undisturbed as possible. Standard K_d practices require the soil samples to be dried, crushed, sifted, and agitated through the test. In an effort to determine the impact that these practices have on K_ds, two duplicate tests will be run in which the soil will not be disturbed or agitated but allowed to sit in contact with groundwater as in natural conditions. The two duplicate samples will be split from two of the seven grey clay soil samples. The test will be performed identically to the standard method except for the agitation of the sample. The results of this duplicate test can then be compared to the agitation method to bracket the conservatism inherent in the standard procedure.

The dissolved oxygen factor is complicated to duplicate because dissolved oxygen is limited at depth in the soil. In order to reproduce the in situ dissolved oxygen conditions, the K_d study would have to be performed in a closed reactor with as little dissolved oxygen as possible (possibly in a nitrogen gas environment). This condition is difficult to achieve because of the required sampling that takes place during the test. One solution to this is to run calibration tests alongside the normal K_d tests. The calibration tests will be set up in the same manner as the normal test, but the reactor will be sealed until the completion of the test. The two calibration samples will be split from two of the seven grey clay samples. Equilibrium will be determined using a duplicate test run in the normal manner. A sample will be collected at the end of the test when the duplicate samples achieves equilibrium. The results of the calibration test would then be compared to the normal test results to determine the affect of dissolved oxygen on the K_d study.

Table 8-9 and 8-10 summarize the K_d tests to be performed.

8.8.2.1 K_d Sample Preparation

For the 14 collected samples, the 400 grams (dry weight) of soil will be transferred to a 4.0 liter reactor without drying or crushing. Dry weight will be determined using a standard method on a portion of the soil sample. Pre-test agitation of the soil should be kept to a minimum. A 3500 ml sample of groundwater contaminated with a known amount of uranium will be added to the container at a pH consistent with perched groundwater pH levels (6.8 to 8.0). The pH level will be adjusted with nitric acid or calcium hydroxide.

Two in situ groundwater-to-soil ratio tests will be performed in parallel with two duplicate normal tests. In these two reactors, only 200 ml of groundwater will be added.

Four diluted groundwater tests will be conducted in parallel with four normal duplicate tests. The diluted groundwater will consist of 3500 ml total solution, but 0.75, 0.5, 0.25, and 0 fractions of contaminated groundwater to clean groundwater.

TABLE 8-9

TESTS TO BE PERFORMED FOR K_d DETERMINATION

K_d Tests to Be Performed
7 brown clay adsorption/desorption tests - Standard methods, 100% contaminated water during adsorption test.
4 grey clay adsorption/desorption tests - Standard methods, 100% contaminated water during adsorption test.
3 grey clay adsorption/desorption tests - Standard methods, one 75% contaminated water, one 50% contaminated water, and one 25% contaminated water during adsorption test.
2 grey clay (split sample) adsorption tests - standard methods except that only 200 ml of 100% contaminated groundwater will be used and no sampling during study. Tests should be performed in parallel with standard grey adsorption tests that correspond with the split sample locations to determine equilibrium conditions.
2 grey clay (split sample) adsorption tests - standard methods, clean groundwater used.
2 grey clay (split sample) adsorption tests - standard methods except that no agitation of the sample will be performed. Disruption of the soil will be kept to a minimum.
2 grey clay (split sample) adsorption tests - standard methods except that only the reactors will be sealed and remain unopened until the end of the test. 100% contaminated groundwater will be used. No sampling will be conducted during study. Tests should be performed in parallel with standard grey adsorption tests that correspond with the split sample locations to determine equilibrium conditions.

TABLE 8-10

SOIL AND WATER ANALYSES FOR K_d DETERMINATION

Off Site K_d Sampling Program		
Initial Sampling	Post Adsorption Sampling	Post Desorption Sampling
14 soil samples, 7 brown and 7 grey, analyzed for total and isotopic uranium	7 water samples from the brown clay reactors for total and isotopic uranium	7 water and soil samples from the brown clay reactors for total and isotopic uranium
2 groundwater samples, one contaminated and one clean, sampled for total and isotopic uranium	7 water samples from the grey clay reactors for total and isotopic uranium	7 water and soil samples from the grey clay reactors for total and isotopic uranium
	2 water samples from the in-situ groundwater-to-soil ratio reactors (split grey clay samples) for total and isotopic uranium	
	2 water samples from the clean groundwater baseline reactors (split grey clay samples) for total and isotopic uranium	
	2 water samples from the no agitation reactors (split grey clay samples) for total and isotopic uranium	
	2 water samples from the closed reactors (split grey clay samples) for total and isotopic uranium	
14 total soil, 2 total water	22 total water	14 total soil, 14 total water

When the first test is completed with contaminated groundwater the reactor will be drained and the solids will be centrifuged. The solids will then be transferred to a clean reactor and 3500 ml of background groundwater will be added. The pH will be adjusted as in the first test. The two in situ groundwater-to-soil ratio tests will only have 200 ml of clean groundwater added to them.

8.8.2.2 K_d Sample Mixing

The samples will be placed in a rotating tumbler and mixed continuously until completion of the testing. The tumbler shall be operated at 29 +/- 2 rpm. Two reactors will be left untumbled throughout the test with a minimal soil disturbance.

8.8.2.3 K_d Collection of Samples During Testing

Samples of leachate will be collected after stopping the tumbler for a sufficient time period (minimum of 10 minutes) to allow the solids to settle. A volume of the leachate will be decanted from the reactor and filtered through a 0.45 micron filter paper. The volume of decant removed will be based upon the requirements for analytical testing (approx. 2 ml). After removal of the decant, 20 ml of pH adjusted water will be added back to the reactor. Any solids transferred during the separation step will be returned to the reactor.

Intermediate samples will be collected at approximately 72, 144, 168, 240, 288, 360, and 384 hours following initiation of the reaction and analyzed at the FEMP laboratory for total uranium. The reaction may be stopped earlier if the data indicate that equilibrium conditions between the soil and liquid have been achieved. Equilibrium will be determined by maintaining a plot of concentration versus time for each reaction.

Two reactors will remain untested during the program. The reactors will remain sealed. Equilibrium conditions will be determined by duplicate tests run in the standard method. Final samples will be collected from the two sealed reactors when the duplicate tests indicate equilibrium.

After the results indicate an equilibrium condition, a final solution sample will be collected and split

for analysis by both the FEMP laboratory and an off-site laboratory. The final sample will be analyzed for total and isotopic uranium. Twenty-two solution samples will be collected at the end of the adsorption testing. If a sample does not reach equilibrium after 384 hours, a decision of whether to terminate the testing will be made.

Identical batch testing procedures will be followed for the second test. At completion of the second batch test, a water and soil sample will be collected from the tumbler and split for analysis by both the FEMP laboratory and an off-site laboratory. These final samples will be analyzed for total and isotopic uranium. Twenty-two solution samples and 22 soil samples will be collected at the end of the desorption testing.

8.8.3 Laboratory Performance Requirements

Analytical performance requirements shall be used as guidelines for evaluating laboratory capability to provide specific analytical services to FEMP. Audits shall be performed to verify laboratory performance using the performance evaluation sample results specified in Appendix E of the SCQ.

8.9 SAMPLE ANALYSIS AND VALIDATION

Sample analysis and validation will be performed in accordance with the guidance and requirements contained in the FEMP SCQ. This task consists of sample management; chemical and radiological analysis; quality control; and data reduction, validation, and reporting. These subjects are discussed in detail in the SCQ. Geotechnical samples will not be validated and will comply with ASTMs.

Sample management and control will be in accordance with Section 7 (*Analytical Laboratory Sample Custody*) of the SCQ. Sample custody will be maintained and documented from the time of collection through analysis. Appropriate records will be maintained in the chain-of-custody process for sample tracking and control during shipment.

Analysis of samples and laboratory analytical procedures will generally be in accordance with Section 9 (*Analytical Procedures*) of the SCQ in conjunction with Appendix E of the SCQ. For all chemical

analyses for which such methods exist, EPA-approved methods will be used as the FEMP method source. Where EPA methods do not exist, verified methods will be submitted to EPA for approval. Radiological sample preparation and analysis methods are specified in Appendix I of the SCQ.

Data reduction, validation, and reporting for each ASL will be in accordance with Section 2.3.3 (DQOs) of the SCQ. Numerical analysis, including manual calculations, mapping, and computer modeling, will be documented and subjected to QC and peer review. The Data Validation Plan is presented in Appendix D and the Data Management Plan presented in Appendix F of the SCQ.

Data validation is an independent and systematic assessment to determine if the sampling and analysis process met certain established criteria. The validity of a sample and the analytical information generated from the analysis of that sample are dependent upon various factors. The collection and examination of all significant information and data associated with the sampling and analysis process is essential for the validation process to be effective. This information and data is gathered from the scoping process through the final data archival or storage.

Once the samples are collected and sent to the appropriate laboratory for analysis, field information will be received by SC/DM to verify that all required field information is complete and accurate, and the information will be forwarded to Data Quality Management if the analyses generated for the task are either ASLs C, D, and/or E. Field records generated for ASL B analyses may also be forwarded to Data Validation, if the PSP has specified that this ASL data will require data validation.

The laboratory will then analyze the samples per the requirements set forth in the SAP. After the laboratory has analyzed the samples and verified that the quality of the data meets the requirements of the analytical method, and that all deliverables are included, the data will be delivered to personnel to perform the following tasks:

- Verify that all required deliverables have been received;
- Verify that contract performance requirements have been met. These contract performance requirements will be identified in the PSP;

- Enter data into the SED; and
- Copy data packages and deliver them to Data Validation personnel. The original of the data packages will be stored in a secure location.
- Confirm with an initial screening that the appropriate information is present;
- Log the package into a tracking database;
- Assign a priority rating for the data package from the Manager of Data Validation; and
- Ensure that all QC information required to qualify data is present and create a field data validation summary report with supporting documents which can impact qualification of data from the laboratory.

The appropriate laboratory data validation subgroups are then notified by the DVS group that the data package is ready for their evaluation. The data is then validated by the appropriate validation discipline group (e.g. organic, inorganic/conventional, and radiochemistry) according to the appropriate validation protocols. The data will be qualified, data validation summaries will be generated, and checklists will be added to the data package. The validated data packages will then be reviewed/approved by the Validation Group Coordinators and given back to the DVS group. In addition, the data qualifiers will be entered into the SED. The DVS group will assemble all reports and check lists into one data package, update the tracking data base, copy and file the validated data package, and send the validated data package to the DR&A.

Once the DR&A receives the validated data package from Data Validation, the validated data package will then be filed by the DR&A into a secure file while copies of the data results, summaries of the data validation, the DR&A cover letter and a listing of all other documentation available will be sent to Operable Unit 2.

SECTION 9

PRE-DESIGN INVESTIGATION SCHEDULE

ACTIVITY ID	EARLY START	EARLY FINISH	ORIG DUR	CHRG
DISPOSAL FACILITY: PRE-DESIGN INVESTIGATION				
Milestones				
RD11249	11OCT94		0	2CCS1
RD11259		9DEC94	0	2CCS1
RD11261	8NOV94		0	2CCS1
RD11301	16DEC94		0	2CCS1
RD11389	9JUN95		0	2CCS1
RD11401	31JUL95		0	2CCS1
Summary Activities				
RD11220	29AUG94	9DEC94	71	2CCS1
RD11224	11OCT94	24MAY95	154	2CCS1
RD11246	20JAN95	24OCT95	193	2CCS1
RD11280	16DEC94	30JAN95	29	2CCS1
Disposal Facility Pre-Design Investigation				
RD11230	29AUG94	30SEP94	24	2CCS1
RD11240	3OCT94	10OCT94	6	2CCS1
RD11245	11OCT94	22NOV94	30	2CCS1
RD11250	11OCT94	7NOV94	20	2CCS1
RD11260	8NOV94	9DEC94	21	2CCS1
RD11270	9NOV94	15DEC94	24	2CCS1
RD11290	16DEC94	22DEC94	5	2CCS1
RD11300	16DEC94	22DEC94	5	2CCS1
RD11310	27DEC94	30JAN95	24	2CCS1
RD11320	31JAN95	6FEB95	5	2CCS1

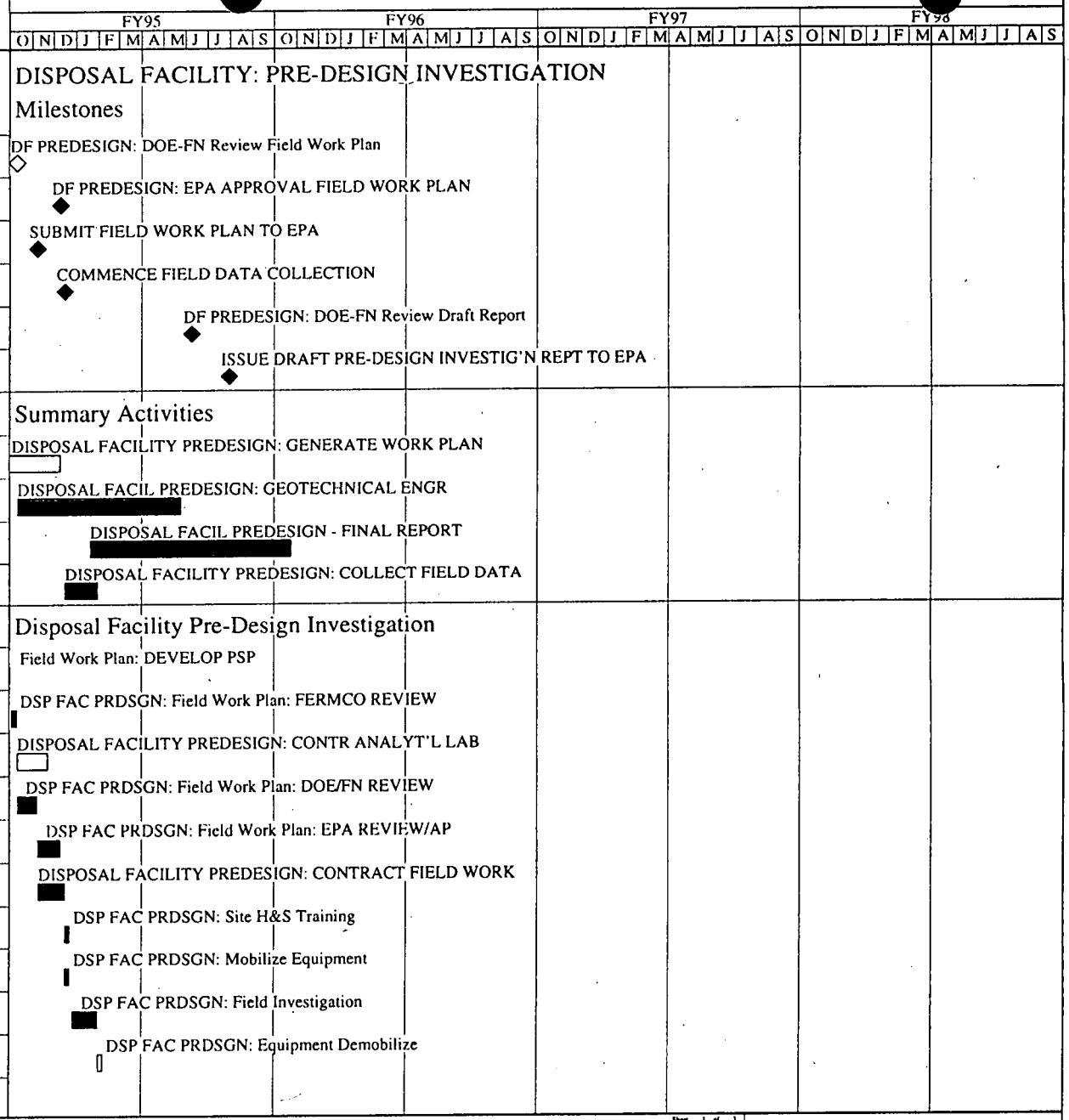

Plot Date 7NOV91
Data Date 2NOV92
Project Start 1JAN91
Project Finish 30CT01

Activity Bar/Early Date
Critical Activity
Progress Bar
Milestone/Flag Activity

(c) Primavera Systems, Inc.

2CCS DISPOSAL FACILITY PRE-DESIGN
CRU2 PROJECT CONTROLS
DETAILED FY95 BASELINE SCHEDULE

Sheet 1 of 1

Date	Revision	Checked	Approved

000085

6145

ACTIVITY ID	EARLY START	EARLY FINISH	ORIG DUR	CHRG
RD11325	11OCT94	24OCT94	10	2CCS1
RD11327	25OCT94	8DEC94	30	2CCS1
RD11330	12JAN95	28MAR95	53	2CCS1
RD11335	31JAN95	28FEB95	20	2CCS1
RD11337	1MAR95	4APR95	25	2CCS1
RD11340	3MAR95	27APR95	39	2CCS1
RD11350	4JAN95	18MAY95	95	2CCS1
RD11360	18JAN95	8MAY95	77	2CCS1
RD11370	20JAN95	24MAY95	87	2CCS1
RD11380	25MAY95	8JUN95	10	2CCS1
RD11390	9JUN95	29JUN95	15	2CCS1
RD11395	30JUN95	28JUL95	20	2CCS1
RD11400	31JUL95	25AUG95	20	2CCS1
RD11410	28AUG95	25SEP95	20	2CCS1
RD11420	26SEP95	24OCT95	21	2CCS1
RD11422	25OCT95	31OCT95	5	2CCS1

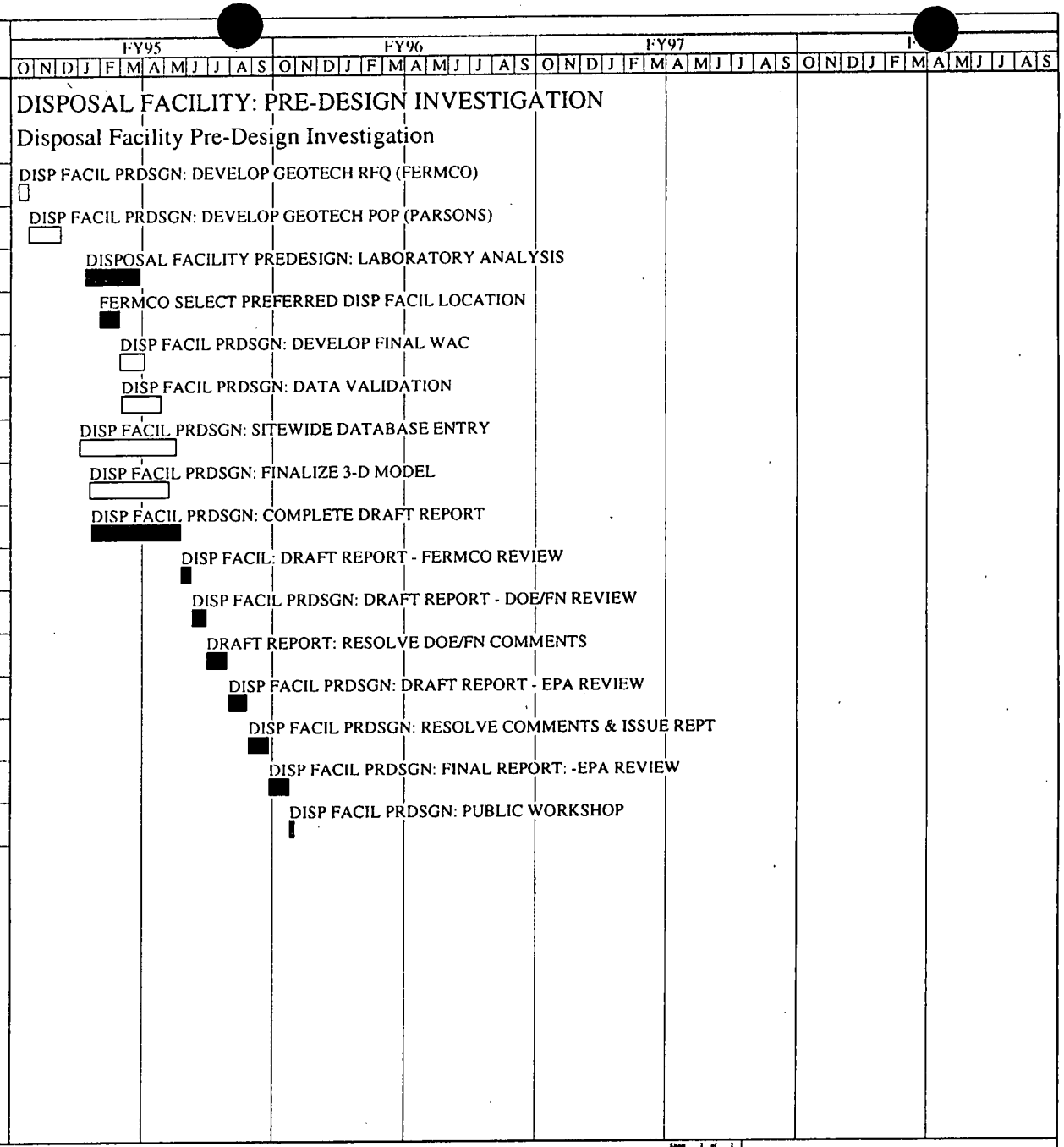

Plot Date 7NOV94
Data Date 2NOV92
Project Start 11JAN90
Project Finish 30CT01

(c) Primavera Systems, Inc.

Activity Bar/Early Dates
Critical Activity
Program Bar
Milestone/Flag Activity

F22A

Sheet 1 of 1

2CCS DISPOSAL FACILITY PRE-DESIGN
CRU2 PROJECT CONTROLS
DETAILED FY95 BASELINE SCHEDULE

Date	Revision	Checked	Approved

000086

6145

ATTACHMENT 1

PRE-DESIGN DATA QUALITY OBJECTIVES

Fernald Environmental Management Project

Data Quality Objectives

Title: Pre-design Field Investigation Geotechnical Borings

Number: GT-004

Revision: 0

Effective Date: 10/28/94

Contact Name: John Berretz

UNCONTROLLED COPY

Approval: _____ *Date:* 10/28/94
DQO Coordinator

Rev #	0				
Date	10/28/94				

DQO#: GT-004
Effective Date: 10/28/94

Data Quality Objectives For The Pre-design Field Investigation Geotechnical Borings

THE PROBLEM STATEMENT

CRU2 has been tasked to conduct the DOE Title I/Title II design and DOE Title III construction oversight for a proposed on-site disposal facility. This will require a pre-design field study to characterize the geotechnical properties of the potential area of the facility.

Using all available information an area for this pre-design study has been established, which is located on the eastern portion of the FEMP and would be sufficient for the layout of a facility capable of handling 8.8 million cubic yards of material. This study will investigate a portion of that area sufficient to contain 2.2 million cubic yards of material.

Existing information has been used to determine the uncertainties in the lithologic descriptions. The uncertainties are great enough to warrant collecting additional information. Therefore, the pre-design activity is being conducted to greatly reduce the uncertainties.

As one part of the pre-design study, geotechnical sampling will be conducted to determine the physical properties of the soils. This will assist in determining whether the area is suitable for the placement of the disposal facility. Some of the geotechnical information may be used for the subsequent detailed design. Also, total uranium and TCLP uranium samples will be collected and used for modeling.

THE DECISION

The information generated by geotechnical sampling is essential in determining the physical properties of the soil in the footprint of the proposed cell. The total uranium and TCLP uranium samples will assist in identifying desired chemical properties of the soil in the potential area of the disposal facility. Therefore, it is necessary to obtain this information to evaluate the location and to proceed with the design of the disposal facility both of which are pivotal to the remediation of the FEMP.

INPUTS THAT EFFECT THE DECISION

To produce the most effective disposal facility design and to adequately evaluate the location for the on-site disposal facility the geotechnical parameters total and TCLP uranium levels of the soil need to be known. The most favorable lithology will be that containing the least amount of sand, or preferably no sand. The sampling will be conducted in a manner to accurately determine the soil properties from the surface to approximately the bottom of the till. The soil samples will include undisturbed and disturbed samples for geotechnical analysis and uranium grab samples (see Table 1).

Areas of known surface soils contamination, as indicated by the OU5 RI Report, will be avoided. Suspect areas will be field screened prior to drilling operations to reduce the probability of encountering contamination. Also, perched groundwater is suspected to be contaminated in select locations, therefore, to prevent cross contaminating the regional aquifer the bottom of the glacial overburden (till) will be estimated from kriged surfaces and borings will terminate 4 feet above the estimated bottom of the till. After the borings are completed, they will be filled with expansive Type K grout.

The information gathered from the sampling is intended to be used by personnel experienced in conducting site investigation and disposal facility design.

BOUNDARIES OF THE STUDY

Sampling will occur in an area on the east boundary of the FEMP that measures approximately 2000 feet wide by 5300 feet long, with the long edge parallel with the east boundary of the site. Geotechnical samples will be collected from the brown clay (up to 15 feet below the surface) and the grey clay (up to 30 feet below the surface) using shelby tubes and split barrel samplers. Total Uranium and TCLP Uranium will be collected from the grey clay using split barrel samplers. An auger drill rig will be used to advance the shelby tubes and the split barrel samplers. The locations for taking these samples will more accurately be selected after a cone penetrometer phase has been completed, which will assist in determining the lithology of the study area.

Samples will be collected from an area selected from the cone penetrometer tests. The area will cover approximately 70 acres and with existing data it has been determined that 14 borings will be needed for the pre-design siting. This number of borings will provide adequate information, when used in conjunction with existing information, to adequately determine the geotechnical properties of the soil for siting purposes. Split spoon and shelby tube samples will be collected at five foot intervals to a maximum depth of 30 feet. The shelby tube samples will be collected for parameters that need undisturbed samples; e.g., vertical permeability, recompacted permeability, standard proctor, and Atterberg Limits. Split spoon samples will be collected for all of the other samples.

THE LOGIC STATEMENT

The results of the sampling will be included in the pre-design report, which will also include the cone penetrometer results and the time of travel results. If it is determined that a potential area exists for an on-site disposal facility, then that area will be defined and a more detailed design investigation will be conducted.

The information obtained from this pre-design investigation will primarily assist CRU2 in the layout and design of the disposal facility. Additionally, the information gathered from this sampling effort will be made available to both CRU5 and CRU3 to assist in their modeling efforts.

CONSTRAINTS ON THE UNCERTAINTY OF THE DECISION

A false positive error would indicate that the subsurface material has properties more protective than that selected for design. This could result from laboratory or analytical testing errors, misclassification of soil in the field or by missing a significant granular pathway during the field investigation. The consequences would be that the false positive would be discovered during subsequent geotechnical investigations, which are planned in conjunction with the final design activities or during construction. Another possibility is that the false positive would be discovered during post-construction monitoring. This would result in a reduced factor of safety or a design upgrade.
A false negative would indicate that the soil has unacceptable properties; therefore, creating the need for using off-site material or eliminating the possibility for an on-site disposal facility.

The impacts of a false positive (in order of importance):

1. cost
2. credibility
3. social
4. ecological

The impacts of a false negative (in order of importance):

1. cost
2. credibility
3. social
4. ecological

To minimize the possibility of errors, all of the procedures will be conducted by qualified personnel. The analysis shall adhere to the appropriate FEMP ASL Levels of quality control criteria as specified in the Site-Wide CERCLA Quality Assurance Project Plan (SCQ). The required ASLs for this study are presented in Table 2.

All samples collected are considered necessary for successful completion. However, in the event that a boring cannot be completed, a new boring will be started a minimum of 5 five from the previous unsuccessful boring. If a boring cannot be successfully completed, it is likely that results from other sampling locations will serve as an effective substitute.

All chemical analysis will require a "CLP-equivalent" data package format as a deliverable.

OBTAINING QUALITY DATA

Both geotechnical and chemical samples will be taken from the same borings. The following is a summary of the parameters and the total number expected for collection and analysis:

Moisture Content	84
Grain Size	84
Atterberg Limits	84
Standard Proctor	28
Unconfined Compressive Str.	8
Recompacted Permeability	14
Vertical Permeability	28
Total Uranium	42
TCLP Uranium	14

The geotechnical sampling and analysis will be conducted according to the appropriate ASTM standards to assure quality results (Table 1).

The Analytical Support Level (ASL) for all geotechnical analysis will be ASL B, and the ASL for the total uranium and the TCLP uranium is D. Level D requires data validation of sample analysis in accordance with the "FEMP Data Validation Procedure, "SSOP-1004, REV. 0. In general, results that are rejected by the validation process will be disqualified from application for the intended use. Validity of chemical data (i.e., 95-percent confidence limit) with respect to its intended use will be assessed based on laboratory-supplied QA/QC data and protocols outlined in EPA's "Laboratory Data Validation Functional Guidelines for

Evaluation Inorganic Analysis 7/88." This functional guideline will be used as set forth by EPA Region V. The data validation process for the radiological analyses will also be done in accordance with the approved FEMP internal guidelines.

For the chemical analysis Field Quality Assurance samples will be collected; e.g., duplicate samples and equipment rinsate samples. Laboratory Quality Control samples; e.g., method blanks, and matrix spikes/duplicates, will also be collected.

Records documenting geotechnical laboratory equipment calibration will be maintained and included in project records.

SUMMARY

The analytical support levels (ASL) for this effort will be B and D. For the chemical analysis Field Quality Assurance samples will be collected; e.g., trip blanks, duplicate samples, equipment rinsate samples, and performance evaluation samples. Laboratory Quality Control samples; e.g., method blanks, and matrix duplicate/replicates, will also be collected.

The primary objective of this sampling effort is to facilitate the selection of an on-site disposal facility location and subsequent geotechnical design study.

Table 1
SUMMARY OF GEOTECHNICAL ANALYSIS AND METHODOLOGIES

Analyte	Method
Moisture Content	ASTM D2216-90
Grain Size	ASTM D422-63
Atterberg Limits	ASTM D4318-84
Unconfined Compressive Strength	ASTM 2166
Standard Proctor	ASTM D698
Recompacted Permeability	ASTM D5084
Vertical Permeability	ASTM D5084
Total Uranium	App. K of FEMP SCQ
TCLP Uranium	App. K of FEMP SCQ

Table 2
ANALYTICAL SUPPORT LEVELS REQUIRED FOR ANALYSIS

Analysis	ASL LEVEL
Moisture Content	B
Grain Size	B
Atterberg Limits	B
Standard Proctor	B
Unconfined Compressive Strength	B
Remolded Permeability	B
Vertical Permeability	B
Total Uranium	D
TCLP Uranium	D

DQO SUMMARY FORM

Revision: 0
Effective Date: 10/28/94

1.A. Task/Description: CRU #: 2_____
Pre-Design Field Investigation Geotechnical Borings

1.B. Project Phase: (Put an X in the appropriate selection.)

RI ☐ FS ☐ RD ☐ RA ☐ R,A ☐ OTHER ☒ Specify: Pre-Design

1.C. DQO No.: GT-004 DQO Reference No.: GT-003,006

---

2. Media Characterization: (Put an X in the appropriate selection.)

Air ☐ Biological ☐ Groundwater ☐ Sediment ☐ Soil ☒

Waste ☐ Wastewater ☐ Surface water ☐ Other (specify) _____

---

3. Data Use with Analytical Support Level (A-E): (Put an X in the appropriate Analytical Support Level selection(s) beside each applicable Data Use.)

Site Characterization
A ☐ B ☐ C ☐ D ☐ E ☐

Risk Assessment
A ☐ B ☐ C ☐ D ☐ E ☐

Evaluation of Alternatives
A ☐ B ☐ C ☐ D ☐ E ☐

Engineering Design
A ☐ B ☒ C ☐ D ☒ E ☐

Monitoring during remediation activities
A ☐ B ☐ C ☐ D ☐ E ☐

Other (Explain) _____
A ☐ B ☐ C ☐ D ☐ E ☐

4.A. Drivers: OU2 Feasibility Study preferred alternative, and State of Ohio landfill siting regulations. If the pre-design siting study identifies a suitable location, then additional confirmatory samples will be collected during the detailed design phases of the project. These design phases are called preliminary (30%) and (60%) design by USEPA and Title I/II design by DOE.

4.B. Objective: To gather geotechnical data and specific radiological soil data. The data will facilitate selection of a location for an on-site disposal facility.

---

5. Site Information (Description): The site is located at the east side of the FEMP, in a radiologically uncontrolled area. The site is relatively flat and covered with grass. Radiological, decontamination and site access problems are not anticipated.

DQO SUMMARY FORM

Revision: 0
Effective Date: 10/28/94

DQO Number: GT-004

6.A. Data Types with appropriate Analytical Support Level Equipment Selection and SCQ Reference: (Place an "X" to the right of the appropriate box or boxes selecting the type of analysis or analyses required. Then select the type of equipment to perform the analysis if appropriate. Please include a reference to the SCQ Section.)

1. pH	☐	2. Uranium	X	3. BTX	☐
Temperature	☐	Full Radiologic	☐	TPH	☐
Specific Conductance	☐	Metals	☐	Oil/Grease	☐
Dissolved Oxygen	☐	Cyanide	☐		
		Silica	☐		
4. Cations	☐	5. VOA	☐	6. Other (specify)	
Anions	☐	ABN	☐	Geotech. - see Table 1	
TOC	☐	Pesticides	☐		
TCLP	X	PCB	☐		
CEC	☐				
COD	☐				

6.B. Equipment Selection and SCQ Reference:

Equipment Selection		Refer to SCQ Section
ASL A		SCQ Section:
ASL B	Geotechnical Analysis	SCQ Section: 5.3.3
ASL C		SCQ Section:
ASL D	Mass Spectrometry	SCQ Section: APP. E,G
ASL E		SCQ Section:

7.A. Sampling Methods: (Put an X in the appropriate selection.)

Biased	X	Composite	☐	Environmental	☐	Grab	☐	Grid	☐
Intrusive	X	Non-Intrusive	☐	Phased	☐	Source	☐		

Other (specify): _____

DQO SUMMARY FORM

DQO Number: GT-004

7.B. Sample Work Plan Reference: (List the samples required. Reference the work plan or sampling plan guiding the sampling activity, as appropriate.)

Background samples: Samples have been previously collected from this area

7.C. Sample Collection Reference: (Please provide a specific reference to the SCQ Section and subsection guiding sampling collection procedures.)

Sample Collection Reference: see Table 1

---

8. Quality Control Samples: (Place an "X" in the appropriate selection box.)

8.A. Field Quality Control Samples:

Trip Blanks	☐	Container Blanks	☐
Field Blanks	☒	Duplicate Samples	☒
Equipment Rinsate Samples	☒	Split Samples	☐
Preservative Blanks	☐	Performance Evaluation Samples	☐

Other (specify) _____

8.B. Laboratory Quality Control Samples:

Method Blank	☒	Matrix Duplicate/Replicate	☒
Matrix Spike	☒	Surrogate Spikes	☐

Other (specify) _____

9. Other: Please provide any other germane information that may impact the data quality or gathering of this particular objective, task or data use.

Fernald Environmental Management Project

Data Quality Objectives

Title: Cone Penetrometer Tests for Disposal Cell Design

Number: GT-003

Revision: 1

Effective Date: 10/24/94

Contact Name: John Berretz

UNCONTROLLED COPY

Approval: _____ *Date:* 10/24/94
DQO Coordinator

Rev #	0	1			
Date	10/10/94	10/24/94			

Data Quality Objectives for
Cone Penetrometer Tests for Disposal Cell Design

1) STATEMENT OF THE PROBLEM

The preferred alternative for the Operable Unit 2 Feasibility Study is to consolidate waste materials on-site in an engineered waste disposal facility. Based upon previous investigations, and logistical considerations, the eastern part of the FEMP (Eastern Site) has been selected for additional study. The preliminary studies will be used in the design of the actual waste disposal facility. The problem to be addressed by the proposed sampling is the uncertainty concerning the location of potentialy inter-connected sands within the gray glacial till material on the Eastern Site, and uncertainty concerning the shear strength of the soil.

State of Ohio requirements to site a landfill require that the most suitable geology be defined. This means low permeability environments with slow groundwater flow systems. Sand lenses are a critical component to define in order to complete initial characterization. The shear strength of the soil relates to the compaction/failure of the soil due to the load of the waste facility.

Two studies have been conducted in the area for the purposes of siting a waste disposal facility. Both were focused on smaller areas, and there are large areas without lithological data. Regional scale groundwater studies have also contributed data on lithology and groundwater, but these are also in widely separated areas. A preliminary review of these data indicated that there are significant missing soil data due to no recovery or due to shelby tube sampling that was not recorded in the boring log.

Additional data are required to reduce the uncertainty to a level that is acceptable for decision making. The present sample grid is not small enough to detect sand bodies that will be a problem from an engineering standpoint. Penetrometer locations will be placed to reduce the uncertainty of the lithology between existing sample locations. The uncertainty has been detailed and refined by kriging and three dimensional modeling.

2) THE DECISION

The data resulting from the penetrometer study will be used as decision tools in the following ways:

- The location of lithological contacts between till and sand will be used in a 3-D solid block model to visualize the distribution of sand;
- The location of the data point will be used in a geostatistical kriging program to assess the uncertainty in the resulting data field;
- The interpreted geological column from the penetrometer effort will be compared to soil boring lithological descriptions from nearby control points, and
- The interpreted strength data will be compared to soil sample data and will be used to design a confirmatory geotechnical sampling program.

In summary, direct use of the data will be for decisions on additional soil boring

locations, geotechnical sampling locations and additional penetrometer locations.

A concern involves cost/scheduling for additional studies. The availability of workers and equipment already owned by DOE to complete initial studies is a cost effective method to save money. The ability to collect some additional data prior to meeting with the regulatory agencies will enhance the existing site model for the area. This will favorably impact the schedule by encouraging regulatory support for FERMCO's subsequent predesign field investigation of the Eastern Site. Work not completed by the DOE funded penetrometer will be completed by subcontract penetrometer.

There is a concern that soil borings drilled through the potentially beneficial clay confining units would compromise their integrity. No penetrometer pushes will penetrate through the clay into the Great Miami Aquifer. To ensure this, estimated thicknesses of the till have been determined by kriging existing information, the cone penetrometer pushes will terminated five feet short of the thickness of the till. The proposed technology produces the minimum intrusion necessary to collect lithological data. For example, instead of an 8" diameter borehole, the proposed Dutch Cone penetrometry will produce a hole that is 1.5" in diameter. Abandonment of these holes will include using non-shrinking K-type grout for pluging.

3) INPUTS THAT EFFECT THE DECISION

The penetrometer measures in-situ stress on a steel probe that is pushed into the ground, as described in ASTM method D3441-86 "Standard Test Method for Deep, Quasi-static, Cone and Friction-Cone Penetration Tests of Soil". When used with a transducer, the probe records hydrostatic pressure. The measured quantities are friction and cohesion which are used to calculate shear strength of the soil. The soil types can be defined based upon these data. The method of data measurement and recovery are provided in the ASTM standard D3441-86. The directly measured data include cone resistance, sleeve friction resistance and pressure transducer readings if a piezocone is used. The methods to summarize and calculate these data are provided in the method. The data are manipulated by standard industry computer software to provide estimated shear strength and interpretations of the grain size in the gravel, sand, silt and clay breakdown.

Although there is currently no reference to the method in the SCQ, the proposed measurements are standard for cone penetrometry according to established ASTM method.

FERMCO costs for the proposed DOE research vehicle to conduct the penetrometer testing will be for support personnel. The Eastern Site is not a radiologically controlled area and will require minimum effort for Health and Safety, Radiological Control Technicians and FERMCO supervision. Since the activity is estimated to take about two weeks, the estimated cost to FERMCO is four labor-weeks or $11,500. There will be no lab analyses. Money for the activity will be available through funding approved for the Pre-Design Investigation. The budget for subcontract penetrometer activities is $85,000.

The OU5 RI states that uranium surface contamination may be present since the investigation area is within a 20mg/kg total uranium envelope. The precautionary

measure that will be used is to conduct periodic radiological field screening of the surface and equipment.

4) THE BOUNDARIES OF THE DECISION

Sampling will occur in an area on the east boundary of the FEMP that measures approximately 2000 feet wide by 5300 feet long, with the long edge parallel with the east boundary of the site. Penetrometer measurements will be obtained from the brown clay (up to 15 feet below the surface) and the grey clay (up to 50 feet below the surface) to a maximum of 5 feet above the estimated bottom of the till. The mechanism to push and retract the penetrometer probe is enclosed and truck mounted. This means that collecting penetrometer data is not sensitive to weather extremes. Approximately 43 cone penetrometer samples are proposed.

5) LOGIC STATEMENT

All the measured data will be required to define the strength and lithology. Selected sample points will all be used to reduce uncertainty concerning the location of sand deposits.

The data will be used to define the local geology and would be of use to those groups needing this information. There is no other known user for the data.

If the penetrometer data are more sensitive in detecting sand lenses in the till than soil sampling, then additional sites in areas of historically poor sample recovery may be planned.

If the penetrometer data define areas of sand then additional penetrometer or soil borings may be planned to collect engineering solution data.

If the penetrometer testing fails to correlate with soil boring data on lithology and strength values, then the technique may not be used during confirmatory geotechnical testing.

6) CONSTRAINTS ON THE UNCERTAINTY OF THE DECISION

A "false positive" means that sand materials are identified based upon the measured data and in reality there is no sand at that location. Although shear strength would be incorrectly estimated to be too high, the removal of the sand would be planned if it was extensive. If the sand materials were attempted to be excavated, there would be a cost impact due to additional unwarranted excavation.

A "false negative" means that no sand materials are detected, when in reality there are sand materials present. In this case, the shear strength would be estimated to be too low. Such errors could result in an overdesign for the structural part of the facility and an underdesign of the hydraulic control for the facility. However, the geotechnical design will be based upon data collected from soil borings, and from tests conducted in certified

labs on soil samples from these borings. A safety factor will be applied to account for the observed variability in the laboratory data. If the sand is unexpectedly encountered during construction it may add cost due to delays for excavation and recompaction.

There are no anticipated health risk or ecological impacts from a false reading by the penetrometer. The anticipated impacts are the same for false positive or false negative and are ranked as political/social and cost.

False negative errors are of the greatest concern, due to the potential for higher permeability in sand zones, and the proposed technique is highly effective in supressing false negatives.

The stated precision for the method is 5% to 20% in the strength determination, and this is within the variability in the soil medium. The proposed use for the penetrometer data in design will adjust for uncertainty either in the measurement or in the strength distribution by applying a "safety factor". Quantitative measures to define the measurement uncertainty include the following:

- CPT probes will be calibrated according manufacturers methods prior to field work.
- Locations will first be tested by CPT that are adjacent to existing soil borings. Locations of previous borings will be used as periodic checks on the general accuracy of the probe.
- A duplicate CPT push will be used to define the precision of the method under field conditions.
- If probe refusal is encountered a new push will be conducted adjacent to the refusal location.

7) OBTAINING QUALITY DATA

The penetrometer methodology is established by a standard method and will be compared against existing soil boring logs at several locations. Sample locations have been selected nearly equidistant from existing data points. These locations are expected to provide the most useful data with respect to unknown geological conditions. Thus the measurement expected to provide sufficient information is being made within areas of high data coverage (for calibration purposes) and in areas of low data coverage (to resolve uncertainty). The most probable distribution for the shear strength is log-normal for the gray clay.

The selected sample points for CPT are not expected to be representative of the entire eastern site soil mass since the medium is heterogeneous. The goal of the sampling is to reduce the uncertainty in the areas of no structural or lithological data. Since the soil is highly heterogeneous, the data coverage is intended to identify the largest sand units that will have a significant impact on the engineering design. Smaller sand bodies will be managed during construction using a method like excavation and replacement with compacted clay.

The least cost must be considered in the context of the siting program. The objective is to lower the required safety factor by providing sufficient data. Collecting the field data is less than two orders of magnitude of the design and construction cost.

In general, a phased approach is the most cost effective program. A phased approach is defined as one in which lower resolution data are collected first as a guide to the more expensive and accurate soil boring sampling. The cost of the penetrometer is based upon feet of sampling, estimated at 250 feet per day. The first phase of work, using the DOE penetrometer, is proposed to sample at 50 locations at an average depth of 25 feet deep each. Additional phases will use subcontract services to complete data gathering needs in areas identified during the first phase.

There is currently no defined validation methodology for geotechnical design data. However, protocol is being developed for the SCQ and CRU2. The equivalent data is proposed to be ASL B.

Precision of the CPT will be assessed through duplicate pushes at two locations as near as possible to each other. Precision of geotechnical lab tests may not be possible to determine since some tests are on unique samples and are destructive, and since the mixing of test batches may introduce variability into the analyses. Bias and sensitivity are not believed to be relevant to geotechnical tests. Completeness does relate once the basis for lab data acceptance has been determined.

Decontamination procedures for the work performed will follow the procedures in the SCQ, Section 6.8.

DQO SUMMARY FORM

Revision: 1
Effective Date: 10/24/94

1.A. Task/Description: CRU #: CRU2

To collect Dutch Cone Penetrometer data from about 43 sample locations at the east side of the FEMP. Data are to be used to define geology, and to generate information on soil strength. No laboratory samples will be collected as part of this activity.

1.B. Project Phase: (Put an X in the appropriate selection.)

RI ☐ FS ☐ RD ☐ RA ☒ R_vA ☐ OTHER ☐ Specify:

1.C. DQO No.: GT-003 DQO Reference No.: N/A

---

2. Media Characterization: (Put an X in the appropriate selection.)

Air ☐ Biological ☐ Groundwater ☐ Sediment ☐ Soil ☒

Waste ☐ Wastewater ☐ Surface water ☐ Other (specify) _____

---

3. Data Use with Analytical Support Level (A-E): (Put an X in the appropriate Analytical Support Level selection(s) beside each applicable Data Use.)

Site Characterization
A ☐ B ☐ C ☐ D ☐ E ☐

Risk Assessment
A ☐ B ☐ C ☐ D ☐ E ☐

Evaluation of Alternatives
A ☐ B ☐ C ☐ D ☐ E ☐

Engineering Design
A ☐ B ☒ C ☐ D ☐ E ☐

Monitoring during remediation activities
A ☐ B ☐ C ☐ D ☐ E ☐

Other (Explain) _____
A ☐ B ☐ C ☐ D ☐ E ☐

4.A. Drivers: CRU2 Feasibility Study preferred alternative, and State of Ohio landfill regulations concerning locating a waste facility. If the pre-design study to site the facility identifies a suitable location, then additional confirmatory samples will be collected during the detailed design phases of the project. These phases are called preliminary (30%) and intermediate (60%) design by USEPA and Title I/II design by USDOE.

4.B.Objective: To gather penetrometer data and lithological data. There will be no lab samples. The data will be used to locate sand lenses that are significant from an engineering standpoint, and to characterize the bearing strength of the soil.

5. Site Information (Description):

The sample locations are located at the east side of the FEMP, in a radiologically uncontrolled area. The site is relatively flat and covered with grass. Radiological, decontamination and site access problems are not anticipated.

DQO SUMMARY FORM

Revision: 1
Effective Date: 10/24/94

DQO Number: GT-003

6.A. Data Types with appropriate Analytical Support Level Equipment Selection and SCQ Reference: (Place an "X" to the right of the appropriate box or boxes selecting the type of analysis or analyses required. Then select the type of equipment to perform the analysis if appropriate. Please include a reference to the SCQ Section.)

1. pH	☐	2. Uranium	☐	3. BTX	☐
Temperature	☐	Full Radiologic	☐	TPH	☐
Specific Conductance	☐	Metals	☐	Oil/Grease	☐
Dissolved Oxygen	☐	Cyanide	☐		
		Silica	☐		
4. Cations	☐	5. VOA	☐	6. Other (specify)	
Anions	☐	ABN	☐	Penetrometer, not in SCQ	
TOC	☐	Pesticides	☐		
TCLP	☐	PCB	☐		
CEC	☐				
COD	☐				

6.B. Equipment Selection and SCQ Reference:

Equipment Selection		Refer to SCQ Section
ASL A		SCQ Section:
ASL B	CONE PENETROMETER	SCQ Section: N/A
ASL C		SCQ Section:
ASL D		SCQ Section:
ASL E		SCQ Section:

7.A. Sampling Methods: (Put an X in the appropriate selection.)

Biased	☒	Composite	☐	Environmental	☐	Grab	☐	Grid	☐
Intrusive	☐	Non-Intrusive	☒	Phased	☐	Source	☐		

DQO SUMMARY FORM

DQO Number: GT-003

7.B. Sample Work Plan Reference: (List the samples required. Reference the work plan or sampling plan guiding the sampling activity, as appropriate.)

The DQO is being established prior to completion of the work plan. The number of samples (43) is proposed as a possible first phase. Later penetrometer samples may be collected based upon the results of the proposed first phase. A full justification is attached in a DQO write up.

Background samples: At least five penetrometer pushes will be adjacent to borings to establish a baseline

7.C. Sample Collection Reference: (Please provide a specific reference to the SCQ Section and subsection guiding sampling collection procedures.)

Sample Collection Reference: ASTM D 3441-86

---

8. Quality Assurance/Control Samples: (Place an "X" to the right of the appropriate selection(s).)

8.A. Field Quality Assurance Samples:

Trip Blanks	☐	Container Blanks	☐
Field Blanks	☐	Duplicate Samples	☒
Equipment Rinsate Samples	☐	Split Samples	☐
Preservative Blanks	☐	Performance Evaluation Samples	☐

Other (specify) Correlation tests will be conducted between the penetrometer and existing boring data. Duplicate pushes will be used to determine precision. Manufacturers standardization will be used to check the operation of the instrument.

8.B. Laboratory Quality Control Samples:

Method Blank	☐	Matrix Duplicate/Replicate	☐
Matrix Spike	☐	Surrogate Spikes	☐

Other (specify) _____

9. Other: Please provide any other germane information that may impact the data quality or gathering of this particular objective, task or data use.

DQO

LYSIMETER, WELLS, AND K_d SAMPLING

Data Quality Objectives for Disposal Facility Pre-Design Investigation

1. State the Problem or the Situation to be Resolved

The preferred alternative for the Operable Unit 2 Feasibility Study is to consolidate waste materials in an on-site, engineered waste disposal facility. Based on information collected during previous investigations, the eastern part of the Fernald Environmental Management Project (FEMP), the Eastern Site, has been selected for additional hydrogeological characterization required by Ohio Administrative Code (OAC) 3745-27 and by the substantive requirements of a Permit-to-Install (PTI).

The area was chosen for this investigation based on OAC 3745-27 setback requirements which include locations of residences adjacent to the site, domestic water supply well, public water supply capture zones, wetlands, surface water bodies, historical resources, and property boundaries.

Previous investigations have been completed within the Eastern Site; however, these investigations were not adequate to fulfill the OAC requirements for the entire area. Lysimeters and monitoring wells have been installed and sampled in the study area; however, no clustered monitoring points exist to determine vertical hydrogeologic properties of the till. Information from these investigations was used to aid in selecting sampling locations and to interpret the hydrogeology of the siting area. Three existing lysimeters will be sampled during this investigation.

The preliminary groundwater model indicates that the cleanup goal or working preliminary remediation goal (WPRG) for uranium in soil is below the background concentration. Data is required to refine existing model inputs based on a combination of empirical values, analytical methods, and published values.

2. Identify the Decisions to be Made that Affect the Situation

This field investigation including sampling of 14 geotechnical borings, installation of 15 monitoring wells, and installation of 9 lysimeters will be conducted to provide radiological, hydrogeological, and age dating information. This information will be used to aid in demonstrating the protectiveness of the Glacial Overburden to the underlying aquifer and to aid in fulfilling the regulatory requirements for an on-site waste disposal facility. Objectives of the geotechnical investigation are outlined in DQO GT-004.

The major decision to be resolved by this investigation is whether the geology and hydrogeology of the area identified for the on-site disposal facility is adequately protective of

the underlying aquifer with respect to above-ground waste storage. Naturally-occurring inorganic analytes (calcium, carbonates, phosphates, magnesium, sulfate, nitrate, alkalinity, and bromide) and tritium within the groundwater will be used to estimate the vertical seepage velocity and the time of travel within the till.

Total and isotopic uranium data is required to further define the vertical and lateral extent of uranium over the study area to determine the ability of the gray clay to retard the migration of uranium.

The coefficient of distribution (K_d) for uranium used in the preliminary groundwater model are based on a combination of empirical methods, analytical methods, and published K_d values. The low WPRG indicate that the K_d values are not representative of the clay soils within the upper portion of the overburden at the site. This investigation will provide K_d values for both the gray and the brown till in the area underlying the proposed disposal facility.

3. Identify Inputs that Affect the Decision

The heterogeneity of the area was considered when selecting the number and locations of borings, lysimeters, and monitoring wells. The number and locations of sampling locations will be based on providing lateral data coverage of the proposed siting area, minimizing data uncertainties and minimizing the number of sample points to avoid compromising the integrity of the confining till unit.

Sampling locations will be reassessed after receipt of data from Cone Penetrometer Testing investigation to be completed prior to implementation of the activities outlined in this DQO. Lithologic descriptions of the borings will be used to confirm CPT interpretations and refine the three dimensional model of the study area. Objectives of the CPT investigation are outlined in DQO GT-003. Borings will be terminated a minimum 5 feet above the base of the Glacial Overburden. The number of borings, lysimeter installations, and well installations was chosen to best represent the overall footprint of the project (approximately 70 acres).

The monitoring wells will be installed in 5 clusters containing 3 monitoring wells at each location. Soil samples collected from the monitoring well screened interval at each of the 15 locations will be analyzed for total and isotopic uranium. Uranium concentrations will be used to further define the lateral and vertical uranium distribution of the study area. The monitoring wells will be sampled after development for bromide, alkalinity, calcium, magnesium, nitrate, sulfate, carbonates, phosphates, total and isotopic uranium, and tritium. These results will be used to estimate

the time of travel of groundwater through the till. Analytical requirements are outlined in Table 1.

The lysimeters will be installed at 3 locations containing 3 lysimeters each. Soil samples will be collected at the lysimeter screened interval and analyzed for total and isotopic uranium; the samples will undergo Toxicity Characteristic Leaching Procedure (TCLP) and the extract will be analyzed for total and isotopic uranium. Total and TCLP results will be used, along with data collected during installation of the monitoring wells, to define the uranium distribution of the study area.

A sample of the silica will be collected prior to installation of the lysimeters and analyzed for total and isotopic uranium to determine if naturally-occurring uranium is present. During placement of the silica flour around the lysimeter, a bromide tracer will be added to aid in determining complete development and evacuation of the lysimeter. The lysimeters will be sampled for a minimum of three rounds for calcium, magnesium, and bromide. Once these parameters have stabilized, the newly-installed lysimeters and the three existing lysimeters will be analyzed for bromide, alkalinity, calcium, magnesium, bromide, nitrate, sulfate, carbonate, total phosphates, tritium, and total and isotopic uranium. Analytical results of these parameters will be used to evaluate the apparent age of the water, thereby estimating the time of travel through the till.

Soil samples will be collected from 14 geotechnical borings. One soil sample each from the brown till and the gray till will be analyzed for total and isotopic uranium. One soil sample collected from the gray till in each boring will undergo the TCLP and the leachate will be analyzed for total and isotopic uranium. The uranium results will be used to verify existing horizontal and vertical profile of the uranium concentrations in the soil and verify existing solubility values. This information will be used for site selection of the disposal facility.

One soil sample collected from the gray till in each of the 14 geotechnical borings will be tested for K_d following the attached procedure. Additionally, two groundwater samples will be collected from one uranium-contaminated monitoring well and one uncontaminated monitoring well and tested for Kd following the attached procedure. Leachate generated during the batch procedure will be analyzed for total and isotopic uranium. These data will be used to aid in determining the contaminant transport mechanism within the till.

4. Define the Boundaries of the Situation

Sampling will occur in an area on the east boundary of the FEMP that measures approximately 2000 feet wide by 5300 feet long, with the long edge parallel with the east boundary of the site. Samples will be collected from the brown clay (up to 15 feet Below the surface) and the grey clay (up to 50 feet below the surface) using thin-walled Shelby tubes and split-spoon samplers.

The population affected by this investigation consists of all operable units specifying on-site disposal as a disposal alternative: Operable Unit 2, Operable Unit 3, Operable Unit 4, and Operable Unit 5. No temporal boundaries are anticipated.

5. Develop a Logic Statement

Information obtained from this investigation will be used to evaluate the area with respect to requirements specified in OAC 3745-27. If the sampling indicates that the area is suitable for the on-site disposal facility, then further investigations of the area will be completed. A suitable area for the on-site disposal facility would be an area that exhibits low concentrations of uranium, soils with low uranium solubility properties, few sand layers, and long time of travel. If the results indicate that the area is not suitable, then the need for further investigation of the area will be reevaluated.

The data will be used to provide an on-site disposal facility for waste generated during remedial activities for all operable units at the FEMP.

6. Establish Constraints on the Uncertainty of the Decision

A false negative error is the finding that the area is unsuitable for the onsite disposal facility, i.e., is not protective of the environment, when the area is suitable. A false positive error is the finding that the area is suitable for the disposal facility when, in actuality, it is not protective of the environment.

A false negative error could result in excessive engineering design for the on-site disposal facility. A false positive error could result in a design for the facility which may not effectively protect the environment. In either case, errors would result in an cost increase due to the need to either reevaluate remedial alternatives or the need for costly over-design of the facility.

No regulatory action levels are applicable to this investigation; therefore, standard calculations cannot be used to quantify acceptable percent errors. Laboratory and field

quality control measures shall be instituted to minimize errors. A 90 percent data recovery is deemed acceptable for this project. If sufficient valid data points are not obtained to meet project objectives, then samples collected for archive are available for analysis providing individual parameter hold times are not expired and monitoring wells and lysimeters can be resampled. Any boring location at which soil sampling or monitoring well installation cannot be completed will be relocated within approximately 5 feet of the original location in order to complete the objectives of this investigation.

7. Optimize a Design for Obtaining Quality Data

Data quality will be optimized by stringently following the Sitewide CERCLA Quality Assurance Plan (SCQ) and referenced documents.

Samples for uranium (Total,TCLP, and isotopic), tritium, and inorganic analyses will be analyzed and reported at an Analytical Support Level (ASL) D, E, and B, respectively. Data validation will be completed on the analytical results in accordance with "FEMP Data Validation Procedure" SSOP-1004. Results rejected by the validation process will be disqualified from application for the intended use.

Sampling errors will be controlled through review of the sampling plan with sampling technicians and technical guidance will be provided by Operable Unit 2 technical staff during drilling and sampling operations.

Field Quality Control (QC) for all samples will consist of duplicates, field blanks, and equipment rinsates. One rinsate per 20 samples collected will be prepared and analyzed for total and isotopic uranium during drilling activities. One rinsate per 20 samples or per round, whichever is more frequent, will be collected during groundwater sampling and will be analyzed for inorganics, total and isotopic uranium, and tritium. A duplicate sample will be collected for every round of water sample collection or 1 in 20, whichever is more frequent; the duplicate samples will be analyzed for inorganics, total and isotopic uranium, and tritium. A field blank will also be prepared during water sample collection at each location and analyzed for inorganics, total and isotopic uranium, and tritium.

Laboratory QC samples for ASL B and D will follow prescribed levels in the Sitewide CERCLA Quality Assurance Project Plan. For ASL E, a method blank (dead water), Laboratory Control Sample (LCS), duplicate, and matrix spike will be performed at a frequency of 1 per 20 samples. Additionally, all raw data will need to be included in the deliverable.

1.A. Task/Description: **CRU #:** 2
Disposal Facility Pre-Design Investigation

1.B. Project Phase: (Put an X in the appropriate selection.)

RI ☐ FS ☐ RD ☐ RA ☐ R,A ☐ OTHER ☒ Specify: Pre-Design

1.C. DQO No.: MS-013 DQO Reference No.: GT-003,004

---

2. Media Characterization: (Put an X in the appropriate selection.)

Air ☐ Biological ☐ Groundwater ☒ Sediment ☐ Soil ☒

Waste ☐ Wastewater ☐ Surface water ☐ Other (specify)___

---

3. Data Use with Analytical Support Level (A-E): (Put an X in the appropriate Analytical Support Level selection(s) beside each applicable Data Use.)

Site Characterization
A ☐ B ☐ C ☐ D ☐ E ☐

Risk Assessment
A ☐ B ☐ C ☐ D ☐ E ☐

Evaluation of Alternatives
A ☐ B ☐ C ☐ D ☐ E ☐

Engineering Design
A ☐ B ☒ C ☐ D ☒ E ☒

Monitoring during remediation activities
A ☐ B ☐ C ☐ D ☐ E ☐

Other (Explain) _____
A ☐ B ☐ C ☐ D ☐ E ☐

4.A. Drivers: Ohio Administrative Code 3745-27, Permit to Install

4.B.Objective:
To obtain hydrogeologic and chemical data to aid in the modeling of an on-site disposal facility

---

5. Site Information (Description):
The site is located at the east side of the FEMP, in a radiologically uncontrolled area.
The site is relatively flat and covered with grass. Radiological, decontamination
and site access problems are not anticipated

DQO Number: MS-013

6.A. Data Types with appropriate Analytical Support Level Equipment Selection and SCQ Reference: (Place an "X" to the right of the appropriate box or boxes selecting the type of analysis or analyses required. Then select the type of equipment to perform the analysis if appropriate. Please include a reference to the SCQ Section.)

1. pH	☐	2. Uranium	☒	3. BTX	☐
Temperature	☐	Full Radiologic	☐	TPH	☐
Specific Conductance	☐	Metals	☐	Oil/Grease	☐
Dissolved Oxygen	☐	Cyanide	☐		
		Silica	☒		

4. Cations	☐	5. VOA	☐	6. Other(specify)
Anions	☐	ABN	☐	isotopic U
TOC	☐	Pesticides	☐	Tritium
TCLP	☐	PCB	☐	Inorganics(seetable1)
CEC	☐			
COD	☐			

6.B. Equipment Selection and SCQ Reference:

Equipment Selection		Refer to SCQ Section
ASL A		SCQ Section:
ASL B	Laboratory Instrumentation	SCQ Section: Appendix G
ASL C		SCQ Section:
ASL D	Laboratory Instrumentation	SCQ Section: Appendix G
ASL E	Laboratory Instrumentation	SCQ Section: N/A

7.A. Sampling Methods: (Put an X in the appropriate selection.)

Biased ☒ Composite ☐ Environmental ☐ Grab ☐ Grid ☐

Intrusive ☒ Non-Intrusive ☐ Phased ☐ Source ☐

Other (specify): _____

DQO Number: MS-013

7.B. Sample Work Plan Reference: (List the samples required. Reference the work plan or sampling plan guiding the sampling activity, as appropriate.)

Background samples: See Section 2.0 of Project Specific Plan (PSP)

7.C. Sample Collection Reference: (Please provide a specific reference to the SCQ Section and subsection guiding sampling collection procedures.)

Sample Collection Reference: PSP for Phases I and II of the Pre-Design Field Investigation

---

8. Quality Control Samples: (Place an "X" in the appropriate selection box.)

8.A. Field Quality Control Samples:

Trip Blanks	☐	Container Blanks	☐
Field Blanks	X	Duplicate Samples	X
Equipment Rinsate Samples	X	Split Samples	☐
Preservative Blanks	☐	Performance Evaluation Samples	☐

Other (specify) _____

8.B. Laboratory Quality Control Samples:

Method Blank	X	Matrix Duplicate/Replicate	X
Matrix Spike	X	Surrogate Spikes	☐

Other (specify) Laboratory Control Samples

QC will be performed as per the specified ASL

9. Other: Please provide any other germane information that may impact the data quality or gathering of this particular objective, task or data use.

Matrix	Parameter	ASL	Customary Volume	Minimum Volume	Preservative	No. of Samples
Monitoring Wells						
Soil	Total Uranium	D	50 grams		None	15
Soil	Isotopic Uranium	D	100 grams		None	15
Water	Alkalinity, Bromide, Calcium, Magnesium, Nitrate, Sulfate, Carbonates	B	1 liter	300 mL	Cool, 4°C	15
Water	Total Phosphates	B	150 mL	40 mL	Cool, 4°C, pH <2, H_2SO_4	15
Water	Tritium	E	1 Liter	275 mL	None	15
Lysimeters						
Soil	Total Uranium	D	50 grams		None	9
Soil	Isotopic Uranium	D	100 grams		None	9
Soil	TCLP Total Uranium	D	150 grams (1 liter leachate)		None	9
Soil	TCLP Isotopic Uranium	D	400 grams (2 liters leachate)		None	9
Silica	Total Uranium	D	50 grams		None	1
Silica	Isotopic Uranium	D	100 grams		None	1
Water	Calcium, Magnesium, Bromide	B	1 liter		Cool, 4°C	9 X 3 Rounds

Matrix	Parameter	ASL	Customary Volume	Minimum Volume	Preser vative	No. of Sampl es
Water	Alkalinity, Bromide, Calcium, Magnesium, Nitrate, Sulfate, Carbonates	B	1 liter	300 mL	Cool 4°C	9
Water	Total Phosphates	B	150 mL	40 mL	Cool, 4°C, pH <2, H_2SO_4	9
Water	Tritium	E	1 liter		None	3
Water	Total Uranium	D	1 liter		None	9
Water	Isotopic Uranium	D	2 liters		None	9
Geotechnical Borings						
Soil	Total Uranium	D	50 grams		None	28
Soil	Isotopic Uranium	D	100 grams		None	28
Soil	TCLP Total Uranium	D	150 grams		None	28
Soil	TCLP Isotopic Uranium	D	400 grams or 2 liters leachate		None	28

Procedure for Analyzing Soil Samples for Uranium K_d Determination

Test Program

The K_d study is being performed to determine how natural species of uranium in groundwater and soil partition between phases. To obtain the most representative results, natural materials will be used whenever possible. This includes natural soils from the location of concern, natural groundwater contaminated with uranium, and natural groundwater without contamination.

Fourteen standard adsorption/desorption tests will be performed and eight calibration tests will be performed on soil samples and contaminated groundwater (see table 1). The fourteen soil samples will be collected from seven of the fourteen geotechnical borings. Seven soil samples will be collected in the brown clay and seven in the grey clay. Fourteen soil samples will collected, one from each soil location, and sent off site for total and isotopic uranium analysis. Contaminated and clean groundwater will be collected from appropriate monitoring wells and a sample of each will be sent off site for total and isotopic uranium analysis.

The disposal facility will be constructed over clean till, so the partitioning of uranium will occur first from potentially contaminated leachate seeping through the bottom of the facility liner. The contaminated groundwater is intended to represent the leachate as it leaves the disposal facility. Speciation studies have shown that despite the original nature of the waste or source material, uranium speciates into two predominant forms in groundwater, carbonate and phosphate.

After the adsorption tests are complete, the soil from the adsorption tests will be placed into a new reactor with clean groundwater to assess its desorption characteristics. Fourteen standard desorption tests will be performed. This test will represent conditions where contaminated leachate moves through the till allowing the soil to adsorb a fraction of the uranium, then cleaner leachate moves through, creating an environment where uranium can desorb from the soil back into the groundwater.

A number of factors affect the K_d in natural conditions; groundwater-to-soil ratio, the sorption isotherm, pH, dissolved oxygen, temperature, permeability of the soil, and others. Many other factors can affect K_ds, but those listed are assumed to be the major factors. The pH and temperature factors can be controlled by keeping them constant near the in-situ levels.

The in-situ groundwater-to-soil ratio is no greater then the porosity of the soil, which is the ratio of the volume of soil voids to the volume of soil. This ratio is typically between 20 and 40%. The ratio of groundwater to soil in the standard K_d method used at Fernald is 8.75 (875%). The groundwater volume is large in

practice because it produces a conservative result and it makes sampling of the solute possible during the test. In order to determine the impact of the groundwater-to-soil ratio on K_d levels, two separate calibration tests will be run. These calibration tests will consist of soil samples split from two grey clay soil samples. These calibration tests will include a groundwater-to-soil ratio of 0.50 (50%), only slightly larger than in-situ conditions. These tests will be run without sampling, equilibrium will be determined by duplicate tests conducted in parallel. The test will be conducted exactly as the normal test, but samples will not be drawn. The reactor will be opened whenever samples are taken from the duplicate test. A final sample will be collected from the calibration tests when the duplicate test reaches equilibrium. The desorption test will be run for the two soil samples in the same way with a 0.5 clean groundwater-to-soil ratio. A final water and soil sample will be collected at the end of the desorption test. The results of this calibration test can then be compared to the duplicate test to see what impact the groundwater-to-soil ratio had on K_d determinations.

The sorption isotherm describes the transfer of a product from liquid to solid under different concentrations in solution. The amount of product adsorbing from solution to the solid will vary depending on the amount of product available in solution. The relationship is generally assumed to be linear, although many studies have indicated a non-linear relationship. The sorption isotherm can be determined by conducting a series of tests with different concentrations of product in solution. The results of the tests can be plotted on an initial versus final solute concentration graph. Each final solute concentration is plotted against its initial solute concentration, and all the tests are plotted on one graph. The resulting curve represents the sorption isotherm. Equations are available to determine the K_d under linear and non-linear sorption isotherms. Once the sorption isotherm is determined, more exact equations can be used to determine K_ds. In order to determine the sorption isotherm, six tests will be run with different initial solute concentrations. The initial concentration will be varied by diluting contaminated groundwater with clean groundwater to achieve the desired initial concentration. The tests will be conducted using the standard procedure and the results will be plotted to determine the sorption isotherm relationship. The six sorption isotherm tests will include four of the seven grey clay soil samples and two soil samples split from the grey soil samples. The groundwater concentration will be varied by combining uranium contaminated groundwater with clean groundwater.

The permeability of the soil can be maintained by keeping the sample as undisturbed as possible. Standard K_d practices require the soil sample to be dried, crushed, sifted, and agitated throughout the test. In an effort to determine the impact that these practices have on K_ds, two duplicate tests will be run in which the soil will not be disturbed or agitated but allowed to sit

in contact with groundwater as in natural conditions. The two duplicate samples will be split from two of the seven grey clay soil samples. The test will be performed identically to the standard method except for the agitation of the sample. The results of this duplicate test can then be compared to the agitation method to bracket the conservatism inherent in the standard procedure.

The dissolved oxygen factor is complicated to duplicate because dissolved oxygen is limited at depth in the soil. In order to reproduce the in-situ dissolved oxygen conditions, the K_d study would have to be performed in a closed reactor with as little dissolved oxygen as possible (possibly in a nitrogen gas environment). This condition is difficult to achieve because of the required sampling that takes place during the test. One solution to this is to run calibration tests along side the normal K_d tests. The calibration tests will be set up in the same manner as the normal test, but the reactor will be sealed until the completion of the test. The two calibration samples will be split from two of the seven grey clay samples. Equilibrium will be determined using the duplicate tests run in the normal manner. A sample will be collected at the end of the test when the duplicate samples achieve equilibrium. The results of the calibration test would then be compared to the normal test results to determine the affect of dissolved oxygen on the K_d study.

Sample Collection

Soil samples will be collected using a split spoon sampler. Soil samples will be collected from seven borings. Seven soil samples will be collected in the brown clay horizon, and seven samples in the grey clay horizon, two in each boring, Soil samples will be transferred to containers as quickly as possible with as little disturbance as possible. A minimum of 2000 grams (field weight) of soil will be collected from each location.

Groundwater samples will be collected from a representative contaminated groundwater well and a representative clean (background) groundwater well. A minimum of 20 gallons of groundwater will be collected from each well. The groundwater will be placed in containers with a minimum of air in the container.

Sample Preparation

For the 14 collected samples, the 400 grams (dry weight) of soil will be transferred to a 4.0 liter reactor without drying or crushing. Dry weight will be determined using a standard method on a portion of the soil sample. Pre-test agitation of the soil should be kept to a minimum. A 3500 ml sample of groundwater contaminated with a known amount of uranium will be added to the reactor at a pH consistent with perched groundwater pH levels (6.8 to 8.0). The pH level will be adjusted with nitric acid or calcium hydroxide.

Two in-situ groundwater-to-soil ratio tests will be performed in

parallel with two duplicate normal tests. In these two reactors only 200 ml of groundwater will be added. Four diluted groundwater tests will be conducted in parallel with four normal duplicate tests. The diluted groundwater will consist of 3500 ml total solution, with 0.75, 0.5, 0.25, and 0 fractions of contaminated groundwater to clean groundwater.

When the first test is completed with contaminated groundwater the reactor will be drained and the solids will be centrifuged. The solids will then be transferred to a clean reactor and 3500 ml of background groundwater will be added. The pH will be adjusted as in the first test. The two in-situ groundwater-to-soil ratio tests will only have 200 ml of clean groundwater added to them.

Sample Mixing

The samples will be placed in a rotating tumbler and mixed continuously until completion of the testing. The tumbler shall be operated at 29 +/- 2 rpm. Two reactors will be left untumbled throughout the test with a minimal soil disturbance.

Collection of Samples During Testing

Samples of leachate will be collected after stopping the tumbler for a sufficient time period (minimum of 10 minutes) to allow the solids to settle. A volume of the leachate will be decanted from the reactor and filtered through a 0.45 micron filter paper. The volume of decant removed will be based upon the requirements for analytical testing (approx. 20 ml). After the removal of the decant, 20 ml of pH adjusted water will be added back to the reactor. Any solids transferred during the separation step will be returned to the reactor.

Intermediate samples will be collected at approximately 72, 144, 168, 240, 288, 360, and 384 hours following initiation of the reaction and analyzed at the FEMP laboratory for total uranium. The reaction may be stopped earlier if the data indicate that equilibrium conditions between the soil and liquid have been achieved. Equilibrium will be determined by maintaining a plot of concentration versus time for each reaction.

Two reactors will remain untested during the program. The reactors will remain sealed. Equilibrium conditions will be determined by duplicate tests run in the standard method. Final samples will be collected from the two sealed reactors when the duplicate tests indicate equilibrium.

After the results indicate an equilibrium condition, a final solution sample will be collected and split for analysis by both the FEMP laboratory and an off-site laboratory. The final sample will be analyzed for total and isotopic uranium. Twenty two solution samples will be collected at the end of the adsorption testing (see Table 2). If a sample does not reach equilibrium after 384 hours, a decision of whether to terminate the testing will be made.

Identical batch testing procedures will be followed for the second test. At completion of the second batch test, a water and soil sample will be collected from the tumbler and split for analysis by both the FEMP laboratory and an off-site laboratory. These final samples will be analyzed for total and isotopic uranium. Twenty two solution samples and 22 soil samples will be collected at the end of the desorption testing (see Table 2).

Table 1

K_d Tests to Be Performed
7 brown clay adsorption/desorption tests - Standard methods, 100% contaminated water during adsorption test.
4 grey clay adsorption/desorption tests - Standard methods, 100% contaminated water during adsorption test.
3 grey clay adsorption/desorption tests - Standard methods, one 75% contaminated water, one 50% contaminated water, and one 25% contaminated water during adsorption test.
2 grey clay (split sample) adsorption tests - standard methods except that only 200 ml of 100% contaminated groundwater will be used and no sampling during study. Tests should be performed in parallel with standard grey adsorption tests that correspond with the split sample locations to determine equilibrium conditions.
2 grey clay (split sample) adsorption tests - standard methods, clean groundwater used.
2 grey clay (split sample) adsorption tests - standard methods except that no agitation of the sample will be performed. Disruption of the soil will be kept to a minimum.
2 grey clay (split sample) adsorption tests - standard methods except that only the reactors will be sealed and remain unopened until the end of the test. 100% contaminated groundwater will be used. No sampling will be conducted during study. Tests should be performed in parallel with standard grey adsorption tests that correspond with the split sample locations to determine equilibrium conditions.

Table 2

Off Site K_d Sampling Program		
Initial Sampling	Post Adsorption Sampling	Post Desorption Sampling
14 soil samples, 7 brown and 7 grey, analyzed for total and isotopic uranium	7 water samples from the brown clay reactors for total and isotopic uranium	7 water and soil samples from the brown clay reactors for total and isotopic uranium
2 groundwater samples, one contaminated and one clean, sampled for total and isotopic uranium	7 water samples from the grey clay reactors for total and isotopic uranium	7 water and soil samples from the grey clay reactors for total and isotopic uranium
	2 water samples from the in-situ groundwater-to-soil ratio reactors (split grey clay samples) for total and isotopic uranium	
	2 water samples from the clean groundwater baseline reactors (split grey clay samples) for total and isotopic uranium	
	2 water samples from the no agitation reactors (split grey clay samples) for total and isotopic uranium	
	2 water samples from the closed reactors (split grey clay samples) for total and isotopic uranium	
14 total soil, 2 total water	22 total water	14 total soil, 14 total water

EQUATIONS FOR K_l STUDY

Equations:

C_o = Initial Concentration of Uranium in Solid Phase
C_{w1} = Concentration of Uranium in Leachate (from adsorption)
C_{w2} = Concentration of Uranium in Leachate (from desorption)
W = Mass of soil
V = Volume of groundwater used During Test
m_s = Initial Mass of Uranium in soil

$$m_s = C_o * W$$

m_L = Mass of Uranium in Liquid (at equilibrium)

$$m_L = C_{w1} * V$$

C_s = Solid Phase Concentration of Uranium (from adsorption phase)

$$C_s = (m_s - m_L)/W$$

K_{l1} = Leachate Coefficient of the Total Mass

$$K_{l1} = C_s/C_{w1}$$

K_{l2} = Leachate Coefficient of the Extractable Portion

$$K_{l2} = \frac{C_{w2} * V}{(C_{w1} - C_{w2})\ W}$$

K_e' = Extractable Percentage Remaining after adsorption

$$K_e' = \frac{C_{w2} * V}{C_s\ (1-C_{w2}/C_{w1})\ W}$$

C_s' = Concentration of Remaining Extractable Mass after adsorption

$$C_s' = C_s * K_e'$$

K_e = Total Initial Extractable Portion

$$K_e = \frac{C_{w1}V + C_s'W}{m_s}$$

ATTACHMENT II

UNEXPECTED DISCOVERY OF CULTURAL RESOURCES

Fernald Environmental FERMCO Restoration Management Corporation	Title: UNEXPECTED DISCOVERY OF CULTURAL RESOURCES	
	DOCUMENT NO: SSOP-1070 REVISION NO: 0	
	Effective Date: 03-31-94	Page 3 of 8

1.0 PURPOSE

This procedure provides the method by which Fernald Environmental Restoration Management Corporation (FERMCO) or sub-contractor personnel shall notify the FERMCO Cultural Resource Coordinator (CRC) within the Environmental Planning Department of the Regulatory Programs Division of the unexpected discovery of Cultural Resources during drilling or any other ground disturbing activities at the Fernald Environmental Management Project (FEMP) or beyond its boundaries.

2.0 SCOPE

This procedure applies to all FEMP and subcontractor personnel. This procedure addresses all ground disturbing activities in process at the FEMP and is applicable to all FEMP, subcontractor and teaming partner personnel.

3.0 DEFINITIONS

Cultural Resource Coordinator (CRC) - The FERMCO person in charge of managing cultural resources at the FEMP.

Cultural Resources - Any prehistoric district, building, structure, or object included in or eligible for inclusion on the National Register of Historic Places. Such items include artifacts, records, and remains that are related to a district, site, building, structure, or object.

Ground Disturbing Activity - Any activity that disturbs the ground either on the FEMP site or on adjacent property. Examples of ground disturbance include stripping of topsoil, drilling wells, road improvements, etc.

Field Personnel - FERMCO of Subcontractor employees that are conducting ground disturbing activities.

Historic Properties - Any historic or prehistoric site, structure, or object.

Responsible Field Representative - The employee designated with responsibility for field activities such as Construction Engineer, Construction Coordinator or Project Engineer.

State Historic Preservation Office (SHPO) - The state authority responsible for enforcement of the National Historical Preservation Act.

4.0 RESPONSIBILITIES

DOE-FN Cultural Resources Point of Contact

- Notifies SHPO of unexpected cultural resource discovery.
- Negotiates mitigation.
- Notifies FERMCO of authorization to proceed with work.

Environmental Planning Manager

- Notifies DOE-FN of unexpected cultural resource discovery.
- Coordinates mitigation.
- Prehistoric/Historic Assessment Report.

Cultural Resource Coordinator (CRC)

- Coordinates Cultural Resource Management Program.
- Notifies Environment Planning Manager of unexpected cultural resource discovery.
- Completes and signs Pre-historic/Historic Assessment Report.
- Assists in completion and signs unexpected cultural resource discovery form.
- Coordinates mitigation.

Project Engineer/Construction Engineer/Construction Coordinator

- Stops work upon discovery of a cultural resource.
- Notifies CRC upon discovery of a cultural resource.
- Completes and signs Unexpected Cultural Resource Discovery form.

5.0 GENERAL

The National Historic Preservation Act (36 CFR 800, Section 106) requires Federal agencies to take into account the effects of their actions on properties that are on, or eligible for inclusion on, the National Register of Historic Places List. This list includes undiscovered resources as well as districts, sites, buildings, structures or objects.

5.0 **GENERAL** (cont.)

To comply with section 106 and due to the large number of historic and archaeological resources existing in the area, consultation was requested by the Department of Energy (DOE) from the State Historic Preservation Office (SHPO) concerning proposed remedial activity at the FEMP. This consultation resulted in an agreement that any planned surface disturbance activities in non-controlled areas at the FEMP must be preceded by a cultural resources survey to determine the existence of potentially significant historic or archeological resources.

Any records resulting from this procedure shall be archived with the CRC program and made available on a "need to know" basis as specified in public law (PL) 96-95.

All discoveries, historic and prehistoric, shall be included in the Cultural Resource Management Plan (Draft).

6.0 **PREREQUISITES**

None

7.0 **PROCEDURE**

7.1 HANDLING THE DISCOVERY OF A CULTURAL RESOURCE

FIELD PERSONNEL

1. Upon discovery of any historic, pre-historic, or archaeological site, feature, or object, cease all ground disturbing activity and contact the responsible Field Representative.

RESPONSIBLE FIELD REPRESENTATIVE

2. Immediately report the discovery to the Cultural Resource Coordinator and the responsible CRU Director or Division Manager.

3. Complete the Unexpected Cultural Resources Discovery form (Figure 1) and log it into the Field Activity Daily Log. Submit the Discovery form and a copy of the Field Activity Daily Log to the CRC.

   NOTE: Proper Document Control Procedures must be followed.

Fernald Environmental FERMCO Restoration Management Corporation	Title: UNEXPECTED DISCOVERY OF CULTURAL RESOURCES
	DOCUMENT NO: SSOP-1070 REVISION NO: 0
	Effective Date: 03-31-94 / Page 6 of 8

REGULATORY PROGRAMS/ENVIRONMENTAL PLANNING **UNEXPECTED CULTURAL RESOURCES DISCOVERY FORM**	Date/Time of Discovery: Construction Engineer:
PROJECT TITLE: PROJECT LOCATION:	Contact with Construction Contract Manager and Time:
Location of Discovery Include sketch map:	
Description of Discovery Include any damage to discovery, additional discovery observed, etc. Use additional sheets, if necessary:	
Method of Discovery:	
Additional Comments:	

Environmental Planning Department Manager:	Date:
CRU Director/Division Manager:	Date:
Responsible Field Representative:	Date:
Cultural Resource Coordinator Signature:	Date:

FS-F-3780 (Rev. 03/08/94)

000129

Figure 1 - Unexpected Cultural Resources Discovery Form

7.1 HANDLING THE DISCOVERY OF A CULTURAL RESOURCE (cont.)

CULTURAL RESOURCE COORDINATOR

4. Verbally report the discovery to the Environmental Planning Department Manager.

5. Complete and sign a Prehistoric/Historic Assessment Report using the format provided (Attachment A).

6. Determine whether an on-call Cultural Resources Subcontractor will be used.

7. Report the assessment to the Environmental Planning Department Manager.

ENVIRONMENTAL PLANNING DEPARTMENT MANAGER

8. Sign the Prehistoric/Historic Assessment Report.

9. Verbally contact the DOE Cultural Resource Point of Contact and follow up with the signed Prehistoric/Historic Assessment Report. Include a copy of the completed Unexpected Discovery of Cultural Resources form.

DOE CULTURAL RESOURCE POINT OF CONTACT

10. Contact the State Historic Preservation Office and gain concurrence for the mitigation procedure to be followed, if any.

CULTURAL RESOURCE COORDINATOR

11. Secure the cultural resource area until notified by DOE.

12. Coordinate any further mitigation efforts through an on-call Subcontractor or through EPD.

CONSTRUCTION

13. After receipt of written notification from the DOE, direct field personnel to proceed with ground activities in the affected area.

8.0 APPLICABLE DOCUMENTS

8.1 DRIVERS

- Archeological and Historic Act of 1974
- National Historic Preservation Act of 1966, as amended
- Native American Graves and Repatriation Act of 1990

8.2 REFERENCES

- 36 CFR 800, Section 106: "Protection of Historic Properties"
- "Secretary of the Interior Standards and Guidelines for Archaeology and Historic Preservation"

ATTACHMENT III

TIMCO
LYSIMETER MANUAL

TIMCO™ Lysimeters for Vadose Zone Monitoring

TIMCO™ Cup Type Lysimeter with Porous Ceramic Filter

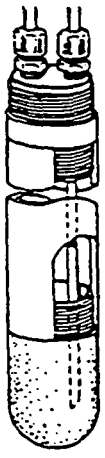

Also Available in Tube Type Body in Teflon® or PVC

TIMCO™ Porous Ceramic Lysimeters

TIMCO'S™ Porous Ceramic Lysimeters are constructed similar to the TIMCO™ Porous Teflon® Lysimeters. Advanced machining techniques allow the ceramic filter to be threaded. This permits, for the first time, a totally adhesive and sealant free construction. Sealants, potential sources of contamination, are eliminated. The TIMCO™ Ceramic Filter Elements have a pore size of 0.446 micrometers by the mercury penetration porosimetry method (ASTM C-699).

The TIMCO™ Porous Ceramic Filter element may be easily removed from the body for decontamination or replacement if accidental breakage occurs. TIMCO™ uses Viton® O-rings in the flush threaded ceramic joints, to ensure a leak-free seal. The top plug is threaded to allow attachment of casing. If the lysimeter unit is located more than 20' (6M) below the ground surface, a TIMCO™ Deep Sampling Lysimeter will be required. Sample recovery in excess of 10 psi may damage the filter and/or silica pack and force the collected pore water sample out of the lysimeter, back into the soil. TIMCO™ recommends the use of its Select Silica Flour as a pack around the installed lysimeter.

Porous Ceramic Lysimeters: Sizes Available with PVC Body	
Tube type	1.90" (48.3mm) x 17.5" (44.5cm)
Cup type	1.90" (48.3mm) x 17.5" (44.5cm)

Lysimeter Accessories

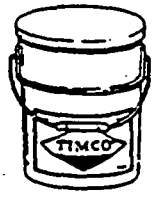

Silica Flour

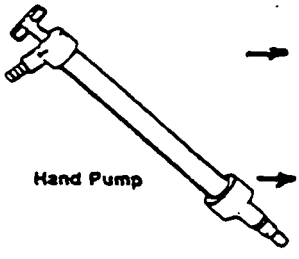

Hand Pump

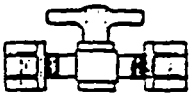

Teflon® Stopcock

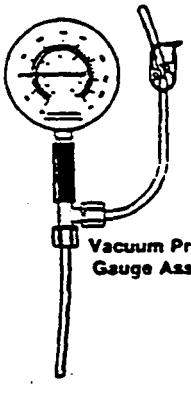

Vacuum Pressure Gauge Assembly

Delrin® Stopcock

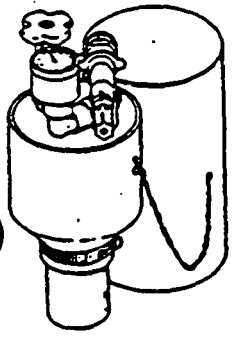

Lysimeter Head Assembly

TIMCO™ Lysimeter Accessory Items

Tubing

TIMCO™ provides tubing to connect the lysimeter to the surface. Usually 1/4" OD Teflon® or polyethylene is suitable.

TIMCO™ Select Silica Flour

Silica, 200 mesh (99.8% pure) is available in 50lb (23kg) plastic pails. Allow a minimum of 1 pail per installed lysimeter. Mix each pail with 2 gallons of distilled water to make about 6 gallons of silica slurry.

Vacuum Pressure Hand Pump

The pump is used to apply vacuum to the lysimeter during the pore water extraction phase. Pressure or vacuum is applied to deliver the sample to the surface.

Vacuum Pressure Gauge Assembly

When installed on the lysimeter vacuum/pressure tube, allows for constant monitoring during the pore water extraction phase. During the sample recovery phase, it will alert the user to potential over-pressurization.

Teflon® Stopcock and Delrin® Shut-Off Valves

Designed to allow easy sealing of the sample delivery and vacuum/pressure lines when not using a lysimeter well head assembly. The Teflon® stopcock is used with Teflon® tubing, the Delrin® shut off valve is used with polyethylene tubing.

Lysimeter Head Assembly

Designed for placement on the casing at the ground surface, it provides a neat and secure termination of the tubes from the lysimeter. A permanent vacuum/pressure gauge and taps for the vacuum/pressure and sample line are mounted beneath the weatherproof cap. Stopcocks and gauge assembly are not needed with Head Assembly.

Timco Lysimeter Models

The Shallow Tube-Type and Cup-Type Lysimeters

TIMCO™ Cup Type Lysimeter

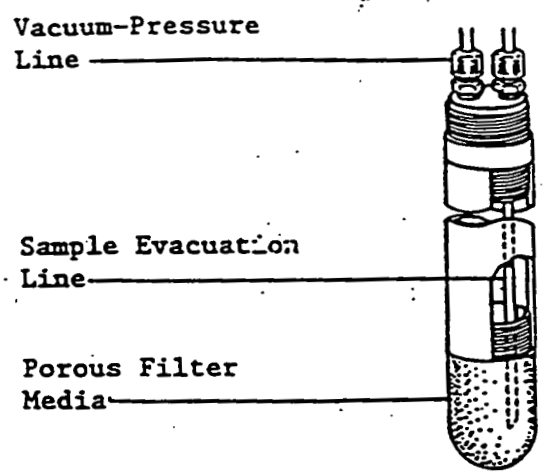

Body in Teflon® or PVC

TIMCO™ Tube Type Lysimeter

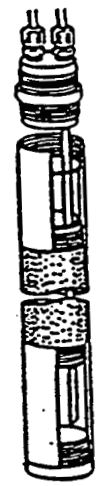

Body in Teflon® or PVC

These models are designed for placement at depths of 20 feet or less. Note that either model is supplied with a threaded top plug to allow attachment to a riser casing. The Cup-Type is available in 1.9" O.D. only. The Teflon(R) Tube-Type can be supplied in either 2.375" O.D. or 1.9" O.D.. The Ceramic Tube-Type is supplied in 1.9" O.D. only.

The Deep-Sampling Tube-Type and Cup-Type Lysimeters

Body in Teflon® or PVC

These models are designed for placement at depths of 20' to 300'. The Teflon(R) Tube-Type is available in 2.375" O.D. and 1.9" O.D., and the Ceramic Tube-Type is available in 1.9" O.D. only. The Ceramic and Teflon Cup-Type Lysimeters are available in 1.9" O.D. only.

000134

System Requirements

The following items will be required for a typical Timco(TM) Lysimeter Installation up to 20 feet beneath the ground surface.

- A Timco Shallow Cup-Type or Tube-Type Lysimeter
- A Timco Lysimeter Head Assembly
- A 50 lb. Pail of Timco Silica Flour (200 mesh, 99.88% pure)
- Up to 40 feet of Teflon(R) or Polyethylene Tubing, and tube groover
- A Timco Vacuum/Pressure Hand Pump
- Up to 20 feet of Timco Deka-Seal(TM) Teflon(R) or PVC flush threaded riser casing
- Timco Surface Protective Cover

Additional items not provided by Timco:

- Chemicals and distilled water for decontamination (optional)
- Distilled water for pressure testing, de-airing, and prefilling
- Plastic gloves for handling the decontaminated system
- A latex membrane for vacuum testing the system
- Clean plastic bags to wrap the assembled system for transfer to the installation site
- 2 gallons of distilled water for each 50 lb. pail of Timco Silica Flour
- A large clean silica flour mixing container
- A large rigid spatula to mix the silica slurry
- A clean sample collection container with a 2 port stopper seal compatible with the Timco Teflon(R) tubing. The capacity should be greater than that of the lysimeter.
- Bentonite to seal the borehole above the lysimeter
- A padlock for the protective cover

Operating Principles

The Timco(TM) Lysimeter System is designed for long term use in one location. Care must be taken with the installation to ensure correct operation for a long period. The assembled system should always be checked for leaks prior to being put in the ground.

A Tube or Cup Type Lysimeter has an outside diameter of 1.9" or 2.375". These should be placed in boreholes of at least 6" in diameter to allow for an adequate silica slurry pack to surround the lysimeter.

The lysimeter has the vacuum/pressure outlet marked on the lysimeter top plug. This connection leads to the vacuum gauge on the head assembly. It allows a vacuum to be applied to the system, thereby creating a vacuum gradient between the inside of the lysimeter, the silica slurry pack, and the soil under investigation. The second unmarked connection is the sample evacuation tube. This is connected to the head assembly sample line.

The specification of the silica flour used to surround the installed lysimeter is critical and should only be purchased from Timco. If a 6" borehole is used, a single 50 lb. pail will be sufficient for each lysimeter installation. The flour is made into a slurry with distilled water before placement. The silica slurry is used to establish a continuum between the lysimeter and the surrounding soil. Since the Timco(TM) silica is not water soluble, it immediately begins to separate itself from the distilled water. When placed in the ground the water migrates into the soil and establishes the continuity required for surface tension to be transmitted in an outward direction upon application of a vacuum. This allows any moisture attached to the soil particles to be drawn into the lysimeter through the silica pack.

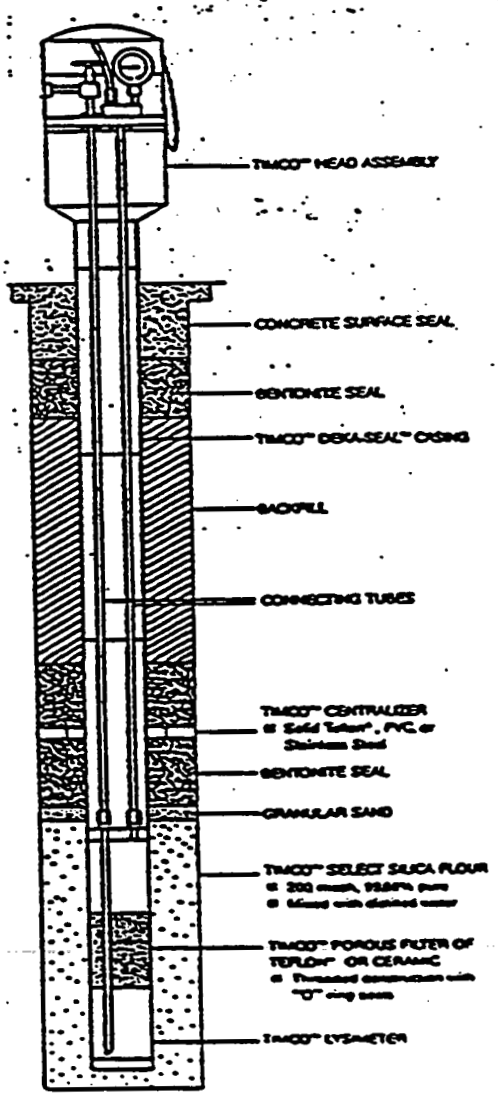

000136

Assembling the Lysimeter

If properly installed, the typical lysimeter system will be expected to produce representative samples for several decades. It is therefore important to check out the system thoroughly before taking it to the installation site. Prior to installation the system should be pressure and/or vacuum tested to ensure it is leak free.

The lysimeter system components supplied by Timco are cleaned and packed in plastic bags. They have not been subjected to the rigorous decontamination procedures required for equipment used to obtain samples for subsequent micro-analysis of trace pollutants. If complete decontamination is required, see the section titled "Decontamination Procedures" and/or follow those specified for the specific job. Note that if the lysimeter body is decontaminated it will be necessary to pass at least 2 liters of distilled water through the porous section to ensure complete removal of the liquids used for the decontamination. After this procedure is completed the components should be bagged. Subsequent handling should be done in a clean area using sterile gloves.

The system components supplied are manufactured by Timco to satisfy the requirements of the order. Mixing these with components from other sources may lead to incompatibility problems resulting in leakage or failure of the lysimeter system.

1). Assembly of Tubing to Fittings.

Tubing, because of its slippery nature and rigidity, has to be specially grooved before a fitting is attached. Failure to do so will allow the tubing to slip out of the fitting and cause leakage. Timco normally grooves each end of the tubing supplied with the order. If the installation requires the tubing to be shortened the new end will need to be grooved using a special grooving tool available from Timco. The tool not only cuts the groove but also places the groove at the correct distance from the end of the tube.

2). Assembling the System.

As mentioned earlier, it is suggested that the complete system be assembled away from the installation site. This will allow for the assembly and testing under clean conditions. The assembled lysimeter may then be easily placed at the job site.

The assembly should begin with the attachment of the vacuum/pressure and sample evacuation lines to the lysimeter top plug. If necessary cut each to length, making certain cuts are clean and vertical to the horizontal length of the tubing. Follow the previous instructions for the grooving. Note that the Vacuum /Pressure outlet at the top of the lysimeter plug is marked with a "V". Make certain that the other end of the tube connected to this fitting is suitably marked or tagged. This will provide assurance that the tubing is correctly connected to the Timco Head Assembly.

If the installation is to involve threaded riser casing of appropriate length, assemble it at this time. Pass the two tubes from the lysimeter through the casing string. To complete the assembly attach the sample evacuation and vacuum/pressure lines to the bottom of the head assembly. The Timco Vacuum/Pressure Hand Pump is connected in the vacuum mode. The black female hose connector should be used to attach the end of the tubing to the hand pump (black end). The assembled system may now be tested for leaks.

Testing the System

Effective use of the lysimeter system requires that there be no air leaks. Two methods are described to check the assembled system for leaks.*

Pressure Testing

Completely immerse the lysimeter and the head assembly components, except for the gauge, in water. Connect the pressure outlet of the Timco Hand Pump to the vacuum/pressure line fitting on the head assembly. Apply 15 psi. of air pressure. Observe all connections for evidence of bubble leakage. The porous filter section should give off bubbles over its entire surface area. If leaks are observed in the tubing fittings, disassemble and check for correct assembly and retighten. Leaks at the fitting connections to the lysimeter body or the head assembly may be wrapped with Teflon(R) tape prior to reassembly. Leaks involving the body components of the lysimeter should be checked for cleanliness, particularly the surface that touches the O-Rings.

Vacuum Testing

The porous filter media of the lysimeter body is sealed off with a latex or flexible plastic membrane. Secure a seal by placing rubber bands over the membrane and securing it to the body of the lysimeter above the porous filter. Shut off the sample valve. Connect the vacuum inlet of the pump to the vacuum/pressure port on the head assembly, and apply a vacuum in excess of 20 inches of mercury. Shut off the vacuum valve. Note the vacuum reading on the gauge. Leave the system for several hours and then recheck the vacuum reading. A small drop of up to 3 inches of mercury may be expected. If a large drop is noted, check and retighten all connections as described above.

Prewetting the Porous Filter Media

Finally, before taking the assembled lysimeter system to the installation site, Timco(TM) recommends that the lysimeter body be placed in distilled water and a vacuum of about 15 inches of mercury be applied for 1 hour. This procedure prewets all surfaces of the porous filter media, eliminating any entrapped air in the filter media. The lysimeter should be installed with the body filled with distilled water if no riser casing is used. An empty, unsupported lysimeter will float on the wet silica slurry when placed in the borehole.

* NOTE — All Timco Lysimeters are tested at Timco prior to shipping. Fittings may loosen during transit.

Installation and Evacuation of the Shallow Lysimeter

The installation of a Timco Lysimeter System should be in accordance with the following procedure. It is suitable for depths of up to 20 feet. For greater depths a Timco(TM) Deep-Sampling Lysimeter should be used.

1). Borehole Preparation

The borehole must provide adequate space to allow the lysimeter body to be surrounded by the silica slurry pack. For a 2" diameter lysimeter use a 6" or larger borehole. The borehole must allow for at least a 1.5" thickness of silica slurry all around the porous filter of the lysimeter. If difficulties are anticipated in maintaining an open borehole, use casing to hold back the material. Immediately after installation of the silica pack and lysimeter pull back the casing and install a bentonite plug.

2). Mixing the Silica Flour Slurry

The Timco(TM) 200 mesh, 99.88% pure crystalline silica flour is mixed with distilled water using a ratio of 150 mls. water to 450 grams of silica flour. The Timco Silica Flour is supplied in a 50 lb. sealed pail. This will require about 2 gallons of distilled water to make the slurry and will be sufficient for a single lysimeter installation in a 6" borehole. Add the flour slowly to the distilled water with constant stirring. The mix must be completely blended and lumpfree. Constant stirring is essential as the silica is not water soluble and will settle if not agitated.

3). Placing the Silica Slurry Pack

Pour part of the silica slurry into the borehole to provide a bed for the lysimeter. A minimum of 4" depth for the cup-type lysimeter and 2" for the tube-type lysimeter. Depending upon the borehole diameter, between a quarter and a third of the total mix is usually sufficient

The Timco(TM) Lysimeter System should now be lowered into the borehole. Take particular care to make certain that the lysimeter body is centrally located within the borehole diameter. A minimum of 1.5" of silica slurry around the annular area of the unit is essential. Timco suggests Deka-Seal(R) casing be used for support and accurate placement. Centralizers will also assure correct placement.

The balance of the silica slurry should now be poured into the borehole to completely cover and surround the lysimeter body. Note that you must have the lysimeter in intimate contact with the silica slurry and the slurry must fill all voids in the bottom of the borehole. The Lysimeter should be supported at the surface with stakes for at least 2 hours until the silica sets.

A bentonite seal should be installed next, followed by tamped backfill. A second bentonite seal is suggested near the surface. Protection at the surface can be achieved with the Timco(TM) Lysimeter Head Assembly and a Timco(TM) Security Cover set in concrete.

4). Activating the Lysimeter

If the lysimeter was filled with distilled water before installation, this should now be removed and discarded. Timco recommends the use of a two port rubber stopper in a collection flask. The flask should be of adequate size to hold the sample from a full lysimeter. This method is unlikely to disturb the silica pack and break the seal between the pack and the porous section of the lysimeter which would result in a lysimeter system failure.

1. Open the vacuum-pressure valve and the sample valve on the head assembly.
2. Attach the tube from the sample port on the head assembly to the hole in

rubber stopper. (Tube to protrude about 1" into the flask).

3. Attach the second tube from the flask to the vacuum-pressure inlet on the Timco Hand Pump. (Tube to be flush with the bottom of the rubber stopper).
4. Apply a gentle vacuum to the system, the distilled water will flow into the collection flask.

After removing the distilled water from the lysimeter, you are ready to activate the lysimeter to obtain a sample. If you start the activating procedure immediately after installation, it will be necessary to remove and discard the distilled water used to make up the silica pack. (Remove a water volume equivalent to approximately one third of that used to make up the slurry).* If the installation is left for a few days, the water in the silica pack will migrate into the surrounding soil and establish the continuity needed between the porous filter media and the soil. Samples collected in this situation should be considered representative. Use the following steps to activate the system.

1. Close the sample evacuation valve.
2. Connect the vacuum inlet of the Hand Pump to the vacuum-pressure port on the Head Assembly.
3. Apply a vacuum of 18-21 inches of mercury and close the vacuum-pressure valve.
4. When the gauge reads 10 inches of mercury or less, evacuation of water should be attempted. (Up to 24 hours may be needed).

* EXAMPLE: Using 2 gallons (7570 mls.) to mix the silica slurry would mean that the first .6 gallons (2271 mls.) of distilled water should be discarded.

5). Evacuating the Lysimeter with Pressure

The lysimeter body is pressurized and the sample is driven to the ground surface. A pressure of .44 psi is required for each foot of depth. For a 20' installation 9 psi will be needed to lift the sample. The time taken to accumulate a sample will depend upon the soil conditions. Sampling intervals separated by 48 hours or more are not uncommon. Use the following steps to evacuate the lysimeter.

1. Open the sample evacuation valve and the vacuum-pressure valve.
2. Connect the pressure outlet of the Timco(TM) Hand Pump to the vacuum-pressure port on the lysimeter head assembly.
3. Pressure should be increased gently until 9 psi is achieved. (If 9 psi were applied instantly, it is possible the silica pack would be damaged resulting in a lysimeter system failure).
4. Sample is forced up through the evacuation line and into a sample collection flask.

6). Evacuating the Lysimeter with Vacuum

This method is unlikely to disturb the silica pack and also reduces the possibility of sample aeration. Timco does not recommend this method for installations greater than 20 feet in depth. A two port rubber stopper in a collection flask is required. Use the following steps to evacuate the lysimeter.

1. Open the vacuum-pressure valve and the sample valve on the Head Assembly.
2. Attach the tube from the sample port on the Head Assembly to the hole in the rubber stopper. (Tube to protrude about 1" into the flask).
3. Attach the second tube from the flask to the vacuum-pressure port on the Timco(TM) Hand Pump. (Tube to be flush with the bottom of the rubber stopper).
4. Apply a gentle vacuum to the system, the sample will flow into the collection flask. (Flask to be of adequate size to hold the sample from a full lysimeter).

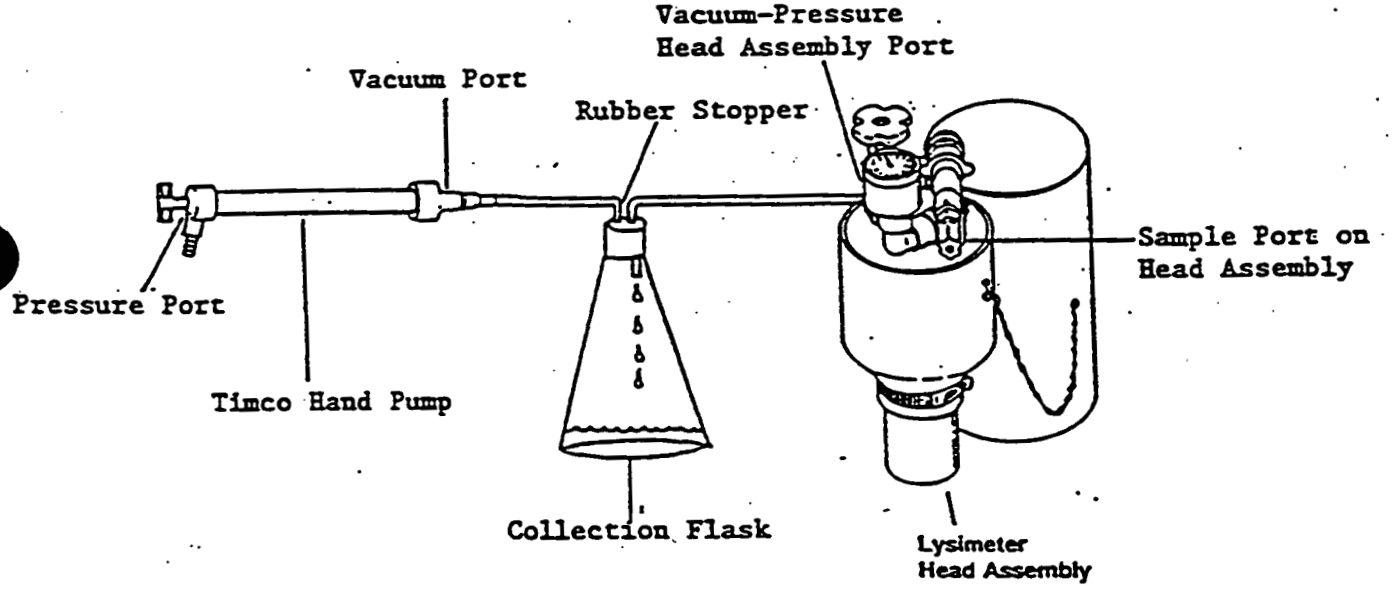

000141

Cleaning and Decontamination

The following advice is provided by Timco. Timco can assume no liability and provides no guarantee that the procedures will ensure that a Timco product has been 100% cleaned. Timco does however believe that the procedures will give the proper purity characteristic required under state of the art conditions.

Teflon(R) & Ceramic Components

Step 1 - Disassemble all components.

Step 2 - Prepare a normal solution of Hydrochloric Acid. (120 g. concentrated HCL diluted in 1 liter distilled water).

Step 3 - Rinse all components in distilled water.

Step 4 - Submerge all components in this solution for 30 minutes minimum. Use a tool to remove from the solution. Soak in distilled water.

Step 5 - Resubmerge the components in clean water at least 2 more times to remove all traces of Hydrochloric Acid.

Step 6 - Timco believes an additional step of an Isopropyl Alcohol (IPA) bath and then another bath of Hydrogen Peroxide should render the equipment clean.

Step 7 - In all cases a final rinse in distilled, deionized water should ensure that the device is then suitable for representative sampling.

PVC Components

Step 1 - All products must be thoroughly cleaned of loose PVC particles, machining burrs and any other loose materials both inside and out. (Timco normally does this with all products shipped, but occasionally mistakes do happen).

Step 2 - Prepare a suitable Isopropyl Alcohol (IPA) bath which will allow total immersion of the product to be decontaminated.

Step 3 - Allow products to remain fully immersed for a period of no less than 10 minutes.

Step 4 - Remove products with clean surgical gloves to reduce chances of new contamination. Allow excess IPA to drain off.

ATTACHMENT IV

EXAMPLE FIELD FORMS

FERNALD
RI/FS

FIELD ACTIVITY DAILY LOG

6145

DAILY LOG	DATE		
	NO.		
	SHEET	OF	

OJECT NAME	PROJECT NO.

FIELD ACTIVITY SUBJECT:

DESCRIPTION ON DAILY ACTIVITIES AND EVENTS:

VISITORS ON SITE:	CHANGES FROM PLANS AND SPECIFICATIONS, AND OTHER SPECIAL ORDERS AND IMPORTANT DECISIONS.
WEATHER CONDITIONS:	IMPORTANT TELEPHONE CALLS:

PERSONNEL ON SITE:

SUPERVISOR: DATE:

327-7-4

FERNALD RI/FS
INSTALLATION DIAGRAM
MONITORING WELL NO. _____

INSTALLATION DATE: _____

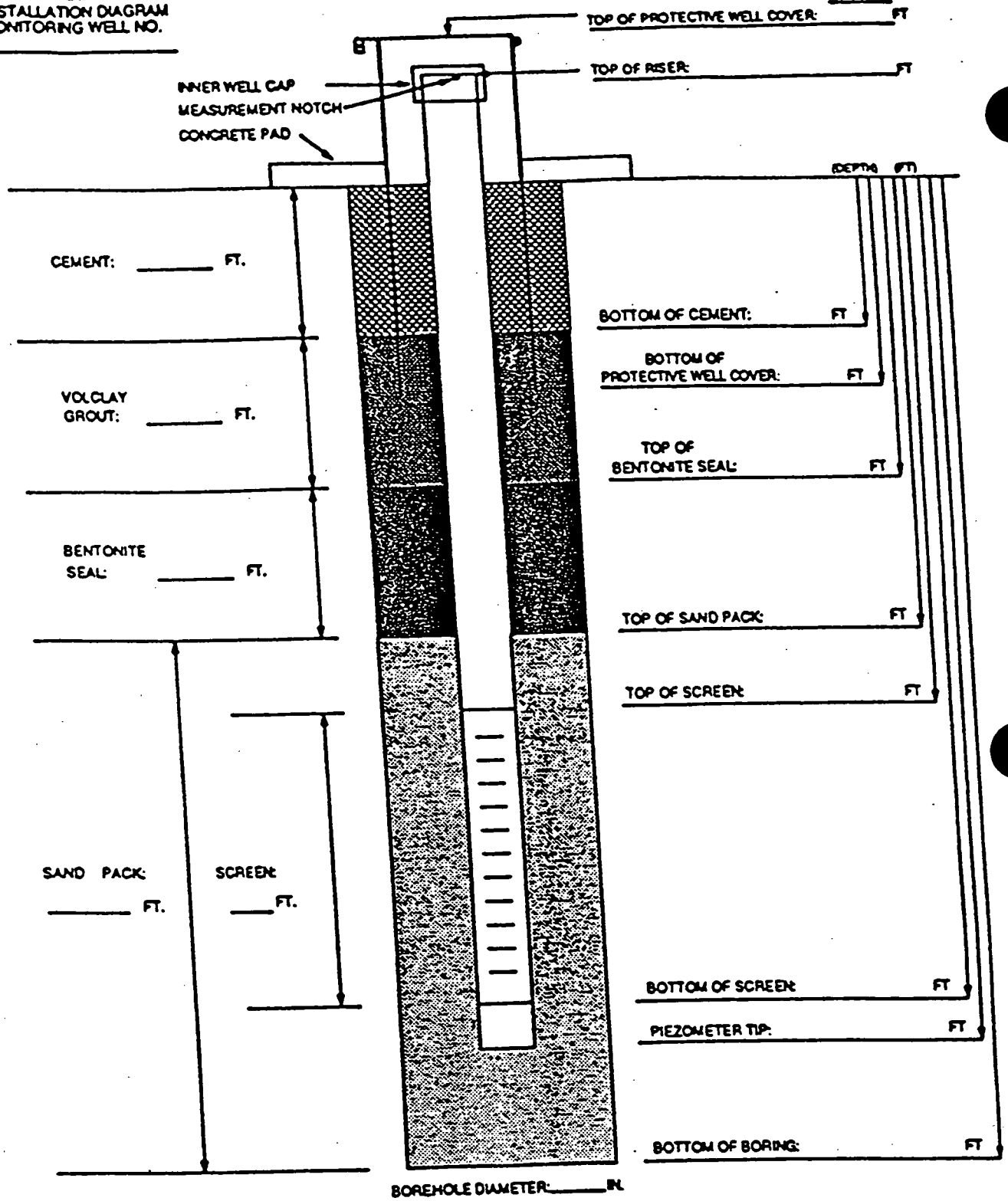

MATERIALS USED

SAND TYPE AND QUANTITY: _____
BENTONITE PELLETS (5-GALLON BUCKETS): _____
BAGS OF VOLCLAY GROUT: _____
AMOUNT OF CEMENT: _____
VOUNT OF WATER USED: _____
ER: _____
K: _____

NOTES:

1) RISER PIPE IS ____ IN. ID. 316 STAINLESS STEEL PIPE, FLUSH-THREADED JOINTS.
2) SCREEN IS ____ IN. ID. 316 STAINLESS STEEL PIPE WITH 0.____ IN. SLOTS.
3) LOWER END OF SCREEN IS CAPPED WITH AN END CAP OR THREADED SUMP.
4) WATER DEPTH AND DATE ____FT/__
5) TOP OF CASING IS SECURED WITH A STAINLESS STEEL CAP.
6) PARENTHESIS INDICATE DEPTH BEL GROUND LEVEL.
7) WELL CASING HAS A PRO E COVER WITH PADLOCK.

GEOLOGIST/ENGINEER: _____

ASI FORM 0157 REV. (0)

000145

PIEZOMETER INSTALLATION SHEET

PROJECT NAME _____ FIELD ENG./GEO. _____ DATE _____
PROJECT NO. _____ CHECKED BY _____ DATE _____
BORING NO. _____
PIEZOMETER NO. _____ DATE OF INSTALLATION _____

BOREHOLE DRILLING

DRILLING METHOD _____	TYPE OF BIT _____
DRILLING FLUID (S) USED:	CASING SIZE (S) USED:
FLUID _____ FROM _____ TO _____	SIZE _____ FROM _____ TO _____
FLUID _____ FROM _____ TO _____	SIZE _____ FROM _____ TO _____

PIEZOMETER DESCRIPTION

TYPE _____	RISER PIPE MATERIAL _____
DIAMETER OF PERFORATED SECTION _____	RISER PIPE DIAMETERS:
PERFORATION TYPE:	O.D. _____ I.D. _____
SLOTS ☐ HOLES ☐ SCREEN ☐	LENGTH OF PIPE SECTIONS _____
AVERAGE SIZE OF PERFORATIONS _____	JOINING METHOD _____
TOTAL PERFORATED AREA _____	_____

PROTECTION SYSTEM

RISER PROTECTIVE PIPE LENGTH _____	OTHER PROTECTION _____
PROTECTIVE PIPE O.D. _____	_____

ITEM	DISTANCE ABOVE/BELOW GROUND SURFACE ( )		ELEVATION ( )	
TOP OF RISER PIPE				
GROUND SURFACE	0.0			
BOTTOM OF PROTECTIVE PIPE				
BOREHOLE FILL MATERIALS:				
GROUT/SLURRY	TOP	BOTTOM	TOP	BOTTOM
BENTONITE	TOP	BOTTOM	TOP	BOTTOM
SAND	TOP	BOTTOM	TOP	BOTTOM
GRAVEL	TOP	BOTTOM	TOP	BOTTOM
PERFORATED SECTION	TOP	BOTTOM	TOP	BOTTOM
PIEZOMETER TIP				
BOTTOM OF BOREHOLE				
GWL AFTER INSTALLATION				

WAS THE PIEZOMETER FLUSHED AFTER INSTALLATION? YES ☐ NO ☐
WAS A SENSITIVITY TEST PERFORMED ON THE PIEZOMETER? YES ☐ NO ☐
REMARKS _____

VISUAL CLASSIFICATION OF SOILS

PROJECT NUMBER.	PROJECT NAME:	
BORING NUMBER.	COORDINATES.	DATE:
ELEVATION:	GWL: Depth Date/Time	DATE STARTED:
ENGINEER/GEOLOGIST	Depth Date/Time	DATE COMPLETED:
DRILLING METHODS		PAGE OF

DEPTH ( )	SAMPLE TYPE & NO	BLOWS ON SAMPLER PER ( )	RECOVERY ( )	DESCRIPTION	USCS SYMBOL	MEASURED CONSISTENCY (TSF)	REMARKS

NOTES

FERNALD RI/FS
PROJECT NO. 602
TASK 3.2

MONITORING WELL DEVELOPMENT

PAGE CF

WELL NUMBER _____

DATE(S) OF WELL INSTALLATION _____

WELL DEVELOPMENT START DATE/TIME _____ COMPLETION DATE/TIME _____

		BEFORE DEVELOPMENT	AFTER DEVELOPMENT
STATIC WATER LEVEL			
DEPTH OF OPEN HOLE			
CHANGES IN PHYSICAL CHARACTER OF WATER REMOVED	TURBIDITY		
	COLOR		
	PARTICULATES		
	ODOR		

TOTAL CALCULATED VOLUME OF WATER TO BE REMOVED (IN GALLONS) _____

TOTAL VOLUME OF WATER ACTUALLY REMOVED DURING DEVELOPMENT (GALLONS) _____

TYPE AND SIZE OF PUMP _____ TYPE AND SIZE OF BAILER _____

PHYSICAL CHARACTER OF REMOVED SEDIMENTS (LITHOLOGY AND GRAIN SIZE)

DESCRIPTION OF SURGE TECHNIQUES (IF USED)

METER CALIBRATION

pH TEMP	pH STD.	pH STD.	SPECIFIC CONDUCT.	µMHOS/CM	µMHOS/CM	TURBIDITY NTU	TURBIDITY NTU

METER MODEL/ SERIAL NO.	pH METER	SPECIFIC CONDUCTANCE METER	TURBIDITY METER	DISSOLVED OXYGEN METER

FIELD ENGINEER/GEOLOGIST _____ DATE _____

DRILLER/HELPER _____

CHECKED/VERIFIED BY _____ DATE _____

MMOEY (2/88)

000148

FERNALD
RI/FS

WATER QUALITY FIELD COLLECTION REPORT

Time: _____
Page: ____ of ____

FADL REF # _____

PROJECT NAME		SAMPLE LOCATION	
PROJECT NUMBER		SAMPLE ID NUMBER	
DATE COLLECTED		RFA NUMBER	
TIME COLLECTED		C/C NUMBER	
COLLECTED BY		SAMPLE TYPE	

SAMPLING INFORMATION

BAROMETRIC PRESSURE _____

AIR TEMPERATURE _____

DO SATURATION IN AIR _____

WATER TEMPERATURE _____

DEPTH OF SAMPLE _____

WATER LEVEL _____

FIELD READINGS

	BEGINNING READ 1	MIDDLE READ 2	END READ 3
pH			
SPEC. COND. uMHOS/cm			
D.O. MG/L			

	BACKGROUND	BREATHING ZONE	DOWNHOLE READING
HNU			

METER CALIBRATION

pH Temp.	pH Std.	pH Std.	D.O. Temp.	D.O. Zero	D.O. Full Sc.	D.O. Calib. O_2	Spec. Cond. Temp.	Spec. Cond. Low	Spec. Cond. High	HNU Stand	HNU Lot #	HNU Span	HNU Reading
	4	7											
OK			OK				OK						

WEATHER CONDITIONS _____

ADDITIONAL REMARKS _____

TEST EQUIPMENT LIST

EQUIPMENT NUMBER	EQUIPMENT NAME

EQUIP.	NUMBER
BAILER	
HOSE/S	
PUMP	
FILTER KIT	

(T.D. ____) - (W.L. ____) = ____ Ht. of Water Column

____ Ht. of Water Column x ____ = ____ (3 Volumes)

____ Ht. of Water Column x ____ = ____ (5 Volumes)

ASI FORM 0. 9/01/92

DATE:	
TIME	
PAGE ___ OF ___	
PAGE:	

FERNALD RI/FS

PIEZOMETER SENSITIVITY TEST

PROJET NAME_____TESTED BY_____DATE_____

PROJECT NO._____

BORING NO. _____

PIEZOMETER NO. _____

TEST TRIAL NO._____

GWL BELOW TOP OF PIPE PRIOR TO TEST _____(M-scope, 0.01 foot accuracy)

TIME READING TAKEN _____

THE PIEZOMETER WAS FILLED WITH WATER. THE FOLLOWING DATA SHOW THE DROP OF WATER FROM THE TOP OF THE PIPE AS TIME ELAPSED.

ELAPSED TIME (MINUTES)	DROP OF WATER (FEET)

BASED ON THE ABOVE DATA, IT IS CONCLUDED THAT THE PIEZOMETER IS:

_____FUNCTIONING PROPERLY

_____NOT FUNCTIONING PROPERLY

000150

FERNALD RI/FS

PAGE ___ OF ___
PAGE

PIEZOMETER DATA SHEET

(1) DEPTH TO THE WATER LEVEL FROM THE TOP OF PIPE
(2) ELEVATIONS SHOWN ARE TOP OF PIEZOMETER PIPE

PROJECT NAME _____ PROJECT NO. _____

DATE & RECORDER	PIEZOMETER READINGS - FEET (1)							ELEVATION OF WATER LEVEL - FEET			
	# EL (2)	# EL.	# EL.	# EL.	# EL	# EL.	# EL.	# EL.	# EL.	# EL	# EL.

Reference Document No. _____
Page 1 of _____

REQUEST FOR ANALYSIS AND CHAIN OF CUSTODY RECORD

FERNALD
RI/FS

PROJECT/TASK NAME _____
PROJECT/TASK NO. _____
PROJECT MANAGER _____
SAMPLE TEAM MEMBERS _____
PROJECT CONTACT _____
PHONE NUMBER _____
OPERABLE UNIT NO. _____

DATE SAMPLES SHIPPED _____
CARRIER/WAYBILL NUMBER _____
LAB DESTINATION _____
LABORATORY CONTACT _____
DATE REPORT REQUIRED _____
PURCHASE ORDER NUMBER _____

BILL TO: _____
ORIGINAL DATA REPORT: _____
EDT TO: _____

SAMPLE NUMBER	SAMPLE LOCATION AND DESCRIPTION	DEPTH	DATE	TIME	SAMPLE TYPE	NO. OF CNTNRS.	SAMPLE VOLUME (each)	CONTAINER TYPE	PRESERV. ATIVE	TAL NUMBER	REQUESTED ANALYSES	CLP No.	CONDITION ON RECEIPT (INITIALS AND DATE)	DISPOSAL RECORD NO.

NOTE: If more than 11 lines are needed for one sample number, use a SEPARATE RFA/CC for the remaining sample parameters. Special Instructions:

Turnaround Time Required
Normal ☐ Rush ☐

Possible Sample Hazards: ☐ Radionuclides ☐ Volatile Organics
Non-hazard ☐ Flammable ☐ Skin Irritant ☐ Poison B ☐

Sample Disposal:
Return to Client ☐ Disposal by Lab ☐

1. Relinquished by
(Name, Company, Date, Time)

2. Relinquished by
(Name, Company, Date, Time)

3. Relinquished by
(Name, Company, Date, Time)

1. Received by
(Name, Company, Date, Time)

2. Received by
(Name, Company, Date, Time)

3. Received by
(Name, Company, Date, Time)

Comments:

Field Review _____ Date _____ / QA Review _____ Date _____

(Original) - To Laboratory Yellow - Field Technical Coord / QA / Project File Pink - Database Management Goldenrod - Sample Coordination

A91 FORM 0160 REV (1) 11/92

IV-9

000152

6145

SAMPLE CO[illegible]CTI[illegible] LOG

UNIQUE SAMPLE NUMBER	SAMPLE LOCATION	COLLECTOR INITIALS	COLLECTION DATE			COLLECTION TIME		COORDINATES		SAMPLE DEPTH INTERVAL	SAMPLE TYPE	SAMPLE MEDIA	PRESERVATIVE	SEQUENCE	BLANK	SPIKE	DUPLICATE	DUPLICATE OF SAMPLE NUMBER	SPLIT	SPLIT OF SAMPLE NUMBER	INITIAL
			MO	DY	YR	HR	MIN	NORTH	EAST												

FMPC RI/FS

VR No. 6145

VARIANCE REQUEST

Page ___ of ___

Date: _____

VARIANCE (Include Justification)

REQUESTED BY: _____ Date: _____

APPROVED BY: _____ Date: _____
Project Director/Designee

_____ Date: _____
Project Quality Assurance Officer

APPLICABLE DOCUMENT(S) AND SECTION No.(S)

ASI FORM 0006 Rev.(1) 3-1-91

LASFORM.C

VARIANCE LOG

PROJECT NUMBER _____ PAGE _____ OF _____

PROJECT NAME _____

DATE	VARIANCE GRANTED AND APPLICABLE DOCUMENT	RESPONSIBLE INDIVIDUAL

FERNALD
RI/FS

NONCONFORMANCE REPORT

PROJECT NO. _____ PAGE ___ OF ___

PROJECT NAME _____ DATE: _____

NONCONFORMANCE:

IDENTIFIED BY: _____ DATE: _____

CORRECTIVE ACTION REQUIRED:

TO BE PERFORMED BY: _____ DATE: _____

MUST CORRECTION BE VERIFIED? YES ___ NO ___

TO BE VERIFIED BY: _____ PREPARED BY: _____ DATE: _____

CORRECTIVE ACTION TAKEN:

PERFORMED BY: _____ DATE: _____

VERIFIED BY: _____ DATE: _____

CC:

Approved By: _____ Date: _____

_____ Date: _____

DATE	
TIME	
PAGE ___ OF ___	
PAGE	
Chkd. By	

FERNALD
RI/FS

Surface Measurements Field Logbook Form

Site: _____ Surveyors: _____

Area: _____ Recorded By: _____

Date: _____ Count Time: _____ Background: _____ CPM

_____ CPM

(-X)W←——Coordinates——→E(+X)

(-Y)S ←——Coordinates——→N(+Y)

Comments: _____

_____

_____

_____

_____

Scaler Model _____ Serial No. _____

Probe Model _____ Serial No. _____

Scaler Model _____ Serial No. _____

Probe Model _____ Serial No. _____

PIC Serial No. _____

000157

PAGE ___ OF ___
PAGE

FERNALD RI/FS

Shielded Delta-Gamma In-Situ Measurement

Background Assessment

Project Name: _____ Recorded By: _____

Date: _____ Time: _____

Delta Housing No.: _____ Daily Check Results: _____

Probe No.: _____ HV _____ (1000V) Threshold _____ (100)

Ratemeter/Scaler No.: _____ BAT _____ (OK) Window _____ (OUT)

Check Source No.: _____ Check Location: _____

Unshielded C_1* _____ C_2 _____ C_3 _____ Avg. Unshielded _____

Shielded C_1* _____ C_2 _____ C_3 _____ Avg. Shielded _____

Delta 1 _____ 2 _____ 3 _____ Avg. Delta _____

Bkg. Meas.	Location	Unshielded C_1*	Unshielded C_2	Unshielded C_3	Shielded C_1*	Shielded C_2	Shielded C_3	Delta
1								
2								
3								
4								
5								
6								
7								
8								
9								
10								

Average _____

Std. Dev. _____

Ave. ± 3 Std. Dev. _____

*Each count represents the counts per minute based on integration of 1000 cts. on the "C" scale of a ratemeter/scaler.

DATE	
TIME	
PAGE ___ OF ___	
PAGE	

FERNALD RI/FS

Shielded Delta-Gamma In-Situ Measurements
Field Radiation Measurements

Project Name: _____ Recorded By: _____

Shield Id. No.: _____ Calibration Factor: _____

Probe No.: _____ Comments: _____

Ratemeter/Scaler No.: _____ _____

Surveyors: _____ _____

_____ _____

Field Measurements

Measurement N-S	Location E-W	Unshielded Counts (CPM) C_1	C_2	C_3	Shielded Counts (CPM) C_1	C_2	C_3	Average Delta	Location For Further Consideration Yes	No

000159

WEEKLY CALIBRATION LOG GROUNDWATER

I.D. NUMBER	EQUIPMENT	CREW

Date: Initials: METER CALIBRATION

pH Temp.	pH Std.	pH Std.	D.O. Temp.	Zero	Full Sg	D.O. Calib. O_2	Spec. Cond. Temp.	Spec. Cond. Low	Spec. Cond. High	HNU Stand.	HNU Lot #	HNU Reading	HNU Span
	4	7						147	1413				
OK			OK				OK						

Date: Initials: METER CALIBRATION

pH Temp.	pH Std.	pH Std.	D.O. Temp.	Zero	Full Sg	D.O. Calib. O_2	Spec. Cond. Temp.	Spec. Cond. Low	Spec. Cond. High	HNU Stand.	HNU Lot #	HNU Reading	HNU Span
	4	7						147	1413				
OK			OK				OK						

Date: Initials: METER CALIBRATION

pH Temp.	pH Std.	pH Std.	D.O. Temp.	Zero	Full Sg	D.O. Calib. O_2	Spec. Cond. Temp.	Spec. Cond. Low	Spec. Cond. High	HNU Stand.	HNU Lot #	HNU Reading	HNU Span
	4	7						147	1413				
OK			OK				OK						

Date: Initials: METER CALIBRATION

pH Temp.	pH Std.	pH Std.	D.O. Temp.	Zero	Full Sg	D.O. Calib. O_2	Spec. Cond. Temp.	Spec. Cond. Low	Spec. Cond. High	HNU Stand.	HNU Lot #	HNU Reading	HNU Span
	4	7						147	1413				
OK			OK				OK						

Title: Use, Calibration, and Maintenance of the HNU PI-101

Procedure #: HS 015 Issued: _____

APPENDIX 10.2

HNU PI-101
MAINTENANCE AND CALIBRATION LOG

Instrument Serial #: _____ Last Factory Calibration: _____

UV Light Source Cleaned*: _____
Date

Ionization Chamber Cleaned*: _____
Date

Calibration Procedure (1 or 2): _____

Inspected by: _____ Date: _____

-- Source: _____

-- Type: _____

-- Concentration: _____

-- Lot #: _____

Results of Calibration:

-- Span setting: initial _____ final _____

-- Probe: _____

-- Instrument reading (ppm): initial _____ final _____

Results within ± 15% of calibration gas concentration: _____

COMMENTS: _____

_____

_____

Calibrated by: _____ Date: _____

*Due Monthly

000161

TITLE: Walk-Over Surveys Using a Large Volume Scintillation Detector	NO: RSL-2003
	REVISION: 1

LARGE VOLUME SCINTILLATION DETECTOR

INSTRUMENT CHECK
PROCEDURE RSL-2003

Scaler Model _____ Serial No. _____

Detector Model _____ Serial No. _____

Date	Battery Response	Bkgd (cpm)	Cesium Check Source (cpm)	Americium Check Source (cpm)	Surveyor's Initals

INSTRUMENT BASELINE DATA SHEET

Instrument Model:	Serial Number:	Cal. Due Date:
Check Source:	Source ID #:	Cal. Frequency:
Storage Location:	Inst. Coordinator Check Freq.:	User Check Frequency:

Date	Visual Ck.	Battery Ck.	Background	Source Value	Inst. Reading	Efficiency	Control Band	

Comments:		
Shipped To:	Dated Shipped:	Reason: ☐ Cal. ☐ Repair

ASI Form 0114 Rev. (0) 2/92

ATTACHMENT V

EQUIPMENT LIST

PROJECT EQUIPMENT LIST

DOCUMENTS

Required

Penetration Permit
Project Specific Health and Safety Plan
Radiological Worker Permit
Training Certification Card
Radiological Survey
Equipment Inspection
Project-Specific Plan
Chemical Hazardous Materials Work Permit

Blank Forms

Tailgate Safety Meeting
Field Activity Log
Sample Collection Log
Site-Wide Analysis Request/ Chain of Custody

SAMPLING SUPPLIES

Containers
Sample Labels
Permanent Indelible Markers
CPT Sample Extractor

METERS/DETECTORS

Beta Gamma Detector (Frisker)
Photoionization Detector (PID)

TAPES & PLASTICS

Silver Duct Tape
Yellow Radiological Tape
Clear Tape
Roll of Clear Plastic
Custody Tape

MISCELLANEOUS TOOLS

Scissors
Screwdriver
Hammer
Box Knife
Tape Measure/Yardstick
Carpenters Level

EXCLUSION ZONE SUPPLIES

Caution Tape
Wooden Stakes
Danger/Caution Signs/Flags

DECONTAMINATION SUPPLIES

Stainless Steel 5-Gallon Pails
Alconox
Elbow-length Nitrile Gloves
Brushes
Stainless Steel Water Sprayer
Deionized Water
Clear Plastic Sheeting
Chemical laboratory wipes

PERSONAL PROTECTION EQUIPMENT

Cotton Coveralls
Hard Hat
Steel-Toed Boots
Safety Glasses
Dosimeter
Latex Gloves
Cotton Glove Liners
Leather Work Gloves
Ear Plugs
Full Face Air Purifying Respirator

IDW SUPPLIES

Plastic Trash Bags

PERSONAL SUPPLIES

Water Dispenser
Paper Cups
Drinking Water
Ice

EMERGENCY SAFETY SUPPLIES & EQUIPMENT

Radio
Emergency Eyewash Station
First Aid Kit

ATTACHMENT VI

TYPE K
EXPANSIVE GROUT

Type K Expansive Cement from Southdown. A concrete solution to ordinary concrete problems.

You know the problems ordinary Portland Cement concrete can bring to a job. Shrinkage cracking. Curling. Permeability. They often occur soon after placement. That's because ordinary concrete shrinks significantly as it dries, causing internal tensile stress. When stress exceeds tensile strength, the problems begin. Early cracking and curling can lead to bigger problems in the years that follow as man and nature combine to attack shrinkage control joints with salt, extreme heat, freezing/thawing cycles, heavy floor or roadway traffic, airborne pollutants, marine spray and other deteriorants. Costly, time-consuming repairs or replacement become necessary.

How Type K works to dramatically reduce shrinkage and curling.

Type K Expansive Cement from Southdown, a true ASTM C 845 cement, minimizes drying shrinkage because it relieves internal tensile stresses that develop as it dries. It expands significantly during the seven-day moist cure period after placement, then, as it dries further, drops back to a zero expansion/contraction level.

The bottom line is that Type K's attributes add up to easier placement and longer life. And because the need for frequent jointing is decreased, larger placements can be made. Joint-free Type K placements of 12,000 to 15,000 sq. ft. are common and 20,000-plus sq. ft. placements have been made successfully.

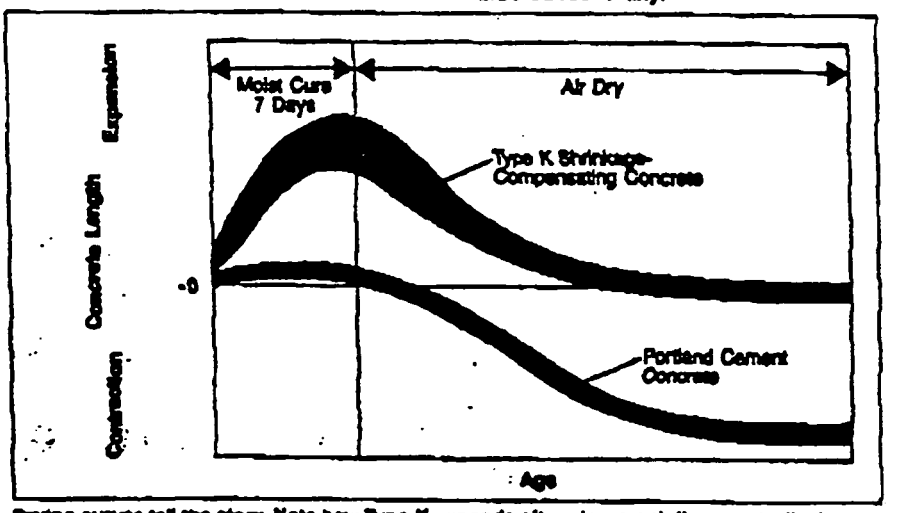

Drying curves tell the story. Note how Type K expands after placement, then gradually drops back to zero. Ordinary Portland Cement concrete shows little expansion, but significant contraction. Cracking and curling can result and a lifetime of potential problems are born.

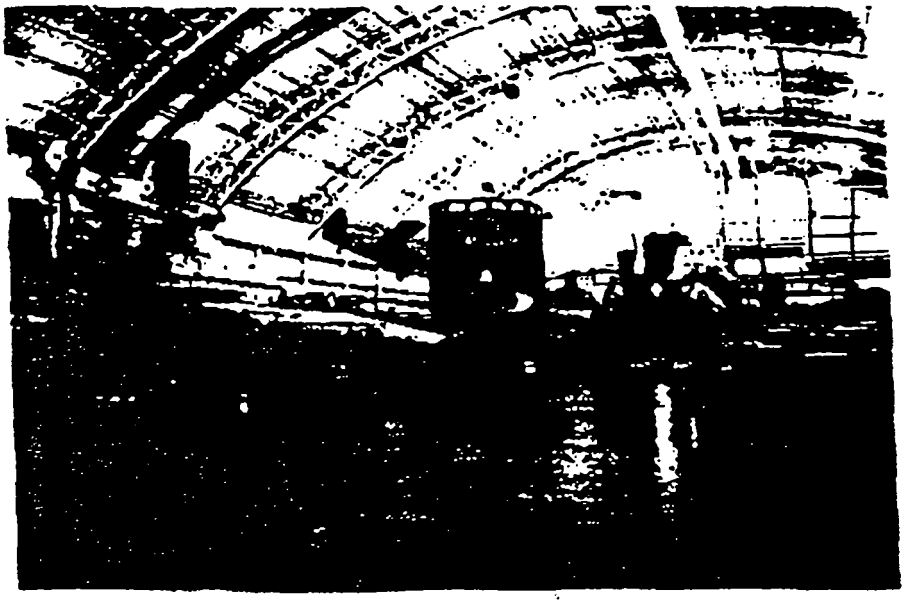

This Type K floor in the Air Force Museum in Dayton, Ohio is virtually jointless. In this area covering 160,000 sq. ft., there are nine placements and only 2600 lineal feet of jointing. Type K is Corps of Engineers approved.

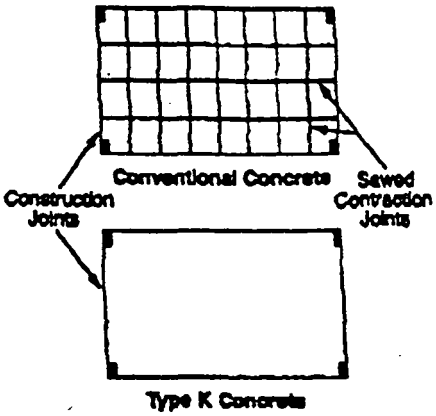

Instead of 32 jointed sections in a typical slab-on-grade project, Type K requires only one! Placements of 15,000 sq. ft. and more are possible without jointing.

Moist cure allows full expansion.

Type K works its magic during a seven-day moist cure period. During that time it reaches full expansion, then begins the contraction cycle. Ponding, wet coverings or moisture-proof covers are required during this important period to achieve maximum expansion.

What you need to know to specify Type K Expansive Cement.

Cement: Cement shall be Type K Expansive Cement, an expansive hydraulic cement conforming to ASTM C 845 as manufactured by Southdown, Inc., P.O. Box 191, Fairborn, Ohio 45324, 1-800-762-0040, FAX (513) 878-4289.

Aggregate: Any sound, nonreactive, well graded aggregate suitable for regular portland cement concrete as per ASTM C 33.

Admixtures: Generally, admixtures that are suitable for regular Portland Cement concrete may be used with Type K expansive cement. DO NOT USE CALCIUM CHLORIDE. Southdown representatives should be contacted to confirm compatibility of any admixture.

Cement Content: Recommended cement content is a minimum of 7.5 sacks (715 lbs.) per cubic yard for bridge decks, parking decks, treatment plants, containment vessels and other structures exposed to severe weather changes, de-icing salts and chemicals. For 4000 psi, non-air entrained concrete, recommended cement content is a minimum of 6 sacks (564 lbs.) per cubic yard. For 4000 psi, air entrained concrete, a minimum of 6.5 sacks (611 lbs.) per cubic yard is recommended.

Water/Cement Ratio: Water/cement ratio shall be a maximum of .50, surface, saturated, dry conditions.

Air Content: For air-entrained concrete, a 6% ± 1% air content is recommended.

Mixing Time: Limit mixing and placing time to 90 (ninety) minutes.

Slump: Slump shall be 5" ± 1" at time of placement.

Reinforcing Steel: A minimum of 0.15% reinforcement based on cross-sectional area is recommended by ACI 223 is required. Accepted engineering design practices for reinforced concrete recommended by ACI 318 should provide the required minimum reinforcement.

For slabs-on-grade, reinforcement should be positioned level in the upper half of the slab (preferably one-third the distance from the top), allowing for adequate cover.

Additional reinforcement requirements may be required as recommended by ACI 223.

Placement: Concrete should not be placed in ambient temperatures over 80 degrees Fahrenheit. Precautions should be taken to prevent concrete temperatures over 75 degrees Fahrenheit. Placement areas of 7,000-15,000 square feet are not uncommon with placements as great as 21,000 + square feet attainable, but should never be more than can be adequately placed and finished in one working day with adequate manpower. Placements generally should not exceed a 3:1 length to width ratio, but that ratio may be exceeded under special job conditions.

Finishing: Normal finishing techniques should be followed to produce the required finish. Due to Type K cement concrete's lack of bleed water, finishing operations should be started as soon as the concrete is ready. Should plastic shrinkage cracking occur, fog sprays should be available.

Curing: Continuous water curing with burlap for a minimum of seven (7) days.

Testing: Normal testing procedures as per ASTM C 31.

CAUTION: TYPE K EXPANSIVE CEMENT IS POISONOUS TO EYES AND CAN CAUSE SKIN IRRITATION. Contains Portland Cement. Avoid eye contact or prolonged contact with skin. Wash thoroughly after handling. In case of eye contact, flush with plenty of water for at least 15 minutes. Consult a physician immediately. Keep out of reach of children.

000168

Hazardous waste facilities/water treatment plants

In containment areas, you can't afford to build in cracks and leaks.

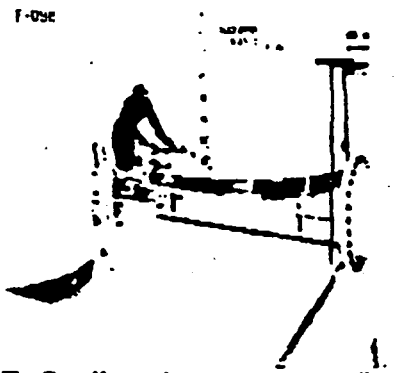

The Type K containment area surrounding these hazardous waste storage tanks has only one joint.

Type K Expansive Cement is fast becoming the standard concrete mix for the secure containment areas hazardous waste facilities, water and sewage treatment plants require. Jointing is cut to a minimum, eliminating costly water stops and built-in leaks.

Type K treats water and waste with great respect.

By totally eliminating jointing in some projects, Type K virtually eliminates the chance of leaking and seeping. In-place, Type K is much more impermeable than other concretes. Its ability to eliminate bleed water results in superior resistance to moisture and sulfate attack. And the higher slump means easier placement and greater pumping efficiency — without admixtures or changes in basic mix design.

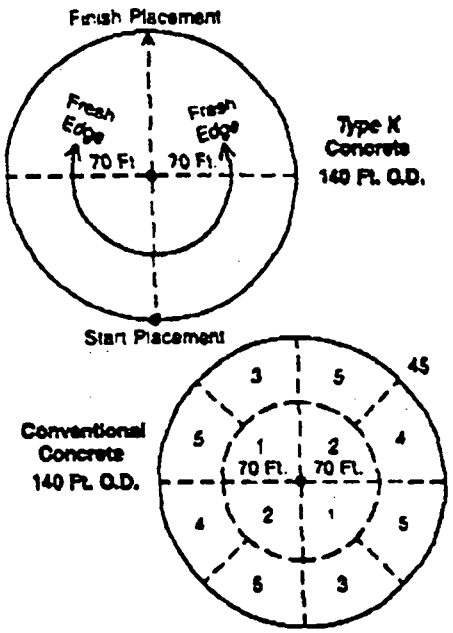

Compare the jointing in these two 140-ft. outside diameter containment vessels. The simple-to-execute Type K diagram shows why it is becoming the standard mix.

What if Type K had not been used?

Paul Grauer, Partner Woolpert Consultants

"If the containment tank shown below were not made of Type K, it would certainly show shrinkage cracks. We would have designed it with more joints and the joints themselves would eventually become maintenance problems. But as far as our firm is concerned, Type K is standard for a job like this."

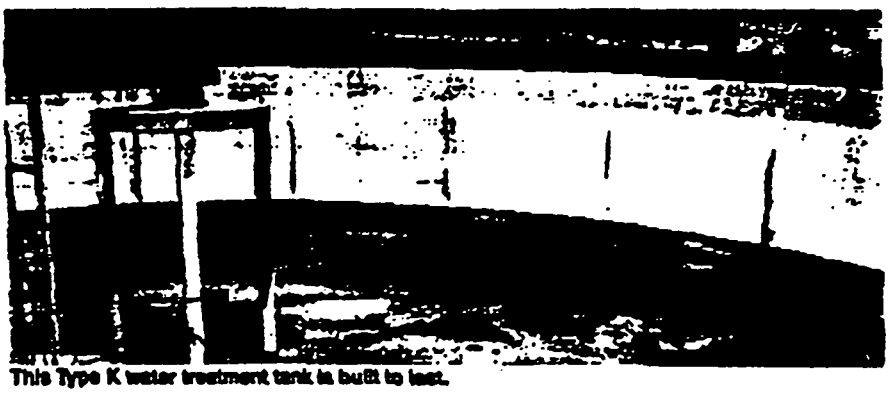

This Type K water treatment tank is built to last.

000169

Southdown makes Type K available throughout the U.S. Just contact the Southdown Company nearest you.

Southdown Companies

Southwestern Portland Cement Company

P.O. Box 191
508 E. Xenia Dr.
Fairborn, OH 45324
(800) 762-0040

P.O. Box 1547
U.S. Highway 80
Odessa, TX 79760
(915) 381-0190

100 N. Barranca Ave.
Suite 1050
West Covina, CA 91791
(818) 332-0075

3900 E. Mexico Ave.
Suite 601
Denver, CO 80210
(303) 758-1334

Kosmos Cement Company

15301 Dixie Hwy.
Kosmosdale, KY 40272
(502) 935-7331

Neville Island
Pittsburgh, PA 15225
(412) 771-5500

Florida Mining & Materials Co.
16301 Ponce De Leon Blvd.
U.S. Highway 98
Brooksville, FL 34614
(904) 796-7241

Dixie Cement Company
6212 Cement Plant Road
Knoxville, TN 37924
(615) 522-1171

Transit Mixed Concrete Company
4760 Valley Blvd.
Los Angeles, CA 90032
(213) 223-4101

Florida Mining & Materials Co.
(Concrete Products)
13228 N. Central Ave.
Tampa, FL 33612
(813) 933-6711

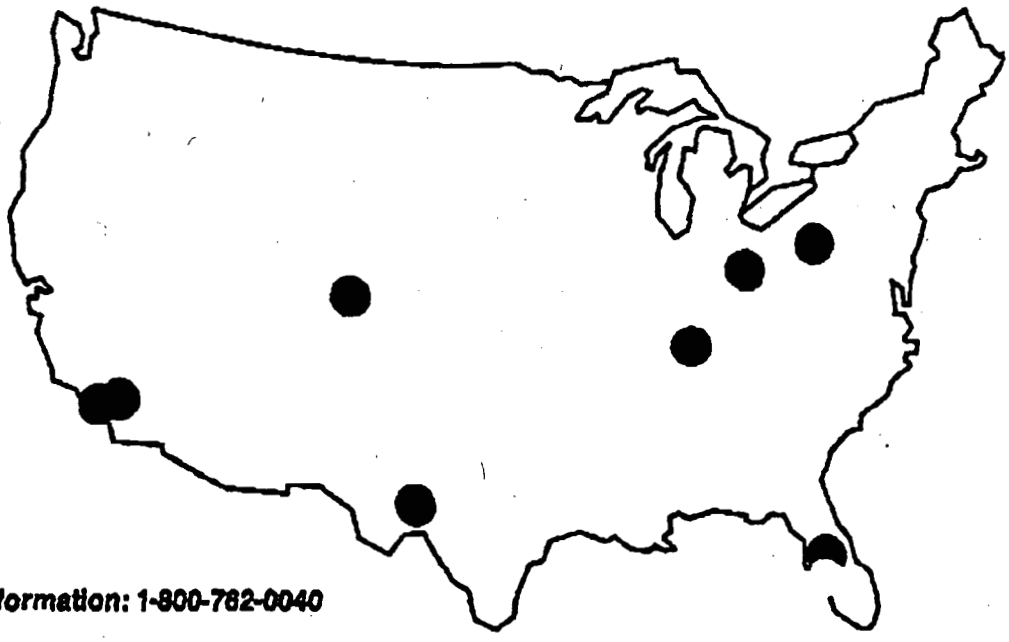

Southdown Type K Central Information: 1-800-762-0040

Southdown, Inc.
1200 Smith Street, Suite 2400
Houston, Texas 77002

FAX COVER SHEET

Date: 8-18-94	
To: Seth Gifford	**Fax No.:** 513-738-9150
Company:	
From: Jerry Collins	**Fax No.:** (513) 879-8392
Southwestern/Southdown	
Number of pages to follow: 7	
Fax sent by: J. Collins	
To verify or if any problems, please call: (513) 879-8373	
Special message: Per your request	

Southdown, Inc. — P.O. BOX 191 — FAIRBORN, OHIO 45324 — (800) 762-0040

When Type K hits the deck, long-term drying shrinkage problems hit the road.

These bridge decks, located within 50 feet of each other, were both built in 1973 by the same contractor. The Type K deck (left) shows no signs of deterioration. The Type I Portland Cement deck (right) shows cracking and chloride decay.

Type K can take all the punishment man, nature and time can hand out. That's why forward-looking governments, commissions and corporations are increasingly specifying it for use in bridge decks and parking garages.

The Ohio Turnpike and Type K.

G. Alan Plain
Deputy Director/Chief Engineer
Ohio Turnpike Commission

"Our decision to specify Type K was predicated on drying shrinkage problems we had experienced with other cements. Our quality control program included requiring our contractors to pour as early in the morning as possible and use of the water cure process. We hired independent testing laboratories to make sure we got the specifications we asked for. We are very pleased with the results we are getting."

Why the Ohio Turnpike turned to Type K.

In 1984, the Ohio Turnpike changed its specifications to include Type K for use in hundreds of bridge deck replacements. The specifications were changed to minimize widespread drying shrinkage problems and deck deterioration that resulted. Since then, more than 300 bridge decks have been placed using Type K.

The Ohio Turnpike bridge deck replacement program relies on Type K's unique ability to compensate for shrinkage cracking. Its lower permeability provides greater long-term protection than standard Portland Cement concrete.

Study proves Type K has less drying shrinkage cracking.

A study by the Ohio Turnpike Commission covering bridge deck replacements from 1983 to 1989 compared 271 Type K bridge decks to 71 decks using Type I or II cement. Excluding structures poured under live load conditions, *drying shrinkage cracks occurred in only 2.3% of the Type K decks, but in 73.5% of decks using other cements.*

Parking deck durability is increased with Type K.

Parking garages are very similar to bridge decks because they are really a series of bridges on top of each other. But unlike a highway bridge deck, a parking garage doesn't have the benefit of rain to wash away accumulated salts. Type K is ideal for these structures because it can prolong life and cut maintenance costs.

Type K is ideal for parking garages — for the same reasons it is superior on bridge decks.

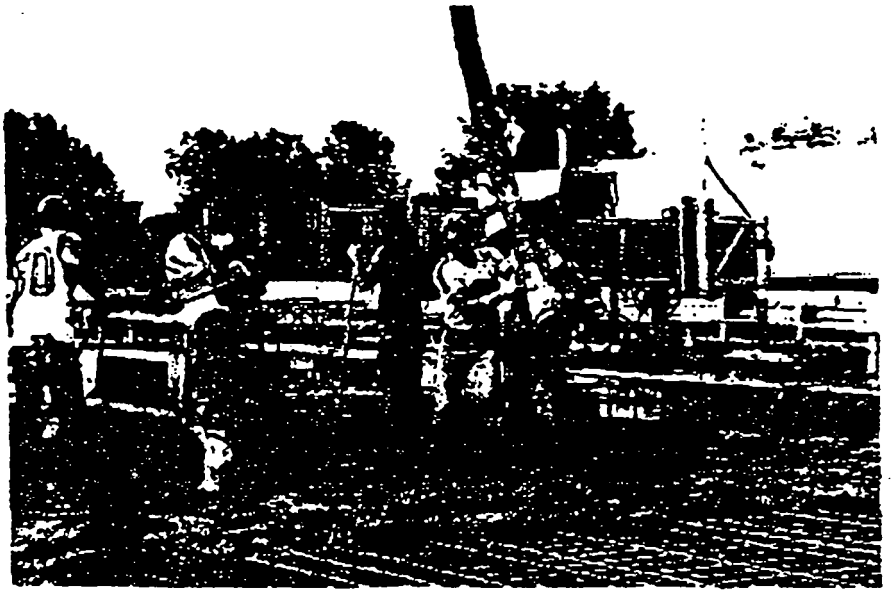

Surprise. The in-place cost for Type K is often no more than for standard concrete.

Higher slump, no bleed water, faster finishing.

Type K Expansive Cement in concrete is placed at a higher slump than ordinary concretes, yet substantially reduces drying shrinkage cracking. There is no bleed water, despite higher water demand, and the finishing process is shortened. Curling problems — and the costly maintenance problems that inevitably follow — are eliminated.

Internal reinforcing controls Type K's expansion properties.

Type K yields maximum benefits when its expansion takes place against restraints such as welded wire fabric, epoxy-coated rebars or other reinforcements prescribed by ACI.

Placing internal reinforcement at the upper half of the slab, preferably within two inches of the surface, is recommended for greatest effect.

Let's talk economics.

Type K can bring its permanence to many jobs at an in-place cost often no more than conventional concrete. No special equipment is required. Normal practices can be followed for mixing, placing and finishing. And larger placements are the rule with Type K, so labor costs can be less.

But that's only half the story. Type K's reduced permeability, resistance to environmental deteriorants, cracking and curling can result in longer life and lower maintenance costs.

Type K: Best in the long run.

Paul Gruner, Partner
Woolpert Consultants

"We have extensive experience with Type K in both bridge decks and water treatment plants. We believe there's a definite long-run benefit in decreased maintenance costs and longer life. Cracking allows detrimental elements to enter the concrete, which promotes early deterioration. By eliminating cracking, you keep water, chemicals and other influences out of the concrete and it lasts longer."

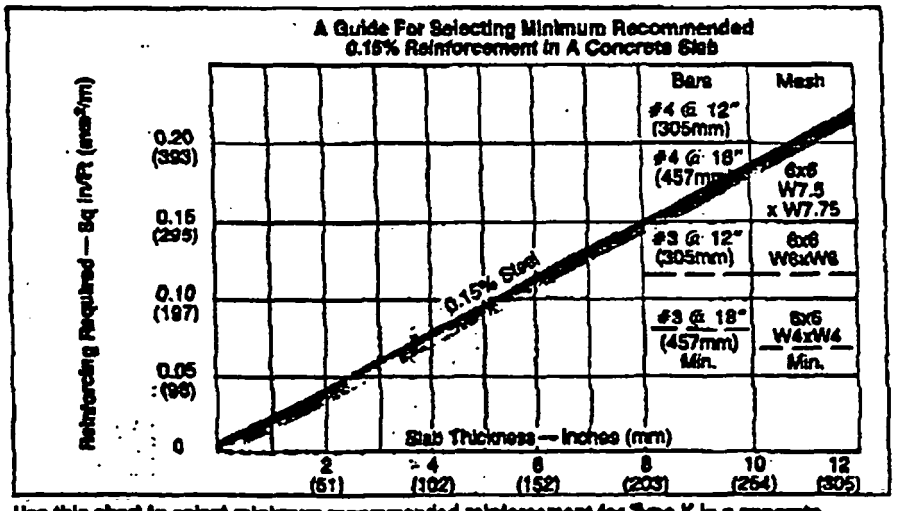

Use this chart to select minimum recommended reinforcement for Type K in a concrete slab. ACI-223 recommends a minimum reinforcement of 0.15% of the gross sectional area of the concrete.

Type K means fewer joints, fewer problems in Slabs-On-Grade.

Placing Type K in slab-on-grade projects such as warehouses, factories, food/beverage processing facilities, terminals, roads, aircraft hangers and runways means building a surface that will last a *long* time with less maintenance.

The secret to durability is locked in the product.

Type K is carefully produced by Southdown companies by intergrinding anhydrous calcium sulfoaluminate clinkers with Portland Cement clinkers in precise proportion to meet the ASTM C 845 specifications for expansive hydraulic cement, which produces controlled expansion during the curing process. As a result, zero expansion/contraction is achieved after cure, so shrinkage control joints can be reduced dramatically.

Type K means less maintenance cost.

Bill Lantz
Lantz Jones Nebraska
Consulting Structural Engineers

"I think what Type K brings to the party is a crack-free floor, which allows the owner to minimize his maintenance costs and keep the facility clean."

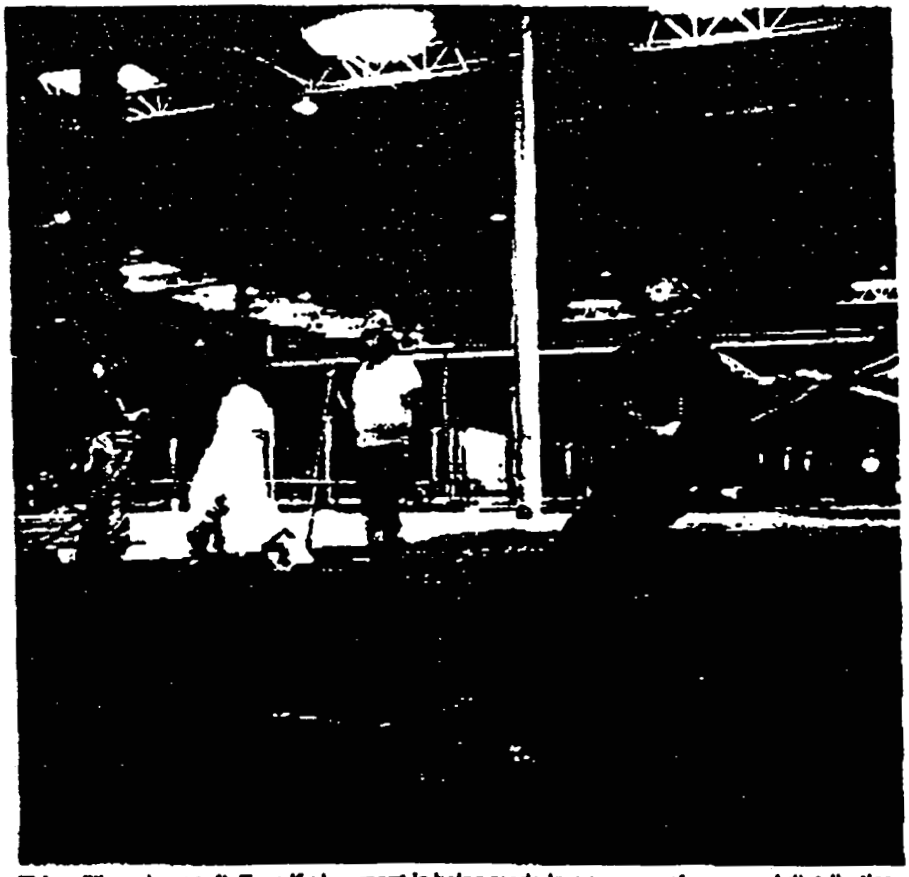

This million-plus sq. ft. Type K placement is being made in a new warehouse and distribution center for one of the nation's largest fashion retailers.

ATTACHMENT VII

ROTASONIC™ DRILLING

6145

ALLIANCE
ENVIRONMENTAL, INC.
117 INDUSTRY ROAD
MARIETTA, OHIO USA 45750 9355

ALLIANCE
ENVIRONMENTAL, INC.

Charles Ray Clough
CET, MGWC

Telephone: 614/373-2190
Telefax: 614/374-5908

117 Industry Road
Marietta, Ohio USA 45750 9355

000176

ALLIANCE ENVIRONMENTAL, INC.

DRILLING EXPERTS IN

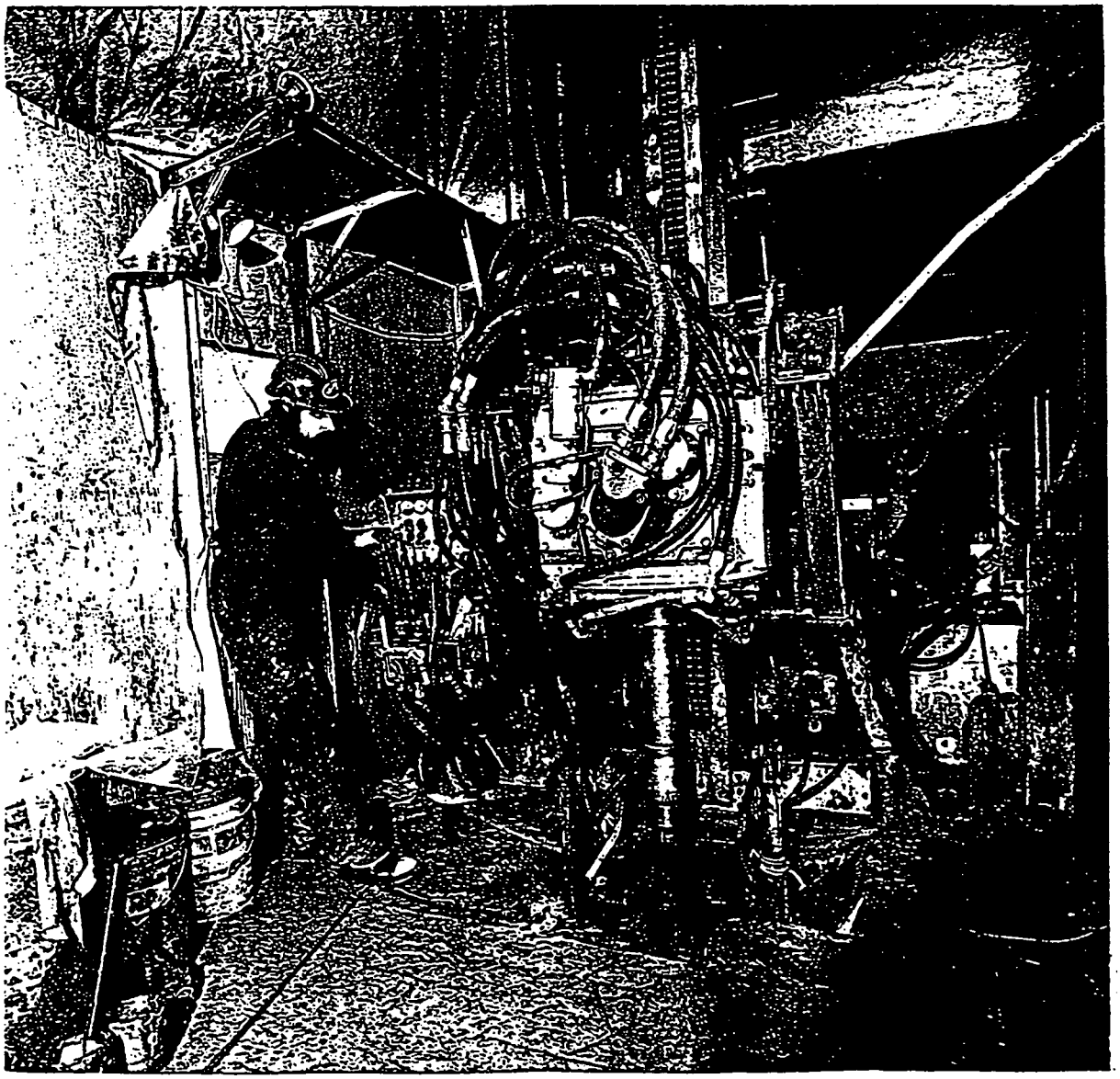

"ROTASONIC DRILLING"

000177

ROTASONIC

Using basic principles originally applied to the placement of piles through drilling by means of resonant vibrations, equipment and techniques have been perfected to permit the extraction of near perfect CONTINUOUS CORE SAMPLES and the installation of MONITORING WELLS from almost any form of overburden.

Penetration of unconsolidated materials of up to ONE FOOT PER SECOND is achieved by vibration at the cutting edge agitating an entry through the overburden to allow the drill pipe to pass with minimal disruption.

Additionally, the drill head is provided with a rotational drive that effects contact of solid material with the drill bits to maintain a continuous penetration that utilizes both forms of cutting force WITHOUT THE NEED FOR DRILLING FLUIDS.

The ROTASONIC drill head is a hydraulically activated unit that imparts high frequency wave vibrations into a drill string to effectuate a cutting action. Due to the high forces developed by the resonant head and the external flushing nature of the drill string, excess formation material generated by the cutting face of the bit is forced into the borehole wall thus resulting in the generation of NO cuttings during the drilling process.

In addition to our 2 truck mounted ROTASONIC drill rigs, we are currently building and testing an ATV track mounted unit which will be ready sometime in 1993.

If you would like more information on ROTASONIC, please contact:

ALLIANCE ENVIRONMENTAL, INC
Ray Clough
117 Industry Road
Marietta, OH 45750-9355
(614) 373-2190 / FAX (614) 374-5908

ROTASONIC DRILLING TECHNOLOGY

Sonic drilling differs substantially from conventional drilling techniques. The sonic technology was perfected in Canada about 1974 under patents held by Dr. A. G. Bodine.

Operationally, there is neither a convention bit nor drill string. The relatively large diameter drill bit, shown in Figure 1, consists of hardened steel with tungsten carbide sprayed onto the exterior surface. Drill casing, similar to auger flights without the flutes, constitutes the remainder of the drill string.

Drilling is accomplished by means of a sonic head located on the drilling derrick (see Figure 2). The sonic head produces a frequency close to the natural frequency of the drill string (between 70-15- hz) allowing the drill string to act as a flywheel, transferring the energy of the drill string in bursts to the bit. Drill cuttings are displaced past the bit into the lexan core tube which rests on top of the bit or are imbedded into the side of the borehole.

Actual drilling is affected three ways depending upon the material being drilled:

- Displacement where soil or rock particulates, such as unconsolidated soil, are fluidized by the vibration of the drill column.

- Shearing which is affected when drilling in clays and shales. The induced amplitude must be sufficiently large to overcome the elasticity of the medium.

- Fracturing occurs when the inertial moment of the bit is sufficiently large to cause fragmentation.

Borehole specific conditions dictate the necessity of using rotation while coring in each sampling location. Depending upon whether or not rotation is necessary, the actions of a sonic drill are similar to split tube sampling when not utilizing rotation and the sonic rig mimics conventional coring or downhole hammering when rotation is used.

Sonic drilling utilizes limited weight on the bit surface, relying on the inertial moment of the induced vibration and slow rotation to affect penetration. Because this method does not require air or fluids for the removal of cuttings it is ideal for environmental sampling where samples may be adversely affected by induced contamination. This method is believed to produce more representative samples than conventional drilling techniques for these reasons. Sampling for volatile organics is a prime example of how this feature can benefit sample collection. This method is also ideal for sites where high energy impact or high rotation pose a safety threat to personnel or the environment by significantly decreasing the risk of combustion, explosions, or detonations.

The speed, efficiency, sampling procedure, depth capacity, and versatility of the Rotasonic machine make it a very cost effective and productive way of drilling environmental borings and installing monitoring wells.

THE ROTASONIC "SONIC" DRILL:

Alliance Environmental, Inc. (AEI) was incorporated in August 1992 and is based in Marietta, Ohio. Even though we are a new company our personnel have many years of experience in geotechnical and environmental drilling all over the United States. We now specialize in Sonic drilling, a state of the art drilling technique which permits rapid and complete recovery of both unconsolidated sediments and bedrock. The drilling equipment is easily mounted on multi-wheeled vehicles, tracked vehicles, skids or barges permitting access to the most difficult terrain conditions.

The Sonic drill is capable of penetrating and coring materials to depths of over 400 feet. It provides a relatively undisturbed 9 centimeter diameter continuous core of unconsolidated sediment and bedrock with high recovery rates. The Sonic drill is capable of penetrating and coring either dry or water-saturated clay, silt, sand and gravel, and till (including boulders) at rates of up to one foot per second. This rate of penetration far exceeds that of conventional rotary drilling techniques. Softer bedrock types, such as unweathered granite and volcanic rock can also be recovered.

Slow rotary action and high frequency resonance is imparted down the drill stem to the cutting bit facilitating rapid use of drilling fluids. As a result , geotechnical parameters such as grain size, relative density, and water content and geological properties such as composition, material contacts, and sedimentary structures are well preserved. Increased rates of penetration in solid bedrock and large boulders are achieved by flushing water to the cutting edge.

Up to 15 meters of core can be drilled in a single run prior to sample extraction. Casing, with an inside diameter of 13 centimeter, is flushed down over the drill rods using either water or drilling mud to prevent caving and contamination of samples. The large inside diameter of the casing allows for easy installation of piezometers for monitoring wells as well as PVC pipe for downhole geophysical logging after completion of the hole.

The Sonic drill has been utilized by the mineral exploration sector for programs of drift prospecting in glaciated terrain. Large diameter, continuous core provides large samples and detailed stratigraphic information. Geotechnical engineers and hydrogeologist have found this method to be an excellent tool for delineating subsurface stratigraphic units including potential aquifiers and load bearing materials. Quarry operators have used the sonic drill for delimiting the extent, thickness and quality of buried aggregate deposits. Government and academic agencies have found the sonic drill to be one of the best methods for obtaining large diameter, continuous core as an aid for deciphering geological history.

"DRILLING AND SAMPLING BY ROTASONIC METHOD"

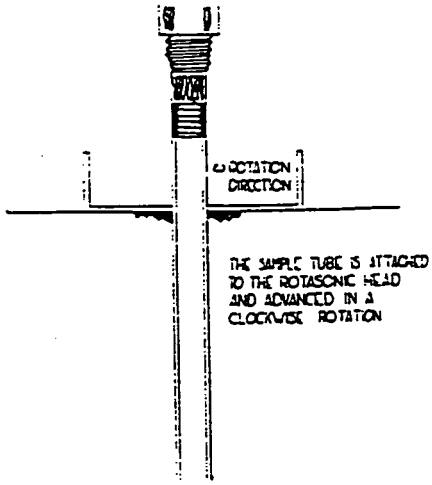

1

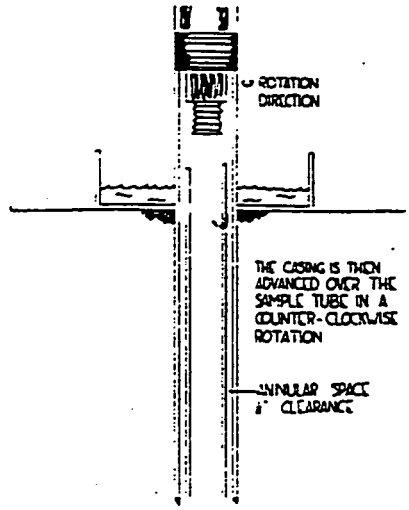

2

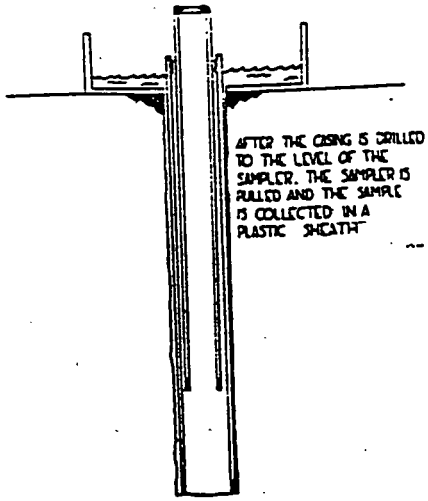

3

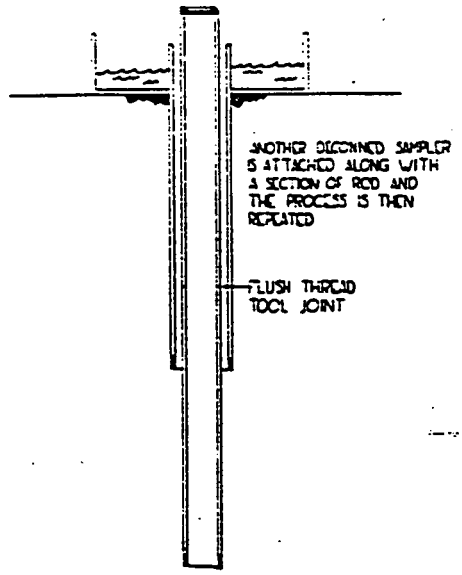

4

000181

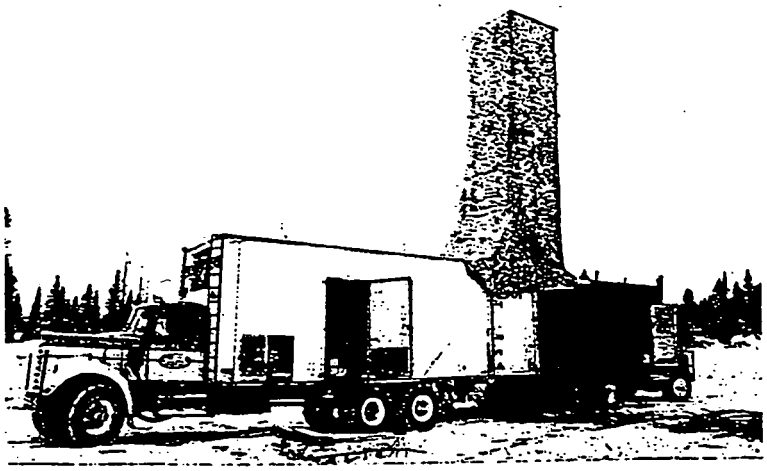

Rotasonic Drilling

A state of the art drilling technique which permits rapid and complete recovery of both unconsolidated sediments and bedrock.

The rotasonic drill has demonstrated the capability to produce exact continuous core samples essential in mining exploration and geotechnical and hydrogeological evaluation. This drilling method can also be utilized in pipeline and seismic exploration, pile driving, building and bridge construction foundations, water wells, installing transmission tower anchors, and placer mining.

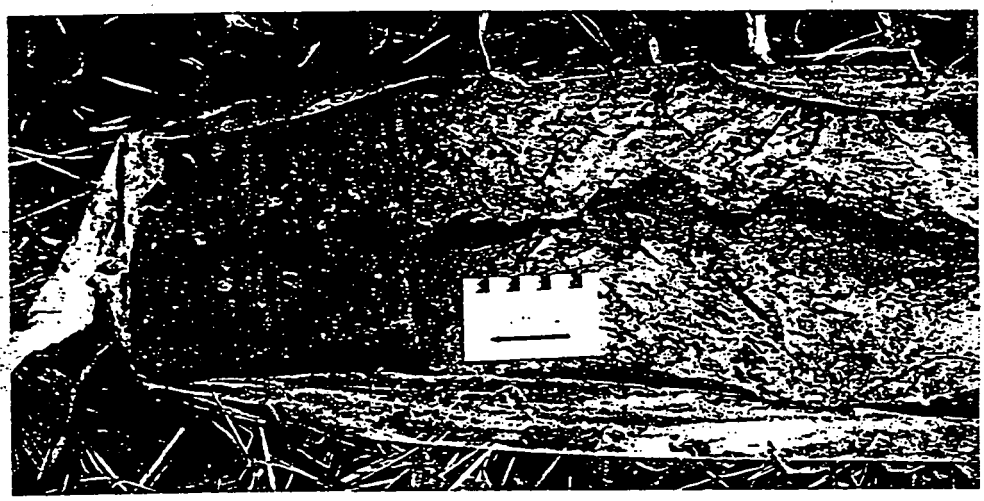

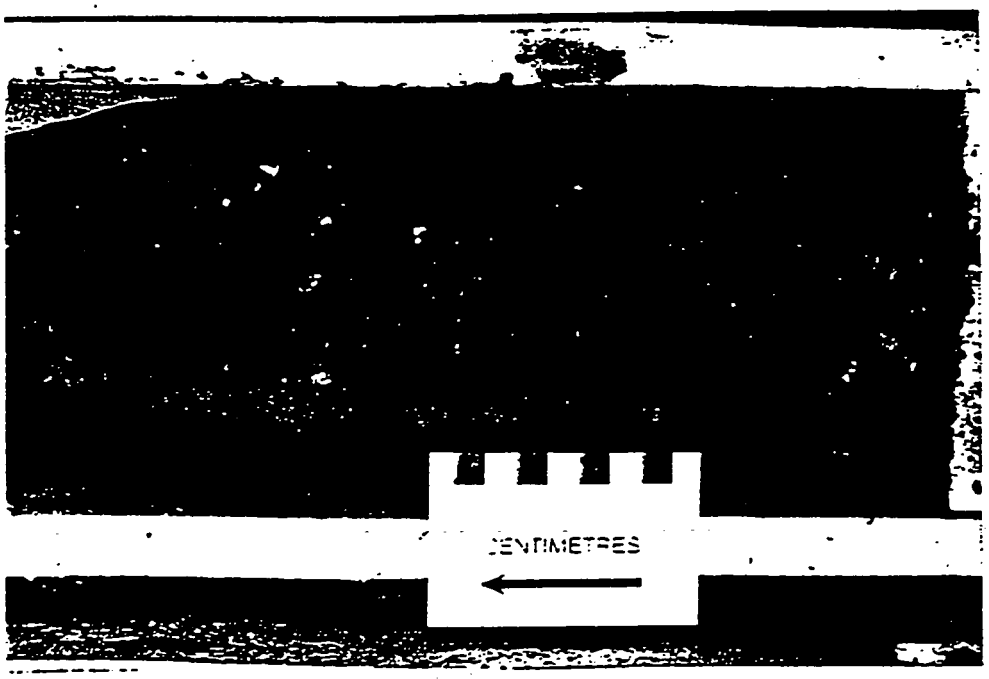

The rotasonic drill is capable of penetrating and coring materials to depths of over four hundred feet, with a relatively undisturbed 4 inch diameter continuous core in consecutive five foot long sections.

The five inch inside diameter of the casing allows for easy installation of piezometers for monitoring wells as well as PVC pipe for downhole geophysical loggine after completion of the hole.

Rotasonic Method

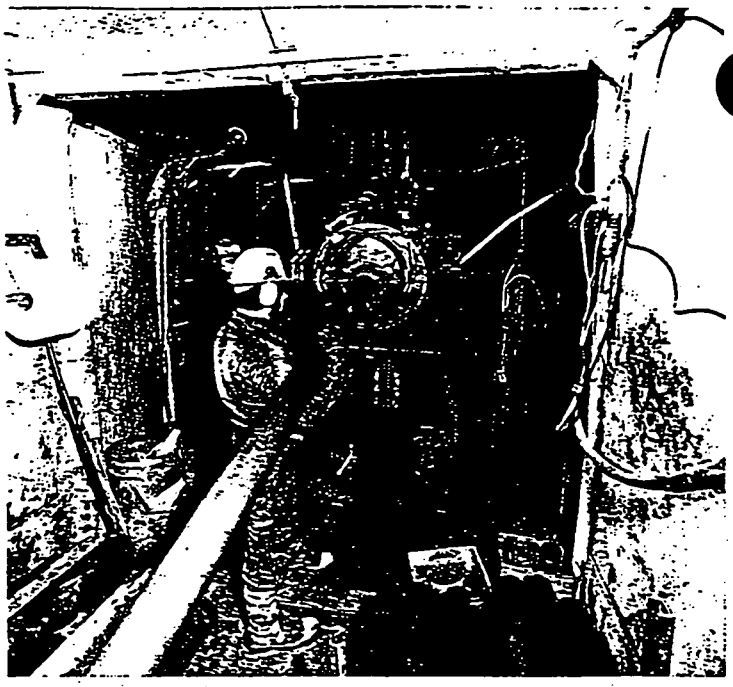

We have modified the rotasonic drill to advance production and quality to meet the customer's needs.

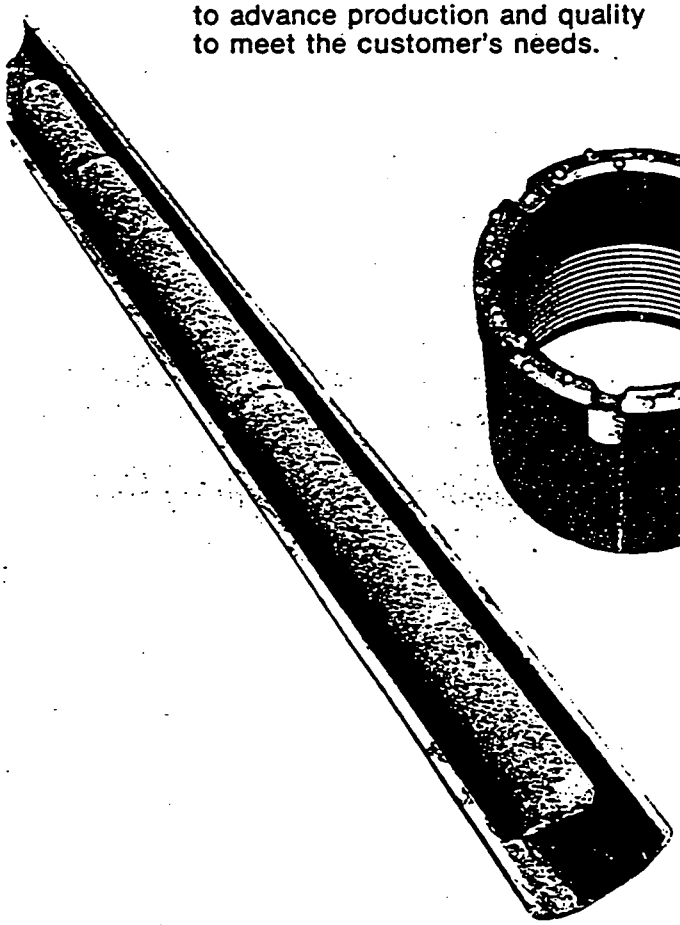

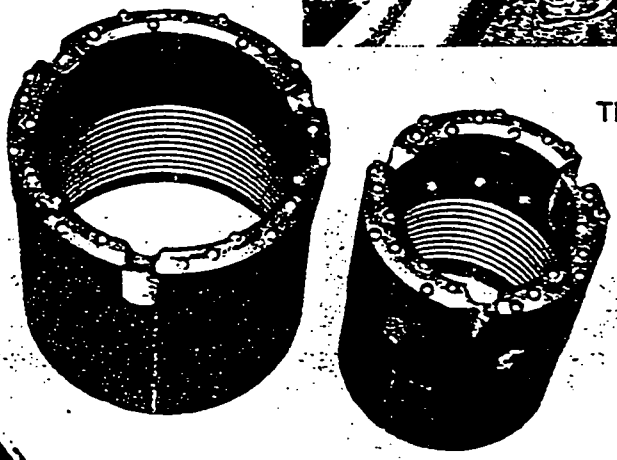

The rotasonic drill head rotary action and high frequency resonance, produced by two synchronized rollers, imparted down the drill stem to the cutting bit, facilitates rapid penetration.

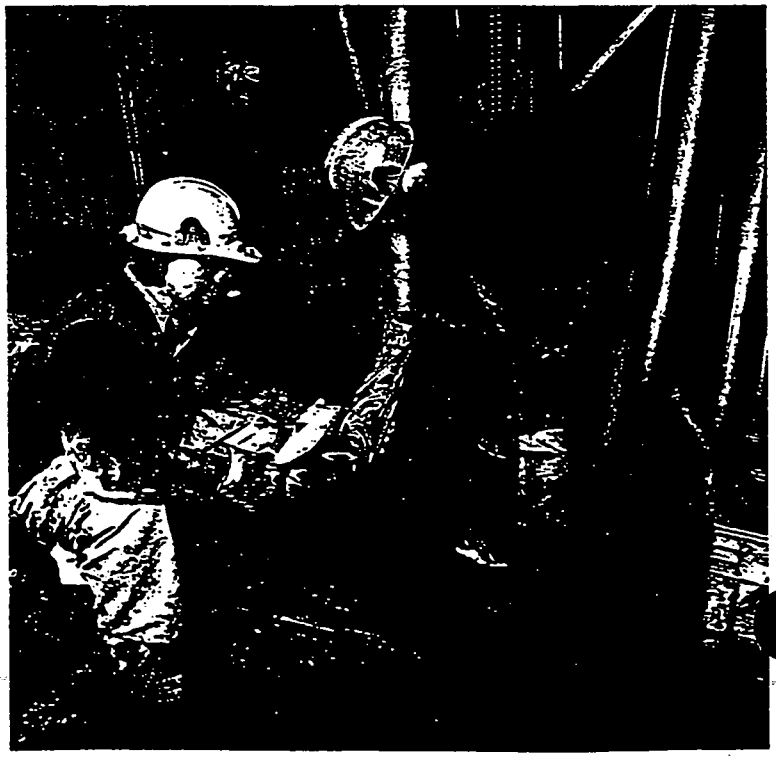

Our highly skilled operators can control the rate of vibration and penetration assuring a virtually undisturbed core sample. Since no drilling fluid is required in the process and friction holds the core solidly in the pipe, it produces a sample of high accuracy.

ROTASONIC
The "Wave" of the Future

By

Charles Ray Clough, CET, MGWC
Alliance Environmental, Inc.
Marietta, Ohio

Let's pretend you are assigned as project manager to perform a soils and ground water investigation for a Superfund site. Part of your responsibility is to develop and supervise the drilling and sampling portion of the investigation. The problem is that the profile you need to penetrate consists of till material with high gravel content grading to boulder size. This till overlays sand and gravel which is interbedded with silty-clay lenses.
Due to the presence of perched zones, the water table is fairly high, causing sands to "heave" into the sampling tools.

Your first choice to consider would be hollow stem auger (HSA) that could penetrate the tills. However, the depths to be sampled and the boulders and "heaving" conditions tend to limit this application. HSA is also not conducive to installation of multi-cased wells and the large amount of cuttings produced by the HSA method present a difficult and costly disposal problem.

Air-rotary drilling is capable of penetrating the tills, cutting through the boulders, and meeting depth requirements, however, cuttings are hard to control and costly to handle. Presence of the heaving sands presents a problem for multi-cased well

installation which require large and expensive rigs. Samples are difficult to obtain because the entire drill string must be pulled for each sample.

Use of a casing advance system in conjunction with air-rotary or air-hammer drilling is an advantage for the driller, but large volumes of hard to control cuttings and dust at the borehole surface are produced. Also, excessive use of any fluids or lubricants for environmental drilling is frowned upon by your customer.

Mud-rotary is quickly eliminated as a possible solution due to the introduction of fluids in this method which can affect the sampling and the potential for downhole contamination. This method also can have extensive circulation loss in highly pervious sand zones. Individual small saturated zones are difficult to find when the mud-rotary method is used.

Reverse circulation rotary would be an effective method for multi-cased wells, but again, sampling is difficult and great volumes of cuttings and fluid are generated causing expensive disposal problems. Use of a dual wall system in reverse circulation , helps in the sampling effort, is conducive to monitor well installations and is effective in penetrating unconsolidated, coarse, alluvial deposits. However, the use of fluids and the volume of cuttings generated still pose a major problem for your project.

Cable tool drilling might yield the best solution to this drilling situation. Penetration of all drill zones can be effected, multi-cased wells can be installed, and discrete samples can be obtained. Cuttings are produced but are in a more manageable volume than the earlier discussed methods. This method, however, is very slow and several rigs might be required to obtain the necessary results within your allotted time frame. The assignment of additional rigs and personnel increases your client's cost (and exposure).

Perhaps there is a drilling technique which penetrates a wide range of media including boulders, allows installation of multi-cased wells, requires minimal or no fluids, is conducive to monitor well installation, can obtain a continuous, contained, in-situ profile sample, eliminates cuttings and is fast (i.e. 2 to 3 times as fast as HSA and 8 to 10 times as fast as cable tool).

Sounds too good to be true? This, in fact, can be accomplished with the Rotasonic drill.

What is rotasonic drilling? How does it differ from more conventional drilling techniques?

Rotasonic technology was developed in Canada in the mid - 70s and was used primarily for minerals exploration. The system does not use a conventional bit or standard drill pipe. The bit used in rotasonic drilling consists of a hardened steel ring with tungsten carbide inserts. The drill casing makes up the balance of the drill string.

The heart of rotasonic drilling is the oscillating head unit which produces the sonic wave necessary to achieve penetration of the drill media. The oscillator operates at a frequency close to the natural frequency of the drill column allowing the drill string act as a flywheel. To keep the sonic wave from shaking the rig apart and to enable all the sonic wave to be transmitted to the drill column, the oscillator is isolated from the mast by means of an "air spring."

This spring consists of a piston set within a closed cylinder. Compressed air is introduced to each side of the piston which serves to "cushion" the vibrational motion of the oscillator. The effectiveness of the spring is easily demonstrated when the rig is drilling. The ground all around the rig shakes, but if you touch the rig itself, no vibration is sensed.

Drilling is affected by three ways depending upon the material type being penetrated.

*Displacement where the soil or rock particles are fluidized by the vibration such as in sands;

*Shearing occurs when drilling clays or shales. The amplitude of the sonic wave must be large enough to overcome the cohesion inherent in clays and shales.

*Fracturing of the fragmented material - This is how the rotasonic rig penetrates rocks and boulders.

To assist in achieving drill penetration, a low speed rotation is imparted to the drill column. This enables the bit to be in constant contact with solid material and obtain the maximum effect of the vibrational forces directed to the bit or material from the drill stem. This rotational ability also allows quick, hands-free, screwing and unscrewing of drill tools. Rotasonic drilling does not depend on a heavy down pressure on the bit which eliminates excessive wear on the bit. Because this method does not require fluids or air to clean and cool the bit surface and remove cuttings, it is ideal for environmental sampling where samples would be adversely affected by cross contamination with drilling fluids or air.

Since there is no injection of drilling fluid required and because the core is retained in the inner sample by friction, the materials flow into the sampler with a minimal amount of disturbance or

compaction. This produces a sample of very high in-situ representation in a wide range of soil or rock types. In addition, the secured sample is extruded into a plastic sheath, minimizing exposure to sampling personnel.

The large inside diameter of the casing allows for easy installation of piezometers for monitoring wells. The use of vibrational energy as the outer casing is removed eliminates "bridging" of the well materials, (i.e. sandpack, seal and grout).

So, Mr. Geologist, after a careful analysis of the available technology, you have arrived at an innovative solution to your particular drilling site problems. Furthermore, the time saved and lack of high volumes of generated disposable waste, inherent safety features and excellent sample recovery yield considerable project dollars saved for your client.

Application of Rotasonic Drilling at a Remedial Investigation Site

Nancy K. Zeller
PRC Environmental Management, Incorporated
Cincinnati, Ohio

Kostas Dovantzis, Ph.D., P.E.
PRC Environmental Management, Incorporated
Chicago, Illinois

Wm. Turpin Ballard
United States Environmental Protection Agency
Chicago, Illinois

ABSTRACT

The rotasonic drilling process combines vibrational and rotational forces to advance drill pipe in a borehole. The process is effective in both unconsolidated and consolidated materials. Drilling and well installation require considerably less time than that required by more traditional methods. In situ ground-water sampling and field screening can be conducted easily in conjunction with this technology. The rotasonic drilling technology uses little or no added water during continuous core sampling of overburden. Small, controlled amounts of water, or an environmentally safe lubricating fluid, are used when advancing drill pipe in the borehole, drilling in some bedrock conditions, or installing wells. The process generates only small volumes of cuttings.

Rotasonic drilling is being applied during remedial investigation activities at a federal facility in Ohio. Traditional drilling technologies, including the use of cable-tool and hollow stem auger rigs, applied during the first remedial investigation resulted in schedule delays and excessive quantities of site-generated hazardous waste. Delays in the remedial investigation schedule, and ultimately the remediation and cleanup schedule, resulted when cable-tool rigs were used to drill the deepest boreholes and emplace monitoring wells at well cluster locations. In addition, an interagency agreement between the federal government and the State of Ohio

requires that excess cuttings, lubricating fluids, and muds be contained and stored, initially, as hazardous waste. Because both of these drilling techniques generate large quantities of on-site waste, the capacity of the designated storage area was soon overwhelmed. These problems prompted the government and its contractors to explore alternative drilling techniques for future investigations.

Earlier field tests of the rotasonic drilling technique were successful. A 60-foot borehole was drilled, continuous core samples obtained, and a monitoring well installed in less than 4 hours. Site-generated drilling waste fit into two 55-gallon drums. This prompted the federal government to select the rotasonic drilling process combined with continuous core sampling to characterize subsurface conditions during the second phase of the remedial investigation activities. Rotasonic drilling met all site-specific investigation objectives; as a result, the federal government plans to use this technology for future remedial investigations.

INTRODUCTION

Remedial investigations at federal facilities often address widespread contamination with multiple sources or source areas. Information on a large scale is necessary to determine the potential impact of these facilities on human health and the environment. One primary objective of these investigations is to determine the potential for contaminant migration from the facility into on- or off-site drinking water aquifers. which requires extensive subsurface characterization. The necessary detailed lithologic, hydrologic, and chemical data are obtained through drilling and sampling site soils and ground water. Exploratory boreholes are drilled to examine the subsurface lithology and to locate the water table and water-bearing units. In situ soil and ground-water samples are collected during drilling to provide real time data, which is used to verify the existence and extent of subsurface contamination. Finally, monitoring well networks are installed to track migration of contaminant plumes. To meet this objective at an

aerially extensive site with complex geology, a versatile and efficient drilling technology is necessary.

Traditional drilling technologies used in remedial investigations include hollow stem auger, rotary, and cable-tool (or percussive) drilling. Typical sampling technologies combine the use of hollow stem auger and cable-tool drilling with split-spoon sampling devices. While these techniques have been applied successfully, drawbacks, including slow overall drilling time, excessive drilling-related waste, or poor quality samples, have plagued previous investigations. Rotasonic drilling has recently emerged as a technology that is more efficient, produces good quality, relatively undisturbed, continuous 5- to 10-foot core samples and can be used in both unconsolidated and most bedrock conditions.

A previous study compared the performance of several drilling methodologies during the drilling and installation of wells in a glacial till overlain by sand. Average drilling rates were 20 feet per day for cable-tool drilling, 18 feet per day for hollow stem auger drilling, and 160 feet per day for rotasonic drilling (1,2).

DRILLING TECHNOLOGY

Rotasonic drilling combines rotational and high frequency vibrational forces to advance the drill bit and drill pipe in the borehole. The primary design difference between rotasonic drilling and other types of rotary systems is the incorporation of an oscillator, located in the drill head, that produces vibrational energy. The vibrational frequency generated by the oscillator can be adjusted for different drilling conditions. Rapid drilling rates result from matching the vibrational frequency of the drill pipe, generated by the oscillator, with the resonant frequency of each 10-foot core barrel or drill pipe section. The resulting high amplitude waves within the core barrel or drill pipe are transmitted to the drill bit. This vibrational energy, combined with the rotational energy, allows effective operation in both unconsolidated and consolidated (or

bedrock) material. Rotasonic drilling can be conducted in both consolidated and most unconsolidated units at rates that equal or exceed other rotary techniques (1).

Basic equipment associated with a rotasonic drill rig includes the vibratory/oscillatory top-mounted drill head, mast, elevated drilling platform, motor, hydraulic pump and lines, hydraulic drill center, and the drill pipe and core barrels. A rack for holding drill pipe, core barrels and other drilling materials is either located on the drilling platform or on a second vehicle. Use of a second vehicle to hold drill pipe allows off-site decontamination of these materials without moving the drill rig itself. This second vehicle can also be equipped with a tank to store clean drilling water.

The rotasonic drill rig can be operated by one driller and a driller's assistant. The drill head is lowered down the mast to a working height above the drilling platform and is mechanically rotated from a vertical to a horizontal orientation. Hydraulically-operated, automated, mechanical wrenches and vises rapidly connect drill pipe or core barrel sections to the drill head. The drill head is then raised and rotated to a vertical orientation prior to drilling. Incorporation of the rotating drill head, automated wrenches and vises, and the elevated drilling platform results in a safe, clean, efficient drilling process.

The borehole is drilled by advancing two lines of drill pipe. Figure 1 illustrates the key steps in this process. A studded drill bit is attached to the base of the core barrel, which has a 4-inch inner diameter (ID) and 4.5-inch outer diameter (OD). (The core barrel is also available with a 6-inch ID and 6.5-inch OD.) The core barrel, usually 10 feet in length, is connected to the 4.5-inch OD inner drill pipe and is advanced to the desired depth using high frequency vibration and rotation, forcing a relatively undisturbed, continuous core into the core barrel. When the core barrel reaches the desired depth, a larger, outer drill pipe, 5.875-, 6.25-, or 8.25-inch OD, is advanced, again using rotation and vibration, along the outside of the core barrel, to the same depth. The larger drill pipe is left in place to hold open the borehole while the inner

drill pipe, core barrel, and sample are retrieved. This assembly is removed from the borehole and lowered towards the drilling platform. The core sample is extruded from the core barrel, using vibration or hydraulic pressure, into a plastic sleeve that has been fitted to the end of the core barrel. The core sample is completely contained in this sleeve. The core sample can be alternatively extruded onto a stainless steel tray. The core barrel is raised to a vertical position and is returned to the borehole. The process is then repeated, with the core barrel always driven ahead of the outer drill pipe to ensure representative sampling. Successive 4-inch diameter cores are laid end-to-end for lithologic description and sampling. In this manner, a complete lithologic core from ground surface to the desired depth can be readily obtained.

The core sampling procedure can be performed effectively without the addition of drilling fluids. Water is added during the advancement of the outer drill pipe, if needed, to flush out cuttings in the annular space between the inner and outer drill pipe or to flush out cuttings at the bottom of the borehole after the sample is retrieved. Excess water produced during these activities is collected in a container located beneath the drilling platform.

APPLICATIONS

Exploratory Borings

The high quality, continuous coring capability of rotasonic drilling makes this technology ideal for conducting exploratory borings to determine subsurface lithology. The rotasonic drilling technology allows rapid advancement through almost any type of geologic material. Shallow, water table borings as well as borings to bedrock can be conducted quickly and efficiently. The relatively undisturbed core samples provide an accurate depiction of the physical structure and lithology of the subsurface, including lithologic units, depth to bedrock, absolute and relative grain sizes, estimations of relative permeability, and estimations of degree of saturation. In addition, visual indications of contamination can be correlated to precise depths and geologic

units. This information can be used to determine depth to water table and to identify permeable and impermeable units. If desired, the cores can be logged and crated for long term storage.

Sampling

With rotasonic drilling, soil sampling, soil headspace analyses, and ground-water sampling can be easily incorporated into the overall drilling program. The real time feedback from such a program can be used to select additional well locations, select additional sampling intervals, and establish screened intervals in monitoring wells. All of these are essential to meeting the objectives of a remedial ground-water investigation. For example, analysis of soil and ground-water samples from an individual borehole can be used to establish the vertical extent of contamination. Analyses of samples from several well locations can be used to establish the horizontal or lateral extent of contamination and to delineate plumes.

Other drilling technologies do not always provide the same sampling capabilities. High quality soil samples are difficult to obtain using most traditional technologies when drilling in complex geologic terrains. Rotasonic drilling provides samples that are more representative of conditions at discrete depths than other drilling technologies. Headspace testing with other technologies, such as cable-tool and rotary drilling, that require the addition of fluids to the borehole during drilling, may not be representative of actual conditions.

Soil samples can be collected directly from the 4-inch-diameter rotasonic core samples. Volatile organic compound (VOC) samples should be collected from an undisturbed portion of the core immediately after the core is removed from the borehole. If the material in the core consists of consolidated sediments, a thin-walled sampler can be driven along the axis of the core to obtain an undisturbed sample for chemical analyses. In an unconsolidated core sample, a thin veneer of soil can be removed from the core surface to expose a relatively undisturbed VOC sampling interval. Samples for less sensitive analytical parameters, such as metals or total organic

carbon, can be collected from discrete intervals within the core or composited across different portions of the core, depending on the objectives of the investigation. Stainless steel or brass sleeves can also be inserted into the core barrel to obtain samples for off-site analysis. In some unconsolidated core samples, a thin-walled sampler can be used to provide samples for geotechnical analysis. The remainder of the core can be crated and stored to provide a physical record of the sample.

Headspace tests for VOCs and photoionizable compounds can be conducted using several techniques: bag headspace testing, field headspace testing, and field gas chromatography. Bag headspace testing is conducted immediately after the sample has been collected. Several small incisions are made in the plastic bag surrounding the sample, and a photoionization device (PID) is inserted to test for photoionizable compounds. This procedure is highly qualitative and does not identify potential contaminants, but can be used to trigger further sampling and analyses. Field headspace testing consists of collecting either grab or composite samples, depending on the objectives, and placing them in a glass container. The mouth of the container is covered with aluminum foil, and the lid is screwed on. The sample is allowed to equilibrate at a constant temperature for about 10 minutes. The lid is then removed, and the PID probe is inserted through the foil. Readings collected in this fashion are still qualitative in nature and do not provide identification, but can produce a record of the relative concentration of photoionizable compounds present. Again, these results can be used as a trigger for further chemical analyses. In the last technique, a sample is collected from the interval-of-interest immediately after the core is removed from the borehole. Subsequent analysis by field gas chromatography can aid in identifying and quantifying contaminants within the sample interval. The accuracy of the analyses depends on the analytical instrument used.

In situ ground-water sampling is possible using a rotasonic drill rig. Ground-water samples can be collected directly from the borehole using a variety of sampling techniques. The simplest technique is to remove the inner drill pipe from the borehole and leave the outer drill

pipe in place. Standing water in the borehole is purged, and the well is left to recover. The ground-water sample is then collected using equipment that satisfies the objectives of the sampling plan. This sample, however, would not necessarily be representative of a specific depth in the borehole because ground water may enter the outer drill pipe from various depths.

Figure 2 illustrates a procedure for collecting an in situ ground-water sample that is more representative of a specific sampling interval. The inner drill pipe and core barrel are advanced to the bottom of the desired sampling depth. The outer drill pipe is advanced to the same depth. The soil is removed using the core barrel, and the outer drill pipe is left in place. A temporary, slotted-screen, well point assembly is attached to the bottom of the inner drill pipe. A packer is attached to the well point assembly to isolate the sample interval. The well point is lowered to the sampling depth; the outer drill pipe is then pulled back to expose the screen causing the formation material to collapse around the well point. The inner drill pipe is unscrewed and removed from the borehole. A submersible pump is then lowered into the well point, and the sample interval is purged. The temporary well point can then be sampled using any sampling device small enough to fit inside the well point. After sampling, the well point assembly is removed, and drilling is resumed.

Well Installation

Monitoring wells are installed through the outer drill pipe. This drill pipe holds the borehole open and acts as a barrier to cross-contamination between hydraulic units. The well casing and screen are suspended in the center of the borehole while annular materials, such as filter pack, bentonite pellets, slurries, and grout, are poured down the annular space. Slurries and grouts are easily placed using pumps and tremie lines. The annular space between the outer drill pipe and a 2-inch diameter monitoring well is large enough to accommodate a 1- or 1.5-inch tremie line. During introduction of filter pack materials and bentonite pellets or chips, the drill pipe and well can be vibrated to lessen the potential for bridging. A small quantity of these

materials is added to the borehole. The outer drill pipe is then pulled up slowly, and the annular materials are allowed to settle. This process is repeated until the annular material reaches the required thickness. During the placement of the grout or slurry above the bentonite seal, the outer drill casing is slowly removed, allowing this material to completely fill the annular space. If necessary, the outer drill casing can be left in place to provide additional support or to seal off contaminated intervals. This process can be modified to install standard 2-inch and 4-inch diameter monitoring wells, flush-mounted wells, and piezometers.

CASE STUDY

A remedial investigation is underway at numerous locations throughout a large federal facility site in Ohio. Hazardous waste generated during past and current activities are suspected to have contaminated the environment in and around the facility. Little documentation exists concerning specific waste disposal practices or spill histories.

The site is underlain by glacial till and fluvial deposits that occupy an extensive buried valley system. Thick, interbedded sequences of clays, silts, sands, gravels and cobbles indicate diverse depositional environments. Confined aquifer systems have been identified in some areas, while other areas appear to consist of hydraulically connected, water-bearing units. Portions of the more permeable units form aquifers that provide municipal and private drinking water supplies. Previous investigations revealed contamination in-site soils and existing on-and off-site drinking water supply wells. Actual and potential contaminant sources were identified during earlier investigations; these areas were prioritized according to existing or potential threats to human health and the environment. Areas assigned the highest priorities are being investigated first.

Subsurface conditions must be characterized to determine the nature and extent of soil and ground-water contamination. Remedial investigation objectives associated with this goal

include identifying existing contamination, determining relative concentration ranges for these compounds, determining vertical and lateral extent of contamination in soils and ground water, identifying subsurface lithology, locating both permeable and impermeable geologic units, defining the water table surface, and determining local and regional ground-water flow patterns. The remedial investigation work plan requires drilling exploratory borings in potential source areas and installing a monitoring well network of single wells, well pairs, well clusters, and piezometers, to monitor contaminant migration. Well locations are scattered throughout the site and in adjacent areas. Drilling occurs on both facility and private property.

The initial remedial investigation was conducted using traditional drilling and sampling techniques. Cable-tool rigs were used to drill the deepest borehole at each well location. Continuous lithologic sampling was performed using 2- or 3-foot split-spoon samplers. Hollow stem auger rigs were then used to drill and install intermediate and shallow wells. In situ ground-water sampling was not performed. Progress in the investigation was impeded by the slow, labor-intensive cable-tool drilling process. In one instance, three weeks were required to drill and install one 200-foot bedrock monitoring well. Much of the delay can be attributed to the time needed to weld the drive casing sections together. Delays were also caused by operational shutdowns due to inclement weather. Hollow stem auger drilling proceeded more rapidly but was affected by the variable lithology throughout the study area. Drilling through formations containing large-sized fragments was difficult when using the hollow stem auger rig. Both methods often yielded poor quality samples. Collection of soil samples with a 2-inch diameter split-spoon sampler in formations containing larger sized fragments often resulted in poor recovery rates. Low recovery rates in some samples made accurate lithologic descriptions impossible. In addition, the 2-inch split-spoon sampler did not produce a sufficient volume of sample to fill all sample containers when a large suite of analytes was required. Often, a second sample was collected from the interval below the target interval to make up the deficit. For these reasons, the representativeness of some of the samples is questionable.

Another problem evolved while using these drilling techniques. The remedial investigation work plan stipulated that all site soils were considered hazardous until proven otherwise. All excavated soils and drilling-generated muds were treated as hazardous and were drummed and stored on site. Both cable-tool and hollow stem auger drilling operations produced large quantities of drummed wastes. Testing and disposing of the drummed materials added to the overall cost of the investigation.

In light of the problems experienced during the first investigation, rotasonic drilling was selected for the second investigation. This decision was based on the rotasonic drilling technology's reputation for (1) drilling rapidly through all types of material, (2) producing good quality, relatively undisturbed, continuous core samples, (3) obtaining in situ ground-water samples during drilling, and (4) producing less waste during drilling. Previous field tests of the rotasonic drilling technique conducted at the facility contributed to this decision. A 60-foot monitoring well was drilled and installed in less than 4 hours.

The area of interest for the second investigation is adjacent to an inactive municipal wellfield. The local geology consists of glacial till and fluvial deposits overlying bedrock. Well logs from the municipal wells and from existing monitoring wells suggested that more than one aquifer existed locally and that a monitoring well network should therefore be established to evaluate water quality at specific depths within each aquifer. A thick, impermeable unit within the till was expected to separate these aquifers. Several potential source areas had been defined during previous investigations. Primary contaminants of concern included chlorinated solvents, fuel-type VOCs, and metals. The objectives for this effort were identical to those for the entire facility. The work plan for this area included drilling shallow exploratory boreholes in suspected source areas, and drilling and installing a network of monitoring wells and piezometers. An in situ sampling and field screening analytical program was designed and implemented to take advantage of the capabilities associated with this drilling technology.

Rotasonic drilling and sampling were performed using a 4-inch ID core barrel and inner drill pipe and a 6-inch ID outer drill pipe. Borehole depths ranged from 20 feet to 285 feet below ground surface. Five-foot- and 10-foot-long, continuous core samples were collected from each borehole. Four-inch-diameter core samples were collected in plastic sleeves. A lithologic description of each core was generated as it was retrieved from the borehole. The nature of the glacial till material beneath the site did not hinder the drilling process. The only delays were caused by the time needed to complete the lithologic descriptions and to collect the appropriate samples. For example, at one location, the actual drilling time for three 5-foot cores in a shallow exploratory boring was less than 1 minute, but the associated lithologic evaluation and sampling required over an hour. The core samples were of much higher quality than those obtained using the split-spoon samplers. The recovery rate for most cores was 100 percent.

Detailed, accurate lithologic descriptions were generated for each borehole. These lithologic descriptions were used to construct geologic cross sections of the site. Both permeable and impermeable units were identified from these cross sections and the associated lithologic descriptions. The water table elevation in a borehole could be accurately identified from inspection of the core samples. An evaluation of this information early in the investigation suggested the presence of only one aquifer over a large portion of the site, rather than several aquifers, as had been expected. The drilling program was redesigned accordingly.

Soil samples were collected for both field and laboratory analysis of VOCs. Field and bag headspace analyses were conducted on soil collected at major lithologic breaks within each core and in areas of discoloration. The field headspace samples were stored as a physical record of the lithologic units in each borehole. Soil samples were also collected at lithologic breaks and at predetermined intervals for VOC analysis by portable field gas chromatograph and metals analysis by X-ray fluorescence. The work plan required that soil samples be collected at specified intervals for full-scale chemical analyses at an off-site analytical laboratory. One 4-inch core provided an adequate volume of sample to satisfy all the soil sampling requirements.

In situ ground-water samples were collected for field screening and off-site analyses at specified intervals using a temporary well point installed in the borehole. The field screening samples were analyzed for VOCs and metals in the field screening laboratory using gas chromatography and anode stripping voltammetry, respectively. Ground-water samples for off-site analyses were collected from the temporary well point using a teflon bailer.

Field screening results, combined with lithologic information from the core samples, were used to estimate the vertical extent of contamination in boreholes where contamination was encountered. This information was then used to install monitoring wells near the borehole and to determine the screened intervals in those wells. Because in situ ground-water samples were not collected during the first investigation, analytical information was not available until months after the sampling date and could not be used to make informed field decisions on well placement and screened interval determinations.

Rotasonic drilling during this investigation generated an average of one or two 55-gallon drums of solid waste per deep borehole. Shallow and intermediate wells produced proportionally lower quantities of drilling-generated solid waste. This was expected, since the addition of water or drilling fluids is not necessary during rotasonic core sampling. The inclusion of in situ ground-water sampling increased the amount of liquid drilling waste. Three purge volumes were pumped from each temporary well point prior to sampling. This purge water was containerized in 55-gallon drums and stored on site. The most significant reduction in drilling-generated waste occurred in boreholes where in situ ground-water sampling was not conducted.

Monitoring well and piezometer installation with the rotasonic drilling rig proceeded as planned. Stainless steel 2-inch diameter monitoring wells and piezometers were installed in all boreholes, except for the shallow exploratory boreholes in the source areas. The drillers had no difficulty placing the variety of annular materials specified in the work plan. Filter pack and

bentonite pellets were placed in shallow wells by pouring them into the annular space. All annular materials in deep wells were placed using a side-discharge tremie pipe or hose. Ground - water samples were later collected from these monitoring wells for off-site analyses.

SUMMARY

Rotasonic drilling proved to be a viable alternative drilling method for the remedial investigation at this facility. Drilling proceeded rapidly through the complex geology beneath the site. The high quality, continuous core samples collected from the boreholes yielded accurate lithologic and hydrologic information. Drilling-generated wastes were kept to a minimum. The in situ sampling capabilities provided valuable data for determining well placement and screened interval locations during the investigation. In all aspects, rotasonic drilling outperformed cable-tool and hollow stem auger drilling in achieving the objectives of this remedial investigation.

CONCLUSION

Rotasonic drilling is an alternative drilling technique for use in remedial investigations. Its rapid drilling capabilities allow a monitoring well network to be installed over a large area in a relatively short period of time. Geologic diversity does not delay or impair the progress of the investigation. The entire process is faster and more efficient than traditional drilling techniques. When combined with continuous core sampling, the technology yields high quality, relatively undisturbed cores. Rotasonic drilling provides the detailed, accurate information needed to meet the objectives of a subsurface investigation.

ACKNOWLEDGEMENT

The authors would like to acknowledge Tom Oothoudt, President of North Star Drilling, Inc. and John Dustman of Summit Enviro-Solutions, for their assistance in preparing this paper.

FIGURE 2

IN SITU GROUND-WATER SAMPLING DRILLING ROTASONIC DRILLING

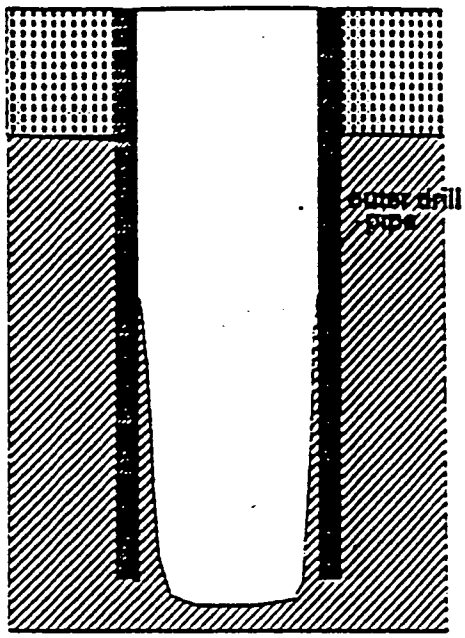

1. Drill to Base of Sample Interval and Remove Soil Sample

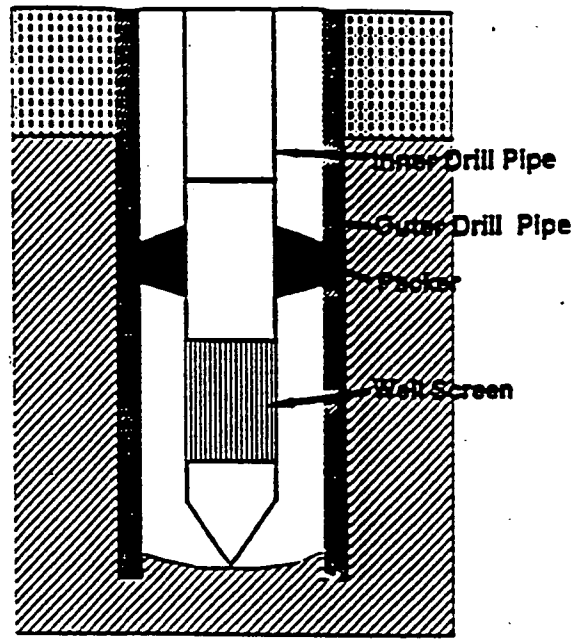

2. Place Well Point Assembly in Borehole

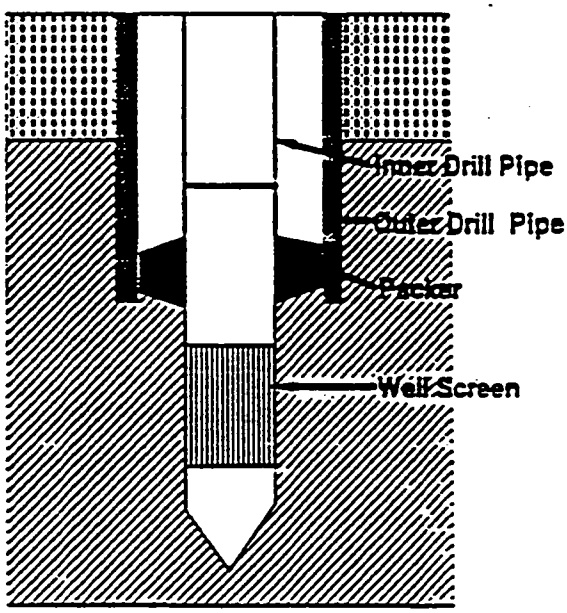

3. Pull Back Outer Drill Pipe to Expose Well Screen

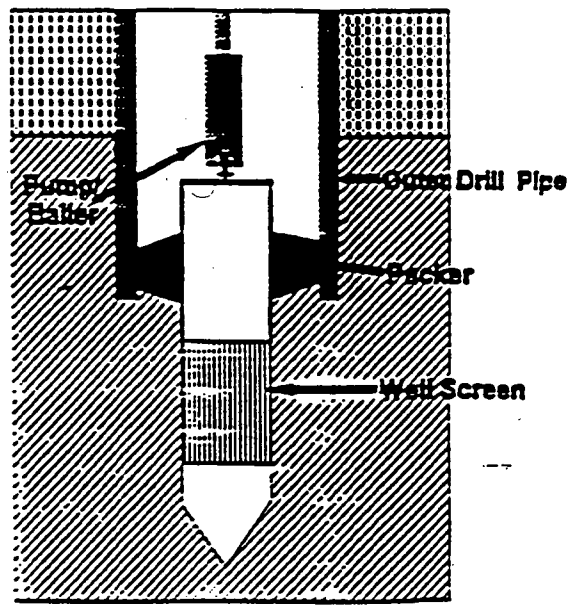

4. Remove Inner Drill Pipe. Lower Pump/Bailer into Well Point

LEGEND

- Open borehole
- Lithologic Unit 1
- Lithologic Unit 2

REFERENCES

(1) Davis, R. and Oothoudt, T., The Use if Rotasonic Drilling in Environmental Investigations, submitted for publication. (Used with permission of the authors.)

(2) Dustman, J., Davis, R. and Oothoudt, T., Soil, Bedrock and Groundwater Sampling Using Rotasonic Drilling Techniques. Proc. The Sixth National Outdoor Action Conference on Aquifer Restoration, Ground Water Monitoring, Geophysical Methods, pp.179-187, National Ground Water Association, Las Vegas, 1992.

ALLIANCE
ENVIRONMENTAL, INC.

January 18, 1993

Mr. Dean Shanklin
FERMCO
P.O. Box 398704
Cincinnati, OH 45239-8704

Re: Comparison between Sonic, Auger and
Cable Tool Drill Methods

Dear Mr. Shanklin:

During our meeting of 01/13/93 it was requested that a comparison of basic drill techniques and efficiency be offered to out line the advantages of the Rotasonic method against more conventional drill effort. Review of the stated Field Activity Policies of the Fernald Environmental Management Project's Quality Assurance Plan indicates the type of drilling method to be selected for a particular project at FEMP "depends on intended use of the borehole and samples collected. Ability to acquire data of sufficient quality for intended use and personnel health and safety are the primary factors considered when choosing a drilling method."

Since previous wells drilled at the FEMP were by the cable tool and hollow-stem auger methods, their types will be addressed in this comparison.

CABLE TOOL (Percussion)

Cable tool drilling is one of the oldest and most reliable methods of drilling. Old timers will tell you this method gives the driller the best "feel" for the strata he is penetrating. However, it is also the slowest method of drilling in use today. The equipment is mechanically simpler than most other drilling equipment, is of moderate size and is usually truck mounted.

Cable tool drilling is performed by raising and dropping a heavy bit suspended on a cable. By repeated impact of the bit at the bottom of the hole the various strata i.e. soil, rock, boulders are broken up, mixed with water and removed by a bailer. The tension of the cable during this type of drilling is an important function of cable tool drilling. This cable tension controls the total throw (bit rotation, impact velocity, penetration distance) of the bit which in turn controls drilling speed and straightness of the borehole.

Cutting samples for general use may be retrieved through use of the bailer. Discrete or undisturbed samples can be obtained at the bottom of the hole through several different types of drive samples.

117 INDUSTRY ROAD, MARIETTA, OHIO USA 45750 9355 TELEPHONE: 614/373-2190 TELEFAX: 614/374-5908

The cable tool method of drilling has several advantages over other drilling methods.

* In unconsolidated formations containing boulders or cobbles where air or mud rotary or auger methods are unable to achieve a successful hole, use of the cable tool rig can penetrate these obstructions;
* Acquiring environmentally acceptable samples is more easily accomplished with cable tool;
* The method can work in virtually all types of soil or rock;
* The method is conductive to monitor well installations, especially multi-cased wells;
* The equipment is readily available and relatively inexpensive to maintain and operate;
* Contamination containment i.e. (cuttings, dust, drill water) is minimized and more easily controlled;
* Most cable tool rigs offer good mobility;
* Larger boreholes can be advanced.

Some disadvantages of using this method are:

* Cable tool penetration rates are very slow compared to other methods. For example using air rotary or sonic methods a penetration rate of 300 ft. per day is not uncommon. With cable tool 20 feet per day is considered fast;
* Pull back ability is weak and additional equipment is often brought in to remove casing;
* Special sampling such as use of split spoons is slow and cumbersome;
* Casing must be use in unconsolidated formations;
* Considerable fluids must be used to permit bailing and hole clean-out.

HOLLOW STEM AUGERING

Use of the hollow stem auger method allows for a range of sampling techniques that can be initiated at virtually any depth without removal of the auger from the borehole. The auger flights act as a temporary casing while samples are taken or while monitoring equipment is emplaced.

The versatility of the hollow stem auger method is evidenced by the drilling of boreholes for sampling and monitoring well installations throughout the U.S. and the world. Advantages of the hollow stem auger system are:

* Rapid penetration rates in clays, silts, sands and even small gravel;
* Ease of obtaining samples;

(Hollow Stem Auger advantages continued)

* Conducive for monitoring well installation in medium to fine grained, unconsolidated sediments;
* Easily transported;
* Relatively low drilling cost compared to other drilling methods;
* Good variety of sampling types (i.e. hydropunch, pressure meters, etc.)

Some disadvantages of this method are:

* Limited depth of drilling, depths in excess of 120 feet are usually not attempted;
* During well installation, hollow stem augers are susceptible to saturated sands flowing (heaving) into the augers when the pilot bit is pulled, or sloughing of the hole wall as the augers are removed. The only corrective method involves use of water or mud to equalize the hole pressure;
* Containment of cuttings is another problem with the hollow stem auger method. A portion of the moist/saturated cuttings are conveyed to the surface by the auger during drilling and collect at the top of the borehole around the immediate outside of the auger potentially exposing the drilling and sampling crew to contaminated materials;
* Hollow stem augers are primarily restricted to drilling in the finer grained, unconsolidated sediments or finer gravels. This method becomes ineffective where gravel of cobble size or larger are encountered;
* Hollow stem augers tend to "smear" the borehole wall and can seal off or restrict the flow of potential aquifer zones.

SONIC

Sonic drilling differs substantially from the conventional drilling methods discussed previously. Sonic drills are about the same average size as other rigs and are usually truck or ATV mounted.

In sonic drilling there is neither a conventional drill bit nor normal drill rod. The drill bit, or what acts as a bit, consists of a relatively large diameter, thick walled, hardened steel tube or sleeve with tungsten carbide inserts set into the outside and bottom face (cutting side and end). This bit is attached to the bottom of the drill rod. The drill rod is also larger diameter. It is, therefore, similar to a hollow stem auger without the auger flights and longer (10 to 20′ sections). It is a fairly thick walled pipe that is threaded at each end.

Drilling is accomplished by means of a sonic head located on the drill mast. This sonic head produces and amplifier a harmonic frequency close to the natural frequency of the drill string allowing the string to act as a flywheel, transferring the entire energy of the drill string, in cyclic bursts, to the bit. The bit does not leave the cutting surface during drilling.

This method utilizes only limited pressure on the bit surface as the inertial moment of the induced vibrations and slow rotation is what effects penetration. Sampling with this drill method is accomplished with an inner sample barrel. The cuttings, as drilling proceeds, are pushed into the sample barrel which is positioned in relation to the bit with respect to the material being penetrated.

This drilling method was developed to obtain a sample of high integrity from variable lithologies including unconsolidated cobbles/boulders. Because the bit never leaves the surface of the material being drilled almost all of the sample is captured in the core barrel eliminating sample loss and cross contamination.

Rotasonic drilling performed from past environmental investigative work and monitoring well installation on similar sites to FEMP has been demonstrated to be far superior to conventional drilling methods for environmental work.

Some of the advantages in utilizing the Rotasonic method are:

* High rate of penetration (15' per hour in boulders);
* High sample integrity and effective for discrete sampling for lab analysis;
* Samples are less time consuming to collect and are of in-situ quality;
* Conventional sampling can be employed as attachments as needed (i.e. hydropunch, split spoons, shelby tubes, etc.);
* There is controlled/complete contaminant containment;
* Equipment is mobile;
* Method has no or limited fluid use;
* Method is more cost effective per ft than other drill types;
* Waste generation is drastically minimized;
* Because the samples are contained and controlled the method is safer to drill and investigative personnel;
* Sonic drills are capable of angle holes.

Some disadvantages can be:

* Depth, any significant damping effect impacted by the drilled media will inhibit the harmonic (vibration) of the drill string and eventually cause penetration to stop. This situation is normally not encountered until 300 or more feet of clay or rock is penetrated;
* More sophisticated maintenance required as well as higher level of operator training needed.

Consistent of FEMP policy of water minimization, use of minimal fluids, generation of the fewest possible cuttings, and ability to penetrate a wide variety of formations; we feel the rotasonic

method offers great possibilities at the Fernald site. The rotasonic is adaptable to use of standard sampling devices such as hydro-punch, split spoons, temporary wells, and other normal types as well as yielding a large diameter, continuous, undisturbed core. The method can be utilized in setting multi-cased wells. In short, we feel Rotasonic can accomplish the drilling mission at FEMP on a faster, less labor intensive, better quality, less waste generation method.

COST COMPARISON ROTASONIC vs CABLE TOOL

As requested we have attempted to develop a cost comparison between Cable Tool and Rotasonic drilling methods. We were given a typical boring log representing the strata to be penetrated at the FEMP site and will base our estimates on each drill method being utilized to accomplish this task. Since the depth was below the working range of the hollow stem auger type of drilling, we have not included this drill type.

Based on the data presented it required 15 days to drill and install a 4" well 138.5 feet deep by cable tool method. It is our estimate that using the Rotasonic method this would have been accomplished in a maximum of 1 week.

As you can see from this cost comparison while the cost to perform the well is basically the same for the Rotasonic vs the Cable Tool methods, the Rotasonic method produces some decided cost savings.

1) Drill time is cut to 1/3 the Cable Tool time. This saves living expense, geologist and supervising time and information turn around.
2) Minimal waste is generated in the Rotasonic method and is confined to the small amount of fluid added to lubricate between the sampler and the casing when drilling above the water table and drums for clothing and safety equipment disposal. The lack of cuttings and drill fluids provided by the Rotasonic method can result in the savings of hundreds of drums and their related disposal costs over the life of the project.
3) Sampling is easier, less time consuming, more representative of the profile penetrated and safer to handle. The lack of cuttings and fluid do not expose the drill crew to contaminants.

It is our opinion that the Rotasonic Drill method best meets FEMP's Field Activity Policy.

Very truly yours,

Alliance Environmental, Inc.

Charles Ray Clough, CET, MGWC

CRC/clb

000211

TASK	UNITS	CABLE TOOL UNIT COST	CABLE TOOL TOTAL	ROTASONIC UNIT COST	ROTASONIC TOTAL
Mob/Demob	1	2,500	2,500	2,500	2,500
Drive 10" Casing	138.5	35	4,847.50	100	13,850
Split Spoon Sampling	46	50	2,300	n/a	n/a
Shelby Tube	1	100	100	n/a	n/a
Tool Cost	138.5	- 0 -	- 0 -	20	2,770
Drill Crew Per Diem	30/man/ days	60/per man/ per day	1,800	- 0 -	- 0 -
	15/man/ days	60/per man/ per day		60/per man/ per day	900
Water Truck	15 days	75/day	1,125	- 0 -	- 0 -
	5 days			75/day	375
Grout Mixer	15 days	75/day	1,125	- 0 -	- 0 -
	5 days	- 0 -	- 0 -	75/day	375
Steam Cleaner	15 days	50/day	750		
	5 days	- 0 -	- 0 -	50/day	250
Welder	15 days	25/day	375	- 0 -	- 0 -
Casing Jacks	15 days	50/day	750	- 0 -	- 0 -
Standby Time Steam/Decon	4 hours	100/hr.	400	100/hour	400
Pull 10" & Install 4" Well	10 hours	100/hr.	1,000		
Install Cover	2 hours	100/hr.	200		
Develop	4 hours	100/hr.	400		
Misc.	10 hours	100/hr.	1,000		
<u>Materials</u>					
Use of 10" Drive Casing	140 feet	10/ft.	1,400		
Use of 10" Drive Shoe	1	100/ea.	100		
4" Screen (316 SS)	10 feet	75/ft.	750	75	750
4" 316 Riser	140	48/ft.	6,720	48	6,720
Cap & Plug	1	150	150	150	150
50# Sand	25 bags	6.50/bag	162.50	6.50	162.50
Volclay	20	30	600	30	600
Sacrete	6	10	60	10	60
10" Protective Cover	1	150	150	150	150
Master Lock	1	12	12	12	12
55 Gal. DOT Drums	14	50	700		
	2			50	100
Misc.	Lot	500	500	500	500

TOTAL COSTS TO DRILL, SAMPLE, FURNISH & INSTALL 4" 316 STAINLESS STEEL WELL ---------- $ 29,977.00----- $ 30,624.50

ATTACHMENT VIII

ASTMS

Designation: C 109 – 92

Standard Test Method for Compressive Strength of Hydraulic Cement Mortars (Using 2-in. or 50-mm Cube Specimens)[1]

This standard is issued under the fixed designation C 109; the number immediately following the designation indicates the year of original adoption or, in the case of revision, the year of last revision. A number in parentheses indicates the year of last reapproval. A superscript epsilon (ε) indicates an editorial change since the last revision or reapproval.

This test method has been approved for use by agencies of the Department of Defense. Consult the DoD Index of Specifications and Standards for the specific year of issue which has been adopted by the Department of Defense.

1. Scope

1.1 This test method covers determination of the compressive strength of hydraulic cement mortars, using 2-in. or 50-mm cube specimens.

NOTE 1—Test Method C 349 provides an alternative procedure for this determination (not to be used for acceptance tests).

1.2 The values stated in inch-pound units are to be regarded as the standard. The values in parentheses are for information only.

1.3 *This standard does not purport to address all of the safety problems, if any, associated with its use. It is the responsibility of the user of this standard to establish appropriate safety and health practices and determine the applicability of regulatory limitations prior to use.*

2. Referenced Documents

2.1 *ASTM Standards:*

C 230 Specification for Flow Table for Use in Tests of Hydraulic Cement[2]

C 305 Practice for Mechanical Mixing of Hydraulic Cement Pastes and Mortars of Plastic Consistency[3]

C 349 Test Method for Compressive Strength of Hydraulic Cement Mortars (Using Portions of Prisms Broken in Flexure)[3]

C 511 Specification for Moist Cabinets, Moist Rooms and Water Storage Tanks Used in the Testing of Hydraulic Cements and Concretes[2]

C 670 Practice for Preparing Precision and Bias Statements for Test Methods for Construction Materials[4]

C 778 Specification for Standard Sand[3]

C 1005 Specification for Weights and Weighing Devices for Use in Physical Testing of Hydraulic Cements[3]

3. Summary of Test Method

3.1 The mortar used consists of 1 part cement and 2.75 parts of sand proportioned by weighing. Portland or air-entraining portland cements are mixed at specified water-cement ratios. Water content for other cements is that sufficient to obtain a flow of 110 ± 5 in 25 drops of the flow table. Two-inch or 50-mm test cubes are compacted by tamping in two layers. The cubes are cured one day in the molds and stripped and immersed in lime water until tested.

4. Significance and Use

4.1 This test method provides a means of determining the compressive strength of hydraulic cement and other mortars and results may be used to determine compliance with specifications. Further, this test method is referenced by numerous other specifications and test methods. Caution must be exercised in using the results of this test method to predict the strength of concretes.

5. Apparatus

5.1 *Weights and Weighing Devices*, shall conform to the requirements of Specification C 1005. The weighing device shall be evaluated for precision and bias at a total load of 2000 g.

5.2 *Glass Graduates*, of suitable capacities (preferably large enough to measure the mixing water in a single operation) to deliver the indicated volume of 68°F (20°C). The permissible variation shall be ±2 mL. These graduates shall be subdivided to at least 5 mL, except that the graduation lines may be omitted for the lowest 10 mL for a 250-mL graduate and for the lowest 25 mL of a 500-mL graduate. The main graduation lines shall be circles and shall be numbered. The least graduations shall extend at least one seventh of the way around, and intermediate graduations shall extend at least one fifth of the way around.

5.3 *Specimen Molds*, for the 2-in. or 50-mm cube specimens shall be tight fitting. The molds shall have not more than three cube compartments and shall be separable into not more than two parts. The parts of the molds when assembled shall be positively held together. The molds shall be made of hard metal not attacked by the cement mortar. For new molds the Rockwell hardness number of the metal shall be not less than 55 HRB. The sides of the molds shall be sufficiently rigid to prevent spreading or warping. The interior faces of the molds shall be plane surfaces with a permissible variation of 0.001 in. (0.025 mm) for new molds and 0.002 in. (0.05 mm) for molds in use. The distances between opposite faces shall be 2 ± 0.005 in. or 50 ± 0.13 mm for new molds, and 2 ± 0.02 in. or 50 ± 0.50 mm for molds in use. The height of the molds, measured separately for each cube compartment, shall be 2 in. or 50 mm with permissible variations of +0.01 in. (0.25 mm) and −0.005 in. (0.13 mm) for new molds, and +0.01 in. and −0.015 in.

---

[1] This test method is under the jurisdiction of ASTM Committee C-1 on Cement and is the direct responsibility of Subcommittee C01.27 on Strength.

Current edition approved April 15, 1992. Published June 1992. Originally published as C 109 – 34 T. Last previous edition C 109 – 90.

[2] *Annual Book of ASTM Standards*, Vols 04.01 and 04.02.

[3] *Annual Book of ASTM Standards*, Vol 04.01.

[4] *Annual Book of ASTM Standards*, Vols 04.01, 04.02, 04.04, and 04.08.

).38 mm) for molds in use. The angle between adjacent ıterior faces, and between interior faces and top and bottom ·lanes of the mold, shall be 90 ± 0.5° measured at points ;ightly removed from the intersection of the faces.

5.4 *Mixer, Bowl and Paddle*, an electrically driven me-hanical mixer of the type equipped with paddle and mixing owl, as specified in the Apparatus Section of Practice C 305.

5.5 *Flow Table and Flow Mold*, conforming to the re-uirements of Specification C 230.

5.6 *Tamper*, a nonabsorptive, nonabrasive, nonbrittle ma-:rial such as a rubber compound having a Shore A urometer hardness of 80 ± 10 or seasoned oak wood :ndered nonabsorptive by immersion for 15 min in paraffin : approximately 392°F (200°C), and shall have a cross :ction of ½ by 1 in. (13 by 25 mm) and a convenient length f about 5 to 6 in. (120 to 150 mm). The tamping face shall : flat and at right angles to the length of the tamper.

5.7 *Trowel*, having a steel blade 4 to 6 in. (100 to 150 mm) ı length, with straight edges.

5.8 *Moist Cabinet or Room*, conforming to the require-ıents of Specification C 511.

5.9 *Testing Machine*, either the hydraulic or the screw :pe, with sufficient opening between the upper bearing ırface and the lower bearing surface of the machine to :rmit the use of verifying apparatus. The load applied to the :st specimen shall be indicated with an accuracy of ±1.0 %. he upper bearing shall be a spherically seated, hardened ıetal block firmly attached at the center of the upper head of ıe machine. The center of the sphere shall lie at the center : the surface of the block in contact with the specimen. The ıock shall be closely held in its spherical seat, but shall be ee to tilt in any direction. The diagonal or diameter (Note ı of the bearing surface shall be only slightly greater than the :agonal of the face of the 2-in. or 50-mm cube in order to :cilitate accurate centering of the specimen. A hardened ıetal bearing block shall be used beneath the specimen to ıinimize wear of the lower platen of the machine. The :aring block surfaces intended for contact with the spec-nen shall have a Rockwell hardness number not less than) HRC. These surfaces shall not depart from plane surfaces y more than 0.0005 in. (0.013 mm) when the blocks are :w and shall be maintained within a permissible variation : 0.001 in. (0.025 mm).

NOTE 2—A diameter of 3⅛ in. (79.4 mm), which is large enough for sting 3 by 6-in. (75 by 150-mm) cylinders, is satisfactory, provided that e lower bearing block has a diameter slightly greater than the diagonal the face of the 2-in. or 50-mm cube but not more than 2.9 in. (74 m), and is centered with respect to the upper bearing block and held in ›sition by suitable means.

Materials

6.1 *Graded Standard Sand:*

6.1.1 The sand (Note 3) used for making test specimens ıall be natural silica sand conforming to the requirements ır graded standard sand in Specification C 778.

NOTE 3—*Segregation of Graded Sand*—The graded standard sand ould be handled in such a manner as to prevent segregation, since ·riations in the grading of the sand cause variations in the consistency the mortar. In emptying bins or sacks, care should be exercised to event the formation of mounds of sand or craters in the sand, down e slopes of which the coarser particles will roll. Bins should be of fficient size to permit these precautions. Devices for drawing the sand from bins by gravity should not be used.

7. Temperature and Humidity

7.1 *Temperature*—The temperature of the air in the vicinity of the mixing slab, the dry materials, molds, base plates, and mixing bowl, shall be maintained between 68 and 81.5°F (20 and 27.5°C). The temperature of the mixing water, moist closet or moist room, and water in the storage tank shall be set at 73.4°F (23°C) and shall not vary from this temperature by more than ±3°F (1.7°C).

7.2 *Humidity*—The relative humidity of the laboratory shall be not less than 50 %. The moist closet or moist room shall conform to the requirements of Specification C 511.

8. Test Specimens

8.1 Three or more specimens shall be made for each period of test specified.

9. Preparation of Specimen Molds

9.1 Apply a thin coating of release agent to the interior faces of the mold and non-absorptive base plates. Apply oils and greases using an impregnated cloth or other suitable means. Wipe the mold faces and the base plate with a cloth as necessary to remove any excess release agent and to achieve a thin, even coating on the interior surfaces. When using an aerosol lubricant, spray the release agent directly onto the mold faces and base plate from a distance of 6 to 8 in. (150 to 200 mm) to achieve complete coverage. After spraying, wipe the surface with a cloth as necessary to remove any excess aerosol lubricant. The residue coating should be just sufficient to allow a distinct finger print to remain following light finger pressure (Note 4).

9.2 Seal the surfaces where the halves of the mold join by applying a coating of light cup grease such as petrolatum. The amount should be sufficient to extrude slightly when the two halves are tightened together. Remove any excess grease with a cloth.

9.3 After placing the mold on its base plate (and at-taching, if clamp-type) carefully remove with a dry cloth any excess oil or grease from the surface of the mold and the base plate to which watertight sealant is to be applied. As a sealant, use paraffin, microcrystalline wax, or a mixture of three parts paraffin to five parts rosin by mass. Liquify the sealant by heating between 230 and 248°F (110 and 120°C). Effect a watertight seal by applying the liquefied sealant at the outside contact lines between the mold and its base plate.

NOTE 4—Because aerosol lubricants evaporate, molds should be checked for a sufficient coating of lubricant immediately prior to use. If an extended period of time has elapsed since treatment, retreatment may be necessary.

NOTE 5—*Watertight Molds*—The mixture of paraffin and rosin specified for sealing the joints between molds and base plates may be found difficult to remove when molds are being cleaned. Use of straight paraffin is permissible if a watertight joint is secured, but due to the low strength of paraffin it should be used only when the mold is not held to the base plate by the paraffin alone. A watertight joint may be secured with paraffin alone by slightly warming the mold and base plate before brushing the joint. Molds so treated should be allowed to return to the specified temperature before use.

10. Procedure

10.1 *Composition of Mortars:*

10.1.1 The proportions of materials for the standard

rtar shall be one part of cement to 2.75 parts of graded ndard sand by weight. Use a water-cement ratio of 0.485 for all portland cements and 0.460 for all air-entraining portland cements. The amount of mixing water for other than portland and air-entraining portland cements shall be such as to produce a flow of 110 ± 5 as determined in accordance with 10.3 and shall be expressed as weight percent of cement.

10.1.2 The quantities of materials to be mixed at one time in the batch of mortar for making six and nine test specimens shall be as follows:

	Number of Specimens	
	6	9
Cement, g	500	740
Sand, g	1375	2035
Water, mL		
Portland (0.485)	242	359
Air-entraining portland (0.460)	230	340
Other (to flow of 110 ± 5)	...	...

10.2 *Preparation of Mortar:*

10.2.1 Mechanically mix in accordance with the procedure given in Practice C 305.

10.3 *Determination of Flow:*

10.3.1 Carefully wipe the flow-table top clean and dry, and place the flow mold at the center. Place a layer of mortar about 1 in. (25 mm) in thickness in the mold and tamp 20 times with the tamper. The tamping pressure shall be just sufficient to ensure uniform filling of the mold. Then fill the old with mortar and tamp as specified for the first layer. t off the mortar to a plane surface, flush with the top of the mold, by drawing the straight edge of a trowel (held nearly perpendicular to the mold) with a sawing motion across the top of the mold. Wipe the table top clean and dry, being especially careful to remove any water from around the edge of the flow mold. Lift the mold away from the mortar 1 min after completing the mixing operation. Immediately, drop the table through a height of ½ in. (13 mm) 25 times in 15 s. Determine the flow by measuring the diameter of the mortar mass at four equispaced intervals. Average the increase and express as a percentage of the original base diameter.

10.3.2 For portland and air-entraining portland cements, merely record the flow.

10.3.3 In the case of cements other than portland or air-entraining portland cements, make trial mortars with varying percentages of water until the specified flow is obtained. Make each trial with fresh mortar.

10.4 *Molding Test Specimens:*

10.4.1 Immediately following completion of the flow test, return the mortar from the flow table to the mixing bowl. Quickly scrape down into the batch the mortar that may have collected on the side of the bowl and then remix the entire batch 15 s at medium speed. Upon completion of mixing, the mixing paddle shall be shaken to remove excess mortar into the mixing bowl.

10.4.2 When a duplicate batch is to be made immediately additional specimens, the flow test may be omitted and e mortar allowed to stand in the mixing bowl 90 s without covering. During the last 15 s of this interval, quickly scrape down into the batch the mortar that may have collected on the side of the bowl. Then remix for 15 s at medium speed.

10.4.3 Start molding the specimens within a total elapsed time of not more than 2 min and 30 s after completion of the original mixing of the mortar batch. Place a layer of mortar about 1 in. (25 mm) (approximately one half of the depth of the mold) in all of the cube compartments. Tamp the mortar in each cube compartment (5.9) 32 times in about 10 s in 4 rounds, each round to be at right angles to the other and consisting of eight adjoining strokes over the surface of the specimen, as illustrated in Fig. 1. The tamping pressure shall be just sufficient to ensure uniform filling of the molds. The 4 rounds of tamping (32 strokes) of the mortar shall be completed in one cube before going to the next. When the tamping of the first layer in all of the cube compartments is completed, fill the compartments with the remaining mortar and then tamp as specified for the first layer. During tamping of the second layer bring in the mortar forced out onto the tops of the molds after each round of tamping by means of the gloved fingers and the tamper upon completion of each round and before starting the next round of tamping. On completion of the tamping, the tops of all cubes should extend slightly above the tops of the molds. Bring in the mortar that has been forced out onto the tops of the molds with a trowel and smooth off the cubes by drawing the flat side of the trowel (with the leading edge slightly raised) once across the top of each cube at right angles to the length of the mold. Then, for the purpose of leveling the mortar and making the mortar that protrudes above the top of the mold of more uniform thickness, draw the flat side of the trowel (with the leading edge slightly raised) lightly once along the length of the mold. Cut off the mortar to a plane surface flush with the top of the mold by drawing the straight edge of the trowel (held nearly perpendicular to the mold) with a sawing motion over the length of the mold.

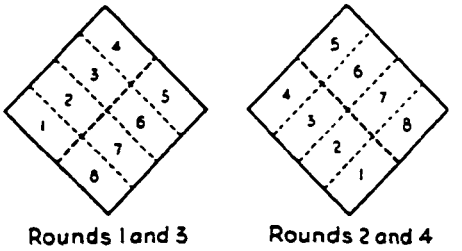

FIG. 1 Order of Tamping in Molding of Test Specimens

10.5 *Storage of Test Specimens*—Immediately upon completion of molding, place the test specimens in the moist closet or moist room. Keep all test specimens, immediately after molding, in the molds on the base plates in the moist closet or moist room from 20 to 24 h with their upper surfaces exposed to the moist air but protected from dripping water. If the specimens are removed from the molds before 24 h, keep them on the shelves of the moist closet or moist room until they are 24-h old, and then immerse the specimens, except those for the 24-h test, in saturated lime water in storage tanks constructed of noncorroding materials. Keep the storage water clean by changing as required.

10.6 *Determination of Compressive Strength:*

10.6.1 Test the specimens immediately after their removal from the moist closet in the case of 24-h specimens, and from storage water in the case of all other specimens. All test specimens for a given test age shall be broken within the

permissible tolerance prescribed as follows:

Test Age	Permissible Tolerance
24 h	±½ h
3 days	±1 h
7 days	±3 h
28 days	±12 h

If more than one specimen at a time is removed from the moist closet for the 24-h tests, keep these specimens covered with a damp cloth until time of testing. If more than one specimen at a time is removed from the storage water for testing, keep these specimens in water at a temperature of 73.4 ± 3°F (23 ± 1.7°C) and of sufficient depth to completely immerse each specimen until time of testing.

10.6.2 Wipe each specimen to a surface-dry condition, and remove any loose sand grains or incrustations from the faces that will be in contact with the bearing blocks of the testing machine. Check these faces by applying a straightedge (Note 6). If there is appreciable curvature, grind the face or faces to plane surfaces or discard the specimen. A periodic check of the cross-sectional area of the specimens should be made.

NOTE 6—*Specimen Faces*—Results much lower than the true strength will be obtained by loading faces of the cube specimen that are not truly plane surfaces. Therefore, it is essential that specimen molds be kept scrupulously clean, as otherwise, large irregularities in the surfaces will occur. Instruments for cleaning molds should always be softer than the metal in the molds to prevent wear. In case grinding specimen faces is necessary, it can be accomplished best by rubbing the specimen on a sheet of fine emery paper or cloth glued to a plane surface, using only a moderate pressure. Such grinding is tedious for more than a few thousandths of an inch (hundredths of a millimetre); where more than this is found necessary, it is recommended that the specimen be discarded.

10.6.3 Apply the load to specimen faces that were in contact with the true plane surfaces of the mold. Carefully place the specimen in the testing machine below the center of the upper bearing block. Prior to the testing of each cube, it shall be ascertained that the sperically seated block is free to tilt. Use no cushioning or bedding materials. An initial loading up to one half of the expected maximum loads for specimens having expected maximum loads of more than 3000 lbf (13.3 kN) may be applied at any convenient rate. Apply no initial loading to specimens having expected maximum loads of less than 3000 lbf (13.3 kN). Adjust the rate of load application so that the remainder of the load (or the entire load in the case of expected maximum loads of less than 3000 lbf (13.3 kN)) is applied, without interruption, to failure at such a rate that the maximum load will be reached in not less than 20 nor more than 80 s from start of loading. Make no adjustment in the controls of the testing machine while a specimen is yielding before failure.

NOTE 7—It is advisable to apply only a very light coating of a good quality, light mineral oil to the spherical seat of the upper platen.

11. Calculation

11.1 Record the total maximum load indicated by the testing machine, and calculate the compressive strength in pounds per square inch (or pascals). If the cross-sectional area of a specimen varies more than 1.5 % from the nominal, use the actual area for the calculation of the compressive strength. The compressive strength of all acceptable test specimens (see Section 12) made from the same sample and tested at the same period shall be averaged and reported to the nearest 10 psi (70 kPa).

TABLE 2 Precision

	Test Age, Days	Coefficient of Variation 1S %[A]	Acceptable Range of Test Results D2S %[A]
Portland Cements			
Constant water-cement ratio:			
Single-lab	3	4.0	11.3
	7	3.6	10.2
Av		3.8	10.7
Multi-lab	3	6.8	19.2
	7	6.4	18.1
Av		6.6	18.7
Blended Cements			
Constant flow mortar:			
Single-lab	3	4.0	11.3
	7	3.8	10.7
	28	3.4	9.6
Av		3.8	10.7
Multi-lab	3	7.8	22.1
	7	7.6	21.5
	28	7.4	20.9
Av		7.6	21.5
Masonry Cements			
Constant flow mortar:			
Single-lab	7	7.9	22.3
	28	7.5	21.2
Av		7.7	21.8
Multi-lab	7	11.8	33.4
	28	12.0	33.9
Av		11.9	33.7

[A] These numbers represent, respectively, the (1s %) and (d2s %) limits as described in Practice C 670.

12. Faulty Specimens and Retests

12.1 In determining the compressive strength, do not consider specimens that are manifestly faulty, or that give strengths differing by more than 10 % from the average value of all test specimens made from the same sample and tested at the same period (Note 8). After discarding specimens or strength values, if less than two strength values are left for determining the compressive strength at any given period, make a retest.

NOTE 8—Reliable strength results depend upon careful observance of all of the specified requirements and procedures. Erratic results at a given test period indicate that some of the requirements and procedures have not been carefully observed; for example, those covering the testing of the specimens as prescribed in 10.6.2 and 10.6.3. Improper centering of specimens resulting in oblique fractures or lateral movement of one of the heads of the testing machine during loading will cause lower strength results.

13. Precision and Bias

13.1 The precision statements for this test method are listed in Table 2 and are based on results from the Cement and Concrete Reference Laboratory Reference Sample Program. They are developed from data where a test result is the average of compressive strength tests of three cubes molded

nder the same conditions as shall be used for the final ignition of a residue and cooling in a desiccator for the same period of time used for the crucible containing the residue.

4.3 *Constancy of Weight of Ignited Residue*—To definitely establish the constancy of weight of the ignited residue, the residue and container shall be ignited at the specified temperature and time, cooled to room temperature in a desiccator, and weighed. The residue and container shall then be reheated for at least 30 min at the same temperature, cooled in a desiccator for the same period of time and reweighed. Additional ignition periods may be required until two consecutive weights do not differ by more than 0.2 mg, at which time it shall be considered that constant weight has been attained. For ignition loss, each reheating period shall be 5 min.

4.4 *Calculation:*

4.4.1 The calculations included in the individual procedures sometimes assume that the exact weight specified has been used. Accurately weighed samples which are approximately but not exactly equal to the weight specified may be used provided appropriate corrections are made in the calculation. Unless otherwise stated, weights of all samples and residues should be recorded to the nearest 0.0001 g.

4.4.2 In all mathematical operations on a set of observed values, the equivalent of two more places of figures than in the single observed values shall be retained. For example, if observed values are read or determined to the nearest 0.1 mg, carry numbers to the nearest 0.001 mg in calculation.

4.5 *Rounding Figures*—Rounding of figures to the nearest significant place required in the report should be done after the calculations are completed, in order to keep the final results free from calculation errors. The rounding procedure should follow the principle outlined in Practice E 29.

5. Residue and Sieve Analysis

5.1 *Significance and Use:*

5.1.1 This test method determines the residue obtained from slaking quicklime. Residue, in this case, is largely unreacted material such as uncalcined limestone or dolomite, overburned quicklime, or gross impurities, or a combination of these.

5.2 *Apparatus:*

5.2.1 The sieves used shall conform to the requirements of Specification E 11.

5.3 *Residue of Quicklime:*

5.3.1 Select a representative 2.5-kg (5-lb) sample of the quicklime. Break lime selected for this test so as to entirely pass a 25.0-mm (1-in.) square mesh screen. Test the pulverized lime as received. Place the sample in a box of wood or of some material of similarly low thermal conductivity, and an experienced operator should slake it with sufficient water at 21 to 27°C (70 to 80°F) to produce the maximum quantity of lime putty, carefully avoiding "burning" or "drowning" the lime. Allow it to stand for 1 h and then wash through an 850-µm (No. 20) sieve by a stream of water having a moderate pressure. Do not rub any material through the sieve. Continue the washing until the residue on the screen appears to consist entirely of coarse particles, but in no case continue the washing for more than 30 min. Dry the residue to constant weight at a temperature of 100 to 107°C (212 to 225°F) and calculate the percentage residue, based on the original weight of the sample.

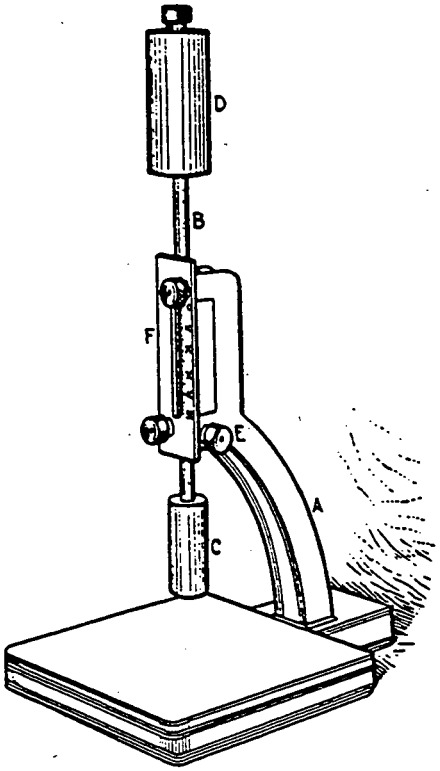

FIG. 1 Modified Vicat Apparatus

5.4 *Sieve Analysis of Hydrated Lime:*

5.4.1 Select a 100-g sample of the hydrated lime as received and place on a 600-µm (No. 30) sieve, which is nested above a 75-µm (No. 200) sieve. Wash the material through the sieves by means of a stream of water from a faucet. Use a piece of rubber tubing attached to the water faucet for the washing. The velocity of the water may be increased by pinching the tubing, but shall not be sufficient to cause any splashing of the sample over the sides of the sieve. Continue the washing until the water coming through the sieve is clear, but in no case continue the washing for more than 30 min. Take care not to let water accumulate on the 75-µm (No. 200) sieve, because the openings will become clogged and the operation cannot be completed in 30 min. Dry the residues on both sieves to constant weight in an atmosphere free from carbon dioxide at a temperature between 100 and 120°C (212 and 248°F).

5.4.2 Calculate the percentage residue retained on each sieve, based on the original weight of the sample. The weight of the material retained on the 600-µm (No. 30) sieve shall be added to the weight of the material retained on the 75-µm sieve to obtain the correct weight of the material retained on the 75-µm sieve.

5.5 *Sieve Analysis of Limestone and Dry Quicklime:*

5.5.1 Select the desired sieves and nest them with the coarsest sieves on top. Weigh a 100-g sample of the material to be tested and place it on the top sieve. Conduct the sieving operation by means of a lateral and vertical motion of the sieve accompanied by a jarring action to keep the sample moving continuously over the surface of the sieve. Continue sieving until not more than 1 % of the residue passes any sieve during 1 min. If mechanical sieving is used, the device

ıall be such as to impart the type of agitation described in :e hand sieving operation. Continue the shaking for a :riod of 15 min.

5.5.2 Weigh the residue retained on each sieve to the :arest 0.1 g. Report the results of the sieve analysis as ·llows: (*a*) total percentages passing each sieve, (*b*) total :rcentages retained on each sieve, or (*c*) percentages re-:ined between consecutive sieves, depending upon the form ; the specification for the use of the material under test.

5.6 *Precision and Bias:*

5.6.1 No precision data are available due to the limited se of these test methods. Therefore, users are advised to :velop their own laboratory precision. No statement is :ing made about the bias of these test methods.

. Standard Consistency of Lime Putty

6.1 *Significance and Use:*

6.1.1 In order to measure certain physical properties of a me putty, such as plasticity, it is necessary to have a niform or standard consistency (viscosity), since the prop-ty measurement is affected by the consistency level.

6.2 *Apparatus:*

6.2.1 *Modified Vicat Apparatus*—The apparatus, con-ructed as shown in Fig. 1, shall consist of a bracket, *A*, :aring a movable brass rod, *B*, 6.3 mm in diameter and of ıitable length to fit the Vicat bracket. A plunger, *C*, 12.5 ım in diameter, made of aluminum tubing, shall be tached to the lower end of the rod. The total weight of the ɔd with plunger shall be 30 g. The lower end of the plunger ıall be closed without shoulders or curvature and the tube ıay be loaded with shot to the specified weight. The total eight required may also be obtained by means of a weight, , screwed into the rod. The rod can be held in any position y means of a screw, *E*, and has a mark midway between the ıds which moves under a scale, *F*, graduated in millimetres, :tached to the bracket, *A*.

6.2.2 *Mold*—The conical ring mold shall be made of a oncorroding, nonabsorbent material, and shall have an ıside diameter of 70 mm at the base and 60 mm at the top, nd a height of 40 mm.

6.2.3 *Base Plate*—The base plate for supporting the ring ıold shall be of plate glass and about 100 mm square.

6.2.4 *Mechanical Mixers.*[6]

6.3 *Standard Consistency Determination:*

6.3.1 *Mechanical Mixing Procedure Using the Vac-U-fixer*—To a measured amount of water contained in an 00-cm³ Vac-U-Mix bowl, add 300 g of hydrated lime and and mix for 10 s with a stiff spatula (Note 2). Cover putty to revent evaporation of water. After the applicable soaking eriod, 30 min maximum for Type S, special hydrated lime, nd not less than 16 h nor more than 24 h for Type N, ormal hydrated lime, insert the paddle assembly and mix ıe putty for 30 s with the mechanical mixer. Remove the addle assembly and scrape down any putty adhering to it nd to the sides of the mixing bowl. Remix for 30 s and etermine the consistency as prescribed in 6.3. If the enetration is less than 15 mm, return all of the material to the mixer bowl, add additional water, and remix for 15 s. If the penetration is greater than 25 mm, repeat the test.

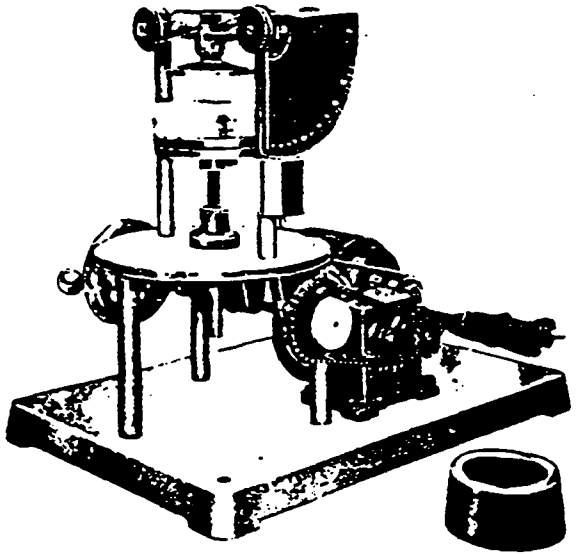

Constants of the Machine:

Absorption of Porcelain Base Plate—minimum of 40 g in 24 h. For rate of absorption of base plates see 14.3.2.

Dimension of Base Plate—25 mm (1 in.) in thickness by 100 mm (4 in.) in diameter.

Dimensions of Disk—0.8 mm (1/32 in.) in thickness by 76 mm (3 in.) in diameter.

Speed of Vertical Shaft—1 revolution in 6 min, 40 s.

Upward Movement of Base Plate—2 mm (1/13 in.) per revolution.

Torque on Disk when Bob Reading is 100—1.41 N·m.

FIG. 2 Emley Plasticimeter

NOTE 2—Most lime hydrates will require 250 to 300 mL of water to produce a putty of proper consistency for this test if 300 g of lime are used.

6.3.2 *Mechanical Mixing Procedure Using the Hobart N-50 Mixer*—To a measured amount of water contained in the N-50 mixing bowl, add 600 g of hydrated lime and hand mix for 10 s with a stiff spatula (Note 3). Cover putty to prevent evaporation of water. After the applicable soaking period, 30 min maximum for Type S, special hydrated lime, and not less than 16 h nor more than 24 h for Type N, normal hydrated lime, insert the paddle assembly and mix the putty for 1 min at a slow speed. Stop the mixer and scrape down the paddle and the sides of the mixing bowl. Remix for 4 min at a slow speed. Determine the consistency as prescribed in 11.3. If the penetration is less than 15 mm, return all of the material to the mixing bowl, add additional water, and remix for 15 s. If the penetration is more than 25 mm, repeat the test.

NOTE 3—Most lime hydrates will require 500 to 600 mL of water to produce a putty of proper consistency for this test if 600 g of lime are used.

6.3.3 *Consistency Determination*—To determine consistency, place the mold with its larger end resting on the glass base plate and fill with the lime putty. Then strike off the putty flush with the top of the mold. Center the lime putty, confined in the ring mold resting on the plate, under the rod of the modified Vicat apparatus (Fig. 1). Bring the plunger end, *C*, in contact with the surface of the lime putty and take an initial reading. Release the rod and take the final reading

[6] A Vac-U-Mixer or an N-50 Hobart Mixer, or equivalent, has been found ıitable for this purpose.

000219

er the plunger is released. The lime putty is of andard consistency when a penetration of 20 ± 5 mm is tained. Record both the total amount of water required to ring the putty to standard consistency and the actual enetration. Proceed with the plasticity determination in ccordance with 7.3.

6.4 *Precision and Bias:*

6.4.1 The precision and bias of this test method has not een determined.

. Plasticity of Lime Putty

7.1 *Significance and Use:*

7.1.1 This test method provides a measure of the degree of tiffening of lime putty of standard consistency as water is vithdrawn from it by a standard suction base plate.

7.1.2 Plasticity is an important property when applying nixtures containing lime putty to porous or absorptive urfaces such as in plastering, stuccoing, and masonry onstruction.

7.2 *Apparatus:*

7.2.1 Determine the plasticity of lime putty using the lasticimeter shown in Fig. 2.[7]

7.2.2 *Cleaning and Care of Base Plates*—In making the lasticity determinations, much of the success attainable depends upon the condition of the base plates. In the case of porcelain plates which are reused, improper cleaning results in clogging of the pores with reduction in the rate of tion. After a plate has been used, wipe the excess lime d immerse the plate in clear water for not less than 2 h, after which transfer it without drying to a dilute solution of hydrochloric acid (HCl, 1+9) where it shall be kept immersed for another 2 h. Then transfer to a receptacle containing running water for at least 1 h. The plate is then free of acid. After the removal of excess water, place the plate in an oven overnight at a temperature of between 100 and 110°C (212 and 230°F) for drying. Before using, cool the plate to room temperature.

7.2.3 *Absorption of Plasticimeter Base Plates:*

7.2.3.1 *Total Absorption*—Plasticimeter base plates when immersed in water at room temperature for a period of 24 h shall absorb not less than 40 g of water. Before making the determination, dry the porcelain plates overnight in an oven at temperatures of between 100 and 110°C (212 and 230°F) and permit to cool to room temperature. Dry the plaster plates overnight over calcium chloride at room temperature. After immersion and before weighing, wipe off the excess water with a damp cloth.

7.2.3.2 *Rate of Absorption (Note 3)*—When tested over an area 70 mm (2¾ in.) in diameter, the water absorbed shall be in accordance with the following:

Time, min	Water Absorbed, mL
1	8 to 14
2	5 to 7½
3	4 to 6½
4	4 to 6
5	3½ to 5½

OTE 4—A convenient apparatus for determining the rate of absorp- consists of a buret sealed onto an inverted glass funnel from which the stem has been removed. The diameter of the larger end of the funnel shall be ground so as to be 70 mm (2¾ in.) in internal diameter. The funnel may be attached to the plate on which the measurement is being made by melted paraffin. The paraffin should not be too hot. A little experience will indicate when it is of the proper consistency.

7.3 *Plasticity Determination:*

7.3.1 Lubricate a ring mold such as is described in 6.2.2 with a thin film of water, place on a porcelain base plate (see 7.2.2 and 7.2.3) or a disposable plaster base plate (see 7.2.3), fill with the paste which has been adjusted to standard consistency as described in 6.3.3, and strike off level. Remove the mold by raising it vertically without distorting the paste. Center the base plate and paste in the instrument and turn the carriage up by hand until the surface of the paste is in contact with the disk and the distance between the disk and the top of the base plate is 32 mm (1¼ in.). Throw the carriage into gear and start the motor. It is essential that the motor be started exactly 120 s after the first portion of the paste has been placed in the mold. Record the time when the first portion of paste is placed in the mold as zero time: the motor is therefore started at 2 min. Take care to protect the specimen from drafts during the test.

7.3.2 Record the scale reading at 1-min intervals until the test is completed. Consider the test complete when: (*1*) the scale reading reaches 100, (*2*) any reading is less than the one before, or (*3*) the scale reading remains constant for three consecutive readings (2 min) and the specimen has visibly ruptured or broken loose from the base plate. Note the time and the scale reading at the end of the test.

7.4 *Calculation:*

7.4.1 Calculate the plasticity figure as follows:

$$P = \sqrt{F^2 + (10T)^2}$$

where

P = plasticity figure,

F = scale reading at the end of the test, and

T = time in minutes from the time when the first portion of paste was put in the mold to the end of the test.

7.5 *Precision and Bias:*

7.5.1 There are as yet insufficient analyzed data to permit preparation of a precision and bias statement for this test method. When data are collected and analyzed, precision and bias statements will be proposed.

8. Autoclave Expansion of Hydrated Lime

8.1 *Significance and Use:*

8.1.1 Expansion of pressed tablets of hydrated lime generally indicates the presence of unhydrated oxides of magnesium and calcium. The relation of the degree of expansion in this test method to field performance has not been determined.

8.2 *Apparatus:*

8.2.1 *Mold and Press*—A steel mold capable of producing a press tablet at least 0.032 m (1.25 in.) in diameter and 0.006 m (0.25 in.) thick, and able to sustain at least 88.9 kN (20 000 lbf) pressure from a suitable press. It should be provided with a release jig also.

8.2.2 *Autoclave*, capable of holding 1034 kPa (150 psi) for 2 h.

8.2.3 *Micrometer*, dial-type, capable of measuring 2.54 µm (0.0001 in.).

[7] Emley Plasticimeters are no longer manufactured. If test is required, contact the chairman of Subcommittee C07.06 through ASTM Headquarters, 1916 Race St., Philadelphia, PA 19103.

000220

8.2.4 *Microscope*, with graduated lens for measuring 0.10 mm.

8.3 *Procedure:*

8.3.1 Weigh out 15 g of hydrated sample, place in the mold, and press into a tablet. Press to 33.4 kN (7500 lbf) for 10 s, then increase pressure to 88.9 kN (20 000 lbf) or more. Hold for 10 s before releasing. Press tablet from mold with jig and draw three diameter lines across the surface of the tablet using a lead pencil. Draw two diameter lines normal to each other and draw the third bisecting the 90° angles of the other two. Measure the diameters with a dial micrometer and place the tablet on the autoclave rack. Use aluminum foil to protect the tablets from water dripping. Autoclave at 862 to 1034 kPa (125 to 150 psi) for 2 h. Begin timing when the pressure reaches 345 kPa (50 psi). After the autoclaving interval, allow the autoclave to cool, remove the tablet, and remeasure the diameters. Calculate the average percent expansion of the tablet from the before and after measurements.

8.4 *Expansion of Hydrated Lime-Portland Cement-Aggregate:*

8.4.1 *Materials:*

8.4.1.1 *Standard Cement*—Type I or Type II portland cement.

8.4.1.2 *Standard Aggregate*—Pulverized limestone, minus 212-µm (No. 70) sieve, having less than 0.5 % silicon dioxide (SiO_2).

8.4.2 *Procedure:*

8.4.2.1 *Test Tablet*—Make up a pressed tablet in accordance with the procedure outlined in 8.3.1 using the following mixture for the sample:

Standard portland cement	14 g
Hydrated lime	8 g
Standard aggregate (pulverized limestone)	72 g

Blend the mix until homogeneous.

8.4.2.2 *Standard Tablet*—Make up a pressed tablet in accordance with the procedure outlined in 8.3.1 using the following mixture for the sample:

Standard portland cement	7 g
Standard aggregate (pulverized limestone)	16 g

Blend the mix until homogeneous.

8.4.2.3 Autoclave and calculate expansions of the test tablet and the standard tablet in accordance with 8.3.1.

8.4.2.4 Determine the autoclave expansion of hydrated lime for masonry purposes by subtracting the average percent expansion of the standard tablet from the sample tablet.

8.5 *Precision and Bias:*

8.5.1 No precision data are available due to the limited use of this test method. Therefore, users are advised to develop their own laboratory precision. No statement is being made about the bias of this test method.

9. Popping and Pitting of Hydrated Lime

9.1 *Significance and Use:*

9.1.1 Pops and pits are caused by the hydration and expansion of coarse particles of unhydrated lime or lime-impurity reaction products present in the hydrated lime. The level of popping and pitting in the sample is indicative of the potential for the appearance of surface defects in plastering applications.

9.2 *Gauging Plaster:*

9.2.1 The gauging plaster used for the popping and pitting test shall conform to the Test Methods section of Specification C 28 and shall have a setting time of not more than 1 h when tested in accordance with Test Methods C 472. Test the gauging plaster without lime in the manner described in 9.3 to ensure its freedom from pops and pits. If any pops or pits are found, provide another lot of gauging plaster that is free of pops and pits when subjected to this test.

9.3 *Procedure:*

9.3.1 Mix 100 g of hydrated lime with sufficient water to bring to such a consistency as to give a penetration of 20 ± 5 mm when tested in accordance with 6.3.3. Mix into this putty, 25 g of gauging plaster (9.2.1), adding more water as required to maintain workable consistency. Spread on a glass plate to make a pat at least 150 by 200 mm (6 by 8 in.) by approximately 3 mm (⅛ in.) in thickness. Trowel to a smooth finish. Allow to stand overnight.

9.3.2 Place the specimen and plate on a rack in the steam bath so that water is not in contact with the specimen to be tested. Provide a sloping cover above the specimen to prevent condensed steam from dripping onto the surface of the specimen. Raise the temperature of the water in the steam bath to boiling and maintain at boiling for 5 h. Remove the specimens from the bath and examine for pops and pits.

9.3.3 The pitting potential of hydrated lime can be determined in conjunction with autoclave expansion as in 20.1. However, it is not necessary to measure diameter, if only the pitting potential is to be determined. After following the procedure for expansion in 8.3.1, examine the pressed tablet under the measuring microscope, and count and measure the pits in millimetres.

10. Water Retention of Hydrated Lime

10.1 *Significance and Use:*

10.1.1 This test method measures the ability of the hydrated lime in a plastic mix with sand to retain water, and hence retain consistency of the mix, when subjected to an applied suction. This ability, measured as a percent of the original consistency, is indicative of the workability to be expected in a masonry containing the lime.

10.2 *Proportioning and Mixing:*

10.2.1 *Apparatus*—The apparatus used shall conform to Practice C 305.

10.2.2 *Proportions*—The mortar tested shall be composed of 500 g of lime and 1500 g of standard sand conforming to 41.4. If hydrated lime putty is used, use that weight of putty that is equivalent to 500 g of dry hydrated lime.

10.2.3 *Mechanical Mixing:*

10.2.3.1 Place the dry paddle and the dry bowl in the mixing position in the mixer.

10.2.3.2 Place a measured quantity of water in the bowl.

10.2.3.3 Add the lime to the water, then start the mixer and mix at slow speed (140 ± 5 r/min) for 30 s.

10.2.4 Add the entire quantity of sand slowly over a 30-s period while mixing at slow speed.

10.2.5 Stop the mixer, change to medium speed (285 ± 10 rpm) and mix for 30 s.

10.2.6 Stop the mixer and let the mortar stand for 1½ min. (During the first 15 s of this interval, quickly scrape

000221

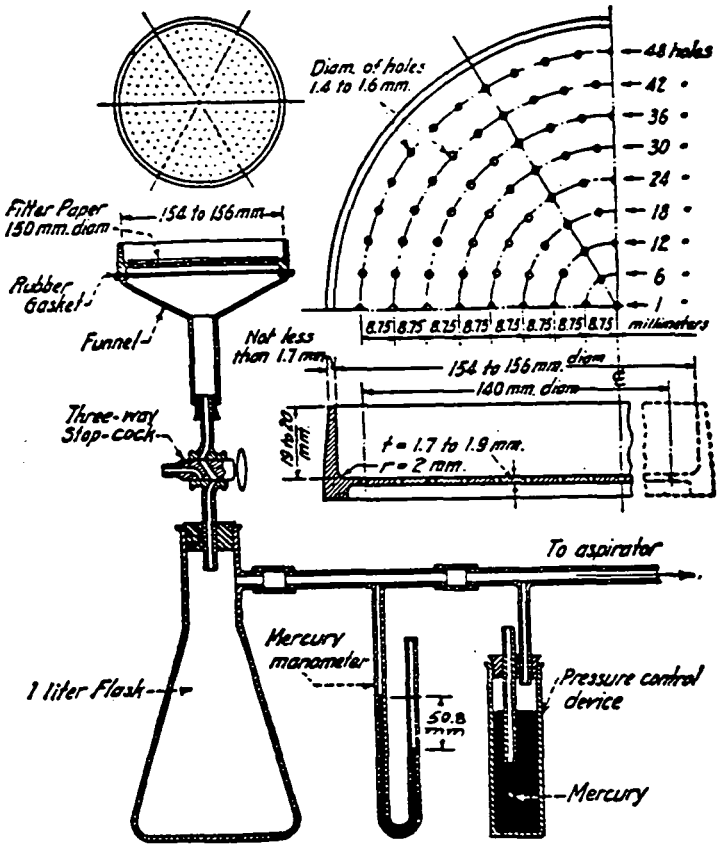

FIG. 3 Apparatus Assembly for the Water Retention Test

down into the batch any mortar that may have collected on the side of the bowl, then for the remainder of this interval cover the bowl with the lid.)

10.2.7 Finish the mixing for 1 min at medium speed.

10.2.8 In any case requiring a remixing interval, any mortar adhering to the side of the bowl shall be quickly scraped down into the batch prior to remixing.

10.3 *Consistency:*

10.3.1 *Apparatus*—The flow table and mold used for the measurement of consistency of the mortar shall conform to Specification C 230.

10.3.2 *Procedure*—Carefully wipe dry the flow table top and place the flow mold at the center. Immediately after completing the mixing operation, fill the mold with mortar gently pressed into place by the finger tips to ensure uniform filling free of voids. Smooth off the mortar level with the top of the mold by aid of a trowel, and remove the mold. Immediately drop the table through a height of 13 mm (½ in.), 25 times in 15 s. The flow is the resulting increase in diameter of the mortar mass, expressed as the percentage of the original diameter. The mortar may be adjusted, if the flow is below 100 %, by additions of water until the flow is within the range from 100 to 115 %. Make each adjustment returning the mortar to the original mixing bowl, add ater, and then mix at medium speed (285 ± 10 r/min) for 0 s. If the flow of the original mortar is greater than 115 %, prepare a new batch.

10.4 *Water Retention Test:*

10.4.1 *Apparatus*—The equipment used to determine water retention shall conform to the same apparatus used for the water retention test in Specification C 91 (see Fig. 3).

10.4.2 *Procedure:*

10.4.2.1 Adjust the mercury relief column to maintain a vacuum of 50.8 mm as measured on the manometer. Seat the perforated dish on the greased gasket of the funnel. Place a wetted filter paper in the bottom of the dish. Turn the stopcock to apply the vacuum to the funnel and check the apparatus for leaks and to determine that the required vacuum is obtained. Then turn the stopcock to shut off the vacuum from the funnel.

10.4.2.2 Immediately after the final consistency test (10.3.2), return all of the mortar to the bowl and remix the entire batch for 15 s at medium speed. Immediately after remixing the mortar, fill the perforated dish with the mortar to slightly above the rim. Tamp the mortar 15 times with the tamper. Apply ten of the tamping strokes at approximately uniform spacing adjacent to the rim of the dish and with the long axis of the tamping face held at right angles, to the radius of the dish. Apply the remaining five tamping strokes at random points distributed over the central area of the dish. The tamping pressure shall be just sufficient to ensure filling of the dish. On completion of the tamping, the top of the mortar should extend slightly above the rim of the dish. Smooth off the mortar by drawing the flat side of the straightedge (with the leading edge slightly raised) across the top of the dish. Then cut off the mortar to a plane surface flush with the rim of the dish by drawing the straightedge with a sawing motion across the top of the dish in two

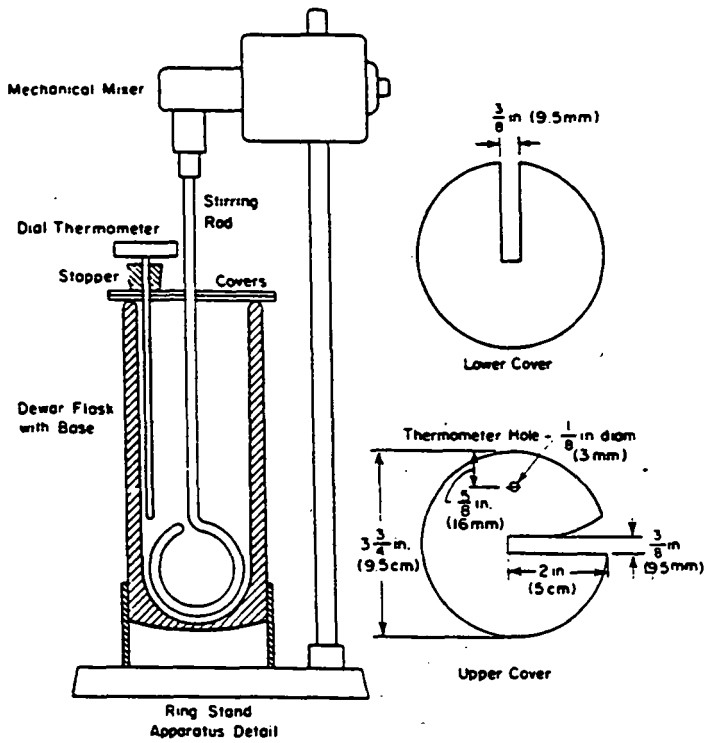

FIG. 4 Slaking Reactivity Apparatus

cutting strokes, starting each cut near the center of the dish. If the mortar is pulled away from the side of the dish during the process of cutting off the excess mortar, gently press the mortar back into contact with the side of the dish using the tamper.

10.4.2.3 Turn the stopcock to apply vacuum to the funnel. After suction for 60 s, quickly turn the stopcock to expose the funnel to atmospheric pressure. Immediately slide the perforated dish off the funnel, touch it momentarily on a damp cloth to remove droplets of water, and set the dish on the table. Then using the bowl scraper (rubber scraper as specified in Practice C 305), plow and mix the mortar in the dish for 15 s. Upon completion of mixing, place the mortar in the flow mold and determine the flow. Carry out the entire operation without interruption and as quickly as possible. Not more than 30 min should be required for completion, starting from the completion of the mixing of the mortar for the first flow determination.

10.4.3 *Calculation:*

10.4.3.1 Calculate the water retention value for the mortar as follows:

$$\text{Water retention value} = (A/B) \times 100$$

where:

A = flow after suction, and
B = flow immediately after mixing.

10.5 *Precision and Bias:*

10.5.1 No precision data are available due to the limited use of this test method. Therefore, users are advised to develop their own laboratory precision.

11. Settling Rate of Hydrated Lime

11.1 *Significance and Use:*

11.1.1 This test method provides a measure of the rate of settling of a hydrated lime slurry, a form in which this material is frequently used. In some applications a slow settling slurry is desirable; in others, fast settling is preferred.

11.2 *Procedure:*

11.2.1 Place 10.0 g of lime hydrate in a 100-mL glass-stoppered graduated cylinder (internal diameter about 24 mm). Wet with 50 mL of carbon dioxide (CO_2) free distilled water at 23 ± 1.7°C (73.4 ± 3°F) and mix thoroughly by alternately inverting and righting the cylinder slowly for a period of 2 min. Allow the graduate and contents to stand at 23 ± 1.7°C for 30 min and then dilute to the 100-mL mark with CO_2-free distilled water at 23 ± 1.7°C. Mix contents again thoroughly as before and allow to stand undisturbed at 23 ± 1.7°C for 24 h.

11.3 *Report:*

11.3.1 Report the sedimentation height in millilitres after ¼, ½, ¾, 1, 2, 4, and 24 h, reading the bottom of the meniscus.

NOTE 5—Slight variations in results of this test method on a sample run in different laboratories or by different operators are permissible. The test is not an absolute one, but is designed to distinguish between fast and slow settling hydrates.

11.4 *Precision and Bias:*

11.4.1 No precision data are available due to the limited use of this test method. Therefore, users are advised to develop their own laboratory precision.

12. Slaking Rate of Quicklime

12.1 Significance and Use:

12.1.1 The temperature rise in 30 s is a measure of the reactivity of the softer-burned portion of the quicklime. Total slaking time provides a measure of the overall degree

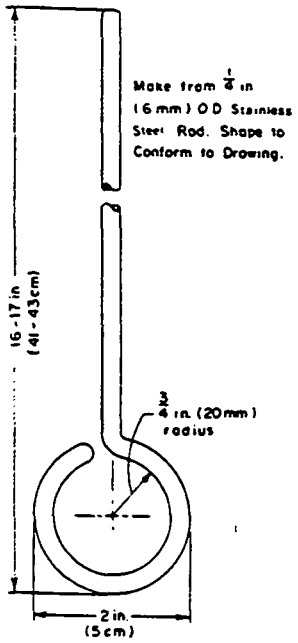

FIG. 5 Stirring Rod Detail

of reactivity of the material. Total temperature rise is largely [illegible]endent on the available lime content of the sample.

[illegible].1.2 These slaking parameters provide an indication of [illegible] performance of the quicklime to be expected in industrial slaking systems. Slaking characteristics have an effect on lime slurry properties such as settling characteristics, viscosity, particle size, and reaction rate.

12.2 *Apparatus:*

12.2.1 *Mechanical Stirrer,*[8] speed 400 ± 50 r/min, fitted with a special stirring rod.

12.2.2 *Modified Dewar Flask,*[9] 665-mL, fitted with special rubber gasket covers.

12.2.3 *Thermometer,* dial-type, 0 to 100°C range in 1°C increments.

12.2.4 *Torsion Balance.*

12.2.5 *Sieve,* 203-mm (8-in.), 3.35-mm (No. 6), conforming to Specification E 11.

12.2.6 An apparatus essentially the same as that illustrated in Figs. 4 and 5 shall be used. The apparatus consists of a covered reaction container fitted with a mechanical stirrer and thermometer. The quicklime charge shall be stirred with a mechanical stirrer fitted with a stainless steel rod, the end of which is formed into a loop to follow the contour of the reaction container. The vacuum reaction flask shall be provided with a cover consisting of two circular pieces of gasket rubber sheet, approximately 3 mm (⅛ in.) thick. The first piece is provided with a single radial slot that slides over the stirring rod and the thermometer. The second [illegible] (top) has a similar slot plus a hole to provide for the [illegible] thermometer. When the two cover pieces are in place, [illegible] slot on the lower piece is at right angles to the slot on the upper piece with the thermometer stem extending through the lower slot. The apparatus may be assembled by any convenient supporting equipment.

TABLE 1 Schedule for Slaking Rate

	Material to Be Tested	
	Dolomitic	High Calcium
Temperature of water, °C	40	25[A]
Quantity of water, mL	400	400
Quantity of quicklime, g	120	100

[A] Initial temperature of 40°C may be used, provided the report of results states the initial temperature.

12.3 *Procedure:*

12.3.1 Prepare the sample of quicklime to pass a 3.35-mm (No. 6) sieve as rapidly as possible to prevent sample deterioration. Place the prepared sample in an airtight container and allow to come to room temperature before testing.

12.3.2 *Slaking Rate*—Adjust the temperature of about 500 mL of distilled water in accordance with the schedule given in Table 1, and add the specified amount to the Dewar flask. Set the agitator revolving at 400 ± 50 r/min. The temperature of the water in the flask must be ±0.5°C of the desired temperature. Quarter and weigh out the required amount of the prepared quicklime sample. Add the quicklime to the water without delay. Put the covers in place immediately. Take a reading at each 30 s after adding the quicklime.

12.3.3 Continue readings until less than 0.5°C temperature change is noted in each of three consecutive readings. The total active slaking time will then be the time at which the first of the three consecutive readings was taken. The temperature at this time will be considered the final reaction temperature. Subtract the initial temperature from the final temperature to obtain the total temperature rise. Subtract the initial temperature from the temperature at 30 s for the temperature rise in 30 s. Subtract the initial temperature from the temperature at 3 min for the temperature rise in 3 min.

12.4 *Report:*

12.4.1 Record the actual temperature rise and plot a suitable curve showing temperature rise as the ordinate and time as the abscissa. The results may also be reported as:

12.4.1.1 Temperature rise in 30 s (or at any other designated time) in degrees Celsius,

12.4.1.2 Total temperature rise in degrees Celsius, and

12.4.1.3 Total active slaking time in minutes.

12.5 *Precision and Bias:*

12.5.1 There are as yet insufficient analyzed data to permit preparation of a precision and bias statement for this test method. When data are collected and analyzed, precision and bias statements will be proposed.

13. Air Entrainment

13.1 *Significance and Use:*

13.1.1 Hydrated lime, particularly that containing an air-entraining additive, used in masonry mortar may contribute to the air content of the mortar. Certain specifications and applications of mortar place a limit on this air content.

13.2 *Apparatus:*

13.2.1 *Scales, Sieves, Glass Graduates, Tamper, Measure, Straightedge, Spatula, Tapping Stick, and Spoon,* con-

[8] A Fisher 14-498, or equivalent, has been found suitable for this p[illegible]

[9] A Fisher 10-197, or equivalent, has been found suitable for this p[illegible]

TABLE 2 Unit Weights and Apparent Specific Gravities

Materials	Unit weight, kg/m³ (lb/ft³)[A]	Specific Gravity
Portland cement	1 504 (94)	3.15
Hydrated lime	800 (50)	2.30
Blended Ottawa sand	1 280 (80)	2.65

[A] The unit weight values listed for cementitious materials are assumed values commonly used in construction practice.

TABLE 3 Weight of Materials for Mortar Batch

Mortar Type (C 270)	Proportions by Volume	Portland Cement, g	Hydrated Lime, g	Blended Ottawa Sand, g
M	1:¼:3	564	75	1 440
S	1:½:4½	376	100	1 440
N	1:1:6	282	150	1 440
O	1:2:9	188	200	1 440

forming to the requirements given in Test Method C 185.

13.2.2 *Flow Table*, conforming to the requirements prescribed in Specification C 230.

13.2.3 *Mixing Apparatus*, conforming to the requirements as prescribed in Practice C 305.

13.2.4 The sand shall be a blend of equal parts by weight of graded Ottawa sand and standard 20–30 Ottawa sand. The fineness of graded Ottawa sand and standard 20–30 sand may be checked by using the methods described in Specification C 778.

13.3 *Preparation of Mortar:*

13.3.1 *Proportions for Mortar*—Portland cement-hydrated lime mortar for measurement of air entrainment shall be proportioned to conform, in batch size, to the unit weights by volume of cementitious material and aggregate as shown in Table 2. The portland cement shall conform to Specification C 150, and the hydrated lime to Specification C 207. The quantity of water, measured in millilitres, shall be such as to produce a flow of 110 ± 5 % as determined by the flow table. Proportions for the generally used batch sizes based on Table 2 material unit weight shall contain the weights as prescribed in Table 3.

13.3.2 *Mixing of Mortars*—Mix the mortar in accordance with the procedure for mixing pastes in Practice C 305.

13.3.3 *Determination of Flow*—Determine the flow in accordance with the Procedure section of Test Method C 109.

13.4 *Procedure:*

13.4.1 If the mortar has the correct flow, use a separate portion of the mortar for the determination of entrained air. Determine the weight of 400 mL of mortar in accordance with Test Method C 185.

13.5 *Calculation:*

13.5.1 Calculate the air content of the mortar and report it to the nearest 0.1 % as follows:

$$D = (W_1 + W_2 + W_3 + V_w) / [(W_1/S_1) + (W_2/S_2) + (W_3/S_3)\ V_w]$$

$$A = 100 - (W_m/4D)$$

where:

D = density of air-free mortar,
W_1 = weight of portland cement, g,
W_2 = weight of hydrated lime, g,
W_3 = weight of blended Ottawa sand, g,
V_w = water used, mL,
S_1 = specific gravity of portland cement,
S_2 = specific gravity of hydrated lime,
S_3 = specific gravity of blended Ottawa sand,
A = volume % of entrained air, and
W_m = weight of 400 mL of mortar, g.

13.6 *Precision and Bias:*

13.6.1 The single operator within laboratory standard deviation has been found to be 0.56 % air content throughout the range of 8 % to 19 % air content. Therefore results of two properly conducted tests by the same operator on similar batches of mortar should not differ by more than 1.6 % air content.

13.6.2 The multilaboratory standard deviation has been found to be 1.0 % air content throughout the range of 8 % to 19 % air content. Therefore, results of two different laboratories on similar batches of mortar should not differ from each other by more than 2.8 % air content (see Test Method C 185).

14. pH of Pulverized Limestone

14.1 *Significance and Use:*

14.1.1 Small amounts of lime (calcium oxide or hydroxide) may be produced in the drying of limestone, or from heat generated in the grinding process, thus contributing to the alkalinity of the product. High alkalinity is deleterious in some applications.

14.2 *Apparatus and Materials:*

14.2.1 *Volumetric Flask*, 1-L capacity.

14.2.2 *Beckman pH Meter*, or equivalent.

14.2.3 *Pipet*, 50-mL.

14.2.4 *Beaker*, 100-mL.

14.2.5 *Buffer*, pH 9, standard solution.

14.3 *Procedure:*

14.3.1 Weigh 20 ± 0.1 g of sample, and transfer to a 1-L volumetric flask. Make up to the mark with distilled water (Note 6). Shake the contents vigorously for 1 min and allow to stand for 20 min permitting the suspension to settle.

NOTE 6—The distilled water should be boiled and cooled immediately prior to use.

14.3.2 Standardize the pH meter to pH 9 with standard buffer solution.

14.3.3 Pipet a 50-mL aliquot of the clear solution from the volumetric flask into the beaker. Take three pH readings within 30 to 60 s after transfer and record the average.

14.4 *Precision and Bias:*

14.4.1 Separate readings should check within 0.05-scale divisions.

15. Particle Size of Pulverized Limestone

15.1 *Significance and Use:*

15.1.1 Particle size of pulverized limestone, as the word is used in these methods, is the percent distribution of the equivalent spherical diameter of the individual particles expressed in micrometres, using the principle of sedimentation and Stokes' law for particle size determination. It is intended for use with pulverized limestones with not more than 0.5 % residue on a 45-µm (No. 325) sieve.

15.2 *Apparatus:*

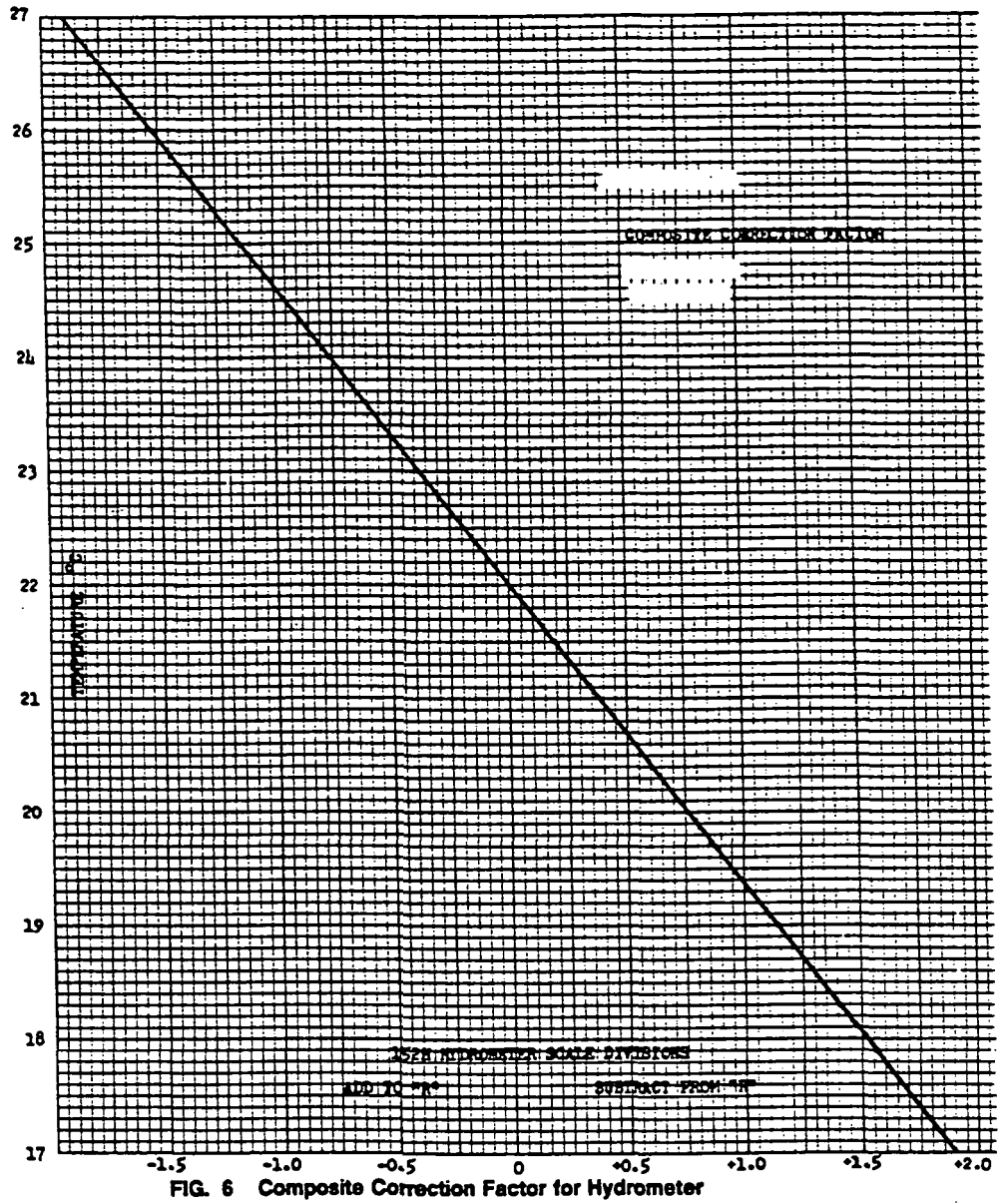

FIG. 6 Composite Correction Factor for Hydrometer

15.2.1 *Soil Hydrometer,* ASTM 152H.[10]

15.2.2 *Sedimentation Cylinder,* ASTM, 1000-mL capacity.

15.2.3 *Rubber Stopper,* Size 12.

15.2.4 *Thermometer,* 0 to 105°C.

15.2.5 *Stop Watch.*

15.2.6 *Regular Clock or Watch.*

15.2.7 *Mixer.*[11]

15.2.8 *Water Bath.*

15.2.9 *Balance.*[12]

15.2.10 *Watch Glass.*

15.2.11 *Graph Paper,*[13] 3 cycles × 70 divisions.

15.2.12 *Sieve,* 45-µm (No. 325), stainless steel cloth, brass frame, 8-in. diameter.

15.2.13 *Sieve,* 500-mesh, stainless steel cloth, brass frame, 4-in. diameter, 5-in. tall frame.

15.3 *Reagents:*

15.3.1 *Particle-Dispersing Agent*[14] (30 mL of 25 % solution is diluted up to 400 mL with distilled water).

15.4 *Procedure:*

15.4.1 Determine meniscus correction by inserting the hydrometer in the sedimentation cylinder filled to mark with distilled water. Record the reading at the top of the meniscus and at the bottom of the meniscus. The difference between the two readings is the meniscus correction. For example, in Fig. 6, the correction for the hydrometer used is 1.2. This reading is *added* to each R to obtain R_c.

[10] Available from Taylor Instrument Co., Catalog No. 22297.

[11] The Hamilton Beach Model No. 210 mixer, or equivalent, has been found suitable for this purpose.

[12] The O'Haus CG 311 balance, or equivalent, has been found suitable.

[13] Dietzgen No. 340-L310 or Keuffel and Esser No. 359-71G graph paper, or equivalent, has been found suitable.

[14] Daxad 30, a particle dispersing agent, has been found suitable, and is available from the Dewey and Almy Div. of W. R. Grace Co.

TABLE 4 Hydrometer Composite Correction Factor

Temperature, °C	Correction Factor
17	+1.90
18	+1.52
19	+1.14
20	+0.76
21	+0.39
22	0.00
23	−0.38
24	−0.76
25	−1.14
26	−1.52
27	−1.90

15.4.2 Calibrate the hydrometer by adding 30 mL of the particle-dispersing solution to the sedimentation cylinder, then bringing up to the mark with distilled water at 27°C. Mix thoroughly and take a hydrometer reading (read at the top of the meniscus). Repeat after cooling the cylinder to 17°C and adjusting the meniscus so it is on the mark. Assume a straight-line relationship and draw a line that gives the *composite correction factor.* This factor is the difference between the reading and zero. These are the corrections entered in Table 4 and should be determined for each hydrometer. Four factors are compensated for in the correction factor: (*a*) *Temperature:* Hydrometers and cylinders are calibrated at 20°C; variations from this temperature produce inaccuracy in the hydrometer reading; (*b*) *Specific gravity:* Addition of dispersant changes the specific gravity of the solution; (*c*) *Meniscus correction:* Hydrometers are graduated to read at the bottom of the meniscus but opaque calcium carbonate solutions require readings at the top of the meniscus; and (*d*) *Hydrometers:* In spite of the supposed similarity in volume of the hydrometers (ASTM 152H), variations of as much as 1.0-scale divisions between two similar hydrometers have been noted. The correction factor brings all four into line with one another. It is not necessary to repeat this calibration unless changing to a different hydrometer.

15.4.3 Weigh 40 g of sample.

15.4.4 Add approximately 300 mL of distilled water to the mixer, 30 mL of the particle-dispersing solution, followed by 40 g of unknown sample. Cover. Agitate for exactly 2 min at high speed.

15.4.5 Transfer the slurry quantitatively to the 1000-mL sedimentation cylinder. Make up to approximately 3.2 mm (⅛ in.) above the mark since it must be read from the top (as the bottom of the meniscus is not visible) and this will approximate the 1000-mL calibration of the cylinder. Cylinder temperature can be adjusted to 20°C by running cool water on the outside of the cylinder and stirring with a thermometer until 20°C is reached. Cap with the rubber stopper. Mix well by inverting the cylinder 15 or more times. Remove the stopper and put the cylinder in a water bath that has been previously adjusted to as close to 20°C as is possible. Start the stop watch and note the time on the clock. At exactly 4½ min after start, carefully insert the hydrometer to the approximate point where the reading is to be made. Take the reading at exactly 5 min. Record the reading and temperature (Note 7). Remove the hydrometer and wash clean of any slurry. Cover the cylinder with the watch glass.

TABLE 5 Effective Depth, *L*, for Hydrometer 152H

R_r	*L*, cm	R_r	*L*, cm
0	16.3	31	11.2
1	16.1	32	11.1
2	16.0	33	10.9
3	15.8	34	10.7
4	15.6	35	10.6
5	15.5	36	10.4
6	15.3	37	10.2
7	15.2	38	10.1
8	15.0	39	9.9
9	14.8	40	9.7
10	14.7	41	9.6
11	14.5	42	9.4
12	14.3	43	9.2
13	14.2	44	9.1
14	14.0	45	8.9
15	13.8	46	8.8
16	13.7	47	8.6
17	13.5	48	8.4
18	13.3	49	8.3
19	13.2	50	8.1
20	13.0	51	7.9
21	12.9	52	7.8
22	12.7	53	7.6
23	12.5	54	7.4
24	12.4	55	7.3
25	12.2	56	7.1
26	12.0	57	7.0
27	11.9	58	6.8
28	11.7	59	6.6
29	11.5	60	6.5
30	11.4		

NOTE 7—Temperature must be taken inside the cylinder and not in the water bath.

15.4.6 Take additional readings at 15, 30, 60, 120, *or* 180 min; 300 *or* 360 min; and 1200 *or* 1440 min after the start.

15.4.7 Take a 25-g sample and run a 500-mesh wet-sieve test. The opening of the 500-mesh sieve is approximately 25 µm. From this result calculate the percent finer than 25 µm. Do not discard the plus 500-mesh but use this with the 45-µm (No. 325) sieve to obtain the percent finer than 44 µm. The opening of the 45-µm sieve is 44 µm.

15.5 *Calculation:*

15.5.1 Arrange the data on a sample sheet.

15.5.2 Record the date and clock readings as readings are taken.

15.5.3 Readings are usually taken at 5, 15, 30, 60, 180, 360, and 1440 min. The 25-µm point is obtained from the 500-mesh sieve result and the 44-µm point is obtained from the 45-µm sieve result.

15.5.4 Record the temperature, *T*, and the hydrometer reading, *R*, for each reading.

15.5.5 Obtain R_r by *adding* the meniscus correction to each *R* value.

15.5.6 Obtain R_c, the corrected hydrometer reading, from Fig. 6. This value can be different for each hydrometer and must be individually determined.

15.5.7 Obtain *L* from Table 5 using R_r values.

15.5.8 $\sqrt{L/T}$ is found from Fig. 7 and the values for *L* *T* (time). For times not in Fig. 7, calculate the $\sqrt{L/T}$ since the values for *L* and *T* (in minutes) are known.

15.5.9 Find *D* at 20°C in terms of $\sqrt{L/T}$ using Table 6.

15.5.10. To correct *D* for temperature, use Table 7 and

000227

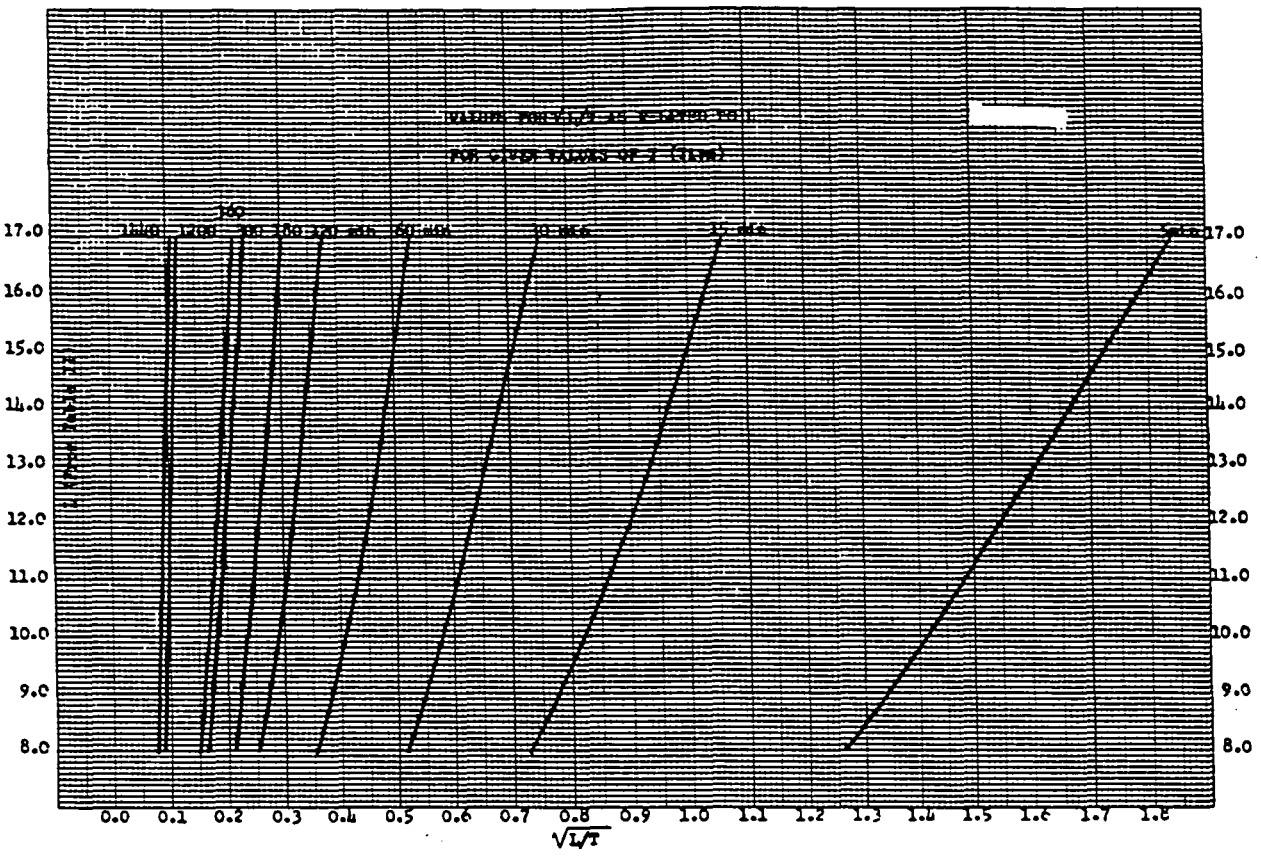

FIG. 7 Values for $\sqrt{L/T}$ as Related to L for Given Values of T (Time)

TABLE 6 D as Related to $\sqrt{L/T}$ at 20°C

$\sqrt{L/T}$	D, µm	$\sqrt{L/T}$	D, µm
0.05	0.7	1.05	14.0
0.10	1.4	1.10	14.7
0.15	2.0	1.15	15.4
0.20	2.7	1.20	16.0
0.25	3.4	1.25	16.7
0.30	4.0	1.30	17.4
0.35	4.7	1.35	18.0
0.40	5.4	1.40	18.7
0.45	6.0	1.45	19.4
0.50	6.7	1.50	20.1
0.55	7.4	1.55	20.8
0.60	8.0	1.60	21.4
0.65	8.7	1.65	22.1
0.70	9.4	1.70	22.8
0.75	10.0	1.75	23.4
0.80	10.7	1.80	24.1
0.85	11.4	1.85	24.8
0.90	12.0		
0.95	12.7		
1.00	13.4		

TABLE 7 ΔD from $\sqrt{L/T}$

$\sqrt{L/T}$	ΔD
2.0	0.32
1.9	0.31
1.8	0.29
1.7	0.27
1.6	0.26
1.5	0.24
1.4	0.23
1.3	0.21
1.2	0.19
1.1	0.18
1.0	0.16
0.9	0.15
0.8	0.13
0.7	0.11
0.6	0.10
0.5	0.08
0.4	0.07
0.3	0.05
0.2	0.03
0.1	0.02

find ΔD in terms of $\sqrt{L/T}$. Multiply by ΔT (ΔT is the difference in temperature between 20°C and the actual temperature of the test). This will give a value to be subtracted from the D found in 54.9 if the temperature is above 20°C. If the temperature is below 20° C, this correction should be added.

15.5.11 Find P by using Table 8 and the value for R_c.

15.5.12 The values of D_c are now plotted against the values of P.

15.6 *Precision and Bias:*

15.6.1 The precision and bias of this test method has not been determined.

000228

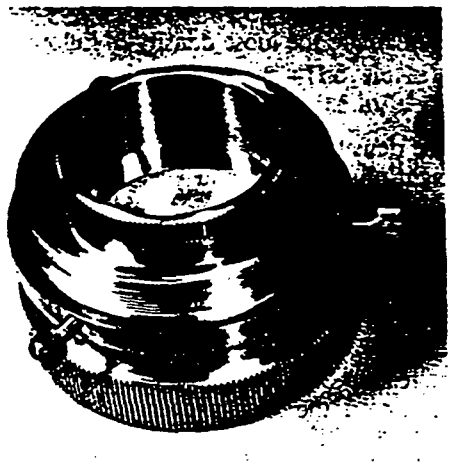

FIG. 8 Dry-Powder Press

TABLE 8 Values for P as Related to R_c, Using $a = 0.988$ and $W = 40$

NOTE—Calculate to nearest 0.1 of R_c. For a reading of 24.7, take reading of 24.5 which is 60.0 and add 2 × 0.4 or 60.8%.

R_c	P	R_c	P	R_c	P	R_c	P
0.0	0.0	11.5	28.5	23.0	57.0	34.5	85.0
0.5	1.5	12.0	30.0	23.5	58.0	35.0	86.5
1.0	2.5	12.5	31.0	24.0	59.0	35.5	87.5
1.5	3.5	13.0	32.0	24.5	60.0	36.0	89.0
2.0	5.0	13.5	33.5	25.0	62.0	36.5	90.0
2.5	6.0	14.0	35.0	25.5	63.0	37.0	91.5
3.0	7.5	14.5	36.0	26.0	64.0	37.5	92.5
3.5	8.5	15.0	37.5	26.5	65.0	38.0	94.0
4.0	10.0	15.5	38.5	27.0	66.5	38.5	95.0
4.5	11.0	16.0	39.5	27.5	67.5	39.0	96.5
5.0	12.5	16.5	40.5	28.0	69.0	39.5	97.5
5.5	13.5	17.0	42.0	28.5	70.0	40.0	99.0
6.0	15.0	17.5	43.0	29.0	71.5	40.5	100.0
6.5	16.0	18.0	44.5	29.5	72.5		
7.0	17.5	18.5	45.5	30.0	74.0		
7.5	18.5	19.0	47.0	30.5	75.0		
8.0	20.0	19.5	48.0	31.0	76.5		
8.5	21.0	20.0	49.5	31.5	77.5		
9.0	22.5	20.5	50.5	32.0	79.0		
9.5	23.5	21.0	52.0	32.5	80.0		
10.0	25.0	21.5	53.0	33.0	81.5		
10.5	26.0	22.0	54.5	33.5	82.5		
11.0	27.5	22.5	56.5	34.0	84.0		

16. Dry Brightness of Pulverized Limestone

16.1 *Summary of Test Method:*

16.1.1 A sample of the dry material is compressed and its reflectance measured on a reflectometer that has previously been standardized.

16.2 *Significance and Use:*

16.2.1 This test method provides a measure of the reflectance, or whiteness, or both of ground calcium carbonate products by comparison with a standard, using green and blue filters.

16.3 *Apparatus:*

16.3.1 *Reflectometer:*[15]

16.3.2 *Dry Powder Press*[16]—Instructions, as supplied by the manufacturer, for preparation of the sample and use of the powder press shall be explicitly followed.

16.3.3 *White Porcelain Standard Plaque*, to be used as secondary standard.

16.4 *Reagent:*

16.4.1 *Barium Sulfate* ($BaSO_4$)—Use Eastman Kodak[17] Chemical No. 6091, white reflectance standard only.

16.5 *Calibration and Standardization:*

16.5.1 *Zero Scale Calibration (bottom of scale standardization):*

16.5.1.1 Place the black glass provided with the instrument over the specimen port, so that the shiny side is towards the opening. The glass should be positioned so that no light escapes from the black glass-opening interface.

16.5.1.2 The processor is then adjusted to read *zero reflectance.*

16.5.2 *Standardizing of the White Standard (standardization of the upper part of the scale):*

16.5.2.1 A primary standard pellet (barium sulfate) which is free from surface flaws should be positioned over the specimen port so that no light can escape at the pellet-opening interface.

16.5.2.2 The Eastman Kodak barium sulfate reflectance standard is provided with reflectance values at various wavelengths. Since some variation is possible between lots of $BaSO_4$, the values used to standardize the reflectometer must be calculated. A normal Y value will be between 99.0 and 98.5, depending on the lot number.

16.5.2.3 After this has been accomplished, a reading of the white standard plaque can be taken and the values of X, Y, and Z recorded. This plaque can then be used as a secondary standard for future standardizations. This reduces the necessity of making a barium sulfate pellet for every test series.

16.6 *Procedure:*

16.6.1 The reflectometer must be given ample warm-up time prior to the sample readings.

16.6.2 The reflectometer must first be standardized; this consists of standardization of the bottom of the scale and standardization of the upper part of the scale.

16.6.3 Sample pellets should then be pressed (Note 8) following manufacturer instructions explicitly (Note 9).

NOTE 8—Ground products with more than 0.5 % residue on a 45-µm (No. 325) screen will require special care in preparing the sample cup. The coarser the product, the harder to obtain a compact, smooth surface.

NOTE 9—Some reflectometers and spectrophotometers can measure reflectance with the powder sample in a horizontal position, thus eliminating the necessity to prepare a sample pellet. Also, coated ground limestones are difficult to pelletize. Loose powder samples should be smoothed in a convenient sized container until the surface is level and free from cracks and other surface defects.

16.6.4 After the reflectometer has been standardized, the sample pellets are centered beneath the opening and positioned so that no light escapes from the pellet-opening interface.

16.6.5 The samples are then read for X, Y, Z, L, a, and

[15] The Hunter D25A-Tristimulus colorimeter, or equivalent, has been found suitable for this purpose.

[16] The Bausch and Lomb or Carl Zeiss Dry Powder Press Assembly, or equivalent, has been found satisfactory for this purpose.

[17] Registered trademark.

values. These values are recorded.

16.6.6 To determine if the values of the reflectometer have drifted, the white standard (either the barium sulfate pellet or the porcelain plaque) is placed over the specimen port and read. Values should be the same as those placed in the processor during the standardization procedure.

16.7 *Report:*

16.7.1 The *Y* value is recorded as the dry brightness of that specific limestone.

16.8 *Precision and Bias:*

16.8.1 The same instrument, operator, and standard should reproduce ±0.2 %. Different instrument (Note 10), operators, and standard should agree ±1.0 %.

NOTE 10—It is recognized that there are various manufacturers of reflectometers, and testing has been undertaken to relate *X*, *Y*, and *Z* tristimulus color values from one instrument to another. If results of this comparison testing are desired, please contact the Pulverized Limestone Association.

17. Apparent Loose Density of Hydrated Lime, Pulverized Quicklime, and Limestone

17.1 *Significance and Use:*

17.1.1 This test method determines the loose or unsettled density of hydrated lime, pulverized quicklime, and limestone. It provides for an approximate measure of the maximum volume occupied by a given weight of hydrated lime, pulverized quicklime, or limestone.

17.2 *Apparatus:*

17.2.1 *Flour Sifter*—A 114 to 127 mm (4½ to 5 in.) kitchen-type flour sifter of either the squeeze handle type or the hand crank type. It shall be able to hold at least 300 g of hydrated lime or 500 g of limestone or quicklime. The wire mesh openings should be between 0.8 and 1.5 mm.

17.2.2 *Density Cup*, 400 mL cylindrical cup as described in the Apparatus Section of Test Method C 185.

17.2.3 *Balance*, suitable for weighing at least 800 g accurately to 0.1 g.

17.2.4 *Clock or Watch.*

17.2.5 *Straight Edge.*

17.3 *Procedure:*

17.3.1 Weigh the empty density cup to the nearest 0.1 g on a balance. Place the tared cup on a solid table with a suitable mat inserted underneath the cup to collect excess sample spilling over the cup. Fill the flour sifter with more than enough material to fill the density cup. Start the clock and the sifting device to facilitate the flow of powder into the cup. Overflow the cup until there is a cone of excess material.

17.3.2 After 3 min, carefully remove the excess powder by passing the edge of a spatula blade parallel with, and in contact with, the top of the cup. Move the spatula smoothly and keep it level at all times to prevent packing or pulling the sample out of the cup.

17.3.3 After the cup is level, lightly tap it with the edge of the spatula to settle the powder. Wipe the outside of the cup with a lintless cloth or paper towel. Avoid spilling the sample while transferring the cup to the balance for weighing.

17.3.4 Weigh the cup and sample to the nearest 0.1 g and determine the weight of the sample by difference.

17.3.5 The loose density of the material is calculated and reported as grams per cubic centimetre, or as pounds per cubic foot.

17.4 *Calculation:*

17.4.1 Calculate the loose density as follows:

$$D = W/V$$

where:

D = loose density,
W = weight of sample, g, and
V = volume of cup, cm^3.

17.4.2 For reporting as pounds per cubic foot, multiply grams per cubic centimetre by 62.43.

17.5 *Precision and Bias:*

17.5.1 *Single Operator Precision*—The single operator standard deviation has been found to be 0.4 lb/ft^3 (Note 11). Therefore, results of two properly conducted tests by the same operator on the same material should not differ by more than 1.13 lb/ft^3.

17.5.2 *Multilaboratory Precision*—The multilaboratory standard deviation has been found to be 1.26 lb/ft^3 (Note 11). Therefore, results of two properly conducted tests from two different laboratories on samples of the same material should not differ by more than 3.6 lb/ft^3.

NOTE 11—These numbers represent, respectively, the (1s) and (d2s) limits as described in Practice C 670.

17.5.3 The above precision statements are based on a multilaboratory testing program for determination of the loose bulk density of hydrated lime. No statement is made regarding the precision of this method as it relates to other materials. Due to a lack of a recognized industry standard, the bias of this test method has not been determined.

18. Apparent Packed Density of Hydrated Lime, Pulverized Quicklime, and Limestone

18.1 Significance and Use:

18.1.1 This test method determines the packed or settled density of hydrated lime, pulverized quicklime, and limestone. It provides for determining the minimum volume occupied by a given weight of hydrated lime, pulverized quicklime or limestone.

18.2 *Apparatus:*

18.2.1 *Graduated Cylinder*, 100 mL capacity.

18.2.2 *Balance*, accurate to 0.1 g.

18.3 *Procedure:*

18.3.1 Weigh to within 0.1 g a 25 g sample of powdered material and transfer it to the graduated cylinder.

18.3.2 Allow powder to settle by gently tapping the cylinder on a desk top cushioned with a thick magazine or writing tablet so that compaction occurs without fluffing.

18.3.3 Record the volume of the lime after each 100 taps and continue tapping until compaction volume change is less than 0.5 mL/100 taps.

18.3.4 Calculate the density in grams per cubic centimetre or in pounds per cubic foot to the nearest pound.

18.4 *Calculation:*

18.4.1 Calculate the packed density as follows:

$$D = W/V$$

where:

D = packed density,
W = weight of sample, g, and
V = final volume of sample, cm^3.

18.4.2 For reporting as pounds per cubic foot, multiply

grams per cubic centimetre by 62.43.

18.5 *Precision and Bias:*

18.5.1 *Single Operator Precision*—The single operator standard deviation has been found to be 0.5 lb/ft^3 (Note 11). Therefore, results of two properly conducted tests by the same operator on the same material should not differ by more than 1.4 lb/ft^3.

18.5.2 *Multilaboratory Precision*—The multilaboratory standard deviation has been found to be 1.7 lb/ft^3 (Note 11). Therefore, results of two properly conducted tests from two different laboratories on samples of the same material should not differ by more than 4.8 lb/ft^3.

18.5.3 The above precision statements are based on a multilaboratory testing program for determination of the packed bulk density of hydrated lime. No statement is made regarding the precision of this method as it relates to other materials. Due to a lack of a recognized industry standard, the bias of this test method has not been determined.

19. Fineness of Pulverized Quicklime and Hydrated Lime by Air Permeability

19.1 *Significance and Use:*

19.1.1 This test method covers the determination of fineness of pulverized quicklime and hydrated lime using the Blaine air permeability apparatus described in Test Method C 204. Fineness in terms of surface area shall be expressed as total surface area in square centimetres per gram, or square metres per kilogram.

19.1.2 This test method provides, in general, relative rather than absolute fineness values. For the complete description of the apparatus and the procedures for use, refer to Test Method C 204.

19.2 *Precision and Bias:*

19.2.1 Although precision for the test method for fineness of portland cement by air permeability apparatus has been reported in Test Method C 204, the precision of this test method has not been determined for pulverized lime and hydrated lime. When sufficient data has been obtained and analyzed, a statement of precision will be provided. In the meantime users of this test method are advised to develop their own.

20. Dry Screening of Hydrated Lime, Pulverized Quicklime, and Limestone by Air Jet Sieving

20.1 *Significance and Use:*

20.1.1 This test method uses a rotating slit nozzle to supply a stream of air directed at the backside of a test sieve, keeping the screen from "blinding." The aerated material is then pulled back through the sieve by a vacuum source.

20.1.2 The advantages of dry screening by air jet sieving are twofold. The material being tested is less likely to "blind" the screen because of the recurring counterflow of an air stream to the back of the sieve. Also, dry screening avoids the error introduced by the interaction of the test material with soluble liquid media.

20.1.3 This test method is suitable for screening material from a nominal 300 µm (50 mesh) in size to 20 µm (635 mesh).

NOTE 12—Blinding of the sieves can occur at various sizes depending on the materials being sieved. Experience has shown 45 µm (325 mesh) to be the lower limit with some hydrates. Other hydrates and pulverized quicklime may be sieved to 32 µm (450 mesh). Limestone can be sieved to 20 µm (635 mesh).

20.2 *Apparatus:*

20.2.1 *An Enclosed Device*, capable of creating a vacuum on the backside of a sieve causing a rotating slit nozzle to supply an air stream perpendicular to the bottom of the sieve. The purpose is to suspend all material on the sieve by the air stream on a rotating basis.[18]

20.2.2 *Balance*, suitable for weighing accurately to 0.01 g.

NOTE 13—Selection of balance with regard to accuracy is dependent on the sample size chosen and residue retained and must be consistent with the accuracy required. Therefore, a balance weighing accurately to 0.001 g may be desired.

20.2.3 *Brush*, soft bristle.

20.2.4 *Sieve Cover*—A hard plastic transparent cover used to create a vacuum on the sieve.

20.2.5 *Test Sieves*—The sieves shall be constructed using a woven wire, either brass or stainless steel, mounted on a substantial frame. Electroformed sieves should not be used because blinding and cleaning problems make them impractical to use. The sieves shall be approximately 8 in. in diameter and conform to Specification E 11. A flexible collar must be used to ensure an air tight fit between the sieve and the device.

20.3 *Procedure:*

20.3.1 After placing the appropriate sieve into position, weigh (to the nearest 0.01 g) a sample of the test material and place it on the sieve.

NOTE 14—The amount of sample and duration of sieving are dependent upon the type of material and gradation and therefore should be adapted to individual conditions. Generally, the larger the sample size, the more representative of the material tested and the less significant are errors of technique, therefore, the results are the more exact. Sample weights can vary from 20 g for material finer than 40 µm up to 50 g for larger, heavier materials.

20.3.2 Place cover on sieve, set timer to 6 min and start vacuum (maintain vacuum according to manufacturer's recommendation). Any material clinging to the cover or edge of the sieve can be removed by light tapping with a mallet or similar device (see Note 14). If agglomerations form, they can be broken apart with a soft bristle brush.

NOTE 15—Static electrical charges can often develop on the cover (if it is made of plastic) causing it to hold a heavy film of the material being sieved. If tapping will not loosen the material, a static face sheet[19] may be used to wipe the cover surface before starting the test.

20.3.3 After screening, clean the sieve with a fine bristle brush being careful not to damage the mesh and then weigh the residue to the nearest 0.01 g.

20.4 *Calculation:*

20.4.1 Calculate percent passing as follows:

$$[(S - R)/S] \times 100 = \text{percent passing}$$

[18] The apparatus describes commercially available units sold by the Alpine American Corporation of Natick, Massachusetts. Although the description of the apparatus is directed toward this commercially available equipment, it does not restrict the use of other equivalent equipment which may be available or may be constructed, as long as it follows the general principles outlined under the summary of this test method.

[19] Commercially available.

re:
= sample weight, g. and
R = weight of sieve residue, g.

20.5 *Precision and Bias:*

20.5.1 There are as yet insufficient analyzed data to permit preparation of a precision and bias statement for this test method.

21. Limestone Grindability Determination by the Laboratory Ball Mill Method

21.1 *Scope:*

21.1.1 This test method is used to determine the relative grindability or ease of pulverization of limestones of differing hardness and to report this as a grindability index.

21.1.2 This test method is applicable to all types of limestone.

21.2 *Summary of Test Method:*

21.2.1 Limestone of a specified size range is wet ground in a ball mill therein receiving a specified amount of grinding energy. The amount of minus 75-µm (200-mesh) limestone produced is measured by wet sieving and reported as the percent passing 75-µm (200-mesh) after 5000 revolutions. This is the grindability index.

21.3 *Significance and Use:*

21.3.1 This test method is useful for comparison and acceptance testing of limestone for applications where fine ground limestone is desired.

21.4 *Apparatus:*

21.4.1 *Jar Mill,*[20] operated at 110 ± 10 r/min.

21.4.2 *Mill Jar,*[21] ceramic 14 cm (5½ in.) diameter by 17.2 cm (6¾ in.) high.

21.4.3 *Grinding Media,* 160 ± 1 g total, consisting of seven ceramic 21 by 21 mm (13/16 by 13/16 in.) cylindrical grinding media[22] (about 23 g each).

21.4.4 The sieves used shall conform to the requirements of Specification E 11.

21.4.5 Weights and weighing devices, shall conform to the requirements of Specification C 1005.

21.4.6 *Drying Oven,* capable of maintaining 100°C.

21.4.7 *A Chipmunk Crusher,*[23] capable of breaking large rocks to less than 6.35 mm (¼ in.).

21.4.8 *Riffle Sample Splitter,*[24] open pan, 12.7 mm (½ in.) chute width.

21.4.9 *Stopwatch.*

21.5 *Reagents and Materials:*

21.5.1 *Milling Solution,* a 0.1 % solution of acrylate based dispersant.[25] The dispersant chosen should not increase the solubility of limestone in water.[26]

21.6 *Sampling:*

21.6.1 Sample in accordance with Practice D 75.

21.6.2 Reduce the sample in accordance with Practice C 702 and prepare by sieving out the material that passes a 850-µm (No. 20) sieve[27] and is retained on a 425-µm (No. 40) sieve.[27]

21.7 *Procedure:*

21.7.1 Weigh seven grinding media, make adjustments (by substitutions or filing) to bring total weight to 160 g ± 1 g.

21.7.2 If the jar mill has provision for automatic shut-off, set it for 5000 revolutions, otherwise determine the mill r/min by counting the revolutions in an accurately timed period (using stopwatch) and then calculate the exact time required for 5000 revolutions.

21.7.3 Weigh out 20 ± 0.01 g of dried 20 by 40 mesh limestone. Record actual weight as $W1$.

21.7.4 Add 180 mL of milling solution to clean and empty mill jar.

21.7.5 Add the seven grinding media and quantitatively transfer the limestone sample to the mill jar and secure the top.

21.7.6 Place the mill jar on the mill rollers and operate the mill for the exact time required to make 5000 revolutions.

21.7.7 Quantitatively transfer the limestone slurry from the jar mill by rinsing the entire contents onto a coarse sieve (for example, 3.35 mm (No. 6)) and an underlying 75-µm (No. 200) sieve. Rinse the media and coarse sieve and separate the sieves.

21.7.8 Wet sieve the sample remaining on the 75-µm (No. 200) sieve to remove the finer material.

21.7.9 Dry and weigh the residue from the 75-µm (No. 200) sieve and record as $W2$ (to the nearest 0.01 g).

21.8 *Calculation:*

21.8.1 Calculate the grindability index (GI) as follows:

$$GI = (W1 - W2)/W1 \times 100$$

21.9 *Precision and Bias:*

21.9.1 The precision and bias of this test method has not been determined at this time.

[20] U.S. Stoneware No. 753-RM rotating mill, or equivalent, has been found satisfactory for this purpose.

[21] U.S. Stoneware mill jar No. 774-B-00, or equivalent, has been found satisfactory for this purpose.

[22] U.S. Stoneware burundum 13/16 in. grinding media, or equivalent, has been found satisfactory for this purpose.

[23] Bico-Braun Crusher (jaw, chipmunk) Model No. 241-34, or equivalent, has been found satisfactory for this purpose.

[24] Curtis Matheson Scientific Model No. 095-851, or equivalent, has been found satisfactory for this purpose.

[25] Alcosperse 149 from Alco Chemical Corp., or equivalent, has been found satisfactory for this purpose.

[26] Distilled or deionized water should be used for milling solution or solubility tests.

[27] U.S. Standard Sieves 6, 20, 40 and 200 mesh sizes; 20.3 cm (8 in.) diameter by 5 cm (2 in.) depth with stainless steel wire cloth.

The American Society for Testing and Materials takes no position respecting the validity of any patent rights asserted in connection with any item mentioned in this standard. Users of this standard are expressly advised that determination of the validity of any such patent rights, and the risk of infringement of such rights, are entirely their own responsibility.

This standard is subject to revision at any time by the responsible technical committee and must be reviewed every five years and if not revised, either reapproved or withdrawn. Your comments are invited either for revision of this standard or for additional standards and should be addressed to ASTM Headquarters. Your comments will receive careful consideration at a meeting of the responsible technical committee, which you may attend. If you feel that your comments have not received a fair hearing you should make your views known to the ASTM Committee on Standards, 1916 Race St., Philadelphia, PA 19103.

Standard Specification for Portland Cement[1]

This standard is issued under the fixed designation C 150; the number immediately following the designation indicates the year of original adoption or, in the case of revision, the year of last revision. A number in parentheses indicates the year of last reapproval. A superscript epsilon (ε) indicates an editorial change since the last revision or reapproval.

This standard has been approved for use by agencies of the Department of Defense. Consult the DoD Index of Specifications and Standards for the specific year of issue which has been adopted by the Department of Defense.

1. Scope

1.1 This specification covers eight types of portland cement, as follows (see Note):

1.1.1 *Type I*—For use when the special properties specified for any other type are not required.

1.1.2 *Type IA*—Air-entraining cement for the same uses as Type I, where air-entrainment is desired.

1.1.3 *Type II*—For general use, more especially when moderate sulfate resistance or moderate heat of hydration is desired.

1.1.4 *Type IIA*—Air-entraining cement for the same uses as Type II, where air-entrainment is desired.

1.1.5 *Type III*—For use when high early strength is desired.

1.1.6 *Type IIIA*—Air-entraining cement for the same use as Type III, where air-entrainment is desired.

1.1.7 *Type IV*—For use when a low heat of hydration is desired.

1.1.8 *Type V*—For use when high sulfate resistance is desired.

1.2 The values stated in inch-pound units are to be regarded as the standard.

2. Referenced Documents

2.1 *ASTM Standards:*

C 33 Specification for Concrete Aggregates[2]

C 109 Test Method for Compressive Strength of Hydraulic Cement Mortars (Using 2-in. or 50-mm Cube Specimens)[3]

C 114 Test Methods for Chemical Analysis of Hydraulic Cement[3]

C 115 Test Method for Fineness of Portland Cement by the Turbidimeter[3]

C 151 Test Method for Autoclave Expansion of Portland Cement[3]

C 183 Practice for Sampling and the Amount of Testing of Hydraulic Cement[3]

C 185 Test Method for Air Content of Hydraulic Cement Mortar[3]

C 186 Test Method for Heat of Hydration of Hydraulic Cement[3]

C 191 Test Method for Time of Setting of Hydraulic Cement by Vicat Needle[3]

C 204 Test Method for Fineness of Portland Cement by Air Permeability Apparatus[3]

C 226 Specification for Air-Entraining Additions for Use in the Manufacture of Air-Entraining Portland Cement[3]

C 266 Test Method for Time of Setting of Hydraulic Cement Paste by Gillmore Needles[3]

C 451 Test Method for Early Stiffening of Portland Cement (Paste Method)[3]

C 452 Test Method for Potential Expansion of Portland Cement Mortars Exposed to Sulfate[3]

C 465 Specification for Processing Additions for Use in the Manufacture of Hydraulic Cements[3]

C 563 Test Method for Optimum SO_3 in Portland Cement[3]

C 1038 Test Method for Expansion of Portland Cement Mortar Bars Stored in Water[3]

3. Terminology

3.1 *Definitions:*

3.1.1 *portland cement*—a hydraulic cement produced by pulverizing clinker consisting essentially of hydraulic calcium silicates, usually containing one or more of the forms of calcium sulfate as an interground addition.

3.1.2 *air-entraining portland cement*—a hydraulic cement produced by pulverizing clinker consisting essentially of hydraulic calcium silicates, usually containing one or more of the forms of calcium sulfate as an interground addition, and with which there has been interground an air-entraining addition.

4. Ordering Information

4.1 Orders for material under this specification shall include the following:

4.1.1 This specification number and date,

4.1.2 Type or types allowable. If no type is specified, Type I shall be supplied,

4.1.3 Any optional chemical requirements from Table 2, if desired,

4.1.4 Type of setting-time test required, Vicat or Gillmore. If not specified, the Vicat shall be used,

4.1.5 Any optional physical requirements from Table 4, if desired.

NOTE—Attention is called to the fact that cements conforming requirements for all types may not be carried in stock in some a advance of specifying the use of other than Type I cement, it sho determined whether the proposed type of cement is or can be made available.

[1] This specification is under the jurisdiction of ASTM Committee C-1 on Cement and is the direct responsibility of Subcommittee C01.10 on Portland Cement.

Current edition approved March 15, 1992. Published May 1992. Originally published as C 150 – 40 T. Last previous edition C 150 – 89.

[2] *Annual Book of ASTM Standards*, Vol 04.02.

[3] *Annual Book of ASTM Standards*, Vol 04.01.

000233

TABLE 1 Standard Chemical Requirements

Cement Type [A]	I and IA	II and IIA	III and IIIA	IV	V
n dioxide (SiO_2), min, %	...	20.0	...	...	...
Aluminum oxide (Al_2O_3), max, %	...	6.0	...	...	...
Ferric oxide (Fe_2O_3), max, %	...	6.0	...	6.5	...
Magnesium oxide (MgO), max, %	6.0	6.0	6.0	6.0	6.0
Sulfur trioxide (SO_3), [B] max, %					
When $(C_3A)^C$ is 8 % or less	3.0	3.0	3.5	2.3	2.3
When $(C_3A)^C$ is more than 8 %	3.5	[D]	4.5	[D]	[D]
Loss on ignition, max, %	3.0	3.0	3.0	2.5	3.0
Insoluble residue, max, %	0.75	0.75	0.75	0.75	0.75
Tricalcium silicate $(C_3S)^C$ max, %	...	...	...	35[E]	...
Dicalcium silicate $(C_2S)^C$ min, %	...	...	...	40[E]	...
Tricalcium aluminate $(C_3A)^C$ max, %	...	8	15	7[E]	5[F]
Tetracalcium aluminoferrite plus twice the tricalcium aluminate [C] ($C_4AF + 2(C_3A)$), or solid solution ($C_4AF + C_2F$), as applicable, max, %	...	...	...	...	25[F]

[A] See Note.

[B] There are cases where optimum SO_3 (using Test Method C 563) for a particular cement is close to or in excess of the limit in this specification. In such cases where properties of a cement can be improved by exceeding the SO_3 limits stated in this table, it is permissible to exceed the values in the table, provided it has been demonstrated by Test Method C 1038 that the cement with the increased SO_3 will not develop expansion in water exceeding 0.020 % at 14 days. When the manufacturer supplies cement under this provision, he shall, upon request, supply supporting data to the purchaser.

[C] The expressing of chemical limitations by means of calculated assumed compounds does not necessarily mean that the oxides are actually or entirely present as such compounds.

When expressing compounds, C = CaO, S = SiO_2, A = Al_2O_3, F = Fe_2O_3. For example, $C_3A = 3CaO \cdot Al_2O_3$.

Titanium dioxide and phosphorus pentoxide (TiO_2 and P_2O_5) shall be included with the Al_2O_3 content. The value historically and traditionally used for Al_2O_3 in calculating potential compounds for specification purposes is the ammonium hydroxide group minus ferric oxide ($R_2O_3 - Fe_2O_3$) as obtained by classical wet chemical methods. This procedure includes as Al_2O_3 the TiO_2, P_2O_5 and other trace oxides which precipitate with the ammonium hydroxide group in the classical wet chemical methods. Many modern instrumental methods of cement analysis determine aluminum or aluminum oxide directly without the minor and trace oxides included by the classical method. Consequently, for consistency and to provide comparability with historic data and among various analytical methods, when calculating potential compounds for specification purposes, those using methods which determine Al or Al_2O_3 directly should add to the determined Al_2O_3 weight quantities of P_2O_5, TiO_2 and any other oxide except Fe_2O_3 which would precipitate with the ammonium hydroxide group when analyzed by the classical method and which is present in an amount of 0.05 weight % or greater. The weight percent of minor or trace oxides to be added to Al_2O_3 by those using direct methods may be obtained by actual analysis of those oxides in the sample being tested or estimated from historical data on those oxides on cements from the same source, provided that the estimated values are identified as such.

When the ratio of percentages of aluminum oxide to ferric oxide is 0.64 or more, the percentages of tricalcium silicate, dicalcium silicate, tricalcium aluminate, and tetracalcium aluminoferrite shall be calculated from the chemical analysis as follows:

Tricalcium silicate = $(4.071 \times \% CaO) - (7.600 \times \% SiO_2) - (6.718 \times \% Al_2O_3) - (1.430 \times \% Fe_2O_3) - (2.852 \times \% SO_3)$

Dicalcium silicate = $(2.867 \times \% SiO_2) - (0.7544 \times \% C_3S)$

Tricalcium aluminate = $(2.650 \times \% Al_2O_3) - (1.692 \times \% Fe_2O_3)$

Tetracalcium aluminoferrite = $3.043 \times \% Fe_2O_3$

When the alumina-ferric oxide ratio is less than 0.64, a calcium aluminoferrite solid solution (expressed as $ss(C_4AF + C_2F)$) is formed. Contents of this solid solution and of tricalcium silicate shall be calculated by the following formulas:

$ss(C_4AF + C_2F) = (2.100 \times \% Al_2O_3) + (1.702 \times \% Fe_2O_3)$

Tricalcium silicate = $(4.071 \times \% CaO) - (7.600 \times \% SiO_2) - (4.479 \times \% Al_2O_3) - (2.859 \times \% Fe_2O_3) - (2.852 \times \% SO_3)$.

No tricalcium aluminate will be present in cements of this composition. Dicalcium silicate shall be calculated as previously shown.

In the calculation of all compounds the oxides determined to the nearest 0.1 % shall be used.

All values calculated as described in this note shall be reported to the nearest 1 %.

[D] Not applicable.

[E] Does not apply when the heat of hydration limit in Table 4 is specified.

[F] Does not apply when the sulfate resistance limit in Table 4 is specified.

5. Additions

5.1 The cement covered by this specification shall contain no addition except as follows:

5.1.1 Water or calcium sulfate, or both, may be added in amounts such that the limits shown in Table 1 for sulfur trioxide and loss-on-ignition shall not be exceeded.

5.1.2 At the option of the manufacturer, processing additions may be used in the manufacture of the cement, provided such materials in the amounts used have been shown to meet the requirements of Specification C 465.

5.1.3 Air-entraining portland cement shall contain an interground addition conforming to the requirements of Specification C 226.

6. Chemical Composition

6.1 Portland cement of each of the eight types shown in Section 1 shall conform to the respective standard chemical requirements prescribed in Table 1. In addition, optional chemical requirements are shown in Table 2.

7. Physical Properties

7.1 Portland cement of each of the eight types shown in Section 1 shall conform to the respective standard physical requirements prescribed in Table 3. In addition, optional physical requirements are shown in Table 4.

8. Sampling

8.1 When the purchaser desires that the cement be sampled and tested to verify compliance with this specification, sampling and testing should be performed in accordance with Practice C 183.

8.2 Practice C 183 is not designed for manufacturing quality control and are not required for manufacturer's certification.

9. Test Methods

9.1 Determine the applicable properties enumerated in this specification in accordance with the following test methods:

9.1.1 *Air Content of Mortar*—Test Method C 185.

090234

TABLE 2 Optional Chemical Requirements[A]

Cement Type	I and IA	II and IIA	III and IIIA	IV	V	Remarks
Tricalcium aluminate (C_3A),[B] max, %	...	...	8	...	...	for moderate sulfate [illegible]
Tricalcium aluminate (C_3A),[B] max, %	...	...	5	...	...	for high sulfate re[illegible]
Sum of tricalcium silicate and tricalcium aluminate,[B] max, %	...	58[C]	...	...	...	for moderate heat [illegible]
Alkalies ($Na_2O + 0.658K_2O$), max, %	0.60[D]	0.60[D]	0.60[D]	0.60[D]	0.60[D]	low-alkali cement

[A] These optional requirements apply only if specifically requested. Availability should be verified. See note in Section 4.

[B] The expressing of chemical limitations by means of calculated assumed compounds does not necessarily mean that the oxides are actually or entirely present as su compounds.

When expressing compounds, C = CaO, S = SiO_2, A = Al_2O_3, F = Fe_2O_3. For example, C_3A = 3CaO·Al_2O_3.

Titanium dioxide and phosphorus pentoxide (TiO_2 and P_2O_5) shall be included with the Al_2O_3 content. The value historically and traditionally used for Al_2O_3 in calculatir potential compounds for specification purposes is the ammonium hydroxide group minus ferric oxide ($R_2O_3 - Fe_2O_3$) as obtained by classical wet chemical methods. Th procedure includes as Al_2O_3 the TiO_2, P_2O_5 and other trace oxides which precipitate with the ammonium hydroxide group in the classical wet chemical methods. Mar modern instrumental methods of cement analysis determine aluminum or aluminum oxide directly without the minor and trace oxides included by the classical metho Consequently, for consistency and to provide comparability with historic data and among various analytical methods, when calculating potential compounds fc specification purposes, those using methods which determine Al or Al_2O_3 directly should add to the determined Al_2O_3 weight quantities of P_2O_5, TiO_2 and any other oxic except Fe_2O_3 which would precipitate with the ammonium hydroxide group when analyzed by the classical method and which is present in an amount of 0.05 weight % c greater. The weight percent of minor or trace oxides to be added to Al_2O_3 by those using direct methods may be obtained by actual analysis of those oxides in the sampl being tested or estimated from historical data on those oxides on cements from the same source, provided that the estimated values are identified as such.

When the ratio of percentages of aluminum oxide to ferric oxide is 0.64 or more, the percentages of tricalcium silicate, dicalcium silicate, tricalcium aluminate an tetracalcium aluminoferrite shall be calculated from the chemical analysis as follows:

Tricalcium silicate = (4.071 × % CaO) − (7.600 × % SiO_2) − (6.718 × % Al_2O_3) − (1.430 × % Fe_2O_3) − (2.852 × % SO_3)

Dicalcium silicate = (2.867 × % SiO_2) − (0.7544 × % C_3S)

Tricalcium aluminate = (2.650 × % Al_2O_3) − (1.692 × % Fe_2O_3)

Tetracalcium aluminoferrite = 3.043 × % Fe_2O_3

When the alumina-ferric oxide ratio is less than 0.64, a calcium aluminoferrite solid solution (expressed as ss ($C_4AF + C_2F$)) is formed. Contents of this solid solution anc of tricalcium silicate shall be calculated by the following formulas:

ss($C_4AF + C_2F$) = (2.100 × % Al_2O_3) + (1.702 × % Fe_2O_3)

Tricalcium silicate = (4.071 × % CaO) − (7.600 × % SiO_2) − (4.479 × % Al_2O_3) − (2.859 × % Fe_2O_3) − (2.852 × % SO_3).

No tricalcium aluminate will be present in cements of this composition. Dicalcium silicate shall be calculated as previously shown.

In the calculation of all compounds the oxides determined to the nearest 0.1 % shall be used.

All values calculated as described in this note shall be reported to the nearest 1 %.

[C] The optional limit for heat of hydration in Table 4 shall not be requested when this optional limit is requested.

[D] This limit may be specified when the cement is to be used in concrete with aggregates that may be deleteriously reactive. Reference should be made to Specificatior C 33 for suitable criteria of deleterious reactivity.

9.1.2 *Chemical Analysis*—Test Methods C 114.

9.1.3 *Strength*—Test Method C 109.

9.1.4 *False Set*—Test Method C 451.

9.1.5 *Fineness by Air Permeability*—Test Method C 204.

9.1.6 *Fineness by Turbidimeter*—Test Method C 115.

9.1.7 *Heat of Hydration*—Test Method C 186.

9.1.8 *Autoclave Expansion*—Test Method C 151.

9.1.9 *Time of Setting by Gillmore Needles*—Test Method C 266.

9.1.10 *Time of Setting by Vicat Needles*—Test Method C 191.

9.1.11 *Sulfate Resistance*—Test Method C 452 (sulfate expansion).

9.1.12 *Calcium Sulfate (expansion of) Mortar*—Test Method C 1038.

9.1.13 *Optimum SO_3*—Test Method C 563.

10. Inspection

10.1 Inspection of the material shall be made as agreed upon by the purchaser and the seller as part of the purchase contract.

11. Rejection

11.1 The cement may be rejected if it fails to meet any of the requirements of this specification.

11.2 Cement remaining in bulk storage at the mill, prior to shipment, for more than 6 months, or cement in bags in local storage in the hands of a vendor for more than 3 months, after completion of tests, may be retested before use and may be rejected if it fails to conform to any of the requirements of this specification.

11.3 Packages shall identify the weight as ne[illegible]t. Packages more than 2 % below the weight marked thereon may be rejected; and if the average weight of packages in any shipment, as shown by weighing 50 packages taken at random, is less than that marked on the packages, the entire shipment may be rejected.

12. Manufacturer's Statement

12.1 At the request of the purchaser, the manufacturer shall state in writing the nature, amount, and identity of the air-entraining agent used, and of any processing addition that may have been used, and also, if requested, shall supply test data showing compliance of such air-entraining addition with the provisions of Specification C 226, and of any such processing addition with Specification C 465.

13. Packaging and Package Marking

13.1 When the cement is delivered in packages, the words "Portland Cement," the type of cement, the name and brand of the manufacturer, and the weight of the cement contained therein shall be plainly marked on each package. When the cement is an air-entraining type, the words "air-entraining" shall be plainly marked on each package. Similar information shall be provided in the shipping documents accompanying the shipment of packaged or bulk ceme[illegible]l packages shall be in good condition at the time o[illegible] tion.

TABLE 3 Standard Physical Requirements

Cement Type [A]	I	IA	II	IIA	III	IIIA	IV	V
Air content of mortar, [B] *volume %:*								
max	12	22	12	22	12	22	12	12
min	...	16	...	16	...	16	...	...
Fineness, [C] specific surface, m^2/kg (alternative methods):								
Turbidimeter test, min	160	160	160	160	...	...	160	160
Air permeability test, min	280	280	280	280	...	...	280	280
Autoclave expansion, max, %	0.80	0.80	0.80	0.80	0.80	0.80	0.80	0.80
Strength, not less than the values shown for the ages indicated below: [D]								
Compressive strength, psi (MPa):								
1 day	...	...	...	...	1800 (12.4)	1450 (10.0)	...	...
3 days	1800 (12.4)	1450 (10.0)	1500 (10.3) 1000 [F] (6.9) [F]	1200 (8.3) 800 [F] (5.5) [F]	3500 (24.1)	2800 (19.3)	...	1200 (8.3)
7 days	2800 (19.3)	2250 (15.5)	2500 (17.2) 1700 [F] (11.7) [F]	2000 (13.8) 1350 [F] (9.3) [F]	...	...	1000 (6.9)	2200 (15.2)
28 days	...	...	...	...	...	...	2500 (17.2)	3000 (20.7)
Time of setting (alternative methods): [E]								
Gillmore test:								
Initial set, min, not less than	60	60	60	60	60	60	60	60
Final set, min, not more than	600	600	600	600	600	600	600	600
Vicat test: [G]								
Time of setting, min, not less than	45	45	45	45	45	45	45	45
Time of setting, min, not more than	375	375	375	375	375	375	375	375

[A] See Note.
[B] Compliance with the requirements of this specification does not necessarily ensure that the desired air content will be obtained in concrete.
[C] Either of the two alternative fineness methods may be used at the option of the testing laboratory. However, when the sample fails to meet the requirements of the permeability test, the turbidimeter test shall be used, and the requirements in this table for the turbidimetric method shall govern.
[D] The strength at any specified test age shall be not less than that attained at any previous specified test age.
[E] The purchaser should specify the type of setting-time test required. In case he does not so specify, the requirements of the Vicat test only shall govern.
[F] When the optional heat of hydration or the chemical limit on the sum of the tricalcium silicate and tricalcium aluminate is specified.
[G] The time of setting is that described as initial setting time in Test Method C 191.

TABLE 4 Optional Physical Requirements [A]

Cement Type	I	IA	II	IIA	III	IIIA	IV	V
False set, final penetration, min, %	50	50	50	50	50	50	50	50
Heat of hydration:								
7 days, max, cal/g (kJ/kg)	...	...	70 (290) [B]	70 (290) [B]	...	...	60 [C] (250)	...
28 days, max, cal/g (kJ/kg)	...	...	...	...	...	...	70 [C] (290)	...
Strength, not less than the values shown:								
Compressive strength, psi (MPa)								
28 days	4000 (27.6)	3200 (22.1)	4000 (27.6) 3200 [B] (22.1) [B]	3200 (22.1) 2560 [B] (17.7) [B]	...	...	...	...
Sulfate resistance, [D] 14 days, max, % expansion	...	...	...	...	...	...	...	0.040

[A] These optional requirements apply only if specifically requested. Availability should be verified. See Note in Section 4.
[B] The optional limit for the sum of the tricalcium silicate and tricalcium aluminate in Table 2 shall not be requested when this optional limit is requested. These strength requirements apply when either heat of hydration or the sum of tricalcium silicate and tricalcium aluminate requirements are requested.
[C] When the heat of hydration limit is specified, it shall be instead of the limits of C3S, C2S, and C3A listed in Table 1.
[D] When the sulfate resistance is specified, it shall be instead of the limits of C_3A and $C_4AF + 2\ C_3A$ listed in Table 1.

4. Storage

14.1 The cement shall be stored in such a manner as to permit easy access for proper inspection and identification of each shipment, and in a suitable weather-tight building that will protect the cement from dampness and minimize warehouse set.

15. Manufacturer's Certification

15.1 Upon request of the purchaser in the contract or order, a manufacturer's report shall be furnished at the time of shipment stating the results of tests made on samples of the material taken during production or transfer and certifying that the cement conforms to applicable requirements of this specification.

000236

The American Society for Testing and Materials takes no position respecting the validity of any patent rights asserted in connection with any item mentioned in this standard. Users of this standard are expressly advised that determination of the validity of any such patent rights, and the risk of infringement of such rights, are entirely their own responsibility.

This standard is subject to revision at any time by the responsible technical committee and must be reviewed every five years and if not revised, either reapproved or withdrawn. Your comments are invited either for revision of this standard or for additional standards and should be addressed to ASTM Headquarters. Your comments will receive careful consideration at a meeting of the responsible technical committee, which you may attend. If you feel that your comments have not received a fair hearing you should make your views known to the ASTM Committee on Standards, 1916 Race St., Philadelphia, PA 19103.

(13) Herndon, Joe, and Smith, Dwight K., "Settling Downhole Plugs: A State-of-the-Art," *Petroleum Engineer International*, Vol 50, No. 4, April 1978, p. 56.

(14) Smith, D. K., Cementing, "Society of Petroleum Engineers Monograp Series," Vol 4, *Society of Petroleum Engineers of AIME*, 1976.

(15) U.S. EPA, "Construction Requirements for Wells Authorized by Rule," 40 CRF 147.2912b(1), (*Subpart GGG, Osage Mineral Reserve, Class II Wells*), 1988.

(16) Portland Cement Association; *Design and Control of Concrete Mixtures*, Skokie, IL, 1979.

The American Society for Testing and Materials takes no position respecting the validity of any patent rights asserted in connection with any item mentioned in this standard. Users of this standard are expressly advised that determination of the validity of any such patent rights, and the risk of infringement of such rights, are entirely their own responsibility.

This standard is subject to revision at any time by the responsible technical committee and must be reviewed every five years and if not revised, either reapproved or withdrawn. Your comments are invited either for revision of this standard or for additional standards and should be addressed to ASTM Headquarters. Your comments will receive careful consideration at a meeting of the responsible technical committee, which you may attend. If you feel that your comments have not received a fair hearing you should make your views known to the ASTM Committee on Standards, 1916 Race St., Philadelphia, PA 19103.

Standard Guide for Investigating and Sampling Soil and Rock[1]

This standard is issued under the fixed designation D 420; the number immediately following the designation indicates the year of original adoption or, in the case of revision, the year of last revision. A number in parentheses indicates the year of last reapproval. A superscript epsilon (ε) indicates an editorial change since the last revision or reapproval.

INTRODUCTION

Investigation, sampling, and identification of subsurface materials involve complex techniques accomplished by many different procedures and interpretations. These are frequently site specific and are influenced by geological and geographical conditions; purpose of the investigation; design requirements; and the background, training, and experience of the investigator.

This guide for soil, rock, and ground water investigation and sampling, based on standard procedures, will lessen inconsistency and will encourage rational methods of site evaluation. An acceptable and consistent investigation and sampling program will help to determine the influence of geologic and geographic environment on subsurface conditions.

1. Scope

1.1 This guide identifies recognized methods by which soil, rock, and ground water conditions may be determined. The objective of the investigation should be to identify and locate, both horizontally and vertically, significant soil and rock types and ground water conditions present within a given site area and to establish the characteristics of the subsurface materials by sampling and in situ testing. Laboratory testing of soil and rock samples is governed by other ASTM standards.

1.2 *Key Words:*

1.2.1 *Site Investigations (see Practice D 3584):*

UF Reconnaissance Surveys
- Subsurface Investigations
- Geological Investigations
- Field Investigations

BT Explorations
- Feasibility Studies

NT *Hydrologic Investigations*
- Foundation Investigations
- Geophysical Investigation

RT Soil Surveys
- Maps
- Preliminary Investigations
- Sampling

1.3 The values stated in inch-pound units are to be regarded as the standard.

2. Referenced Documents

2.1 *ASTM Standards:*

C 119 Definitions of Terms Relating to Dimension Stone[2]

C 294 Descriptive Nomenclature of Constituents of Natural Mineral Aggregates[3]

C 851 Practice for Estimating Scratch Hardness of Coarse Aggregate Particles[3]

D 75 Practice for Sampling Aggregates[2]

D 653 Terminology Relating to Soil, Rock, and Contained Fluids[2]

D 1194 Test Method for Bearing Capacity of Soil for Static Load on Spread Footings[2]

D 1452 Practice for Soil Investigation and Sampling by Auger Borings[2]

D 1586 Method for Penetration Test and Split-Barrel Sampling of Soils[2]

D 1587 Practice for Thin-Walled Tube Sampling of Soils[2]

D 2113 Practice for Diamond Core Drilling for Site Investigation[2]

D 2487 Test Method for Classification of Soils for Engineering Purposes[2]

D 2488 Practice for Description and Identification of Soils (Visual-Manual Procedure)[2]

D 2573 Test Method for Field Vane Shear Test in Cohesive Soil[2]

D 2607 Classification of Peats, Mosses, Humus, and Related Products[2]

D 2937 Test Method for Density of Soil In Place by the Drive-Cylinder Method[2]

D 3282 Practice for Classification of Soils and Soil-Aggregate Mixtures for Highway Construction Purposes[2]

D 3385 Test Method for Infiltration Rate of Soils in Field Using Double-Ring Infiltrometers[2]

D 3397 Methods for Triaxial Classification of Base Materials, Soils, and Soil Mixtures[4]

D 3441 Test Method for Deep, Quasi-Static, Cone and Friction-Cone Penetration Tests of Soil[2]

D 3550 Practice for Ring-Lined Barrel Sampling of Soils[2]

[1] This guide is under the jurisdiction of ASTM Committee D-18 on Soil and Rock and is the direct responsibility of Subcommittee D18.01 on Surface and Subsurface Reconnaissance.

Current edition approved Aug. 19, 1987. Published October 1987. Originally published as D 420 – 65 T. Last previous edition D 420 – 69 (1979)[ε1].

[2] *Annual Book of ASTM Standards*, Vol 04.08.

[3] *Annual Book of ASTM Standards*, Vol 04.02.

[4] *Annual Book of ASTM Standards*, Vol 04.03.

000239

D 3584 Practice for Indexing Papers and Reports on Soil and Rock for Engineering Purposes[2]
D 3740 Practice for the Evaluation of Agencies Engaged in the Testing and/or Inspection of Soil and Rock as Used in Engineering Design and Construction[2]
D 4083 Practice for Description of Frozen Soils (Visual-Manual Procedure)[2]
D 4220 Practices for Preserving and Transporting Soil Samples[2]
D 4427 Classification of Peat Samples by Laboratory Testing[2]
G 51 Test Method for pH of Soil for Use in Corrosion Testing[2]
G 57 Method for Field Measurement of Soil Resistivity Using the Wenner Four-Electrode Method[2]

3. Significance and Use

3.1 An adequate soil, rock, and ground water investigation provides pertinent information for decision making on one or more of the following subjects:

3.1.1 Location of the proposed construction both vertically and horizontally.

3.1.2 Location and preliminary evaluation of suitable borrow and other local sources of construction material.

3.1.3 Need for special excavating and dewatering techniques.

3.1.4 Investigations of slope stability in natural slopes, cuts, and embankments.

3.1.5 Conceptual selection of embankment types, foundations for structures, and hydraulic barrier requirements.

3.1.6 Ground water resource planning and development of detailed investigations.

3.1.7 Identification of ground water contamination and development of detailed monitoring studies.

3.1.8 Development of additional detailed subsurface investigations for specific structures or facilities.

3.2 A subsurface soil, rock, and ground water investigation should provide sufficiently large soil and rock samples of such quality as to allow adequate testing to determine the soil or rock classification or mineralogic type, or both, and the engineering properties pertinent to the proposed design.

3.3 This guide is not meant to be an inflexible description of investigation requirements; other techniques may be applied as appropriate.

4. Apparatus

4.1 The type of equipment required for a subsurface investigation depends upon various factors including the type of subsurface material, the depth of exploration, the nature of the terrain, and the intended use of the data.

4.2 *Hand Augers, Hole Diggers, Shovels, and Push Tube Samplers*, suitable for exploration of surficial soils to depths of 3 to 9 ft (1 to 3 m).

4.3 *Earth Excavation Equipment*, such as backhoes, draglines, and drilled pier augers (screw or bucket) to allow in situ examination of soil deposits and sampling of materials containing very large particles.

5. Techniques

5.1 Geophysical or remote sensing techniques may be used for mapping of the areal extent of geological formations and for evaluating variations in soil and rock properties.

5.1.1 Satellite and aircraft spectral mapping tools, such as LANDSAT, may be used to find and map the areal extent of subsurface materials and geologic structure. Interpretation of aircraft photographs and satellite imagery may locate and identify significant geologic features that may be indicative of faults and fractures. Some ground control is generally required to verify information derived from remote sensing data. Table 13.8 of Ref. (**1**)[5] is a useful summary of remote sensing capabilities.

5.1.2 Seismic refraction/reflection and ground penetrating radar techniques may be used to map soil horizons and depth profiles, water tables, and depth to bedrock in many situations, with depth penetration and resolution varying with local conditions. Electromagnetic induction, electrical resistivity, and induced polarization (or complex resistivity) techniques may be used to map variations in water content and quality, clay horizons, stratification, and depth to aquifer/bedrock. Other geophysical techniques such as gravity and magnetic methods may be useful under certain specific conditions. Crosshole shear wave velocity measurements may provide soil and rock parameters for dynamic analyses.

5.4 Currently available ASTM standards on boring and sampling are:

5.4.1 Practice D 1452 on auger boring.
5.4.2 Method D 1586 on standard penetration test.
5.4.3 Practice D 1587 on thin walled tube sampling.
5.4.4 Practice D 2113 on diamond core drilling.
5.4.5 Test Method D 2573 on field vane shear test.
5.4.6 Test Method D 3385 on double ring infiltrometer.
5.4.7 Method D 3441 on cone penetration tests.
5.4.8 Practice D 3550 on ring-lined barrel sampling.

6. Exploration Plan

6.1 The project design and performance requirements must be established prior to final development of the exploration plan. A complete soil, rock, and ground water investigation should encompass the following activities:

6.1.1 Review of available information on the geologic history, rock, soil, and ground water conditions occurring at the proposed location and in the immediate vicinity of the site.

6.1.2 Interpretation of air-photo and other remote sensing data.

6.1.3 Field reconnaissance for identification of surficial geologic conditions, mapping of stratigraphic exposures and outcrops, and examination of the performance of existing structures.

6.1.4 On site investigation of the surface and subsurface materials by geophysical surveys, borings, or test pits.

6.1.5 Recovery of representative disturbed samples for laboratory classification tests of soil, rock, and local construction material. These should be supplemented by undisturbed specimens suitable for the determination of those engineering properties pertinent to the investigation.

6.1.6 Determination of the position of the ground water table, or water tables if there is perched or artesian ground

[5] The boldface numbers in parentheses refer to the list of references at the end of this standard.

water, and of the variability of that position in both short and long time frames.

6.1.7 Determination of the location of suitable foundation material, either bedrock or satisfactory load-bearing soils.

6.1.8 Field identification of soil and rock types with the depth of their occurrence and the locations of their structural discontinuities.

6.1.9 Evaluation of the performance of existing installations, relative to their foundation material and environment in the immediate vicinity of the proposed site.

7. Reconnaissance of Project Area

7.1 Technical data should be reviewed before any field program is started. This includes, but is not limited to, topographic maps, airphotos, satellite imagery, geologic maps, statewide or county soil surveys and mineral resource surveys, and engineering soil maps covering the proposed project area. Reports of subsurface investigations of nearby or adjacent projects should be studied.

NOTE 1—While certain of the older maps and reports may be obsolete and of limited value in the light of current knowledge, a comparison of the old with the new will often reveal valuable unexpected information.

7.1.1 The United States Geological Survey and the geological surveys of the various states are the principal sources of geologic maps and reports on mineral resources and ground water.

7.1.2 United States Department of Agriculture Soil Conservation Service soil survey reports, where available and of recent date, should enable the engineer to estimate the range in soil profile characteristics to depths of 5 or 6 ft (1.5 or 2 m) for each soil mapped.

NOTE 2—Each soil type has a distinctive soil profile due to age, parent material, relief, climatic condition, and vegetative cover. These properties can assist in identifying the various soil types, each requiring special engineering considerations and treatment. Similar engineering soil properties are often found where similar soil profile characteristics exist. Changes in soil properties in adjacent areas often indicate changes in parent material or relief.

7.2 In areas where descriptive data are limited by inadequate geologic or soils maps, the soil and rock in open cuts in the vicinity of the proposed project should be studied and various soil and rock profiles noted. Field notes of such studies should include data outlined in 8.4.

7.3 Where a preliminary map covering the area of the project is desired, it can be prepared on maps compiled from airphotos showing the ground conditions. The distribution of the predominant soil and rock deposits likely to be encountered during the investigation may be shown using data obtained from geologic maps and limited ground reconnaissance. Experienced airphoto interpreters can deduce much subsurface data from a study of black and white, color, and infrared photographs because similar soil or rock conditions, or both, usually have similar airphoto patterns in regions of similar climate or vegetation.

7.4 In areas where documentary information is insufficient, some knowledge of subsurface conditions can be obtained from land owners and local well drillers and construction people.

NOTE 3—This preliminary map may be expanded into a detailed engineering map by locating all test holes, pits, and sampling stations and by revising boundaries as determined from the detailed subsurface survey.

8. Determination of Subsurface Conditions

8.1 Subsurface conditions are positively defined only at the individual test pit, hole, boring, or open cut examined. A stratigraphic profile can be developed by detailed investigations only where determinations of a continuous relationship of the depths and locations of various types of soil and rock can be made. This phase of the investigation may be implemented by plotting logs of soil and rock exposures in walls of excavations or cut areas or by plotting logs of the test borings, or both, and then interpolating between these logs. The spacing of these investigations will depend on the geologic complexity of the project area and on the importance of soil and rock continuity to the project design. Exploration should be deep enough to identify all strata that might be significantly affected by the proposed use of the site and to develop the engineering data required to allow analysis of the items listed in Section 3 for each project.

8.2 Geophysical survey methods may be used to supplement borehole and outcrop data and to interpolate between holes. Seismic, ground penetrating radar, and electrical resistivity methods can be particularly valuable when distinct differences in the properties of contiguous subsurface materials are indicated.

8.2.1 The seismic refraction method is especially useful in determining depth to, or rippability of, rock in locations where successively denser strata are encountered.

8.2.2 The seismic reflection method is useful in [illegible]eating geological units at depths below 10 ft (3 m). It [illegible] constrained by layers of low seismic velocity and is esp[illegible] useful in areas of rapid stratigraphic change.

8.2.3 The electrical resistivity method is similarly useful in determining depth to rock and anomalies in the stratigraphic profile, in evaluating stratified formations where a denser stratum overlies a less dense stratum, and in investigation of prospective sand-gravel or other sources of borrow material. Resistivity parameters also are required for the design of grounding systems and cathodic protection for buried structures.

8.2.4 The ground penetrating radar method is useful in defining soil and rock layers and manmade structures in the depth range of 1 to 30 ft (⅓ to 10 m).

NOTE 4—Geophysical investigations can be a useful guide in determining boring or test hole locations. The interpretation of geophysical studies should be verified by borings or test excavations.

8.3 The depth of exploratory borings or test pits for roadbeds, airport paving, or vehicle parking areas should be to at least 5 ft (1.5 m) below the proposed subgrade elevation. Special circumstances may increase this depth. Borings for structures or embankments should extend below the level of significant influence of the proposed load as determined by a subsurface stress analysis.

8.3.1 When drainage may be influenced by either pervious water-bearing materials or impervious materials that can block internal drainage, borings should extend [illegible] into these materials sufficiently to determine those [illegible]neering and geologic properties relevant to the pro[illegible] design.

000211

8.3.2 In all borrow areas the borings or test pits should be sufficient in number and depth to outline the required quantities of material meeting the specified quality requirements.

8.3.3 Where frost penetration must be considered in the behavior of soil and rock, borings should extend significantly below the depth of maximum frost penetration.

8.4 Exploration records shall be kept in a systematic manner for each project. Such records shall include:

8.4.1 Description of each site or area investigated. Each test hole, boring, test pit, or geophysical test site shall be clearly located (horizontally and vertically) with reference to some established coordinate system, datum, or permanent monument.

8.4.2 Logs of each test hole, boring, test pit, or cut surface exposure in which the field description and location of each material encountered is clearly shown either by symbol or word description.

NOTE 5—Color photographs of rock cores, soil samples, and exposed strata may be of considerable value. Each photograph should include an identifying number or symbol, a date, and a scale.

8.4.3 Identification of all soils based on Practice D 2488, Classification D 2607, or Practice D 4083. Identification of rock materials based on Definitions of Terms C 119, Descriptive Nomenclature C 294, or Practice C 851. Classification of soil materials is discussed in Section 10.

8.4.4 Seepage and water-bearing zones and piezometric elevations found in each test hole, boring, or test pit.

8.4.5 In situ test results, where required, such as the penetration resistance or vane shear tests discussed in 9.3, plate load tests, or other in situ tests for engineering properties of soils or rock.

8.4.6 Percentage of core recovery and rock quality designation in core drilling as outlined in 9.3.5.

8.4.7 Graphical presentation of field and laboratory data and its interpretation facilitates comprehensive understanding of subsurface conditions.

9. Sampling and In Situ Testing

9.1 Obtain representative samples of each subsurface material that is significant to the project design and construction. The size and type of sample required is dependent upon the tests to be performed and the percentage of coarse particles in the sample.

NOTE 6—The size of disturbed or bulk samples for routine tests may vary at the discretion of the geotechnical investigator, but the following quantities are suggested as suitable for most materials: (*a*) Visual classification—50 to 500 g (2 oz to 1 lb); (*b*) Soil constants and particle size analysis of non-gravelly soil—500 g to 2.5 kg (1 to 5 lb); (*c*) Soil compaction tests and sieve analysis of gravelly soils—20 to 40 kg (40 to 80 lb); (*d*) Aggregate manufacture or aggregate properties tests—50 to 200 kg (100 to 400 lb).

9.2 Accurately identify each sample with the boring, test hole, or testpit number and depth below reference ground surface from which it was taken. Place a waterproof identification tag inside the container, securely close the container, protect it to withstand rough handling, and mark it with proper identification on the outside. Keep samples for natural moisture determination in sealed containers to prevent moisture loss. When drying of samples may affect classification or engineering properties test results, protect them to minimize moisture loss. Practices D 4220 address the transportation of samples from field to laboratory.

9.3 Recommended ASTM procedures for in situ sampling and testing are as follows:

9.3.1 Practice D 75 describes the sampling of coarse and fine aggregates for the preliminary investigation of a potential source of supply.

9.3.2 Test Method D 1194 describes the estimation of the bearing capacity of soil in place by means of field loading tests. The results can be useful for design of spread footings based on static loading conditions. The load test should be performed in conjunction with other field tests, generally in accordance with Method D 1586 or Method D 3441, to allow a determination of the applicability of the results.

9.3.3 Practice D 1452 describes the use of augers in soil investigations and sampling where disturbed soil samples can be used. This procedure is also valuable in connection with ground water exploration. Depths of auger investigations are limited by ground water conditions, soil characteristics, and equipment used.

9.3.4 Method D 1586 describes a procedure to obtain representative soil samples for identification and classification laboratory tests and to measure the resistance of the soil to penetration by a standardized sampler.

9.3.5 Practice D 1587 describes a procedure to recover relatively undisturbed soil samples suitable for laboratory testing.

9.3.6 Practice D 2113 describes a procedure to recover intact samples of rock and certain soils too hard to sample by Method D 1586 or Practice D 1587.

9.3.7 Practice D 3550 describes a procedure to recover moderately disturbed, representative samples of soil for classification testing and in some cases shear or consolidation testing.

9.3.8 Test Method D 2573 describes a procedure to measure the in situ unit shear resistance of cohesive soils by rotation of a four-bladed vane in a horizontal plane.

9.3.9 Test Method D 2937 describes a procedure for pushing a thin-wall tube 4 to 6 in. (100 to 150 mm) into a soil mass to recover a relatively undisturbed sample of known volume allowing the measurement of wet or total density and natural moisture content.

9.3.10 Test Method D 3385 describes a procedure for field measurement of the infiltration rate of soils. Water under a constant head is allowed to seep into the top surface of a fixed soil area and the volume rate of inflow into a known volume of soil is measured.

9.3.11 Method D 3441 describes the determination of the end bearing and side friction components of the resistance to penetration of a conical penetrometer into a soil mass.

9.3.12 Method G 57 describes the measurement of the electrical resistivity of a soil mass. A Wenner four-electrode configuration is used.

NOTE 7—Other in situ test procedures are being prepared by ASTM Committee D-18.

10. Classification of Earth Materials

10.1 Identify samples of soil and rock after submission to the laboratory for identification and classification tests in accordance with one or more of the following standards or applicable references (2 through 11), or both.

10.1.1 Descriptive Nomenclature 294.
10.1.2 Test Method D 2487.
10.1.3 Practice D 3282.
10.1.4 Method D 3397.
10.1.5 Practice D 2488.
10.1.6 Practice D 4083.
10.1.7 Classification D 4427.

11. Subsurface Profile

11.1 Delineate subsurface profiles only from actual geophysical, test-hole, test-pit, or cut-surface data. Interpolation between locations should be made on the basis of available geologic knowledge of the area and should be clearly identified. The use of geophysical techniques as discussed in 8.2 is a valuable aid in such interpolation. Geophysical survey data should be identified separately from sample data or in situ test data.

12. Interpretation of Results

12.1 Interpret the results of an investigation in terms of actual findings and make every effort to collect and include all field and laboratory data from previous investigations in the same area. Extrapolation of data into local areas not surveyed and tested should be made only for conceptual studies. Such extrapolation can be done only where geologically uniform subsurface disposition of soil and rock is known to exist on the basis of other data. Engineering properties of the soil and rock encountered on important projects should not be predicted solely on field identification or classification but should be verified by laboratory tests made on samples collected in accordance with Section 9 or by in situ testing, or both.

12.2 The recommendations for design parameters can be made only by professional engineers or geologists specializing in the field of geotechnical engineering and familiar with the purpose, conditions, and requirements of the study. Soil mechanics, rock mechanics, and geomorphological concepts must be combined with a knowledge of geotechnical engineering or hydrogeology to make a complete application of the results of the soil, rock, and ground water investigation. Complete design recommendations may require a more detailed study than that envisioned by this guide.

13. Report

13.1 The report of a subsurface investigation shall include:

13.1.1 Location of the area investigated in terms pertinent to the project. This may include sketch maps or aerial photos on which the test pits, bore holes, and sample areas are located, as well as geomorphological data relevant to the determination of the various soil and rock types. Such data includes elevation contours, streambeds, sink holes, cliffs, and the like. Where feasible, include in the report a geologic map or an agronomic soils map, or both, of the area investigated.

13.1.2 Describe the investigation procedures and include copies of all borings and testhole logs, all laboratory test results, and graphical interpretations of the geophysical measurements.

13.1.3 Include cross sections delineating the extent of the stratigraphic units and note anomalies or otherwise significant conditions.

13.1.4 Describe and relate the findings obtained under Sections 7, 8, and 12, using the subhead titles for the respective sections.

14. Precision and Bias

14.1 This guide provides qualitative data only; therefore, a precision and bias statement is not applicable.

REFERENCES

(1) Reeves, R. G., Anson, A., and Landen, D., eds., *Manual of Remote Sensing*, 2nd Ed., American Society of Photogrametry, Falls Church, VA.

(2) Hvorslev, M. J., "Subsurface Exploration and Sampling of Soils," Engineering Foundation, New York, 1948.

(3) "Classification of Rocks," Colorado School of Mines, Vol. 50, No. 1, 1955.

(4) Higgins, M. W., "Cataclastic Rocks," U.S. Geological Survey Professional Paper 687, 1971.

(5) Howell, J. V., and Weller, J. M., eds., "Glossary of Geology," American Geological Institute, Washington, DC, 1972.

(6) Wahls, H. E., ed., "In Situ Measurement of Soil Properties," *Proc. Specialty Conference of the Geotechnical Engineering Division*, ASCE, NC State Univ., Raleigh, NC, 1975.

(7) ASCE Manual No. 56, "Subsurface Investigation for Design and Construction of Foundations of Buildings," American Society of Civil Engineers, New York, NY, 1976.

(8) Dowding, C. H., ed., "Site Characterization and Exploration," *Proc. Specialty Workshop*, ASCE, Northwestern Univ., Evanston, IL, 1978.

(9) Mori, H., ed., "State of the Art on Current Practice of Soil Sampling," *Proc. International Symposium of Soil Sampling*, Int. Soc. Soil Mech. and Foundation Engineering, New York, NY, 1979.

(10) Alsud, S. A., "Engineering Geophysics," Bul. AEG, Vol. XIX, No. 2, 1982.

(11) Trautman, C. H., and Kulhawy, F. H., "Data Sources for Engineering Geologic Studies," Bul. AEG, Vol. XX, No. 4, 1983.

The American Society for Testing and Materials takes no position respecting the validity of any patent rights asserted in connection with any item mentioned in this standard. Users of this standard are expressly advised that determination of the validity of any such patent rights, and the risk of infringement of such rights, are entirely their own responsibility.

This standard is subject to revision at any time by the responsible technical committee and must be reviewed every five years and if not revised, either reapproved or withdrawn. Your comments are invited either for revision of this standard or for additional standards and should be addressed to ASTM Headquarters. Your comments will receive careful consideration at a meeting of the responsible technical committee, which you may attend. If you feel that your comments have not received a fair hearing you should make your views known to the ASTM Committee on Standards, 1916 Race St., Philadelphia, PA 19103.

000243

Designation: D 422 – 63 (Reapproved 1990)[ε1]

Standard Test Method for Particle-Size Analysis of Soils[1]

This standard is issued under the fixed designation D 422; the number immediately following the designation indicates the year of original adoption or, in the case of revision, the year of last revision. A number in parentheses indicates the year of last reapproval. A superscript epsilon (ε) indicates an editorial change since the last revision or reapproval.

[ε1] NOTE—Section 19 was added editorially in September 1990.

1. Scope

1.1 This test method covers the quantitative determination of the distribution of particle sizes in soils. The distribution of particle sizes larger than 75 µm (retained on the No. 200 sieve) is determined by sieving, while the distribution of particle sizes smaller than 75 µm is determined by a sedimentation process, using a hydrometer to secure the necessary data (Notes 1 and 2).

NOTE 1—Separation may be made on the No. 4 (4.75-mm), No. 40 (425-µm), or No. 200 (75-µm) sieve instead of the No. 10. For whatever sieve used, the size shall be indicated in the report.

NOTE 2—Two types of dispersion devices are provided: (*1*) a high-speed mechanical stirrer, and (*2*) air dispersion. Extensive investigations indicate that air-dispersion devices produce a more positive dispersion of plastic soils below the 20-µm size and appreciably less degradation on all sizes when used with sandy soils. Because of the definite advantages favoring air dispersion, its use is recommended. The results from the two types of devices differ in magnitude, depending upon soil type, leading to marked differences in particle size distribution, especially for sizes finer than 20 µm.

2. Referenced Documents

2.1 *ASTM Standards:*

D 421 Practice for Dry Preparation of Soil Samples for Particle-Size Analysis and Determination of Soil Constants[2]

E 11 Specification for Wire-Cloth Sieves for Testing Purposes[3]

E 100 Specification for ASTM Hydrometers[4]

3. Apparatus

3.1 *Balances*—A balance sensitive to 0.01 g for weighing the material passing a No. 10 (2.00-mm) sieve, and a balance sensitive to 0.1 % of the mass of the sample to be weighed for weighing the material retained on a No. 10 sieve.

3.2 *Stirring Apparatus*—Either apparatus A or B may be used.

3.2.1 Apparatus A shall consist of a mechanically operated stirring device in which a suitably mounted electric motor turns a vertical shaft at a speed of not less than 10 000 rpm without load. The shaft shall be equipped with a replaceable stirring paddle made of metal, plastic, or hard rubber, as shown in Fig. 1. The shaft shall be of such length that the stirring paddle will operate not less than ¾ in. (19.0 mm) nor more than 1½ in. (38.1 mm) above the bottom of the dispersion cup. A special dispersion cup conforming to either of the designs shown in Fig. 2 shall be provided to hold the sample while it is being dispersed.

3.2.2 Apparatus B shall consist of an air-jet dispersion cup[5] (Note 3) conforming to the general details shown in Fig. 3 (Notes 4 and 5).

NOTE 3—The amount of air required by an air-jet dispersion cup is of the order of 2 ft^3/min; some small air compressors are not capable of supplying sufficient air to operate a cup.

NOTE 4—Another air-type dispersion device, known as a dispersion tube, developed by Chu and Davidson at Iowa State College, has been shown to give results equivalent to those secured by the air-jet dispersion cups. When it is used, soaking of the sample can be done in the sedimentation cylinder, thus eliminating the need for transferring the slurry. When the air-dispersion tube is used, it shall be so indicated in the report.

NOTE 5—Water may condense in air lines when not in use. This water must be removed, either by using a water trap on the air line, or by blowing the water out of the line before using any of the air for dispersion purposes.

3.3 *Hydrometer*—An ASTM hydrometer, graduated to read in either specific gravity of the suspension or grams per litre of suspension, and conforming to the requirements for hydrometers 151H or 152H in Specifications E 100. Dimensions of both hydrometers are the same, the scale being the only item of difference.

3.4 *Sedimentation Cylinder*—A glass cylinder essentially 18 in. (457 mm) in height and 2½ in. (63.5 mm) in diameter, and marked for a volume of 1000 mL. The inside diameter shall be such that the 1000-mL mark is 36 ± 2 cm from the bottom on the inside.

3.5 *Thermometer*—A thermometer accurate to 1°F (0.5°C).

3.6 *Sieves*—A series of sieves, of square-mesh woven-wire cloth, conforming to the requirements of Specification E 11. A full set of sieves includes the following (Note 6):

[1] This test method is under the jurisdiction of ASTM Committee D-18 on Soil and Rock and is the direct responsibility of Subcommittee D18.03 on Texture, Plasticity, and Density Characteristics of Soils.

Current edition approved Nov. 21, 1963. Originally published 1935. Replaces D 422 – 62.

[2] *Annual Book of ASTM Standards*, Vol 04.08.

[3] *Annual Book of ASTM Standards*, Vol 14.02.

[4] *Annual Book of ASTM Standards*, Vol 14.03.

[5] Detailed working drawings for this cup are available at a nominal cost from the American Society for Testing and Materials, 1916 Race St., Philadelphia, PA 19103. Order Adjunct No. 12-404220-00.

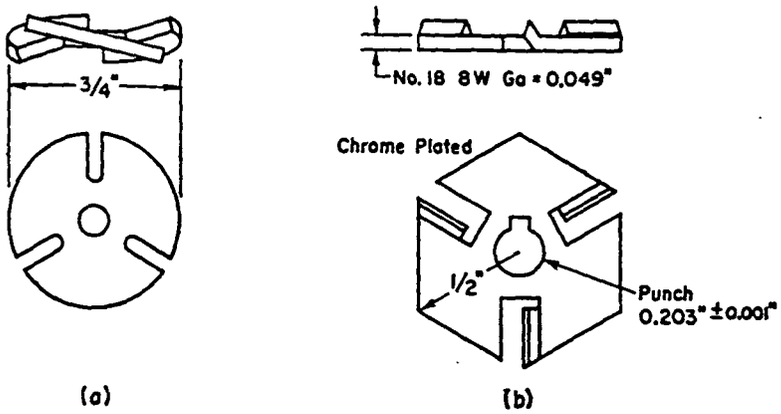

Metric Equivalents					
in.	0.001	0.049	0.203	½	¾
mm	0.03	1.24	5.16	12.7	19.0

FIG. 1 Detail of Stirring Paddles

3-in. (75-mm)	No. 10 (2.00-mm)
2-in. (50-mm)	No. 20 (850-µm)
1½-in. (37.5-mm)	No. 40 (425-µm)
1-in. (25.0-mm)	No. 60 (250-µm)
¾-in. (19.0-mm)	No. 140 (106-µm)
⅜-in. (9.5-mm)	No. 200 (75-µm)
No. 4 (4.75-mm)	

NOTE 6—A set of sieves giving uniform spacing of points for the graph, as required in Section 17, may be used if desired. This set consists of the following sieves:

3-in. (75-mm)	No. 16 (1.18-mm)
1½-in. (37.5-mm)	No. 30 (600-µm)
¾-in. (19.0-mm)	No. 50 (300-µm)
⅜-in. (9.5-mm)	No. 100 (150-µm)
No. 4 (4.75-mm)	No. 200 (75-µm)
No. 8 (2.36-mm)	

3.7 *Water Bath or Constant-Temperature Room*—A water bath or constant-temperature room for maintaining the soil suspension at a constant temperature during the hydrometer analysis. A satisfactory water tank is an insulated tank that maintains the temperature of the suspension at a convenient constant temperature at or near 68°F (20°C). Such a device is illustrated in Fig. 4. In cases where the work is performed in a room at an automatically controlled constant temperature, the water bath is not necessary.

3.8 *Beaker*—A beaker of 250-mL capacity.

3.9 *Timing Device*—A watch or clock with a second hand.

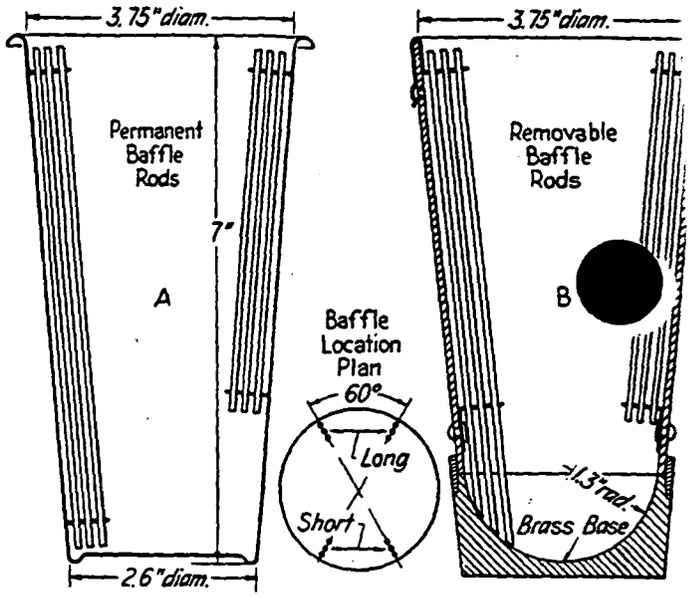

Metric Equivalents			
in.	1.3	2.6	3.75
mm	33	66	95.2

FIG. 2 Dispersion Cups of Apparatus

4. Dispersing Agent

4.1 A solution of sodium hexametaphosphate (sometimes called sodium metaphosphate) shall be used in distilled or demineralized water, at the rate of 40 g of sodium hexametaphosphate/litre of solution (Note 7).

NOTE 7—Solutions of this salt, if acidic, slowly revert or hydrolyze back to the orthophosphate form with a resultant decrease in dispersive action. Solutions should be prepared frequently (at least once a month) or adjusted to pH of 8 or 9 by means of sodium carbonate. Bottles containing solutions should have the date of preparation marked on them.

4.2 All water used shall be either distilled or demineralized water. The water for a hydrometer test shall be brought to the temperature that is expected to prevail during the hydrometer test. For example, if the sedimentation cylinder is to be placed in the water bath, the distilled or demineralized water to be used shall be brought to the temperature of the controlled water bath; or, if the sedimentation cylinder is used in a room with controlled temperature, the water for the test shall be at the temperature of the room. The basic temperature for the hydrometer test is 68°F (20°C). Small variations of temperature do not introduce differences that are of practical significance and prevent the use of corrections derived as prescribed.

000245

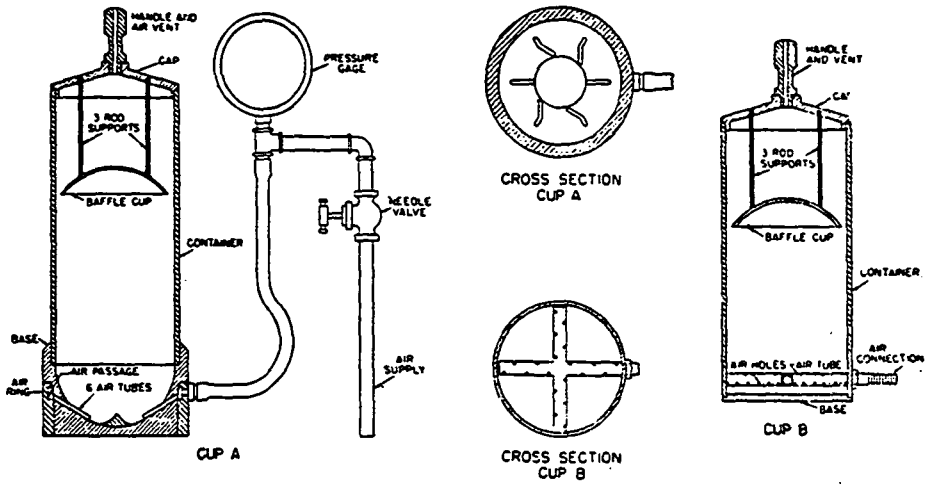

FIG. 3 Air-Jet Dispersion Cups of Apparatus B

5. Test Sample

5.1 Prepare the test sample for mechanical analysis as outlined in Practice D 421. During the preparation procedure the sample is divided into two portions. One portion contains only particles retained on the No. 10 (2.00-mm) sieve while the other portion contains only particles passing the No. 10 sieve. The mass of air-dried soil selected for purpose of tests, as prescribed in Practice D 421, shall be sufficient to yield quantities for mechanical analysis as follows:

5.1.1 The size of the portion retained on the No. 10 sieve shall depend on the maximum size of particle, according to the following schedule:

Nominal Diameter of Largest Particles, in. (mm)	Approximate Minimum Mass of Portion, g
⅜ (9.5)	500
¾ (19.0)	1000
1 (25.4)	2000
1½ (38.1)	3000
2 (50.8)	4000
3 (76.2)	5000

5.1.2 The size of the portion passing the No. 10 sieve shall be approximately 115 g for sandy soils and approximately 65 g for silt and clay soils.

5.2 Provision is made in Section 5 of Practice D 421 for weighing of the air-dry soil selected for purpose of tests, the separation of the soil on the No. 10 sieve by dry-sieving and washing, and the weighing of the washed and dried fraction retained on the No. 10 sieve. From these two masses the percentages retained and passing the No. 10 sieve can be calculated in accordance with 12.1.

NOTE 8—A check on the mass values and the thoroughness of pulverization of the clods may be secured by weighing the portion passing the No. 10 sieve and adding this value to the mass of the washed and oven-dried portion retained on the No. 10 sieve.

SIEVE ANALYSIS OF PORTION RETAINED ON NO. 10 (2.00-mm) SIEVE

6. Procedure

6.1 Separate the portion retained on the No. 10 (2.00-mm) sieve into a series of fractions using the 3-in. (75-mm), 2-in. (50-mm), 1½-in. (37.5-mm), 1-in. (25.0-mm), ¾-in. (19.0-mm), ⅜-in. (9.5-mm), No. 4 (4.75-mm), and No. 10 sieves, or as many as may be needed depending on the sample, or upon the specifications for the material under test.

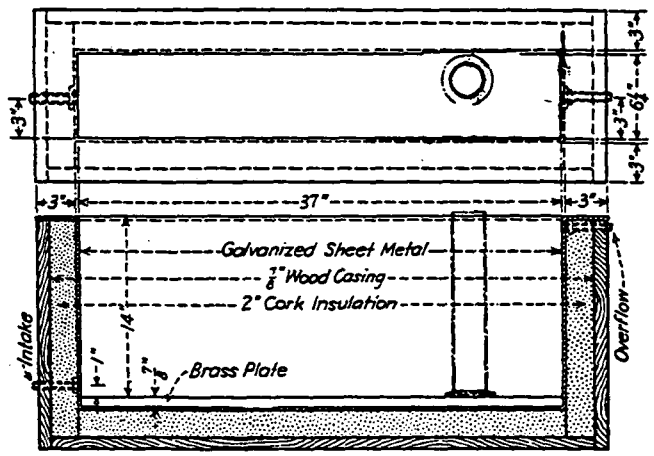

Metric Equivalents

in.	⅞	1	3	6¼	14	37
mm	22.2	25.4	76.2	158.2	356	940

FIG. 4 Insulated Water Bath

6.2 Conduct the sieving operation by means of a lateral and vertical motion of the sieve, accompanied by a jarring action in order to keep the sample moving continuously over the surface of the sieve. In no case turn or manipulate fragments in the sample through the sieve by hand. Continue sieving until not more than 1 mass % of the residue on a sieve passes that sieve during 1 min of sieving. When mechanical sieving is used, test the thoroughness of sieving by using the hand method of sieving as described above.

6.3 Determine the mass of each fraction on a balance conforming to the requirements of 3.1. At the end of weighing, the sum of the masses retained on all the sieves used should equal closely the original mass of the quantity sieved.

HYDROMETER AND SIEVE ANALYSIS OF PORTION PASSING THE NO. 10 (2.00-mm) SIEVE

7. Determination of Composite Correction for Hydrometer Reading

7.1 Equations for percentages of soil remaining in suspension, as given in 14.3, are based on the use of distilled or demineralized water. A dispersing agent is used in the water, however, and the specific gravity of the resulting liquid is appreciably greater than that of distilled or demineralized water.

7.1.1 Both soil hydrometers are calibrated at 68°F (20°C), and variations in temperature from this standard temperature produce inaccuracies in the actual hydrometer readings. The amount of the inaccuracy increases as the variation from the standard temperature increases.

7.1.2 Hydrometers are graduated by the manufacturer to be read at the bottom of the meniscus formed by the liquid on the stem. Since it is not possible to secure readings of soil suspensions at the bottom of the meniscus, readings must be taken at the top and a correction applied.

7.1.3 The net amount of the corrections for the three items enumerated is designated as the composite correction, and may be determined experimentally.

7.2 For convenience, a graph or table of composite corrections for a series of 1° temperature differences for the range of expected test temperatures may be prepared and used as needed. Measurement of the composite corrections may be made at two temperatures spanning the range of expected test temperatures, and corrections for the intermediate temperatures calculated assuming a straight-line relationship between the two observed values.

7.3 Prepare 1000 mL of liquid composed of distilled or demineralized water and dispersing agent in the same proportion as will prevail in the sedimentation (hydrometer) test. Place the liquid in a sedimentation cyclinder and the cylinder in the constant-temperature water bath, set for one of the two temperatures to be used. When the temperature of the liquid becomes constant, insert the hydrometer, and, after a short interval to permit the hydrometer to come to the temperature of the liquid, read the hydrometer at the top of the meniscus formed on the stem. For hydrometer 151H the composite correction is the difference between this reading and one; for hydrometer 152H it is the difference between the reading and zero. Bring the liquid and the hydrometer to the other temperature to be used, and secure the composite correction as before.

8. Hygroscopic Moisture

8.1 When the sample is weighed for the hydrometer test, weigh out an auxiliary portion of from 10 to 15 g in a small metal or glass container, dry the sample to a constant mass in an oven at 230 ± 9°F (110 ± 5°C), and weigh again. Record the masses.

9. Dispersion of Soil Sample

9.1 When the soil is mostly of the clay and silt sizes, weigh out a sample of air-dry soil of approximately 50 g. When the soil is mostly sand the sample should be approximately 100 g.

9.2 Place the sample in the 250-mL beaker and cover w 125 mL of sodium hexametaphosphate solution (40 g/ Stir until the soil is thoroughly wetted. Allow to for least 16 h.

9.3 At the end of the soaking period, dispers .m further, using either stirring apparatus A or B. If stirr apparatus A is used, transfer the soil - water slurry from beaker into the special dispersion cup shown in Fig. washing any residue from the beaker into the cup w distilled or demineralized water (Note 9). Add distilled demineralized water, if necessary, so that the cup is m than half full. Stir for a period of 1 min.

NOTE 9—A large size syringe is a convenient device for handling water in the washing operation. Other devices include the wash-w bottle and a hose with nozzle connected to a pressurized distilled w tank.

9.4 If stirring apparatus B (Fig. 3) is used, remove cover cap and connect the cup to a compressed air supply means of a rubber hose. A air gage must be on the l between the cup and the control valve. Open the cont valve so that the gage indicates 1 psi (7 kPa) pressure (N 10). Transfer the soil - water slurry from the beaker to air-jet dispersion cup by washing with distilled demineralized water. Add distilled or demineralized water necessary, so that the total volume in the cup is 250 mL, no more.

NOTE 10—The initial air pressure of 1 psi is required to prevent soil - water mixture from entering the air-jet chamber when the mix is transferred to the dispersion cup.

9.5 Place the cover cap on the cup and o the control valve until the gage pressure is 20 p I Disperse the soil according to the following sche

Plasticity Index	Dispersion Period, min
Under 5	5
6 to 20	10
Over 20	15

Soils containing large percentages of mica need be disper for only 1 min. After the dispersion period, reduce the g pressure to 1 psi preparatory to transfer of soil - water slu to the sedimentation cylinder.

10. Hydrometer Test

10.1 Immediately after dispersion, transfer the soil - wa slurry to the glass sedimentation cylinder, and add disti or demineralized water until the total volume is 1000 m

10.2 Using the palm of the hand over the open end of cylinder (or a rubber stopper in the open end), turn cylinder upside down and back for a period of 1 min complete the agitation of the slurry (Note 11). At the enc 1 min set the cylinder in a convenient location and t hydrometer readings at the following intervals of ti (measured from the beginning of sedimentation), or as m as may be needed, depending on the sample or the specif tion for the material under test: 2, 5, 15, 30, 60, 250, 1440 min. If the controlled water bath is used, the sedim tation cylinder should be placed in the bath between the and 5-min readings.

NOTE 11—The number of turns during this min d approximately 60, counting the turn upside down and back as two tu

Any soil remaining in the bottom of the cylinder during the first few turns should be loosened by vigorous shaking of the cylinder while it is in the inverted position.

10.3 When it is desired to take a hydrometer reading, carefully insert the hydrometer about 20 to 25 s before the reading is due to approximately the depth it will have when the reading is taken. As soon as the reading is taken, carefully remove the hydrometer and place it with a spinning motion in a graduate of clean distilled or demineralized water.

NOTE 12—It is important to remove the hydrometer immediately after each reading. Readings shall be taken at the top of the meniscus formed by the suspension around the stem, since it is not possible to secure readings at the bottom of the meniscus.

10.4 After each reading, take the temperature of the suspension by inserting the thermometer into the suspension.

11. Sieve Analysis

11.1 After taking the final hydrometer reading, transfer the suspension to a No. 200 (75-µm) sieve and wash with tap water until the wash water is clear. Transfer the material on the No. 200 sieve to a suitable container, dry in an oven at 230 ± 9°F (110 ± 5°C) and make a sieve analysis of the portion retained, using as many sieves as desired, or required for the material, or upon the specification of the material under test.

CALCULATIONS AND REPORT

12. Sieve Analysis Values for the Portion Coarser than the No. 10 (2.00-mm) Sieve

12.1 Calculate the percentage passing the No. 10 sieve by dividing the mass passing the No. 10 sieve by the mass of soil originally split on the No. 10 sieve, and multiplying the result by 100. To obtain the mass passing the No. 10 sieve, subtract the mass retained on the No. 10 sieve from the original mass.

12.2 To secure the total mass of soil passing the No. 4 (4.75-mm) sieve, add to the mass of the material passing the No. 10 sieve the mass of the fraction passing the No. 4 sieve and retained on the No. 10 sieve. To secure the total mass of soil passing the ⅜-in. (9.5-mm) sieve, add to the total mass of soil passing the No. 4 sieve, the mass of the fraction passing the ⅜-in. sieve and retained on the No. 4 sieve. For the remaining sieves, continue the calculations in the same manner.

12.3 To determine the total percentage passing for each sieve, divide the total mass passing (see 12.2) by the total mass of sample and multiply the result by 100.

13. Hygroscopic Moisture Correction Factor

13.1 The hydroscopic moisture correction factor is the ratio between the mass of the oven-dried sample and the air-dry mass before drying. It is a number less than one, except when there is no hygroscopic moisture.

14. Percentages of Soil in Suspension

14.1 Calculate the oven-dry mass of soil used in the hydrometer analysis by multiplying the air-dry mass by the hygroscopic moisture correction factor.

14.2 Calculate the mass of a total sample represented by the mass of soil used in the hydrometer test, by dividing the oven-dry mass used by the percentage passing the No. 10 (2.00-mm) sieve, and multiplying the result by 100. This value is the weight W in the equation for percentage remaining in suspension.

TABLE 1 Values of Correction Factor, a, for Different Specific Gravities of Soil Particles[A]

Specific Gravity	Correction Factor[A]
2.95	0.94
2.90	0.95
2.85	0.96
2.80	0.97
2.75	0.98
2.70	0.99
2.65	1.00
2.60	1.01
2.55	1.02
2.50	1.03
2.45	1.05

[A] For use in equation for percentage of soil remaining in suspension when using Hydrometer 152H.

14.3 The percentage of soil remaining in suspension at the level at which the hydrometer is measuring the density of the suspension may be calculated as follows (Note 13): For hydrometer 151H:

$$P = [(100\,000/W) \times G/(G - G_1)](R - G_1)$$

NOTE 13—The bracketed portion of the equation for hydrometer 151H is constant for a series of readings and may be calculated first and then multiplied by the portion in the parentheses.

For hydrometer 152H:

$$P = (Ra/W) \times 100$$

where:

a = correction faction to be applied to the reading of hydrometer 152H. (Values shown on the scale are computed using a specific gravity of 2.65. Correction factors are given in Table 1),

P = percentage of soil remaining in suspension at the level at which the hydrometer measures the density of the suspension,

R = hydrometer reading with composite correction applied (Section 7),

W = oven-dry mass of soil in a total test sample represented by mass of soil dispersed (see 14.2), g,

G = specific gravity of the soil particles, and

G_1 = specific gravity of the liquid in which soil particles are suspended. Use numerical value of one in both instances in the equation. In the first instance any possible variation produces no significant effect, and in the second instance, the composite correction for R is based on a value of one for G_1.

15. Diameter of Soil Particles

15.1 The diameter of a particle corresponding to the percentage indicated by a given hydrometer reading shall be calculated according to Stokes' law (Note 14), on the basis that a particle of this diameter was at the surface of the suspension at the beginning of sedimentation and had settled to the level at which the hydrometer is measuring the density of the suspension. According to Stokes' law:

$$D = \sqrt{[30n/980(G - G_1)] \times L/T}$$

where:

D = diameter of particle, mm,

n = coefficient of viscosity of the suspending medium (in this case water) in poises (varies with changes in temperature of the suspending medium),

L = distance from the surface of the suspension to the level at which the density of the suspension is being measured, cm. (For a given hydrometer and sedimentation cylinder, values vary according to the hydrometer readings. This distance is known as effective depth (Table 2)),

T = interval of time from beginning of sedimentation to the taking of the reading, min,

G = specific gravity of soil particles, and

G_1 = specific gravity (relative density) of suspending medium (value may be used as 1.000 for all practical purposes).

NOTE 14—Since Stokes' law considers the terminal velocity of a single sphere falling in an infinity of liquid, the sizes calculated represent the diameter of spheres that would fall at the same rate as the soil particles.

15.2 For convenience in calculations the above equation may be written as follows:

$$D = K\sqrt{L/T}$$

where:

K = constant depending on the temperature of the suspension and the specific gravity of the soil particles. Values of K for a range of temperatures and specific gravities are given in Table 3. The value of K does not change for a series of readings constituting a test, while values of L and T do vary.

15.3 Values of D may be computed with sufficient accuracy, using an ordinary 10-in. slide rule.

NOTE 15—The value of L is divided by T using the A- and B-scales, the square root being indicated on the D-scale. Without ascertaining the value of the square root it may be multiplied by K, using either the C- or CI-scale.

16. Sieve Analysis Values for Portion Finer than No. 10 (2.00-mm) Sieve

16.1 Calculation of percentages passing the various sieves used in sieving the portion of the sample from the hydrometer test involves several steps. The first step is to calculate the mass of the fraction that would have been retained on the No. 10 sieve had it not been removed. This mass is equal to the total percentage retained on the No. 10 sieve (100 minus total percentage passing) times the mass of the total sample represented by the mass of soil used (as calculated in 14.2), and the result divided by 100.

16.2 Calculate next the total mass passing the No. 200 sieve. Add together the fractional masses retained on all the sieves, including the No. 10 sieve, and subtract this sum from the mass of the total sample (as calculated in 14.2).

16.3 Calculate next the total masses passing each of the other sieves, in a manner similar to that given in 12.2.

16.4 Calculate last the total percentages passing by dividing the total mass passing (as calculated in 16.3) by the total mass of sample (as calculated in 14.2), and multiply the result by 100.

17. Graph

17.1 When the hydrometer analysis is performed, a graph of the test results shall be made, plotting the di[illegible] c particles on a logarithmic scale as the abscissa anc percentages smaller than the corresponding diameters :

TABLE 2 Values of Effective Depth Based on Hydrometer ar[illegible] Sedimentation Cylinder of Specified Sizes[A]

Hydrometer 151H		Hydrometer 152[illegible]			
Actual Hydrometer Reading	Effective Depth, L, cm	Actual Hydrometer Reading	Effective Depth, L, cm	Actual Hydrometer Reading	Effective Depth, L, cm
1.000	16.3	0	16.3	31	11.2
1.001	16.0	1	16.1	32	11.1
1.002	15.8	2	16.0	33	10.9
1.003	15.5	3	15.8	34	10.7
1.004	15.2	4	15.6	35	10.6
1.005	15.0	5	15.5		
1.006	14.7	6	15.3	36	10.4
1.007	14.4	7	15.2	37	10.2
1.008	14.2	8	15.0	38	10.1
1.009	13.9	9	14.8	39	9.9
1.010	13.7	10	14.7	40	9.7
1.011	13.4	11	14.5	41	9.6
1.012	13.1	12	14.3	42	9.4
1.013	12.9	13	14.2	43	9.2
1.014	12.6	14	14.0	44	9.1
1.015	12.3	15	13.8	45	8.9
1.016	12.1	16	13.7	46	8.8
1.017	11.8	17	13.5	47	8.6
1.018	11.5	18	13.3	48	8.4
1.019	11.3	19	13.2	49	8.3
1.020	11.0	20	13.0	50	8.1
1.021	10.7	21	12.9	51	7.9
1.022	10.5	22	12.7	52	7.8
1.023	10.2	23	12.5	53	7.6
1.024	10.0	24	12.4	54	7.4
1.025	9.7	25	12.2	55	7.3
1.026	9.4	26	12.0	56	[illegible]
1.027	9.2	27	11.9	57	[illegible]
1.028	8.9	28	11.7	58	[illegible]
1.029	8.6	29	11.5	59	6.6
1.030	8.4	30	11.4	60	6.5
1.031	8.1				
1.032	7.8				
1.033	7.6				
1.034	7.3				
1.035	7.0				
1.036	6.8				
1.037	6.5				
1.038	6.2				

[A] Values of effective depth are calculated from the equation:

$$L = L_1 + \tfrac{1}{2}[L_2 - (V_B/A)]$$

where:

L = effective depth, cm,

L_1 = distance along the stem of the hydrometer from the top of the bulb mark for a hydrometer reading, cm,

L_2 = overall length of the hydrometer bulb, cm,

V_B = volume of hydrometer bulb, cm^3, and

A = cross-sectional area of sedimentation cylinder, cm^2

Values used in calculating the values in Table 2 are as follows:

For both hydrometers, 151H and 152H:

L_2 = 14.0 cm

V_B = 67.0 cm^3

A = 27.8 cm^2

For hydrometer 151H:

L_1 = 10.5 cm for a reading of 1.000

= 2.3 cm for a reading of 1.031

For hydrometer 152H:

L_1 = 10.5 cm for a reading of 0 g/litre

= 2.3 cm for a reading of 50 g/litre

000249

TABLE 3 Values of K for Use in Equation for Computing Diameter of Particle in Hydrometer Analysis

Temperature, °C	Specific Gravity of Soil Particles								
	2.45	2.50	2.55	2.60	2.65	2.70	2.75	2.80	2.85
16	0.01510	0.01505	0.01481	0.01457	0.01435	0.01414	0.01394	0.01374	0.01356
17	0.01511	0.01486	0.01462	0.01439	0.01417	0.01396	0.01376	0.01356	0.01338
18	0.01492	0.01467	0.01443	0.01421	0.01399	0.01378	0.01359	0.01339	0.01321
19	0.01474	0.01449	0.01425	0.01403	0.01382	0.01361	0.01342	0.1323	0.01305
20	0.01456	0.01431	0.01408	0.01386	0.01365	0.01344	0.01325	0.01307	0.01289
21	0.01438	0.01414	0.01391	0.01369	0.01348	0.01328	0.01309	0.01291	0.01273
22	0.01421	0.01397	0.01374	0.01353	0.01332	0.01312	0.01294	0.01276	0.01258
23	0.01404	0.01381	0.01358	0.01337	0.01317	0.01297	0.01279	0.01261	0.01243
24	0.01388	0.01365	0.01342	0.01321	0.01301	0.01282	0.01264	0.01246	0.01229
25	0.01372	0.01349	0.01327	0.01306	0.01286	0.01267	0.01249	0.01232	0.01215
26	0.01357	0.01334	0.01312	0.01291	0.01272	0.01253	0.01235	0.01218	0.01201
27	0.01342	0.01319	0.01297	0.01277	0.01258	0.01239	0.01221	0.01204	0.01188
28	0.01327	0.01304	0.01283	0.01264	0.01244	0.01255	0.01208	0.01191	0.01175
29	0.01312	0.01290	0.01269	0.01249	0.01230	0.01212	0.01195	0.01178	0.01162
30	0.01298	0.01276	0.01256	0.01236	0.01217	0.01199	0.01182	0.01165	0.01149

arithmetic scale as the ordinate. When the hydrometer analysis is not made on a portion of the soil, the preparation of the graph is optional, since values may be secured directly from tabulated data.

18. Report

18.1 The report shall include the following:

18.1.1 Maximum size of particles,

18.1.2 Percentage passing (or retained on) each sieve, which may be tabulated or presented by plotting on a graph (Note 16),

18.1.3 Description of sand and gravel particles:

18.1.3.1 Shape—rounded or angular,

18.1.3.2 Hardness—hard and durable, soft, or weathered and friable,

18.1.4 Specific gravity, if unusually high or low,

18.1.5 Any difficulty in dispersing the fraction passing the No. 10 (2.00-mm) sieve, indicating any change in type and amount of dispersing agent, and

18.1.6 The dispersion device used and the length of the dispersion period.

NOTE 16—This tabulation of graph represents the gradation of the sample tested. If particles larger than those contained in the sample were removed before testing, the report shall so state giving the amount and maximum size.

18.2 For materials tested for compliance with definite specifications, the fractions called for in such specifications shall be reported. The fractions smaller than the No. 10 sieve shall be read from the graph.

18.3 For materials for which compliance with definite specifications is not indicated and when the soil is composed almost entirely of particles passing the No. 4 (4.75-mm) sieve, the results read from the graph may be reported as follows:

(1) Gravel, passing 3-in. and retained on No. 4 sieve ..... %
(2) Sand, passing No. 4 sieve and retained on No. 200 sieve ..... %
  (a) Coarse sand, passing No. 4 sieve and retained on No. 10 sieve ..... %
  (b) Medium sand, passing No. 10 sieve and retained on No. 40 sieve ..... %
  (c) Fine sand, passing No. 40 sieve and retained on No. 200 sieve ..... %
(3) Silt size, 0.074 to 0.005 mm ..... %
(4) Clay size, smaller than 0.005 mm ..... %
  Colloids, smaller than 0.001 mm ..... %

18.4 For materials for which compliance with definite specifications is not indicated and when the soil contains material retained on the No. 4 sieve sufficient to require a sieve analysis on that portion, the results may be reported as follows (Note 17):

SIEVE ANALYSIS

Sieve Size	Percentage Passing
3-in.	.....
2-in.	.....
1½-in.	.....
1-in.	.....
¾-in.	.....
⅜-in.	.....
No. 4 (4.75-mm)	.....
No. 10 (2.00-mm)	.....
No. 40 (425-μm)	.....
No. 200 (75-μm)	.....
HYDROMETER ANALYSIS	
0.074 mm	.....
0.005 mm	.....
0.001 mm	.....

NOTE 17—No. 8 (2.36-mm) and No. 50 (300-μm) sieves may be substituted for No. 10 and No. 40 sieves.

19. Keywords

19.1 grain-size; hydrometer analysis; hygroscopic moisture; particle-size; sieve analysis

The American Society for Testing and Materials takes no position respecting the validity of any patent rights asserted in connection with any item mentioned in this standard. Users of this standard are expressly advised that determination of the validity of any such patent rights, and the risk of infringement of such rights, are entirely their own responsibility.

This standard is subject to revision at any time by the responsible technical committee and must be reviewed every five years and if not revised, either reapproved or withdrawn. Your comments are invited either for revision of this standard or for additional standards and should be addressed to ASTM Headquarters. Your comments will receive careful consideration at a meeting of the responsible technical committee, which you may attend. If you feel that your comments have not received a fair hearing you should make your views known to the ASTM Committee on Standards, 1916 Race St., Philadelphia, PA 19103.

Test Method for Laboratory Compaction Characteristics of Soil Using Standard Effort (12,400 ft-lbf/ft^3 (600 kN-m/m^3))[1]

This standard is issued under the fixed designation D 698; the number immediately following the designation indicates the year of original adoption or, in the case of revision, the year of last revision. A number in parentheses indicates the year of last reapproval. A superscript epsilon (ε) indicates an editorial change since the last revision or reapproval.

1. Scope

1.1 This test method covers laboratory compaction procedures used to determine the relationship between water content and dry unit weight of soils (compaction curve) compacted in a 4 or 6-in. (101.6 or 152.4-mm) diameter mold with a 5.5-lbf (24.4-N) rammer dropped from a height of 12 in. (305 mm) producing a compactive effort of 12,400 ft-lbf/ft^3 (600 kN-m/m^3).

NOTE 1—The equipment and procedures are similar as those proposed by R. R. Proctor (*Engineering News Record*—September 7, 1933) with this one major exception: his rammer blows were applied as "12 inch firm strokes" instead of free fall, producing variable compactive effort depending on the operator, but probably in the range 15,000 to 25,000 ft-lbf/ft^3 (700 to 1,200 kN-m/m^3). The standard effort test (see 3.2.2) is sometimes referred to as the Proctor Test.

NOTE 2—Soils and soil-aggregate mixtures should be regarded as natural occurring fine- or coarse-grained soils or composites or mixtures of natural soils, or mixtures of natural and processed soils or aggregates such as silt, gravel, or crushed rock.

1.2 This test method applies only to soils that have 30 % or less by weight of particles retained on the ¾-inch (19.0-mm) sieve.

NOTE 3—For relationships between unit weights and water contents of soils with 30 % or less by weight of material retained on the ¾-in. (19.0-mm) sieve to unit weights and water contents of the fraction passing ¾-in. (19.0-mm) sieve, see Practice D 4718.

1.3 Three alternative procedures are provided. The procedure used shall be as indicated in the specification for the material being tested. If no procedure is specified, the choice should be based on the material gradation.

1.3.1 *Procedure A:*

1.3.1.1 *Mold*—4-in. (101.6-mm) diameter.

1.3.1.2 *Material*—Passing No. 4 (4.75-mm) sieve.

1.3.1.3 *Layers*—Three.

1.3.1.4 *Blows per layer*—25.

1.3.1.5 *Use*—May be used if 20 % or less by weight of the material is retained on the No. 4 (4.75-mm) sieve.

1.3.1.6 *Other Use*—If this procedure is not specified, materials that meet these gradation requirements may be tested using Procedures B or C.

1.3.2 *Procedure B:*

1.3.2.1 *Mold*—4-in. (101.6-mm) diameter.

1.3.2.2 *Material*—Passing ⅜-in. (9.5-mm) sieve.

1.3.2.3 *Layers*—Three.

1.3.2.4 *Blows per layer*—25.

1.3.2.5 *Use*—Shall be used if more than 20 % by weight of the material is retained on the No. 4 (4.75-mm) sieve and 20 % or less by weight of the material is retained on the ⅜-in. (9.5-mm) sieve.

1.3.2.6 *Other Use*—If this procedure is not specified, materials that meet these gradation requirements may be tested using Procedure C.

1.3.3 *Procedure C:*

1.3.3.1 *Mold*—6-in. (152.4-mm) diameter.

1.3.3.2 *Material*—Passing ¾-inch (19.0-mm) sieve.

1.3.3.3 *Layers*—Three.

1.3.3.4 *Blows per layer*—56.

1.3.3.5 *Use*—Shall be used if more than 20 % by weight of the material is retained on the ⅜-in. (9.5-mm) sieve and less than 30 % by weight of the material is retained on the ¾-in. (19.0-mm) sieve.

1.3.4 The 6-in. (152.4-mm) diameter mold shall not be used with Procedure A or B.

NOTE 4—Results have been found to vary slightly when a material is tested at the same compactive effort in different size molds.

1.4 If the test specimen contains more than 5 % by weight oversize fraction (coarse fraction) and the material will not be included in the test, corrections must be made to the unit weight and water content of the specimen or to the appropriate field in place density test specimen using Practice D 4718.

1.5 This test method will generally produce a well defined maximum dry unit weight for non-free draining soils. If this test method is used for free draining soils the maximum unit weight may not be well defined, and can be less than obtained using Test Methods D 4253.

1.6 The values in inch-pound units are to be regarded as the standard. The values stated in SI units are provided for information only.

1.6.1 In the engineering profession it is customary practice to use, interchangeably, units representing both mass and force, unless dynamic calculations ($F = Ma$) are involved. This implicitly combines two separate systems of units, that is, the absolute system and the gravimetric system. It is scientifically undesirable to combine the use of two separate systems within a single standard. This test method has been written using inch-pound units (gravimetric system) where the pound (lbf) represents a unit of force. The use of mass (lbm) is for convenience of units and is not intended to convey the use is scientifically correct. Conversions are given in the SI system in accordance with Practice E 380. The use of balances or scales recording pounds of mass (lbm), or the recording of density in lbm/ft^3 should not be regarded as nonconformance with this standard.

[1] This test method is under the jurisdiction of ASTM Committee D-18 on Soil and Rock and is the direct responsibility of Subcommittee D18.03 on Texture, Plasticity and Density Characteristics of Soils.

Current edition approved Nov. 19, 1991. Published January 1992.

1.7 *This standard does not purport to address all of the safety problems, if any, associated with its use. It is the responsibility of the user of this standard to establish appropriate safety and health practices and determine the applicability of regulatory limitations prior to use.*

2. Referenced Documents

2.1 *ASTM Standards:*

C 127 Test Method for Specific Gravity and Absorption of Coarse Aggregate[2]

C 136 Method for Sieve Analysis of Fine and Coarse Aggregate[2]

D 422 Test Method for Particle Size Analysis of Soils[3]

D 653 Terminology Relating to Soil, Rock, and Contained Fluids[3]

D 854 Test Method for Specific Gravity of Soils[3]

D 1557 Test Methods for Moisture-Density Relations of Soils and Soil Aggregate Mixtures Using 10-lb (4.54-kg.) Rammer and 18-in. (457 mm) Drop[3]

D 2168 Test Methods for Calibration of Laboratory Mechanical-Rammer Soil Compactors[3]

D 2216 Test Method for Laboratory Determination of Water (Moisture) Content of Soil, Rock and Soil-Aggregate Mixtures[3]

D 2487 Test Method for Classification of Soils for Engineering Purposes[3]

D 2488 Practice for Description of Soils (Visual-Manual Procedure)[3]

D 4220 Practices for Preserving and Transporting Soil Samples[3]

D 4253 Test Methods for Maximum Index Density of Soils Using a Vibratory Table[3]

D 4718 Practice for Correction of Unit Weight and Water Content for Soils Containing Oversize Particles[3]

D 4753 Specification for Evaluating, Selecting and Specifying Balances and Scales For Use in Soil and Rock Testing[3]

E 1 Specification for ASTM Thermometers[4]

E 11 Specification for Wire-Cloth Sieves for Testing Purposes[5]

E 319 Practice for the Evaluation of Single-Pan Mechanical Balances[5]

E 380 Practice for Use of the International System of Units (SI) (the Modernized Metric System)[5]

3. Terminology

3.1 *Definitions*—See Terminology D 653 for general definitions.

3.2 *Description of Terms Specific to This Standard:*

3.2.1 *oversize fraction (coarse fraction),* P_c in %—the portion of total sample not used in performing the compaction test; it may be the portion of total sample retained on the No. 4 (4.75-mm), 3/8-in. (9.5-mm), or 3/4-in. (19.0-mm) sieve.

3.2.2 *standard effort*—the term for the 12,400 ft-lbf/ft^3 (600 kN-m/m^3) compactive effort applied by the equipment and procedures of this test.

3.2.3 *standard maximum dry unit weight,* γ_{dmax} in lbf/ft^3 (kN/m^3)—the maximum value defined by the compaction curve for a compaction test using standard effort.

3.2.4 *standard optimum water content,* w_o in %—the water content at which a soil can be compacted to the maximum dry unit weight using standard compactive effort.

3.2.5 *test fraction (finer fraction),* P_F in %—the portion of the total sample used in performing the compaction test; it is the fraction passing the No. 4 (4.75-mm) sieve in Procedure A, minus 3/8-in. (9.5-mm) sieve in Procedure B, or minus 3/4-in. (19.0-mm) sieve in Procedure C.

4. Summary of Test Method

4.1 A soil at a selected water content is placed in three layers into a mold of given dimensions, with each layer compacted by 25 or 56 blows of a 5.5-lbf (24.4-N) rammer dropped from a distance of 12-in. (305-mm), subjecting the soil to a total compactive effort of about 12,400 ft-lbf/ft^3 (600 kN-m/m^3). The resulting dry unit weight is determined. The procedure is repeated for a sufficient number of water contents to establish a relationship between the dry unit weight and the water content for the soil. This data, when plotted, represents a curvilinear relationship known as the compaction curve. The values of optimum water content and standard maximum dry unit weight are determined from the compaction curve.

5. Significance and Use

5.1 Soil placed as engineering fill (embankments, foundation pads, road bases) is compacted to a dense state to obtain satisfactory engineering properties such as, shear strength, compressibility, or permeability. Also, foundation soils are often compacted to improve their engineering properties. Laboratory compaction tests provide the basis for determining the percent compaction and water content needed to achieve the required engineering properties, and for controlling construction to assure that the required compaction and water contents are achieved.

5.2 During design of an engineered fill, shear, consolidation, permeability, or other tests require preparation of test specimens by compacting at some water content to some unit weight. It is common practice to first determine the optimum water content (w_o) and maximum dry unit weight (γ_{dmax}) by means of a compaction test. Test specimens are compacted at a selected water content (w), either wet or dry of optimum (w_o) or at optimum (w_o), and at a selected dry unit weight related to a percentage of maximum dry unit weight (γ_{dmax}). The selection of water content (w), either wet or dry of optimum (w_o) or at optimum (w_o) and the dry unit weight (γ_{dmax}) may be based on past experience, or a range of values may be investigated to determine the necessary percent of compaction.

6. Apparatus

6.1 *Mold Assembly*—The molds shall be cylindrical in shape, made of rigid metal and be within the capacity and dimensions indicated in 6.1.1 or 6.1.2 and Figs. 1 and 2. The walls of the mold may be solid, split, or tapered. The "split" type may consist of two half-round sections, or a section of

[2] *Annual Book of ASTM Standards*, Vol 04.02.
[3] *Annual Book of ASTM Standards*, Vol 04.08.
[4] *Annual Book of ASTM Standards*, Vol 14.03.
[5] *Annual Book of ASTM Standards*, Vol 14.02.

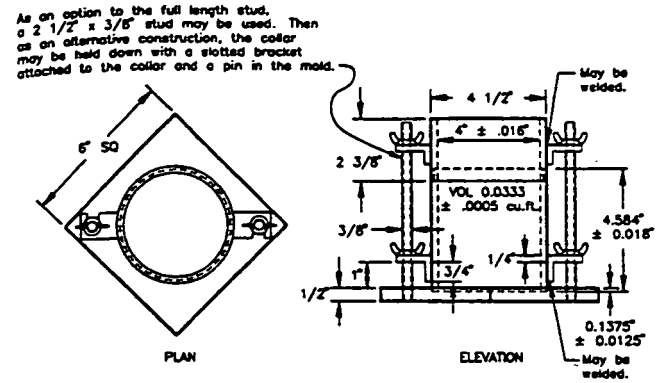

FIG. 1 4.0-in. Cylindrical Mold

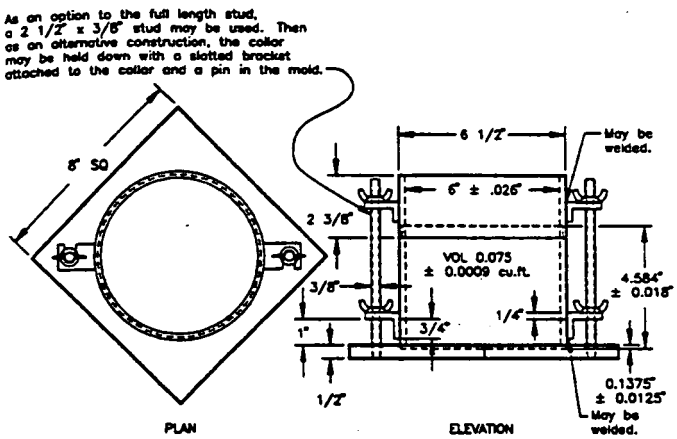

FIG. 2 6.0-in. Cylindrical Mold

pipe split along one element, which can be securely locked together to form a cylinder meeting the requirements of this section. The "tapered" type shall an internal diameter taper that is uniform and not more than 0.200 in./ft (16.7- mm/m) of mold height. Each mold shall have a base plate and an extension collar assembly, both made of rigid metal and constructed so they can be securely attached and easily detached from the mold. The extension collar assembly shall have a height extending above the top of the mold of at least 2.0 in. (50.8-mm) which may include an upper section that flares out to form a funnel provided there is at least a 0.75 in. (19.0-mm) straight cylindrical section beneath it. The extension collar shall align with the inside of the mold. The bottom of the base plate and bottom of the centrally recessed area that accepts the cylindrical mold shall be planar.

6.1.1 *Mold, 4 in.*—A mold having a 4.000 ± 0.016-in. (101.6 ± 0.4-mm) average inside diameter, a height of 4.584 ± 0.018-in. (116.4 ± 0.5-mm) and a volume of 0.0333 ± 0.0005 ft^3 (944 ± 14 cm^3). A mold assembly having the minimum required features is shown in Fig. 1.

6.1.2 *Mold, 6 in.*—A mold having a 6.000 ± 0.026-in. (152.4 ± 0.7-mm) average inside diameter, a height of 4.584 ± 0.018-in. (116.4 ± 0.5-mm), and a volume of 0.075 ± 0.0009 ft^3 (2124 ± 25 cm^3). A mold assembly having the minimum required features is shown in Fig. 2.

6.2 *Rammer*—A rammer, either manually operated as described further in 6.2.1 or mechanically operated as described in 6.2.2. The rammer shall fall freely through a distance of 12 ± 0.05-in. (304.8 ± 1.3-mm) from the surface of the specimen. The mass of the rammer shall be 5 ± 0.02-lbm (2.5 ± 0.01-kg), except that the mass of mechanical rammers may be adjusted as described in Methods D 2168, see Note 5. The striking face of the rammer shall be planar and circular, except as noted in 6.2.2.3, with a diameter when new of 2.000 ± 0.005-in. (50.80 ± 0.13-mm). The rammer shall be replaced if the striking face becomes worn or bellied to the extent that the diameter exceeds 2.000 ± 0.01-in. (50.80 ± 0.25-mm).

NOTE 5—It is a common and acceptable practice in the inch-pound system to assume that the mass of the rammer is equal to its mass determined using either a kilogram or pound balance and 1 lbf is equal to 1 lbm or 0.4536 kg. or 1 N is equal to 0.2248 lbm or 0.1020 kg.

6.2.1 *Manual Rammer*—The rammer shall be equipped with a guide sleeve that has sufficient clearance that the free fall of the rammer shaft and head is not restricted. The guide sleeve shall have at least four vent holes at each end (eight holes total) located with centers ¾ ± 1/16-in. (19.0 ± 1.6-mm) from each end and spaced 90 degrees apart. The minimum diameter of the vent holes shall be ⅜-in. (9.5-mm). Additional holes or slots may be incorporated in the guide sleeve.

6.2.2 *Mechanical Rammer-Circular Face*—The rammer shall operate mechanically in such a manner as to provide uniform and complete coverage of the specimen surface. There shall be 0.10 ± 0.03-in. (2.5 ± 0.8-mm) clearance between the rammer and the inside surface of the mold at its smallest diameter. The mechanical rammer shall meet the calibration requirements of Test Methods D 2168. The mechanical rammer shall be equipped with a positive mechanical means to support the rammer when not in operation.

6.2.2.3 *Mechanical Rammer-Sector Face*—When used with the 6-in. (152.4-mm) mold, a sector face rammer may be used in place of the circular face rammer. The specimen contact face shall have the shape of a sector of a circle of radius equal to 2.90 ± 0.02-in. (73.7 ± 0.5-mm). The rammer shall operate in such a manner that the vertex of the sector is positioned at the center of the specimen.

6.3 *Sample Extruder (optional)*—A jack, frame or other device adapted for the purpose of extruding compacted specimens from the mold.

6.4 *Balance*—A class GP5 balance meeting the requirements of Specification D 4753 for a balance of 1-g readability.

6.5 *Drying Oven*—Thermostatically controlled, preferably of a forced-draft type and capable of maintaining a uniform temperature of 230 ± 9°F (110 ± 5°C) throughout the drying chamber.

6.6 *Straightedge*—A stiff metal straightedge of any convenient length but not less than 10-in. (254-mm). The total length of the straightedge shall be machined straight to a tolerance of ±0.005-in. (±0.1-mm). The scraping edge shall be beveled if it is thicker than ⅛-in. (3-mm).

6.7 *Sieves*—¾-in. (19.0-mm), ⅜-in. (9.5-mm), and No. 4 (4.75-mm), conforming to the requirements of Specification E 11.

6.8 *Mixing Tools*—Miscellaneous tools such as mixing pan, spoon, trowel, spatula, etc., or a suitable mechanical device for thoroughly mixing the sample of soil with increments of water.

000253

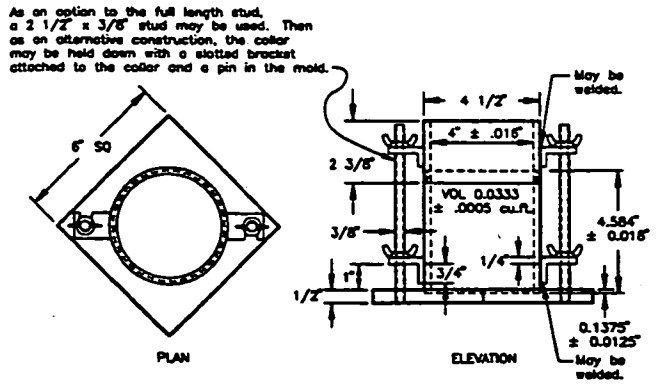

FIG. 1 4.0-in. Cylindrical Mold

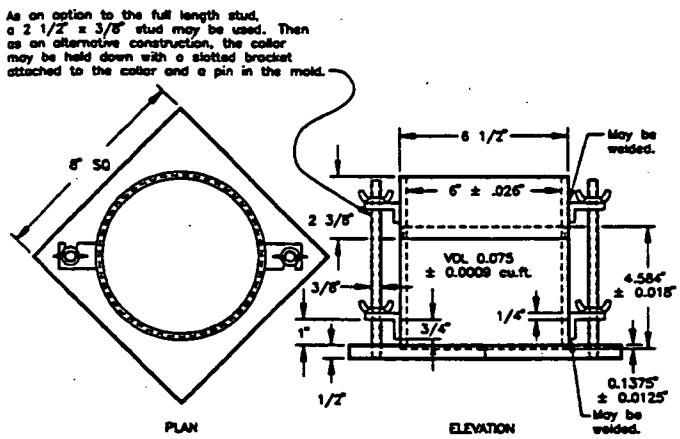

FIG. 2 6.0-in. Cylindrical Mold

pipe split along one element, which can be securely locked together to form a cylinder meeting the requirements of this section. The "tapered" type shall an internal diameter taper that is uniform and not more than 0.200 in./ft (16.7- mm/m) of mold height. Each mold shall have a base plate and an extension collar assembly, both made of rigid metal and constructed so they can be securely attached and easily detached from the mold. The extension collar assembly shall have a height extending above the top of the mold of at least 2.0 in. (50.8-mm) which may include an upper section that flares out to form a funnel provided there is at least a 0.75 in. (19.0-mm) straight cylindrical section beneath it. The extension collar shall align with the inside of the mold. The bottom of the base plate and bottom of the centrally recessed area that accepts the cylindrical mold shall be planar.

6.1.1 *Mold, 4 in.*—A mold having a 4.000 ± 0.016-in. (101.6 ± 0.4-mm) average inside diameter, a height of 4.584 ± 0.018-in. (116.4 ± 0.5-mm) and a volume of 0.0333 ± 0.0005 ft^3 (944 ± 14 cm^3). A mold assembly having the minimum required features is shown in Fig. 1.

6.1.2 *Mold, 6 in.*—A mold having a 6.000 ± 0.026-in. (152.4 ± 0.7-mm) average inside diameter, a height of 4.584 ± 0.018-in. (116.4 ± 0.5-mm), and a volume of 0.075 ± 0.0009 ft^3 (2124 ± 25 cm^3). A mold assembly having the minimum required features is shown in Fig. 2.

6.2 *Rammer*—A rammer, either manually operated as described further in 6.2.1 or mechanically operated as described in 6.2.2. The rammer shall fall freely through a distance of 12 ± 0.05-in. (304.8 ± 1.3-mm) from the surface of the specimen. The mass of the rammer shall be 5.5 ± 0.02-lbm (2.5 ± 0.01-kg), except that the mass of the mechanical rammers may be adjusted as described in Test Methods D 2168, see Note 5. The striking face of the rammer shall be planar and circular, except as noted in 6.2.2.3, with a diameter when new of 2.000 ± 0.005-in. (50.80 ± 0.13-mm). The rammer shall be replaced if the striking face becomes worn or bellied to the extent that the diameter exceeds 2.000 ± 0.01-in. (50.80 ± 0.25-mm).

NOTE 5—It is a common and acceptable practice in the inch-pound system to assume that the mass of the rammer is equal to its mass determined using either a kilogram or pound balance and 1 lbf is equal to 1 lbm or 0.4536 kg. or 1 N is equal to 0.2248 lbm or 0.1020 kg.

6.2.1 *Manual Rammer*—The rammer shall be equipped with a guide sleeve that has sufficient clearance that the free fall of the rammer shaft and head is not restricted. The guide sleeve shall have at least four vent holes at each end (eight holes total) located with centers ¾ ± 1/16-in. (19.0 ± 1.6-mm) from each end and spaced 90 degrees apart. The minimum diameter of the vent holes shall be ⅜-in. (9.5-mm). Additional holes or slots may be incorporated in the guide sleeve.

6.2.2 *Mechanical Rammer-Circular Face*—The rammer shall operate mechanically in such a manner as to provide uniform and complete coverage of the specimen surface. There shall be 0.10 ± 0.03-in. (2.5 ± 0.8-mm) clearance between the rammer and the inside surface of the mold at its smallest diameter. The mechanical rammer shall meet the calibration requirements of Test Methods D 2168. The mechanical rammer shall be equipped with a positive mechanical means to support the rammer when not in operation.

6.2.2.3 *Mechanical Rammer-Sector Face*—When used with the 6-in. (152.4-mm) mold, a sector face rammer may be used in place of the circular face rammer. The specimen contact face shall have the shape of a sector of a circle of radius equal to 2.90 ± 0.02-in. (73.7 ± 0.5-mm). The rammer shall operate in such a manner that the vertex of the sector is positioned at the center of the specimen.

6.3 *Sample Extruder (optional)*—A jack, frame or other device adapted for the purpose of extruding compacted specimens from the mold.

6.4 *Balance*—A class GP5 balance meeting the requirements of Specification D 4753 for a balance of 1-g readability.

6.5 *Drying Oven*—Thermostatically controlled, preferably of a forced-draft type and capable of maintaining a uniform temperature of 230 ± 9°F (110 ± 5°C) throughout the drying chamber.

6.6 *Straightedge*—A stiff metal straightedge of any convenient length but not less than 10-in. (254-mm). The total length of the straightedge shall be machined straight to a tolerance of ±0.005-in. (±0.1-mm). The scraping edge shall be beveled if it is thicker than ⅛-in. (3-mm).

6.7 *Sieves*—¾-in. (19.0-mm), ⅜-in. (9.5-mm), and No. 4 (4.75-mm), conforming to the requirements of Specification E 11.

6.8 *Mixing Tools*—Miscellaneous tools such as mixing pan, spoon, trowel, spatula, etc., or a suitable mechanical device for thoroughly mixing the sample of soil with increments of water.

1.7 *This standard does not purport to address all of the safety problems, if any, associated with its use. It is the responsibility of the user of this standard to establish appropriate safety and health practices and determine the applicability of regulatory limitations prior to use.*

2. Referenced Documents

2.1 *ASTM Standards:*

C 127 Test Method for Specific Gravity and Absorption of Coarse Aggregate[2]

C 136 Method for Sieve Analysis of Fine and Coarse Aggregate[2]

D 422 Test Method for Particle Size Analysis of Soils[3]

D 653 Terminology Relating to Soil, Rock, and Contained Fluids[3]

D 854 Test Method for Specific Gravity of Soils[3]

D 1557 Test Methods for Moisture-Density Relations of Soils and Soil Aggregate Mixtures Using 10-lb (4.54-kg.) Rammer and 18-in. (457 mm) Drop[3]

D 2168 Test Methods for Calibration of Laboratory Mechanical-Rammer Soil Compactors[3]

D 2216 Test Method for Laboratory Determination of Water (Moisture) Content of Soil, Rock and Soil-Aggregate Mixtures[3]

D 2487 Test Method for Classification of Soils for Engineering Purposes[3]

D 2488 Practice for Description of Soils (Visual-Manual Procedure)[3]

D 4220 Practices for Preserving and Transporting Soil Samples[3]

D 4253 Test Methods for Maximum Index Density of Soils Using a Vibratory Table[3]

D 4718 Practice for Correction of Unit Weight and Water Content for Soils Containing Oversize Particles[3]

D 4753 Specification for Evaluating, Selecting and Specifying Balances and Scales For Use in Soil and Rock Testing[3]

E 1 Specification for ASTM Thermometers[4]

E 11 Specification for Wire-Cloth Sieves for Testing Purposes[5]

E 319 Practice for the Evaluation of Single-Pan Mechanical Balances[5]

E 380 Practice for Use of the International System of Units (SI) (the Modernized Metric System)[5]

3. Terminology

3.1 *Definitions*—See Terminology D 653 for general definitions.

3.2 *Description of Terms Specific to This Standard:*

3.2.1 *oversize fraction (coarse fraction), P_c* in %—the portion of total sample not used in performing the compaction test; it may be the portion of total sample retained on the No. 4 (4.75-mm), 3/8-in. (9.5-mm), or 3/4-in. (19.0-mm) sieve.

3.2.2 *standard effort*—the term for the 12,400 ft-lbf/ft^3 (600 kN-m/m^3) compactive effort applied by the equipment and procedures of this test.

3.2.3 *standard maximum dry unit weight, γ_{dmax}* in lbf/ft^3 (kN/m^3)—the maximum value defined by the compaction curve for a compaction test using standard effort.

3.2.4 *standard optimum water content, w_o* in %—the water content at which a soil can be compacted to the maximum dry unit weight using standard compactive effort.

3.2.5 *test fraction (finer fraction), P_F* in %—the portion of the total sample used in performing the compaction test; it is the fraction passing the No. 4 (4.75-mm) sieve in Procedure A, minus 3/8-in. (9.5-mm) sieve in Procedure B, or minus 3/4-in. (19.0-mm) sieve in Procedure C.

4. Summary of Test Method

4.1 A soil at a selected water content is placed in three layers into a mold of given dimensions, with each layer compacted by 25 or 56 blows of a 5.5-lbf (24.4-N) rammer dropped from a distance of 12-in. (305-mm), subjecting the soil to a total compactive effort of about 12,400 ft-lbf/ft^3 (600 kN-m/m^3). The resulting dry unit weight is determined. The procedure is repeated for a sufficient number of water contents to establish a relationship between the dry unit weight and the water content for the soil. This data, when plotted, represents a curvilinear relationship known as the compaction curve. The values of optimum water content and standard maximum dry unit weight are determined from the compaction curve.

5. Significance and Use

5.1 Soil placed as engineering fill (embankments, foundation pads, road bases) is compacted to a dense state to obtain satisfactory engineering properties such as, shear strength, compressibility, or permeability. Also, foundation soils are often compacted to improve their engineering properties. Laboratory compaction tests provide the basis for determining the percent compaction and water content needed to achieve the required engineering properties, and for controlling construction to assure that the required compaction and water contents are achieved.

5.2 During design of an engineered fill, shear, consolidation, permeability, or other tests require preparation of test specimens by compacting at some water content to some unit weight. It is common practice to first determine the optimum water content (w_o) and maximum dry unit weight (γ_{dmax}) by means of a compaction test. Test specimens are compacted at a selected water content (w), either wet or dry of optimum (w_o) or at optimum (w_o), and at a selected dry unit weight related to a percentage of maximum dry unit weight (γ_{dmax}). The selection of water content (w), either wet or dry of optimum (w_o) or at optimum (w_o) and the dry unit weight (γ_{dmax}) may be based on past experience, or a range of values may be investigated to determine the necessary percent of compaction.

6. Apparatus

6.1 *Mold Assembly*—The molds shall be cylindrical in shape, made of rigid metal and be within the capacity and dimensions indicated in 6.1.1 or 6.1.2 and Figs. 1 and 2. The walls of the mold may be solid, split, or tapered. The "split" type may consist of two half-round sections, or a section of

[2] *Annual Book of ASTM Standards*, Vol 04.02.
[3] *Annual Book of ASTM Standards*, Vol 04.08.
[4] *Annual Book of ASTM Standards*, Vol 14.03.
[5] *Annual Book of ASTM Standards*, Vol 14.02.

7. Calibration

7.1 Perform calibrations before initial use, after repairs or other occurrences that might affect the test results, at intervals not exceeding 1,000 test specimens, or annually, whichever occurs first, for the following apparatus:

7.1.2 *Balance*—Evaluate in accordance with Specification D 4753.

7.1.3 *Molds*—Determine the volume as described in Annex 1.

7.1.4 *Manual Rammer*—Verify the free fall distance, rammer mass, and rammer face in accordance with Section 6.2. Verify the guide sleeve requirements in accordance with Section 6.2.1.

7.1.5 *Mechanical Rammer*—Calibrate and adjust the mechanical rammer in accordance with Test Methods D 2168. In addition, the clearance between the rammer and the inside surface of the mold shall be verified in accordance with 6.2.2.

8. Test Sample

8.1 The required sample mass for Procedures A and B is approximately 35-lbm (16-kg), and for Procedure C is approximately 65-lbm (29-kg) of dry soil. Therefore, the field sample should have a moist mass of at least 50-lbm (23-kg) and 100-lbm (45-kg), respectively.

8.2 Determine the percentage of material retained on the No. 4 (4.75-mm), ⅜-in. (9.5-mm), or ¾-in. (19.0-mm) sieve as appropriate for choosing Procedure A, B, or C. Make this determination by separating out a representative portion from the total sample and determining the percentages passing the sieves of interest by Test Methods D 422 or Method C 136. It is only necessary to calculate percentages for the sieve or sieves for which information is desired.

9. Preparation of Apparatus

9.1 Select the proper compaction mold in accordance with the procedure (A, B, or C) being used. Determine and record its mass to the nearest gram. Assemble the mold, base and extension collar. Check the alignment of the inner wall of the mold and mold extension collar. Adjust if necessary.

9.2 Check that the rammer assembly is in good working condition and that parts are not loose or worn. Make any necessary adjustments or repairs. If adjustments or repairs are made, the rammer must be recalibrated.

10. Procedure

10.1 *Soils:*

10.1.1 Do not reuse soil that has been previously laboratory compacted.

10.1.2 When using this test method for soils containing hydrated halloysite, or where past experience with a particular soil indicates that results will be altered by air drying, use the moist preparation method (see 10.2).

10.1.3 Prepare the soil specimens for testing in accordance with 10.2 (preferred) or with 10.3.

10.2 *Moist Preparation Method (preferred)*—Without previously drying the sample, pass it through a No. 4 (4.75-mm), ⅜-in. (9.5-mm), or ¾-in. (19.0-mm) sieve, depending on the procedure (A, B, or C) being used. Determine the water content of the processed soil.

10.2.1 Prepare at least four (preferably five) specimens having water contents such that they bracket the estimated optimum water content. A specimen having a water content close to optimum should be prepared first by trial additions of water and mixing (see Note 6). Select water contents for the rest of the specimens to provide at least two specimens wet and two specimens dry of optimum, and water contents varying by about 2 %. At least two water contents are necessary on the wet and dry side of optimum to accurately define the dry unit weight compaction curve (see 10.5). Some soils with very high optimum water content or a relatively flat compaction curve may require larger water content increments to obtain a well defined maximum dry unit weight. Water content increments should not exceed 4 %.

NOTE 6—With practice it is usually possible to visually judge a point near optimum water content. Typically, soil at optimum water content can be squeezed into a lump that sticks together when hand pressure is released, but will break cleanly into two sections when "bent". At water contents dry of optimum soils tend to crumble; wet of optimum soils tend to stick together in a sticky cohesive mass. Optimum water content is typically slightly less than the plastic limit.

10.2.2 Use approximately 5-lbm (2.3-kg) of the sieved soil for each specimen to be compacted using Procedure A or B, or 13-lbm (5.9-kg) using Procedure C. To obtain the specimen water contents selected in 10.2.1, add or remove the required amounts of water as follows: to add water, spray it into the soil during mixing; to remove water, allow the soil to dry in air at ambient temperature or in a drying apparatus such that the temperature of the sample does not exceed 140°F (60°C). Mix the soil frequently during drying to maintain an even water content distribution. Thoroughly mix each specimen to ensure even distribution of water throughout and then place in a separate covered container and allow to stand in accordance with Table 1 prior to compaction. For the purpose of selecting a standing time, the soil may be classified using Test Method D 2487, Practice D 2488 or data on other samples from the same material source. For referee testing, classification shall be by Test Method D 2487.

10.3 *Dry Preparation Method*—If the sample is too damp to be friable, reduce the water content by air drying until the material is friable. Drying may be in air or by the use of drying apparatus such that the temperature of the sample does not exceed 140°F (60°C). Thoroughly break up the aggregations in such a manner as to avoid breaking individual particles. Pass the material through the appropriate sieve: No. 4 (4.75-mm), ⅜-in. (9.5-mm), or ¾-in. (19.0-mm). When preparing the material by passing over the ¾-in. sieve for compaction in the 6-in. mold, break up aggregations sufficiently to at least pass the ⅜-in. sieve in order to facilitate the distribution of water throughout the soil in later mixing.

10.3.1 Prepare at least four (preferably five) specimens in accordance with 10.2.1.

10.3.2 Use approximately 5-lbm (2.3-kg) of the sieved soil for each specimen to be compacted using Procedure A or B,

TABLE 1 Required Standing Times of Moisturized Specimens

Classification	Minimum Standing Time, h
GW, GP, SW, SP	No Requirement
GM, SM	3
All other soils	16

TABLE 2 Metric Equivalents for Figs. 1 and 2

in.	mm
0.016	0.41
0.026	0.66
0.032	0.81
0.028	0.71
½	12.70
2½	63.50
2⅝	66.70
4	101.60
4½	114.30
4.584	116.43
4¾	120.60
6	152.40
6½	165.10
6⅝	168.30
6¾	171.40
8¼	209.60
ft³	**cm³**
1/30 (0.0333)	943
0.0005	14
1/13.333 (0.0750)	2,124
0.0011	31

or 13-lbm (5.9-kg) using Procedure C. Add the required amounts of water to bring the water contents of the specimens to the values selected in 10.3.1. Follow the specimen preparation procedure specified in 10.2.2 for drying the soil or adding water into the soil and curing each test specimen.

10.4 *Compaction*—After curing, if required, each specimen shall be compacted as follows:

10.4.1 Determine and record the mass of the mold or mold and base plate.

10.4.2 Assemble and secure the mold and collar to the base plate. The mold shall rest on a uniform rigid foundation, such as provided by a cylinder or cube of concrete with a mass of not less than 200-lbm (91-kg). Secure the base plate to the rigid foundation. The method of attachment to the rigid foundation shall allow easy removal of the assembled mold, collar and base plate after compaction is completed.

10.4.3 Compact the specimen in three layers. After compaction, each layer should be approximately equal in thickness. Prior to compaction, place the loose soil into the mold and spread into a layer of uniform thickness. Lightly tamp the soil prior to compaction until it is not in a fluffy or loose state, using either the manual compaction rammer or a 2-in. (5-mm) diameter cylinder. Following compaction of each of the first two layers, any soil adjacent to the mold walls that has not been compacted or extends above the compacted surface shall be trimmed. The trimmed soil may be included with the additional soil for the next layer. A knife or other suitable device may be used. The total amount of soil used shall be such that the third compacted layer slighly extends into the collar, but does not exceed ¼-in. (6-mm) above the top of the mold. If the third layer does extend above the top of the mold by more than ¼-in. (6-mm), the specimen shall be discarded. The specimen shall be discarded when the last blow on the rammer for the third layer results in the bottom of the rammer extending below the top of the compaction mold.

10.4.4 Compact each layer with 25 blows for the 4-in. (101.6-mm) mold or with 56 blows for the 6-in. (152.4-mm) mold.

NOTE 7—When compacting specimens wetter than optimu[illegible] content, uneven compacted surfaces can occur and operator ju[illegible] is required as to the average height of the specimen.

10.4.5 In operating the manual rammer, take care to avoid lifting the guide sleeve during the rammer upstroke. Hold the guide sleeve steady and within 5° of vertical. Apply the blows at a uniform rate of approximately 25 blows/min and in such a manner as to provide complete, uniform coverage of the specimen surface.

10.4.6 Following compaction of the last layer, remove the collar and base plate from the mold, except as noted in 10.4.7. A knife may be used to trim the soil adjacent to the collar to loosen the soil from the collar before removal to avoid disrupting the soil below the top of the mold.

10.4.7 Carefully trim the compacted specimen even with the top of the mold by means of the straightedge scraped across the top of the mold to form a plane surface even with the top of the mold. Initial trimming of the specimen above the top of the mold with a knife may prevent the soil from tearing below the top of the mold. Fill any holes in the top surface with unused or trimmed soil from the specimen, press in with the fingers, and again scrape the straightedge across the top of the mold. Repeat the appropriate preceding operations on the bottom of the specimen when the mold volume was determined without the base plate. For very wet or dry soils, soil or water may be lost if the base plate is removed. For these situations, leave the base plate attached to the mold. When the base plate is left attached, the volume of the mold must be calibrated with the base plate att[illegible]d to the mold rather than a plastic or glass plate as n[illegible] Annex 1, A1.4.

10.4.8 Determine and record the mass of the specimen and mold to the nearest gram. When the base plate is left attached, determine and record the mass of the specimen, mold and base plate to the nearest gram.

10.4.9 Remove the material from the mold. Obtain a specimen for water content by using either the whole specimen (preferred method) or a representative portion. When the entire specimen is used, break it up to facilitate drying. Otherwise, obtain a portion by slicing the compacted specimen axially through the center and removing about 500-g of material from the cut faces. Obtain the water content in accordance with Test Method D 2216.

10.5 Following compaction of the last specimen, compare the wet unit weights to ensure that a desired pattern of obtaining data on each side of the optimum water content will be attained for the dry unit weight compaction curve. Plotting the wet unit weight and water content of each compacted specimen can be an aid in making the above evaluation. If the desired pattern is not obtained, additional compacted specimens will be required. Generally, one water content value wet of the water content defining the maximum wet unit weight is sufficient to ensure data on the wet side of optimum water content for the maximum dry unit weight.

11. Calculation

11.1 Calculate the dry unit weight and water con[illegible] each compacted specimen as explained in 11.3 and 11.[illegible] the values and draw the compaction curve as a smooth curve through the points (see example, Fig. 3). Plot dry unit weight

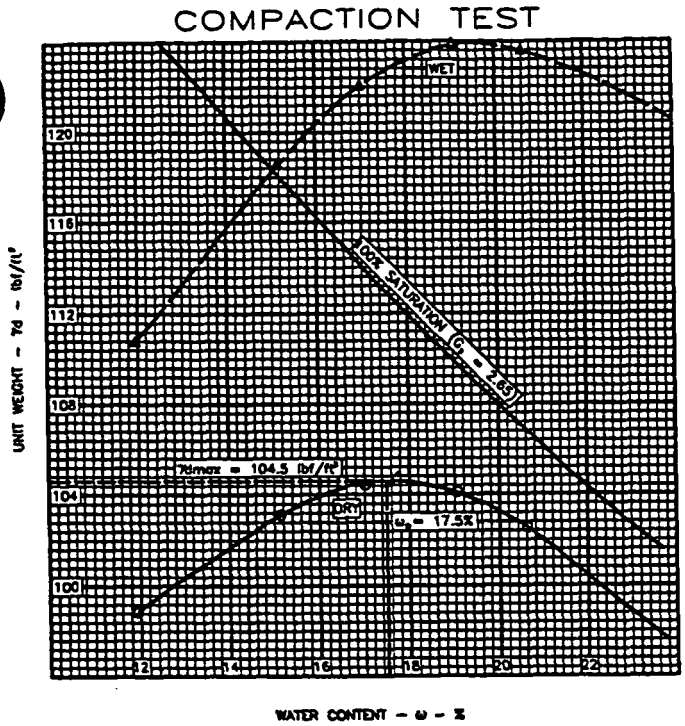

FIG. 3 Example Compaction Curve Plotting

to the nearest 0.1 lbf/ft³ (0.2 kN/m³) and water content to the nearest 0.1 %. From the compaction curve, determine the optimum water content and maximum dry unit weight. If more than 5 % by weight of oversize material was removed from the sample, calculate the corrected optimum water content and maximum dry unit weight of the total material using Practice D 4718. This correction may be made to the appropriate field in place density test specimen rather than to the laboratory test specimen.

11.2 Plot the 100 % saturation curve. Values of water content for the condition of 100 % saturation can be calculated as explained in 11.5 (see example, Fig. 3).

NOTE 8—The 100 % saturation curve is an aid in drawing the compaction curve. For soils containing more than approximately 10 % fines at water contents well above optimum, the two curves generally become roughly parallel with the wet side of the compaction curve between 92 % to 95 % saturation. Theoretically, the compaction curve cannot plot to the right of the 100 % saturation curve. If it does, there is an error in specific gravity, in measurements, in calculations, in test procedures, or in plotting.

NOTE 9—The 100 % saturation curve is sometimes referred to as the zero air voids curve or the complete saturation curve.

11.3 *Water Content, w*—Calculate in accordance with Test Method D 2216.

11.4 *Dry Unit Weights*—Calculate the moist density (Eq. 1), the dry density (Eq. 2), and then the dry unit weight (Eq. 3) as follows:

$$\rho_m = 1000(M_t - M_{md})/V \quad (1)$$

where:

ρ_m = moist density of compacted specimen, Mg/m³,
M_t = mass of moist specimen and mold, kg,
M_{md} = mass of compaction mold, kg, and
V = volume of compaction mold, m³ (see Annex 1)

$$\rho_d = \rho_m/(1 + w/100) \quad (2)$$

where:

ρ_d = dry density of compacted specimen, Mg/m³, and
w = water content, %.

$$\gamma_d = 62.43\ \rho_d \text{ in lbf/ft}^3 \quad (3)$$

or

$$\gamma_d = 9.807\ \rho_d \text{ in kN/m}^3$$

where:

γ_d = dry unit weight of compacted specimen.

11.5 To calculate points for plotting the 100 % saturation curve or zero air voids curve select values of dry unit weight, calculate corresponding values of water content corresponding to the condition of 100 % saturation as follows:

$$w_{sat} \frac{(\gamma_w)(G_s) - \gamma_d}{(\gamma_d)(G_s)} \times 100 \quad (4)$$

where:

w_{sat} = water content for complete saturation, %,
γ_w = unit weight of water, 62.43 lbf/ft³ (9.807 kn/m³),
γ_d = dry unit weight of soil, and
G_s = specific gravity of soil.

NOTE 10—Specific gravity may be estimated for the test specimen on the basis of test data from other samples of the same soil classification and source. Otherwise, a specific gravity test (Test Method C 127, Test Method D 854, or both) is necessary.

12. Report

12.1 The report shall contain the following information:

12.1.1 Procedure used (A, B, or C).

12.1.2 Preparation method used (moist or dry).

12.1.3 As received water content if determined.

12.1.4 Standard optimum water content, to the nearest 0.5 %.

12.1.5 Standard maximum dry unit weight, to the nearest 0.5 lbf/ft³.

12.1.6 Description of rammer (manual or mechanical).

12.1.7 Soil sieve data when applicable for determination of procedure (A, B, or C) used.

12.1.8 Description of material used in test, by Practice D 2488, or classification by Test Method D 2487.

12.1.9 Specific gravity and method of determination.

12.1.10 Origin of material used in test, for example, project, location, depth, and the like.

12.1.11 Compaction curve plot showing compaction points used to establish compaction curve, and 100 % saturation curve, point of maximum dry unit weight and optimum water content.

12.1.12 Oversize correction data if used, including the oversize fraction (coarse fraction), P_c in %.

13. Precision and Bias

13.1 *Precision*—Data are being evaluated to determine the precision of this test method. In addition, pertinent data is being solicited from users of the test method.

13.2 *Bias*—It is not possible to obtain information on bias because there is no other method of determining the values of standard maximum dry unit weight and optimum water content.

14. Keywords

14.1 NT—impact compaction using standard effort; RT—density; RT—moisture-density curves; RT—pr[illegible] test; UF—compaction characteristics; UF—soil compa[illegible] USE—laboratory tests

ANNEX

(Mandatory Information)

A1. VOLUME OF COMPACTION MOLD

A1.1 Scope

A1.1.1 This annex describes the procedure for determining the volume of a compaction mold.

A1.1.2 The volume is determined by a water-filled method and checked by a linear-measurement method.

A1.2 Apparatus

A1.2.1 In addition to the apparatus listed in Section 6 the following items are required:

A1.2.1.1 *Vernier or Dial Caliper*—having a measuring range of at least 0 to 6 in. (0 to 150 mm) and readable to at least 0.001 in. (0.02 mm).

A1.2.1.2 *Inside Micrometer*—having a measuring range of at least 2 to 12 in. (50 to 300 mm) and readable to at least 0.001 in. (0.02 mm).

A1.2.1.3 *Plastic or Glass Plates*—Two plastic or glass plates approximately 8 in. square by ¼ in. thick (200 by 200 mm by 6 mm).

A1.2.1.4 *Thermometer*—0 to 50°C range, 0.5°C graduations, conforming to the requirements of Specification E 1.

A1.2.1.5 *Stopcock grease* or similar sealant.

A1.2.1.6 *Miscellaneous equipment*—Bulb syringe, towels, etc.

A1.3 Precautions

A1.3.1 Perform this procedure in an area isolated from drafts or extreme temperature fluctuations.

A1.4 Procedure

A1.4.1 *Water-Filling Method:*

A1.4.1.1 Lightly grease the bottom of the compaction mold and place it on one of the plastic or glass plates. Lightly grease the top of the mold. Be careful not to get grease on the inside of the mold. If it is necessary to use the base plate, as noted in 10.4.7, place the greased mold onto the base plate and secure with the locking studs.

A1.4.1.2 Determine the mass of the greased mold and both plastic or glass plates to the nearest 0.01-lbm (1-g) and record. When the base plate is being used in lieu of the bottom plastic or glass plate determine the mass of the mold, base plate and a single plastic or glass plate to be used on top of the mold to the nearest 0.01-lbm (1-g) and record.

A1.4.1.3 Place the mold and the bottom plastic or glass plate on a firm, level surface and fill the mold with water to slightly above its rim.

A1.4.1.4 Slide the second plate over the top surface of the mold so that the mold remains completely filled with water and air bubbles are not entrapped. Add or remove water as necessary with a bulb syringe.

A1.4.1.5 Completely dry any excess water from the outside of the mold and plates.

A1.4.1.6 Determine the mass of the mold, plates and water and record to the nearest 0.01-lbm (1-g).

A1.4.1.7 Determine the temperature of the water in the mold to the nearest 1°C and record. Determine and record the absolute density of water from Table A1.1.

A1.4.1.8 Calculate the mass of water in the mold by subtracting the mass determined in A1.4.1.2 from the mass determined in A1.4.1.6.

A1.4.1.9 Calculate the volume of water by dividing the mass of water by the density of water and record to the nearest 0.0001 ft^3 (1 cm^3).

A1.4.1.10 When the base plate is used for the calibration of the mold volume repeat A1.4.1.3 through A1.4.1.9.

A1.4.2 *Linear Measurement Method:*

A1.4.2.1 Using either the vernier caliper or the inside micrometer, measure the diameter of the mold 6 times at the top of the mold and 6 times at the bottom of the [illegible] spacing each of the six top and bottom measure[illegible] equally around the circumference of the mold. Record the values to the nearest 0.001-in. (0.02-mm).

A1.4.2.2 Using the vernier caliper, measure the inside height of the mold by making three measurements equally spaced around the circumference of the mold. Record values to the nearest 0.001-in. (0.02-mm).

A1.4.2.3 Calculate the average top diameter, average bottom diameter and average height.

A1.4.2.4 Calculate the volume of the mold and record to the nearest 0.0001 ft^3 (1 cm^3) as follows:

$$V = \frac{(\pi)(h)(d_t + d_b)^2}{(16)(1728)} \text{ (inch-pound)}$$

$$V = \frac{(\pi)(h)(d_t + d_b)^2}{(16)(10^3)} \text{ (SI)}$$

TABLE A1 Density of Water[A]

Temperature, °C (°F)	Density of Water, g/ml
18 (64.4)	0.99862
19 (66.2)	0.99843
20 (68.0)	0.99823
21 (69.8)	0.99802
22 (71.6)	0.99779
23 (73.4)	0.99756
24 (75.2)	0.99733
25 (77.0)	0.99707
26 (78.8)	0.99681

[A] Values other than shown may be obtained by referring to the Handbook of Chemistry and Physics, Chemical Rubber Publishing Co., Cleveland, Ohio.

where:

V = volume of mold, ft^3 (cm^3),
h = average height, in. (mm),
d_t = average top diameter, in. (mm),
d_b = average bottom diameter, in. (mm),
$1/1728$ = constant to convert in^3 to ft^3, and
$1/10^3$ = constant to convert mm^3 to cm^3.

A1.5 Comparison of Results

A1.5.1 The volume obtained by either method should be within the volume tolerance requirements of 6.1.1 and 6.1.2.

A1.5.2 The difference between the two methods should not exceed 0.5 % of the nominal volume of the mold.

A1.5.3 Repeat the determination of volume if these criteria are not met.

A1.5.4 Failure to obtain satisfactory agreement between the two methods, even after several trials, is an indication that the mold is badly deformed and should be replaced.

A1.5.5 Use the volume of the mold determined using the water-filling method as the assigned volume value for calculating the moist and dry density (see 11.4).

The American Society for Testing and Materials takes no position respecting the validity of any patent rights asserted in connection with any item mentioned in this standard. Users of this standard are expressly advised that determination of the validity of any such patent rights, and the risk of infringement of such rights, are entirely their own responsibility.

This standard is subject to revision at any time by the responsible technical committee and must be reviewed every five years and if not revised, either reapproved or withdrawn. Your comments are invited either for revision of this standard or for additional standards and should be addressed to ASTM Headquarters. Your comments will receive careful consideration at a meeting of the responsible technical committee, which you may attend. If you feel that your comments have not received a fair hearing you should make your views known to the ASTM Committee on Standards, 1916 Race St., Philadelphia, PA 19103.

Standard Test Method for Specific Gravity of Soils[1]

This standard is issued under the fixed designation D 854; the number immediately following the designation indicates the year of original adoption or, in the case of revision, the year of last revision. A number in parentheses indicates the year of last reapproval. A superscript epsilon (ε) indicates an editorial change since the last revision or reapproval.

1. Scope

1.1 This test method covers the determination of the specific gravity of soils that pass the 4.75-mm (No. 4) sieve, by means of a pycnometer. When the soil contains particles larger than the 4.75-mm sieve, Test Method C 127 shall be used for the material retained on the 4.75-mm sieve and this test method shall be used for the material passing the 4.75-mm sieve.

1.1.1 Two procedures for performing the specific gravity are provided as follows:

1.1.1.1 *Method A*—Procedure for Oven-Dry Specimens, described in 9.1.

1.1.1.2 *Method B*—Procedure for Moist Specimens, described in 9.2. The procedure to be used shall be specified by the requesting authority. For specimens of organic soils and highly plastic, fine-grained soils, Procedure B shall be the preferred method.

1.2 When the specific gravity value is to be used in calculations in connection with the hydrometer portion of Test Method D 422, it is intended that the specific gravity test be made on that portion of the sample which passes the 2.00-mm (No. 10) sieve.

1.3 The values stated in acceptable metric units are to be regarded as standard.

1.4 *This standard does not purport to address all of the safety problems, if any, associated with its use. It is the responsibility of the user of this standard to establish appropriate safety and health practices and determine the applicability of regulatory limitations prior to use.*

2. Referenced Documents

2.1 *ASTM Standards:*

C 127 Test Method for Specific Gravity and Absorption of Coarse Aggregate[2]

C 670 Practice for Preparing Precision and Bias Statements for Test Methods for Construction Materials[2]

D 422 Test Method for Particle-Size Analysis of Soils[3]

D 653 Terminology Relating to Soil, Rock, and Contained Fluids[3]

D 2487 Test Method for Classification of Soils for Engineering Purposes[3]

D 4753 Specification for Evaluating, Selecting, and Specifying Balances and Scales for Use in Soil and Rock Testing[3]

E 1 Specification for ASTM Thermometers[4]

E 11 Specification for Wire-Cloth Sieves for Testing Purposes[5]

E 12 Terminology Relating to Density and Specific Gravity of Solids, Liquids, and Gases[6]

2.2 *AASHTO Standards:*[7]

AASHTO Test Method T100

3. Terminology

3.1 All definitions are in accordance with Terminology D 653 and E 12.

3.2 *Description of Term Specific to This Standard:*

3.2.1 *specific gravity*—the ratio of the mass of a unit volume of a material at a stated temperature to the mass of the same volume of gas-free distilled water at a stated temperature.

4. Significance and Use

4.1 The specific gravity of a soil is used in calculating phase relationships of soils (that is, the relative volumes of solids to water and air in a given volume of soil).

4.2 The term solid particles is typically assumed to mean naturally occurring mineral particles that are not readily soluble in water. Therefore, the specific gravity of materials containing extraneous matter (such as cement, lime, and the like), water-soluble matter (such as sodium chloride), and soils containing matter with a specific gravity less than one, typically require special treatment or a qualified definition of their specific gravity.

5. Apparatus

5.1 *Pycnometer*—The pycnometer shall be one of the following:

5.1.1 *Volumetric Flask*, having a capacity of at least 100 mL.

5.1.2 *Stoppered Bottle*, having a capacity of at least 50 mL. The stopper shall be of the same material, and shall permit the emission of air and surplus water when it is put in place.

NOTE 1—Flask sizes of greater than the specified minimum capacity are recommended. Larger flasks are capable of holding larger specimens and tend to produce better statistical results.

---

[1] This test method is under the jurisdiction of ASTM Committee D-18 on Soil and Rock and is the direct responsibility of Subcommittee D18.03 on Texture, Plasticity and Density Characteristics of Soils.

Current edition approved Nov. 15, 1992. Published January 1993. Originally published as D 854 – 45. Last previous edition D 854 – 91.

[2] *Annual Book of ASTM Standards*, Vol 04.02.

[3] *Annual Book of ASTM Standards*, Vol 04.08.

[4] *Annual Book of ASTM Standards*, Vol 14.03.

[5] *Annual Book of ASTM Standards*, Vol 14.02.

[6] *Annual Book of ASTM Standards*, Vol 15.05.

[7] Available from American Association of State Highway and Transportation Officials, 444 N Capital St., NW, Washington, DC 20001.

000261

5.2 *Balance*—Meeting the requirements of Specification D 4753 and readable, without estimation, to at least 0.1 % of the specimen mass.

5.3 *Drying Oven*—Thermostatically-controlled oven, capable of maintaining a uniform temperature of 110 ± 5°C (230 ± 9°F) throughout the drying chamber.

5.4 *Thermometer*, capable of measuring the temperature range within which the test is being performed, graduated in a 0.5°C (1.0°F) division scale and meeting the requirements of Specification E 1.

5.5 *Desiccator*—A desiccator cabinet or large desiccator jar of suitable size containing silica gel or anhydrous calcium sulfate.[8]

NOTE 2—It is preferable to use a desiccant that changes color to indicate when it needs reconstitution.

5.6 *Entrapped Air Removal Apparatus*—To remove entrapped air, use one of the following:

5.6.1 *Hot Plate or Bunsen Burner*, capable of maintaining a temperature adequate to boil water.

5.6.2 *Vacuum System*, a vacuum pump or water aspirator, capable of producing a partial vacuum of 100 min or less absolute pressure.

NOTE 3—A partial vacuum of 100 mm Hg absolute pressure is approximately equivalent to a 660 mm (26 in.) Hg reading on vacuum gauge at sea level.

5.7 *Miscellaneous Equipment*, specimen dishes and insulated gloves.

6. Reagents and Materials

6.1 *Purity of Water*—Where distilled water is referred to in this test method, either distilled or demineralized water may be used.

7. Test Specimen

7.1 The test specimen may be oven-dried or moistened soil and shall be representative of the total sample. In either case the specimen shall be large enough that its minimum mass in the oven-dried state is in accordance with the following:

Maximum Particle Size (100 % passing)	Standard Sieve Size	Minimum Mass of Test Specimen, g
2 mm	No. 10	20
4.75 mm	No. 4	100

8. Calibration of Pycnometer

8.1 Determine and record the mass of a clean, dry pycnometer, M_f.

8.2 Fill the pycnometer with distilled water to the calibration mark. Visually inspect the pycnometer and its contents to ensure that there are no air bubbles in the distilled water. Determine and record the mass of the pycnometer and water, M_a.

8.3 Insert a thermometer in the water, and determine and record its temperature, T_a, to the nearest 0.5°C (1.0°F).

8.4 From the mass, M_a, determined at the observed temperature, T_a, prepare a table of values of mass, M_a, for a series of temperatures that are likely to prevail when the mass of the pycnometer, soil, and water, M_b, is determined later. These values of M_a can be determined experimentally or may be calculated as follows:

$$M_a \text{ (at } T_x) = [(\text{density of water at } T_x/\text{density of water at } T_a) \times (M_a \text{ (at } T_a) - M_f)] + M_f$$

where:

M_a = mass of pycnometer and water, g,
M_f = mass of pycnometer, g,
T_a = observed temperature of water, °C, and
T_x = any other desired temperature, °C.

NOTE 4—This test method provides a procedure that is more convenient for laboratories making many determinations with the same pycnometer. It is equally applicable to a single determination. Bringing the pycnometer and contents to some designated temperature when masses M_a and M_b are taken, requires considerable time. It is important that masses M_a and M_b be based on water at the same temperature. Values for the density of water at temperatures from 16.0 to 30.0°C are given in Table 1.

9. Procedure

9.1 *Test Method A—Procedure For Oven-Dried Specimens:*

9.1.1 Dry the specimen to a constant mass in an oven maintained at 110 ± 5°C (230 ± 9°F) (See Note 5) and cool it in a desiccator.

NOTE 5—Drying of certain soils at 110°C (230°F) may bring about loss of water of composition or hydration, and in such cases drying may be done in reduced air pressure or at a lower temperature.

9.1.2 Determine and record the mass of a clean, dry, calibrated pycnometer, M_f. Select a pycnometer of sufficient capacity that the volume filled to the mark will be at least 50 percent greater than the space required to accommodate the test specimen. Place the specimen in the pycnometer.

TABLE 1 Density of Water and Correction Factor K for Various Temperatures

Temperature, °C	Density of Water (g/mL)	Correction Factor K
16.0	0.99897	1.0007
16.5	0.99889	1.0007
17.0	0.99880	1.0006
17.5	0.99871	1.0005
18.0	0.99862	1.0004
18.5	0.99853	1.0003
19.0	0.99843	1.0002
19.5	0.99833	1.0001
20.0	0.99823	1.0000
20.5	0.99812	0.9999
21.0	0.99802	0.9998
21.5	0.99791	0.9997
22.0	0.99780	0.9996
22.5	0.99768	0.9995
23.0	0.99757	0.9993
23.5	0.99745	0.9992
24.0	0.99732	0.9991
24.5	0.99720	0.9990
25.0	0.99707	0.9988
25.5	0.99694	0.9987
26.0	0.99681	0.9986
26.5	0.99668	0.9984
27.0	0.99654	0.9983
27.5	0.99640	0.9982
28.0	0.99626	0.9980
28.5	0.99612	0.9979
29.0	0.99597	0.9977
29.5	0.99582	0.9976
30.0	0.99567	0.9974

[8] Anhydrous calcium sulfate is sold under the trade name Drierite.

TABLE 2 Table of Precision Estimates[A]

Material and Type Index	Standard Deviation[B]		Acceptable Range of Two Results[C]	
	Passing No. 4 (4.75 mm)	Passing No. 10 (2.00 mm)	Passing No. 4 (4.75 mm)	Passing No. 10 (2.00 mm)
Single-operator precision:				
Cohesive soils	0.021	0.019	0.06	0.06
Noncohesive soils	a	a	a	a
Multilaboratory precision:				
Cohesive soils	0.056	0.041	0.16	0.12
Noncohesive soils	a	a	a	a

[A] The figures given in Columns 2 and 3 are the standard deviations that have been found to be appropriate for the materials described in Column 1. The figures given in Columns 4 and 5 are the limits that should not be exceeded by the difference between the two properly conducted tests.

[B] These numbers represent, respectively, the (1S) and (D2S) limits as described in Practice C 670.

[C] Criteria for assigning standard deviation values for noncohesive soils are not available at the present time.

Determine the mass of the specimen and pycnometer, and subtract the mass of the pycnometer, M_f, from this value to determine the mass of the oven-dry specimen, M_o.

9.1.3 Fill the pycnometer with distilled water to a level slightly above that required to cover the soil and soak the specimen for at least 12 h.

NOTE 6—For some soils containing a significant fraction of organic matter, kerosine is a better wetting agent than water and may be used in place of distilled water for oven-dried specimens. If kerosine is used, the entrapped air should only be removed by use of an aspirator. Kerosine is a flammable liquid that must be used with extreme caution.

NOTE 7—Adding distilled water to just cover the soil makes it easier to control boil-over during removal of entrapped air.

9.1.4 Remove the entrapped air by one of the following methods:

9.1.4.1 Boil the specimen gently for at least 10 min while agitating the pycnometer occasionally to assist in the removal of air. Then cool the heated specimen to room temperature.

9.1.4.2 Subject the contents to a vacuum (air pressure not exceeding 100 mm Hg) for at least 30 min (Note 8) either by connecting the pycnometer directly to an aspirator or vacuum pump or by use of a bell jar. While the vacuum is being applied, gently agitate the pycnometer periodically to assist in the removal of air. Some soils boil violently when subjected to reduced air pressure. It will be necessary in those cases to reduce the air pressure at a slower rate or to use a larger flask.

NOTE 8—Specimens with a high plasticity at the natural water content may require 6 to 8 h to remove entrapped air. Specimens with a low plasticity at the natural water content may require 4 to 6 h to remove entrapped air. Oven-dried specimens may require 2 to 4 h to remove entrapped air.

9.1.5 Fill the pycnometer to just below the calibration mark with distilled water at room temperature. Add the distilled water slowly and carefully to avoid the entrapment of air bubbles in the specimen (Note 9). Allow the pycnometer to obtain a uniform water temperature (Note 10).

NOTE 9—To avoid the entrapment of air bubbles, the distilled water can be introduced through a piece of small-diameter flexible tubing with its outlet end kept just below the surface of the distilled water in the pycnometer.

NOTE 10—To obtain a uniform water temperature the pycnometer may be allowed to sit overnight or be placed in a constant temperature bath.

9.1.6 Fill the pycnometer with distilled water at the same temperature to the mark, clean the outside, and dry with a clean, dry cloth. Determine and record the mass of the pycnometer filled with soil and water, M_b.

9.1.7 Insert a thermometer into the water, and determine and record its temperature, T_b, to the nearest 0.5°C (1.0°F).

9.2 *Test Method B—Procedure For Moist Specimens:*

9.2.1 Place the specimen in a calibrated pycnometer.

9.2.1.1 Disperse specimens of clay soils in distilled water before they are placed in the pycnometer, by use of the dispersing equipment specified in Test Method D 422. The minimum volume of slurry that can be prepared by this dispersing equipment is such that a 500-mL (or larger) flask is needed as a pycnometer.

9.2.2 Proceed as described in Sections 9.1.4 and 9.1.7.

9.2.3 Remove the specimen from the pycnometer, and dry it to a constant mass in an oven maintained at 110 ± 5°C (230 ± 9°F) (See Note 5). Cool the specimen in a desiccator.

9.2.4 Determine and record the mass of the oven-dried soil, M_o.

10. Calculation

10.1 Calculate the specific gravity of the soil, G, to the nearest 0.01, based on water at a temperature (T_b) as follows:

$$G \text{ at } T_b = M_o/[M_o + (M_a - M_b]$$

where:

M_o = mass of sample of oven-dry soil, g,
M_a = mass of pycnometer filled with water at temperature T_b (Note 11), g,
M_b = mass of pycnometer filled with water and soil at temperature T_b, g,
T_b = temperature of the contents of the pycnometer when mass M_b was determined, °C.

NOTE 11—This value can be obtained from the table of values of M_a, prepared in accordance with 6.2, for the temperatures prevailing when mass M_b was determined, °C.

NOTE 12—The equation shown in 9.1 is for computing the specific gravity of the soil tested in water. When kerosine is used, the Eq must be adjusted by multiplying the result by the specific gravity of kerosine at T_b and dividing it by the density of water at T_b.

10.2 Calculate the weighted average specific gravity for soils containing particles both larger and smaller than the 4.75-mm sieve using the following equation:

$$G_{avg} = \frac{1}{\frac{R_1}{100G_1} + \frac{P_1}{100G_2}}$$

where:

G_{avg} = weighted average specific gravity of soils composed of particles larger and smaller than the 4.75-mm sieve,
R_1 = percent of soil particles retained on 4.75-mm sieve,
P_1 = percent of soil particles passing the 4.75-mm sieve,
G_1 = apparent specific gravity of soil particles retained on the 4.75-mm sieve as determined by Test Method C 127, and

G_2 = specific gravity of soil particles passing the 4.75-mm sieve as determined by this test method.

10.3 Unless otherwise required, specific gravity (G) values reported shall be based on water at 20°C. Calculate the value based on water at 20°C from the value based on water at the observed temperature T_b, as follows:

$$G \text{ at } 20°C = K \times (G \text{ at } T_b)$$

where:

K = a number found by dividing the density of water at temperature T_b by the density of water at 20°C. Values for the range of temperatures are given in Table 1.

10.4 In some cases, it is desired to report the specific gravity value based on water at a different temperature. In these cases, the specific gravity value, based on any temperature T_x, may be calculated as follows:

$$G \text{ at } T_x = \frac{G \text{ at } 20°C}{K}$$

11. Report

11.1 The report (data sheet) shall include the following:

11.1.1 Identification of the sample (material) being tested, such as boring number, sample number, test number, etc.

11.1.2 Specific gravity at 20°C to the nearest 0.01. Test procedure used (A or B).

11.1.3 Maximum particle size of the test specimen.

11.1.4 Specific gravity to the nearest 0.01 at a specified temperature other than 20°C, if applicable.

11.1.5 Type of fluid used, if other than distilled water.

11.1.6 When any portion of the original sample of soil is eliminated in the preparation of the test specimen, the portion on which the test has been made shall be reported.

12. Precision and Bias

12.1 *Precision*—Criteria for judging the acceptability of specific gravity test results obtained by this test method on material passing the 4.75-mm sieve are given as follows:

12.2 *Statement of Precision*—Criteria for judging the acceptability of specific gravity test results obtained by this test method on material passing the 4.75 (No. 4) or 2.00 mm (No. 10) sieve are given in Table 2. The estimates of precision for material passing the 2.00 mm sieve are based on results from the AASHTO Materials Reference Laboratory (AMRL) Proficiency Sample Program, of testing conducted on material passing the 2.00 (No. 10) sieve by this test method and AASHTO Test Method T100.

12.3 *Bias*—There is no acceptable reference value for this test method; therefore, bias cannot be determined.

13. Keywords

13.1 soil; specific gravity

The American Society for Testing and Materials takes no position respecting the validity of any patent rights asserted in connection with any item mentioned in this standard. Users of this standard are expressly advised that determination of the validity of any such patent rights, and the risk of infringement of such rights, are entirely their own responsibility.

This standard is subject to revision at any time by the responsible technical committee and must be reviewed every five years and if not revised, either reapproved or withdrawn. Your comments are invited either for revision of this standard or for additional standards and should be addressed to ASTM Headquarters. Your comments will receive careful consideration at a meeting of the responsible technical committee, which you may attend. If you feel that your comments have not received a fair hearing you should make your views known to the ASTM Committee on Standards, 1916 Race St., Philadelphia, PA 19103.

Designation: D 1452 – 80 (Reapproved 1990)[ε1]

Standard Practice for Soil Investigation and Sampling by Auger Borings[1]

This standard is issued under the fixed designation D 1452; the number immediately following the designation indicates the year of original adoption or, in the case of revision, the year of last revision. A number in parentheses indicates the year of last reapproval. A superscript epsilon (ε) indicates an editorial change since the last revision or reapproval.

This standard has been approved for use by agencies of the Department of Defense. Consult the DoD Index of Specifications and Standards for the specific year of issue which has been adopted by the Department of Defense.

[ε1] NOTE—Section 6 was added editorially in July 1990.

. Scope

1.1 This practice covers equipment and procedures for the se of earth augers in shallow geotechnical exploration. This ractice does not apply to sectional continuous flight augers.

1.2 *This standard does not purport to address the safety roblems associated with its use. It is the responsibility of the ser of this standard to establish appropriate safety and ealth practices and determine the applicability of regulatory mitations prior to use.*

. Significance and Use

2.1 Auger borings often provide the simplest method of oil investigation and sampling. They may be used for any urpose where disturbed samples can be used and are aluable in connection with ground water level determina-on and indication of changes in strata and advancement of ole for spoon and tube sampling. Equipment required is mple and readily available. Depths of auger investigations re, however, limited by ground water conditions, soil haracteristics, and the equipment used.

. Apparatus

3.1 *Hand-Operated Augers:*

3.1.1 *Helical Augers*—Small lightweight augers generally vailable in sizes from 1 through 3 in. (25.4 through 76.2 nm).

3.1.1.1 *Spiral-Type Auger*, consisting of a flat thin metal trip, machine twisted to a spiral configuration of uniform itch; having at one end, a sharpened or hardened point, vith a means of attaching a shaft or extension at the opposite nd.

3.1.1.2 *Ship-Type Auger*—Similar to a carpenter's wood it. It is generally forged from steel and machined to the lesired size and configuration. It is normally provided with harpened and hardened nibs at the point end and with an ntegral shaft extending through its length for attachment of handle or extension at the opposite end.

3.1.2 *Open Tubular Augers*, ranging in size from 1.5 hrough 8 in. (38.1 through 203.2 mm) and having the common characteristic of appearing essentially tubular when viewed from the digging end.

3.1.2.1 *Orchard-Barrel Type*, consisting essentially of a tube having cutting lips or nibs hardened and sharpened to penetrate the formation on one end and an adaptor fitting for an extension or handle on the opposite end.

3.1.2.2 *Open-Spiral Type*, consisting of a flat thin metal strip that has been helically wound around a circular mandrel to form a spiral in which the flat faces of the strip are parallel to the axis of the augered hole. The lower helix edges are hard-faced to improve wear characteristics. The opposite end is fitted with an adaptor for extension.

3.1.2.3 *Closed-Spiral Type*—Nearly identical to the open-spiral type except, the pitch of the helically wound spiral is much less than that of the open-spiral type.

3.1.3 *Post-Hole Augers*, generally 2 through 8 in. (50.8 through 203.2 mm), and having in common a means of blocking the escape of soil from the auger.

3.1.3.1 *Clam-Shell Type*, consisting of two halves, hinged to allow opening and closing for alternately digging and retrieving. It is not usable deeper than about 3.5 ft (1.07 m).

3.1.3.2 *Iwan Type*, consisting of two tubular steel segments, connected at the top to a common member to form a nearly complete tube, but with diametrically opposed openings. It is connected at the bottom by two radial blades pitched to serve as cutters which also block the escape of contained soil. Attachment of handle or extension is at the top connector.

3.2 *Machine-Operated Augers:*

3.2.1 *Helical Augers*, generally 8 through 48 in. (203.2 through 1219 mm), consisting essentially of a center shaft fitted with a shank or socket for application of power, and having one to three complete 360° (6.28-rad) spirals for conveyance and storage of cut soil. Cutter bits and pilot bits are available in moderate and hard formation types and normally replaceable in the field. They are normally operated by heavy-duty, high-torque machines, designed for heavy construction work.

3.2.2 *Stinger Augers*, generally 6 through 30 in. (152.4 through 762 mm), are similar to the helical auger in 3.2.1, but lighter and generally smaller. They are commonly operated by light-duty machines for post and power pole holes.

3.2.3 *Disk Augers*, generally 10 through 30 in. (254 through 762 mm), consisting essentially of a flat, steel disk with diametrically opposed segments removed and having a

[1] This practice is under the jurisdiction of ASTM Committee D-18 on Soil and Rock and is the direct responsibility of Subcommittee D18.02 on Sampling and Related Field Testing for Soil Investigations.

Current edition approved June 12, 1980. Published August 1980. Originally published as D 1452 – 57 T. Last previous edition D 1452 – 65 (1972).

0002655

shank or socket located centrally for application of power. Replaceable cutter bits, located downward from the leading edges of the remaining disk, dig and load soil that is held on the disk by valves or shutters hinged at the disk in order to close the removed segments. The disk auger is specifically designed to be operated by machines having limited vertical clearance between spindle and ground surface.

3.2.4 *Bucket Auger*, generally 12 through 48 in. (304.8 through 1219 mm), consisting essentially of a disk auger, without shank or socket, but hinge-mounted to the bottom of a steel tube or bucket of approximately the same diameter as the disk auger. A socket or shank for power application is located in the top center of the bucket diametral cross piece provided for the purpose.

3.3 *Casing* (when needed), consisting of pipe of slightly larger diameter than the auger used.

3.4 *Accessory Equipment*—Labels, field log sheets, sample jars, sealing wax, sample bags, and other necessary tools and supplies.

4. Procedure

4.1 Make the auger boring by rotating and advancing the desired distance into the soil. Withdraw the auger from the hole and remove the soil for examination and test. Return the empty auger to the hole and repeat the procedure. Continue the sequence until the required depth is reached.

4.2 Casing is required in unstable soil in which the bore hole fails to stay open and especially when the boring is extended below the ground-water level. The inside diameter of the casing must be slightly larger than the diameter of the auger used. The casing shall be driven to a depth not greater than the top of the next sample and shall be cleaned out by means of the auger. The auger can then be inserted into the bore hole and turned below the bottom of the casing to obtain a sample.

4.3 The soil auger can be used both for boring the hole and for bringing up disturbed samples of the soil encountered. The structure of a cohesive soil is completely destroyed and the moisture may be changed by the auger. Seal all samples in a jar or other airtight container and label appropriately. If more than one type of soil is picked up in the sample, prepare a separate container for each type of soil.

4.4 *Field Observations*—Record complete ground water information in the field logs. Where casing is used, measure ground water levels, both before and after the casing is pulled. In sands, determine the water level at least 30 min after the boring is completed; in silts, at least 24 h. In clays, no accurate water level determination is possible unless pervious seams are present. As a precaution, however, water levels in clays shall be taken after at least 24 h.

5. Report

5.1 The data obtained in boring shall be recorded in the field logs and shall include the following:

5.1.1 Date of start and completion of boring,

5.1.2 Identifying number of boring,

5.1.3 Reference datum including direction and distance of boring relative to reference line of project or other suitable reference points,

5.1.4 Type and size of auger used in boring,

5.1.5 Depth of changes in strata,

5.1.6 Description of soil in each major stratum,

5.1.7 Ground water elevation and location of seepage zones, when found, and

5.1.8 Condition of augered hole upon removal of auger, that is, whether the hole remains open or the sides cave, when such can be observed.

6. Keywords

Auger borings; sampling; soil investigations

The American Society for Testing and Materials takes no position respecting the validity of any patent rights asserted in connection with any item mentioned in this standard. Users of this standard are expressly advised that determination of the validity of any such patent rights, and the risk of infringement of such rights, are entirely their own responsibility.

This standard is subject to revision at any time by the responsible technical committee and must be reviewed every five years and if not revised, either reapproved or withdrawn. Your comments are invited either for revision of this standard or for additional standards and should be addressed to ASTM Headquarters. Your comments will receive careful consideration at a meeting of the responsible technical committee, which you may attend. If you feel that your comments have not received a fair hearing you should make your views known to the ASTM Committee on Standards, 1916 Race St., Philadelphia, PA 19103.

Designation: D 1586 – 84 (Reapproved 1992)$^{\epsilon 1}$

Standard Test Method for Penetration Test and Split-Barrel Sampling of Soils[1]

This standard is issued under the fixed designation D 1586; the number immediately following the designation indicates the year of original adoption or, in the case of revision, the year of last revision. A number in parentheses indicates the year of last reapproval. A superscript epsilon (ε) indicates an editorial change since the last revision or reapproval.

This standard has been approved for use by agencies of the Department of Defense. Consult the DOD Index of Specifications and Standards for the specific year of issue which has been adopted by the Department of Defense.

$^{\epsilon 1}$NOTE—Editorial changes were made throughout October 1992.

1. Scope

1.1 This test method describes the procedure, generally known as the Standard Penetration Test (SPT), for driving a split-barrel sampler to obtain a representative soil sample and a measure of the resistance of the soil to penetration of the sampler.

1.2 *This standard does not purport to address all of the safety problems, if any, associated with its use. It is the responsibility of the user of this standard to establish appropriate safety and health practices and determine the applicability of regulatory limitations prior to use.* For a specific precautionary statement, see 5.4.1.

1.3 The values stated in inch-pound units are to be regarded as the standard.

2. Referenced Documents

2.1 *ASTM Standards:*

D 2487 Test Method for Classification of Soils for Engineering Purposes[2]

D 2488 Practice for Description and Identification of Soils (Visual-Manual Procedure)[2]

D 4220 Practices for Preserving and Transporting Soil Samples[2]

D 4633 Test Method for Stress Wave Energy Measurement for Dynamic Penetrometer Testing Systems[2]

3. Terminology

3.1 *Descriptions of Terms Specific to This Standard*

3.1.1 *anvil*—that portion of the drive-weight assembly which the hammer strikes and through which the hammer energy passes into the drill rods.

3.1.2 *cathead*—the rotating drum or windlass in the rope-cathead lift system around which the operator wraps a rope to lift and drop the hammer by successively tightening and loosening the rope turns around the drum.

3.1.3 *drill rods*—rods used to transmit downward force and torque to the drill bit while drilling a borehole.

3.1.4 *drive-weight assembly*—a device consisting of the hammer, hammer fall guide, the anvil, and any hammer drop system.

3.1.5 *hammer*—that portion of the drive-weight assembly consisting of the 140 ± 2 lb (63.5 ± 1 kg) impact weight which is successively lifted and dropped to provide the energy that accomplishes the sampling and penetration.

3.1.6 *hammer drop system*—that portion of the drive-weight assembly by which the operator accomplishes the lifting and dropping of the hammer to produce the blow.

3.1.7 *hammer fall guide*—that part of the drive-weight assembly used to guide the fall of the hammer.

3.1.8 *N-value*—the blowcount representation of the penetration resistance of the soil. The *N*-value, reported in blows per foot, equals the sum of the number of blows required to drive the sampler over the depth interval of 6 to 18 in. (150 to 450 mm) (see 7.3).

3.1.9 ΔN—the number of blows obtained from each of the 6-in. (150-mm) intervals of sampler penetration (see 7.3).

3.1.10 *number of rope turns*—the total contact angle between the rope and the cathead at the beginning of the operator's rope slackening to drop the hammer, divided by 360° (see Fig. 1).

3.1.11 *sampling rods*—rods that connect the drive-weight assembly to the sampler. Drill rods are often used for this purpose.

3.1.12 *SPT*—abbreviation for Standard Penetration Test, a term by which engineers commonly refer to this method.

4. Significance and Use

4.1 This test method provides a soil sample for identification purposes and for laboratory tests appropriate for soil obtained from a sampler that may produce large shear strain disturbance in the sample.

4.2 This test method is used extensively in a great variety of geotechnical exploration projects. Many local correlations and widely published correlations which relate SPT blowcount, or *N*-value, and the engineering behavior of earthworks and foundations are available.

5. Apparatus

5.1 *Drilling Equipment*—Any drilling equipment that provides at the time of sampling a suitably clean open hole before insertion of the sampler and ensures that the penetration test is performed on undisturbed soil shall be acceptable. The following pieces of equipment have proven to be

[1] This method is under the jurisdiction of ASTM Committee D-18 on Soil and Rock and is the direct responsibility of Subcommittee D18.02 on Sampling and Related Field Testing for Soil Investigations.

Current edition approved Sept. 11, 1984. Published November 1984. Originally published as D 1586 – 58 T. Last previous edition D 1586 – 67 (1974).

[2] *Annual Book of ASTM Standards*, Vol 04.08.

000267

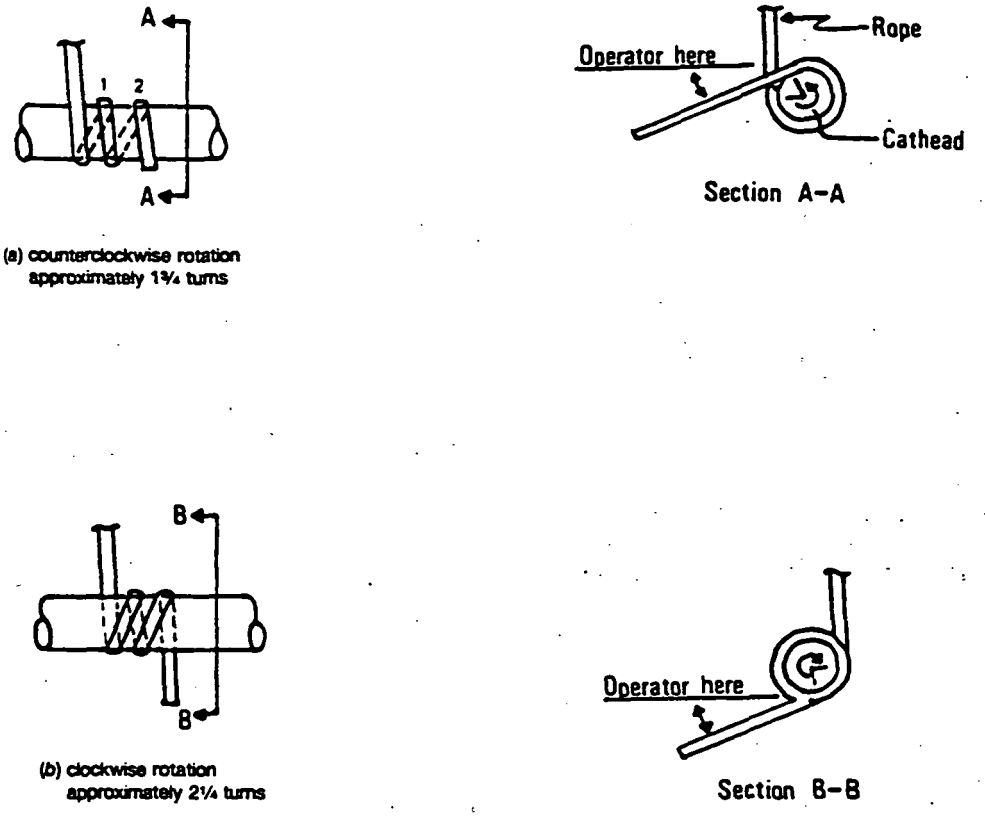

FIG. 1 Definitions of the Number of Rope Turns and the Angle for (a) Counterclockwise Rotation and (b) Clockwise Rotation of the Cathead

itable for advancing a borehole in some subsurface condi-
ıs.

.1.1 *Drag, Chopping, and Fishtail Bits*, less than 6.5 in. (162 mm) and greater than 2.2 in. (56 mm) in diameter may be used in conjuction with open-hole rotary drilling or casing-advancement drilling methods. To avoid disturbance of the underlying soil, bottom discharge bits are not permitted; only side discharge bits are permitted.

5.1.2 *Roller-Cone Bits*, less than 6.5 in. (162 mm) and greater than 2.2 in. (56 mm) in diameter may be used in conjunction with open-hole rotary drilling or casing-advancement drilling methods if the drilling fluid discharge is deflected.

5.1.3 *Hollow-Stem Continuous Flight Augers*, with or without a center bit assembly, may be used to drill the boring. The inside diameter of the hollow-stem augers shall be less than 6.5 in. (162 mm) and greater than 2.2 in. (56 mm).

5.1.4 *Solid, Continuous Flight, Bucket and Hand Augers*, less than 6.5 in. (162 mm) and greater than 2.2 in. (56 mm) in diameter may be used if the soil on the side of the boring does not cave onto the sampler or sampling rods during sampling.

5.2 *Sampling Rods*—Flush-joint steel drill rods shall be used to connect the split-barrel sampler to the drive-weight assembly. The sampling rod shall have a stiffness (moment of inertia) equal to or greater than that of parallel wall "A" a steel rod which has an outside diameter of 1⅝ in. 2 mm) and an inside diameter of 1⅛ in. (28.5 mm).

NOTE 1—Recent research and comparative testing indicates the type rod used, with stiffness ranging from "A" size rod to "N" size rod, will usually have a negligible effect on the *N*-values to depths of at least 100 ft (30 m).

5.3 *Split-Barrel Sampler*—The sampler shall be constructed with the dimensions indicated in Fig. 2. The driving shoe shall be of hardened steel and shall be replaced or repaired when it becomes dented or distorted. The use of liners to produce a constant inside diameter of 1⅜ in. (35 mm) is permitted, but shall be noted on the penetration record if used. The use of a sample retainer basket is permitted, and should also be noted on the penetration record if used.

NOTE 2—Both theory and available test data suggest that *N*-values may increase between 10 to 30 % when liners are used.

5.4 *Drive-Weight Assembly:*

5.4.1 *Hammer and Anvil*—The hammer shall weigh 140 ± 2 lb (63.5 ± 1 kg) and shall be a solid rigid metallic mass. The hammer shall strike the anvil and make steel on steel contact when it is dropped. A hammer fall guide permitting a free fall shall be used. Hammers used with the cathead and rope method shall have an unimpeded overlift capacity of at least 4 in. (100 mm). For safety reasons, the use of a hammer assembly with an internal anvil is encouraged.

NOTE 3—It is suggested that the hammer fall guide be permanently marked to enable the operator or inspector to judge the hammer drop height.

5.4.2 *Hammer Drop System*—Rope-cathead, trip, semi-automatic, or automatic hammer drop systems may be used, providing the lifting apparatus will not cause penetration of

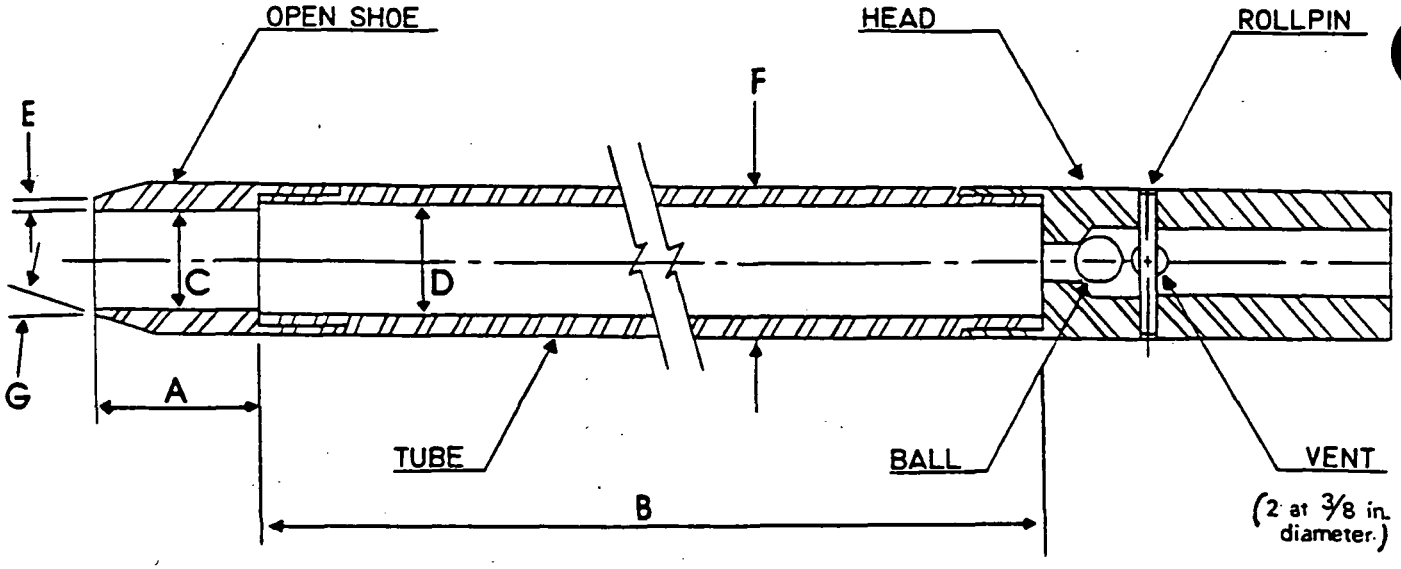

A = 1.0 to 2.0 in. (25 to 50 mm)
B = 18.0 to 30.0 in. (0.457 to 0.762 m)
C = 1.375 ± 0.005 in. (34.93 ± 0.13 mm)
D = 1.50 ± 0.05 − 0.00 in. (38.1 ± 1.3 − 0.0 mm)
E = 0.10 ± 0.02 in. (2.54 ± 0.25 mm)
F = 2.00 ± 0.05 − 0.00 in. (50.8 ± 1.3 − 0.0 mm)
G = 16.0° to 23.0°

The 1½ in. (38 mm) inside diameter split barrel may be used with a 16-gage wall thickness split liner. The penetrating end of the drive shoe may be slightly rounded. Metal or plastic retainers may be used to retain soil samples.

FIG. 2 Split-Barrel Sampler

the sampler while re-engaging and lifting the hammer.

5.5 *Accessory Equipment*—Accessories such as labels, sample containers, data sheets, and groundwater level measuring devices shall be provided in accordance with the requirements of the project and other ASTM standards.

6. Drilling Procedure

6.1 The boring shall be advanced incrementally to permit intermittent or continuous sampling. Test intervals and locations are normally stipulated by the project engineer or geologist. Typically, the intervals selected are 5 ft (1.5 mm) or less in homogeneous strata with test and sampling locations at every change of strata.

6.2 Any drilling procedure that provides a suitably clean and stable hole before insertion of the sampler and assures that the penetration test is performed on essentially undisturbed soil shall be acceptable. Each of the following procedures have proven to be acceptable for some subsurface conditions. The subsurface conditions anticipated should be considered when selecting the drilling method to be used.

6.2.1 Open-hole rotary drilling method.

6.2.2 Continuous flight hollow-stem auger method.

6.2.3 Wash boring method.

6.2.4 Continuous flight solid auger method.

6.3 Several drilling methods produce unacceptable borings. The process of jetting through an open tube sampler and then sampling when the desired depth is reached shall not be permitted. The continuous flight solid auger method shall not be used for advancing the boring below a water table or below the upper confining bed of a confined non-cohesive stratum that is under artesian pressure. Casing may not be advanced below the sampling elevation prior to sampling. Advancing a boring with bottom discharge bits is not permissible. It is not permissible to advance the boring for subsequent insertion of the sampler solely by means of previous sampling with the SPT sampler.

6.4 The drilling fluid level within the boring or hollow-stem augers shall be maintained at or above the in situ groundwater level at all times during drilling, removal of drill rods, and sampling.

7. Sampling and Testing Procedure

7.1 After the boring has been advanced to the desired sampling elevation and excessive cuttings have been removed, prepare for the test with the following sequence of operations.

7.1.1 Attach the split-barrel sampler to the sampling rods and lower into the borehole. Do not allow the sampler to drop onto the soil to be sampled.

7.1.2 Position the hammer above and attach the anvil to the top of the sampling rods. This may be done before the sampling rods and sampler are lowered into the borehole.

7.1.3 Rest the dead weight of the sampler, rods, anvil, and drive weight on the bottom of the boring and apply a seating blow. If excessive cuttings are encountered at the bottom of the boring, remove the sampler and sampling rods from the boring and remove the cuttings.

7.1.4 Mark the drill rods in three successive 6-in. (0.15-m) increments so that the advance of the sampler under the impact of the hammer can be easily observed for each 6-in. (0.15-m) increment.

7.2 Drive the sampler with blows from the 140-lb (63.5-

kg) hammer and count the number of blows applied in each 6-in. (0.15-m) increment until one of the following occurs:

7.2.1 A total of 50 blows have been applied during any one of the three 6-in. (0.15-m) increments described in 7.1.4.

7.2.2 A total of 100 blows have been applied.

7.2.3 There is no observed advance of the sampler during the application of 10 successive blows of the hammer.

7.2.4 The sampler is advanced the complete 18 in. (0.45 m) without the limiting blow counts occurring as described in 7.2.1, 7.2.2, or 7.2.3.

7.3 Record the number of blows required to effect each 6 in. (0.15 m) of penetration or fraction thereof. The first 6 in. is considered to be a seating drive. The sum of the number of blows required for the second and third 6 in. of penetration is termed the "standard penetration resistance," or the "*N*-value." If the sampler is driven less than 18 in. (0.45 m), as permitted in 7.2.1, 7.2.2, or 7.2.3, the number of blows per each complete 6-in. (0.15-m) increment and per each partial increment shall be recorded on the boring log. For partial increments, the depth of penetration shall be reported to the nearest 1 in. (25 mm), in addition to the number of blows. If the sampler advances below the bottom of the boring under the static weight of the drill rods or the weight of the drill rods plus the static weight of the hammer, this information should be noted on the boring log.

7.4 The raising and dropping of the 140-lb (63.5-kg) hammer shall be accomplished using either of the following two methods:

7.4.1 By using a trip, automatic, or semi-automatic hammer drop system which lifts the 140-lb (63.5-kg) hammer and allows it to drop 30 ± 1.0 in. (0.76 m ± 25 mm) unimpeded.

7.4.2 By using a cathead to pull a rope attached to the hammer. When the cathead and rope method is used the system and operation shall conform to the following:

7.4.2.1 The cathead shall be essentially free of rust, oil, or grease and have a diameter in the range of 6 to 10 in. (150 to 250 mm).

7.4.2.2 The cathead should be operated at a minimum speed of rotation of 100 RPM, or the approximate speed of rotation shall be reported on the boring log.

7.4.2.3 No more than 2¼ rope turns on the cathead may be used during the performance of the penetration test, as shown in Fig. 1.

NOTE 4—The operator should generally use either 1¾ or 2¼ rope turns, depending upon whether or not the rope comes off the top (1¾ turns) or the bottom (2¼ turns) of the cathead. It is generally known and accepted that 2¾ or more rope turns considerably impedes the fall of the hammer and should not be used to perform the test. The cathead rope should be maintained in a relatively dry, clean, and unfrayed condition.

7.4.2.4 For each hammer blow, a 30-in. (0.76-m) lift and drop shall be employed by the operator. The operation of pulling and throwing the rope shall be performed rhythmically without holding the rope at the top of the stroke.

7.5 Bring the sampler to the surface and open. Record the percent recovery or the length of sample recovered. Describe the soil samples recovered as to composition, color, stratification, and condition, then place one or more representative portions of the sample into sealable moisture-proof containers (jars) without ramming or distorting any apparent stratification. Seal each container to prevent evaporation of soil moisture. Affix labels to the containers bearing job designation, boring number, sample depth, and the blow count per 6-in. (0.15-m) increment. Protect the samples against extreme temperature changes. If there is a soil change within the sampler, make a jar for each stratum and note its location in the sampler barrel.

8. Report

8.1 Drilling information shall be recorded in the field and shall include the following:

8.1.1 Name and location of job,

8.1.2 Names of crew,

8.1.3 Type and make of drilling machine,

8.1.4 Weather conditions,

8.1.5 Date and time of start and finish of boring,

8.1.6 Boring number and location (station and coordinates, if available and applicable),

8.1.7 Surface elevation, if available,

8.1.8 Method of advancing and cleaning the boring,

8.1.9 Method of keeping boring open,

8.1.10 Depth of water surface and drilling depth at the time of a noted loss of drilling fluid, and time and date when reading or notation was made,

8.1.11 Location of strata changes,

8.1.12 Size of casing, depth of cased portion of boring,

8.1.13 Equipment and method of driving sampler,

8.1.14 Type sampler and length and inside diameter of barrel (note use of liners),

8.1.15 Size, type, and section length of the sampling rods, and

8.1.16 Remarks.

8.2 Data obtained for each sample shall be recorded in the field and shall include the following:

8.2.1 Sample depth and, if utilized, the sample number,

8.2.2 Description of soil,

8.2.3 Strata changes within sample,

8.2.4 Sampler penetration and recovery lengths, and

8.2.5 Number of blows per 6-in. (0.15-m) or partial increment.

9. Precision and Bias

9.1 *Precision*—A valid estimate of test precision has not been determined because it is too costly to conduct the necessary inter-laboratory (field) tests. Subcommittee D18.02 welcomes proposals to allow development of a valid precision statement.

9.2 *Bias*—Because there is no reference material for this test method, there can be no bias statement.

9.3 Variations in *N*-values of 100 % or more have been observed when using different standard penetration test apparatus and drillers for adjacent borings in the same soil formation. Current opinion, based on field experience, indicates that when using the same apparatus and driller, *N*-values in the same soil can be reproduced with a coefficient of variation of about 10 %.

9.4 The use of faulty equipment, such as an extremely massive or damaged anvil, a rusty cathead, a low speed cathead, an old, oily rope, or massive or poorly lubricated rope sheaves can significantly contribute to differences in *N*-values obtained between operator-drill rig systems.

9.5 The variability in N-values produced by different drill rigs and operators may be reduced by measuring that part of the hammer energy delivered into the drill rods from the sampler and adjusting N on the basis of comparative energies. A method for energy measurement and N-value adjustment is given in Test Method D 4633.

10. Keywords

10.1 blow count; in-situ test; penetration resistance; split-barrel sampling; standard penetration test

The American Society for Testing and Materials takes no position respecting the validity of any patent rights asserted in connection with any item mentioned in this standard. Users of this standard are expressly advised that determination of the validity of any such patent rights, and the risk of infringement of such rights, are entirely their own responsibility.

This standard is subject to revision at any time by the responsible technical committee and must be reviewed every five years and if not revised, either reapproved or withdrawn. Your comments are invited either for revision of this standard or for additional standards and should be addressed to ASTM Headquarters. Your comments will receive careful consideration at a meeting of the responsible technical committee, which you may attend. If you feel that your comments have not received a fair hearing you should make your views known to the ASTM Committee on Standards, 1916 Race St., Philadelphia, PA 19103.

Standard Practice for Thin-Walled Tube Sampling of Soils[1]

This standard is issued under the fixed designation D 1587; the number immediately following the designation indicates the year of original adoption or, in the case of revision, the year of last revision. A number in parentheses indicates the year of last reapproval. A superscript epsilon (ε) indicates an editorial change since the last revision or reapproval.

This practice has been approved for use by agencies of the Department of Defense and for listing in the DOD Index of Specifications and Standards.

1. Scope

1.1 This practice covers a procedure for using a thin-walled metal tube to recover relatively undisturbed soil samples suitable for laboratory tests of structural properties. Thin-walled tubes used in piston, plug, or rotary-type samplers, such as the Denison or Pitcher, must comply with the portions of this practice which describe the thin-walled tubes (5.3).

NOTE 1—This practice does not apply to liners used within the above samplers.

2. Referenced Documents

2.1 *ASTM Standards:*

D 2488 Practice for Description and Identification of Soils (Visual-Manual Procedure)[2]

D 3550 Practice for Ring-Lined Barrel Sampling of Soils[2]

D 4220 Practices for Preserving and Transporting Soil Samples[2]

3. Summary of Practice

3.1 A relatively undisturbed sample is obtained by pressing a thin-walled metal tube into the in-situ soil, removing the soil-filled tube, and sealing the ends to prevent the soil from being disturbed or losing moisture.

4. Significance and Use

4.1 This practice, or Practice D 3550, is used when it is necessary to obtain a relatively undisturbed specimen suitable for laboratory tests of structural properties or other tests that might be influenced by soil disturbance.

5. Apparatus

5.1 *Drilling Equipment*—Any drilling equipment may be used that provides a reasonably clean hole; that does not disturb the soil to be sampled; and that does not hinder the penetration of the thin-walled sampler. Open borehole diameter and the inside diameter of driven casing or hollow stem auger shall not exceed 3.5 times the outside diameter of the thin-walled tube.

5.2 *Sampler Insertion Equipment*, shall be adequate to provide a relatively rapid continuous penetration force. For hard formations it may be necessary, although not recommended, to drive the thin-walled tube sampler.

5.3 *Thin-Walled Tubes*, should be manufactured as shown in Fig. 1. They should have an outside diameter of 2 to 5 in. and be made of metal having adequate strength for use in the soil and formation intended. Tubes shall be clean and free of all surface irregularities including projecting weld seams.

5.3.1 *Length of Tubes*—See Table 1 and 6.4.

5.3.2 *Tolerances*, shall be within the limits shown in Table 2.

5.3.3 *Inside Clearance Ratio*, should be 1 % or as specified by the engineer or geologist for the soil and formation to be sampled. Generally, the inside clearance ratio used should increase with the increase in plasticity of the soil being sampled. See Fig. 1 for definition of inside clearance ratio.

5.3.4 *Corrosion Protection*—Corrosion, whether from galvanic or chemical reaction, can damage or destroy both the thin-walled tube and the sample. Severity of damage is a function of time as well as interaction between the sample and the tube. Thin-walled tubes should have some form of protective coating. Tubes which will contain samples for more than 72 h shall be coated. The type of coating to be used may vary depending upon the material to be sampled. Coatings may include a light coat of lubricating oil, lacquer, epoxy, Teflon, and others. Type of coating must be specified by the engineer or geologist if storage will exceed 72 h. Plating of the tubes or alternate base metals may be specified by the engineer or geologist.

5.4 *Sampler Head*, serves to couple the thin-walled tube to the insertion equipment and, together with the thin-walled tube, comprises the thin-walled tube sampler. The sampler head shall contain a suitable check valve and a venting area to the outside equal to or greater than the area through the check valve. Attachment of the head to the tube shall be concentric and coaxial to assure uniform application of force to the tube by the sampler insertion equipment.

6. Procedure

6.1 Clean out the borehole to sampling elevation using whatever method is preferred that will ensure the material to be sampled is not disturbed. If groundwater is encountered, maintain the liquid level in the borehole at or above ground water level during the sampling operation.

6.2 Bottom discharge bits are not permitted. Side discharge bits may be used, with caution. Jetting through an open-tube sampler to clean out the borehole to sampling elevation is not permitted. Remove loose material from the center of a casing or hollow stem auger as carefully as

[1] This practice is under the jurisdiction of ASTM Committee D-18 on Soil and Rock and is the direct responsibility of Subcommittee D18.02 on Sampling and Related Field Testing for Soil Investigations.

Current edition approved Aug. 17, 1983. Published October 1983. Originally published as D 1587 - 58 T. Last previous edition D 1587 - 74.

[2] *Annual Book of ASTM Standards*, Vol 04.08.

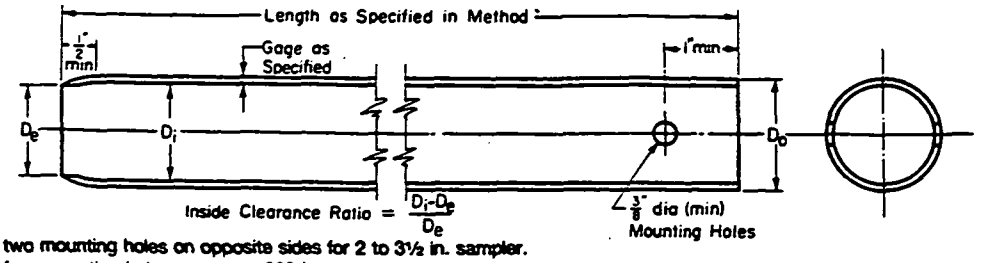

NOTE 1—Minimum of two mounting holes on opposite sides for 2 to 3½ in. sampler.
NOTE 2—Minimum of four mounting holes spaced at 90° for samplers 4 in. and larger.
NOTE 3—Tube held with hardened screws.
NOTE 4—Two-inch outside-diameter tubes are specified with an 18-gage wall thickness to comply with area ratio criteria accepted for "undisturbed samples." Users are advised that such tubing is difficult to locate and can be extremely expensive in small quantities. Sixteen-gage tubes are generally readily available.

Metric Equivalents

in.	mm
⅜	6.77
½	12.7
1	25.4
2	50.8
3½	88.9
4	101.6

FIG. 1 Thin-Walled Tube for Sampling

TABLE 1 Suitable Thin-Walled Steel Sample Tubes[A]

Outside diameter:			
in.	2	3	5
mm	50.8	76.2	127
Wall thickness:			
Bwg	18	16	11
in.	0.049	0.065	0.120
mm	1.24	1.65	3.05
Tube length:			
in.	36	36	54
m	0.91	0.91	1.45
Clearance ratio, %	1	1	1

[A] The three diameters recommended in Table 1 are indicated for purposes of standardization, and are not intended to indicate that sampling tubes of intermediate or larger diameters are not acceptable. Lengths of tubes shown are illustrative. Proper lengths to be determined as suited to field conditions.

TABLE 2 Dimensional Tolerances for Thin-Walled Tubes

Size Outside Diameter	Nominal Tube Diameters from Table 1[A] Tolerances, in.		
	2	3	5
Outside diameter	+0.007 −0.000	+0.010 −0.000	+0.015 −0.000
Inside diameter	+0.000 −0.007	+0.000 −0.010	+0.000 −0.015
Wall thickness	±0.007	±0.010	±0.015
Ovality	0.015	0.020	0.030
Straightness	0.030/ft	0.030/ft	0.030/ft

[A] Intermediate or larger diameters should be proportional. Tolerances shown are essentially standard commercial manufacturing tolerances for seamless steel mechanical tubing. Specify only two of the first three tolerances; that is, O.D. and I.D., or O.D. and Wall, or I.D. and Wall.

possible to avoid disturbance of the material to be sampled.

NOTE 2—Roller bits are available in downward-jetting and diffused-jet configurations. Downward-jetting configuration rock bits are not acceptable. Diffuse-jet configurations are generally acceptable.

6.3 Place the sample tube so that its bottom rests on the bottom of the hole. Advance the sampler without rotation by a continuous relatively rapid motion.

6.4 Determine the length of advance by the resistance and condition of the formation, but the length shall never exceed 5 to 10 diameters of the tube in sands and 10 to 15 diameters of the tube in clays.

NOTE 3—Weight of sample, laboratory handling capabilities, transportation problems, and commercial availability of tubes will generally limit maximum practical lengths to those shown in Table 1.

6.5 When the formation is too hard for push-type insertion, the tube may be driven or Practice D 3550 may be used. Other methods, as directed by the engineer or geologist, may be used. If driving methods are used, the data regarding weight and fall of the hammer and penetration achieved must be shown in the report. Additionally, that tube must be prominently labeled a "driven sample."

6.6 In no case shall a length of advance be greater than the sample-tube length minus an allowance for the sampler head and a minimum of 3 in. for sludge-end cuttings.

NOTE 4—The tube may be rotated to shear bottom of the sample after pressing is complete.

6.7 Withdraw the sampler from the formation as carefully as possible in order to minimize disturbance of the sample.

7. Preparation for Shipment

7.1 Upon removal of the tube, measure the length of sample in the tube. Remove the disturbed material in the upper end of the tube and measure the length again. Seal the upper end of the tube. Remove at least 1 in. of material from the lower end of the tube. Use this material for soil description in accordance with Practice D 2488. Measure the overall sample length. Seal the lower end of the tube. Alternatively, after measurement, the tube may be sealed without removal of soil from the ends of the tube if so directed by the engineer or geologist.

NOTE 5—Field extrusion and packaging of extruded samples under the specific direction of a geotechnical engineer or geologist is permitted.
NOTE 6—Tubes sealed over the ends as opposed to those sealed with expanding packers should contain end padding in end voids in order to prevent drainage or movement of the sample within the tube.

7.2 Prepare and immediately affix labels or apply markings as necessary to identify the sample. Assure that the

markings or labels are adequate to survive transportation and storage.

8. Report

8.1 The appropriate information is required as follows:

8.1.1 Name and location of the project,

8.1.2 Boring number and precise location on project,

8.1.3 Surface elevation or reference to a datum,

8.1.4 Date and time of boring—start and finish,

8.1.5 Depth to top of sample and number of sample,

8.1.6 Description of sampler: size, type of metal, type of coating,

8.1.7 Method of sampler insertion: push or drive,

8.1.8 Method of drilling, size of hole, casing, and drilling fluid used,

8.1.9 Depth to groundwater level: date and time measured,

8.1.10 Any possible current or tidal effect on water level,

8.1.11 Soil description in accordance with Practice D 2488,

8.1.12 Length of sampler advance, and

8.1.13 Recovery: length of sample obtained.

9. Precision and Bias

9.1 This practice does not produce numerical data; therefore, a precision and bias statement is not applicable.

The American Society for Testing and Materials takes no position respecting the validity of any patent rights asserted in connection with any item mentioned in this standard. Users of this standard are expressly advised that determination of the validity of any such patent rights, and the risk of infringement of such rights, are entirely their own responsibility.

This standard is subject to revision at any time by the responsible technical committee and must be reviewed every five years and if not revised, either reapproved or withdrawn. Your comments are invited either for revision of this standard or for additional standards and should be addressed to ASTM Headquarters. Your comments will receive careful consideration at a meeting of the responsible technical committee, which you may attend. If you feel that your comments have not received a fair hearing you should make your views known to the ASTM Committee on Standards, 1916 Race St., Philadelphia, PA 19103. known to the ASTM Committee on Standards, 1916 Race St., Philadelphia, PA 19103.

Standard Test Method for Unconfined Compressive Strength of Cohesive Soil[1]

This standard is issued under the fixed designation D 2166; the number immediately following the designation indicates the year of original adoption or, in the case of revision, the year of last revision. A number in parentheses indicates the year of last reapproval. A superscript epsilon (ε) indicates an editorial change since the last revision or reapproval.

1. Scope

1.1 This test method covers the determination of the unconfined compressive strength of cohesive soil in the undisturbed, remolded, or compacted condition, using strain-controlled application of the axial load.

1.2 This test method provides an approximate value of the strength of cohesive soils in terms of total stresses.

1.3 This test method is applicable only to cohesive materials which will not expel bleed water (water expelled from the soil due to deformation or compaction) during the loading portion of the test and which will retain intrinsic strength after removal of confining pressures, such as clays or cemented soils. Dry and crumbly soils, fissured or varved materials, silts, peats, and sands cannot be tested with this method to obtain valid unconfined compression strength values.

NOTE 1—The determination of the unconsolidated, undrained strength of cohesive soils with lateral confinement is covered by Test Method D 2850.

1.4 This test method is not a substitute for Test Method D 2850.

1.5 The values stated in SI units are to be regarded as the standard. The values stated in inch-pound units are approximate.

1.6 *This standard does not purport to address all of the safety problems, if any, associated with its use. It is the responsibility of the user of this standard to establish appropriate safety and health practices and determine the applicability of regulatory limitations prior to use.*

2. Referenced Documents

2.1 *ASTM Standards:*

D 422 Method for Particle-Size Analysis of Soils[2]

D 653 Terminology Relating to Soil, Rock, and Contained Fluids[2]

D 854 Test Method for Specific Gravity of Soils[2]

D 1587 Practice for Thin-Walled Tube Sampling of Soils[2]

D 2216 Test Method for Laboratory Determination of Water (Moisture) Content of Soil, Rock, and Soil-Aggregate Mixtures[2]

D 2487 Test Method for Classification of Soils for Engineering Purposes[2]

D 2488 Practice for Description and Identification of Soils (Visual-Manual Procedure)[2]

D 2850 Test Method for Unconsolidated, Undrained Compressive Strength of Cohesive Soils in Triaxial Compression[2]

D 4220 Practices for Preserving and Transporting Soil Samples[2]

D 4318 Test Method for Liquid Limit, Plastic Limit, and Plasticity Index of Soils[2]

3. Terminology

3.1 Definitions—Refer to Terminology D 653 for standard definitions of terms.

3.2 *Descriptions of Terms Specific to this Standard:*

3.2.1 *unconfined compressive strength (q_u)*—the compressive stress at which an unconfined cylindrical specimen of soil will fail in a simple compression test. In this test method, unconfined compressive strength is taken as the maximum load attained per unit area or the load per unit area at 15 % axial strain, whichever is secured first during the performance of a test.

3.2.2 *shear strength (s_u)*—for unconfined compressive strength test specimens, the shear strength is calculated to be ½ of the compressive stress at failure, as defined in 3.2.1.

4. Significance and Use

4.1 The primary purpose of the unconfined compression test is to quickly obtain the approximate compressive strength of soils that possess sufficient cohesion to permit testing in the unconfined state.

4.2 Samples of soils having slickensided or fissured structure, samples of some types of loess, very soft clays, dry and crumbly soils and varved materials, or samples containing significant portions of silt or sand, or both (all of which usually exhibit cohesive properties), frequently display higher shear strengths when tested in accordance with Test Method D 2850. Also, unsaturated soils will usually exhibit different shear strengths when tested in accordance with Test Method D 2850.

4.3 If both an undisturbed and a remolded test are performed on the same sample, the sensitivity of the material can be determined. This method of determining sensitivity is suitable only for soils that can retain a stable specimen shape in the remolded state.

NOTE 2—For soils that will not retain a stable shape, a vane shear test or Test Method D 2850 can be used to determine sensitivity.

[1] This test method is under the jurisdiction of ASTM Committee D-18 on Soil and Rock and is the direct responsibility of Subcommittee D18.05 on Structural Properties of Soils.

Current edition approved August 15, 1991. Published October 1991. Originally published as D 2166 – 63T. Last previous edition D 2166 – 85[ε1]

[2] *Annual Book of ASTM Standards*, Vol 04.08.

000275

Apparatus

.1 *Compression Device*—The compression device may a platform weighing scale equipped with a screw-jack-uvated load yoke, a hydraulic loading device, or any other compression device with sufficient capacity and control to provide the rate of loading prescribed in 7.1. For soil with an unconfined compressive strength of less than 100 kPa (1.0 ton/ft^2) the compression device shall be capable of measuring the compressive stress to within 1 kPa (0.01 ton/ft^2). For soil with an unconfined compressive strength of 100 kPa (1.0 ton/ft^2) or greater, the compression device shall be capable of measuring the compressive stress to the nearest 5 kPa (0.05 ton/ft^2).

5.2 *Sample Extruder*, capable of extruding the soil core from the sampling tube in the same direction of travel in which the sample entered the tube, at a uniform rate, and with negligible disturbance of the sample. Conditions at the time of sample removal may dictate the direction of removal, but the principal concern is to keep the degree of disturbance negligible.

5.3 *Deformation Indicator*—The deformation indicator shall be a dial indicator graduated to 0.03 mm (0.001 in.) or better and having a travel range of at least 20 % of the length of the test specimen, or some other measuring device, such as an electronic deformation measuring device, meeting these requirements.

5.4 *Dial Comparator*, or other suitable device, for measuring the physical dimensions of the specimen to within 1 % of the measured dimension.

NOTE 3—Vernier calipers are not recommended for soft specimens, ich will deform as the calipers are set on the specimen.

5.5 *Timer*—A timing device indicating the elapsed testing time to the nearest second shall be used for establishing the rate of strain application prescribed in 7.1.

5.6 *Balance*—The balance used to weigh specimens shall determine the mass of the specimen to within 0.1 % of its total mass.

5.7 *Equipment*, as specified in Test Method D 2216.

5.8 *Miscellaneous Apparatus*, including specimen trimming and carving tools, remolding apparatus, water content cans, and data sheets, as required.

6. Preparation of Test Specimens

6.1 *Specimen Size*—Specimens shall have a minimum diameter of 30 mm (1.3 in.) and the largest particle contained within the test specimen shall be smaller than one tenth of the specimen diameter. For specimens having a diameter of 72 mm (2.8 in.) or larger, the largest particle size shall be smaller than one sixth of the specimen diameter. If, after completion of a test on an undisturbed specimen, it is found, based on visual observation, that larger particles than permitted are present, indicate this information in the remarks section of the report of test data (Note 4). The height-to-diameter ratio shall be between 2 and 2.5. Determine the average height and diameter of the test specimen ing the apparatus specified in 5.4. Take a minimum of ree height measurements (120° apart), and at least three ameter measurements at the quarter points of the height.

NOTE 4—If large soil particles are found in the sample after testing, a particle-size analysis performed in accordance with Method D 422 may be performed to confirm the visual observation and the results provided with the test report.

6.2 *Undisturbed Specimens*—Prepare undisturbed specimens from large undisturbed samples or from samples secured in accordance with Practice D 1587 and preserved and transported in accordance with the practices for Group C samples in Practices D 4220. Tube specimens may be tested without trimming except for the squaring of ends, if conditions of the sample justify this procedure. Handle specimens carefully to prevent disturbance, changes in cross section, or loss of water content. If compression or any type of noticeable disturbance would be caused by the extrusion device, split the sample tube lengthwise or cut it off in small sections to facilitate removal of the specimen without disturbance. Prepare carved specimens without disturbance, and whenever possible, in a humidity-controlled room. Make every effort to prevent any change in water content of the soil. Specimens shall be of uniform circular cross section with ends perpendicular to the longitudinal axis of the specimen. When carving or trimming, remove any small pebbles or shells encountered. Carefully fill voids on the surface of the specimen with remolded soil obtained from the trimmings. When pebbles or crumbling result in excessive irregularity at the ends, cap the specimen with a minimum thickness of plaster of paris, hydrostone, or similar material. When sample condition permits, a vertical lathe that will accommodate the total sample may be used as an aid in carving the specimen to the required diameter. Where prevention of the development of appreciable capillary forces is deemed important, seal the specimen with a rubber membrane, thin plastic coatings, or with a coating of grease or sprayed plastic immediately after preparation and during the entire testing cycle. Determine the mass and dimensions of the test specimen. If the specimen is to be capped, its mass and dimensions should be determined before capping. If the entire test specimen is not to be used for determination of water content, secure a representative sample of cuttings for this purpose, placing them immediately in a covered container. The water content determination shall be performed in accordance with Test Method D 2216.

6.3 *Remolded Specimens*—Specimens may be prepared either from a failed undisturbed specimen or from a disturbed sample, providing it is representative of the failed undisturbed specimen. In the case of failed undisturbed specimens, wrap the material in a thin rubber membrane and work the material thoroughly with the fingers to assure complete remolding. Avoid entrapping air in the specimen. Exercise care to obtain a uniform density, to remold to the same void ratio as the undisturbed specimen, and to preserve the natural water content of the soil. Form the disturbed material into a mold of circular cross section having dimensions meeting the requirements of 6.1. After removal from the mold, determine the mass and dimensions of the test specimens.

6.4 *Compacted Specimens*—Specimens shall be prepared to the predetermined water content and density prescribed by the individual assigning the test (Note 5). After a specimen is formed, trim the ends perpendicular to the longitudinal axis, remove from the mold, and determine the mass and dimensions of the test specimen.

NOTE 5—Experience indicates that it is difficult to compact, handle, and obtain valid results with specimens that have a degree of saturation that is greater than 90 %.

7. Procedure

7.1 Place the specimen in the loading device so that it is centered on the bottom platen. Adjust the loading device carefully so that the upper platen just makes contact with the specimen. Zero the deformation indicator. Apply the load so as to produce an axial strain at a rate of ½ to 2 %/min. Record load, deformation, and time values at sufficient intervals to define the shape of the stress-strain curve (usually 10 to 15 points are sufficient). The rate of strain should be chosen so that the time to failure does not exceed about 15 min (Note 6). Continue loading until the load values decrease with increasing strain, or until 15 % strain is reached. The rate of strain used for testing sealed specimens may be decreased if deemed desirable for better test results. Indicate the rate of strain in the report of the test data, as required in 9.1.7. Determine the water content of the test specimen using the entire specimen, unless representative cuttings are obtained for this purpose, as in the case of undisturbed specimens. Indicate on the test report whether the water content sample was obtained before or after the shear test, as required in 9.1.2.

NOTE 6—Softer materials that will exhibit larger deformation at failure should be tested at a higher rate of strain. Conversely, stiff or brittle materials that will exhibit small deformations at failure should be tested at a lower rate of strain.

7.2 Make a sketch, or take a photo, of the test specimen at failure showing the slope angle of the failure surface if the angle is measurable.

7.3 A copy of a sample data sheet is included in Appendix X1. Any data sheet can be used, provided the form contains all the required data.

8. Calculation

8.1 Calculate the axial strain, ϵ_1, to the nearest 0.1 %, for a given applied load, as follows:

$$\epsilon_1 = \Delta L / L_0$$

where:

ΔL = length change of specimen as read from deformation indicator, mm (in.), and

L_0 = initial length of test specimen, mm (in.).

8.2 Calculate the average cross-sectional area, A, for a given applied load, as follows:

$$A = A_0/(1 - \epsilon_1)$$

where:

A_0 = initial average cross-sectional area of the specimen, mm² (in.²), and

ϵ_1 = axial strain for the given load, %.

8.3 Calculate the compressive stress, σ_c, to three significant figures, or nearest 1 kPa (0.01 ton/ft²), for a given applied load, as follows:

$$\sigma_c = (P/A)$$

where:

P = given applied load, kPa (ton/ft²),

A = corresponding average cross-sectional area mm² (in.²).

8.4 *Graph*—If desired, a graph showing the relationship between compressive stress (ordinate) and axial strain (abscissa) may be plotted. Select the maximum value of compressive stress, or the compressive stress at 15 % axial strain, whichever is secured first, and report as the unconfined compressive strength, q_u. Whenever it is considered necessary for proper interpretation, include the graph of the stress-strain data as part of the data reported.

8.5 If the unconfined compressive strength is determined, the sensitivity, S_T, is calculated as follows:

$$S_T = \frac{q_u \text{ (undisturbed specimen)}}{q_u \text{ (remolded specimen)}}$$

9. Report

9.1 The report should include the following:

9.1.1 Identification and visual description of the specimen, including soil classification, symbol, and whether the specimen is undisturbed, remolded, compacted, etc. Also include specimen identifying information, such as project, location, boring number, sample number, depth, etc. Visual descriptions shall be made in accordance with Practice D 2488,

9.1.2 Initial dry density and water content (specify if the water content specimen was obtained before or after shear, and whether from cuttings or the entire specimen),

9.1.3 Degree of saturation (Note 7), if computed,

NOTE 7—The specific gravity determined in accordance with Test Method D 854 is required for calculation of the degree of saturation.

9.1.4 Unconfined compressive strength and shear strength,

9.1.5 Average height and diameter of specimen,

9.1.6 Height-to-diameter ratio,

9.1.7 Average rate of strain to failure, %,

9.1.8 Strain at failure, %,

9.1.9 Liquid and plastic limits, if determined, in accordance with Test Method D 4318,

9.1.10 Failure sketch or photo,

9.1.11 Stress-strain graph, if prepared,

9.1.12 Sensitivity, if determined,

9.1.13 Particle size analysis, if determined, in accordance with Method D 422, and

9.1.14 *Remarks*—Note any unusual conditions or other data that would be considered necessary to properly interpret the results obtained, for example, slickensides, stratification, shells, pebbles, roots, or brittleness, the type of failure (that is, bulge, diagonal shear, etc.).

10. Precision and Bias

10.1 *Precision*—Data are being evaluated to determine the precision of this test method. In addition, Subcommittee D18.05 is seeking pertinent data from users of the test method.

10.2 *Bias*—There is no accepted reference value for this test method, therefore, bias cannot be determined.

11. Keywords

11.1 Cohesive soil; sensitivity; strain-controlled loading; strength; stress-strain relationships; unconfined compression

000277

APPENDIX

(Nonmandatory Information)

X1. Example Data Sheet

UNCONFINED COMPRESSION TEST—UI

Name _____ Date _____ Job No. _____

Location _____

Boring No. _____ Sample No. _____ Depth/Elev. _____

Description of Sample _____

Proving Ring No. _____ Apparatus No. _____

Water Content Determination

Tare No. _____

Wt. Specimen Wet + Tare

Wt. Specimen Dry + Tare

Wt. Water _____

Wt. Tare _____

Wt. Specimen Wet _____

Wt. Specimen Dry _____

Water Content in % Dry Wt.

at 105°C _____ %

Wet Density _____

Dry Density _____

Unconfined Compressive Strength

Initial Diameter D_o _____

Initial Area A_o _____

Initial Height L_o _____

Initial Volume V_o _____

Specific Gravity _____

$$\text{Stress} = \frac{\text{Load}}{\text{Corr. Area}}$$

Test Data

Unit Strain $\frac{\Delta L}{L_o}$

$\frac{L}{D}$ = _____

$$\text{Corr. Area} = \frac{A_o}{1 - \text{Unit Strain}}$$

Elapsed Time-min	Load Dial	Axial Load	Strain Dial	Total Strain	Unit Strain	Corrected Area	Stress	

Type of Sample _____

Attach a photo or sketch of the specimen after failure to this form

Strain Rate _____ %/Min

Remarks _____

The American Society for Testing and Materials takes no position respecting the validity of any patent rights asserted in connection with any item mentioned in this standard. Users of this standard are expressly advised that determination of the validity of any such patent rights, and the risk of infringement of such rights, are entirely their own responsibility.

This standard is subject to revision at any time by the responsible technical committee and must be reviewed every five years and if not revised, either reapproved or withdrawn. Your comments are invited either for revision of this standard or for additional standards and should be addressed to ASTM Headquarters. Your comments will receive careful consideration at a meeting of the responsible technical committee, which you may attend. If you feel that your comments have not received a fair hearing you should make your views known to the ASTM Committee on Standards, 1916 Race St., Philadelphia, PA 19103.

Designation: D 2216 - 92

Standard Test Method for Laboratory Determination of Water (Moisture) Content of Soil and Rock[1]

This standard is issued under the fixed designation D 2216; the number immediately following the designation indicates the year of original adoption or, in the case of revision, the year of last revision. A number in parentheses indicates the year of last reapproval. A superscript epsilon (ε) indicates an editorial change since the last revision or reapproval.

1. Scope

1.1 This test method covers the laboratory determination of the water (moisture) content of soil, rock, and similar materials by mass. For simplicity, the word "material" hereinafter also refers to either soil or rock, whichever is most applicable.

1.2 The water content of a material is defined by this standard as the ratio, expressed as a percentage, of the mass of "pore" or "free" water in a given mass of material to the mass of the solid material.

1.3 The term "solid particles" as used in geotechnical engineering is typically assumed to mean naturally occurring mineral particles of soil and rock that are not readily soluble in water. Therefore, the water content of materials containing extraneous matter (such as cement, and the like) may require special treatment or a qualified definition of water content. In addition, some organic materials may be decomposed by oven drying at the standard drying temperature for this method (110°C). Materials containing gypsum (calcium sulfate dihydrate or other compounds having significant amounts of hydrated water) may present a special problem as this material slowly dehydrates at the standard drying temperature (110°C) and at very low relative humidities, forming a compound (calcium sulfate hemihydrate) which is not normally present in natural materials except in some desert soils. In order to reduce the degree of dehydration of gypsum in those materials containing gypsum, or to reduce decomposition in highly organic soils, it may be desirable to dry these materials at 60°C or in a desiccator at room temperature. Thus, when a drying temperature is used which is different from the standard drying temperature as defined by this test method, the resulting water content may be different from standard water content determined at the standard drying temperature.

NOTE 1—Test Methods D 2974 provides an alternate procedure for determining water content of peat materials.

1.4 Materials containing water with substantial amounts of soluble solids (such as salt in the case of marine sediments) when tested by this method will give a mass of solids which includes the previously soluble solids. These materials require special treatment to remove or account for the presence of precipitated solids in the dry mass of the specimen, or a qualified definition of water content must be used.

1.5 This test method requires several hours for proper drying of the water content specimen. Test Method D 4643 provides for drying of the test specimen in a microwave oven which is a shorter process.

1.6 This standard requires the drying of material in an oven at high temperatures. If the material being dried is contaminated with certain chemicals, health and safety hazards can exist. Therefore, this standard should not be used in determining the water content of contaminated soils unless adequate health and safety precautions are taken.

1.7 *This standard does not purport to address all of the safety problems, if any, associated with its use. It is the responsibility of the user of this standard to establish appropriate safety and health practices and determine the applicability of regulatory limitations prior to use.*

2. Referenced Documents

2.1 *ASTM Standards:*

D 653 Terminology Relating to Soil, Rock, and Contained Fluids[2]

D 2974 Test Methods for Moisture, Ash, and Organic Matter of Peat and Other Organic Soils[2]

D 4220 Practice for Preserving and Transporting Soil Samples[2]

D 4318 Test Method for Liquid Limit, Plastic Limit, and Plasticity Index of Soils[2]

D 4643 Test Method for Determination of Water (Moisture) Content of Soil by the Microwave Oven Method[2]

D 4753 Specification for Evaluating, Selecting, and Specifying Balances and Scales for Use in Soil and Rock Testing[2]

E 145 Specification for Gravity-Convection And Forced-Ventilation Ovens[3]

3. Terminology

3.1 Refer to Terminology D 653 for standard definitions of terms.

3.2 *Description of Term Specific to This Standard:*

3.2.1 *water content* (of a material)—the ratio of the mass of water contained in the pore spaces of soil or rock material, to the solid mass of particles in that material, expressed as a percentage.

[1] This method is under the jurisdiction of ASTM Committee D-18 on Soil and Rock and is the direct responsibility of Subcommittee D18.03 on Texture, Plasticity and Density Characteristics of Soils.

Current edition approved June 15, 1992. Published August 1992. Originally published as D 2216 - 63 T. Last previous edition D 2216 - 90ε[1].

[2] *Annual Book of ASTM Standards*, Vol 04.08.

[3] *Annual Book of ASTM Standards*, Vol 14.02.

4. Summary of Test Method

4.1 A test specimen is dried in an oven to a constant mass. The loss of mass due to drying is considered to be water. The water content is calculated using the mass of water and the mass of the dry specimen.

5. Significance and Use

5.1 For many materials, the water content is one of the most significant index properties used in establishing a correlation between soil behavior and its properties.

5.2 The water content of a material is used in expressing the phase relationships of air, water, and solids in a given volume of material.

5.3 In fine-grained (cohesive) soils, the consistency of a given soil type depends on its water content. The water content of a soil, along with its liquid and plastic limits as determined by Test Method D 4318, is used to express its relative consistency or liquidity index.

6. Apparatus

6.1 *Drying Oven*, thermostatically-controlled, preferably of the forced-draft type, meeting the requirements of Specification E 145 and capable of maintaining a uniform temperature of 110 ± 5°C throughout the drying chamber.

6.2 *Balances*—All balances must meet the requirements of Specification D 4753 and this Section. A Class GP1 balance of 0.01g readability is required for specimens having a mass of up to 200 g (excluding mass of specimen container) and a Class GP2 balance of 0.1g readability is required for specimens having a mass over 200 g.

6.3 *Specimen Containers*—Suitable containers made of material resistant to corrosion and change in mass upon repeated heating, cooling, exposure to materials of varying pH, and cleaning. Containers with close-fitting lids shall be used for testing specimens having a mass of less than about 200 g; while for specimens having a mass greater than about 200 g, containers without lids may be used. One container is needed for each water content determination.

NOTE 2—The purpose of close-fitting lids is to prevent loss of moisture from specimens before initial mass determination and to prevent absorption of moisture from the atmosphere following drying and before final mass determination.

6.4 *Desiccator*—A desiccator cabinet or large desiccator jar of suitable size containing silica gel or anhydrous calcium phosphate. It is preferable to use a desiccant which changes color to indicate it needs reconstitution. See Section 10.5.

NOTE 3—Anhydrous calcium sulfate is sold under the trade name Drierite.

6.5 *Container Handling Apparatus*, gloves, tongs, or suitable holder for moving and handling hot containers after drying.

6.6 *Miscellaneous*, knives, spatulas, scoops, quartering cloth, sample splitters, etc, as required.

7. Samples

7.1 Samples shall be preserved and transported in accordance with Practice 4220 Groups B, C, or D soils. Keep the samples that are stored prior to testing in noncorrodible airtight containers at a temperature between approximately 3 and 30°C and in an area that prevents direct contact with sunlight. Disturbed samples in jars or other containers shall be stored in such a way as to prevent or minimize condensation on the insides of the containers.

7.2 The water content determination should be done as soon as practicable after sampling, especially if potentially corrodible containers (such as thin-walled steel tubes, paint cans, etc.) or plastic sample bags are used.

8. Test Specimen

8.1 For water contents being determined in conjunction with another ASTM method, the specimen mass requirement stated in that method shall be used if one is provided. If no minimum specimen mass is provided in that method then the values given before shall apply.

8.2 The minimum mass of moist material selected to be representative of the total sample, if the total sample is not tested by this method, shall be in accordance with the following:

Maximum particle size (100 % passing)	Standard Sieve Size	Recommended minimum mass of moist test specimen for water content reported to ±0.1 %	Recommended minimum mass of moist test specimen for water content reported to ±1 %
2 mm or less	No. 10	20 g	20 g*
4.75 mm	No. 4	100 g	20 g*
9.5 mm	⅜-in.	500 g	50 g
19.0 mm	¾-in.	2.5 kg	250 g
37.5 mm	1½ in.	10 kg	1 kg
75.0 mm	3-in.	50 kg	5 kg

NOTE—*To be representative not less than 20 g shall be used.

8.2.1 If the total sample is used it does not have to meet the minimum mass requirements provided in the table above. The report shall indicate that the entire sample was used.

8.3 Using a test specimen smaller than the minimum indicated in 8.2 requires discretion, though it may be adequate for the purposes of the test. Any specimen used not meeting these requirements shall be noted in the report of results.

8.4 When working with a small (less than 200g) specimen containing a relatively large gravel particle, it is appropriate not to include this particle in the test specimen. However, any discarded material shall be described and noted in the report of the results.

8.5 For those samples consisting entirely of intact rock, the minimum specimen mass shall be 500 g. Representative portions of the sample may be broken into smaller particles, depending on the sample's size, the container and balance being used and to facilitate drying to constant mass, see Section 10.4.

9. Test Specimen Selection

9.1 When the test specimen is a portion of a larger amount of material, the specimen must be selected to be representative of the water condition of the entire amount of material. The manner in which the test specimen is selected depends on the purpose and application of the test, the material being tested, the water condition, and the sample (from another test, bag, block, and the like).

9.2 For disturbed samples such as trimmings, bag samples, and the like, obtain the test specimen by one of the

000281

llowing methods (listed in order of preference):

9.2.1 If the material is such that it can be manipulated nd handled without significant moisture loss, the material should be mixed and then reduced to the required size by quartering or splitting.

9.2.2 If the material is such that it cannot be thoroughly mixed and/or split, form a stockpile of the material, mixing as much as possible. Take at least five portions of material at random locations using a sampling tube, shovel, scoop, trowel, or similar device appropriate to the maximum particle size present in the material. Combine all the portions for the test specimen.

9.2.3 If the material or conditions are such that a stockpile cannot be formed, take as many portions of the material as possible at random locations that will best represent the moisture condition. Combine all the portions for the test specimen.

9.3 Intact samples such as block, tube, split barrel, and the like, obtain the test specimen by one of the following methods depending on the purpose and potential use of the sample.

9.3.1 Carefully trim at least 3 mm of material from the outer surface of the sample to see if material is layered and to remove material that is drier or wetter than the main portion of the sample. Then carefully trim at least 5 mm, or a thickness equal to the maximum particle size present, from the entire exposed surface or from the interval being tested.

9.3.2 Slice the sample in half. If material is layered see Section 9.3.3. Then carefully trim at least 5 mm, or a thickness equal to the maximum particle size present, from the exposed surface of one half, or from the interval being tested. Avoid any material on the edges that may be wetter or drier than the main portion of the sample.

NOTE 4—Migration of moisture in some cohesionless soils may require that the full section be sampled.

9.3.3 If a layered material (or more than one material type is encountered), select an average specimen, or individual specimens, or both. Specimens must be properly identified as to location, or what they represent, and appropriate remarks entered on data sheets.

10. Procedure

10.1 Determine and record the mass of the clean and dry specimen container (and its lid, if used).

10.2 Select representative test specimens in accordance with Section 9.

10.3 Place the moist test specimen in the container and, if used, set the lid securely in position. Determine the mass of the container and moist material using a balance (See 6.2) selected on the basis of the specimen mass. Record this value.

NOTE 5—To prevent mixing of specimens and yielding of incorrect results, all containers, and lids if used, should be numbered and the container numbers shall be recorded on the laboratory data sheets. The lid numbers should match the container numbers to eliminate confusion.

NOTE 6—To assist in the oven-drying of large test specimens, they should be placed in containers having a large surface area (such as pans) and the material broken up into smaller aggregations.

10.4 Remove the lid (if used) and place the container with moist material in the drying oven. Dry the material to a constant mass. Maintain the drying oven at 110 ± 5°C unless otherwise specified (see 1.3). The time required to obtain constant mass will vary depending on the type of material, size of specimen, oven type and capacity, and other factors. The influence of these factors generally can be established by good judgment, and experience with the materials being tested and the apparatus being used.

NOTE 7—In most cases, drying a test specimen overnight (about 12 to 16 h) is sufficient. In cases where there is doubt concerning the adequacy of drying, drying should be continued until the change in mass after two successive periods (greater than 1 h) of drying is an insignificant amount (less than about 0.1 %). Specimens of sand may often be dried to constant mass in a period of about 4 h, when a forced-draft oven is used.

NOTE 8—Since some dry materials may absorb moisture from moist specimens, dried specimens should be removed before placing moist specimens in the same oven. However, this would not be applicable if the previously dried specimens will remain in the drying oven for an additional time period of about 16 h.

10.5 After the material has dried to constant mass remove the container from the oven (and replace the lid if used). Allow the material and container to cool to room temperature or until the container can be handled comfortably with bare hands and the operation of the balance will not be affected by convection currents and/or its being heated. Determine the mass of the container and oven-dried material using the same balance as used in 10.3. Record this value. Tight fitting lids shall be used if it appears that the specimen is absorbing moisture from the air prior to determination of its dry mass.

NOTE 9—Cooling in a desiccator is acceptable in place of tight fitting lids since it greatly reduces absorption of moisture from the atmosphere during cooling especially for containers without tight fitting lids.

11. Calculation

11.1 Calculate the water content of the material as follows:

$$w = [(M_{cws} - M_{cs})/(M_{cs} - M_c)] \times 100 = \frac{M_w}{M_s} \times 100$$

where:

w = water content, %,
M_{cws} = mass of container and wet specimen, g,
M_{cs} = mass of container and oven dry specimen, g,
M_c = mass of container, g,
M_w = mass of water ($M_w = M_{cws} - M_{cds}$), g, and
M_s = mass of solid particles ($M_s = M_{cds} - M_c$), g.

12. Report

12.1 The report (data sheet) shall include the following:

12.1.1 Identification of the sample (material) being tested, such as boring number, sample number, test number, container number etc.

12.1.2 Water content of the specimen to the nearest 1 % or 0.1 %, as appropriate based on the minimum sample used. If this method is used in concert with another method, the water content of the specimen should be reported to the value required by the test method for which the water content is being determined.

12.1.3 Indicate if test specimen had a mass less than the minimum indicated in 8.2.

12.1.4 Indicate if test specimen contained more than one material type (layered, etc.).

12.1.5 Indicate the method of drying if different from oven-drying at 110 ± 5°C.

12.1.6 Indicate if any material (size and amount) was excluded from the test specimen.

13. Precision and Bias

13.1 *Statement on Bias*—There is no accepted reference value for this test method; therefore, bias cannot be determined.

13.2 *Statements on Precision:*

13.2.1 *Single-Operator Precision*—The single-operator coefficient of variation has been found to be 2.7 percent. Therefore, results of two properly conducted tests by the same operator with the same equipment should [illegible]e considered suspect unless they differ by more [illegible] 8 percent of their mean.

13.2.2 *Multilaboratory Precision*—The multilaboratory coefficient of variation has been found to be 5.0 percent. Therefore, results of two properly conducted tests by different operators using different equipment should not be considered suspect unless they differ by more than 14.0 percent of their mean.

14. Keywords

14.1 consistency; index property; laboratory; moisture analysis; moisture content; soil aggregate; water content

The American Society for Testing and Materials takes no position respecting the validity of any patent rights asserted in connection with any item mentioned in this standard. Users of this standard are expressly advised that determination of the validity of any such patent rights, and the risk of infringement of such rights, are entirely their own responsibility.

This standard is subject to revision at any time by the responsible technical committee and must be reviewed every five years and if not revised, either reapproved or withdrawn. Your comments are invited either for revision of this standard or for additional standards and should be addressed to ASTM Headquarters. Your comments will receive careful consideration at a meeting of the responsible technical committee, which you may attend. If you feel that your comments have not received a fair hearing you should make your views known to the ASTM Committee on Standards, 1916 Race St., Philadelphia, PA 19103.

Standard Test Method for One-Dimensional Consolidation Properties of Soils[1]

This standard is issued under the fixed designation D 2435; the number immediately following the designation indicates the year of original adoption or, in the case of revision, the year of last revision. A number in parentheses indicates the year of last reapproval. A superscript epsilon (ε) indicates an editorial change since the last revision or reapproval.

1. Scope

1.1 This test method covers procedures for determining the magnitude and rate of consolidation of soil when it is restrained laterally and drained axially while subjected to incrementally applied controlled-stress loading. Two alternative procedures are provided as follows:

1.1.1 *Test Method A*—This test method is performed with constant load increment duration of 24 h, or multiples thereof. Time-deformation readings are required on a minimum of two load increments.

1.1.2 Test Method B—Time-deformation readings are required on all load increments. Successive load increments are applied after 100 % primary consolidation is reached, or at constant time increments as described in Test Method A.

NOTE 1—The determination of the rate and magnitude of consolidation of soil when it is subjected to controlled-strain loading is covered by Test Method D 4186.

1.2 This test method is most commonly performed on undisturbed samples of fine grained soils naturally sedimented in water, however, the basic test procedure is applicable, as well, to specimens of compacted soils and undisturbed samples of soils formed by other processes such as weathering or chemical alteration. Evaluation techniques specified in this test method are generally applicable to soils naturally sedimented in water. Tests performed on other soils such as compacted and residual (weathered or chemically altered) soils may require special evaluation techniques.

1.3 It shall be the responsibility of the agency requesting this test to specify the magnitude and sequence of each load increment, including the location of a rebound cycle, if required, and, for Test Method A, the load increments for which time-deformation readings are desired.

NOTE 2—Time-deformation readings are required to determine the time for completion of primary consolidation and for evaluating the coefficient of consolidation, c_v. Since c_v varies with stress level and load increment (loading or unloading), the load increments with timed readings must be selected with specific reference to the individual project. Alternatively, the requesting agency may specify Test Method B wherein the time-deformation readings are taken on all load increments.

1.4 The values stated in SI units are to be regarded as the standard. The values stated in inch-pound units are approximate and given for guidance only. Reporting of test results in units other than SI shall not be regarded as nonconformance with this test method.

1.4.1 In the engineering profession it is customary practice to use, interchangeably, units representing both mass and force, unless dynamic calculations ($F = Ma$) are involved. This implicitly combines two separate systems of units, that is, the absolute system and the gravimetric system. It is scientifically undesirable to combine two separate systems within a single standard. This test method has been written using SI units; however, inch-pound conversions are given in the gravimetric system, where the pound (lbf) represents a unit of force (weight). The use of balances or scales recording pounds of mass (lbm), or the recording of density in lb/ft^3 should not be regarded as nonconformance with this test method.

1.5 *This standard does not purport to address the safety problems associated with its use. It is the responsibility of the user of this standard to establish appropriate safety and health practices and determine the applicability of regulatory limitations prior to use.*

2. Referenced Documents

2.1 *ASTM Standards:*

D 422 Method for Particle-Size Analysis of Soils[2]
D 653 Terminology Relating to Soil and Rock[2]
D 854 Test Method for Specific Gravity of Soils[2]
D 1587 Practice For Thin-Walled Tube Sampling of Soils[2]
D 2216 Method for Laboratory Determination of Water (Moisture) Content of Soil, Rock, and Soil-Aggregate Mixtures[2]
D 2487 Classification of Soils for Engineering Purposes[3]
D 2488 Practice for Description and Identification of Soils (Visual-Manual Procedure)[3]
D 3550 Practice for Ring-Lined Barrel Sampling of Soils[2]
D 4186 Test Method for One-Dimensional Consolidation Properties of Soils Using Controlled-Strain Loading[2]
D 4220 Practice for Preserving and Transporting Soil Samples[2]
D 4318 Test Method for Liquid Limit, Plastic Limit, and Plasticity Index of Soils[2]
D 4452 Methods for X-Ray Radiography of Soil Samples[2]
D 4546 Test Methods for One-Dimensional Swell or Settlement Potential of Cohesive Soils[3]

3. Terminology

3.1 *Definitions*—The definitions of terms used in this test method shall be in accordance with Terminology D 653.

[1] This test method is under the jurisdiction of ASTM Committee D-18 on Soil and Rock and is the direct responsibility of subcommittee D18.05 on Structural Properties of Soil.

Current edition approved June 29, 1990. Published November 1990. Originally published as D 2435 - 65T. Last previous edition D 2435 - 80.

[2] *Annual Book of ASTM Standards*, Vol 04.08.

[3] *Annual Book of ASTM Standards*, Vols 04.08 and 08.04.

$H_o = 19.050$ mm

$H_s = 8.538$ mm

Void Ratio and Strain Information

Load Increment (kPa)	d_f corrected (mm)	$\Sigma\Delta H$ (mm)	ε $\Sigma\Delta H/H_o$ (%)	H $(H_o-\Delta H)$ (mm)	e $(H-H_s)/H_s$
initial	5.3300	0	0	19.0500	1.231
5	5.3012	0.0288	0.15	19.0212	1.228
10	5.2743	0.0557	0.29	18.9943	1.225
20	5.2167	0.1133	0.59	18.9367	1.218
40	5.1161	0.2139	1.12	18.8361	1.206
80	4.9433	0.3867	2.03	18.6633	1.186
160	4.4740	0.8560	4.49	18.1940	1.131
320	2.9804	2.3496	12.33	16.7004	0.956
640	1.8908	3.4392	18.05	15.6108	0.828
1280	0.9860	4.3440	22.80	14.7060	0.722
320	1.0747	4.2553	22.34	14.7947	0.733
80	1.4000	3.9300	20.63	15.1200	0.771
20	1.8169	3.5131	18.44	15.5369	0.820
5	2.2319	3.0981	16.26	15.9519	0.868

Coefficient of Consolidation, c_v

d_{50} corrected (mm)	$\Sigma\Delta H$ (mm)	ε_{50} (%)	H_{50} (mm)	e_{50}	t_{50} (sec)	c_v (mm^2/sec)
5.0604	0.2696	1.42	18.780	1.200	52	3.34×10^{-1}
4.7945	0.5355	2.81	18.515	1.169	144	1.17×10^{-1}
3.7861	1.5439	8.10	17.506	1.059	516	2.93×10^{-2}
2.4983	2.8317	14.86	16.218	0.900	282	4.59×10^{-2}
1.5077	3.8223	20.06	15.228	0.784	156	7.32×10^{-2}

FIG. 1 Consolidation Test Summary

4. Summary of Test Method

4.1 In this test method a soil specimen is restrained laterally and loaded axially with total stress increments. Each stress increment is maintained until excess pore water pressures are completely dissipated. During the consolidation process, measurements are made of change in the specimen height and these data are used to determine the relationship between the effective stress and void ratio or strain, and the rate at which consolidation can occur by evaluating the coefficient of consolidation.

5. Significance and Use

5.1 The data from the consolidation test are used to estimate the magnitude and rate of both differential and total settlement of a structure or earthfill. Estimates of this type are of key importance in the design of engineered structures and the evaluation of their performance.

5.2 The test results can be greatly affected by sample disturbance. Careful selection and preparation of test specimens is required to minimize disturbance.

5.3 Consolidation test results are dependent upon the magnitude of the load increments. Traditionally, the load is doubled for each increment resulting in a load-increment ratio of 1. For undisturbed samples, this load procedure has provided data from which estimates of the preconsolidation pressure also referred to as the maximum past pressure, using established evaluation techniques, compare directly with field measurement. Other load schedules may be used to model particular field conditions or meet special requirements. For example, it may be desirable to inundate and load the specimen in accordance with the wetting or loading pattern expected in the field in order to best simulate the response. Smaller than standard load increment ratios may be desirable for soils that are highly sensitive or whose response is highly dependent on strain rate. The test method specified to estimate the preconsolidation pressure provides a simple technique to verify that one set of time readings are taken after the preconsolidation pressure. Several other evaluation techniques exist and may yield different estimates of the preconsolidation pressure. Therefore, the requesting agency may specify an alternate technique to estimate the preconsolidation pressure.

5.4 Consolidation test results are dependent upon the duration of each load increment. Traditionally, the load duration is the same for each increment and equal to 24 h. For some soils, the rate of consolidation is such that complete consolidation (dissipation of excess pore pressure) will require more than 24 h. The apparatus in general use does not have provisions for formal verification of pore pressure dissipation. It is necessary to use an interpretation technique which indirectly determines that consolidation is complete. This test method specifies two techniques, however the requesting agency may specify an alternative technique and still be in conformance with this test method.

5.5 The apparatus in general use for this test method does not have provisions for verification of saturation. Most undisturbed samples taken from below the water table will be saturated. However, the time rate of deformation is very sensitive to degree of saturation and caution must be exercised regarding estimates for duration of settlements when partially saturated conditions prevail. The extent to which partial saturation influences the test results may be a part of the test evaluation and may include application of theoretical models other than conventional consolidation theory. Alternatively, the test may be performed using an apparatus equipped to saturate the specimen.

5.6 This test method uses conventional consolidation theory based on Terzaghi's consolidation equation to compute the coefficient of consolidation, c_v. The analysis is based upon the following assumptions:

5.6.1 The soil is saturated and has homogeneous properties;

5.6.2 The flow of pore water is in the vertical direction;

5.6.3 The compressibility of soil particles and pore water is negligible compared to the compressibility of the soil skeleton;

000285

5.6.4 The stress-strain relationship is linear over the load crement;

5.6.5 The ratio of soil permeability to soil compressibility is constant over the load increment; and

5.6.6 Darcy's law for flow through porous media applies.

6. Apparatus

6.1 *Load Device*—A suitable device for applying vertical loads or total stresses) to the specimen. The device should be capable of maintaining specified loads for long periods of time with an accuracy of ± 0.5 % of the applied load and should permit quick application of a given load increment without significant impact.

NOTE 3—Load application generally should be completed in a time corresponding to $0.01 \cdot t_{100}$ or less. For soils where primary consolidation is completed in 3 min, load application should be less than 2 s.

6.2 *Consolidometer*—A device to hold the specimen in a ring that is either fixed to the base or floating (supported by friction on periphery of specimen) with porous disks on each face of the specimen. The inside diameter of the ring shall be determined to a tolerance of 0.075 mm (0.003 in.). The consolidometer shall also provide a means of submerging the specimen, for transmitting the concentric vertical load to the porous disks, and for measuring the change in height of specimen.

6.2.1 *Minimum Specimen Diameter*—The minimum specimen diameter shall be 50 mm (2.00 in.).

6.2.2 *Minimum Specimen Height*—The minimum initial pecimen height shall be 12 mm (0.5 in.), but shall be not less han ten times the maximum particle diameter.

NOTE 4—If large particles are found in the specimen after testing, include in the report this visual observation or the results of a particle size analysis in accordance with Method D 422 (except the minimum sample size requirement shall be waived).

6.2.3 *Minimum Specimen Diameter-to-Height Ratio*—The minimum specimen diameter-to-height ratio shall be 2.5.

NOTE 5—The use of greater diameter-to-height ratios is recommended. To minimize the effects of friction between the sides of the specimen and ring, a diameter-to-height ratio greater than four is preferable.

6.2.4 *Specimen Ring Rigidity*—The rigidity of the ring shall be such that, under hydrostatic stress conditions in the specimen, the change in diameter of the ring will not exceed 0.03 % of the diameter under the greatest load applied.

6.2.5 *Specimen Ring Material*—The ring shall be made of a material that is noncorrosive in relation to the soil tested. The inner surface shall be highly polished or shall be coated with a low-friction material. Silicone grease or molybdenum disulfide is recommended; polytetrafluoroethylene is recommended for nonsandy soils.

6.3 *Porous Disks*—The porous disks shall be of silicon carbide, aluminum oxide, or similar noncorrosive material. The grade of the disks shall be fine enough to prevent intrusion of soil into the pores. If necessary, a filter paper (see lote 6) may be used to prevent intrusion of the soil into the disks; however, the permeability of the disks, and filter paper, if used, must be at least one order of magnitude higher than that of the specimen.

NOTE 6—Whatman No. 54 filter paper has been found to meet requirements for permeability and durability.

6.3.1 *Diameter*—The diameter of the top disk shall be 0.2 to 0.5 mm (0.01 to 0.02 in.) less than the inside diameter of the ring. If a floating ring is used, the bottom disk shall have the same diameter as the top disk.

NOTE 7—The use of tapered disks is recommended, with the larger diameter in contact with the soil.

6.3.2 *Thickness*—Thickness of the disks shall be sufficient to prevent breaking. The top disk shall be loaded through a corrosion-resistant plate of sufficient rigidity to prevent breakage of the disk.

6.3.3 *Maintenance*—The disks shall be clean and free from cracks, chips, and nonuniformities. New porous disks should be boiled for at least 10 minutes and left in the water to cool to ambient temperature before use. Immediately after each use, clean the porous disks with a nonabrasive brush and boil to remove clay particles that may reduce their permeability. It is recommended that porous disks be stored in a jar with deaired water between tests.

6.4 *Specimen Trimming Device*—A trimming turntable or a cylindrical cutting ring may be used for trimming the sample down to the inside diameter of the consolidometer ring with a minimum of disturbance. A cutter having the same inside diameter as the specimen ring shall attach to or be integral with the specimen ring. The cutter shall have a sharp edge, a highly polished surface and be coated with a low-friction material. Alternatively, a turntable or trimming lathe may be used. The cutting tool must be properly aligned to form a specimen of the same diameter as that of the ring.

6.5 *Deformation Indicator*—To measure change in specimen height, with a readability of 0.0025 mm (0.0001 in.).

6.6 *Miscellaneous Equipment*—Including timing device with 1 s readability, distilled or demineralized water, spatulas, knives, and wire saws, used in preparing the specimen.

6.7 *Balances*, in accordance with Method D 2216.

6.8 *Drying Oven*, in accordance with Method D 2216.

6.9 *Water Content Containers*, in accordance with Method D 2216.

6.10 Environment—Tests shall be performed in an environment where temperature fluctuations are less than ± 4°C (± 7°F) and there is no direct exposure to sunlight.

7. Calibration

7.1 The measured vertical deformations must be corrected for apparatus flexibility whenever the calibration correction determined in 7.4 exceeds 5 % of the measured deformation and in all tests where filter paper disks are used.

7.2 Assemble the consolidometer with a copper or hard steel disk of approximately the same height as the test specimen and 1 mm (0.04 in.) smaller in diameter than the ring, in place of the sample. Moisten the porous disks. If filter papers are to be used (see 6.3), they should be moistened and sufficient time (a minimum of 2 min.) allowed for the moisture to be squeezed from them during each increment of the calibration process.

7.3 Load and unload the consolidometer as in the test and measure the deformation for each load applied. When filter papers are used it is imperative that calibration be performed following the exact loading and unloading schedule to be used. This is due to the inelastic deformation characteristics of filter paper. Recalibration for tests without filter paper need be done only on an annual basis, or after replacement and reassembly of apparatus components.

7.4 At each load applied, plot or tabulate the corrections to be applied to the measured deformation of the test specimen. Note that the metal disk will deform also; however, the correction due to this deformation will be negligible for all but extremely stiff soils. If necessary, the compression of the metal disk can be computed and applied to the corrections.

8. Sampling

8.1 Practices D 1587 and D 3550 cover procedures and apparatus that may be used to obtain undisturbed samples generally satisfactory for testing. Specimens may also be trimmed from large undisturbed block samples fabricated and sealed in the field. Finally, remolded specimens may be prepared from bulk samples to density and moisture conditions stipulated by the agency requesting the test.

8.2 Undisturbed samples destined for testing in accordance with this test method shall be preserved, handled, and transported in accordance with the practices for Group C and D samples in Practices D 4220. Bulk samples for remolded specimens should be handled and transported in accordance with the practice for Group B samples.

8.3 *Storage*—Storage of sealed samples should be such that no moisture is lost during storage, that is, no evidence of partial drying of the ends of the samples or shrinkage. Time of storage should be minimized, particularly when the soil or soil moisture is expected to react with the sample tubes.

8.4 The quality of consolidation test results diminishes greatly with sample disturbance. It should be recognized that no sampling procedure can ensure completely undisturbed samples. Therefore, careful examination of the sample is essential in selection of specimens for testing.

NOTE 8—Examination for sample disturbance, stones, or other inclusions, and selection of specimen location is greatly facilitated by x-ray radiography of the samples (see Methods D 4452).

9. Specimen Preparation

9.1 All possible precautions should be taken to minimize disturbance of the soil or changes in moisture and density during specimen preparation. Avoid vibration, distortion, and compression.

9.2 Prepare test specimens in an environment where soil moisture change during preparation is minimized.

NOTE 9—A high humidity environment is usually used for this purpose.

9.3 Trim the specimen and insert it into the consolidation ring. When specimens come from undisturbed soil collected using sample tubes, the inside diameter of the tube shall be at least 5 mm (0.25 in.) greater than the inside diameter of the consolidation ring, except as noted in 9.4 and 9.5. It is recommended that either a trimming turntable or cylindrical cutting ring be used to cut the soil to the proper diameter. When using a trimming turntable, make a complete perimeter cut, reducing the specimen diameter to the inside diameter of the consolidation ring. Carefully insert the specimen into the consolidation ring, by the width of the cut, with a minimum of force. Repeat until the specimen protrudes from the bottom of the ring. When using a cylindrical cutting ring, trim the soil to a gentle taper in front of the cutting edge. After the taper is formed, advance the cutter a small distance to form the final diameter. Repeat the process until the specimen protrudes from the ring.

9.4 Fibrous soils, such as peat, and those soils that are easily damaged by trimming, may be transferred directly from the sampling tube to the ring, provided that the ring has the same diameter as the sample tube.

9.5 Specimens obtained using a ring-lined sampler may be used without prior trimming, provided they comply with the requirements of Practice D 3550 and this test method.

9.6 Trim the specimen flush with the plane ends of the ring. The specimen may be recessed slightly below the top of the ring, to facilitate centering of the top stone, by partial extrusion and trimming of the bottom surface. For soft to medium soils, a wire saw should be used for trimming the top and bottom of the specimen to minimize smearing. A straightedge with a sharp cutting edge may be used for the final trim after the excess soil has first been removed with a wire saw. For stiff soils, a sharpened straightedge alone may be used for trimming the top and bottom. If a small particle is encountered in any surface being trimmed, it should be removed and the resulting void filled with soil from the trimmings.

NOTE 10—If, at any stage of the test, the specimen swells beyond its initial height, the requirement of lateral restraint of the soil dictates the use of a recessed specimen or the use of a specimen ring equipped with an extension collar of the same inner diameter as the specimen ring. At no time should the specimen extend beyond the specimen ring or extension collar.

9.7 Determine the initial wet mass of the specimen, M_{T_o}, in the consolidation ring by measuring the mass of the ring with specimen and subtracting the tare mass of the ring.

9.8 Determine the initial height, H_o, of the specimen to the nearest 0.025 mm (0.001 in.) by taking the average of at least four evenly spaced measurements over the top and bottom surfaces of the specimen using a dial comparator or other suitable measuring device.

9.9 Compute the initial volume, V_o, of the specimen to the nearest 0.25 cm^3 (0.015 $in.^3$) from the diameter of the ring and the initial specimen height.

9.10 Obtain two or three natural water content determinations of the soil in accordance with Method D 2216 from material trimmed adjacent to the test specimen if sufficient material is available.

9.11 When index properties are specified by the requesting agency, store the remaining trimmings taken from around the specimen and determined to be similar material in a sealed container for determination as described in Section 10.

000287

10. Soil Index Property Determinations

10.1 The determination of index properties is an important adjunct to but not a requirement of the consolidation test. These determinations when specified by the requesting agency should be made on the most representative material possible. When testing uniform materials, all index tests may be performed on adjacent trimmings collected in 9.11. When samples are heterogeneous or trimmings are in short supply, index tests should be performed on material from the test specimen as obtained in 11.6, plus representative trimmings collected in 9.11.

10.2 *Specific Gravity*—The specific gravity shall be determined in accordance with Test Method D 854 on material from the sample as specified in 10.1. The specific gravity from another sample judged to be similar to that of the test specimen may be used for calculation in 12.2.5 whenever an accurate void ratio is not needed.

10.3 *Atterberg Limits*—The liquid limit, plastic limit and plasticity index shall be determined in accordance with Test Method D 4318 using material from the sample as specified in 10.1. Determination of the Atterberg limits are necessary for proper material classification but are not a requirement of this test method.

10.4 *Particle Size Distribution*—The particle size distribution shall be determined in accordance with Method D 422 (except the minimum sample size requirement shall be waived) on a portion of the test specimen as obtained in 11.6. A particle size analysis may be helpful when visual inspection indicates that the specimen contains a substantial fraction of coarse grained material but is not a requirement of this test method.

11. Procedure

11.1 Preparation of the porous disks and other apparatus will depend on the specimen being tested. The consolidometer must be assembled in such a manner as to prevent a change in water content of the specimen. Dry porous disks and filters must be used with dry, highly expansive soils and may be used for all other soils. Damp disks may be used for partially saturated soils. Saturated disks may be used when the specimen is saturated and known to have a low affinity for water. Assemble the ring with specimen, porous disks, filter disks (when needed) and consolidometer. If the specimen will not be inundated shortly after application of the seating load (see 11.2), enclose the consolidometer in a loose fitting plastic or rubber membrane to prevent change in specimen volume due to evaporation.

NOTE 11—In order to meet the stated objectives of this test method, the specimen must not be allowed to swell in excess of its initial height prior to being loaded beyond its preconsolidation pressure. Detailed procedures for the determination of one-dimensional swell or settlement potential of cohesive soils is covered by Test Method D 4546.

11.2 Place the consolidometer in the loading device and apply a seating pressure of 5 kPa (100 lbf/ft^2). Immediately after application of the seating load, adjust the deformation indicator and record the initial zero reading, d_o. If necessary, add additional load to keep the specimen from swelling. Conversely, if it is anticipated that a load of 5 kPa (100 lbf/ft^2) will cause significant consolidation of the specimen, reduce the seating pressure to 2 or 3 kPa (about 50 lbf/ft^2) or less.

11.3 If the test is performed on an intact specimen that was either saturated under field conditions or obtained below the water table, inundate shortly after application of the seating load. As inundation and specimen wetting occur, increase the load as required to prevent swelling. Record the load required to prevent swelling and the resulting deformation reading. If specimen inundation is to be delayed to simulate specific conditions, then inundation must occur at a pressure that is sufficiently large to prevent swell. In such cases, apply the required load and inundate the specimen. Take time deformation readings during the inundation period as specified in 11.5. In such cases, note in the test report the pressure at inundation and the resulting changes in height.

11.4 The specimen is to be subjected to increments of constant total stress. The duration of each increment shall conform to guidelines specified in 11.5. The specific loading schedule will depend on the purpose of the test, but should conform to the following guidelines. If the slope and shape of a virgin compression curve or determination of the preconsolidation pressure is required, the final pressure shall be equal to or greater than four times the preconsolidation pressure. In the case of overconsolidated clays, a better evaluation of recompression parameters may be obtained by imposing an unload-reload cycle after the preconsolidation pressure has been defined. Details regarding location and extent of an unload-reload cycle is the option of the agency requesting the test (see 1.3), however, unloading shall always span at least two decrements of pressure.

11.4.1 The standard loading schedule shall consist of a load increment ratio (LIR) of one which is obtained by doubling the pressure on the soil to obtain values of approximately 12, 25, 50, 100, 200, etc. kPa (250, 500, 1000, 2000, 4000, etc. lbf/ft^2).

11.4.2 The standard rebound or unloading schedule should be selected by halving the pressure on the soil (that is, use the same increments of 11.4.1, but in reverse order). However, if desired, each successive load can be only one-fourth as large as the preceding load, that is, skip a decrement.

11.4.3 An alternative loading, unloading, or reloading schedule may be employed that reproduces the construction stress changes or obtains better definition of some part of the stress deformation (compression) curve, or aids in interpreting the field behavior of the soil.

NOTE 12—Small increments may be desirable on highly compressible specimens or when it is desirable to determine the preconsolidation pressure with more precision. It should be cautioned, however, that load increment ratios less than 0.7 and load increments very close to the preconsolidation pressure may preclude evaluation for the coefficient of consolidation, c_v, and the end-of-primary consolidation as discussed in Section 12.

11.5 Before each pressure increment is applied, record the height or change in height, d_f, of the specimen. Two alternative procedures are available that specify the time sequence of readings and the required minimum load duration. Longer durations are often required during specific load increments to define the slope of the characteristic straight line secondary compression portion of the deformation versus log of time graph. For such increments, sufficient readings should be taken near the end of the pressure increment to define this straight line portion. It is not necessary to increase the duration of other pressure increments during the test.

11.5.1 *Test Method A*—The standard load increment duration shall be 24 h. For at least two load increments, including at least one load increment after the preconsolidation pressure has been exceeded, record the height or change in height, d, at time intervals of approximately 0.1, 0.25, 0.5, 1, 2, 4, 8, 15 and 30 min, and 1, 2, 4, 8 and 24 h (or 0.09, 0.25, 0.49, 1, 4, 9 min etc. in using 12.3.2 to present time-deformation data), measured from the time of each incremental pressure application. Take sufficient readings near the end of the pressure increment period to verify that primary consolidation is completed. For some soils, a period of more than 24 h may be required to reach the end-of-primary consolidation (as determined in 12.3.1.1 or 12.3.2.3). In such cases, load increment durations greater than 24 h are required. The load increment duration for these tests is usually taken at some multiple of 24 h and should be the standard duration for all load increments of the test. The decision to use a time interval greater than 24 h is usually based on experience with particular types of soils. If, however, there is a question as to whether a 24 h period is adequate, a record of height or change in height with time should be made for the initial load increments in order to verify the adequacy of a 24 h period. Load increment durations other than 24 h shall be noted in the report. For pressure increments where time versus deformation data are not required, leave the load on the specimen for the same length of time as when time versus deformation readings are taken.

11.5.2 *Test Method B*—For each increment, record the height or change in height, d, at time intervals of approximately 0.1, 0.25, 0.5, 1, 2, 4, 8, 15, 30 min, and 1, 2, 4, 8 and 24 h (or 0.09, 0.25, 0.49, 1, 4, 9, min, etc. if using 12.3.2 to present time deformation data), measured from the time of each incremental pressure application. The standard load increment duration shall exceed the time required for completion of primary consolidation as determined by 12.3.1.1, 12.3.2.3 or a criterion set by the requesting agency. For each increment where it is impossible to verify the end of primary consolidation (for example, low LIR or rapid consolidation), the load increment duration shall be constant and exceed the time required for primary consolidation of an increment applied after the preconsolidation pressure and along the virgin compression curve. Where secondary compression must be evaluated, apply pressures for longer periods. The report shall contain the load increment duration for each increment.

NOTE 13—The suggested time intervals for recording height or change in height are for typical soils and load increments. It is often desirable to change the reading frequency to improve interpretation of the data. More rapid consolidation will require more frequent readings. For most soils, primary consolidation during the first load decrements will be complete in less time (typically one-tenth) than would be required for a load increment along the virgin compression curve, however, at very low stresses the rebound time can be longer.

11.6 To minimize swell during disassembly, rebound the specimen back to the seating load (5 kPa). Once height changes have ceased (usually overnight), dismantle quickly after releasing the final small load on the specimen. Remove the specimen and the ring from the consolidometer and wipe any free water from the ring and specimen. Determine the mass of the specimen in the ring and subtract the tare mass of the ring to obtain the final wet specimen mass, M_{T_f}. The most accurate determination of the specimen dry mass and water content is found by drying the entire specimen at the end of the test. If the soil sample is homogeneous and sufficient trimmings are available for the specified index testing (see 9.11), then determine the final water content, w_f, in accordance with Method D 2216 and dry mass of solids, M_d, using the entire specimen. If the soil is heterogeneous or more material is required for the specified index testing, then determine the final water content, w_{f_p}, in accordance with Method D 2216 using a small wedge shaped section of the specimen. The remaining undried material should be used for the specified index testing.

12. Calculation

12.1 Calculations as shown are based on the use of SI units. Other units are permissible, provided the appropriate conversion factors are used to maintain consistency of units throughout the calculations. See 1.4.1 for additional comments on the use of inch-pound units.

12.2 *Specimen Properties:*

12.2.1 Obtain the dry mass of the total specimen, M_d, by direct measurement or for the case where part of the specimen is used for index testing, calculate the dry mass as follows:

$$M_d = \frac{M_{T_f}}{1 + w_{f_p}}$$

where:

M_{T_f} = moist mass of total specimen after test, g or Mg, and
w_{f_p} = water content (decimal form) wedge of specimen taken after test.

12.2.2 Calculate the initial and final water content, in percent, as follows:

$$\text{initial water content: } w_0 = \frac{M_{T_o} - M_d}{M_d} \times 100$$

$$\text{final water content: } w_f = \frac{M_{T_f} - M_d}{M_d} \times 100$$

where:

M_d = dry mass of specimen, g or Mg, and
M_{T_o} = moist mass of specimen before test, g or Mg.

12.2.3 Calculate the initial dry density of the specimen as follows:

$$\rho_d = \frac{M_d}{V_o}$$

000289

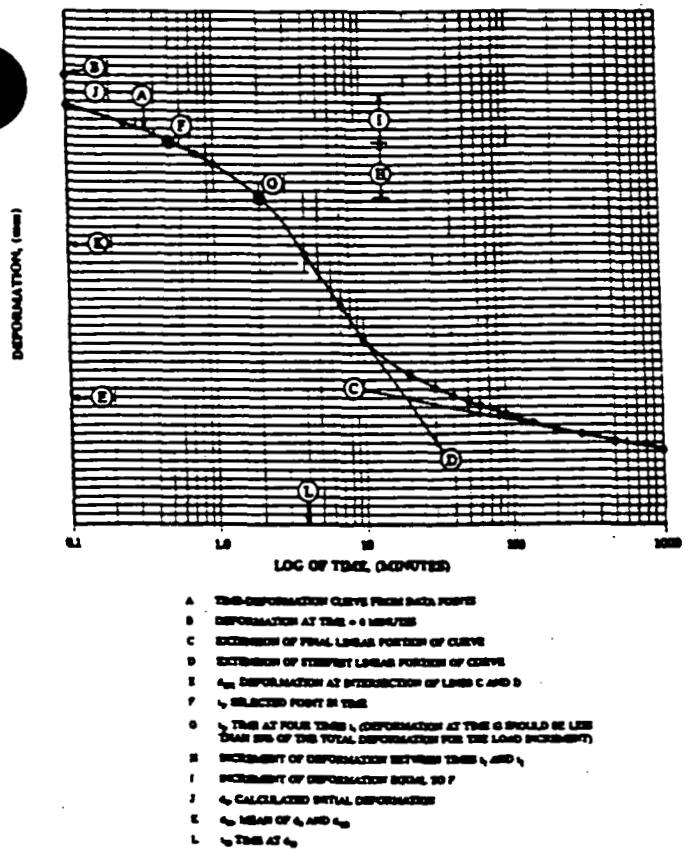

FIG. 2 Time-Deformation Curve From Log of Time Method

where:
ρ_d = dry density of specimen, g/cm³ or Mg/m³, and
V_o = initial volume of specimen, cm³ or m³.

12.2.4 Calculate the dry unit weight of the specimen as follows:

$$\gamma_d = 9.8 \times \rho_d, \text{ in kN/m}^3$$

$$\gamma_d = 62.43 \times \rho_d, \text{ in lbf/ft}^3$$

12.2.5 Compute the volume of solids as follows:

$$V_s = \frac{M_d}{G\rho_w}$$

where:
G = specific gravity of the solids, and
ρ_w = density of water, 1.0 g/cm³ or Mg/m³

12.2.6 Since the cross-sectional area of the specimen is constant throughout the test, it is convenient for subsequent calculations to introduce the term "equivalent height of solids," defined as follows:

$$H_s = \frac{V_s}{A}$$

where:
A = specimen area, cm² or m².

12.2.7 Calculate void ratio before and after test as follows:

$$\text{void ratio before test: } e_o = \frac{H_o - H_s}{H_s}$$

$$\text{void ratio after test: } e_f = \frac{H_f - H_s}{H_s}$$

where:
H_o = initial specimen height, cm or m, and
H_f = final specimen height, cm or m.

12.2.8 Calculate the degree of saturation, in percent, before and after test as follows:

$$\text{initial degree of saturation: } S_o = \frac{M_{T_o} - M_d}{A\rho_w(H_o - H_s)} \times 100$$

$$\text{final degree of saturation: } S_f = \frac{M_{T_f} - M_d}{A\rho_w(H_f - H_s)} \times 100$$

12.3 *Time—Deformation Properties*—From those increments of load where time-deformation readings are obtained, two alternative procedures (see 12.3.1 or 12.3.2) are provided to present the data, determine the end-of-primary consolidation and compute the rate of consolidation. Alternatively, the requesting agency may specify a method of its choice and still be in conformance with this test method. The deformation readings may be presented as measured deformation, deformation corrected for apparatus compressibility or converted to strain (see 12.4).

12.3.1 Referring to Fig. 2, plot the deformation readings, d, versus the log of time (normally in minutes) for each increment of load.

12.3.1.1 First draw a straight line through the points representing the final readings which exhibit a straight line trend and constant slope (C).[4] Draw a second straight line tangent to the steepest part of the deformation-log time curve (D). The intersection represents the deformation, d_{100}, and time, t_{100}, corresponding to 100 % primary consolidation (E). Compression in excess of the above estimated 100 % primary consolidation is defined as secondary compression.

12.3.1.2 Find the deformation representing 0 % primary consolidation by selecting any two points that have a time ratio of 1 to 4. The deformation at the larger of the two times should be greater than ¼, but less than ½ of the total deformation for the load increment. The deformation corresponding to 0 % primary consolidation is equal to the deformation at the smaller time, less the difference in deformation for the two selected times.

12.3.1.3 The deformation, d_{50}, corresponding to 50 % primary consolidation is equal to the average of the deformations corresponding to the 0 and 100 % deformations. The time, t_{50}, required for 50 % consolidation may be found graphically from the deformation-log time curve by observing the time that corresponds to 50 % of the primary consolidation on the curve.

12.3.2 Referring to Fig. 3, plot the deformation readings, d, versus the square root of time (normally in minutes) for each increment of load.

[4] The boldface numbers in parentheses refer to a list of references at the end of the text.

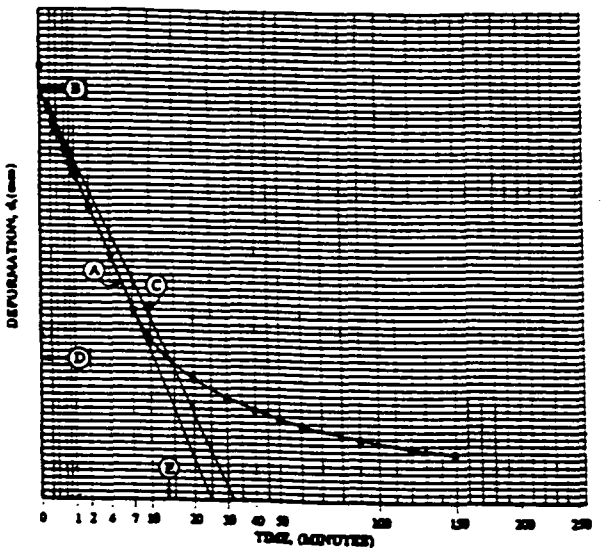

FIG. 3 Time-Deformation Curve From Square Root of Time Method

12.3.2.1 First draw a straight line through the points representing the initial readings that exhibit a straight line trend. Extrapolate the line back to $t = 0$ and obtain the deformation ordinate representing 0 % primary consolidation.

12.3.2.2 Draw a second straight line through the 0 % ordinate so that the abscissa of this line is 1.15 times the abscissa of the first straight line through the data. The intersection of this second line with the deformation-square root of time curve is the deformation, d_{90}, and time, t_{90}, corresponding to 90 % primary consolidation.

12.3.2.3 The deformation at 100 % consolidation is 1/9 more than the difference in deformation between 0 and 90 % consolidation. The time of primary consolidation, t_{100}, may be taken at the intersection of the deformation-square root of time curve and this deformation ordinate. The deformation, d_{50}, corresponding to 50 % consolidation is equal to the deformation at 5/9 of the difference between 0 and 90 % consolidation.

12.3.3 Compute the coefficient of consolidation for each increment of load using the following equation and values appropriate to the chosen method of interpretation:

$$c_v = \frac{TH^2_{D_{50}}}{t}$$

where:

T = a dimensionless time factor:
for method 12.3.1 use 50 % consolidation with $T = T_{50} = 0.197$,
for method 12.3.2 use 90 % consolidation with $T = T_{90} = 0.848$,

t = time corresponding to the particular degree of consolidation, s or min;
for method 12.3.1 use $t = t_{50}$,
for method 12.3.2 use $t = t_{90}$, and

$H_{D_{50}}$ = length of the drainage path at 50 % consolidation, cm or m
for double-sided drainage $H_{D_{50}}$ is half the specimen height at the appropriate increment and for one-sided drainage $H_{D_{50}}$ is the full specimen height.

12.4 *Load-Deformation Properties:*

12.4.1 Tabulate the deformation or change in deformation, d_f, readings corresponding to the end of each increment and, if using Test Method B, corresponding to the end-of-primary consolidation, d_{100}.

12.4.2 Calculate the change in height, $\Delta H = d - d_o$, relative to the initial specimen height for each reading. If necessary, correct the deformation for the apparatus flexibility by subtracting the calibration value obtained in Section 9 from each reading.

12.4.3 Represent the deformation results in one of the following formats.

12.4.3.1 Calculate the void ratio as follows:

$$e = e_o - \frac{\Delta H}{H_s}$$

12.4.3.2 Alternatively, calculate the vertical strain, in percent, as follows:

$$\epsilon = \frac{\Delta H}{H_0} \times 100$$

12.4.4 Calculate the vertical stress as follows:

$$\sigma_v = \frac{P}{A}$$

where:

P = applied load in N
σ_v = vertical stress in kPa.

12.4.5 Referring to Fig. 4, plot the deformation results (void ratio or strain) corresponding to the end of each increment and, if using Test Method B, corresponding to the end-of-primary consolidation versus the logarithm of the pressure.

NOTE 14—In some cases, it may be preferable to present the load-deformation curve in arithmetic scale.

12.4.6 Referring to Fig. 4, determine the value of the preconsolidation pressure using the following procedure.

NOTE 15—Any other recognized method of estimating preconsolidation pressure (see references) may also be used, provided the method is identified in the report.

12.4.6.1 Estimate the point of maximum curvature on the consolidation curve (B).

12.4.6.2 Draw the tangent to the consolidation curve at this point (C), and a horizontal line through the point (D), both extended towards increasing values on the abscissa.

12.4.6.3 Draw the line bisecting the angle between these lines (E).

12.4.6.4 Extend the tangent to the steep, linear portion of the consolidation curve (virgin compression branch) (F) upwards to intersection with the bisector line (E). The

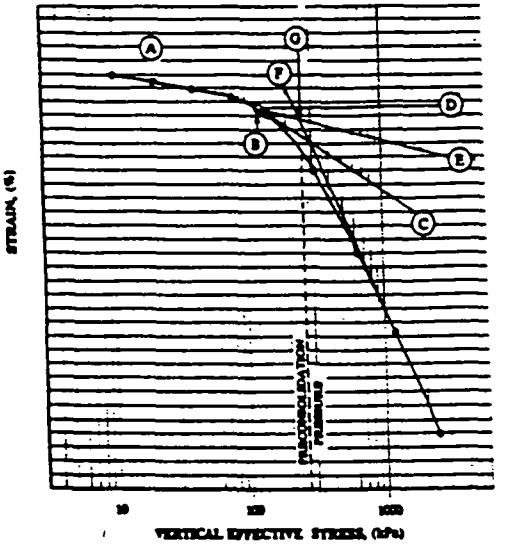

A STRESS STRAIN CURVE FROM DATA POINTS
B POINT OF MAXIMUM CURVATURE
C TANGENT LINE TO CURVE AT POINT B
D HORIZONTAL LINE THROUGH POINT B
E LINE BISECTING ANGLE BETWEEN LINES C AND D
F TANGENT TO LINEAR PORTION OF CURVE IN VIRGIN COMPRESSION RANGE
G INTERSECTION OF LINES E AND F (VERTICAL EFFECTIVE STRESS AT POINT G EQUALS THE PRECONSOLIDATION PRESSURE)

FIG. 4 Evaluation for Preconsolidation Pressure From Casagrande Method

ressure (G) (abscissa) corresponding to this point of intersection is the estimated preconsolidation pressure.

12.4.7 Complete evaluation often includes consideration of information not generally available to the laboratory performing the test. For this reason further evaluation of the test is not mandatory. Many recognized methods of evaluation are described in the literature. Some of these are discussed in the Refs. (1) through (8).

13. Report

13.1 In addition to project name and location, boring number, sample number, and depth, report the following information.

13.1.1 Description and classification of the soil in accordance with Practice D 2488 or Test Method D 2487 when Atterberg limit data are available. Specific gravity of solids, Atterberg limits and grain size distribution shall also be reported when available plus the source of such information if other than measurements obtained on test specimen. Also note occurrence and approximate size of isolated large particles.

13.1.2 *Soil Condition:*

13.1.2.1 Average water content of trimmings,

13.1.2.2 Initial and final water content of specimen,

13.1.2.3 Initial and final dry unit weight of specimen,

13.1.2.4 Initial and final void ratio of specimen,

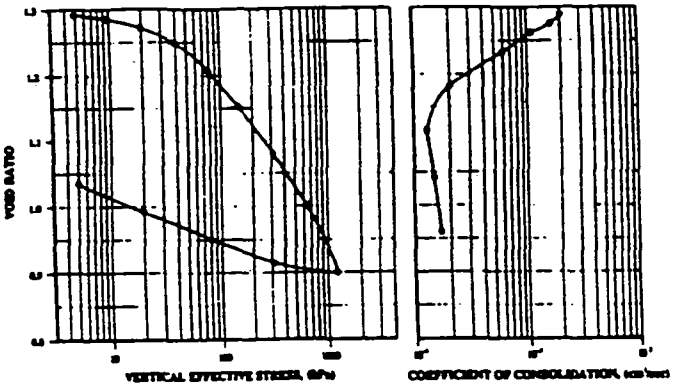

FIG. 5 Example of Consolidation Test Summary Plots

13.1.2.5 Initial and final degree of saturation of specimen, and

13.1.2.6 Preconsolidation pressure.

13.1.3 *Test Procedure:*

13.1.3.1 Preparation procedure used relative to trimming; state whether the specimen was trimmed using a trimming turntable, trimmed using a cutting shoe, or tested directly in a ring from a ring lined sampler.

13.1.3.2 Condition of test (natural moisture or inundated, pressure at inundation).

13.1.3.3 Method of testing (A or B).

13.1.3.4 Test Method used to compute coefficient of consolidation.

13.1.3.5 Listing of loading increments and decrements, and load increment duration, if differing from 24 h; end of increment deformation results and, for Test Method B, end-of-primary deformation results and coefficient of consolidation (see Fig. 1).

13.1.3.6 All departures from the procedure outlined, including special loading sequences.

13.1.4 *Graphical Presentations:*

13.1.4.1 Graph of deformation versus log time (see Fig. 2) or square root of time (see Fig. 3) for those load increments where time rate readings were taken.

13.1.4.2 Graph of void ratio versus log of pressure curve or percent compression versus log of pressure curve (see Fig. 4).

13.1.4.3 In cases where time rate of deformation readings have been taken for several load increments, prepare a graph of the log of coefficient of consolidation versus average void ratio or average percent compression for the respective load increments (see Fig. 5). Alternatively, a graph of coefficient of consolidation or log of coefficient of consolidation versus log of average pressure may be used. If time rate readings were obtained for only two load increments, simply tabulate the values of c_v versus the average pressure for the increment.

NOTE 16—The average pressure between two load increments is chosen because it is a convenient coordinate for plotting the result. Unless the rate of pore pressure dissipation is measured, it is not possible to determine the actual effective pressure at the time of 50 % consolidation. Furthermore, some ambiguity may arise in cases where the test has been carried through one or more intermediate load-rebound cycles.

14. Precision and Bias

14.1 *Statement of Precision*—Due to the nature of the soil materials tested by this test method it is either not feasible or too costly at this time to produce multiple specimens which have uniform physical properties. Any variation observed in the data is just as likely to be due to specimen variation as to operator or laboratory testing variation. Subcommittee D18.05 welcomes proposals that would allow for development of a valid precision statement.

14.2 *Statement of Bias*—There is no acceptable reference value for this test method, therefore, bias cannot be determined.

15. Keywords

15.1 Compressibility; compression curves; consolidation; consolidation coefficient; consolidation test; consolidometer; preconsolidation pressure; primary consolidation; rebound; secondary compression; settlement; swelling.

REFERENCES

(1) Casagrande, A., "The Determination of the Pre-Consolidation Load and its Practical Significance," Proceedings 1st ICSMFE, III. 1936, p. 60.

(2) Taylor, D. W., *Fundamentals of Soil Mechanics*, John Wiley and Sons, New York, NY, 1948.

(3) Burmeister, D. M. "The Application of Controlled Test Methods in Consolidation Testing." ASTM STP 126, p. 83, ASTM 1951.

(4) Schmertmann, J. H. "The Undisturbed Consolidation Behavior of Clay" Trans. ASCE, 120, pp. 1201 through 1233, 1955.

(5) Leonards, G. A. "Engineering Properties of Soils," Chapter 2 in *Foundation Engineering* by Leonards, G. A., ed. McGraw-Hill, New York, NY, 1962.

(6) Winterkorn, H. F. and Fang, H. Y. eds. *Foundation Engineering Handbook*, Chapter 4, Von Nostrand Reinhold Co, New York, NY, 1975.

(7) Holtz, R. D. and Kovacs, W. D. *An Introduction to Geotechnical Engineering*, Prentice Hall, Englewood Cliffs, NJ, 1981.

(8) Yong, R. N. and Townsend, F. C. Eds. "Consolidation of Soils: Testing and Evaluation," *ASTM STP 892*, ASTM, 1986.

Standard
Classification of Soils for Engineering Purposes (Unified Soil Classification System)[1]

This standard is issued under the fixed designation D 2487; the number immediately following the designation indicates the year of original adoption or, in the case of revision, the year of last revision. A number in parentheses indicates the year of last reapproval. A superscript epsilon (ε) indicates an editorial change since the last revision or reapproval.

This standard has been approved for use by agencies of the Department of Defense. Consult the DOD Index of Specifications and Standards for the specific year of issue which has been adopted by the Department of Defense.

standard describes a system for classifying min-
;ano-mineral soils for engineering purposes based
›ry determination of particle-size characteristics,
.. and plasticity index and shall be used when
sification is required.

Use of this standard will result in a single classification
. and group name except when a soil contains 5 to 12 %
the plot of the liquid limit and plasticity index values falls
hatched area of the plasticity chart. In these two cases, a
s used, for example, GP-GM, CL-ML. When the labora-
ts indicate that the soil is close to another soil classification
orderline condition can be indicated with two symbols
a slash. The first symbol should be the one based on this
example, CL/CH, GM/SM, SC/CL. Borderline symbols
ly useful when the liquid limit value of clayey soils is close
soils can have expansive characteristics and the use of a
mbol (CL/CH, CH/CL) will alert the user of the assigned
of expansive potential.

group symbol portion of this sytem is based on
tests performed on the portion of a soil sample
3-in. (75-mm) sieve (see Specification E 11).
classification system, this standard is limited to
ccurring soils.

The group names and symbols used in this test method
as a descriptive system applied to such materials as shale,
lls, crushed rock, etc. See Appendix X2.

standard is for qualitative application only.

When quantitative information is required for detailed
portant structures, this test method must be supplemented
tests or other quantitative data to determine performance
s under expected field conditions.

standard is the ASTM version of the Unified Soil
on System. The basis for the classification scheme
field Classification System developed by A.
in the early 1940's.[2] It became known as the
il Classification System when several U.S. Gov-
gencies adopted a modified version of the Airfield
1952.

standard does not purport to address all of the safety problems, if any, associated with its use. It is the responsibility of the user of this standard to establish appropriate safety and health practices and determine the applicability of regulatory limitations prior to use.

2. Referenced Documents

2.1 *ASTM Standards:*

C 117 Test Method for Materials Finer Than 75-µm (No. 200) Sieve in Mineral Aggregates by Washing[3]

C 136 Method for Sieve Analysis of Fine and Coarse Aggregates[3]

C 702 Practice for Reducing Field Samples of Aggregate to Testing Size[3]

D 420 Guide for Investigating and Sampling Soil and Rock[4]

D 421 Practice for Dry Preparation of Soil Samples for Particle-Size Analysis and Determination of Soil Constants[4]

D 422 Test Method for Particle-Size Analysis of Soils[4]

D 653 Terminology Relating to Soil, Rock, and Contained Fluids[4]

D 1140 Test Method for Amount of Material in Soils Finer than the No. 200 (75-µm) Sieve[4]

D 2216 Test Method for Laboratory Determination of Water (Moisture) Content of Soil and Rock[4]

D 2217 Practice for Wet Preparation of Soil Samples for Particle-Size Analysis and Determination of Soil Constants[4]

D 2488 Practice for Description and Identification of Soils (Visual-Manual Procedure)[4]

D 4083 Practice for Description of Frozen Soils (Visual-Manual Procedure)[4]

D 4318 Test Method for Liquid Limit, Plastic Limit, and Plasticity Index of Soils[4]

D 4427 Classification of Peat Samples by Laboratory Testing[4]

E 11 Specification for Wire-Cloth Sieves for Testing Purposes[3]

3. Terminology

3.1 *Definitions*—Except as listed below, all definitions are in accordance with Terminology D 653.

---

ard is under the jurisdiction of ASTM Committee D-18 on Soil and
ie direct responsibility of Subcommittee D18.07 on Identification
on of Soils.

tion approved May 15, 1992. Published July 1992. Originally
2487 – 66 T. Last previous edition D 2487 – 90[ε1].

e, A., "Classification and Identification of Soils," *Transactions*,
. 901.

[3] *Annual Book of ASTM Standards*, Vol 04.02.

[4] *Annual Book of ASTM Standards*, Vol 04.08.

NOTE 4—For particles retained on a 3-in. (75-mm) U.S. standard sieve, the following definitions are suggested:

Cobbles—particles of rock that will pass a 12-in. (300-mm) square opening and be retained on a 3-in. (75-mm) U.S. standard sieve, and

Boulders—particles of rock that will not pass a 12in. (300-mm) square opening

3.1.1 *gravel*—particles of rock that will pass a 3-in. (75-mm) sieve and be retained on a No. 4 (4.75-mm) U.S. standard sieve with the following subdivisions:

Coarse—passes 3-in. (75-mm) sieve and retained on ¾-in. (19-mm) sieve, and

Fine—passes ¾-in. (19-mm) sieve and retained on No. 4 (4.75-mm) sieve.

3.1.2 *sand*—particles of rock that will pass a No. 4 (4.75-mm) sieve and be retained on a No. 200 (75-µm) U.S. standard sieve with the following subdivisions:

Coarse—passes No. 4 (4.75-mm) sieve and retained on No. 10 (2.00-mm) sieve,

Medium—passes No. 10 (2.00-mm) sieve and retained on No. 40 (425-µm) sieve, and

Fine—passes No. 40 (425-µm) sieve and retained on No. 200 (75-µm) sieve.

3.1.3 *clay*—soil passing a No. 200 (75-µm) U.S. standard sieve that can be made to exhibit plasticity (putty-like properties) within a range of water contents and that exhibits considerable strength when air dry. For classification, a clay is a fine-grained soil, or the fine-grained portion of a soil, with a plasticity index equal to or greater than 4, and the plot of plasticity index versus liquid limit falls on or above the "A" line.

3.1.4 *silt*—soil passing a No. 200 (75-µm) U.S. standard sieve that is nonplastic or very slightly plastic and that exhibits little or no strength when air dry. For classification, a silt is a fine-grained soil, or the fine-grained portion of a soil, with a plasticity index less than 4 or if the plot of plasticity index versus liquid limit falls below the "A" line.

3.1.5 *organic clay*—a clay with sufficient organic content to influence the soil properties. For classification, an organic clay is a soil that would be classified as a clay except that its liquid limit value after oven drying is less than 75 % of its liquid limit value before oven drying.

3.1.6 *organic silt*—a silt with sufficient organic content to influence the soil properties. For classification, an organic silt is a soil that would be classified as a silt except that its liquid limit value after oven drying is less than 75 % of its liquid limit value before oven drying.

3.1.7 *peat*—a soil composed of vegetable tissue in various stages of decomposition usually with an organic odor, a dark-brown to black color, a spongy consistency, and a texture ranging from fibrous to amorphous.

3.2 *Descriptions of Terms Specific to This Standard:*

3.2.1 *coefficient of curvature*, Cc—the ratio $(D_{30})^2/(D_{10} \times D_{60})$, where D_{60}, D_{30}, and D_{10} are the particle diameters corresponding to 60, 30, and 10 % finer on the cumulative particle-size distribution curve, respectively.

3.2.2 *coefficient of uniformity*, Cu—the ratio D_{60}/D_{10}, where D_{60} and D_{10} are the particle diameters corresponding to 60 and 10 % finer on the cumulative particle-size distribution curve, respectively.

4. Summary

4.1 As illustrated in Table 1, this classification system identifies three major soil divisions: coarse-grained soils, fine-grained soils, and highly organic soils. These three divisions are further subdivided into a total of 15 basic soil groups.

4.2 Based on the results of visual observations and prescribed laboratory tests, a soil is catalogued according to the basic soil groups, assigned a group symbol(s) and name, and thereby classified. The flow charts, Fig. 1 for fine-grained soils, and Fig. 2 for coarse-grained soils, can be used to assign the appropriate group symbol(s) and name.

5. Significance and Use

5.1 This standard classifies soils from any geographic location into categories representing the results of prescribed laboratory tests to determine the particle-size characteristics, the liquid limit, and the plasticity index.

5.2 The assigning of a group name and symbol(s) along with the descriptive information required in Practice D 2488 can be used to describe a soil to aid in the evaluation of its significant properties for engineering use.

5.3 The various groupings of this classification system have been devised to correlate in a general way with the engineering behavior of soils. This standard provides a useful first step in any field or laboratory investigation for geotechnical engineering purposes.

5.4 This standard may also be used as an aid in training personnel in the use of Practice D 2488.

5.5 This standard may be used in combination with Practice D 4083 when working with frozen soils.

6. Apparatus

6.1 In addition to the apparatus that may be required for obtaining and preparing the samples and conducting the prescribed laboratory tests, a plasticity chart, similar to Fig. 3, and a cumulative particle-size distribution curve, similar to Fig. 4, are required.

NOTE 5—The "U" line shown on Fig. 3 has been empirically determined to be the approximate "upper limit" for natural soils. It is a good check against erroneous data, and any test results that plot above or to the left of it should be verified.

7. Sampling

7.1 Samples shall be obtained and identified in accordance with a method or methods, recommended in Recommended Guide D 420 or by other accepted procedures.

7.2 For accurate identification, the minimum amount of test sample required for this test method will depend on which of the laboratory tests need to be performed. Where only the particle-size analysis of the sample is required, specimens having the following minimum dry weights are required:

Maximum Particle Size, Sieve Opening	Minimum Specimen Size, Dry Weight
4.75 mm (No. 4)	100 g (0.25 lb)
9.5 mm (⅜ in.)	200 g (0.5 lb)
19.0 mm (¾ in.)	1.0 kg (2.2 lb)
38.1 mm (1½ in.)	8.0 kg (18 lb)
75.0 mm (3 in.)	60.0 kg (132 lb)

Whenever possible, the field samples should have weights two to four times larger than shown.

TABLE 1 Soil Classification Chart

Criteria for Assigning Group Symbols and Group Names Using Laboratory Tests[A]				Soil Classification	
				Group Symbol	Group Name[B]
COARSE-GRAINED SOILS More than 50 % retained on No. 200 sieve	Gravels More than 50 % of coarse fraction retained on No. 4 sieve	Clean Gravels Less than 5 % fines[C]	Cu ≥ 4 and 1 ≤ Cc ≤ 3[E]	GW	Well-graded gravel[F]
			Cu < 4 and/or 1 > Cc > 3[E]	GP	Poorly graded gravel[F]
		Gravels with Fines More than 12 % fines[C]	Fines classify as ML or MH	GM	Silty gravel[F,G,H]
			Fines classify as CL or CH	GC	Clayey gravel[F,G,H]
	Sands 50 % or more of coarse fraction passes No. 4 sieve	Clean Sands Less than 5 % fines[D]	Cu ≥ 6 and 1 ≤ Cc ≤ 3[E]	SW	Well-graded sand[I]
			Cu < 6 and/or 1 > Cc > 3[E]	SP	Poorly graded sand[I]
		Sands with Fines More than 12 % fines[D]	Fines classify as ML or MH	SM	Silty sand[G,H,I]
			Fines classify as CL or CH	SC	Clayey sand[G,H,I]
FINE-GRAINED SOILS 50 % or more passes the No. 200 sieve	Silts and Clays Liquid limit less than 50	inorganic	PI > 7 and plots on or above "A" line[J]	CL	Lean clay[K,L,M]
			PI < 4 or plots below "A" line[J]	ML	Silt[K,L,M]
		organic	$\frac{\text{Liquid limit – oven dried}}{\text{Liquid limit – not dried}} < 0.75$	OL	Organic clay[K,L,M,N] / Organic silt[K,L,M,O]
	Silts and Clays Liquid limit 50 or more	inorganic	PI plots on or above "A" line	CH	Fat clay[K,L,M]
			PI plots below "A" line	MH	Elastic silt[K,L,M]
		organic	$\frac{\text{Liquid limit – oven dried}}{\text{Liquid limit – not dried}} < 0.75$	OH	Organic clay[K,L,M,P] / Organic silt[K,L,M,Q]
HIGHLY ORGANIC SOILS	Primarily organic matter, dark in color, and organic odor			PT	Peat

[A] Based on the material passing the 3-in. (75-mm) sieve.

[B] If field sample contained cobbles or boulders, or both, add "with cobbles or boulders, or both" to group name.

[C] Gravels with 5 to 12 % fines require dual symbols:
GW-GM well-graded gravel with silt
GW-GC well-graded gravel with clay
GP-GM poorly graded gravel with silt
GP-GC poorly graded gravel with clay

[D] Sands with 5 to 12 % fines require dual symbols:
SW-SM well-graded sand with silt
SW-SC well-graded sand with clay
SP-SM poorly graded sand with silt
SP-SC poorly graded sand with clay

[E] $Cu = D_{60}/D_{10}$ $\quad Cc = \frac{(D_{30})^2}{D_{10} \times D_{60}}$

[F] If soil contains ≥ 15 % sand, add "with sand" to group name.

[G] If fines classify as CL-ML, use dual symbol GC-GM, or SC-SM.

[H] If fines are organic, add "with organic fines" to group name.

[I] If soil contains ≥ 15 % gravel, add "with gravel" to group name.

[J] If Atterberg limits plot in hatched area, soil is a CL-ML, silty clay.

[K] If soil contains 15 to 29 % plus No. 200, add "with sand" or "with gravel," whichever is predominant.

[L] If soil contains ≥ 30 % plus No. 200, predominantly sand, add "sandy" to group name.

[M] If soil contains ≥ 30 % plus No. 200, predominantly gravel, add "gravelly" to group name.

[N] PI ≥ 4 and plots on or above "A" line.

[O] PI < 4 or plots below "A" line.

[P] PI plots on or above "A" line.

[Q] PI plots below "A" line.

7.3 When the liquid and plastic limit tests must also be performed, additional material will be required sufficient to provide 150 g to 200 g of soil finer than the No. 40 (425-µm) sieve.

7.4 If the field sample or test specimen is smaller than the minimum recommended amount, the report shall include an appropriate remark.

8. Classification of Peat

8.1 A sample composed primarily of vegetable tissue in various stages of decomposition and has a fibrous to amorphous texture, a dark-brown to black color, and an organic odor should be designated as a highly organic soil and shall be classified as peat, PT, and not subjected to the classification procedures described hereafter.

8.2 If desired, classification of type of peat can be performed in accordance with Classification D 4427.

9. Preparation for Classification

9.1 Before a soil can be classified according to this standard, generally the particle-size distribution of the minus 3-in. (75-mm) material and the plasticity characteristics of the minus No. 40 (425-µm) sieve material must be determined. See 9.8 for the specific required tests.

9.2 The preparation of the soil specimen(s) and the testing for particle-size distribution and liquid limit and plasticity index shall be in accordance with accepted standard procedures. Two procedures for preparation of the soil specimens for testing for soil classification purposes are given in Appendixes X3 and X4. Appendix X3 describes the wet preparation method and is the preferred method for cohesive soils that have never dried out and for organic soils.

9.3 When reporting soil classifications determined by this standard, the preparation and test procedures used shall be reported or referenced.

9.4 Although the test procedure used in determining the particle-size distribution or other considerations may require a hydrometer analysis of the material, a hydrometer analysis is not necessary for soil classification.

9.5 The percentage (by dry weight) of any plus 3-in. (75-mm) material must be determined and reported as auxiliary information.

9.6 The maximum particle size shall be determined (measured or estimated) and reported as auxiliary information.

9.7 When the cumulative particle-size distribution is required, a set of sieves shall be used which include the

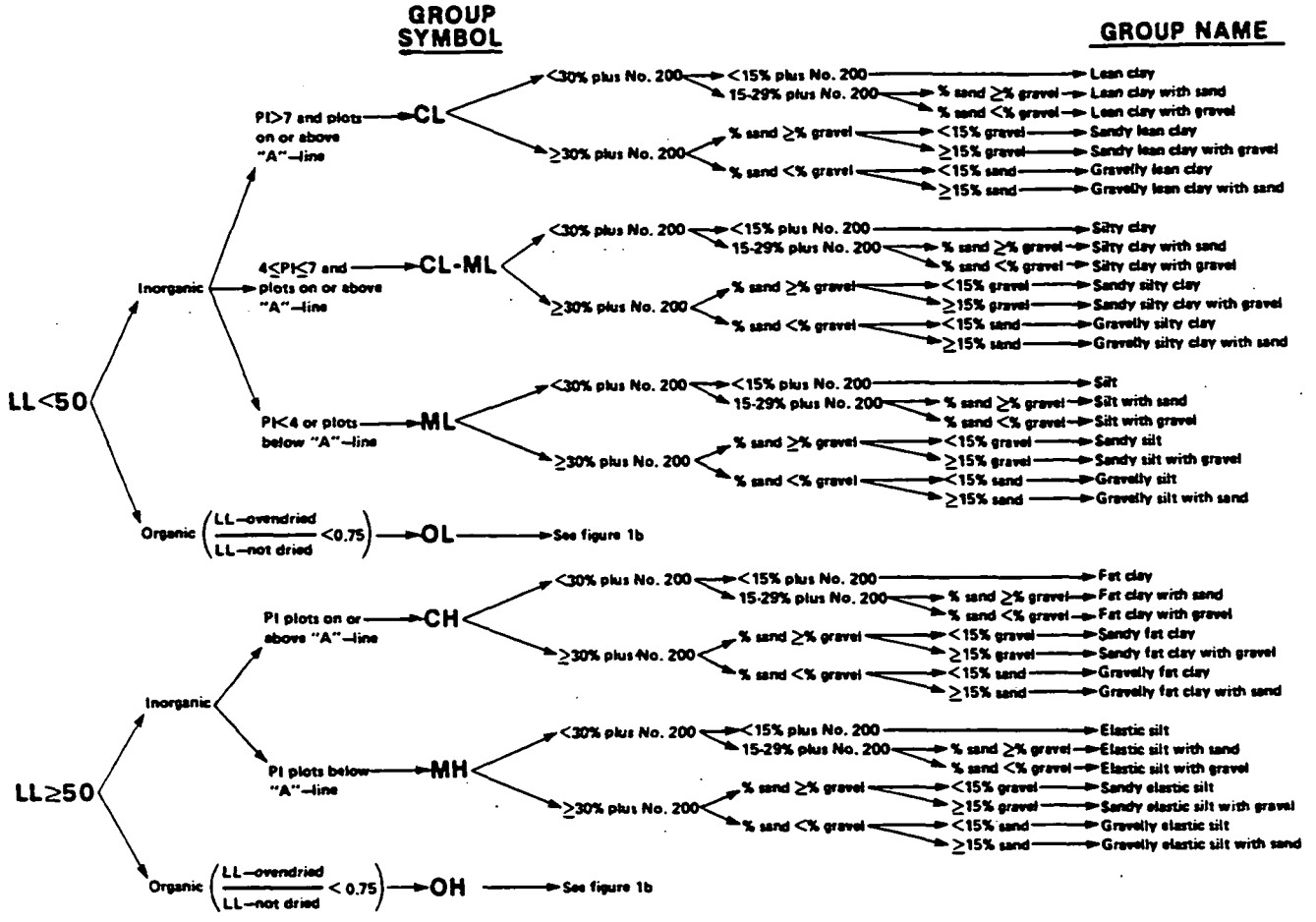

FIG. 1a Flow Chart for Classifying Fine-Grained Soil (50 % or More Passes No. 200 Sieve)

following sizes (with the largest size commensurate with the maximum particle size) with other sieve sizes as needed or required to define the particle-size distribution:

3-in. (75-mm)
¾-in.(19.0-mm)
No. 4 (4.75-mm)
No. 10 (2.00-mm)
No. 40 (425-µm)
No. 200 (75-µm)

9.8 The tests required to be performed in preparation for classification are as follows:

9.8.1 For soils estimated to contain less than 5 % fines, a plot of the cumulative particle-size distribution curve of the fraction coarser than the No. 200 (75-µm) sieve is required. The cumulative particle-size distribution curve may be plotted on a graph similar to that shown in Fig. 4.

9.8.2 For soils estimated to contain 5 to 15 % fines, a cumulative particle-size distribution curve, as described in 9.8.1, is required, and the liquid limit and plasticity index are required.

9.8.2.1 If sufficient material is not available to determine the liquid limit and plasticity index, the fines should be estimated to be either silty or clayey using the procedures described in Practice D 2488 and so noted in the report.

9.8.3 For soils estimated to contain 15 % or more fines, a determination of the percent fines, percent sand, and percent gravel is required, and the liquid limit and plasticity index are required. For soils estimated to contain 90 % fines c more, the percent fines, percent sand, and percent grav may be estimated using the procedures described in Practic D 2488 and so noted in the report.

10. Preliminary Classification Procedure

10.1 Class the soil as fine-grained if 50 % or more by d weight of the test specimen passes the No. 200 (75-µm) sie and follow Section 11.

10.2 Class the soil as coarse-grained if more than 50 % l dry weight of the test specimen is retained on the No. 2((75-µm) sieve and follow Section 12.

11. Procedure for Classification of Fine-Grained Soils (50 or more by dry weight passing the No. 200 (75-µı sieve)

11.1 The soil is an inorganic clay if the position of t plasticity index versus liquid limit plot, Fig. 3, falls on above the "A" line, the plasticity index is greater than 4, a the presence of organic matter does not influence the liqu limit as determined in 11.3.2.

NOTE 6—The plasticity index and liquid limit are determined on minus No. 40 (425 µm) sieve material.

11.1.1 Classify the soil as a *lean clay*, CL, if the liqu limit is less than 50. See area identified as CL on Fig. 3.

11.1.2 Classify the soil as a *fat clay*, CH, if the liquid lir

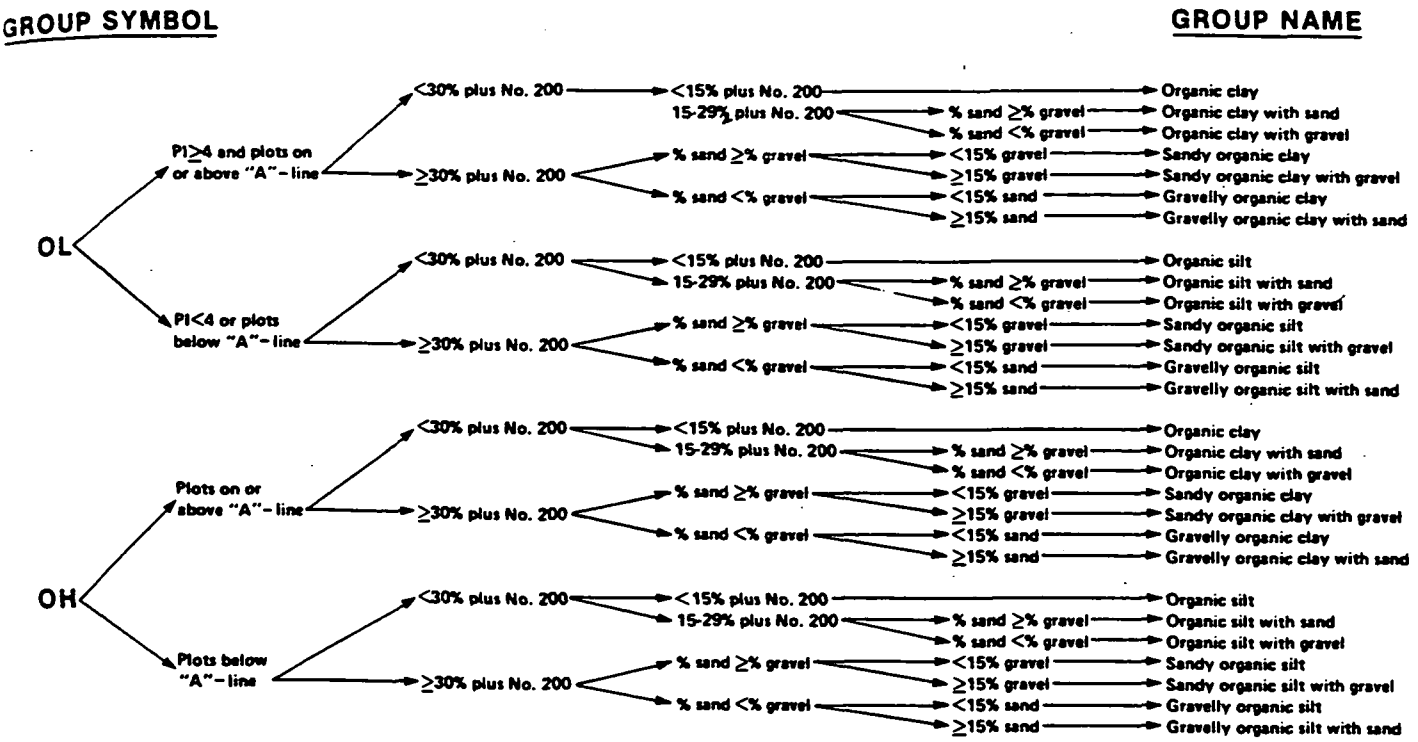

FIG. 1b Flow Chart for Classifying Organic Fine-Grained Soil (50 % or More Passes No. 200 Sieve)

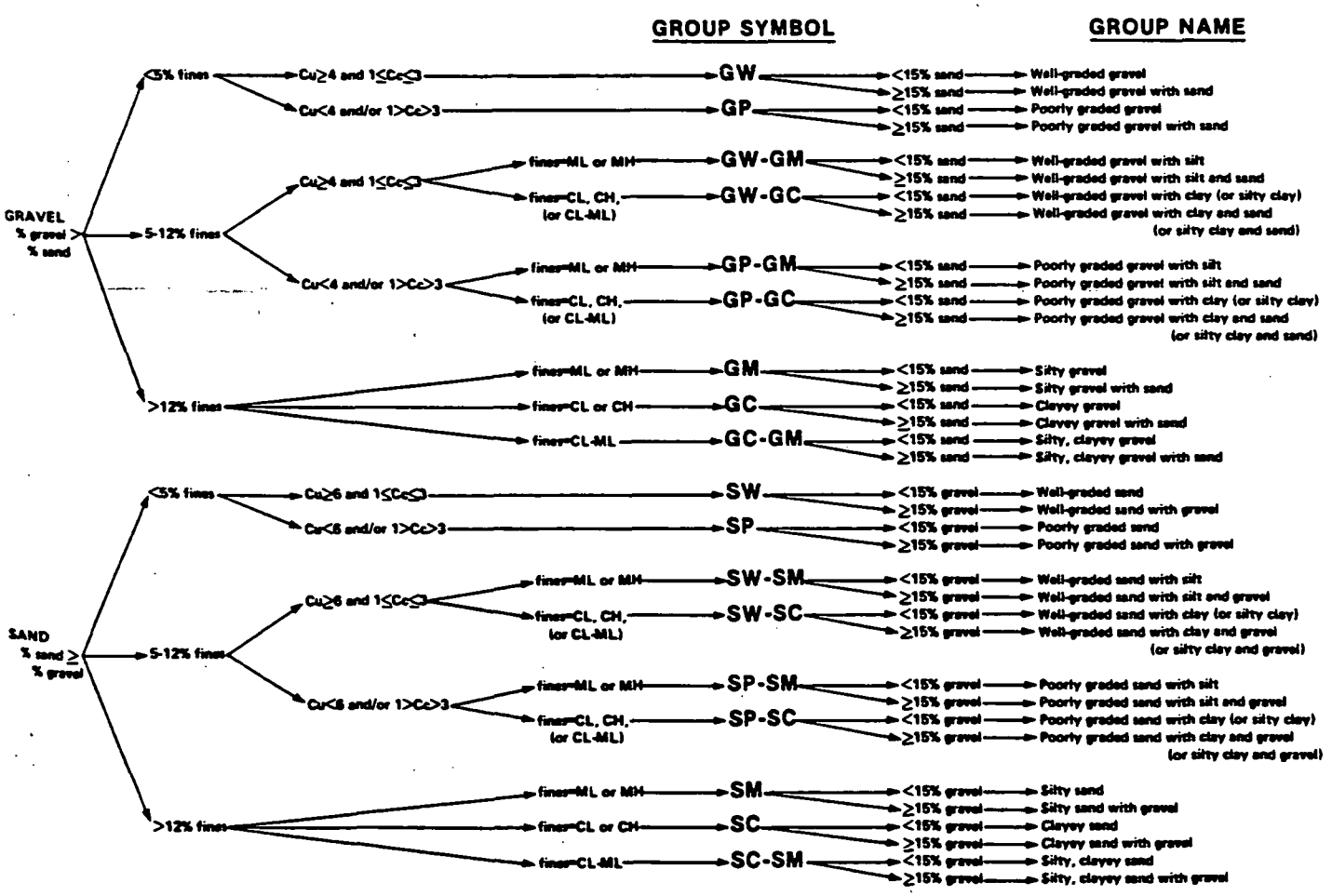

FIG. 2 Flow Chart for Classifying Coarse-Grained Soils (More Than 50 % Retained on No. 200 Sieve)

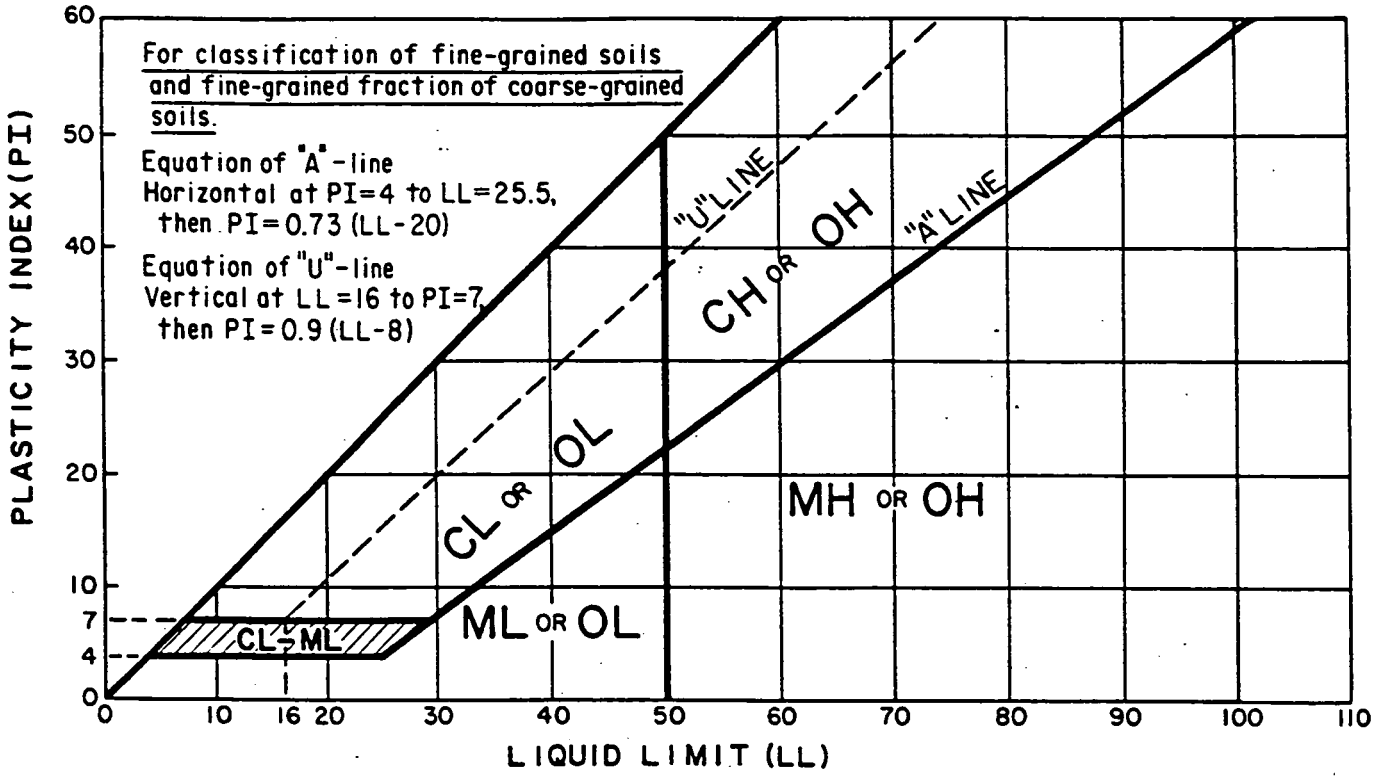

FIG. 3 Plasticity Chart

is 50 or greater. See area identified as CH on Fig. 3.

NOTE 7—In cases where the liquid limit exceeds 110 or the plasticity index exceeds 60, the plasticity chart may be expanded by maintaining the same scale on both axes and extending the "A" line at the indicated slope.

11.1.3 Classify the soil as a *silty clay*, CL-ML, if the position of the plasticity index versus liquid limit plot falls on or above the "A" line and the plasticity index is in the range of 4 to 7. See area identified as CL-ML on Fig. 3.

11.2 The soil is an inorganic silt if the position of the plasticity index versus liquid limit plot, Fig. 3, falls below the "A" line or the plasticity index is less than 4, and presence of organic matter does not influence the liquid limit as determined in 11.3.2.

11.2.1 Classify the soil as a *silt*, ML, if the liquid limit is less than 50. See area identified as ML on Fig. 3.

11.2.2 Classify the soil as an *elastic silt*, MH, if the liquid limit is 50 or greater. See area identified as MH on Fig. 3.

11.3 The soil is an organic silt or clay if organic matter is present in sufficient amounts to influence the liquid limit as determined in 11.3.2.

11.3.1 If the soil has a dark color and an organic odor when moist and warm, a second liquid limit test shall be performed on a test specimen which has been oven dried at 110 ± 5°C to a constant weight, typically over night.

11.3.2 The soil is an organic silt or organic clay if the liquid limit after oven drying is less than 75 % of the liquid limit of the original specimen determined before oven drying (see Procedure B of Practice D 2217).

11.3.3 Classify the soil as an *organic silt* or *organic clay*, OL, if the liquid limit (not oven dried) is less than 50 %. Classify the soil as an *organic silt*, OL, if the plasticity index is less than 4, or the position of the plasticity index versus liquid limit plot falls below the "A" line. Classify the soil as an *organic clay*, OL, if the plasticity index is 4 or greater and the position of the plasticity index versus liquid limit plot falls on or above the "A" line. See area identified as OL (or CL-ML) on Fig. 3.

11.3.4 Classify the soil as an *organic clay* or *organic silt*, OH, if the liquid limit (not oven dried) is 50 or greater. Classify the soil as an *organic silt*, OH, if the position of the plasticity index versus liquid limit plot falls below the "A" line. Classify the soil as an *organic clay*, OH, if the position of the plasticity index versus liquid-limit plot falls on or above the "A" line. See area identified as OH on Fig. 3.

11.4 If less than 30 % but 15 % or more of the test specimen is retained on the No. 200 (75-µm) sieve, the words "with sand" or "with gravel" (whichever is predominant) shall be added to the group name. For example, lean clay with sand, CL; silt with gravel, ML. If the percent of sand is equal to the percent of gravel, use "with sand."

11.5 If 30 % or more of the test specimen is retained on the No. 200 (75-µm) sieve, the words "sandy" or "gravelly" shall be added to the group name. Add the word "sandy" if 30 % or more of the test specimen is retained on the No. 200 (75-µm) sieve and the coarse-grained portion is predominantly sand. Add the word "gravelly" if 30 % or more of the test specimen is retained on the No. 200 (75-µm) sieve and the coarse-grained portion is predominantly gravel. For example, sandy lean clay, CL; gravelly fat clay, CH; sandy silt, ML. If the percent of sand is equal to the percent of gravel, use "sandy."

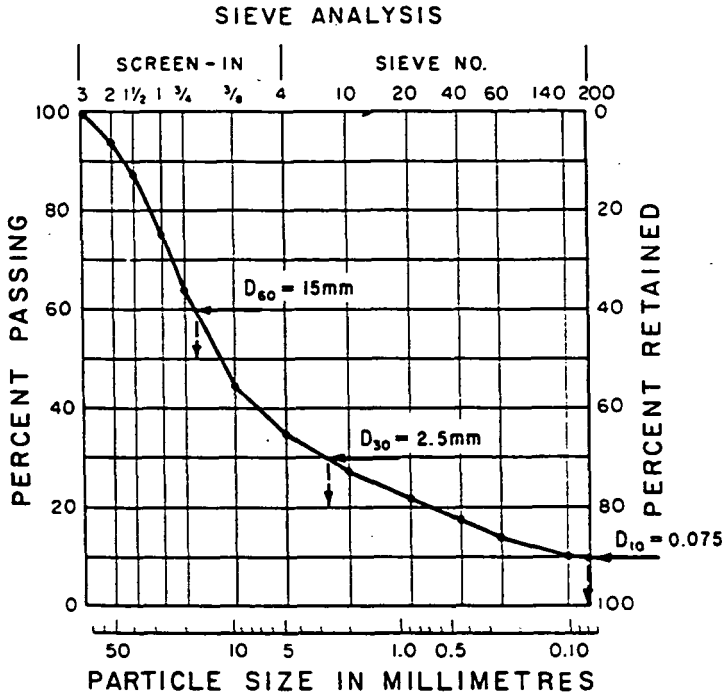

$$Cu = \frac{D_{60}}{D_{10}} = \frac{15}{0.075} = 200 \qquad Cc = \frac{(D_{30})^2}{D_{10} \times D_{60}} = \frac{(2.5)^2}{0.075 \times 15} = 5.6$$

FIG. 4 Cumulative Particle-Size Plot

12. Procedure for Classification of Coarse-Grained Soils (more than 50 % retained on the No. 200 (75-µm) sieve)

12.1 Class the soil as gravel if more than 50 % of the coarse fraction [plus No. 200 (75-µm) sieve] is retained on the No. 4 (4.75-mm) sieve.

12.2 Class the soil as sand if 50 % or more of the coarse fraction [plus No. 200 (75-µm) sieve] passes the No. 4 (4.75-mm) sieve.

12.3 If 12 % or less of the test specimen passes the No. 200 (75-µm) sieve, plot the cumulative particle-size distribution, Fig. 4, and compute the coefficient of uniformity, Cu, and coefficient of curvature, Cc, as given in Eqs 1 and 2.

$$Cu = D_{60}/D_{10} \quad (1)$$

$$Cc = (D_{30})^2/(D_{10} \times D_{60}) \quad (2)$$

where:

D_{10}, D_{30}, and D_{60} = the particle-size diameters corresponding to 10, 30, and 60 %, respectively, passing on the cumulative particle-size distribution curve, Fig. 4.

NOTE 8—It may be necessary to extrapolate the curve to obtain the D_{10} diameter.

12.3.1 If less than 5 % of the test specimen passes the No. 200 (75-µm) sieve, classify the soil as a *well-graded gravel*, GW, or *well-graded sand*, SW, if Cu is greater than 4.0 for gravel or greater than 6.0 for sand, and Cc is at least 1.0 but not more than 3.0.

12.3.2 If less than 5 % of the test specimen passes the No. 200 (75-µm) sieve, classify the soil as *poorly graded gravel*, GP, or *poorly graded sand*, SP, if either the Cu or the Cc criteria for well-graded soils are not satisfied.

12.4 If more than 12 % of the test specimen passes the No. 200 (75-µm) sieve, the soil shall be considered a coarse-grained soil with fines. The fines are determined to be either clayey or silty based on the plasticity index versus liquid limit plot on Fig. 3. (See 9.8.2.1 if insufficient material available for testing). (See NOTE 6)

12.4.1 Classify the soil as a *clayey gravel*, GC, or *clayey sand*, SC, if the fines are clayey, that is, the position of the plasticity index versus liquid limit plot, Fig. 3, falls on or above the "A" line and the plasticity index is greater than 7.

12.4.2 Classify the soil as a *silty gravel*, GM, or *silty sand*, SM, if the fines are silty, that is, the position of the plasticity index versus liquid limit plot, Fig. 3, falls below the "A" line or the plasticity index is less than 4.

12.4.3 If the fines plot as a silty clay, CL-ML, classify the soil as a *silty, clayey gravel*, GC-GM, if it is a gravel or a *silty, clayey sand*, SC-SM, if it is a sand.

12.5 If 5 to 12 % of the test specimen passes the No. 200 (75-µm) sieve, give the soil a dual classification using two group symbols.

12.5.1 The first group symbol shall correspond to that for a gravel or sand having less than 5 % fines (GW, GP, SW, SP), and the second symbol shall correspond to a gravel or sand having more than 12 % fines (GC, GM, SC, SM).

12.5.2 The group name shall correspond to the first group symbol plus "with clay" or "with silt" to indicate the plasticity characteristics of the fines. For example, well-graded gravel with clay, GW-GC; poorly graded sand with silt, SP-SM (See 9.8.2.1 if insufficient material available for testing).

NOTE 9—If the fines plot as a *silty clay*, CL-ML, the second group symbol should be either GC or SC. For example, a poorly graded sand with 10 % fines, a liquid limit of 20, and a plasticity index of 6 would be classified as a poorly graded sand with silty clay, SP-SC.

000301

12.6 If the specimen is predominantly sand or gravel but contains 15 % or more of the other coarse-grained constituent, the words "with gravel" or "with sand" shall be added to the group name. For example, poorly graded gravel with sand, clayey sand with gravel.

12.7 If the field sample contained any cobbles or boulders or both, the words "with cobbles," or "with cobbles and boulders" shall be added to the group name. For example, silty gravel with cobbles, GM.

13. Report

13.1 The report should include the group name, group symbol, and the results of the laboratory tests. The particle-size distribution shall be given in terms of percent of gravel, sand, and fines. The plot of the cumulative particle-size distribution curve shall be reported if used in classifying the soil. Report appropriate descriptive information according to the procedures in Practice D 2488. A local or commercial name or geologic interpretation for the material may be added at the end of the descriptive information if identified as such. The test procedures used shall be referenced.

NOTE 10—*Example: Clayey Gravel with Sand and Cobbles* (GC)—46 % fine to coarse, hard, subrounded gravel; 30 % fine to coarse, hard, subrounded sand; 24 % clayey fines, LL = 38, PI = 19; weak reaction with HCl; original field sample had 4 % hard, subrounded cobbles; maximum dimension 150 mm.

In-Place Conditions—firm, homogeneous, dry, brown,
Geologic Interpretation—alluvial fan.

NOTE 11—Other examples of soil descriptions are given in Appendix X1.

14. Keywords

14.1 Atterberg limits; classification; clay; gradation; gravel; laboratory classification; organic soils; sand; silt; soil classification; soil tests

APPENDIXES

(Nonmandatory Information)

X1. EXAMPLES OF DESCRIPTIONS USING SOIL CLASSIFICATION

X1.1 The following examples show how the information required in 13.1 can be reported. The appropriate descriptive information from Practice D 2488 is included for illustrative purposes. The additional descriptive terms that would accompany the soil classification should be based on the intended use of the classification and the individual circumstances.

X1.1.1 *Well-Graded Gravel with Sand (GW)*—73 % fine to coarse, hard, subangular gravel; 23 % fine to coarse, hard, subangular sand; 4 % fines; Cc = 2.7, Cu = 12.4.

X1.1.2 *Silty Sand with Gravel (SM)*—61 % predominantly fine sand; 23 % silty fines, LL = 33, PI = 6; 16 % fine, hard, subrounded gravel; no reaction with HCl; (field sample smaller than recommended). *In-Place Conditions*—Firm, stratified and contains lenses of silt 1 to 2 in. thick, moist, brown to gray; in-place density = 106 lb/ft^3 and in-place moisture = 9 %.

X1.1.3 *Organic Clay (OL)*—100 % fines, LL (not dried) = 32, LL (oven dried) = 21, PI (not dried) = 10; wet, dark brown, organic odor, weak reaction with HCl.

X1.1.4 *Silty Sand with Organic Fines (SM)*—74 % fine to coarse, hard, subangular reddish sand; 26 % organic and silty dark-brown fines, LL (not dried) = 37, LL (oven dried) = 26, PI (not dried) = 6, wet, weak reaction with HCl.

X1.1.5 *Poorly Graded Gravel with Silt, Sand, Cobbles and Boulders (GP-GM)*—78 % fine to coarse, hard, subrounded to subangular gravel; 16 % fine to coarse, hard, subrounded to subangular sand; 6 % silty (estimated) fines; moist, brown; no reaction with HCl; original field sample had 7 % hard, subrounded cobbles and 2 % hard, subrounded boulders with a maximum dimension of 18 in.

X2. USING SOIL CLASSIFICATION AS A DESCRIPTIVE SYSTEM FOR SHALE, CLAYSTONE, SHELLS, SLAG, CRUSHED ROCK, ETC.

X2.1 The group names and symbols used in this standard may be used as a descriptive system applied to materials that exist in situ as shale, claystone, sandstone, siltstone, mudstone, etc., but convert to soils after field or laboratory processing (crushing, slaking, etc.).

X2.2 Materials such as shells, crushed rock, slag, etc., should be identified as such. However, the procedures used in this standard for describing the particle size and plasticity characteristics may be used in the description of the material. If desired, a classification in accordance with this standard may be assigned to aid in describing the material.

X2.3 If a classification is used, the group symbol(s) and group names should be placed in quotation marks or noted with some type of distinguishing symbol. See examples.

X2.4 Examples of how soil classifications could be incorporated into a description system for materials that are not naturally occurring soils are as follows:

X2.4.1 *Shale Chunks*—Retrieved as 2 to 4-in. pieces of shale from power auger hole, dry, brown, no reaction with HCl. After laboratory processing by slaking in water for 24 h, material classified as "Sandy Lean Clay (CL)"—61 % clayey fines, LL = 37, PI = 16; 33 % fine to medium sand; 6 % gravel-size pieces of shale.

X2.4.2 *Crushed Sandstone*—Product of commercial crushing operation; "Poorly Graded Sand with Silt (SP-SM)"—91 % fine to medium sand; 9 % silty (estimated) fines; dry, reddish-brown, strong reaction with HCl.

X2.4.3 *Broken Shells*—62 % gravel-size broken shells;

31 % sand and sand-size shell pieces; 7 % fines; would be classified as "Poorly Graded Gravel with Sand (GP)".

X2.4.4 *Crushed Rock*—Processed gravel and cobbles from Pit No. 7; "Poorly Graded Gravel (GP)"—89 % fine, hard, angular gravel-size particles; 11 % coarse, hard, angular sand-size particles, dry, tan; no reaction with HCl; Cc = 2.4, Cu = 0.9.

X3. PREPARATION AND TESTING FOR CLASSIFICATION PURPOSES BY THE WET METHOD

X3.1 This appendix describes the steps in preparing a soil sample for testing for purposes of soil classification using a wet-preparation procedure.

X3.2 Samples prepared in accordance with this procedure should contain as much of their natural water content as possible and every effort should be made during obtaining, preparing, and transportating the samples to maintain the natural moisture.

X3.3 The procedures to be followed in this standard assume that the field sample contains fines, sand, gravel, and plus 3-in. (75-mm) particles and the cumulative particle-size distribution plus the liquid limit and plasticity index values are required (see 9.8). Some of the following steps may be omitted when they are not applicable to the soil being tested.

X3.4 If the soil contains plus No. 200 (75-µm) particles that would degrade during dry sieving, use a test procedure for determining the particle-size characteristics that prevents this degradation.

X3.5 Since this classification system is limited to the portion of a sample passing the 3-in. (75-mm) sieve, the plus 3-in. (75-mm) material shall be removed prior to the determination of the particle-size characteristics and the liquid limit and plasticity index.

X3.6 The portion of the field sample finer than the 3-in. (75-mm) sieve shall be obtained as follows:

X3.6.1 Separate the field sample into two fractions on a 3-in. (75-mm) sieve, being careful to maintain the natural water content in the minus 3-in. (75-mm) fraction. Any particles adhering to the plus 3-in. (75-mm) particles shall be brushed or wiped off and placed in the fraction passing the 3-in. (75-mm) sieve.

X3.6.2 Determine the air-dry or oven-dry weight of the fraction retained on the 3-in. (75-mm) sieve. Determine the total (wet) weight of the fraction passing the 3-in. (75-mm) sieve.

X3.6.3 Thoroughly mix the fraction passing the 3-in. (75-mm) sieve. Determine the water content, in accordance with Test Method D 2216, of a representative specimen with a minimum dry weight as required in 7.2. Save the water-content specimen for determination of the particle-size analysis in accordance with X3.8.

X3.6.4 Compute the dry weight of the fraction passing the 3-in. (75-mm) sieve based on the water content and total (wet) weight. Compute the total dry weight of the sample and calculate the percentage of material retained on the 3-in. (75-mm) sieve.

X3.7 Determine the liquid limit and plasticity index as follows:

X3.7.1 If the soil disaggregates readily, mix on a clean, hard surface and select a representative sample by quartering in accordance with Practice C 702.

X3.7.1.1 If the soil contains coarse-grained particles coated with and bound together by tough clayey material, take extreme care in obtaining a representative portion of the No. 40 (425-µm) fraction. Typically, a larger portion than normal has to be selected, such as the minimum weights required in 7.2.

X3.7.1.2 To obtain a representative specimen of a basically cohesive soil, it may be advantageous to pass the soil through a ¾-in. (19-mm) sieve or other convenient size so the material can be more easily mixed and then quartered or split to obtain the representative specimen.

X3.7.2 Process the representative specimen in accordance with Procedure B of Practice D 2217.

X3.7.3 Perform the liquid-limit test in accordance with Test Method D 4318, except the soil shall not be air dried prior to the test.

X3.7.4 Perform the plastic-limit test in accordance with Test Method D 4318, except the soil shall not be air dried prior to the test, and calculate the plasticity index.

X3.8 Determine the particle-size distribution as follows:

X3.8.1 If the water content of the fraction passing the 3-in. (75-mm) sieve was required (X3.6.3), use the water-content specimen for determining the particle-size distribution. Otherwise, select a representative specimen in accordance with Practice C 702 with a minimum dry weight as required in 7.2.

X3.8.2 If the cumulative particle-size distribution including a hydrometer analysis is required, determine the particle-size distribution in accordance with Test Method D 422. See 9.7 for the set of required sieves.

X3.8.3 If the cumulative particle-size distribution without a hydrometer analysis is required, determine the particle-size distribution in accordance with Method C 136. See 9.7 for the set of required sieves. The specimen should be soaked until all clayey aggregations have softened and then washed in accordance with Test Method C 117 prior to performing the particle-size distribution.

X3.8.4 If the cumulative particle-size distribution is not required, determine the percent fines, percent sand, and percent gravel in the specimen in accordance with Test Method C 117, being sure to soak the specimen long enough to soften all clayey aggregations, followed by Method C 136 using a nest of sieves which shall include a No. 4 (4.75-mm) sieve and a No. 200 (75-µm) sieve.

X3.8.5 Calculate the percent fines, percent sand, and percent gravel in the minus 3-in. (75-mm) fraction for classification purposes.

X4. AIR-DRIED METHOD OF PREPARATION OF SOILS FOR TESTING FOR CLASSIFICATION PURPOSES

X4.1 This appendix describes the steps in preparing a soil sample for testing for purposes of soil classification when air-drying the soil before testing is specified or desired or when the natural moisture content is near that of an air-dried state.

X4.2 If the soil contains organic matter or mineral colloids that are irreversibly affected by air drying, the wet-preparation method as described in Appendix X3 should be used.

X4.3 Since this classification system is limited to the portion of a sample passing the 3-in. (75-mm) sieve, the plus 3-in. (75-mm) material shall be removed prior to the determination of the particle-size characteristics and the liquid limit and plasticity index.

X4.4 The portion of the field sample finer than the 3-in. (75-mm) sieve shall be obtained as follows:

X4.4.1 Air dry and weigh the field sample.

X4.4.2 Separate the field sample into two fractions on a 3-in. (75-mm) sieve.

X4.4.3 Weigh the two fractions and compute the percentage of the plus 3-in. (75-mm) material in the field sample.

X4.5 Determine the particle-size distribution and liquid limit and plasticity index as follows (see 9.8 for when these tests are required):

X4.5.1 Thoroughly mix the fraction passing the 3-in. (75-mm) sieve.

X4.5.2 If the cumulative particle-size distribution including a hydrometer analysis is required, determine the particle-size distribution in accordance with Test Method D 422. See 9.7 for the set of sieves that is required.

X4.5.3 If the cumulative particle-size distribution without a hydrometer analysis is required, determine the particle-size distribution in accordance with Test Method D 1140 followed by Method C 136. See 9.7 for the set of sieves that is required.

X4.5.4 If the cumulative particle-size distribution is not required, determine the percent fines, percent sand, and percent gravel in the specimen in accordance with Test Method D 1140 followed by Method C 136 using a nest of sieves which shall include a No. 4 (4.75-mm) sieve and a No. 200 (75-μm) sieve.

X4.5.5 If required, determine the liquid limit and the plasticity index of the test specimen in accordance with Test Method D 4318.

X5. RATIONALE

X5.1 Significant revisions were made to the standard which appeared as D 2487 – 83 from the previous version of D 2487 – 69 (1975). The changes are documented in the literature.[5]

X5.2 The 1992 edition differs from the previous edition in that the title was changed to better indicate the use of the standard and identifying it as the ASTM version of the Unified Soil Classification System.

[5] Howard, A.K., "The Revised ASTM Standard on the Unified Soil Classification System," Geotechnical Testing Journal, GTJODJ Vol 7, No. 4, December 1984.

Standard Practice for Description and Identification of Soils (Visual-Manual Procedure)[1]

This standard is issued under the fixed designation D 2488; the number immediately following the designation indicates the year of original adoption or, in the case of revision, the year of last revision. A number in parentheses indicates the year of last reapproval. A superscript epsilon (ε) indicates an editorial change since the last revision or reapproval.

This standard has been approved for use by agencies of the Department of Defense. Consult the DoD Index of Specifications and Standards for the specific year of issue which has been adopted by the Department of Defense.

1. Scope

1.1 This practice covers procedures for the description of soils for engineering purposes.

1.2 This practice also describes a procedure for identifying soils, at the option of the user, based on the classification system described in Test Method D 2487. The identification is based on visual examination and manual tests. It must be clearly stated in reporting an identification that it is based on visual-manual procedures.

1.2.1 When precise classification of soils for engineering purposes is required, the procedures prescribed in Test Method D 2487 shall be used.

1.2.2 In this practice, the identification portion assigning a group symbol and name is limited to soil particles smaller than 3 in. (75 mm).

1.2.3 The identification portion of this practice is limited to naturally occurring soils (disturbed and undisturbed).

NOTE 1—This practice may be used as a descriptive system applied to such materials as shale, claystone, shells, crushed rock, etc. (See Appendix X2).

1.3 The descriptive information in this practice may be used with other soil classification systems or for materials other than naturally occurring soils.

1.4 *This standard does not purport to address all of the safety problems, if any, associated with its use. It is the responsibility of the user of this standard to establish appropriate safety and health practices and determine the applicability of regulatory limitations prior to use.* For specific precautionary statements see Section 8.

1.5 The values stated in inch-pound units are to be regarded as the standard.

2. Referenced Documents

2.1 *ASTM Standards:*

D 653 Terminology Relating to Soil, Rock, and Contained Fluids[2]

D 1452 Practice for Soil Investigation and Sampling by Auger Borings[2]

D 1586 Method for Penetration Test and Split-Barrel Sampling of Soils[2]

D 1587 Practice for Thin-Walled Tube Sampling of Soils[2]

D 2113 Practice for Diamond Core Drilling for Site Investigation[2]

D 2487 Test Method for Classification of Soils for Engineering Purposes[2]

D 4083 Practice for Description of Frozen Soils (Visual-Manual Procedure)[2]

3. Terminology

3.1 *Definitions:*

3.1.1 Except as listed below, all definitions are in accordance with Terminology D 653.

NOTE 2—For particles retained on a 3-in. (75-mm) US standard sieve, the following definitions are suggested:

Cobbles—particles of rock that will pass a 12-in. (300-mm) square opening and be retained on a 3-in. (75-mm) sieve, and

Boulders—particles of rock that will not pass a 12-in. (300-mm) square opening.

3.1.1.2 *clay*—soil passing a No. 200 (75-μm) sieve that can be made to exhibit plasticity (putty-like properties) within a range of water contents, and that exhibits considerable strength when air-dry. For classification, a clay is a fine-grained soil, or the fine-grained portion of a soil, with a plasticity index equal to or greater than 4, and the plot of plasticity index versus liquid limit falls on or above the "A" line (see Fig. 3 of Test Method D 2487).

3.1.1.3 *gravel*—particles of rock that will pass a 3-in. (75-mm) sieve and be retained on a No. 4 (4.75-mm) sieve with the following subdivisions:

coarse—passes a 3-in. (75-mm) sieve and is retained on a ¾-in. (19-mm) sieve.

fine—passes a ¾-in. (19-mm) sieve and is retained on a No. 4 (4.75-mm) sieve.

3.1.1.4 *organic clay*—a clay with sufficient organic content to influence the soil properties. For classification, an organic clay is a soil that would be classified as a clay, except that its liquid limit value after oven drying is less than 75 % of its liquid limit value before oven drying.

3.1.1.5 *organic silt*—a silt with sufficient organic content to influence the soil properties. For classification, an organic silt is a soil that would be classified as a silt except that its liquid limit value after oven drying is less than 75 % of its liquid limit value before oven drying.

3.1.1.6 *peat*—a soil composed primarily of vegetable tissue in various stages of decomposition usually with an organic odor, a dark brown to black color, a spongy consistency and texture ranging from fibrous to amorphous.

3.1.1.7 *sand*—particles of rock that will pass a No. 4

[1] This practice is under the jurisdiction of ASTM Committee D-18 on Soil and Rock and is the direct responsibility of Subcommittee D18.07 on Identification and Classification of Soils.

Current edition approved June 29, 1990. Published August 1990. Originally published as D 2488 – 66 T. Last previous edition D 2488 – 84[ε1].

[2] *Annual Book of ASTM Standards*, Vol 04.08.

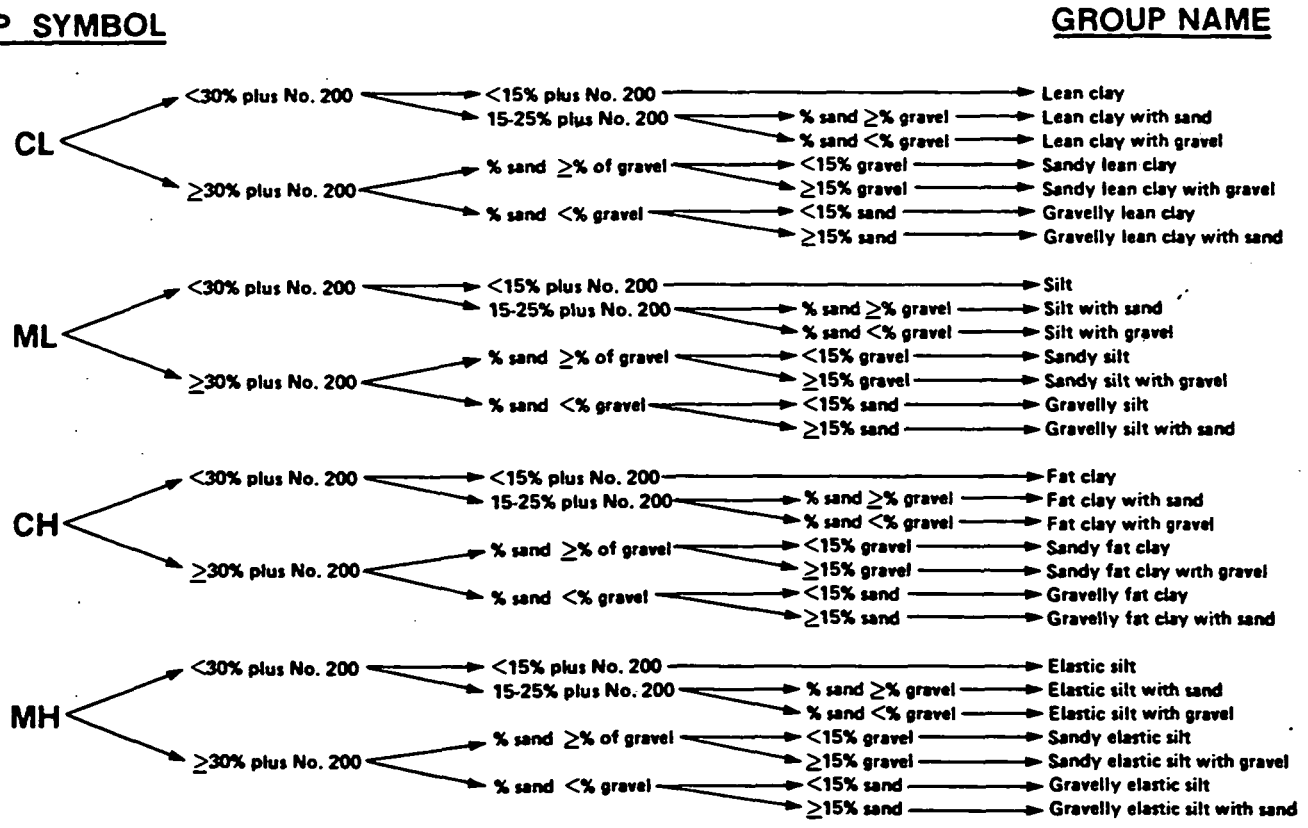

NOTE—Percentages are based on estimating amounts of fines, sand, and gravel to the nearest 5 %.

FIG. 1a Flow Chart for Identifying Inorganic Fine-Grained Soil (50 % or more fines)

(4.75-mm) sieve and be retained on a No. 200 (75-µm) sieve with the following subdivisions:

coarse—passes a No. 4 (4.75-mm) sieve and is retained on a No. 10 (2.00-mm) sieve.

medium—passes a No. 10 (2.00-mm) sieve and is retained on a No. 40 (425-µm) sieve.

fine—passes a No. 40 (425-µm) sieve and is retained on a No. 200 (75-µm) sieve.

3.1.1.8 *silt*—soil passing a No. 200 (75-µm) sieve that is nonplastic or very slightly plastic and that exhibits little or no strength when air dry. For classification, a silt is a fine-grained soil, or the fine-grained portion of a soil, with a plasticity index less than 4, or the plot of plasticity index versus liquid limit falls below the "A" line (see Fig. 3 of Test Method D 2487).

4. Summary of Practice

4.1 Using visual examination and simple manual tests, this practice gives standardized criteria and procedures for describing and identifying soils.

4.2 The soil can be given an identification by assigning a group symbol(s) and name. The flow charts, Figs. 1a and 1b for fine-grained soils, and Fig. 2, for coarse-grained soils, can be used to assign the appropriate group symbol(s) and name. If the soil has properties which do not distinctly place it into a specific group, borderline symbols may be used, see Appendix X3.

NOTE 3—It is suggested that a distinction be made between *dual symbols* and *borderline symbols*.

Dual Symbol—A dual symbol is two symbols separated by a hyphen, for example, GP-GM, SW-SC, CL-ML used to indicate that the soil has been identified as having the properties of a classification in accordance with Test Method D 2487 where two symbols are required. Two symbols are required when the soil has between 5 and 12 % fines or

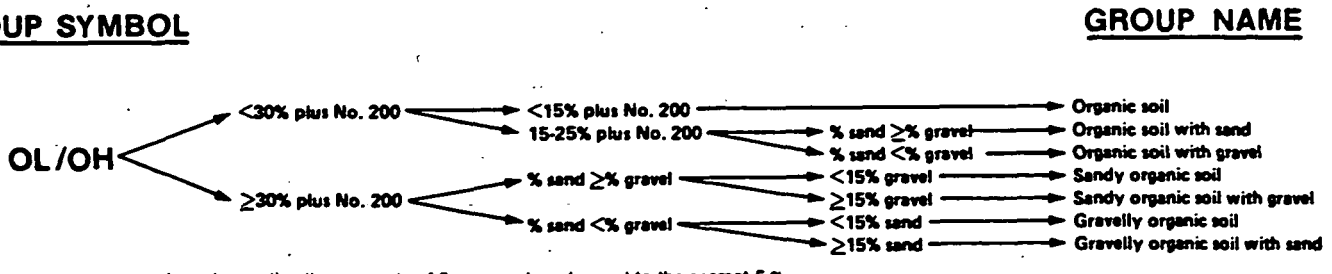

NOTE—Percentages are based on estimating amounts of fines, sand, and gravel to the nearest 5 %.

FIG. 1b Flow Chart for Identifying Organic Fine-Grained Soil (50 % or more fines)

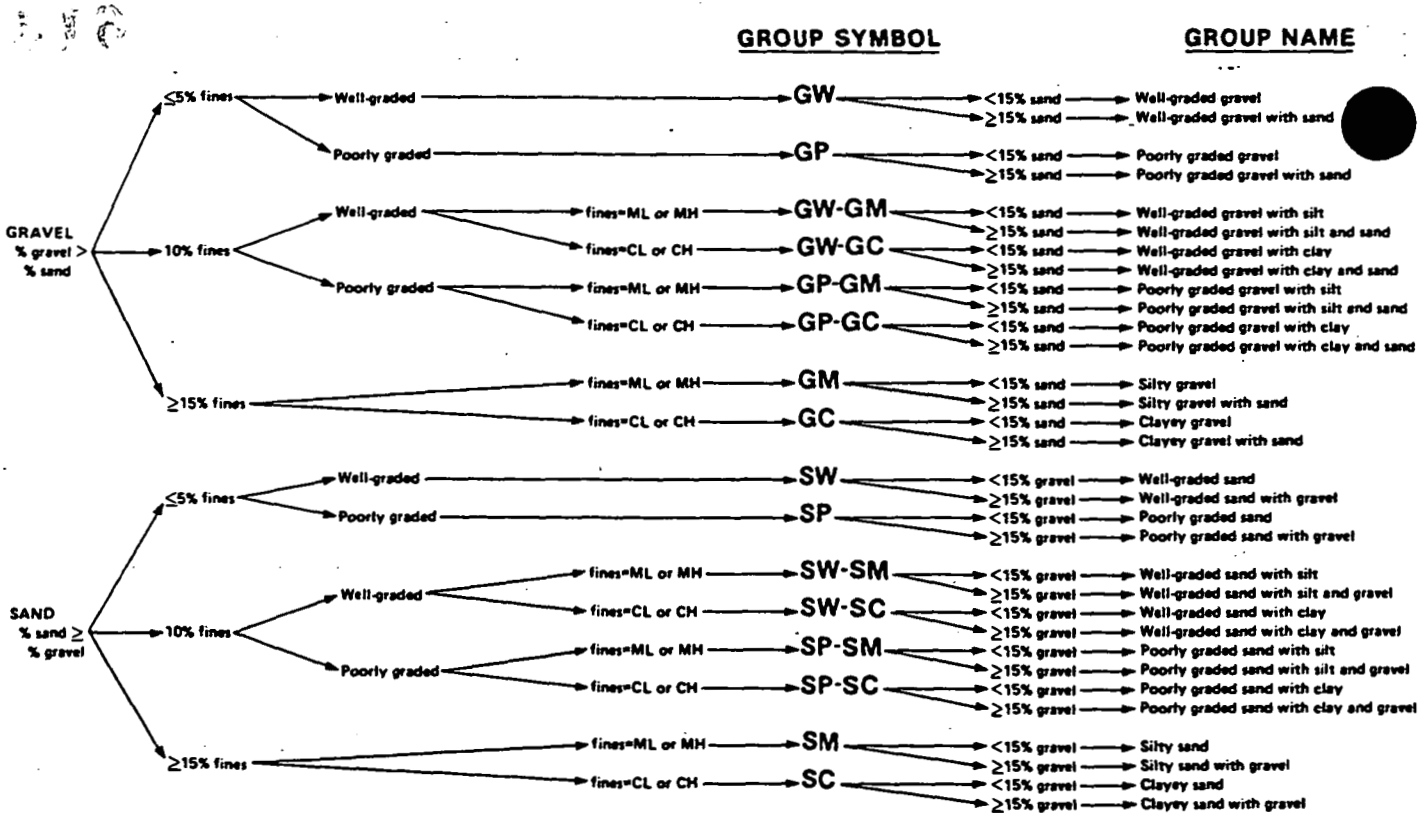

NOTE—Percentages are based on estimating amounts of fines, sand, and gravel to the nearest 5 %.

FIG. 2 Flow Chart for Identifying Coarse-Grained Soils (less than 50 % fines)

when the liquid limit and plasticity index values plot in the CL-ML area of the plasticity chart.

Borderline Symbol—A borderline symbol is two symbols separated by a slash, for example, CL/CH, GM/SM, CL/ML. A borderline symbol should be used to indicate that the soil has been identified as having properties that do not distinctly place the soil into a specific group (see Appendix X3).

5. Significance and Use

5.1 The descriptive information required in this practice can be used to describe a soil to aid in the evaluation of its significant properties for engineering use.

5.2 The descriptive information required in this practice should be used to supplement the classification of a soil as determined by Test Method D 2487.

5.3 This practice may be used in identifying soils using the classification group symbols and names as prescribed in Test Method D 2487. Since the names and symbols used in this practice to identify the soils are the same as those used in Test Method D 2487, it shall be clearly stated in reports and all other appropriate documents, that the classification symbol and name are based on visual-manual procedures.

5.4 This practice is to be used not only for identification of soils in the field, but also in the office, laboratory, or wherever soil samples are inspected and described.

5.5 This practice has particular value in grouping similar soil samples so that only a minimum number of laboratory tests need be run for positive soil classification.

NOTE 4—The ability to describe and identify soils correctly is learned more readily under the guidance of experienced personnel, but it may also be acquired systematically by comparing numerical laboratory test results for typical soils of each type with their visual and m characteristics.

5.6 When describing and identifying soil samples from a given boring, test pit, or group of borings or pits, it is not necessary to follow all of the procedures in this practice for every sample. Soils which appear to be similar can be grouped together; one sample completely described and identified with the others referred to as similar based on performing only a few of the descriptive and identification procedures described in this practice.

5.7 This practice may be used in combination with Practice D 4083 when working with frozen soils.

6. Apparatus

6.1 *Required Apparatus:*

6.1.1 *Pocket Knife or Small Spatula.*

6.2 *Useful Auxiliary Apparatus:*

6.2.1 *Small Test Tube and Stopper* (or jar with a lid).

6.2.2 *Small Hand Lens.*

7. Reagents

7.1 *Purity of Water*—Unless otherwise indicated, references to water shall be understood to mean water from a city water supply or natural source, including non-potable water.

7.2 *Hydrochloric Acid*—A small bottle of dilute hy chloric acid, HCl, one part HCl (10 *N*) to three parts w (This reagent is optional for use with this practice). See Section 8.

000307

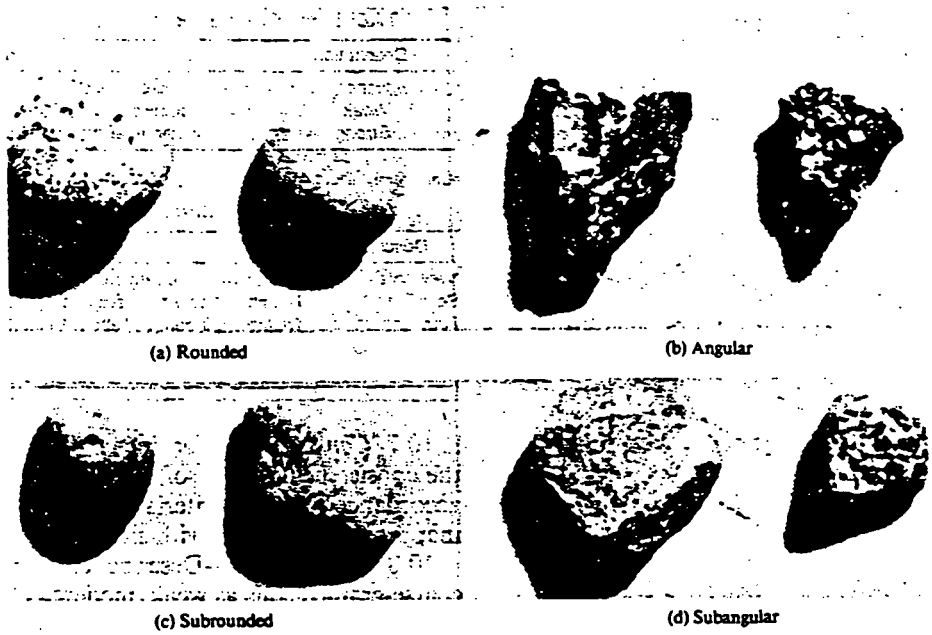

FIG. 3 Typical Angularity of Bulky Grains

8. Safety Precautions

8.1 When preparing the dilute HCl solution of one part concentrated hydrochloric acid (10 *N*) to three parts of distilled water, slowly add acid into water following necessary safety precautions. Handle with caution and store safely. If solution comes into contact with the skin, rinse thoroughly with water.

8.2 Caution—Do not add water to acid.

9. Sampling

9.1 The sample shall be considered to be representative of the stratum from which it was obtained by an appropriate, accepted, or standard procedure.

NOTE 5—Preferably, the sampling procedure should be identified as having been conducted in accordance with Practices D 1452, D 1587, or D 2113, or Method D 1586.

9.2 The sample shall be carefully identified as to origin.

NOTE 6—Remarks as to the origin may take the form of a boring number and sample number in conjunction with a job number, a geologic stratum, a pedologic horizon or a location description with respect to a permanent monument, a grid system or a station number and offset with respect to a stated centerline and a depth or elevation.

9.3 For accurate description and identification, the minimum amount of the specimen to be examined shall be in accordance with the following schedule:

Maximum Particle Size, Sieve Opening	Minimum Specimen Size, Dry Weight
4.75 mm (No. 4)	100 g (0.5 lb)
9.5 mm (⅜ in.)	200 g (0.5 lb)
19.0 mm (¾ in.)	1.0 kg (2.2 lb)
38.1 mm (1½ in.)	8.0 kg (18 lb)
75.0 mm (3 in.)	60.0 kg (132 lb)

NOTE 7—If random isolated particles are encountered that are significantly larger than the particles in the soil matrix, the soil matrix can be accurately described and identified in accordance with the preceeding schedule.

9.4 If the field sample or specimen being examined is smaller than the minimum recommended amount, the report shall include an appropriate remark.

TABLE 1 Criteria for Describing Angularity of Coarse-Grained Particles (see Fig. 3)

Description	Criteria
Angular	Particles have sharp edges and relatively plane sides with unpolished surfaces
Subangular	Particles are similar to angular description but have rounded edges
Subrounded	Particles have nearly plane sides but have well-rounded corners and edges
Rounded	Particles have smoothly curved sides and no edges

10. Descriptive Information for Soils

10.1 *Angularity*—Describe the angularity of the sand (coarse sizes only), gravel, cobbles, and boulders, as angular, subangular, subrounded, or rounded in accordance with the criteria in Table 1 and Fig. 3. A range of angularity may be stated, such as: subrounded to rounded.

10.2 *Shape*—Describe the shape of the gravel, cobbles, and boulders as flat, elongated, or flat and elongated if they meet the criteria in Table 2 and Fig. 4. Otherwise, do not mention the shape. Indicate the fraction of the particles that have the shape, such as: one-third of the gravel particles are flat.

10.3 *Color*—Describe the color. Color is an important property in identifying organic soils, and within a given

TABLE 2 Criteria for Describing Particle Shape (see Fig. 4)

The particle shape shall be described as follows where length, width, and thickness refer to the greatest, intermediate, and least dimensions of a particle, respectively.

Flat	Particles with width/thickness > 3
Elongated	Particles with length/width > 3
Flat and elongated	Particles meet criteria for both flat and elongated

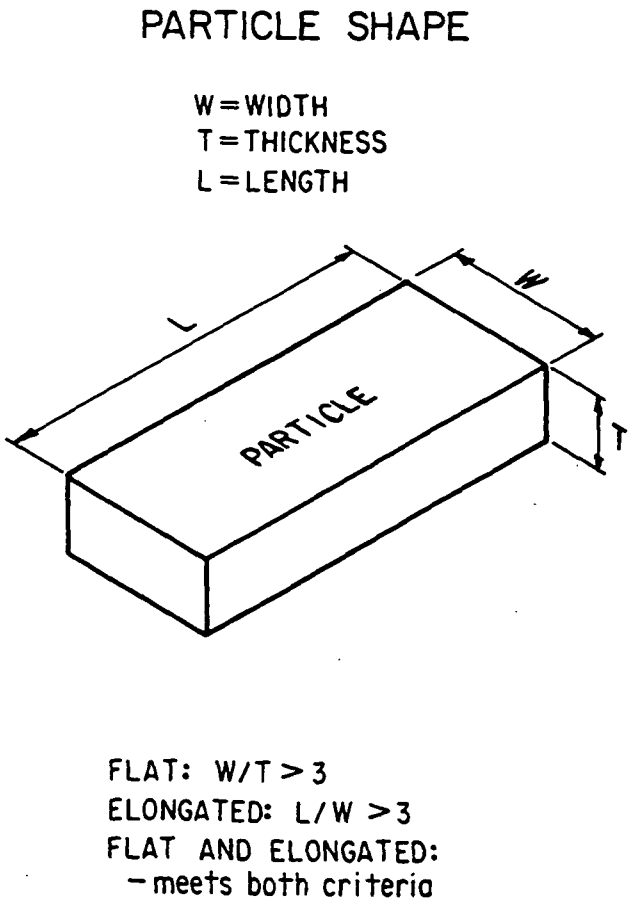

FIG. 4 Criteria for Particle Shape

TABLE 3 Criteria for Describing Moisture Condition

Description	Criteria
Dry	Absence of moisture, dusty, dry to the touch
Moist	Damp but no visible water
Wet	Visible free water, usually soil is below water table

locality it may also be useful in identifying materials of similar geologic origin. If the sample contains layers or patches of varying colors, this shall be noted and all representative colors shall be described. The color shall be described for moist samples. If the color represents a dry condition, this shall be stated in the report.

10.4 *Odor*—Describe the odor if organic or unusual. Soils containing a significant amount of organic material usually have a distinctive odor of decaying vegetation. This is especially apparent in fresh samples, but if the samples are dried, the odor may often be revived by heating a moistened sample. If the odor is unusual (petroleum product, chemical, and the like), it shall be described.

10.5 *Moisture Condition*—Describe the moisture condition as dry, moist, or wet, in accordance with the criteria in Table 3.

10.6 *HCl Reaction*—Describe the reaction with HCl as none, weak, or strong, in accordance with the critera in Table 4. Since calcium carbonate is a common cementing agent, a report of its presence on the basis of the reaction with dilute hydrochloric acid is important.

TABLE 4 Criteria for Describing the Reaction With HCl

Description	Criteria
None	No visible reaction
Weak	Some reaction, with bubbles forming slowly
Strong	Violent reaction, with bubbles forming immediately

TABLE 5 Criteria for Describing Consistency

Description	Criteria
Very soft	Thumb will penetrate soil more than 1 in. (25 mm)
Soft	Thumb will penetrate soil about 1 in. (25 mm)
Firm	Thumb will indent soil about ¼ in. (6 mm)
Hard	Thumb will not indent soil but readily indented with thumbnail
Very hard	Thumbnail will not indent soil

10.7 *Consistency*—For intact fine-grained soil, describe the consistency as very soft, soft, firm, hard, or very hard, in accordance with the criteria in Table 5. This observation is inappropriate for soils with significant amounts of gravel.

10.8 *Cementation*—Describe the cementation of intact coarse-grained soils as weak, moderate, or strong, in accordance with the criteria in Table 6.

10.9 *Structure*—Describe the structure of intact soils in accordance with the criteria in Table 7.

10.10 *Range of Particle Sizes*—For gravel and sand components, describe the range of particle sizes within each component as defined in 3.1.2 and 3.1.6. For example, about 20 % fine to coarse gravel, about 40 % fine to coarse sand.

10.11 *Maximum Particle Size*—Describe the maximum particle size found in the sample in accordance with the following information:

10.11.1 *Sand Size*—If the maximum particle size is sand size, describe as fine, medium, or coarse as defined in 3.1.6. For example: maximum particle size, medium sand.

10.11.2 *Gravel Size*—If the maximum particle size is a gravel size, describe the maximum particle size as the smallest sieve opening that the particle will pass. For example, maximum particle size, 1½ in. (will pass a 1½-in. square opening but not a ¾-in. square opening).

10.11.3 *Cobble or Boulder Size*—If the maximum particle size is a cobble or boulder size, describe the maximum dimension of the largest particle. For example: maximum dimension, 18 in. (450 mm).

10.12 *Hardness*—Describe the hardness of coarse sand and larger particles as hard, or state what happens when the particles are hit by a hammer, for example, gravel-size particles fracture with considerable hammer blow, some gravel-size particles crumble with hammer blow. "Hard" means particles do not crack, fracture, or crumble under a hammer blow.

10.13 Additional comments shall be noted, such as the presence of roots or root holes, difficulty in drilling or augering hole, caving of trench or hole, or the presence of mica.

10.14 A local or commercial name or a geologic interpre-

TABLE 6 Criteria for Describing Cementation

Description	Criteria
Weak	Crumbles or breaks with handling or little finger pressure
Moderate	Crumbles or breaks with considerable finger pressure
Strong	Will not crumble or break with finger pressure

TABLE 7 Criteria for Describing Structure

Description	Criteria
Stratified	Alternating layers of varying material or color with layers at least 6 mm thick; note thickness
Laminated	Alternating layers of varying material or color with the layers less than 6 mm thick; note thickness
Fissured	Breaks along definite planes of fracture with little resistance to fracturing
Slickensided	Fracture planes appear polished or glossy, sometimes striated
Blocky	Cohesive soil that can be broken down into small angular lumps which resist further breakdown
Lensed	Inclusion of small pockets of different soils, such as small lenses of sand scattered through a mass of clay; note thickness
Homogeneous	Same color and appearance throughout

tation of the soil, or both, may be added if identified as such.

10.15 A classification or identification of the soil in accordance with other classification systems may be added if identified as such.

11. Identification of Peat

11.1 A sample composed primarily of vegetable tissue in various stages of decomposition that has a fibrous to amorphous texture, usually a dark brown to black color, and an organic odor, shall be designated as a highly organic soil and shall be identified as peat, PT, and not subjected to the identification procedures described hereafter.

12. Preparation for Identification

12.1 The soil identification portion of this practice is based on the portion of the soil sample that will pass a 3-in. (75-mm) sieve. The larger than 3-in. (75-mm) particles must be removed, manually, for a loose sample, or mentally, for an intact sample before classifying the soil.

12.2 Estimate and note the percentage of cobbles and the percentage of boulders. Performed visually, these estimates will be on the basis of volume percentage.

NOTE 8—Since the percentages of the particle-size distribution in Test Method D 2487 are by dry weight, and the estimates of percentages for gravel, sand, and fines in this practice are by dry weight, it is recommended that the report state that the percentages of cobbles and boulders are by volume.

12.3 Of the fraction of the soil smaller than 3 in. (75 mm), estimate and note the percentage, by dry weight, of the gravel, sand, and fines (see Appendix X4 for suggested procedures).

NOTE 9—Since the particle-size components appear visually on the basis of volume, considerable experience is required to estimate the percentages on the basis of dry weight. Frequent comparisons with laboratory particle-size analyses should be made.

12.3.1 The percentages shall be estimated to the closest 5 %. The percentages of gravel, sand, and fines must add up to 100 %.

12.3.2 If one of the components is present but not in sufficient quantity to be considered 5 % of the smaller than 3-in. (75-mm) portion, indicate its presence by the term *trace*, for example, trace of fines. A trace is not to be considered in the total of 100 % for the components.

13. Preliminary Identification

13.1 The soil is *fine grained* if it contains 50 % or more fines. Follow the procedures for identifying fine-grained soils of Section 14.

13.2 The soil is *coarse grained* if it contains less than 50 % fines. Follow the procedures for identifying coarse-grained soils of Section 15.

14. Procedure for Identifying Fine-Grained Soils

14.1 Select a representative sample of the material for examination. Remove particles larger than the No. 40 sieve (medium sand and larger) until a specimen equivalent to about a handful of material is available. Use this specimen for performing the dry strength, dilatancy, and toughness tests.

14.2 *Dry Strength:*

14.2.1 From the specimen, select enough material to mold into a ball about 1 in. (25 mm) in diameter. Mold the material until it has the consistency of putty, adding water if necessary.

14.2.2 From the molded material, make at least three test specimens. A test specimen shall be a ball of material about ½ in. (12 mm) in diameter. Allow the test specimens to dry in air, or sun, or by artificial means, as long as the temperature does not exceed 60°C.

14.2.3 If the test specimen contains natural dry lumps, those that are about ½ in. (12 mm) in diameter may be used in place of the molded balls.

NOTE 10—The process of molding and drying usually produces higher strengths than are found in natural dry lumps of soil.

14.2.4 Test the strength of the dry balls or lumps by crushing between the fingers. Note the strength as none, low, medium, high, or very high in accorance with the criteria in Table 8. If natural dry lumps are used, do not use the results of any of the lumps that are found to contain particles of coarse sand.

14.2.5 The presence of high-strength water-soluble cementing materials, such as calcium carbonate, may cause exceptionally high dry strengths. The presence of calcium carbonate can usually be detected from the intensity of the reaction with dilute hydrochloric acid (see 10.6).

14.3 *Dilatancy:*

14.3.1 From the specimen, select enough material to mold into a ball about ½ in. (12 mm) in diameter. Mold the material, adding water if necessary, until it has a soft, but not sticky, consistency.

14.3.2 Smooth the soil ball in the palm of one hand with the blade of a knife or small spatula. Shake horizontally, striking the side of the hand vigorously against the other hand several times. Note the reaction of water appearing on

TABLE 8 Criteria for Describing Dry Strength

Description	Criteria
None	The dry specimen crumbles into powder with mere pressure of handling
Low	The dry specimen crumbles into powder with some finger pressure
Medium	The dry specimen breaks into pieces or crumbles with considerable finger pressure
High	The dry specimen cannot be broken with finger pressure. Specimen will break into pieces between thumb and a hard surface
Very high	The dry specimen cannot be broken between the thumb and a hard surface

TABLE 9 Criteria for Describing Dilatancy

Description	Criteria
None	No visible change in the specimen
Slow	Water appears slowly on the surface of the specimen during shaking and does not disappear or disappears slowly upon squeezing
Rapid	Water appears quickly on the surface of the specimen during shaking and disappears quickly upon squeezing

TABLE 10 Criteria for Describing Toughness

Description	Criteria
Low	Only slight pressure is required to roll the thread near the plastic limit. The thread and the lump are weak and soft
Medium	Medium pressure is required to roll the thread to near the plastic limit. The thread and the lump have medium stiffness
High	Considerable pressure is required to roll the thread to near the plastic limit. The thread and the lump have very high stiffness

the surface of the soil. Squeeze the sample by closing the hand or pinching the soil between the fingers, and note the reaction as none, slow, or rapid in accordance with the criteria in Table 9. The reaction is the speed with which water appears while shaking, and disappears while squeezing.

14.4 *Toughness:*

14.4.1 Following the completion of the dilatancy test, the test specimen is shaped into an elongated pat and rolled by hand on a smooth surface or between the palms into a thread about ⅛ in. (3 mm) in diameter. (If the sample is too wet to roll easily, it should be spread into a thin layer and allowed to lose some water by evaporation.) Fold the sample threads and reroll repeatedly until the thread crumbles at a diameter of about ⅛ in. The thread will crumble at a diameter of ⅛ in. when the soil is near the plastic limit. Note the pressure required to roll the thread near the plastic limit. Also, note the strength of the thread. After the thread crumbles, the pieces should be lumped together and kneaded until the lump crumbles. Note the toughness of the material during kneading.

14.4.2 Describe the toughness of the thread and lump as low, medium, or high in accordance with the criteria in Table 10.

14.5 *Plasticity*—On the basis of observations made during the toughness test, describe the plasticity of the material in accordance with the criteria given in Table 11.

14.6 Decide whether the soil is an *inorganic* or an *organic* fine-grained soil (see 14.8). If inorganic, follow the steps given in 14.7.

14.7 *Identification of Inorganic Fine-Grained Soils:*

TABLE 11 Criteria for Describing Plasticity

Description	Criteria
Nonplastic	A ⅛-in. (3-mm) thread cannot be rolled at any water content
Low	The thread can barely be rolled and the lump cannot be formed when drier than the plastic limit
Medium	The thread is easy to roll and not much time is required to reach the plastic limit. The thread cannot be rerolled after reaching the plastic limit. The lump crumbles when drier than the plastic limit
High	It takes considerable time rolling and kneading to reach the plastic limit. The thread can be rerolled several times after reaching the plastic limit. The lump can be formed without crumbling when drier than the plastic limit

14.7.1 Identify the soil as a *lean clay*, CL, if the soil has medium to high dry strength, no or slow dilatancy, and medium toughness and plasticity (see Table 12).

14.7.2 Identify the soil as a *fat clay*, CH, if the soil has high to very high dry strength, no dilatancy, and high toughness and plasticity (see Table 12).

14.7.3 Identify the soil as a *silt*, ML, if the soil has no to low dry strength, slow to rapid dilatancy, and low toughness and plasticity, or is nonplastic (see Table 12).

14.7.4 Identify the soil as an *elastic silt*, MH, if the soil has low to medium dry strength, no to slow dilatancy, and low to medium toughness and plasticity (see Table 12).

NOTE 11—These properties are similar to those for a lean clay. However, the silt will dry quickly on the hand and have a smooth, silky feel when dry. Some soils that would classify as MH in accordance with the criteria in Test Method D 2487 are visually difficult to distinguish from lean clays, CL. It may be necessary to perform laboratory testing for proper identification.

14.8 *Identification of Organic Fine-Grained Soils:*

14.8.1 Identify the soil as an *organic soil*, OL/OH, if the soil contains enough organic particles to influence the soil properties. Organic soils usually have a dark brown to black color and may have an organic odor. Often, organic soils will change color, for example, black to brown, when exposed to the air. Some organic soils will lighten in color significantly when air dried. Organic soils normally will not have a high toughness or plasticity. The thread for the toughness test will be spongy.

NOTE 12—In some cases, through practice and experience, it may be possible to further identify the organic soils as organic silts or organic clays, OL or OH. Correlations between the dilatancy, dry strength, toughness tests, and laboratory tests can be made to identify organic soils in certain deposits of similar materials of known geologic origin.

14.9 If the soil is estimated to have 15 to 25 % sand or gravel, or both, the words "with sand" or "with gravel" (whichever is more predominant) shall be added to the group name. For example: "lean clay with sand, CL" or "silt with gravel, ML" (see Figs. 1a and 1b). If the percentage of sand is equal to the percentage of gravel, use "with sand."

14.10 If the soil is estimated to have 30 % or more sand or gravel, or both, the words "sandy" or "gravelly" shall be added to the group name. Add the word "sandy" if there appears to be more sand than gravel. Add the word "gravelly" if there appears to be more gravel than sand. For example: "sandy lean clay, CL", "gravelly fat clay, CH", or "sandy silt, ML" (see Figs. 1a and 1b). If the percentage of sand is equal to the percent of gravel, use "sandy."

15. Procedure for Identifying Coarse-Grained Soils (Contains less than 50 % fines)

15.1 The soil is a *gravel* if the percentage of gravel is estimated to be more than the percentage of sand.

TABLE 12 Identification of Inorganic Fine-Grained Soils from Manual Tests

Soil Symbol	Dry Strength	Dilatancy	Toughness
ML	None to low	Slow to rapid	Low or thread cannot be formed
CL	Medium to high	None to slow	Medium
MH	Low to medium	None to slow	Low to medium
CH	High to very high	None	High

The soil is a *sand* if the percentage of gravel is estimated to be equal to or less than the percentage of sand.

15.3 The soil is a *clean gravel* or *clean sand* if the percentage of fines is estimated to be 5 % or less.

15.3.1 Identify the soil as a *well-graded gravel*, GW, or as a *well-graded sand*, SW, if it has a wide range of particle sizes and substantial amounts of the intermediate particle sizes.

15.3.2 Identify the soil as a *poorly graded gravel*, GP, or as a *poorly graded sand*, SP, if it consists predominantly of one size (uniformly graded), or it has a wide range of sizes with some intermediate sizes obviously missing (gap or skip graded).

15.4 The soil is either a *gravel with fines* or a *sand with fines* if the percentage of fines is estimated to be 15 % or more.

15.4.1 Identify the soil as a *clayey gravel*, GC, or a *clayey sand*, SC, if the fines are clayey as determined by the procedures in Section 14.

15.4.2 Identify the soil as a *silty gravel*, GM, or a *silty sand*, SM, if the fines are silty as determined by the procedures in Section 14.

15.5 If the soil is estimated to contain 10 % fines, give the soil a dual identification using two group symbols.

15.5.1 The first group symbol shall correspond to a clean gravel or sand (GW, GP, SW, SP) and the second symbol shall correspond to a gravel or sand with fines (GC, GM, SC, SM).

15.5.2 The group name shall correspond to the first group symbol plus the words "with clay" or "with silt" to indicate plasticity characteristics of the fines. For example: "well-graded gravel with clay, GW-GC" or "poorly graded sand with silt, SP-SM" (see Fig. 2).

15.6 If the specimen is predominantly sand or gravel but contains an estimated 15 % or more of the other coarse-grained constituent, the words "with gravel" or "with sand" shall be added to the group name. For example: "poorly graded gravel with sand, GP" or "clayey sand with gravel, SC" (see Fig. 2).

15.7 If the field sample contains any cobbles or boulders, or both, the words "with cobbles" or "with cobbles and boulders" shall be added to the group name. For example: "silty gravel with cobbles, GM."

16. Report

16.1 The report shall include the information as to origin, and the items indicated in Table 13.

NOTE 13—*Example: Clayey Gravel with Sand and Cobbles, GC*—About 50 % fine to coarse, subrounded to subangular gravel; about 30 % fine to coarse, subrounded sand; about 20 % fines with medium plasticity, high dry strength, no dilatancy, medium toughness; weak reaction with HCl; original field sample had about 5 % (by volume) subrounded cobbles, maximum dimension, 150 mm.

In-Place Conditions—Firm, homogeneous, dry, brown

Geologic Interpretation—Alluvial fan

NOTE 14—Other examples of soil descriptions and identification are given in Appendixes X1 and X2.

NOTE 15—If desired, the percentages of gravel, sand, and fines may be stated in terms indicating a range of percentages, as follows:

Trace—Particles are present but estimated to be less than 5 %
Few—5 to 10 %
Little—15 to 25 %
Some—30 to 45 %
Mostly—50 to 100 %

TABLE 13 Checklist for Description of Soils

1. Group name
2. Group symbol
3. Percent of cobbles or boulders, or both (by volume)
4. Percent of gravel, sand, or fines, or all three (by dry weight)
5. Particle-size range:
   Gravel—fine, coarse
   Sand—fine, medium, coarse
6. Particle angularity: angular, subangular, subrounded, rounded
7. Particle shape: (if appropriate) flat, elongated, flat and elongated
8. Maximum particle size or dimension
9. Hardness of coarse sand and larger particles
10. Plasticity of fines: nonplastic, low, medium, high
11. Dry strength: none, low, medium, high, very high
12. Dilatancy: none, slow, rapid
13. Toughness: low, medium, high
14. Color (in moist condition)
15. Odor (mention only if organic or unusual)
16. Moisture: dry, moist, wet
17. Reaction with HCl: none, weak, strong

For intact samples:

18. Consistency (fine-grained soils only): very soft, soft, firm, hard, very hard
19. Structure: stratified, laminated, fissured, slickensided, lensed, homogeneous
20. Cementation: weak, moderate, strong
21. Local name
22. Geologic interpretation
23. Additional comments: presence of roots or root holes, presence of mica, gypsum, etc., surface coatings on coarse-grained particles, caving or sloughing of auger hole or trench sides, difficulty in augering or excavating, etc.

16.2 If, in the soil description, the soil is identified using a classification group symbol and name as described in Test Method D 2487, it must be distinctly and clearly stated in log forms, summary tables, reports, and the like, that the symbol and name are based on visual-manual procedures.

17. Precision and Bias

17.1 This practice provides qualitative information only, therefore, a precision and bias statement is not applicable.

18. Keywords

18.1 classification; clay; gravel; organic soils; sand; silt; soil classification; soil description; visual classification

Standard Test Method for Density of Soil in Place by the Drive-Cylinder Method[1]

This standard is issued under the fixed designation D 2937; the number immediately following the designation indicates the year of original adoption or, in the case of revision, the year of last revision. A number in parentheses indicates the year of last reapproval. A superscript epsilon (ε) indicates an editorial change since the last revision or reapproval.

This test method has been approved for use by agencies of the Department of Defense. Consult the DoD Index of Specifications and Standards for the specific year of issue which has been adopted by the Department of Defense.

1. Scope

1.1 This test method covers the determination of in-place density of soil by the drive-cylinder method. The test method involves obtaining a relatively undisturbed soil sample by driving a thin-walled cylinder and the subsequent activities for the determination of in-place density. Two procedures are described for this test, one for testing at the surface, and one for testing at greater depths.

1.2 This test method is not appropriate for sampling organic soils, very hard soils which cannot be easily penetrated, soils of low plasticity which will not be readily retained in the cylinder, or soils which contain appreciable amounts of coarse or granular material.

1.3 This test method is limited to the procedures necessary for obtaining specimens suitable for determining the in-place density and water content of certain soils. The procedures and precautions necessary for obtaining undisturbed samples suitable for laboratory testing or otherwise determining engineering properties is beyond the scope of this test method.

NOTE 1—The general principles of this test method have been successfully used to obtain samples of some field compacted fine-grained soils having a maximum particle size of 4.75-mm for purposes other than density determinations such as the testing for engineering properties.

1.4 Values may be stated in inch-pound, gram-centimetre, or other units, provided the appropriate conversion factors are used to maintain consistency of units throughout the determinations and calculations.

1.5 *This standard does not purport to address the safety problems associated with its use. It is the responsibility of the user of this standard to establish appropriate safety and health practices and determine the applicability of regulatory limitations prior to use.*

2. Referenced Documents

2.1 *ASTM Standards:*

D 653 Terminology Relating to Soil, Rock, and Contained Fluids[2]

D 698 Test Methods for Moisture-Density Relations of Soils and Soil-Aggregate Mixtures Using 5.5-lb (2.49-kg) Rammer and 12-in. (305-mm) Drop[2]

D 1557 Test Methods for Moisture-Density Relations of Soils and Soil-Aggregate Mixtures Using 10-lb (4.54-kg) Rammer and 18-in. (457-mm) Drop[2]

D 2216 Method for Laboratory Determination of Water (Moisture) Content of Soil, Rock and Soil-Aggregate Mixtures[2]

3. Significance and Use

3.1 This test method can be used to determine the in-place density of natural, inorganic, fine-grained soils.

3.2 This test method may also be used to determine the in-place density of compacted soils used in construction of structural fill, highway embankments, or earth dams.

3.3 This test method is not recommended for use in organic, noncohesive, or friable soils. This test method is not applicable to soft, highly plastic, or saturated or other soils which are easily deformed, or which may not be retained in the drive cylinder. The use in fine-grained soils containing appreciable coarse material may not yield meaningful results and may damage the drive-cylinder equipment.

4. Apparatus

4.1 *Drive Cylinders,* with diameters of approximately 2 to 5½ in. (50 to 140 mm) or larger. Typical details of two types of drive cylinders with outside diameters of 3.0 in. (76.2 mm) are shown in Figs. 1 and 2. Drive cylinders of other diameters will require proportional changes in the drive-cylinder tube and drive-head dimensions. The volume of the cylinders with the dimensions shown in Figs. 1 and 2 is approximately 0.01 ft^3 (283 cm^3). The apparatus shown in Fig. 1 is of a design suitable for use at or near the surface. The threaded apparatus shown in Fig. 2 is of a design for use at greater depths.

4.1.1 The number of cylinders required depends on the number of samples to be taken and the anticipated rapidity by which the cylinders can be returned to service after weighing, cleaning, etc. A minimum of six cylinders is recommended.

4.1.2 The cylinders shown in Figs. 1 and 2 meet the wall thickness and area-ratio requirements as set forth by Hvorslev[3] for drive samplers, this is 10 to 15%, as defined by the following:

$$A_r = [(D_e^2 - D_i^2)/D_i^2] \times 100 \quad (1)$$

where:

A_r = area ratio, %,

[1] This test method is under the jurisdiction of ASTM Committee D-18 on Soil and Rock and is the direct responsibility of Subcommittee D18.08 on Special and Construction Control Tests.

Current edition approved Nov. 28, 1983. Published January 1984. Originally published as D 2937 – 71. Last previous edition D 2937 – 71 (1976).

[2] *Annual Book of ASTM Standards,* Vol 04.08.

[3] Hvorslev, M. J., "Surface Exploration and Sampling of Soils for Engineering Purposes," Engineering Foundation, 345 E. 47th St., New York, NY 10017.

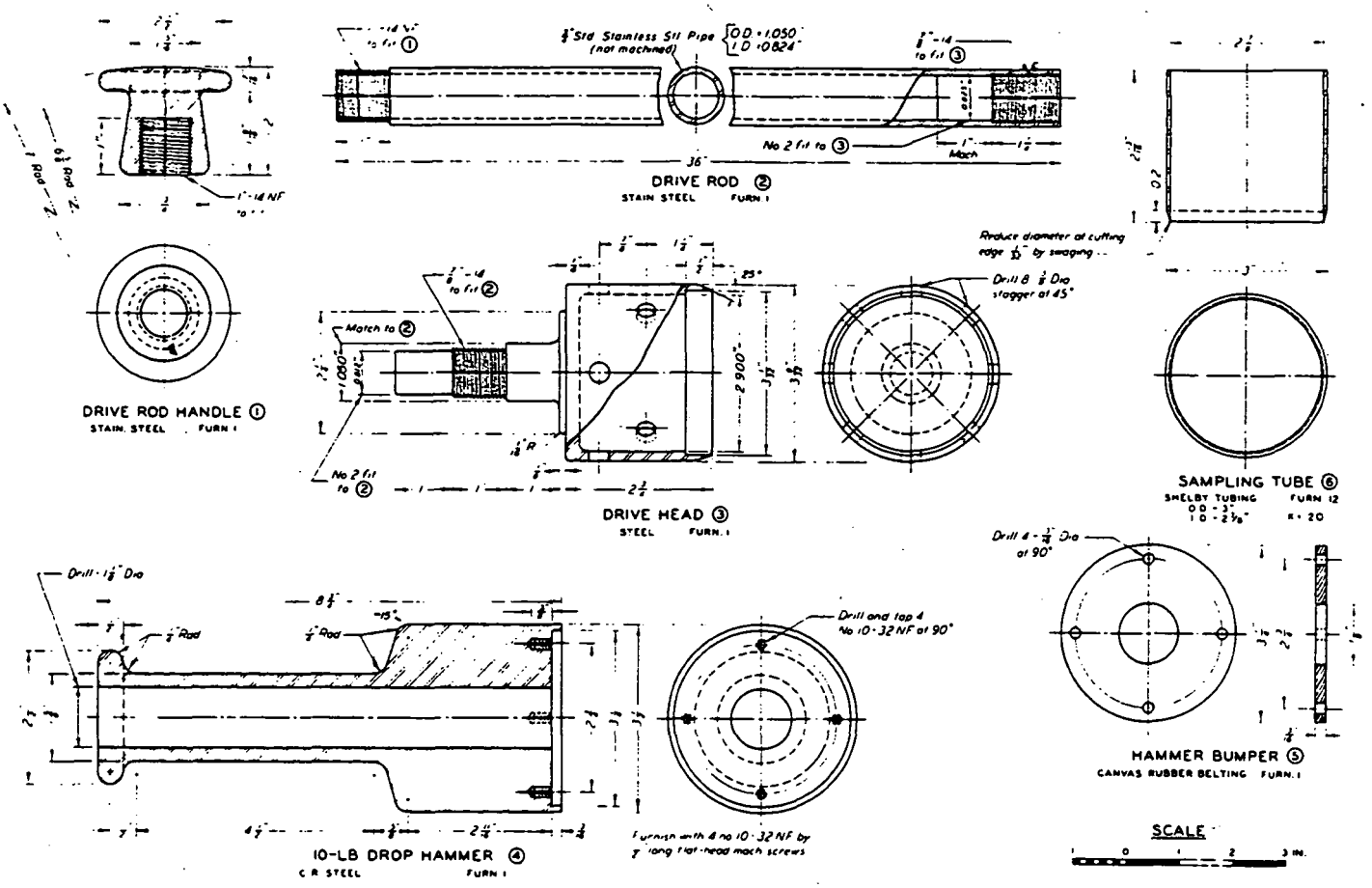

NOTE—Refer to Fig. 2 for metric equivalents.

FIG. 1 Typical Design for a Surface Soil Sampler

D_e = maximum external diameter of the drive sampler, and

D_i = minimum internal diameter of the drive sampler at the cutting edge.

Cylinders of other diameters should conform to these requirements.

4.1.3 When the in-place density is to be used as a basis for acceptance of compacted fill, the cylinders shall be as large as practical to minimize the affects of errors and shall in no case be smaller than 0.025 ft^3 (710 cm^3). This will require cylinders larger than those shown in Figs. 1 and 2.

4.2 *Drive Head*—The typical details of the drive heads and appurtenances are shown in Figs. 1 and 2. The drive head for use at or near the surface has a sliding weight for driving the cylinder. The cylinder to be used at greater depths is driven with a hammer or other means. For sampling below shallow depths, extensions may be added to the drive rod as required to reach the layer to be sampled.

4.3 *Straightedge,* steel, approximately ⅛ by 1½ by 12 in. with one edge sharpened at approximately a 45° angle for trimming the ends of the sample flush with the cylinder.

4.4 *Auger*—An Iwan or similar type auger for digging below shallow depths.

4.5 *Shovel*—Any one of several types of shovels or spades is satisfactory in shallow sampling for digging the cylinders out after they have been driven into the soil.

4.6 *Balances*—A balance or scale of at least 1-kg capacity accurate to 1.0-g and a balance of 500-g capacity accurate to 0.1-g are required for the cylinders shown in Figs. 1 and 2. Larger cylinders will require a balance of 20-kg capacity accurate to 0.1 %.

4.7 *Drying Equipment*—Equipment and oven to comply with Method D 2216. Other drying equipment may be used for rapid evaluation of moisture content if specified (see 7.2).

4.8 *Miscellaneous Equipment*—Brushes, sledgehammers, plastic bags, metal cans with lids, or other suitable containers for retaining the drive cylinder and sample until determination of mass and drying, spoons, inside/outside vernier caliper, or the equivalent accurate to 0.01 in. (0.0025 mm) for calibration, gloves, and safety glasses.

5. Calibration

5.1 Before testing begins and periodically thereafter, or when damage is suspected, check the cutting edge of the drive cylinders (dulled or damaged cylinders may be resharpened and reswaged or discarded).

5.1.1 Before testing and periodically thereafter, determine the mass and volume of each cylinder. Determine and record the mass accurately to the nearest 1 g. Determine the volume of each cylinder by measuring the height and the swaged-end

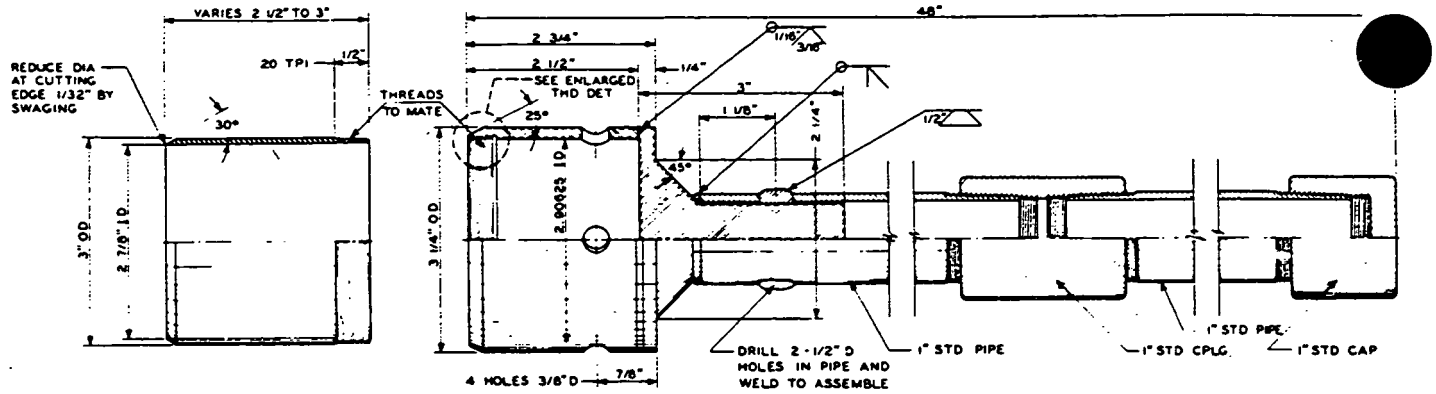

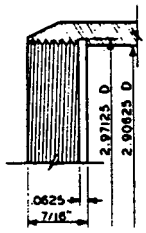

ENLARGED
THD DET

Metric Equivalents for Figs. 1 and 2

NOTE—All tolerances are nominal. Machine to fit as required.

in.	mm	in.	mm	in.	mm	in.	mm
1/32	0.794	1/4	19.050	1 9/16	39.688	2.90625	73.81875
0.0625	1.5875	0.812	20.625	1 5/8	41.275	2.97125	75.46975
1/16	1.588	0.824	20.930	1 3/4	44.450	3	76.200
1/8	3.175	0.825	20.955	2	50.800	3 1/32	76.994
3/16	4.762	7/8	22.225	2 1/4	57.150	3 1/4	82.550
0.2	5.080	1	25.400	2 1/2	63.500	3 9/32	83.344
1/4	6.350	1.050	26.670	2 11/16	68.262	6 5/8	168.175
3/8	9.525	1 1/8	28.575	2 3/4	69.850	7	177.800
7/16	11.112	1 1/4	31.750	2 13/16	70.638	8 3/4	222.250
1/2	12.700	1 5/16	33.338	2 7/8	73.025	36	914.400
5/8	15.875	1 1/2	38.100	2.900	73.660	48	1219.200

FIG. 2 Typical Design for a Soil Sampler for Use Below Surface

diameter at four equally spaced points to 0.01 in. (0.254 mm) and average the respective dimensions. Calculate and record the volume to the nearest 0.01 in.^{3} (0.16 mm^3).

5.2 Permanently identify each cylinder by a number or symbol traceable to the calibration data. It may be desirable in some cases to show the mass and volume on the cylinder along with the identification.

6. Sampling

6.1 *Sampling at or Near the Surface:*

6.1.1 Brush all loose particles from the surface. For near-surface sampling (not more than 36 in. (1 m) in depth), sample through a hole bored with an auger or dug by a shovel from which loosened material has been removed. Obtain a fairly level surface before any cylinder is driven. Depending on the soil texture and moisture, the surface may be prepared utilizing a bulldozer blade or other heavy equipment blades provided the sample area and vicinity are not deformed, compressed, torn, or otherwise disturbed.

6.1.2 Assemble the cylinder and drive head with the sharpened edge on the surface to be sampled. Drive the cylinder by raising the drop hammer and allowing it to fall. Hold the drive rod in a steady and vertical position, keeping the drive head in contact with the cylinder. Continue driving until the top of the cylinder is approximately ½ in. (13 mm) below the original surface. Overdriving may result in deforming or compressing the sample and may provide erroneous results. Care should be taken to prevent overdriving, particularly when sampling below the surface. If overdriving occurs or is suspected, the sample should be discarded and the soil resampled. Remove the drive head and dig the cylinder from the ground with a shovel, digging the soil from

000315

around the sides of the cylinder and undercutting several inches below the bottom of the cylinder before lifting the cylinder out. When sampling near, but below, the surface, use the same procedure, but more soil will necessarily have to be dug from around the sides of the cylinder to properly undercut the cylinder.

6.1.3 After the cylinder has been removed from the ground, trim any excess soil from the sides of the cylinder. Using the straightedge, trim the ends of the sample flush and plane with the ends of the cylinder. A satisfactory sample is composed of relatively undisturbed soil representative of the soil in place and shall not contain rocks, roots, or other foreign material. If the cylinder is not full or is not representative, discard the sample and take another sample. If the cylinder is deformed or otherwise damaged while driving it into or removing it from the ground, discard the sample and repair or replace the cylinder. Immediately determine the mass of the sample and determine the water content or place the drive cylinder and sample in a container which will prevent soil or water loss until mass and water determinations can be made.

6.2 *Sampling Below the Surface:*

6.2.1 Drill a hole with an auger to the elevation of the layer to be sampled. Clean the bottom of the hole of auger-loosened material as well as possible with a cleaning auger or other suitable tool leaving the bottom of the hole fairly level.

6.2.2 Assemble the cylinder to the drive head (and extensions if needed) and lower the cylinder into the hole, placing it firmly on the layer to be sampled. Drive the cylinder into the soil by blows of a hammer on the top of the drive rod. Continue driving until the top of the cylinder is approximately 1 in. (25 mm) below the surface being sampled. Care must be taken not to overdrive since there is only approximately a 2-in. (50-mm) clearance in the drive head. Break the sample from the ground by moving the rod of the sampler back and forth. Remove the assembly from the hole and carefully remove the cylinder from the drive head. In cases where the sample breaks from the ground slightly above the cutting edge, the sample may be forced back through the cylinder by carefully pressing the top of the sample against a flat surface. Trim any excess soil from the cylinder using the straightedge until the sample is flush and plane with the ends of the cylinder. If the cylinder is deformed or damaged, or if the sample is broken, disturbed, or gouged by rocks during driving, discard the sample. Immediately determine the mass of a satisfactory sample and determine the water content or place the drive cylinder and sampler in a container which will prevent soil or moisture loss until mass and water content determinations can be made.

7. Procedure

7.1 Determine the mass of the drive cylinder and soil sample to the nearest 1 g and record.

7.2 Remove the soil from the cylinder. Obtain a representative specimen for water content determination, or use the entire sample. Specimens for determining water content are to be as large as practical but in no case smaller than 100 g and selected in such a way so as to represent all the material from the cylinder. Determine the water content of the soil in accordance with Method D 2216. Rapid methods of water content determination may be used when specified. Rapid methods are generally less accurate than Method D 2216 and should only be used when their accuracy is considered sufficient for the testing purpose.

8. Calculation

8.1 The in-place dry density of the soil is expressed as the mass of the dry soil divided by the volume of soil, and is usually reported in pounds per cubic foot or kilograms per cubic metre.

8.2 Calculate the dry mass of the drive-cylinder sample, M_3, in grams, as follows:

$$M_3 = [(M_1 - M_2)/(100 + w)] \times 100 \quad (2)$$

where:

M_1 = mass of the cylinder and wet soil sample, g,
M_2 = mass of the cylinder, g, and
w = water content, %, dry mass basis.

8.3 Calculate the dry density, ρ_d, of the drive-cylinder sample in lb/ft^3 as follows:

$$\rho_d = (M_3/V)\,(3.810) \quad (3)$$

where:

V = volume of the drive cylinder, in^3 (to the nearest 0.01 in^3)

NOTE 2—It may be desired to express the in-place density as a percentage of some other density, for example, the laboratory maximum density, determined in accordance with Test Methods D 698. This relation can be determined by dividing the in-place density by the maximum density and multiplying by 100.

9. Report

9.1 Report the following information:

9.1.1 Location,

9.1.2 Depth below ground surface or elevation of surface, or both,

9.1.3 Dry density,

9.1.4 Water content,

9.1.5 Dimensions and volume of the sampler,

9.1.6 Visual description of the soil sample, and

9.1.7 Comments on soil sample disturbance.

10. Precision and Bias

10.1 The precision and bias of this test method for measuring the density of soils in place by the drive-cylinder method has not been determined. No available methods provide absolute values for the density of the soil in-place against which this test method can be compared. The variability of the soil and the destructive nature of the test method do not allow for the repetitive duplication of test results required to obtain a meaningful statistical evaluation. Precision is a function of the care exercised in performing the steps of the test method given, with attention to systematic repetition of the procedure and equipment maintenance.

The American Society for Testing and Materials takes no position respecting the validity of any patent rights asserted in connection with any item mentioned in this standard. Users of this standard are expressly advised that determination of the validity of any such patent rights, and the risk of infringement of such rights, are entirely their own responsibility.

This standard is subject to revision at any time by the responsible technical committee and must be reviewed every five years and if not revised, either reapproved or withdrawn. Your comments are invited either for revision of this standard or for additional standards and should be addressed to ASTM Headquarters. Your comments will receive careful consideration at a meeting of the responsible technical committee, which you may attend. If you feel that your comments have not received a fair hearing you should make your views known to the ASTM Committee on Standards, 1916 Race St., Philadelphia, PA 19103.

Designation: D 3441 - 86

Standard Test Method for Deep, Quasi-Static, Cone and Friction-Cone Penetration Tests of Soil[1]

This standard is issued under the fixed designation D 3441; the number immediately following the designation indicates the year of original adoption or, in the case of revision, the year of last revision. A number in parentheses indicates the year of last reapproval. A superscript epsilon (ε) indicates an editorial change since the last revision or reapproval.

This standard has been approved for use by agencies of the Department of Defense. Consult the DoD Index of Specifications and Standards for the specific year of issue which has been adopted by the Department of Defense.

1. Scope

1.1 This test method covers the determination of end bearing and side friction, the components of penetration resistance which are developed during the steady slow penetration of a pointed rod into soil. This method is sometimes referred to as the "Dutch Cone Test," or "Cone Penetration Test" and is often abbreviated as the "CPT."

1.2 This test method includes the use of both cone and friction-cone penetrometers, of both the mechanical and electric types. It does not include data interpretation. It also includes the penetrometer aspects of piezocone soundings, but does not include the details of piezometer construction, location, measurement, or data interpretation.

NOTE 1—The European Standard for the CPT uses a tip of right cylindrical shape as shown in Fig. 3, as their reference test against which other CPTs may be compared.

1.3 Mechanical penetrometers of the type described in this method operate incrementally, using a telescoping penetrometer tip, resulting in no movement of the push rods during the measurement of the resistance components. Design constraints for mechanical penetrometers preclude a complete separation of the end-bearing and side-friction components. Electric penetrometers are advanced continuously and permit separate measurement of both components. Differences in shape and method of advance between cone penetrometer tips may result in significant differences in one or both resistance components.

1.4 *This standard may involve hazardous materials, operations, and equipment. This standard does not purport to address all of the safety problems associated with its use. It is the responsibility of the user of this standard to establish appropriate safety and health practices and determine the applicability of regulatory limitations prior to use.*

2. Definitions

2.1 *cone*—the cone-shaped point of the penetrometer tip, upon which the end-bearing resistance develops.

2.2 *cone penetrometer*—an instrument in the form of a cylindrical rod with a conical point designed for penetrating soil and soft rock and for measuring the end-bearing component of penetration resistance.

2.3 *cone resistance or end-bearing resistance, q_c*—the resistance to penetration developed by the cone, equal to the vertical force applied to the cone divided by its horizontally projected area.

2.4 *cone sounding*—the entire series of penetration tests performed at one location when using a cone penetrometer.

2.5 *electric penetrometer*—a penetrometer that uses electric-force transducers built into a nontelescoping penetrometer tip for measuring, within the tip, the component(s) of penetration resistance.

2.6 *friction-cone penetrometer*—a cone penetrometer with the additional capability of measuring the local side friction component of penetration resistance.

2.7 *friction-cone sounding*—the entire series of penetration tests performed at one location when using a friction-cone penetrometer.

2.8 *friction ratio, R_f*—the ratio of friction resistance to cone resistance, f_s/q_c, expressed in percent.

2.9 *friction resistance, f_s*—the resistance to penetration developed by the friction sleeve, equal to the vertical force applied to the sleeve divided by its surface area. This resistance consists of the sum of friction and adhesion.

2.10 *friction sleeve*—a section of the penetrometer tip upon which the local side-friction resistance develops.

2.11 *inner rods*—rods that slide inside the push rods to extend the tip of a mechanical penetrometer.

2.12 *mechanical penetrometer*—a penetrometer that uses a set of inner rods to operate a telescoping penetrometer tip and to transmit the component(s) of penetration resistance to the surface for measurement.

2.13 *penetrometer tip*—the end section of the penetrometer, which comprises the active elements that sense the soil resistance, the cone, and in the case of the friction-cone penetrometer, the friction sleeve.

2.13.1 *Discussion*—The addition of a piezometer to the electric penetrometer tip permits the measurement of pore water pressure during and after stopping tip penetration. A penetrometer including a piezometer is known as a piezocone penetrometer, or just piezocone.

2.14 *piezocone sounding*—the entire series of penetration tests performed at one location when using a piezocone penetrometer.

2.15 *push rods*—the thick-walled tubes, or other suitable rods, used for advancing the penetrometer tip to the required test depth.

3. Significance and Use

3.1 This test method supplies data on the engineering

[1] This test method is under the jurisdiction of ASTM Committee D-18 on Soil and Rock and is the direct responsibility of Subcommittee D18.02 on Sampling and Related Field Testing for Soil Investigations.

Current edition approved Oct. 31, 1986. Published December 1986. Originally published as D 3441 - 75 T. Last previous edition D 3441 - 79.

properties of soil intended to help with the design and construction of earthworks and the foundations for structures.

3.2 This test method tests the soil in place and does not obtain soil samples. The interpretation of the results from this method requires knowledge of the types of soil penetrated. Engineers usually obtain this soil information from parallel borings and soil sampling methods, but prior information or experience may preclude the need for borings.

3.3 Engineers often correlate the results of tests by this test method with laboratory or other types of field tests, or directly with performance. The accuracy of such correlations will vary with the type of soil involved. Engineers usually rely on local experience to judge this accuracy.

3.4 Most engineers with offshore experience have also found this test method suitable for offshore use.

4. Apparatus

4.1 *General:*

4.1.1 *Cone*—The cone shall have a 60° (±5°) point angle and a base diameter of 1.406 ± 0.016 in. (35.7 ± 0.4 mm), resulting in a projected area of 1.55 in.^{2} (10 cm^2). The point of the cone shall have a radius less than ⅛ in. (3 mm).

NOTE 2—Cone tips with larger end areas may be used to increase measurement sensitivity in weak soils. Experience with electrical tips with end area between 0.78 in.^{2} (5 cm^2) and 3.10 in.^{2} (20 cm^2) has shown that they produce data similar to the 1.55 in.^{2} (10 cm^2) standard provided they maintain the same tip geometry. Cone tip sizes in this range may be used for special circumstances provided the cone tip and friction sleeve (if any) area is noted.

4.1.2 *Friction Sleeve,* having the same outside diameter +0.024 to −0.000 in. (+0.5 to −0.0 mm) as the base diameter of the cone (see 4.1.1). No other part of the penetrometer tip shall project outside the sleeve diameter. The surface area of the sleeve shall be 23.2 in.^{2} (150 cm^2) ±2 %.

4.1.3 *Steel*—The cone and friction sleeve shall be made from steel of a type and hardness suitable to resist wear due to abrasion by soil. The friction sleeve shall have and maintain with use a roughness of 20 µin. (0.5 µm) AA, ±50 %.

4.1.4 *Push Rods*—Made of suitable steel, these rods must have a section adequate to sustain, without buckling, the thrust required to advance the penetrometer tip. They must have an outside diameter not greater than the diameter of the base of the cone for a length of at least 1.3 ft (0.4 m) above the base, or, in the case of the friction-cone penetrometer, at least 1.0 ft (0.3 m) above the top of the friction sleeve. Each push rod must have the same constant inside diameter. They must screw or attach together to bear against each other and form a rigid-jointed string of rods with a continuous, straight axis.

4.1.5 *Inner Rods*—Mechanical penetrometers require a separate set of steel, or other metal alloy, inner rods within the steel push rods. The inner rods must have a constant outside diameter with a roughness, excluding waviness, less than 10 µin. (0.25 µm) AA. They must have the same length as the push rods (±0.004 in. or ±0.1 mm) and a cross section adequate to transmit the cone resistance without buckling or other damage. Clearance between inner rods and push rods shall be between 0.020 and 0.040 in. (0.5 and 1.0 mm). See 6.8.1.

4.1.6 *Measurement Accuracy*—Maintain the th[illegible]ea-suring instrumentation to obtain thrust measurements within ±5 % of the correct values.

NOTE 3—Special, and preferably redundant, instrumentation may be required in the offshore environment to assure this accuracy and the proper operation of all the remote systems involved.

4.2 *Mechanical Penetrometers:*

4.2.1 The sliding mechanism necessary in a mechanical penetrometer tip must allow a downward movement of the cone in relation to the push rods of at least 1.2 in. (30.5 mm).

NOTE 4—At certain combinations of depth and tip resistance(s), the elastic compression of the inner rods may exceed the downward stroke that the thrust machine can apply to the inner rods relative to the push rods. In this case, the tip will not extend and the thrust readings will rise elastically to the end of the machine stroke and then jump abruptly when the thrust machine makes contact with the push rods.

4.2.2 Mechanical penetrometer tip design shall include protection against soil entering the sliding mechanism and affecting the resistance component(s) (see 4.2.3 and Note 5).

4.2.3 *Cone Penetrometer*—Figure 1 shows the design and action of one mechanical cone penetrometer tip. A mantle of reduced diameter is attached above the cone to minimize possible soil contamination of the sliding mechanism.

NOTE 5—An unknown amount of side friction may develop along this mantle and be included in the cone resistance.

4.2.4 *Friction-Cone Penetrometer*—Figure 2 sh[illegible] the design and action of one telescoping mechanical [illegible]n-cone penetrometer tip. The lower part of the tip, incl[illegible]g a mantle to which the cone attaches, advances first until the flange engages the friction sleeve and then both advance.

NOTE 6—The shoulder at the lower end of the friction sleeve encounters end-bearing resistance. In sands as much as two thirds of the sleeve resistance may consist of bearing on this shoulder. Ignore this effect in soft to medium clays.

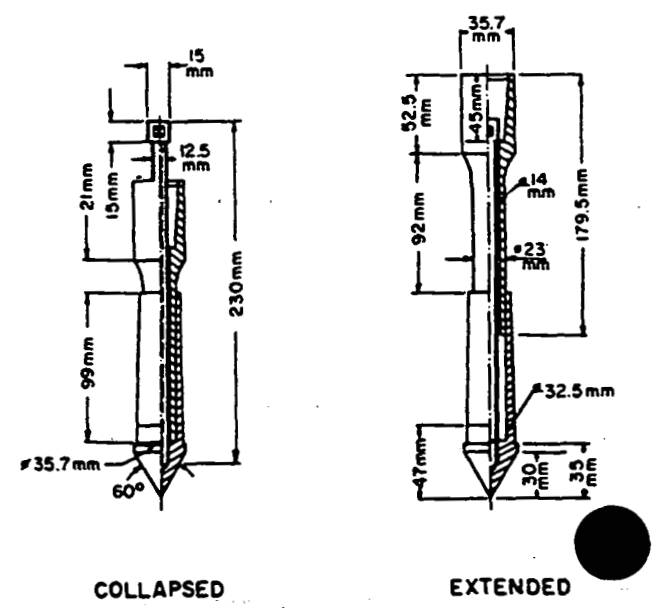

FIG. 1 Example of a Mechanical Cone Penetrometer Tip (Dutch Mantle Cone)

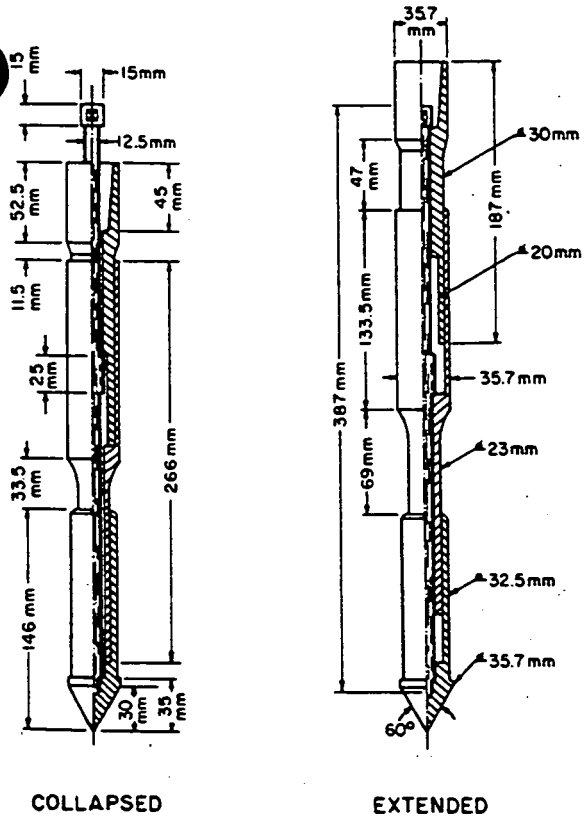

FIG. 2 Example of a Mechanical Friction-Cone Penetrometer Tip (Begemann Friction-Cone)

4.2.5 *Measuring Equipment*—Measure the penetration resistance(s) at the surface by a suitable device such as a hydraulic or electric load cell or proving ring.

4.3 *Electric Penetrometers:*

4.3.1 *Cone Penetrometer*—Figure 3 shows one design for an electric-cone penetrometer tip. The cone resistance is measured by means of a force transducer attached to the cone. An electric cable or other suitable system transmits the transducer signals to a data recording system. Electric-cone penetrometers shall permit continuous advance and recording over each push rod-length interval.

4.3.2 *Friction-Cone Penetrometer*—The bottom of the friction sleeve shall not be more than 0.4 in. (10 mm) above the base of the cone. The same requirements as 4.3.1 apply. Figure 4 shows one design for an electric friction-cone penetrometer tip.

4.3.3 *Other Penetrometers*—Electric penetrometers may include other transducer measurements as well as, or instead of, the friction sleeve measurement. Common ones are inclinometers to assist with the alignment control of the tip (see 6.3) and piezometers to provide additional data on soil stratigraphy and behavior.

4.4 *Thrust Machine*—This machine shall provide a continuous stroke, preferably over a distance greater than one push rod length. The machine must advance the penetrometer tip at a constant rate while the magnitude of the thrust required fluctuates (see 5.1.2).

NOTE 7—Deep penetration soundings usually require a thrust capability of at least 5 tons (45 kN). Most modern machines use hydraulic pistons with 10 to 20-ton (90 to 180-kN) thrust capability.

4.5 *Reaction Equipment*—The proper performance of the static-thrust machine requires a stable, static reaction.

NOTE 8—The type of reaction provided may affect the penetrometer resistance(s) measured, particularly in the surface or near-surface layers.

5. Procedure

5.1 *General:*

5.1.1 Set up the thrust machine for a thrust direction as near vertical as practical.

5.1.2 *Rate of Penetration*—Maintain a rate of depth penetration of 2 to 4 ft/min (10 to 20 mm/s) ±25 % when obtaining resistance data. Other rates of penetration may be used between tests.

NOTE 9—The rate of 2 ft/min (10 mm/s) provides the time the operator needs to read properly the resistance values when using the mechanical friction-cone penetrometer. The rate of 4 ft/min (20 mm/s) is suitable for the single resistance reading required when using the

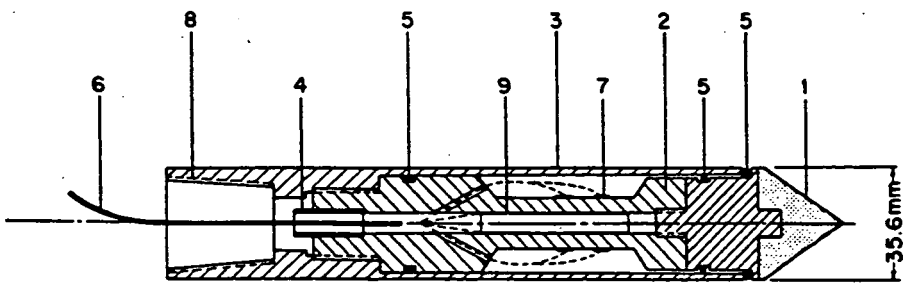

1 Conical point (10 cm²)
2 Load cell
3 Protective mantle
4 Waterproof bushing
5 O-rings
6 Cable
7 Strain gages
8 Connection with rods
9 Inclinometer

FIG. 3 Electric-Cone Penetrometer Tip

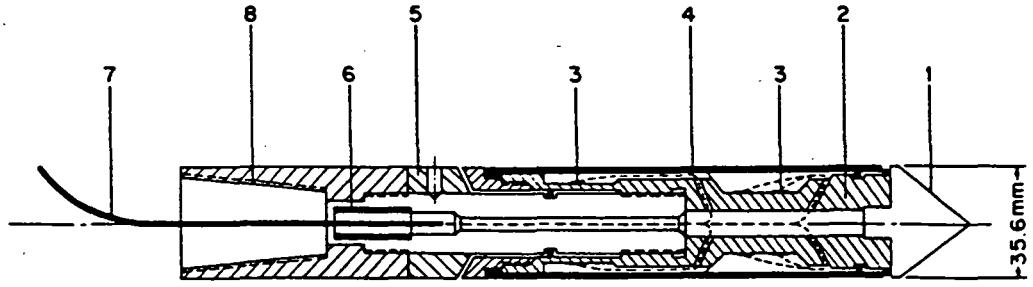

1 Conical point (10 cm²)
2 Load cell
3 Strain gages
4 Friction sleeve (150 cm²)
5 Adjustment ring
6 Waterproof bushing
7 Cable
8 Connection with rods

FIG. 4 Electric Friction-Cone Penetrometer Tip

mechanical cone penetrometer and provides for the efficient operation of electric penetrometers. The European standard requires 4 ft/min (20 mm/s).

NOTE 10—Rates of penetration either slower or faster than the standard rate may be used for special circumstances, such as pore pressure measurements. This is permissible provided the rate actually used and the reason for the deviation is noted on the test record.

NOTE 11—Pore pressures generated ahead of and around the penetrating cone or friction cone penetrometer tip can have an important effect on the q_c and f_s values measured. Piezocone tips with simultaneous pore pressure measurement capability have proven useful to help evaluate such effects and to provide additional data about the stratigraphy and engineering properties of the soils penetrated.

5.2 *Mechanical Penetrometers:*

5.2.1 *Cone Penetrometer*—(*1*) Advance penetrometer tip to the required test depth by applying sufficient thrust on the push rods; and (*2*) Apply sufficient thrust on the inner rods to extend the penetrometer tip (see Fig. 1). Obtain the cone resistance at a specific point (see 5.2.3) during the downward movement of the inner rods relative to the stationary push rods. Repeat step *(1)*. Apply sufficient thrust on the push rods to collapse the extended tip and advance it to a new test depth. By continually repeating this two-step cycle, obtain cone resistance data at increments of depth. This increment shall not ordinarily exceed 8 in. (203 mm).

5.2.2 *Friction-Cone Penetrometer*—Use this penetrometer as described in 5.2.1 but obtain two resistances during the step *(2)* extension of the tip (see Figs. 2 and 5). First obtain the cone resistance during the initial phase of the extension. When the lower part of the tip engages and pulls down the friction sleeve, obtain a second measurement of the total resistance of the cone plus the sleeve. Subtraction gives the sleeve resistance.

NOTE 12—Because of soil layering, the cone resistance may change during the additional downward movement of the tip required to obtain the friction measurement.

NOTE 13—The soil friction along the sleeve puts an additional overburden load on the soil above the cone and may increase cone resistance above that measured during the initial phase of the tip extension by an unknown, but probably small amount. Ignore this effect.

5.2.3 *Recording Data*—To obtain reproducible cone-resistance test data, or cone and friction-resistance test data when using a friction-cone tip, record only those thrust readings that occur at a well-defined point during the downward movement of the top of the inner rods in relation to the top of the push rods. Because of the elastic compression of inner rods (see Note 4), this point ordinarily should be at not less than 1.0 in. (25 mm) apparent relative movement of the inner rods. When using the friction-cone penetrometer, this point shall be just before the cone engages the friction sleeve.

NOTE 14—Figure 5 shows one example of how the thrust hydraulic load cell can vary during the extension of the friction-c Note the jump in gage pressure when the cone engages the sleeve.

5.2.3.1 Obtain the cone plus friction-resistance reading as soon as possible after the jump so as to minimize the error described in Fig. 5. Unless using continuous recording as in Fig. 5, the operator should not record a cone plus friction resistance if he suspects the cone resistance is changing abruptly or erratically.

5.3 *Electric Penetrometers:*

5.3.1 If using continuous electric cable, prethread it through the push rods.

5.3.2 Record the initial reading(s) with the penetrometer tip hanging freely in air or in water, out of direct sunlight, and after an initial, short penetration, test hole so that the tip temperature is at soil temperature.

5.3.3 Record the cone resistance, or cone resistance and friction resistance, continuously with depth or note them at intervals of depth not exceeding 8 in. (203 mm).

5.3.4 At the end of a sounding, obtain a final set of readings as in 5.3.2 and check them against the initial set. Discard the sounding, and repair or replace the tip if this check is not satisfactory for the accuracy desired for the resistance component(s).

6. Special Techniques and Precautions

6.1 *Reduction of Friction Along Push Rods*—The purpose of this friction reduction is to increase the penet depth capability, and not to reduce any differences l n resistance components determined by mechanical and electric tips as noted in 1.3. To accomplish the friction reduction, introduce a special rod with an enlarged diameter or

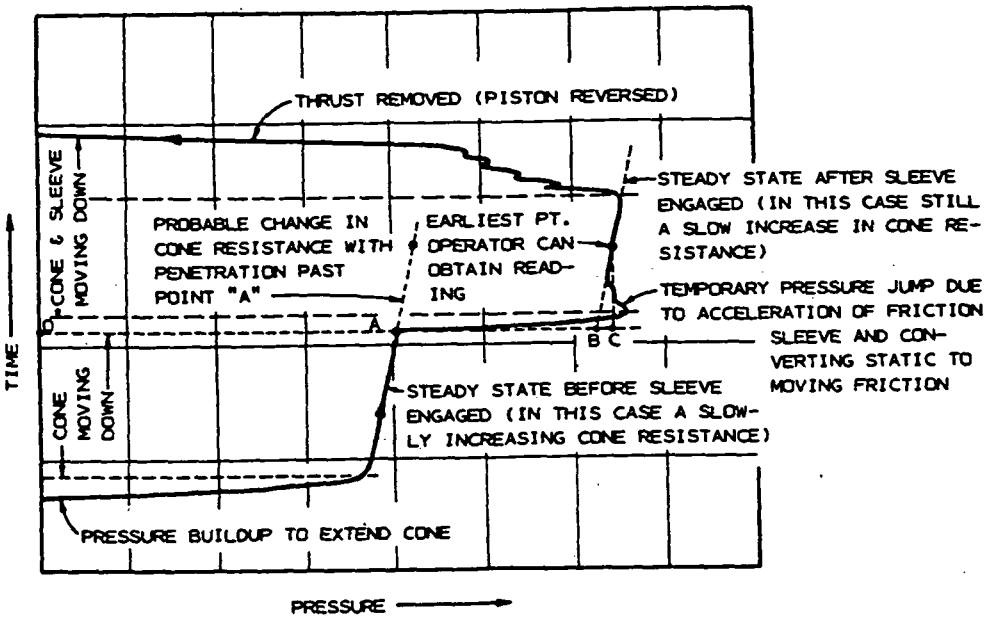

NOTE—"o-a" represents the correct cone resistance reading just before the pressure jump associated with engaging the friction sleeve during the continuing downward extension of the tip. "a-b" is the correct friction resistance if the friction sleeve could be engaged instantaneously and the cone plus friction resistance read instantaneously. However, the operator cannot read a pressure gage dial until it steadies, such as at point "c." By this forced wait, the operator has introduced a friction resistance error of "b-c." The operator must read the gage as soon as possible after the jump to minimize this error. Erratic or abrupt changes in cone resistance may make this error unacceptable.

FIG. 5 Annotated Chart Record of the Pressure Changes in the Hydraulic Load Cell Measuring Thrust on Top of the Inner Rods During an Example Extension of the Mechanical Friction-Cone Penetrometer Tip

pecial projections, called a "friction reducer," into the string of push rods or between the push rods and the tip. Another allowable method to reduce friction is to use push rods with a diameter less than that of the tip. In accordance with 4.1.4, any such projections or changes in diameter must begin no closer than 1.0 ft (0.3 m) from the base of the cone or the top of the friction sleeve when using cones with the standard 4.1.1 diameter. For other cones (see Note 2) use no closer than 8 diameters.

NOTE 15—Non-mechanical techniques to reduce friction, such as the use of drilling mud above the tip, are also allowable.

6.2 *Prevention of Rod Bending Above Surface*—Use a tubular rod guide, at the base of the thrust machine, of sufficient length to prevent significant bending of the push rods between the machine and the ground surface.

NOTE 16—Special situations, such as when working through water, will require a special system of casing support to restrict adequately the buckling of the push rods.

6.3 *Drift of Tip*—For penetration depths exceeding about 40 ft (12 m), the tip will probably drift away from a vertical alignment. Occasionally, serious drifting occurs, even at less depth. Reduce drifting by using push rods that are initially straight and by making sure that the initial cone penetration into soil does not involve unwanted, initial lateral thrust. Passing through or alongside an obstruction such as boulders, soil concretions, thin rock layers, or inclined dense layers may deflect the tip and induce drifting. Note any indications of encountering such obstructions and be alert for possible subsequent improper tip operation as a sign of serious drifting.

NOTE 17—Electric penetrometer tips may also incorporate an inclinometer to monitor drift and provide a warning when it becomes excessive.

6.4 *Wear of Tip*—Penetration into abrasive soils eventually wears down or scours the penetrometer tip. Discard tips, or parts thereof, whose wear changes their geometry or surface roughness so they no longer meet the requirements of 4.1. Permit minor scratches.

6.5 *Distance Between Cone and Friction Sleeve*—The friction resistance of the sleeve applies to the soil at some distance above the soil in which the cone resistance was obtained at the same time. When comparing these resistances for the soil at a specified depth, for example when computing friction ratios or when plotting these data on graphs, take proper account of the vertical distance between the base of the cone and the midheight of the friction sleeve.

6.6 *Interruptions*—The engineer may have to interrupt the normal advance of a static penetration test for purposes such as removing the penetrometer and drilling through layers or obstructions too strong to penetrate statically. If the penetrometer is designed to be driven dynamically without damage to its subsequent static performance (those illustrated herein in Figs. 1 to 4 are not so designed), the engineer may drive past such layers or obstructions. Delays of over 10 min due to personnel or equipment problems shall be considered an interruption. Continuing the static penetration test after an interruption is permitted provided this additional testing remains in conformance with this standard. Obtain further resistance component data only after the tip passes through the engineer's estimate of the disturbed zone resulting from the nature and depth of the interruption. As an alternative, readings may be continued without first

making the additional tip penetration and the disturbed zone evaluated from these data. Then disregard data within the disturbed zone.

NOTE 18—Interruption of the piezocone sounding after a push allows the engineer to examine the dissipation of positive or negative excess pore water pressure.

6.7 *Below or Adjacent to Borings*—A cone or friction-cone sounding shall not be performed any closer than 25 boring diameters from an existing, unbackfilled, uncased boring hole. When performed at the bottom of a boring, the engineer should estimate the depth below the boring of the disturbed zone and disregard penetration test data in this zone. The depth may vary from one to five diameters. Where the engineer does not have sufficient experience with this variable a depth of at least three boring diameters should be used.

6.8 *Mechanical Penetrometers:*

6.8.1 *Inner Rod Friction*—Soil particles and corrosion can increase the friction between inner rods and push rods, possibly resulting in significant errors in the measurement of the resistance component(s). Clean and lubricate the inner rods.

6.8.2 *Weight of Inner Rods*—For improved accuracy at low values of cone resistance, correct the thrust data to include the accumulated weight of the inner rods from the tip to the topmost rod.

6.8.3 *Jamming*—Soil particles between sliding surfaces or bending of the tip may jam the mechanism during the many extensions and collapses of the telescoping mechanical tip. Stop the sounding as soon as uncorrectable jamming occurs.

6.9 *Electric Penetrometers:*

6.9.1 *Water Seal*—Provide adequate waterproofing for the electric transducer. Make periodic checks to assure that no water has passed the seals.

NOTE 19—Some electric tip sleeve designs are not compensated for hydrostatic end area effects and require a calibration correction. Determining the net end area of the cone under hydrostatic pressure also requires a hydrostatic calibration measurement. The tip manufacturer can usually supply these calibration correction constants. Their importance increases as the soil being tested becomes weaker.

7. Report

7.1 *Graph of Cone Resistance, q_c*—Every report of a cone or friction-cone sounding shall include a graph of the variation of cone resistance (in units of tons or kPa) with depth (in feet or metres). Successive cone-resistance test values from the mechanical cone and friction-cone penetrometers, usually determined at equal increments of depth and plotted at the depth corresponding to the depth of the measurement, may be connected with straight lines as an approximation for a continuous graph.

7.2 *Friction-Cone Penetrometer:*

7.2.1 *Graph of Friction Resistance, f_s*—In addition to the graph of cone resistance (7.1) the report may include an adjacent or superposed graph of friction resistance or friction ratio, or both, with depth. Use the same depth scale as in 7.1 (see 6.5).

7.2.2 *Graph of Friction Ratio, R_f*—If the report includes soil descriptions estimated from the friction-cone penetrometer data, include a graph of the variation of friction ratio with depth. Place this graph adjacent to the graph for cone resistance, using the same depth scale (see 6.5).

7.3 *Piezocone Penetrometer*—In addition to the 7.1 and 7.2 report requirements, a piezocone sounding shall include a parallel graph, to the same depth scale, of measured pore water pressure during the penetration versus depth. Excess pore water pressure versus time plots may also be constructed at those depths where the piezocone sounding is interrupted (see Note 1).

7.4 *General*—The operator shall record his name, the name and location of the job, date of sounding, sounding number, location coordinates, and soil and water surface elevations (if available). The report shall also include a note as to the type of penetrometer tip used, the type of thrust machine, tip and thrust calibration information, or both, any zero-drift noted, the method used to provide the reaction force, if a friction reducer was used, the method of tip advancement, the method of recording, the condition of the rods and tip after withdrawal, and any special difficulties or other observations concerning the performance of the equipment.

7.5 *Deviations from Standard*—The report shall state that the test procedures were in accordance with this Test Method D 3441. Describe completely any deviations from this test method.

8. Precision and Bias

8.1 Because of the many variables involved and the lack of a superior standard, engineers have no direct data to determine the bias of this method. Judging from its observed reproducibility in approximately uniform soil deposits, plus the q_c and f_s measurement effects of special equipment and operator care, persons familiar with this method estimate its precision as follows:

8.1.1 *Mechanical Tips*—Standard deviation of 10 % in q_c and 20 % in f_s.

8.1.2 *Electric Tips*—Standard deviation of 5 % in q_c and 10 % in f_s.

NOTE 20—These data may not match similar data from mechanical tips (see 1.3).

The American Society for Testing and Materials takes no position respecting the validity of any patent rights asserted in connection with any item mentioned in this standard. Users of this standard are expressly advised that determination of the validity of any such patent rights, and the risk of infringement of such rights, are entirely their own responsibility.

This standard is subject to revision at any time by the responsible technical committee and must be reviewed every five years and if not revised, either reapproved or withdrawn. Your comments are invited either for revision of this standard or for additional standards and should be addressed to ASTM Headquarters. Your comments will receive careful consideration at a meeting of the responsible technical committee, which you may attend. If you feel that your comments have not received a fair hearing you should make your views known to the ASTM Committee on Standards, 1916 Race St., Philadelphia, PA 19103.

Designation: D 4318 – 84

Standard Test Method for Liquid Limit, Plastic Limit, and Plasticity Index of Soils[1]

This standard is issued under the fixed designation D 4318; the number immediately following the designation indicates the year of original adoption or, in the case of revision, the year of last revision. A number in parentheses indicates the year of last reapproval. A superscript epsilon (ε) indicates an editorial change since the last revision or reapproval.

This standard has been approved for use by agencies of the Department of Defense. Consult the DoD Index of Specifications and Standards for the specific year of issue which has been adopted by the Department of Defense.

1. Scope

1.1 This test method covers the determination of the liquid limit, plastic limit, and the plasticity index of soils as defined in Section 3.

1.1.1 Two procedures for preparing test specimens and two procedures for performing the liquid limit are provided as follows:

A Multipoint test using a wet preparation procedure, described in Sections 10.1, 11, and 12.

B Multipoint test using a dry preparation procedure, described in Sections 10.2, 11, and 12.

C One-point test using a wet preparation procedure, described in Sections 13, 14, and 15.

D One-point test using a dry preparation procedure, described in Sections 13, 14, and 15.

The procedure to be used shall be specified by the requesting authority. If no procedure is specified, Procedure A shall be used.

NOTE 1—Prior to the adoption of this test method, a curved grooving tool was specified as part of the apparatus for performing the liquid limit test. The curved tool is not considered to be as accurate as the flat tool described in 6.2 since it does not control the depth of the soil in the liquid limit cup. However, there are some data which indicate that typically the liquid limit is slightly increased when the flat tool is used instead of the curved tool.

1.1.2 The plastic limit test procedure is described in Sections 16, 17, and 18. The plastic limit test is performed on material prepared for the liquid limit test. In effect, there are two procedures for preparing test specimens for the plastic limit test.

1.1.3 The procedure for calculating the plasticity index is given in Section 19.

1.2 The liquid limit and plastic limit of soils (along with the shrinkage limit) are often collectively referred to as the Atterberg limits in recognition of their formation by Swedish soil scientist, A. Atterberg. These limits distinguish the boundaries of the several consistency states of plastic soils.

1.3 As used in this test method, soil is any natural aggregation of mineral or organic materials, mixtures of such materials, or artificial mixtures of aggregates and natural mineral and organic particles.

1.4 The multipoint liquid limit procedure is somewhat more time consuming than the one-point procedure when both are performed by experienced operators. However, the one-point procedure requires the operator to judge when the test specimen is approximately at its liquid limit. In cases where this is not done reliably, the multipoint procedure is as fast as the one-point procedure and provides additional precision due to the information obtained from additional trials. It is particularly recommended that the multipoint procedure be used by inexperienced operators.

1.5 The correlations on which the calculations of the one-point procedure are based may not be valid for certain soils, such as organic soils or soils from a marine environment. The liquid limit of these soils should therefore be determined by the multipoint procedure (Procedure A).

1.6 The liquid and plastic limits of many soils that have been allowed to dry before testing may be considerably different from values obtained on undried samples. If the liquid and plastic limits of soils are used to correlate or estimate the engineering behavior of soils in their natural moist state, samples should not be permitted to dry before testing unless data on dried samples are specifically desired.

1.7 The composition and concentration of soluble salts in a soil affect the values of the liquid and plastic limits as well as the water content values of soils (see Method D 2216). Special consideration should therefore be given to soils from a marine environment or other sources where high soluble salt concentrations may be present. The degree to which the salts present in these soils are diluted or concentrated must be given consideration if meaningful results are to be obtained.

1.8 Since the tests described herein are performed only on that portion of a soil which passes the 425-μm (No. 40) sieve, the relative contribution of this portion of the soil to the properties of the sample as a whole must be considered when using these tests to evaluate the properties of a soil.

1.9 The values stated in acceptable metric units are to be regarded as the standard. The values given in parentheses are for information only.

1.10 *This standard may involve hazardous materials, operations, and equipment. This standard does not purport to address all of the safety problems associated with its use. It is the responsibility of whoever uses this standard to consult and establish appropriate safety and health practices and determine the applicability of regulatory limitations prior to use.*

---

[1] This test method is under the jurisdiction of ASTM Committee D-18 on Soil and Rock and is the direct responsibility of Subcommittee D18.03 on Texture, Plasticity, and Density Characteristics of Soils.

Current edition approved Oct. 26, 1984. Published December 1984. Originally published as D 4318 – 83. Last previous edition D 4318 – 83ε[1].

2. Referenced Documents

2.1 *ASTM Standards:*

C 702 Methods for Reducing Field Samples of Aggregate to Testing Size[2]

D 75 Practice for Sampling Aggregates[4]

D 420 Practice for Investigating and Sampling Soil and Rock for Engineering Purposes[4]

D 653 Terminology Relating to Soil, Rock, and Contained Fluids[4]

D 1241 Specification for Materials for Soil-Aggregate Subbase, Base, and Surface Courses[4]

D 2216 Method for Laboratory Determination of Water (Moisture) Content of Soil, Rock, and Soil-Aggregate Mixtures[4]

D 2240 Test Method for Rubber Property—Durometer Hardness[5]

D 2487 Test Method for Classification of Soils for Engineering Purposes[4]

D 2488 Practice for Description and Identification of Soils (Visual-Manual Procedure)[4]

D 3282 Practice for Classification of Soils and Soil-Aggregate Mixtures for Highway Construction Purposes[4]

E 11 Specification for Wire-Cloth Sieves for Testing Purposes[6]

E 319 Methods of Testing Single-Arm Balances[6]

E 898 Method of Testing Top-Loading, Direct-Reading Laboratory Scales and Balances[6]

3. Definitions

3.1 *Atterberg limits*—originally, seven "limits of consistency" of fine-grained soils were defined by Albert Atterberg. In current engineering usage, the term usually refers only to the liquid limit, plastic limit, and in some references, the shrinkage limit.

3.2 *consistency*—the relative ease with which a soil can be deformed.

3.3 *liquid limit (LL)*—the water content, in percent, of a soil at the arbitrarily defined boundary between the liquid and plastic states. This water content is defined as the water content at which a pat of soil placed in a standard cup and cut by a groove of standard dimensions will flow together at the base of the groove for a distance of 13 mm (½ in.) when subjected to 25 shocks from the cup being dropped 10 mm in a standard liquid limit apparatus operated at a rate of 2 shocks per second.

NOTE 2—The undrained shear strength of soil at the liquid limit is considered to be 2 ± 0.2 kPa (0.28 psi).

3.4 *plastic limit (PL)*—the water content, in percent, of a soil at the boundary between the plastic and brittle states. The water content at this boundary is the water content at which a soil can no longer be deformed by rolling into 3.2 mm (⅛ in.) in diameter threads without crumbling.

3.5 *plastic soil*—a soil which has a range of water content over which it exhibits plasticity and which will retain its shape on drying.

3.6 *plasticity index (PI)*—the range of water conten[illegible]er which a soil behaves plastically. Numerically, it [illegible] difference between the liquid limit and the plastic lim[illegible]

3.7 *liquidity index*—the ratio, expressed as a percentage, of (*1*) the natural water content of a soil minus its plastic limit, to (*2*) its plasticity index.

3.8 *activity number (A)*—the ratio of (*1*) the plasticity index of a soil to (*2*) the percent by weight of particles having an equivalent diameter smaller than 0.002 mm.

4. Summary of Method

4.1 The sample is processed to remove any material retained on a 425-µm (No. 40) sieve. The liquid limit is determined by performing trials in which a portion of the sample is spread in a brass cup, divided in two by a grooving tool, and then allowed to flow together from the shocks caused by repeatedly dropping the cup in a standard mechanical device. The multipoint liquid limit, Procedures A and B, requires three or more trials over a range of water contents to be performed and the data from the trials plotted or calculated to make a relationship from which the liquid limit is determined. The one-point liquid limit, Procedures C and D, uses the data from two trials at one water content multiplied by a correction factor to determine the liquid limit.

4.2 The plastic limit is determined by alternately pressing together and rolling into a 3.2 mm (⅛ in.) diameter thread a small portion of plastic soil until its water content is reduced to a point at which the thread crumbles and is no longe[illegible]ble to be pressed together and rerolled. The water conten[illegible] soil at this stage is reported as the plastic limit.

4.3 The plasticity index is calculated as the difference between the liquid limit and the plastic limit.

5. Significance and Use

5.1 This test method is used as an integral part of several engineering classification systems to characterize the fine-grained fractions of soils (see Test Method D 2487 and Practice D 3282) and to specify the fine-grained fraction of construction materials (see Specification D 1241). The liquid limit, plastic limit, and plasticity index of soils are also used extensively, either individually or together with other soil properties to correlate with engineering behavior such as compressibility, permeability, compactibility, shrink-swell, and shear strength.

5.2 The liquid and plastic limits of a soil can be used with the natural water content of the soil to express its relative consistency or liquidity index and can be used with the percentage finer than 2-µm size to determine its activity number.

5.3 The one-point liquid limit procedure is frequently used for routine classification purposes. When greater precision is required, as when used for the acceptance of a material or for correlation with other test data, the multipoint procedure should be used.

5.4 These methods are sometimes used to evaluate the weathering characteristics of clay-shale materials. [illegible]n subjected to repeated wetting and drying cycles, th[illegible]d limits of these materials tend to increase. The amount of increase is considered to be a measure of a shale's susceptibility to weathering.

[2] *Annual Book of ASTM Standards*, Vol 04.02.
[3] *Annual Book of ASTM Standards*, Vols 04.02, 04.03, and 04.08.
[4] *Annual Book of ASTM Standards*, Vol 04.08.
[5] *Annual Book of ASTM Standards*, Vol 09.01.
[6] *Annual Book of ASTM Standards*, Vol 14.02.

5.5 The liquid limit of a soil containing substantial amounts of organic matter decreases dramatically when the soil is oven-dried before testing. Comparison of the liquid limit of a sample before and after oven-drying can therefore be used as a qualitative measure of organic matter content of a soil.

6. Apparatus

6.1 *Liquid Limit Device*—A mechanical device consisting of a brass cup suspended from a carriage designed to control its drop onto a hard rubber base. A drawing showing the essential features of the device and the critical dimensions is given in Fig. 1. The design of the device may vary provided that the essential functions are preserved. The device may be operated either by a hand crank or by an electric motor.

6.1.1 *Base*—The base shall be hard rubber having a D Durometer hardness of 80 to 90, and a resilience such that an 8-mm (5/16-in.) diameter polished steel ball, when dropped from a height of 25 cm (9.84 in.) will have an average rebound of at least 80 % but no more than 90 %. The tests shall be conducted on the finished base with feet attached.

6.1.2 *Feet*—The base shall be supported by rubber feet designed to provide isolation of the base from the work surface and having an A Durometer hardness no greater than 60 as measured on the finished feet attached to the base.

6.1.3 *Cup*—The cup shall be brass and have a weight, including cup hanger, of 185 to 215 g.

6.1.4 *Cam*—The cam shall raise the cup smoothly and continuously to its maximum height, over a distance of at least 180° of cam rotation. The preferred cam motion is a uniformly accelerated lift curve. The design of the cam and follower combination shall be such that there is no upward or downward velocity of the cup when the cam follower leaves the cam.

NOTE 3—The cam and follower design in Fig. 1 is for uniformly accelerated (parabolic) motion after contact and assures that the cup has no velocity at drop off. Other cam designs also provide this feature and may be used. However, if the cam-follower lift pattern is not known, zero velocity at drop off can be assured by carefully filing or machining the cam and follower so that the cup height remains constant over the last 20 to 45° of cam rotation.

6.1.5 *Carriage*—The cup carriage shall be constructed in a way that allows convenient but secure adjustment of the height of drop of the cup to 10 mm (0.394 in.). The cup hanger shall be attached to the carriage by means of a pin which allows removal of the cup and cup hanger for cleaning and inspection.

6.1.6 *Optional Motor Drive*—As an alternative to the hand crank shown in Fig. 1, the device may be equipped with a motor to turn the cam. Such a motor must turn the cam at 2 ± 0.1 revolutions per second and must be isolated from the rest of the device by rubber mounts or in some other way that prevents vibration from the motor being transmitted to the rest of the apparatus. It must be equipped with an ON-OFF switch and a means of conveniently positioning the cam for height of drop adjustments. The results obtained using a motor-driven device must not differ from those obtained using a manually operated device.

DIMENSIONS

LETTER	A[Δ]	B[Δ]	C[Δ]	E[Δ]	F	G	H	J[Δ]	K[Δ]	L[Δ]	M[Δ]
MM	54 ± 0.5	2 ± 0.1	27 ± 0.5	56 ± 2.0	32	10	16	60 ± 1.0	50 ± 2.0	150 ± 2.0	125 ± 2.0
LETTER	N	P	R	T	U[Δ]	V	W	Z			
MM	24	28	24	45	47 ± 1.0	3.8	13	6.5			

[Δ] ESSENTIAL DIMENSIONS

CAM ANGLE DEGREES	CAM RADIUS
0	0.742 R
30	0.753 R
60	0.764 R
90	0.773 R
120	0.784 R
150	0.796 R
180	0.818 R
210	0.854 R
240	0.901 R
270	0.945R
300	0.974R
330	0.995R
360	1.000R

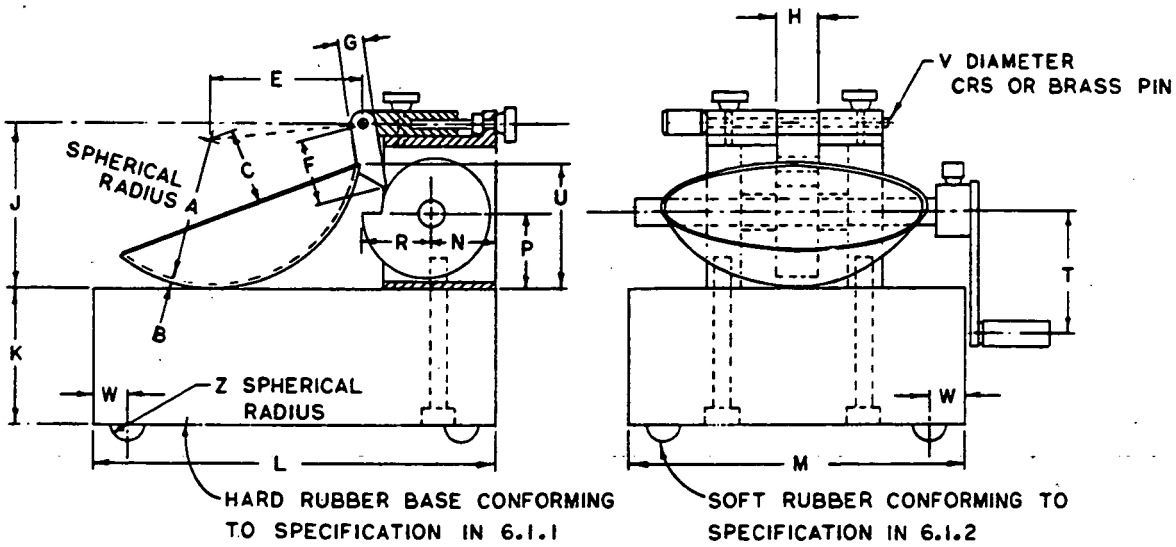

FIG. 1 Hand-Operated Liquid Limit Device

DIMENSIONS

LETTER	A△	B△	C△	D△	E△	F△
MM	2 ± 0.1	11 ± 0.2	40 ± 0.5	8 ± 0.1	50 ± 0.5	2 ± 0.1
LETTER	G	H	J	K△	L△	N
MM	10 MINIMUM	13	60	10 ±0.05	60 DEG ± 1 DEG	20

△ ESSENTIAL DIMENSIONS

□ BACK AT LEAST 15 MM FROM TIP

NOTE: DIMENSION A SHOULD BE 1.9–2.0 AND DIMENSION D SHOULD BE 8.0–8.1 WHEN NEW TO ALLOW FOR ADEQUATE SERVICE LIFE

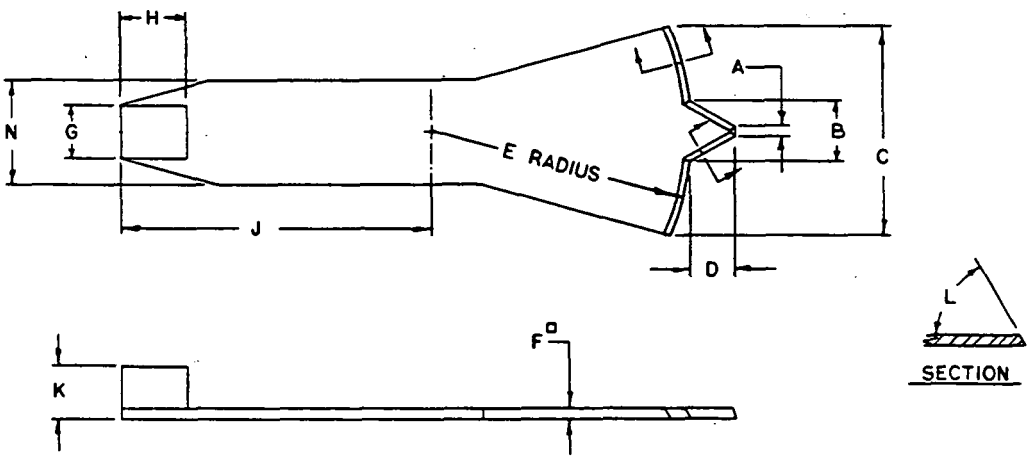

FIG. 2 Grooving Tool (Optional Height-of-Drop Gage Attached)

6.2 *Flat Grooving Tool*—A grooving tool having dimensions shown in Fig. 2. The tool shall be made of plastic or noncorroding metal. The design of the tool may vary as long as the essential dimensions are maintained. The tool may, but need not, incorporate the gage for adjusting the height of drop of the liquid limit device.

6.3 *Gage*—A metal gage block for adjusting the height of drop of the cup, having the dimensions shown in Fig. 3. The design of the tool may vary provided the gage will rest securely on the base without being susceptible to rocking, and the edge which contacts the cup during adjustment is straight, at least 10 mm (⅜ in.) wide, and without bevel or radius.

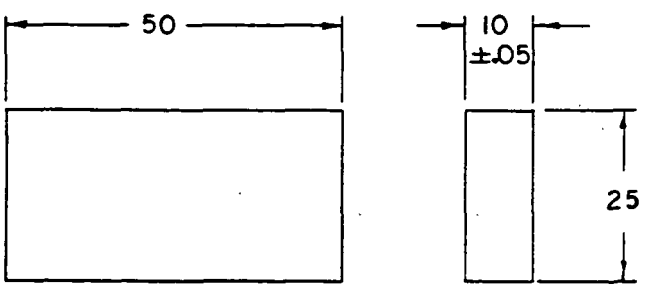

DIMENSIONS IN MILLIMETRES

FIG. 3 Height of Drop Gage

6.4 *Containers*—Small corrosion-resistant containers with snug-fitting lids for water content specimens. Aluminum or stainless steel cans 2.5 cm (1 in.) high by 5 cm (2 in.) in diameter are appropriate.

6.5 *Balance*—A balance readable to at least 0.01 g and having an accuracy of 0.03 g within three standard deviations within the range of use. Within any 15-g range, a difference between readings shall be accurate within 0.01 g (Notes 4 and 5).

NOTE 4—See Methods E 898 and E 319 for an explanation of terms relating to balance performance.

NOTE 5—For frequent use, a top-loading type balance with automatic load indication, readable to 0.01 g, and having an index of precision (standard deviation) of 0.003 or better is most suitable for this method. However, nonautomatic indicating equal-arm analytical balances and some small equal arm top pan balances having readabilities and sensitivities of 0.002 g or better provide the required accuracy when used with a weight set of ASTM Class 4 (National Bureau of Standards Class P) or better. Ordinary commercial and classroom type balances such as beam balances are not suitable for this method.

6.6 *Storage Container*—A container in which to store the prepared soil specimen that will not contaminate the specimen in any way, and which prevents moisture loss. A porcelain, glass, or plastic dish about 11.4 cm (4½ in.) in diameter and a plastic bag large enough to enclose the dish and be folded over is adequate.

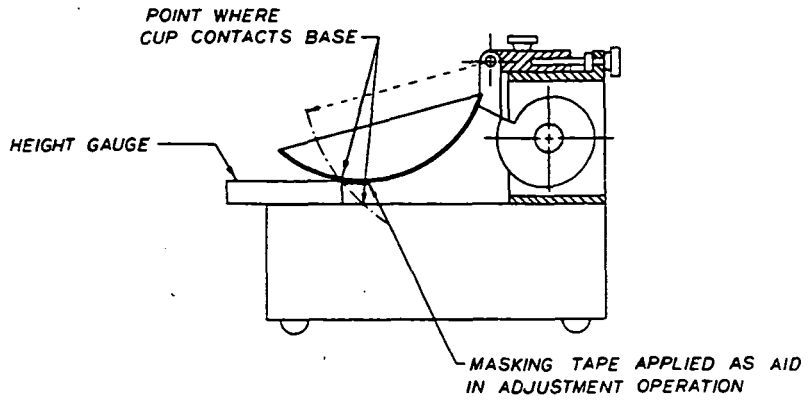

FIG. 4 Calibration for Height of Drop

6.7 *Ground Glass Plate*—A ground glass plate at least 30 cm (12 in.) square by 1 cm (⅜ in.) thick for mixing soil and rolling plastic limit threads.

6.8 *Spatula*—A spatula or pill knife having a blade about 2 cm (¾ in.) wide by about 10 cm (4 in.) long. In addition, a spatula having a blade about 2.5 cm (1 in.) wide and 15 cm (6 in.) long has been found useful for initial mixing of samples.

6.9 *Sieve*—A 20.3 cm (8 in.) diameter, 425-µm (No. 40) sieve conforming to the requirements of Specification E 11 and having a rim at least 5 cm (2 in.) above the mesh. A 2-mm (No. 10) sieve meeting the same requirements may also be needed.

6.10 *Wash Bottle*, or similar container for adding controlled amounts of water to soil and washing fines from coarse particles.

6.11 *Drying Oven*—A thermostatically controlled oven, preferably of the forced-draft type, capable of continuously maintaining a temperature of 110 ± 5°C throughout the drying chamber. The oven shall be equipped with a thermometer of suitable range and accuracy for monitoring oven temperature.

6.12 *Washing Pan*—A round, flat-bottomed pan at least 7.6 cm (3 in.) deep, slightly larger at the bottom than a 20.3-cm (8-in.) diameter sieve.

6.13 *Rod* (optional)—A metal or plastic rod or tube 3.2 mm (⅛ in.) in diameter and about 10 cm (4 in.) long for judging the size of plastic limit threads.

7. Materials

7.1 A supply of distilled or demineralized water.

8. Sampling

8.1 Samples may be taken from any location that satisfies testing needs. However, Methods C 702, Practice D 75, and Recommended Practice D 420 should be used as guides for selecting and preserving samples from various types of sampling operations. Samples which will be prepared using the wet preparation procedure, 10.1, must be kept at their natural water content prior to preparation.

8.2 Where sampling operations have preserved the natural stratification of a sample, the various strata must be kept separated and tests performed on the particular stratum of interest with as little contamination as possible from other strata. Where a mixture of materials will be used in construction, combine the various components in such proportions that the resultant sample represents the actual construction case.

8.3 Where data from this test method are to be used for correlation with other laboratory or field test data, use the same material as used for these tests where possible.

8.4 Obtain a representative portion from the total sample sufficient to provide 150 to 200 g of material passing the 425-µm (No. 40) sieve. Free flowing samples may be reduced by the methods of quartering or splitting. Cohesive samples shall be mixed thoroughly in a pan with a spatula, or scoop and a representative portion scooped from the total mass by making one or more sweeps with a scoop through the mixed mass.

9. Calibration of Apparatus

9.1 *Inspection of Wear:*

9.1.1 *Liquid Limit Device*—Determine that the liquid limit device is clean and in good working order. The following specific points should be checked:

9.1.1.1 *Wear of Base*—The spot on the base where the cup makes contact should be worn no greater than 10 mm (⅜ in.) in diameter. If the wear spot is greater than this, the base can be machined to remove the worn spot provided the resurfacing does not make the base thinner than specified in 6.1 and the other dimensional relationships are maintained.

9.1.1.2 *Wear of Cup*—The cup must be replaced when the grooving tool has worn a depression in the cup 0.1 mm (0.004 in.) deep or when the edge of the cup has been reduced to half its original thickness. Verify that the cup is firmly attached to the cup hanger.

9.1.1.3 *Wear of Cup Hanger*—Verify that the cup hanger pivot does not bind and is not worn to an extent that allows more than 3-mm (⅛-in.) side-to-side movement of the lowest point on the rim.

9.1.1.4 *Wear of Cam*—The cam shall not be worn to an extent that the cup drops before the cup hanger (cam follower) loses contact with the cam.

9.1.2 *Grooving Tools*—Inspect grooving tools for wear on a frequent and regular basis. The rapidity of wear depends on the material from which the tool is made and the types of soils being tested. Sandy soils cause rapid wear of grooving tools; therefore, when testing these materials, tools should be inspected more frequently than for other soils. Any tool with a tip width greater than 2.1 mm must not be used. The depth

of the tip of the grooving tool must be 7.9 to 8.1 mm.

NOTE 6—The width of the tip of grooving tools is conveniently checked using a pocket-sized measuring magnifier equipped with a millimetre scale. Magnifiers of this type are available from most laboratory supply companies. The depth of the tip of grooving tools can be checked using the depth measuring feature of vernier calipers.

9.2 *Adjustment of Height of Drop*—Adjust the height of drop of the cup so that the point on the cup that comes in contact with the base rises to a height of 10 ± 0.2 mm. See Fig. 4 for proper location of the gage relative to the cup during adjustment.

NOTE 7—A convenient procedure for adjusting the height of drop is as follows: place a piece of masking tape across the outside bottom of the cup parallel with the axis of the cup hanger pivot. The edge of the tape away from the cup hanger should bisect the spot on the cup that contacts the base. For new cups, placing a piece of carbon paper on the base and allowing the cup to drop several times will mark the contact spot. Attach the cup to the device and turn the crank until the cup is raised to its maximum height. Slide the height gage under the cup from the front, and observe whether the gage contacts the cup or the tape. See Fig. 4. If the tape and cup are both contacted, the height of drop is approximately correct. If not, adjust the cup until simultaneous contact is made. Check adjustment by turning the crank at 2 revolutions per second while holding the gage in position against the tape and cup. If a ringing or clicking sound is heard without the cup rising from the gage, the adjustment is correct. If no ringing is heard or if the cup rises from the gage, readjust the height of drop. If the cup rocks on the gage during this checking operation, the cam follower pivot is excessively worn and the worn parts should be replaced. Always remove tape after completion of adjustment operation.

MULTIPOINT LIQUID LIMIT—PROCEDURES A AND B

10. Preparation of Test Specimens

10.1 *Wet Preparation*—Except where the dry method of specimen preparation is specified (10.2), prepare specimens for test as described in the following sections.

10.1.1 *Samples Passing the 425-µm (No. 40) Sieve*—When by visual and manual procedures it is determined that the sample has little or no material retained on a 425-µm (No. 40) sieve, prepare a specimen of 150 to 200 g by mixing thoroughly with distilled or demineralized water on the glass plate using the spatula. If desired, soak soil in a storage dish with small amount of water to soften the soil before the start of mixing. Adjust the water content of the soil to bring it to a consistency that would require 25 to 35 blows of the liquid limit device to close the groove (Note 8). If, during mixing, a small percentage of material is encountered that would be retained on a 425-µm (No. 40) sieve, remove these particles by hand, if possible. If it is impractical to remove the coarser material by hand, remove small percentages (less than about 15 %) of coarser material by working the specimen through a 425-µm (No. 40) sieve using a piece of rubber sheeting, rubber stopper, or other convenient device provided the operation does not distort the sieve or degrade material that would be retained if the washing method described in 10.1.2 were used. If larger percentages of coarse material are encountered during mixing, or it is considered impractical to remove the coarser material by the methods just described, wash the sample as described in 10.1.2. When the coarse particles found during mixing are concretions, shells, or other fragile particles, do not crush these particles to make them pass a 425-µm (No. 40) sieve, but remove by hand or by washing. Place the mixed soil in the storage dish, cover to prevent loss of moisture, and allow to stand for at least 16 h (overnight). After the standing period and imme[illegible] before starting the test, thoroughly remix the soil.

NOTE 8—The time taken to adequately mix a soil will vary greatly, depending on the plasticity and initial water content. Initial mixing times of more than 30 min may be needed for stiff, fat clays.

10.1.2 *Samples Containing Material Retained on a 425-µm (No. 40) Sieve:*

10.1.2.1 Select a sufficient quantity of soil at natural water content to provide 150 to 200 g of material passing the 425-µm (No. 40) sieve. Place in a pan or dish and add sufficient water to cover the soil. Allow to soak until all lumps have softened and the fines no longer adhere to the surfaces of the coarse particles (Note 9).

NOTE 9—In some cases, the cations of salts present in tap water will exchange with the natural cations in the soil and significantly alter the test results should tap water be used in the soaking and washing operations. Unless it is known that such cations are not present in the tap water, distilled or demineralized water should be used. As a general rule, water containing more than 100 mg/L of dissolved solids should not be used for washing operations.

10.1.2.2 When the sample contains a large percentage of material retained on the 425-µm (No. 40) sieve, perform the following washing operation in increments, washing no more than 0.5 kg (1 lb) of material at one time. Place the 425-µm (No. 40) sieve in the bottom of the clean pan. Pour the soil water mixture onto the sieve. If gravel or coarse sand particles are present, rinse as many of these as possible with small quantities of water from a wash bottle, and di[illegible] Alternatively, pour the soil water mixture over a 2-mm [illegible] 10) sieve nested atop the 425-µm (No. 40) sieve, rins[illegible] fine material through and remove the 2-mm (No. 10) sieve. After washing and removing as much of the coarser material as possible, add sufficient water to the pan to bring the level to about 13 mm (½ in.) above the surface of the 425-µm (No. 40) sieve. Agitate the slurry by stirring with the fingers while raising and lowering the sieve in the pan and swirling the suspension so that fine material is washed from the coarser particles. Disaggregate fine soil lumps that have not slaked by gently rubbing them over the sieve with the fingertips. Complete the washing operation by raising the sieve above the water surface and rinsing the material retained with a small amount of clean water. Discard material retained on the 425-µm (No. 40) sieve.

10.1.2.3 Reduce the water content of the material passing the 425-µm (No. 40) sieve until it approaches the liquid limit. Reduction of water content may be accomplished by one or a combination of the following methods: (*a*) exposing the air currents at ordinary room temperature, (*b*) exposing to warm air currents from a source such as an electric hair dryer, (*c*) filtering in a Büchner funnel or using filter candles, (*d*) decanting clear water from surface of suspension, or (*e*) draining in a colander or plaster of paris dish lined with high retentivity, high wet-strength filter paper.[7] If a plaster of paris dish is used, take care that the dish never becomes sufficiently saturated that it fails to actively absorb water into its surface. Thoroughly dry dishes between uses. During e[illegible] ration and cooling, stir the sample often enough to p[illegible]

[7] S and S 595 filter paper available in 32-cm circles, has proven satisfactory.

overdrying of the fringes and soil pinnacles on the surface of the mixture. For soil samples containing soluble salts, use a method of water reduction such as *a* or *b* that will not eliminate the soluble salts from the test specimen.

10.1.2.4 Thoroughly mix the material passing the 425-µm (No. 40) sieve on the glass plate using the spatula. Adjust the water content of the mixture, if necessary, by adding small increments of distilled or demineralized water or by allowing the mixture to dry at room temperature while mixing on the glass plate. The soil should be at a water content that will result in closure of the groove in 25 to 35 blows. Return the mixed soil to the mixing dish, cover to prevent loss of moisture, and allow to stand for at least 16 h. After the standing period, and immediately before starting the test, remix the soil thoroughly.

10.2 *Dry Preparation:*

10.2.1 Select sufficient soil to provide 150 to 200 g of material passing the 425-µm (No. 40) sieve after processing. Dry the sample at room temperature or in an oven at a temperature not exceeding 60°C until the soil clods will pulverize readily. Disaggregation is expedited if the sample is not allowed to completely dry. However, the soil should have a dry appearance when pulverized. Pulverize the sample in a mortar with a rubber tipped pestle or in some other way that does not cause breakdown of individual grains. When the coarse particles found during pulverization are concretions, shells, or other fragile particles, do not crush these particles to make them pass a 425-µm (No. 40) sieve, but remove by hand or other suitable means, such as washing.

10.2.2 Separate the sample on a 425-µm (No. 40) sieve, shaking the sieve by hand to assure thorough separation of the finer fraction. Return the material retained on the 425-µm (No. 40) sieve to the pulverizing apparatus and repeat the pulverizing and sieving operations as many times as necessary to assure that all finer material has been disaggregated and material retained on the 425-µm (No. 40) sieve consists only of individual sand or gravel grains.

10.2.3 Place material remaining on the 425-µm (No. 40) sieve after the final pulverizing operations in a dish and soak in a small amount of water. Stir the soil water mixture and pour over the 425-µm (No. 40) sieve, catching the water and any suspended fines in the washing pan. Pour this suspension into a dish containing the dry soil previously sieved through the 425-µm (No. 40) sieve. Discard material retained on the 425-µm (No. 40) sieve.

10.2.4 Adjust the water content as necessary by drying as described in 10.1.2.3 or by mixing on the glass plate, using the spatula while adding increments of distilled or demineralized water, until the soil is at a water content that will result in closure of the groove in 25 to 35 blows.

10.2.5 Put soil in the storage dish, cover to prevent loss of moisture and allow to stand for at least 16 h. After the standing period, and immediately before starting the test, thoroughly remix the soil (Note 8).

11. Procedure

11.1 Place a portion of the prepared soil in the cup of the liquid limit device at the point where the cup rests on the base, squeeze it down, and spread it into the cup to a depth of about 10 mm at its deepest point, tapering to form an approximately horizontal surface. Take care to eliminate air bubbles from the soil pat but form the pat with as few strokes as possible. Heap the unused soil on the glass plate and cover with the inverted storage dish or a wet towel.

11.2 Form a groove in the soil pat by drawing the tool, beveled edge forward, through the soil on a line joining the highest point to the lowest point on the rim of the cup. When cutting the groove, hold the grooving tool against the surface of the cup and draw in an arc, maintaining the tool perpendicular to the surface of the cup throughout its

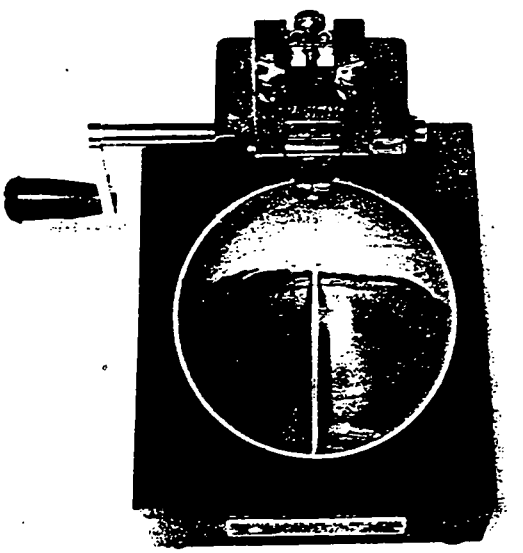

FIG. 5 Grooved Soil Pat in Liquid Limit Device

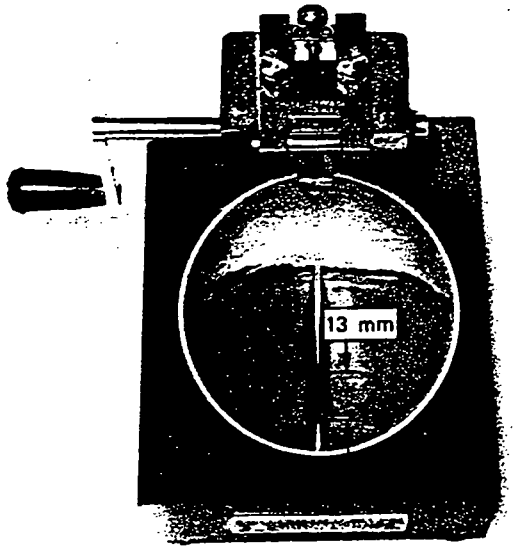

FIG. 6 Soil Pat After Groove Has Closed

movement. See Fig. 5. In soils where a groove cannot be made in one stroke without tearing the soil, cut the groove with several strokes of the grooving tool. Alternatively, cut the groove to slightly less than required dimensions with a spatula and use the grooving tool to bring the groove to final dimensions. Exercise extreme care to prevent sliding the soil pat relative to the surface of the cup.

11.3 Verify that no crumbs of soil are present on the base or the underside of the cup. Lift and drop the cup by turning the crank at a rate of 1.9 to 2.1 drops per second until the two halves of the soil pat come in contact at the bottom of the groove along a distance of 13 mm (½ in.). See Fig. 6.

NOTE 10—Use the end of the grooving tool, Fig. 2, or a scale to verify that the groove has closed 13 mm (½ in.).

11.4 Verify that an air bubble has not caused premature closing of the groove by observing that both sides of the groove have flowed together with approximately the same shape. If a bubble has caused premature closing of the groove, reform the soil in the cup, adding a small amount of soil to make up for that lost in the grooving operation and repeat 11.1 to 11.3. If the soil slides on the surface of the cup, repeat 11.1 through 11.3 at a higher water content. If, after several trials at successively higher water contents, the soil pat continues to slide in the cup or if the number of blows required to close the groove is always less than 25, record that the liquid limit could not be determined, and report the soil as nonplastic without performing the plastic limit test.

11.5 Record the number of drops, N, required to close the groove. Remove a slice of soil approximately the width of the spatula, extending from edge to edge of the soil cake at right angles to the groove and including that portion of the groove in which the soil flowed together, place in a weighed container, and cover.

11.6 Return the soil remaining in the cup to the glass plate. Wash and dry the cup and grooving tool and reattach the cup to the carriage in preparation for the next trial.

11.7 Remix the entire soil specimen on the glass plate adding distilled water to increase the water content of the soil and decrease the number of blows required to close the groove. Repeat 11.1 through 11.6 for at least two additional trials producing successively lower numbers of blows to close the groove. One of the trials shall be for a closure requiring 25 to 35 blows, one for closure between 20 and 30 blows, and one trial for a closure requiring 15 to 25 blows.

11.8 Determine the water content, W_N, of the soil specimen from each trial in accordance with Method D 2216. Make all weighings on the same balance. Initial weighings should be performed immediately after completion of the test. If the test is to be interrupted for more than about 15 min, the specimens already obtained should be weighed at the time of the interruption.

12. Calculations

12.1 Plot the relationship between the water content, W_N, and the corresponding number of drops, N, of the cup on a semilogarithmic graph with the water content as ordinates on the arithmetical scale, and the number of drops as abscissas on the logarithmic scale. Draw the best straight line through the three or more plotted points.

12.2 Take the water content corresponding to the intersection of the line with the 25-drop abscissa as the liquid limit of the soil. Computational methods may be substituted for the graphical method for fitting a straight line to the data and determining the liquid limit.

ONE-POINT LIQUID LIMIT—PROCEDURES C AND D

13. Preparation of Test Specimens

13.1 Prepare the specimen in the same manner as described in Section 10, except that at mixing, adjust the water content to a consistency requiring 20 to 30 drops of the

TABLE 1 Factors for Obtaining Liquid Limit from Water Content and Number of Drops Causing Closure of Groove

N (Number of Drops)	K (Factor for Liquid Limit)
20	0.974
21	0.979
22	0.985
23	0.990
24	0.995
25	1.000
26	1.005
27	1.009
28	1.014
29	1.018
30	1.022

liquid limit cup to close the groove.

14. Procedure

14.1 Proceed as described in 11.1 through 11.5 except that the number of blows required to close the groove shall be 20 to 30. If less than 20 or more than 30 blows are required, adjust the water content of the soil and repeat the procedure.

14.2 Immediately after removing a water content specimen as described in 11.5, reform the soil in the cup, adding a small amount of soil to make up for that lost in the grooving and water content sampling operations. Repeat 11.2 through 11.5, and, if the second closing of the groove requires the same number of drops or no more than two drops difference, secure another water content specimen. Otherwise, remix the entire specimen and repeat.

NOTE 11—Excessive drying or inadequate mixing will cause the number of blows to vary.

14.3 Determine water contents of specimens as described in 11.8.

15. Calculations

15.1 Determine the liquid limit for each water content specimen using one of the following equations:

$$LL = W_N \left(\frac{N}{25}\right)^{0.121} \quad \text{or}$$

$$LL = K(W_N)$$

where:

N = the number of blows causing closure of the groove at water content,

W_N = water content, and

K = a factor given in Table 1.

The liquid limit is the average of the two trial liquid limit values.

15.2 If the difference between the two trial liquid limit values is greater than one percentage point, repeat the test.

PLASTIC LIMIT

16. Preparation of Test Specimen

16.1 Select a 20-g portion of soil from the material prepared for the liquid limit test, either after the second mixing before the test, or from the soil remaining after completion of the test. Reduce the water content of the soil to a consistency at which it can be rolled without sticking to the hands by spreading and mixing continuously on the glass plate. The drying process may be accelerated by exposing the soil to the air current from an electric fan, or by blotting with paper that does not add any fiber to the soil, such as hard surface paper toweling or high wet-strength filter paper.

17. Procedure

17.1 From the 20-g mass, select a portion of 1.5 to 2.0 g. Form the test specimen into an ellipsoidal mass. Roll this mass between the palm or fingers and the ground-glass plate with just sufficient pressure to roll the mass into a thread of uniform diameter throughout its length (Note 12). The thread shall be further deformed on each stroke so that its diameter is continuously reduced and its length extended until the diameter reaches 3.2 ± 0.5 mm (0.125 ± .020 in.), taking no more than 2 min (Note 13). The amount of hand or finger pressure required will vary greatly, according to the soil. Fragile soils of low plasticity are best rolled under the outer edge of the palm or at the base of the thumb.

NOTE 12—A normal rate of rolling for most soils should be 80 to 90 strokes per minute, counting a stroke as one complete motion of the hand forward and back to the starting position. This rate of rolling may have to be decreased for very fragile soils.

NOTE 13—A 3.2-mm (⅛-in.) diameter rod or tube is useful for frequent comparison with the soil thread to ascertain when the thread has reached the proper diameter, especially for inexperienced operators.

17.1.1 When the diameter of the thread becomes 3.2 mm, break the thread into several pieces. Squeeze the pieces together, knead between the thumb and first finger of each hand, reform into an ellipsoidal mass, and reroll. Continue this alternate rolling to a thread 3.2 mm in diameter, gathering together, kneading and rerolling, until the thread crumbles under the pressure required for rolling and the soil can no longer be rolled into a 3.2-mm diameter thread (See Fig. 7). It has no significance if the thread breaks into threads of shorter length. Roll each of these shorter threads to 3.2 mm in diameter. The only requirement for continuing the test is that they are able to be reformed into an ellipsoidal mass and rolled out again. The operator shall at no time attempt to produce failure at exactly 3.2 mm diameter by allowing the thread to reach 3.2 mm, then reducing the rate of rolling or the hand pressure, or both, while continuing the rolling without further deformation until the thread falls apart. It is permissible, however, to reduce the total amount of deformation for feebly plastic soils by making the initial diameter of the ellipsoidal mass nearer to the required 3.2-mm final diameter. If crumbling occurs when the thread has a diameter greater than 3.2 mm, this shall be considered a satisfactory end point, provided the soil has been previously rolled into a thread 3.2 mm in diameter. Crumbling of the thread will manifest itself differently with the various types of soil. Some soils fall apart in numerous small aggregations of particles, others may form an outside tubular layer that starts splitting at both ends. The splitting progresses toward the middle, and finally, the thread falls apart in many small platy particles. Fat clay soils require much pressure to deform the thread, particularly as they approach the plastic limit. With these soils, the thread breaks into a series of barrel-shaped segments about 3.2 to 9.5 mm (⅛ to ⅜ in.) in length.

17.2 Gather the portions of the crumbled thread together and place in a weighed container. Immediately cover the container.

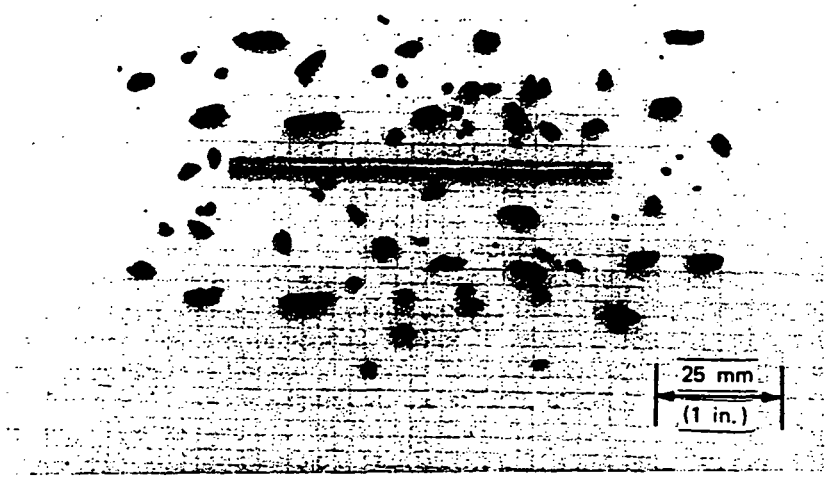

FIG. 7 Lean Clay Soil at the Plastic Limit

17.3 Select another 1.5 to 2.0 g portion of soil from the original 20-g specimen and repeat the operations described in 17.1 and 17.2 until the container has at least 6 g of soil.

17.4 Repeat 17.1 through 17.3 to make another container holding at least 6 g of soil. Determine the water content, in percent, of the soil contained in the containers in accordance with Method D 2216. Make all weighings on the same balance.

NOTE 14—The intent of performing two plastic limit trials is to verify the consistency of the test results. It is acceptable practice to perform only one plastic limit trial when the consistency in the test results can be confirmed by other means.

18. Calculations

18.1 Compute the average of the two water contents. If the difference between the two water contents is greater than two percentage points, repeat the test. The plastic limit is the average of the two water contents.

PLASTICITY INDEX

19. Calculations

19.1 Calculate the plasticity index as follows:

$$PI = LL - PL$$

where:

LL = the liquid limit,

PL = the plastic limit.

Both LL and PL are whole numbers. If either the liquid limit or plastic limit could not be determined, or if the plastic limit is equal to or greater than the liquid limit, report the soil as nonplastic, NP.

20. Report

20.1 Report the following information:

20.1.1 Sample identifying information,

20.1.2 Any special specimen selection process used, such as removal of sand lenses from undisturbed sample,

20.1.3 Report sample as airdried if the sample was airdried before or during preparation,

20.1.4 Liquid limit, plastic limit, and plasticity index to the nearest whole number and omitting the percent designation. If the liquid limit or plastic limit tests could not be performed, or if the plastic limit is equal to or greater than the liquid limit, report the soil as nonplastic, NP,

20.1.5 An estimate of the percentage of sample retained on the 425-μm (No. 40) sieve, and

20.1.6 Procedure by which liquid limit was performed, if it differs from the multipoint method.

21. Precision and Bias

21.1 No interlaboratory testing program has as yet been conducted using this test method to determine multilaboratory precision.

21.2 The within laboratory precision of the results of tests performed by different operators at one laboratory on two soils using Procedure A for the liquid limit is shown in Table 2.

TABLE 2 Within Laboratory Precision for Liquid Limit

	Average Value, $\bar{x}$	Standard Deviation, s
Soil A:		
PL	21.9	1.07
LL	27.9	1.07
Soil B:		
PL	20.1	1.21
LL	32.6	0.98

000333

The American Society for Testing and Materials takes no position respecting the validity of any patent rights asserted in connection with any item mentioned in this standard. Users of this standard are expressly advised that determination of the validity of any such patent rights, and the risk of infringement of such rights, are entirely their own responsibility.

This standard is subject to revision at any time by the responsible technical committee and must be reviewed every five years and if not revised, either reapproved or withdrawn. Your comments are invited either for revision of this standard or for additional standards and should be addressed to ASTM Headquarters. Your comments will receive careful consideration at a meeting of the responsible technical committee, which you may attend. If you feel that your comments have not received a fair hearing you should make your views known to the ASTM Committee on Standards, 1916 Race St., Philadelphia, PA 19103.

Standard Guide for Pore-Liquid Sampling from the Vadose Zone[1]

This standard is issued under the fixed designation D 4696; the number immediately following the designation indicates the year of original adoption or, in the case of revision, the year of last revision. A number in parentheses indicates the year of last reapproval. A superscript epsilon (ε) indicates an editorial change since the last revision or reapproval.

1. Scope

1.1 This guide discusses equipment and procedures used for sampling pore-liquid from the vadose zone (unsaturated zone). The guide is limited to in-situ techniques and does not include soil core collection and extraction methods for obtaining samples.

1.2 The term "pore-liquid" is applicable to any liquid from aqueous pore-liquid to oil. However, all of the samplers described in this guide were designed, and are used to sample aqueous pore-liquids only. The abilities of these samplers to collect other pore-liquids may be quite different than those described.

1.3 Some of the samplers described in this guide are not currently commercially available. These samplers are presented because they may have been available in the past, and may be encountered at sites with established vadose zone monitoring programs. In addition, some of these designs are particularly suited to specific situations. If needed, these samplers could be fabricated.

1.4 The values stated in SI units are to be regarded as the standard.

1.5 *This standard does not purport to address all of the safety problems, if any, associated with its use. It is the responsibility of the user of this standard to establish appropriate safety and health practices and determine the applicability of regulatory limitations prior to use.*

2. Referenced Documents

2.1 *ASTM Standards:*

D 653 Terminology Relating to Soil, Rock, and Contained Fluids[2]

3. Terminology

3.1 *Definitions:*

3.1.1 Where reasonable, precise terms and names have been used within this guide. However, certain terms and names with varying definitions are ubiquitous within the literature and industry of vadose zone monitoring. For purposes of recognition, these terms and names have been included in the guide with their most common usage. In these instances, the common definitions have been included in Appendix X1. Examples of such terms are soil, lysimeter, vacuum and pore-liquid tension.

3.2 *Descriptions of Terms Specific to This Standard:*

3.2.1 Appendix X1 is a compilation of those terms used in this guide. More comprehensive compilations, that were used as sources for Appendix X1, are (in decreasing order of their usage):

3.2.1.1 Terminology D 653,

3.2.1.2 *Compilation of ASTM Terminology*,[3]

3.2.1.3 *Glossary of Soil Science Terms*, Soil Science Society of America,[4] and,

3.2.1.4 *Webster's New Collegiate Dictionary*.[5]

4. Summary of Guide

4.1 Pores in the vadose zone can be saturated or unsaturated. Some samplers are designed to extract liquids from unsaturated pores; others are designed to obtain samples from saturated pores (for example, perched ground water) or saturated macropores (for example, fissures, cracks, and burrows). This guide addresses these categories. The sampler types discussed are:

4.1.1 Suction samplers (unsaturated sampling), (see Section 7),

4.1.2 Free drainage samplers (saturated sampling), (see Section 8),

4.1.3 Perched ground water samplers (saturated sampling), (see Section 9), and

4.1.4 Experimental absorption samplers (unsaturated sampling), (see Section 10).

4.2 Most samplers designed for sampling liquid from unsaturated pores may also be used to sample from saturated pores. This is useful in areas where the water table fluctuates, so that both saturated and unsaturated conditions occur at different times. However, samplers designed for sampling from saturated pores cannot be used in unsaturated conditions. This is because the liquid in unsaturated pores is held at less than atmospheric pressures (see *Richard's outflow principle*, in Appendix X1).

4.3 The discussion of each sampler is divided into specific topics that include:

4.3.1 Operating principles,

4.3.2 Description,

4.3.3 Installation,

4.3.4 Operation, and

4.3.5 Limitations.

5. Significance and Use

5.1 Sampling from the vadose zone may be an important component of some ground water monitoring strategies. It can provide information regarding contaminant transport

[1] This guide is under the jurisdiction of ASTM Committee D-18 on Soil and Rock and is the direct responsibility of Subcommittee D18.21 on Ground Water Vadose Zone Investigations.

Current edition approved April 15, 1992. Published June 1992.

[2] *Annual Book of ASTM Standards*, Vol 04.08.

[3] *Compilation of ASTM Terminology*, Sixth edition, ASTM, 1916 Race Street, Philadelphia, PA 19103, 1986.

[4] *Glossary of Soil Science Terms*, Soil Science Society of America, 1987.

[5] *Webster's New Collegiate Dictionary*, Fifth edition, 1977.

TABLE 1 Suction Sampler Summary

Sampler Type	Porous Section Material	Maximum[A] Pore Size (μm)	Air Entry Value (cbar)	Operational Suction Range (cbar)	Maximum Operation Depth (m)
Vacuum lysimeters	Ceramic	1.2 to 3.0 (1)[A]	>100	<60 to 80	<7.5
	PTFE	15 to 30 (2)[A]	10 to 21	<10 to 21	<7.5
	Stainless steel	NA[B]	49 to 5	49 to 5	<7.5
Pressure-vacuum lysimeters	Ceramic	1.2 to 3.0 (1)[A]	>100	<60 to 80	<15
	PTFE	15 to 30 (2)[A]	10 to 21	<10 to 21	<15
High pressure-vacuum lysimeters	Ceramic	1.2 to 3.0 (1)[A]	>100	<60 to 80	<91
	PTFE	15 to 30 (2)[A]	10 to 21	<10 to 21	<91
Filter tip samplers	Polyethylene	NA[B]	NA[B]	NA[B]	None
	Ceramic	2 to 3 (1)	>100	<60 to 80	<7.5
	Stainless steel	NA[B]	NA[B]	NA[B]	none
Cellulose-acetate hollow-fiber samplers	Cellulose	<2.8	>100	<60 to 80	<7.5
	Acetate				
	Non cellulosic				
	Polymer	<2.8	>100	<60 to 80	<7.5
Membrane filter samplers	Cellulose	<2.8	>100	<60 to 80	<7.5
	Acetate				
	PTFE	2 to 5	NA[B]	NA[B]	<7.5
Vacuum plate samplers	Alundum	NA[B]	NA[B]	NA[B]	<7.5
	Ceramic	1.2 to 3.0	>100	60 to 80	<7.5
	Fritted glass	4 to 5.5	NA[B]	NA[B]	<7.5
	Stainless steel	NA[B]	49 to 5	49 to 5	<7.5

[A] Pore size determined by bubbling pressure (1) or mercury intrusion (2).
[B] NA = Not available.

and attenuation in the vadose zone. This information can be used for mitigating potential problems prior to degradation of a ground water resource (1).[6]

5.2 The choice of appropriate sampling devices for a particular location is dependent on various criteria. Specific guidelines for designing vadose zone monitoring programs [illegible] been discussed by Morrison (1), Wilson (2), Wilson (3), [illegible]tt (4), Wilson (5), Everett et al (6), Wilson (7), Everett [illegible] (8), Everett et al (9), Robbins et al (10), Merry and Palmer (11), U.S. EPA (12), Ball (13), and Wilson (14). In general, it is prudent to combine various unsaturated and free drainage samplers into a program, so that the different flow regimes may be monitored.

5.3 This guide does not attempt to present details of installation and use of the equipment discussed. However, an effort has been made to present those references in which the specific techniques may be found.

6. Criteria for Selecting Pore-Liquid Samplers

6.1 Decisions on the types of samplers to use in a monitoring program should be based on consideration of a variety of criteria that include the following:

6.1.1 Required sampling depths,
6.1.2 Required sample volumes,
6.1.3 Soil characteristics,
6.1.4 Chemistry and biology of the liquids to be sampled,
6.1.5 Moisture flow regimes,
6.1.6 Required durability of the samplers,
6.1.7 Required reliability of the samplers,
6.1.8 Climate,
6.1.9 Installation requirements of the samplers,
6.1.10 Operational requirements of the samplers,
6.1.11 Commercial availability, and
6.1.12 Costs.

Some of these criteria are discussed in this guide. However, the ability to balance many of these factors against one another can only be obtained through field experience.

7. Suction Samplers

7.1 Table 1 presents the various types of suction samplers. The range of operating depths is the major criterion by which suction samplers are differentiated. Accordingly, the categories of suction samplers are as follows:

7.1.1 *Vacuum Lysimeters*—These samplers are theoretically operational at depths less than about 7.5 m. The practical operational depth is 6 m under ideal conditions.

7.1.2 *Pressure-Vacuum Lysimeters*—These samplers are operational at depths less than about 15 m.

7.1.3 *High Pressure-Vacuum Lysimeters*—(Also known as pressure-vacuum lysimeters with transfer vessels.) These samplers are normally operational down to about 46 m, although installations as deep as 91 m have been reported (15).

7.1.4 *Suction Lysimeters With Low Bubbling Pressures (Samplers With PTFE Porous Sections)*—These samplers are available in numerous designs that can be used to maximum depths varying from about 7.5 to 46 m.

NOTE 1—The samplers of 7.1.1, 7.1.2, 7.1.3, and 7.1.4 are referred to collectively as suction lysimeters. Within this standard, lysimeter is defined as a device used to collect percolating water for analyses (16).

7.1.5 *Filter Tip Samplers*—These samplers theoretically have no maximum sampling depth.

7.1.6 *Experimental Suction Samplers*—The samplers have limited field applications at the present time. They include cellulose-acetate hollow-fiber samplers, membrane filter samplers, and vacuum plate samplers. They are generally limited to depths less than about 7.5 m.

7.2 *Operating Principles:*

7.2.1 *General:*

7.2.1.1 Suction lysimeters consist of a hollow, porous section attached to a sample vessel or a body tube. Samples are obtained by applying suction to the sampler and col-

[6] The boldface numbers in parentheses refer to the list of references at the end of this standard.

lecting pore-liquid in the body tube. Samples are retrieved by a variety of methods.

7.2.1.2 Unsaturated portions of the vadose zone consist of interconnecting soil particles, interconnecting air spaces, and interconnecting liquid films. Liquid films in the soil provide hydraulic contact between the saturated porous section of the sampler and the soil (see Fig. 1). When suction greater than the soil pore-liquid tension is applied to the sampler, a pressure potential gradient towards the sampler is created. If the meniscuses of the liquid in the porous segment are able to withstand the applied suction (depending on the maximum pore sizes and hydrophobicity/hydrophilicity), liquid moves into the sampler. The ability of the meniscuses to withstand a suction decreases with increasing pore size and also with increasing hydrophobicity of the porous segment (see 7.6). If the maximum pore sizes are too large and hydrophobicity too great, the meniscuses are not able to withstand the applied suction. As a result, they break down, hydraulic contact is lost, and only air enters the sampler. As described in 7.6, ceramic porous segments are hydrophilic and the maximum pore sizes are small enough to allow meniscuses to withstand the entire range of sampling suctions. Presently available polytetrafluoroethylene (PTFE) porous segments are hydrophobic, the maximum pore sizes are larger, and only a very limited range of sampling suction can be applied before meniscuses break down and sampling ends (see 7.6.1.3). Therefore, samplers made with PTFE porous segments may be used only for sampling soils with low pore-liquid tensions (12, 17).

7.2.1.3 The ability of a sampler to withstand applied suctions can be directly measured by its bubbling pressure. The bubbling pressure is measured by saturating the porous segment, immersing it in water, and pressurizing the inside of the porous segment with air. The pressure at which air starts bubbling through the porous segment into the surrounding water is the bubbling pressure. The magnitude of the bubbling pressure is equal to the magnitude of the maximum suction that can be applied to the sampler before air entry occurs (air entry value). Because the bubbling pressure is a direct measure of how a sampler will perform, it is more useful than measurement of pore size distributions.

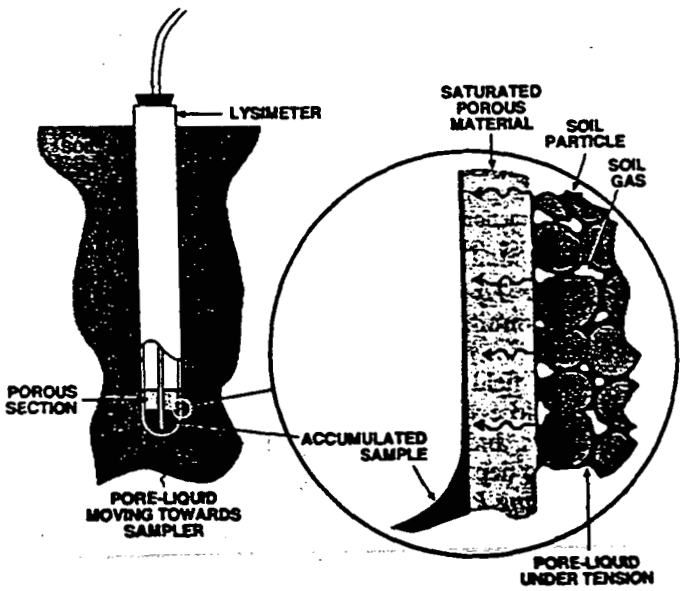

FIG. 1 Porous Section/Soil Interactions

7.2.1.4 As soil pore-liquid tensions increase (low pore-liquid contents), pressure gradients towards the sampler decrease. Also, the soil hydraulic conductivity decreases exponentially. These result in lower flow rates into the sampler. At pore-liquid tensions above about 60 (for coarse grained soils) to 80 cbar (for fine grained soils), the flow rates are effectively zero and samples cannot be collected.

7.2.2 *Suction Lysimeters:*

7.2.2.1 Vacuum lysimeters directly transfer samples to the surface via a suction line. Because the maximum suction lift of water is about 7.5 m, these samplers cannot be operated below this depth. In reality, suction lifts of 6 m should be considered a practical maximum depth.

7.2.2.2 Samples may be retrieved using the same technique as for vacuum lysimeters or, for deeper applications, the sample is retrieved by pressurizing the sampler with one line; this pushes the sample up to the surface in a second line.

7.2.2.3 High pressure-vacuum lysimeters operate in the same manner as pressure-vacuum lysimeters. However, they include an inbuilt check transfer vessel or a chamber between the sampler and the surface. This prevents sample loss through the porous section during pressurization, and prevents possible cup damage due to overpressurization.

7.2.2.4 Suction lysimeters with low bubbling pressures are available in each of the three previous designs. The only difference between these samplers and the three previous designs is that these porous sections are made with PTFE. The low bubbling pressure (and hence large pore size or hydrophobicity, or both) of PTFE constrains these samplers to soils that are nearly saturated (see 7.2.1.2 and 7.6.1.3).

7.2.3 *Filter Tip Samplers*—Samples are collected from a filter tip sampler by lowering an evacuated sample vial down an access tube to a permanently emplaced porous tip. The vial is connected to the porous tip and sample flows through the porous section and into the vial. Once full, the vial is retrieved.

7.2.4 *Experimental Suction Samplers*—Experimental suction samplers generally operate on the same principle as vacuum lysimeters with different combinations of porous materials to enhance hydraulic contact. The samplers are generally fragile and difficult to install. As with vacuum lysimeters, they are generally limited to depths of less than about 7.5 m.

7.3 *Description:*

7.3.1 *Vacuum Lysimeters:*

7.3.1.1 Vacuum lysimeters generally consist of a porous cup mounted on the end of a tube, similar to a tensiometer. The cup is attached to the tube with adhesives (18[7]) or with "V" shaped flush threading sealed with an "O" ring. A stopper is inserted into the upper end of the body tube and fastened in the same manner as the porous cup or, in the case of rubber stoppers, inserted tightly (12). To recover samples, a suction line is inserted through the stopper to the base of the sampler. The suction line extends to the surface and connects to a sample bottle and suction source in series.

[7] This reference is manufacturer's literature, and it has not been subjected to technical review.

Body tubes up to 1.8 m long have been reported (15) (see 2).

7.3.1.2 Harris and Hansen (19) described a vacuum lysimeter with a 6 mm by 65 mm ceramic porous cup designed for intensive sampling in small areas.

7.3.1.3 A variety of materials have been used for the porous segment including nylon mesh (20), fritted glass (21), sintered glass (22), Alundum (manufacturer name), stainless steel (23[7]), and ceramics (1.2 to 3.0 μm max pore size) (18[7]). The sampler body tube has been made with PVC, ABS, acrylic, stainless steel (24) and PTFE (18[7], 25[7]). Ceramic porous segments are attached with epoxy adhesives or with flush threading. The stopper is typically made of rubber (12), neoprene, or PTFE. The outlet lines are commonly PTFE, rubber, polyethylene, polypropylene, vinyl, nylon, and historically, copper. Fittings and valves are available in brass or stainless steel.

7.3.2 *Pressure-Vacuum Lysimeters:*

7.3.2.1 These samplers were developed by Parizek and Lane (26) for sampling deep moving pollutants in the vadose zone. The porous segment is usually a porous cup at the bottom of a body tube. The porous cup is attached with epoxy adhesives (18[7]) or with "V" shaped flush threading sealed with an "O" ring (25[7]). Two lines are forced through a two-hole stopper sealed into the upper end of the body tube. The discharge line extends to the base of the sampler and the pressure-vacuum line terminates a short distance below the stopper. At the surface, the discharge line connects to a sample bottle and the pressure-vacuum line connects to a pressure-vacuum pump. Designs are available that do not use a stopper but rather an "O" ring sealed, flush threaded top plug (25[7]). Tubing lines to the surface are attached to the top plug with threaded tubing fittings of appropriate materials. Body tubes are commonly available with 2.2 and 4.8 cm diameters and in a variety of lengths (see Fig. 3). The sampler and its components have been made out of the same materials used for vacuum lysimeters.

7.3.2.2 These samplers can retrieve samples from depths below 7.5 m because pressure is used for retrieval. However, during pressurization some of the sample is forced back out of the cup. At depths over about 15 m, the volume of sample lost in this fashion may be significant. In addition, at depths over about 15 m, pressures required to bring the sample to the surface may be high enough to damage the cup or to reduce its hydraulic contact with the soil (27, 28). Rapid pressurization causes similar problems. Morrison and Tsai (29) developed a tube lysimeter with the porous section located midway up the body tube instead of at the bottom (see Fig. 4). This design mitigates the problem of sample being forced back through the cup. However, it does not prevent problems with porous segment damage due to overpressurization or rapid pressurization. The sleeve lysimeter (that is no longer available) was a modification to this design for use with a monitoring well (1) (see Fig. 5). Another modification is the casing lysimeter that consists of several tube lysimeters threaded into one unit (see Fig. 6). This arrangement allows precise spacing between units (30).

7.3.2.3 Nightingale et al (31) described a design that

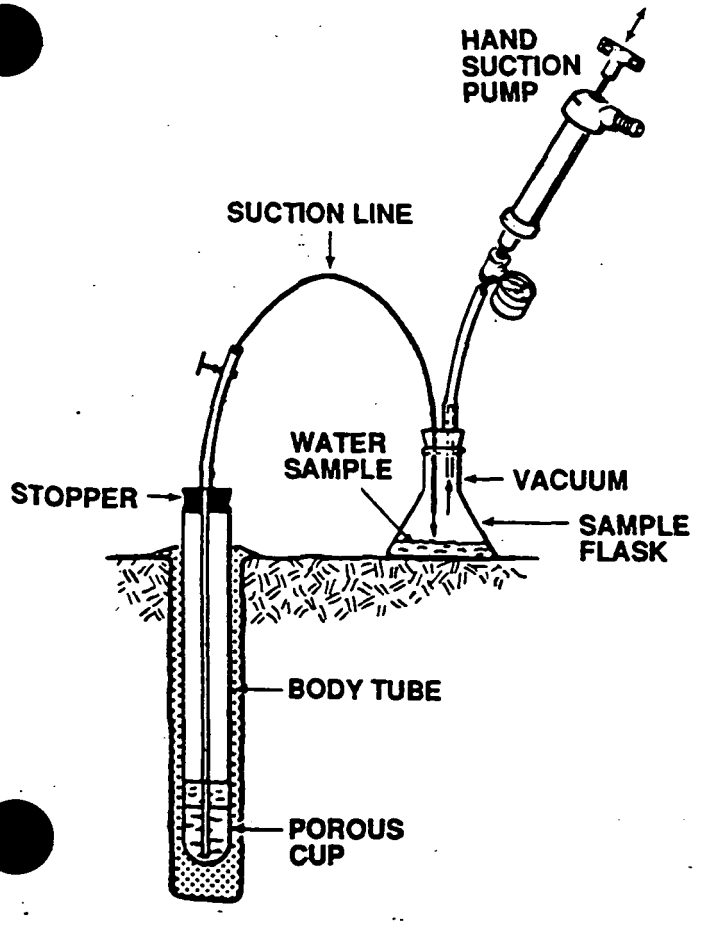

FIG. 2 Vacuum Lysimeter

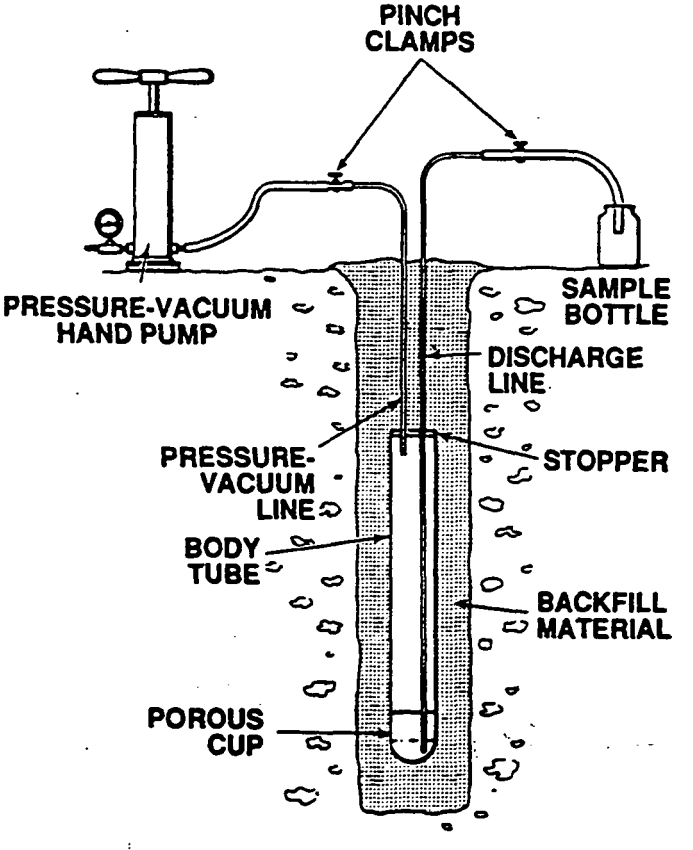

FIG. 3 Pressure-Vacuum Lysimeter

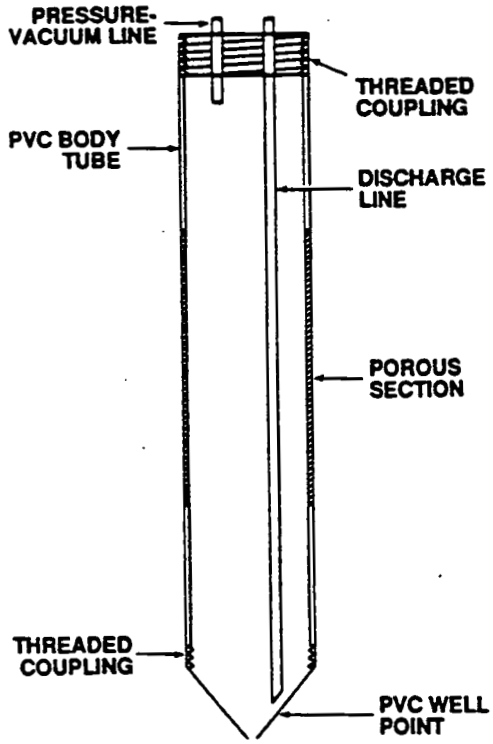

FIG. 4 Tube Pressure-Vacuum Lysimeter

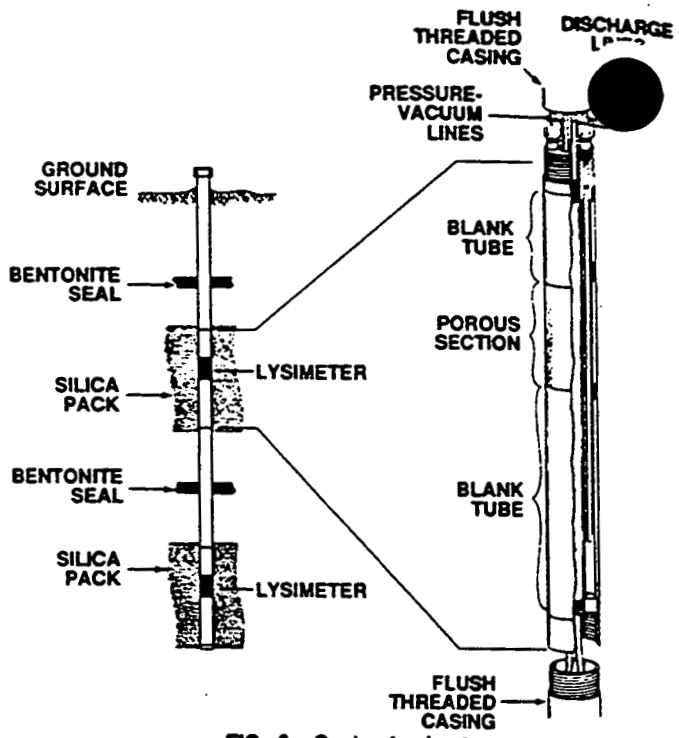

FIG. 6 Casing Lysimeter

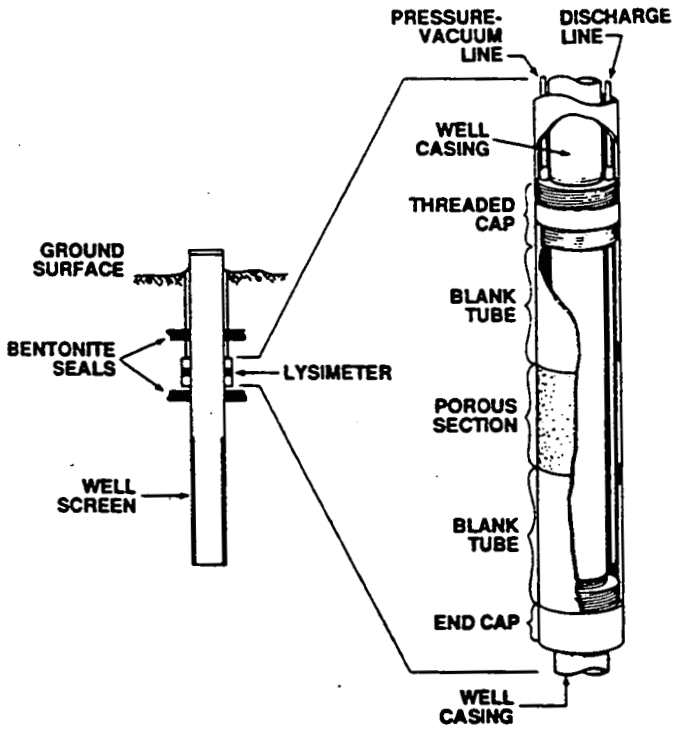

FIG. 5 Sleeve Lysimeter

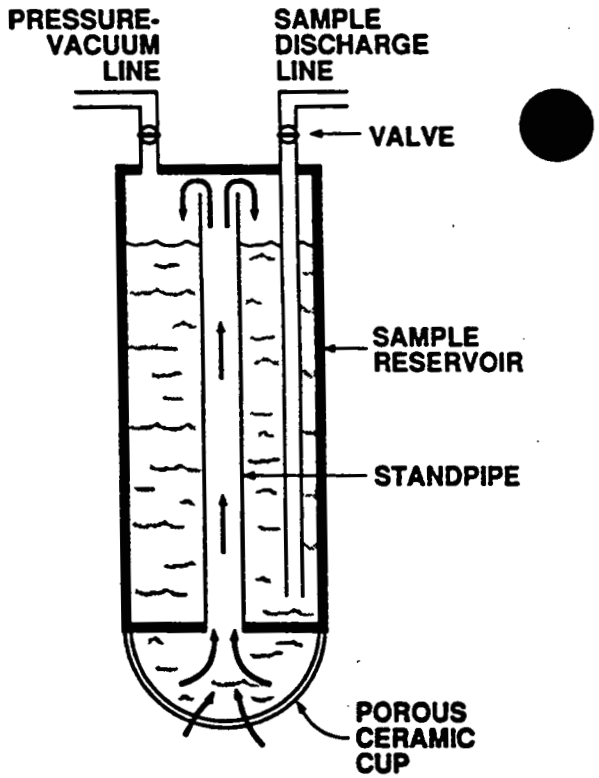

FIG. 7 Modified Pressure-Vacuum Lysimeter

allows incoming samples to flow into a portion of the sampler not in contact with the basal, porous ceramic cup (see Fig. 7). The ceramic cup is wedged into the body tube without adhesives or threading. The sampler was used to sample the vadose zone, the capillary fringe, and the fluctuating water table in a recharge area. Knighton and Streblow (32) reported a sampler with the porous cup upon the top of a chamber. This design was used wi[illegible]p diameters ranging from 7.6 to 12.7 cm (see Fig. 8[illegible]e designs also allow pressurization for sample retrieval without significant liquid loss. However, because the porous cups are

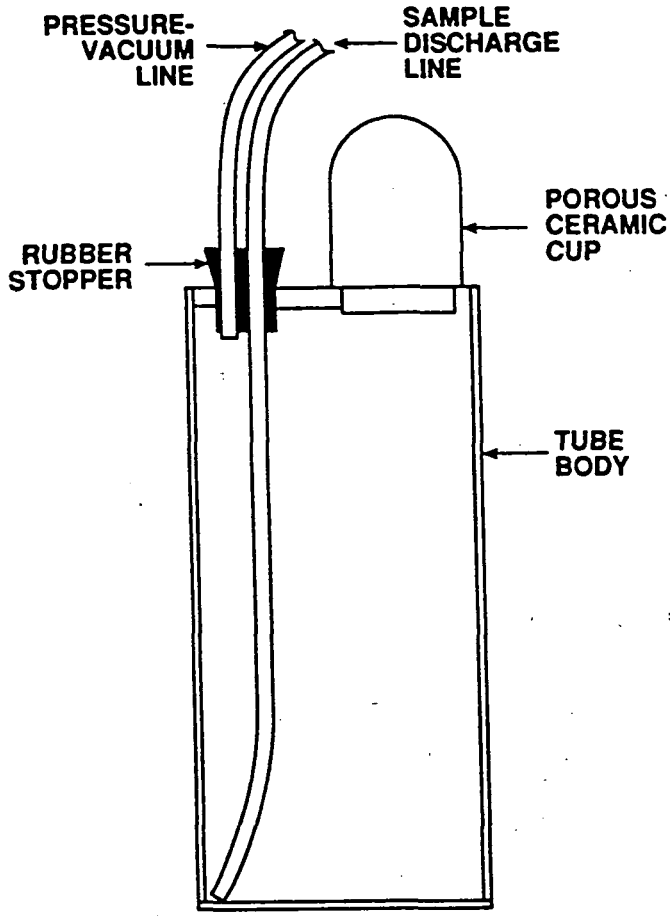

FIG. 8 Knighton and Streblow-Type Vacuum Lysimeter

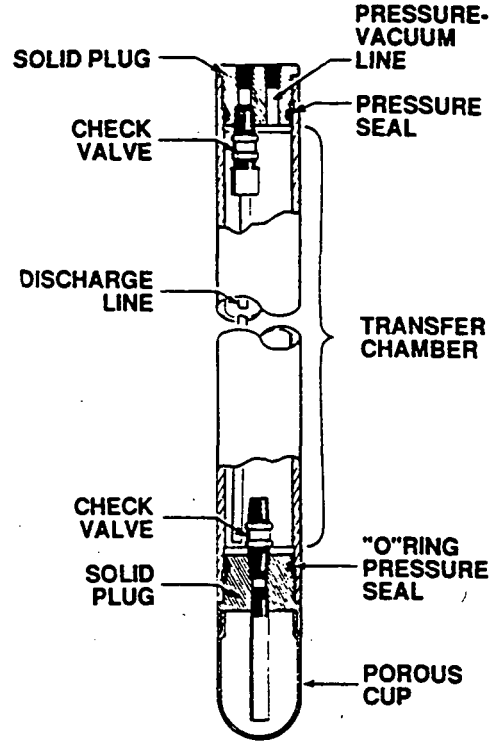

FIG. 9 High Pressure-Vacuum Lysimeter

open to the rest of the samplers, possible damage due to overpressurization or rapid pressurization is still a problem.

7.3.3 *High Pressure-Vacuum Lysimeters (Lysimeters With a Transfer Vessel)*—High pressure-vacuum lysimeters overcome the problems of fluid loss and overpressurization through the use of an attached chamber or a connected transfer vessel (see Fig. 9). The porous segment is usually a porous cup at the bottom of the body tube. The cup is attached with epoxy adhesives (18[7]) or with "V" shaped flush threading sealed with an "O" ring (25[7]). In the attached chamber design, the body tube is separated into two chambers connected by a one-way check valve. A pressure-vacuum line and a discharge line enter through a two-hole plug at the top of the body tube. The pressure-vacuum line terminates below the plug. The discharge line extends to the bottom of the upper chamber. The transfer vessel design is similar. However, the vessel and body tube are integral components joined by a common double threaded, "O" ring sealed plug containing a check valve. Body tube diameters range from 2.7 to 8.9 cm outside diameter. Total sampler lengths commonly range from 15.2 to 182.9 cm. A threaded top plug allows attachment of casing to the lysimeter. This facilitates accurate placement and provides long-term protection for the tubing lines. The samplers and their components have been made out of the same materials as vacuum lysimeters.

7.3.4 *Suction Lysimeters with Low Bubbling Pressures (Samplers With PTFE Porous Sections)*—Designs are available in each of the three categories described in 7.3.1, 7.3.2, and 7.3.3. The only difference between this group of samplers and the previous three samplers is that PTFE is used for the porous sections of this group of samplers (25[7]). The porous PTFE is attached with "V" shaped flush threading sealed with an "O" ring.

7.3.5 *Filter Tip Samplers:*

7.3.5.1 Filter tip samplers consist of two components: a permanently installed filter tip, and a retrievable glass sample vial. The filter tip includes a pointed end to help with installation, a porous section, a nozzle, and a septum. The tip is threaded onto extension pipes that extend to the surface. The sample vial includes a second septum. When in use, the vial is seated in an adaptor that includes a disposable hypodermic needle to penetrate both the septa, allowing sample to flow from the porous segment into the vial (see Fig. 10). Extension pipes vary from 2.5 to 5.1 cm inside diameter. Vial volumes range from 35 to 500 mL (32[7]).

7.3.5.2 The body of the filter tip is made of thermoplastic, stainless steel, or brass. The attached porous section is available in high density polyethylene, sintered ceramic, or sintered stainless steel. The septum is made of natural rubber, nitrile rubber, or fluororubber (32[7]).

7.3.6 *Experimental Suction Samplers:*

7.3.6.1 Cellulose-acetate, hollow-fiber samplers were described by Jackson et al (33) and Wilson (3). A sampler consists of a bundle of these flexible, hollow fibers (<2.8 μm max pore size) pinched shut at one end and attached to a suction line at the other end. The suction line leads to the surface and attaches to a sample bottle and source of suction in the same manner as a vacuum lysimeter (see Fig. 11). The fibers, that are analogous to the porous sections of vacuum lysimeters, have outside diameters of up to 250 μm (33) Levin and Jackson (34) described similar fibers made from a

Standard Guide
Pore-Liquid

This standard is issue
original adoption or
superscript epsilon

Operational Range (cbar)	Maximum Operation Depth (m)
<80 to 80	<7.5
<10 to 21	<7.5
49 to 5	<7.5
<80 to 80	<7.5
<10 to 21	<7.5
<80 to 80	<7.5
NA to 80	None
<10 to 21	None
<80 to 80	<7.5
<10 to 21	<7.5
<80 to 80	<7.5

1. Scope

1.1 This guide dis
for sampling pore-l
zone). The guide i
include soil co
obtaining sam

1.2 The t
from aque
described
aqueou
collec
desc

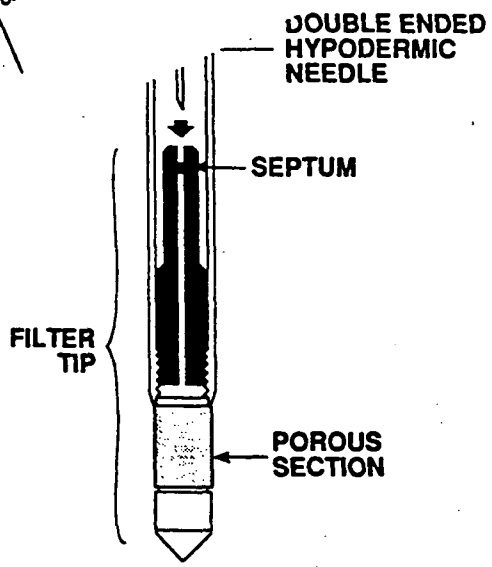

FIG. 10 Filter Tip Sampler

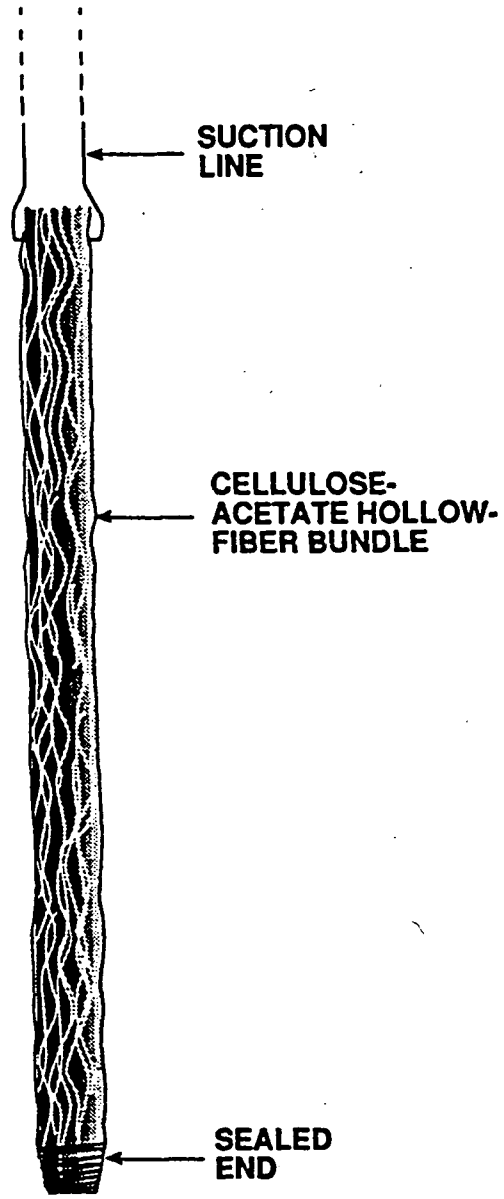

FIG. 11 Cellulose-Acetate Hollow-Fiber Sampler

noncellulosic polymer solution (max pore size <2.8 μm). Those fibers have dense inner layers surrounded by open celled, spongy layers with diameters ranging from 50 to 250 μm.

7.3.6.2 Membrane filter samplers were described by Morrison (1), Everett and Wilson (6), U.S. EPA (12) and Stevenson (35). A sampler consists of a membrane filter of polycarbonate, cellulose acetate (<2.8 μm max pore size), cellulose nitrate or PTFE (2 to 5 μm max pore size); mounted in a "swinnex" type filter holder (35, 36, 37[7]). The filter rests on a glass fiber prefilter. The prefilter rests on a glass fiber "wick" that in turn sits on a glass fiber collector. The collector is in contact with the soil and extends the sampling area of the small diameter filter (see Fig. 12 and 7.5.1.6). A suction line leads from the filter holder to the surface. At the surface, the suction line is attached to a sample bottle and suction source in a manner similar to vacuum lysimeters.

7.3.6.3 A vacuum plate sampler consists of a flat porous disk fitted with a nonporous backing attached to a suction line that leads to the surface (see Fig. 13). Plates are available in diameters ranging from 4.3 to 25.4 cm and custom designs are easily arranged (1, 18[7]). Plates are available in alundum, porous stainless steel (23[7]), ceramic (1.2 to 3.0 μm max pore size) or fritted glass (4 to 5.5 μm max pore size) (38[7], 6, 39, 40, 41, 42, 43, 44). The nonpermeable backing can be a fiberglass resin, glass, plastic, or butyl rubber.

7.3.7 *Comments:*

7.3.7.1 When some ceramic cups are glued to the inner wall of the body tube in a suction lysimeter, an inner lip is formed (45). As the discharge line is pushed through the stopper at the top of the sampler, it may catch on this lip and the operator may conclude that the line has reached the bottom of the ceramic cup (see Fig. 14). As a result, an [illegible] mL error can occur in sampling rate determinations. Th[illegible] mL of fluid accumulates in the cup, is not removed dur[illegible] sampling, and will cause cross contamination between sampling events. Soilmoisture (18[7]) suggested that the line can be

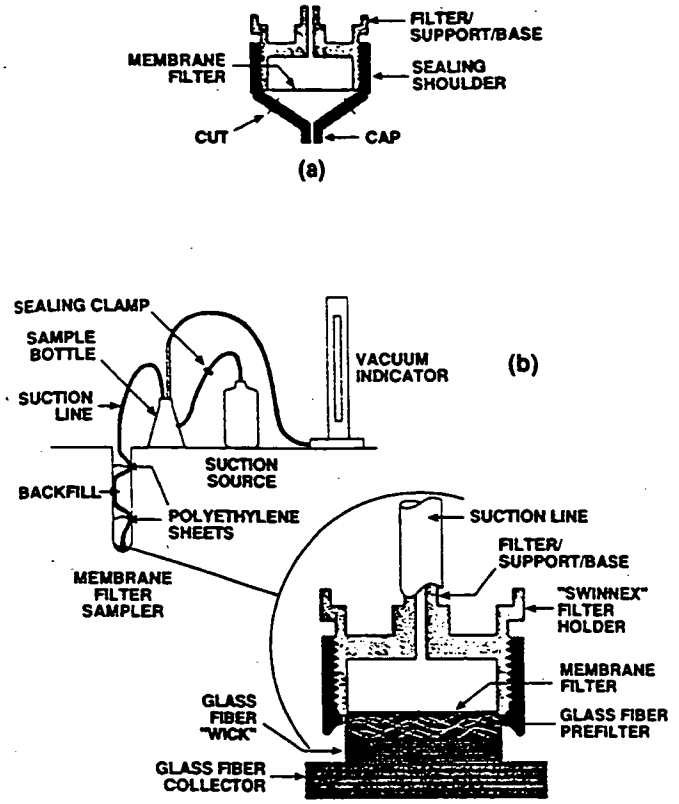

FIG. 12 Membrane Filter Sampler; (*a*) Preparation of Filter Sampler; and (*b*) Installation of Filter Sampler

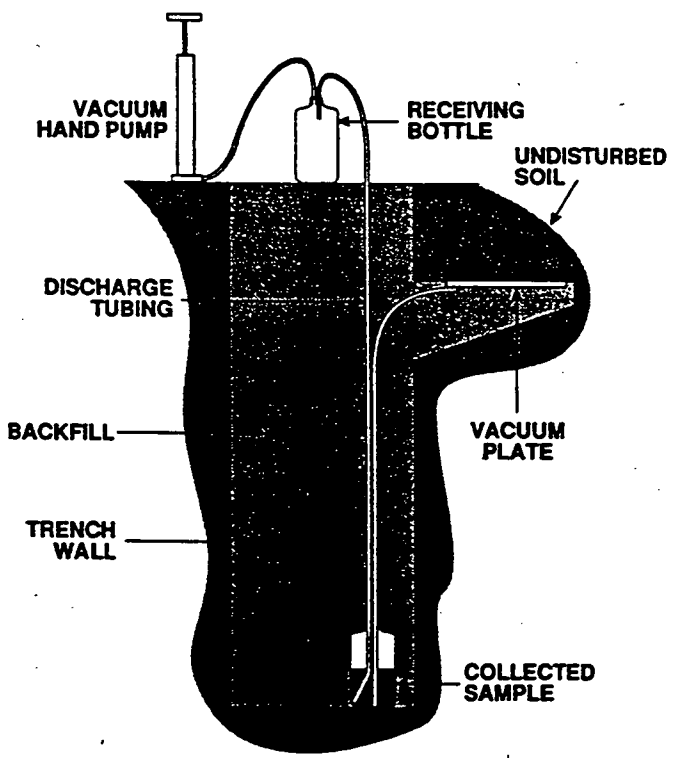

FIG. 13 Vacuum Plate Sampler Installation

kept from catching by cutting its tip at an angle. In all-PTFE suction lysimeters, the discharge line is a rigid PTFE tube

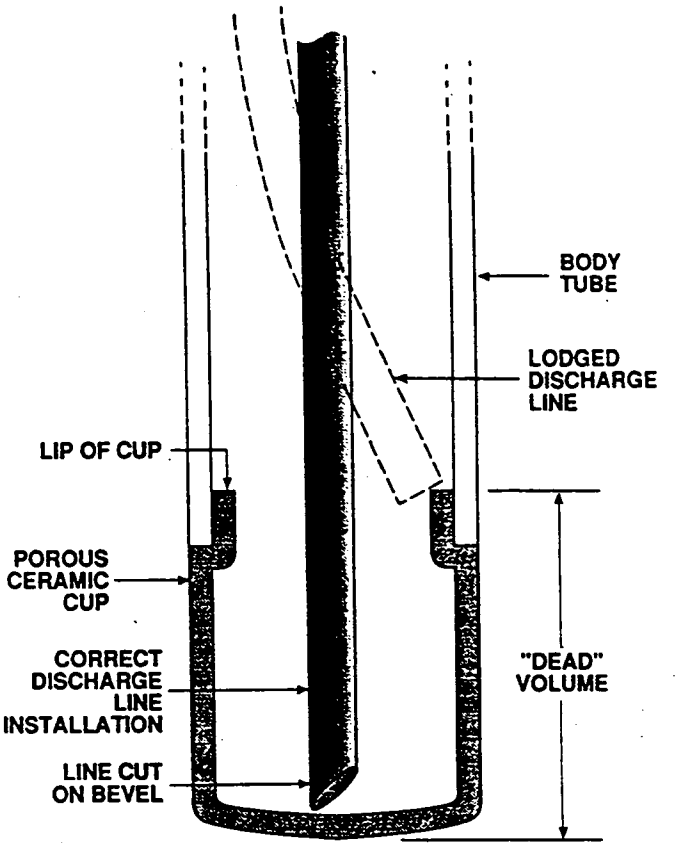

FIG. 14 Location of Potential Dead Volume in Suction Lysimeter

extending to the bottom of the cup. This results in a zero accumulation of fluid. Older samplers with PTFE porous segments and PVC body tubes have a discharge line that does not extend all the way to the bottom. This problem has been corrected in newer PTFE and PVC samplers (25[7]). This results in a 34 mL accumulation of fluid (12). Filter tip samplers develop an 8 mL accumulation of fluid. Haldorsen et al. (46) suggested collecting and discarding an initial sample to purge this accumulated fluid.

7.3.7.2 Because samplers are often handled roughly during installation, durability and ruggedness are important. It has been shown that PTFE has a higher impact strength than ceramics which need to be installed with care (25[7]). It has also been found that PTFE threads and ceramic threads (when used) are susceptible to leakage, and must be securely sealed with pipe threading tape (45). TFE-fluorocarbon (PTFE) tape is not recommended in square threaded joints since the tape is designed for tapered "V" threaded compression joints.

7.3.7.3 As described above, porous sections can be made from various materials. These materials have physical and chemical limitations that must be considered when designing a monitoring program. Physical limitations are described in 7.6.1. Chemical limitations are described in 7.6.2.

7.4 *Installation Methods:*

7.4.1 *Pre-Installation:*

7.4.1.1 As demonstrated by Neary and Tomassini (47), new samplers may be contaminated with dust during manufacturing. In order to reduce chemical interferences from substances on the porous sections, U.S. EPA (12) recom-

mended preparation of ceramic units prior to installation following procedures originally developed by Wolff (48), modified by Wood (49) and recommended by Neary and Tomassini (47). The process involves passing hydrochloric acid (HCl) (for example, 8*N*) through the porous sections. This is followed by flushing with distilled water until the specific conductance of the outflowing water is within 2 % of the inflowing water. Debyle et al (50) found (in agreement with 49 and 51) that flushing with HCl strips cations off of the ceramic. This results in an initial adsorption of cations from pore-liquid onto the ceramic surface. This continues until the cation exchange capacity (CEC) of the ceramic has been satisfied. The effect is not reduced by distilled water flushing after the acid flushing. Therefore, they suggested that the sampler also be flushed, prior to installation, with a solution similar in composition to the expected soil solution. Alternately, the first sample after installation could be discarded (see 7.5.2.1). Bottcher et al (52) attributed increased adsorption of PO_4 to the acid leaching process. Therefore, they recommended a thorough flushing with a PO_4 solution of approximately the same concentration as that found in the soil solution, rather than the acid leaching procedure, when sampling for PO_4. Peters and Healy (53) used H_2SO_4 rather than HCl.

7.4.1.2 Hydrochloric acid may corrode valves within PVC and ceramic high pressure-vacuum lysimeters. Therefore, the porous segment flushing for these designs should be performed prior to attachment if possible. The maximum suction which can be applied is one atmosphere, therefore the flushing process will be slow if suction is used to draw HCl through the porous segment. The flushing can be performed more rapidly if the porous segment is filled with HCl and pressurized to force the acid out of the porous segment since more than one atmosphere of pressure can be applied. This procedure can only be used if the cups are not attached. Care must be taken to prevent overpressurization that might damage the porous section.

7.4.1.3 Corning Laboratories (38[7]) recommended washing fritted glass with hot HCl followed by a distilled water rinse. Cleaning procedures for Alundum have not been reported, although an acid and water rinse procedure similar to that for ceramic would appear to be appropriate (1). Timco (25[7]) described cleaning procedures for PTFE. The method includes passing 0.5 L of distilled water through the material. An I.P.A. bath followed by another in hydrogen peroxide or rinsing with HCl followed by a distilled water rinse.

7.4.1.4 The use of HCl to wash/flush porous segments of lysimeters, that are to be used in sanitary landfills, may cause water quality interpretation problems. Sanitary landfills are notorious generators of methane gas. Reaction of methane with free chloride ion may result in the generation of di- and trichloromethane (also known as methylene chloride and chloroform). Because of the small liquid volumes in lysimeters and the sensitivity of EPA methods (including 601), false positives for one or both of these constituents may occur.

7.4.1.5 Stevenson (35) recommended treating cellulose-acetate hollow-fibers with silver nitrate and sodium chloride to prevent biofilm growths. Morrison (1) suggested rinsing membrane filters with distilled water.

7.4.1.6 The porous section and fittings of individual samplers may have defects that could cause air entr[illegible]ng sampling. Therefore, prior to taking samplers to t[illegible]d, each unit should be checked for its bubbling p[illegible]e, pressure tested and vacuum tested for leaks. Procedures for these tests are given in U.S. EPA (12) and Timco (25[7]). Washers or "O" rings are used to seal the plugs at the tops of body tubes. However, the accesses for pressure-vacuum and discharge lines passing through these plugs are not sealed. These accesses may leak, and should also be sealed. In the past, lubricants have been used when cutting threads into body tubes, porous segments and fittings. In addition, lubricants have been used in various pressure-vacuum pumps. The user should contact the manufacturer to determine if these lubricants are still used. If present, these lubricants should be removed.

7.4.1.7 After cleaning and testing, samplers should be bagged to prevent contamination during transport to the field. Compatibility of bag material and analytical parameters should be considered. Upon arrival at the installation location, and immediately prior to installation, the porous section should be placed in distilled water for about 30 min to ensure saturation of the porous section (1). Timco (25[7]) indicated that applying a suction of about 50 cbar to a submerged PTFE sampler for about an hour would ensure saturation. Finally, immediately prior to installation, the sampler and associated lines should be assembled and inspected for defects (for example, crimped lines).

7.4.2 *Suction Lysimeter and Filter Tip Sampler Installation:*

7.4.2.1 Suction lysimeter installation procedure[illegible] been described by U.S. EPA (12), Soilmoisture (18[7]), [illegible] (25[7]), Linden (54), and Rhoades and Oster (55). Filter tip sampler installation procedures were described by Torstensson and Petsonk (32).

7.4.2.2 The goals of installation are to ensure good hydraulic contact between the porous segment and the surrounding soil, and to minimize leakage of liquid along the outside of the sampler. U.S. EPA (12) recommended a silica flour/bentonite clay method to achieve these goals for suction lysimeters. A silica flour layer (installed as a slurry, see 7.4.2.6) placed around the porous segment increases hydraulic contact with the surrounding soil. Screened native backfill is placed above the silica flour, and a bentonite plug above the body tube prevents liquid leakage down the installation hole and along the body tube (see Figs. 15 and 16). Klute (56) indicated that a screened native soil slurry could be used in place of silica flour for shallow installations.

7.4.2.3 Samplers may be installed in the sidewall of an excavation or, for deeper applications, in a borehole preferably advanced with a hollow stem auger (12). U.S. EPA (12) suggested that suction lysimeters should be installed at an angle of 30 to 45° from vertical whenever possible. This ensures that an undisturbed column of soil is retained above the porous cup. Accordingly, pore liquid samples will reflect flow through pore sequences that have not been disturbed by sampler installation. This angular placement also impr[illegible] the sampler's ability to collect macropore flow. [illegible] installed in the sidewall of a trench, the angled emplace[illegible] is simple (see Fig. 15). However, when installed in a borehole, angular emplacement entails angled drilling.

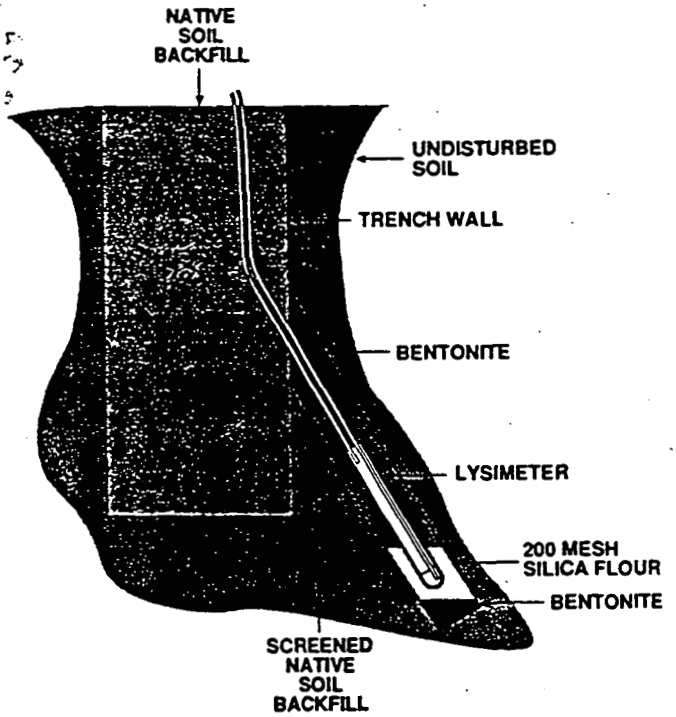

FIG. 15 Pressure-Vacuum Lysimeter Installation in the Sidewall of a Trench

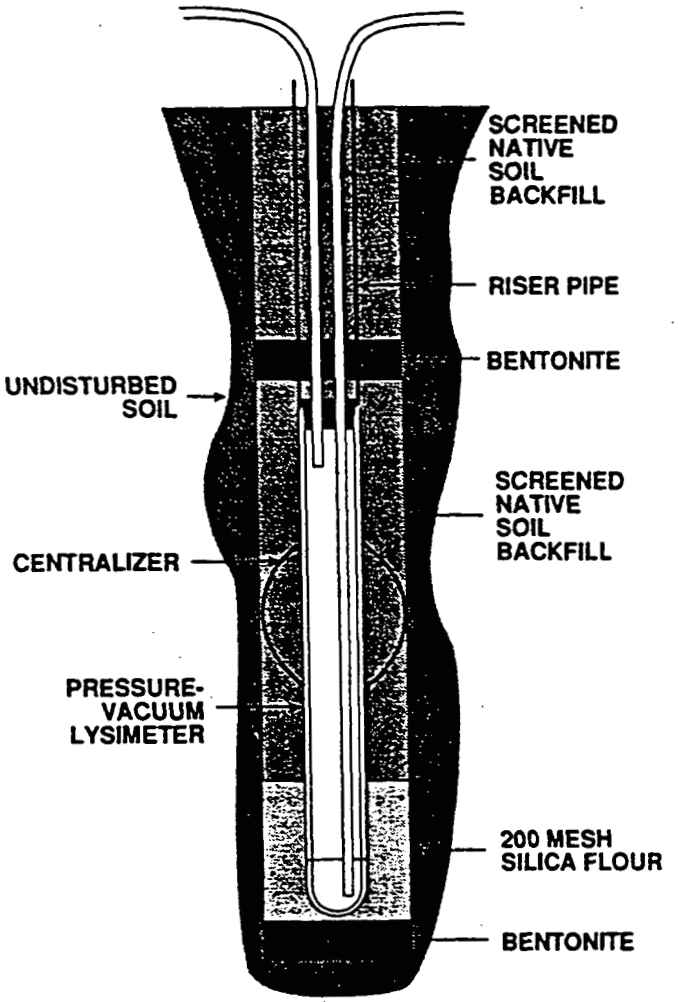

FIG. 16 Pressure-Vacuum Lysimeter Installation in a Borehole

Where soils permit, filter tip samplers can be installed by pushing the filter tip into the ground by applying a static load to the extention pipe (32).

7.4.2.4 When suction lysimeters are installed in a borehole advanced by a drill rig, the hole is usually advanced 15 to 20 cm below the desired location of the porous section. Morrison and Szecsody (30) found that the radius of sampling influence is maximized if the borehole diameter is only slightly larger than that of the sampler and if silica flour pack is used. U.S. EPA (12) recommended that the hole have a diameter at least 5 cm larger than the sampler. Timco (25[7]) recommended that the hole have a diameter at least 8 cm greater than that of the sampler to facilitate installation of the silica flour.

7.4.2.5 Suction lysimeters are preferably lowered into place attached to risers. These protect the lines and ensure exact placement at the desired depth. Centralizers are often used to center the sampler in the hole. Suction lysimeters float in the silica flour that is installed as a slurry. Therefore, the samplers should be installed full of distilled water or held in place by rigid risers.

7.4.2.6 The silica flour slurry (for example 200 to 75 µm mesh opening, silica to distilled water ratio of 0.45 kg to 150 mL) is usually installed using the tremie method (side discharge). Alternately, Brose et al (57) described a method for freezing the silica slurry around the sampler prior to placement. The sampler and frozen pack are then lowered to the sampling location in the borehole. They cited advantages of this technique as including ensurance of proper sampler placement in the flour pack and elimination of pack contamination by soils which slough down the borehole. U.S. EPA (12) recommended filling the borehole to about 30 cm above the suction lysimeter body with the silica. In addition, it was recommended that the powdered bentonite plug placed on top of the silica be about 15 cm thick. The bentonite is also sometimes installed as a slurry, being allowed to hydrate before emplacement. Mixing the bentonite with fine sand at a 1 to 9 ratio, respectively, reduces the potential for shrinking and swelling inherent with pure bentonite (1). The excavated soil should be backfilled above the bentonite in the order in which it was withdrawn. An effort to compact the soil to its original bulk density should be made. When more than one suction lysimeter is installed in one borehole, these procedures are repeated at the various desired sampling depths (see Fig. 17). Care must be taken with these installations to ensure that lines from lower samplers do not interfere with the hydraulic contact of shallower samplers. Designs are available to avert these problems (25[7]).

7.4.2.7 U.S. EPA (12) recommended removal of the water within the sampler and silica slurry after installation. Litaor (58) recommended installation of samplers a year before sampling is to begin, in order to allow them to equilibrate with the surrounding soil. The lines at the surface should be labeled, clamped and housed in locked containers such as valve boxes or casing (1). Methods for cutting and splicing tubing may be found in Timco (25[7]). The user should be careful when using clamps and tubing provided by different manufacturers, inappropriate clamps may damage tubing. Clamps must be restricted to permanently flexible tubing

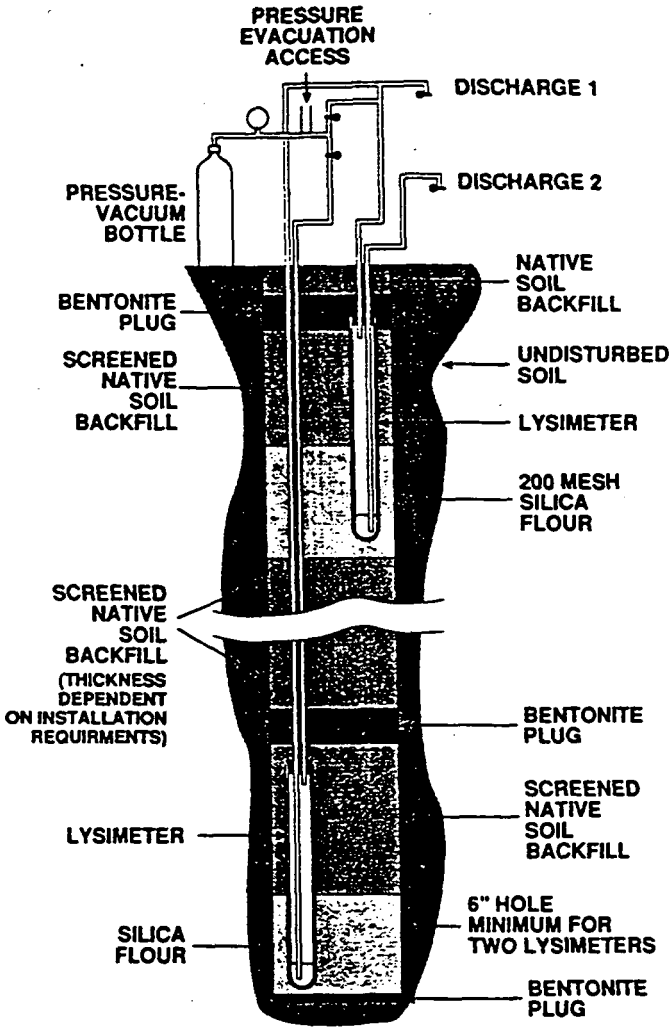

FIG. 17 Multiple Pressure-Vacuum Lysimeter Installations in a Borehole

otherwise stopcocks should be used.

7.4.3 *Experimental Suction Sampler Installation:*

7.4.3.1 Cellulose-acetate hollow-fiber sampler installation procedures were described by Everett et al (9). Membrane filter sampler installation procedures were described by Stevenson (35), Everett et al (9), and Morrison (1). Vacuum plate sampler installation procedures were described by Everett et al (9) and Morrison (1).

7.4.3.2 Cellulose-acetate hollow-fiber samplers have been used almost exclusively in laboratory studies (34). Because the samplers operate on the same principles as vacuum lysimeters, the goals and concerns of installation are similar. Good hydraulic contact between the hollow-fiber and the soil is critical. However, the fibers are too thin and fragile to be pushed into place. Therefore, the fibers must be placed in a predrilled hole (vertical or horizontal). Silkworth and Grigal (59) installed these samplers within a length of perforated, protective PVC tubing filled with soil slurry.

7.4.3.3 Membrane filter samplers are placed in a hole dug to the top of the selected sampling depth. First, sheets of the glass fiber "collectors" are placed at the bottom of the hole. These develop the necessary hydraulic contact between the sampler and the soil. In addition, the "collectors" extend the area of sampling as they cover a larger area than the filter holder alone. Second, two or three smaller glass fiber discs that fit within the filter holder are placed "collectors." Third, the filter holder fitted with a glass prefilter and the membrane filter is placed on top of the "wick" disks. The suction line leads to the surface. Finally, the hole is backfilled (1, 9).

7.4.3.4 Vacuum plate lysimeters are normally installed on the ceiling of a cavity cut into the side of a trench. In order to obtain the necessary contact between the porous plate and the soil, pneumatic bladders, inner tubes, or similar devices are placed beneath the sampler and are used to force it against the cavity ceiling (1). The cavity ceiling is not a smooth surface. Therefore, a layer of silica flour between the plate and the soil is sometimes used to enhance hydraulic contact.

7.4.4 *Maintenance:*

7.4.4.1 The major causes of sampler failure are line damage and leaks (caused by freezing, installation, rodents, etc.), connection leaks, and clogging of the porous material. Freeze damage to the lines can be minimized if the lines are emptied of sample prior to applying a vacuum. Care needs to be taken that the tubing line closure devices are freeze proof.

7.4.4.2 The possibility of line and connection leaks is minimized by rigorously sealing and pressure testing all connections and lines before installation. A common precaution to assist in repairing surface damage to lines is to store excess line below the surface (within the riser pipe when used) when backfilling the borehole. In the event of sev[illegible] lines, an excavation to this buried length allows rest[illegible] of an operational system (1). Lines should be clampe[illegible] when not in use to prevent foreign objects or insects from entering them. The lines should be protected from weather, sunlight exposure, and vandalism with a locked housing. The use of riser pipe around the sampler lines prevents punctures by backfill materials and prevents rodents from damaging the lines.

7.4.4.3 When shallow samplers are used, the ground surface above the sampler should be maintained in a fairly representative state. Large line housings and excessive traffic around the sampler (causing compaction of the soil) will reduce the amount of infiltration in that area. This will affect the representativeness of the pore-liquid samples. Methods to avoid these effects include angled installations, and remote operation of sampler lines.

7.4.4.4 Porous sections may clog as a function of soil composition, type of porous section material, biofilm growth, suction application, and pore-liquid content (1, 17, 20, 50). However, porous section clogging appears to be less severe than once thought (12, 17). Soils and the 200 mesh silica flour filter out fine materials before they reach the porous section (60, 61, 62). Clogging can be further reduced by periodically filling the sampler with distilled water and allowing it to drain out of the sampler. Debyle et al (50) suggested removing shallow samplers on a seasonal basis for flushing with HCl and distilled water. This process re[illegible]s samplers to their original operational and chemical s[illegible] "clogged" lysimeter may be cleaned out by filli[illegible] lysimeter with pure water and applying a pressure of 5 psi for 30 min. However, reinstallation at the same location and

pth does not guarantee resumption of sampling from the ame soil volume.

7.4.4.5 Often no sample is retrieved during a sampling attempt. The first check should be a continuity test of the lines and connections. This test can be done by applying a gentle pressure or vacuum to the V/P line and detecting air movement from the open sample line. This could be due to sampler failure or high pore-liquid tensions. Because of this, it is prudent to install a tensiometer near the sampler at a similar depth. The tensiometer that measures pore-liquid tensions allows the operator to determine if failure to obtain a sample is due to high pore-liquid tensions or due to sampler damage. The tensiometer can also be used to gage the effect of sampling on local pore-liquid flow regimes. Pore-liquid tension should be determined as an initial condition during lysimeter installation.

7.4.4.6 If a tensiometer is not available to measure pore-liquid tensions, the lysimeter can be tested to help determine reasons for failure to recover a sample. The sampler is tested by applying a suction of 80 cbar, and monitoring the decay of suction with time. Figure 18 depicts the various types of suction decay that might be found in a suction lysimeter with a 200 cbar bubbling pressure ceramic section. An almost instantaneous decay of suction is associated with lysimeter leakage. A suction decay over a period of minutes is associated with pore-liquid tensions greater than 200 cbar. Under these conditions, the porous section is desaturated and air enters the sampler. A suction decay over a period of hours reflects normal sample collection. This suggests that failure to retrieve a sample is related to damage of the sample retrieval system (for example, discharge line damage). When suction does not decay, or does so over a period of days, the pressure-vacuum line may be clogged or pore-liquid tensions may be greater than 60 cbar (but less than 200 cbar) causing liquid inflow rates that are too low for sample collection.

7.4.4.7 Morrison and Szecsody (63) described devices that could be used as tensiometers and then converted to pressure-vacuum lysimeters. However, they found that gases entering the devices prevented accurate measurement of pore-liquid tensions. Baier et al (64) described methods for converting tensiometers to pressure-vacuum lysimeters. It would also appear reasonable to convert suction lysimeters to tensiometers. However, Taylor and Ashcroft (65) found that the volume of water drawn from a converted lysimeter into the surrounding soil would significantly affect natural pore-liquid tensions. In addition, they found that the larger porous section of a lysimeter would cause more diffusion of dissolved air into the device, and that the time constant for measurement would be significantly increased over that of a tensiometer. Filter tip samplers can be converted to tensiometers with pressure transducers (32).

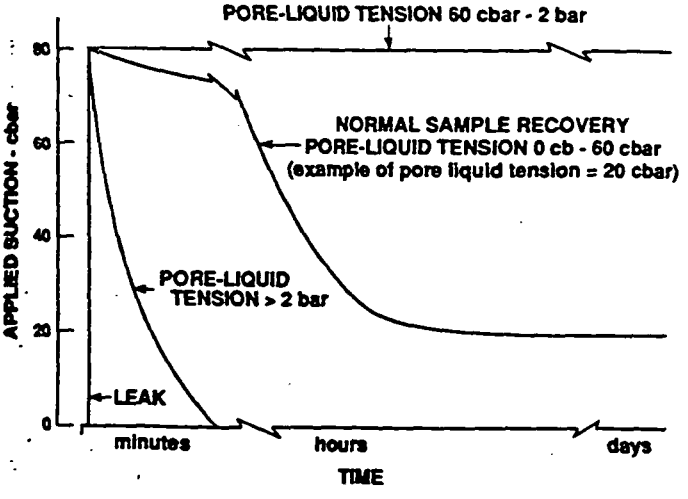

NOTE—Also shown is the almost instantaneous decay associated with an appreciable leak in the instrument.

FIG. 18 Decay Characteristics of Suction Applied to a Two Bar (Bubbling Pressure) Ceramic Cup Lysimeter in Equilibrium With Soils in Varying Ranges of Pore-Liquid Tension

7.4.4.8 Operational lifetimes of suction samplers are dependent on installation, subsurface conditions, maintenance, and sampling frequency. Some samplers have been reported to be operational for as long as 25 years (64).

7.4.5 *Comments:*

7.4.5.1 Vacuum lysimeters and experimental samplers use suction to retrieve samples. Therefore, the maximum sampling depth is limited by the maximum suction lift of water (about 7.5 m) (12). In practice, these samplers are generally used to about 2 m below the surface (12). They are primarily used to monitor near-surface movement of pollutants such as those from land disposal facilities and those from irrigation return flow.

7.4.5.2 Pressure-vacuum lysimeters are generally not used at depths below about 15 m. At greater depths, sample loss and overpressurization problems are considered significant enough to warrant the use of high pressure-vacuum lysimeters that do not have these limitations. High pressure-vacuum lysimeters are not preferred at the shallower depths because they are more expensive. In addition, high pressure-vacuum units have more moving parts than pressure-vacuum units, and as a result, the possibility of failure for the former is higher.

7.4.5.3 As discussed in 7.6, two problems with suction samplers are that they may not sample from macropores (under unsaturated conditions; unless the macropores are directly intercepted) and that their results cannot be used in quantitative mass balance studies. Hornby et al (66) described an installation that could be used to surmount these problems. A barrel-sized casing (for example, 57 cm outside diameter by 85.7 cm high) is placed in a support device and gently pushed into the soil with a backhoe. As the casing is pushed, soil is excavated around it to help with insertion. The process results in an encased monolith of undisturbed soil. The monolith is then rotated and lifted, pressure-vacuum lysimeters are placed in its base, and the bottom is sealed. Subsequently the assembly is placed back into the ground at the monitoring site (see Fig. 19). All fluid draining through the monolith is collected by the samplers. Inasmuch as the boundaries of the system are sealed, the flux of liquid through the system requires maintaining a vertical hydraulic gradient by applying continual suction to the samplers.

7.5 *Operation:*

7.5.1 *Methods:*

7.5.1.1 *Vacuum Lysimeters*—Sampling methods are described by the U.S. EPA (12), by Soilmoisture (18[7]) and by Timco (25[7]). To collect a sample, suction is applied to the sampler, and the suction line is clamped shut. After sample has collected in the body tube, it is retrieved through a

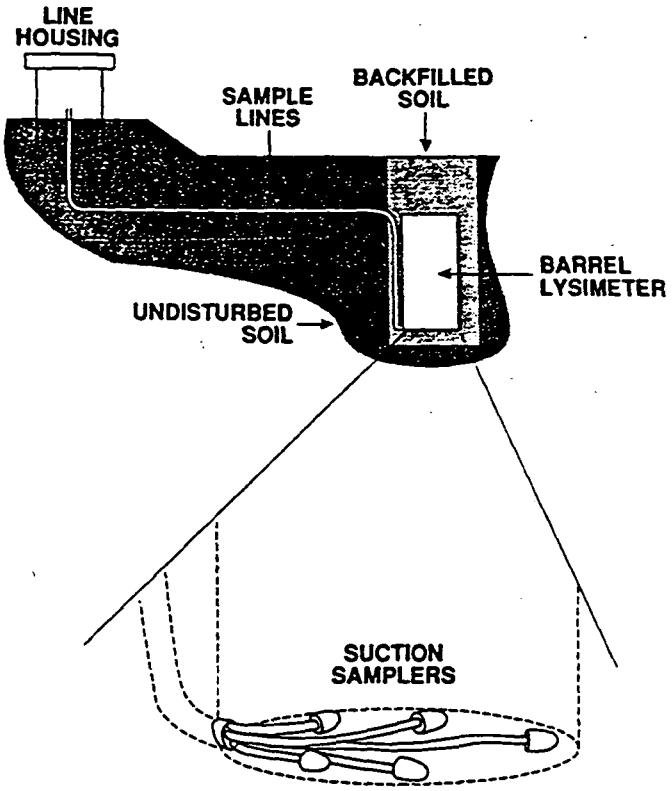

FIG. 19 Barrel Lysimeter

discharge line extending to the base of the porous cup. In shallow installations, with the body tube extending above the soil surface, the discharge line is sometimes inserted and removed as needed. For deeper installations, the discharge line is permanently installed. At the surface, the line is connected to a sample collection flask. Suction is applied to the flask, and liquid is pulled from the sampler, up the discharge line, and into the collection flask. Cole (42) constructed an array of samplers that were attached to a vacuum tank connected to an electric power source. This system allowed remote operation at a constant suction. Wengel and Griffen (67) described methods by which samplers can be connected to a central control board and operated remotely. Brown et al (68) employed a solar panel to power a similar setup. Chow (44) described a sampler that shuts off automatically when the desired sample volume has been collected.

7.5.1.2 *Pressure-Vacuum Lysimeters*—Sampling methods are described in U.S. EPA (12), by Soilmoisture (18[7]) and by Timco (25[7]). To sample, suction is applied to the system via the pressure-vacuum line. The discharge line to the sample bottle is clamped shut during this time. When sufficient time has been allowed for the unit to fill with pore-liquid, suction is released and the clamp on the discharge line is opened. Gas pressure (for example, air or nitrogen; see 7.6.2) is then applied through the pressure-vacuum line. This forces the sample through the discharge line and into the collection flask at the surface (12). A variety of systems have been developed by which the pressure, suction, and sample volume can be controlled remotely or manually (44, 49, 67, 69).

7.5.1.3 *High Pressure-Vacuum Lysimeters (Lysimeters With a Transfer Vessel)*—Sampling methods may be found in U.S. EPA (12), in Soilmoisture (18[7]) and in Timco. When suction is applied to the system, it extends the porous section through an open, one-way check valve at the bottom of the transfer vessel or chamber. A second one-way check valve in the discharge line is closed during this time. As soil solution enters the sampler it is pulled by the suction into the transfer vessel or chamber through a line attached to the open valve at its base. The sample is brought to the surface by releasing the suction and applying pressure (for example, air or nitrogen) through the pressure-vacuum line. This shuts the one-way valve to the porous segment and opens the one-way valve in the discharge line. The sample is then pushed to the surface (12). A variety of systems have been developed to control pressure, suction and sample volume remotely or manually (44, 49, 67, 69).

7.5.1.4 *Suction Lysimeters With Low Bubbling Pressures (Samplers With PTFE Porous Sections)*—Sampling methods for this group of samplers are a bit different than those for the three designs described in 7.5.1.1, 7.5.1.2, and 7.5.1.3. This system is designed to allow the soil pore water extraction process to occur separately from the movement of the collected pore water to the transfer vessel. The only difference is that maximum sampling suctions for these units are much lower (see 7.6.1.3).

7.5.1.5 *Filter Tip Samplers*—Sampling methods may be found in Torstensson and Petsonk (32). Samples are collected by first evacuating the sample vial. The vial is then inserted in the sampling adaptor that contains a two way hypodermic needle. The adaptor is then lowered down an extension pipe. When the adaptor connects with the top of the filter tip, the needle penetrates the septa in the vial in the filter tip. Sample then flows through the porous segment and into the sample vial due to the negative pressure in the vial. As sample is collected, the negative pressure in the vial falls towards that of the pore-liquid tension. When these negative pressures are equal, sampling ends and the sample vial is retrieved. The standard sample volume is about 35 mL. However, by connecting several vials in series, sample volumes of up to 500 mL can be obtained.

7.5.1.6 *Experimental Suction Samplers*—Cellulose-acetate hollow-fiber samplers, membrane filter samplers, and vacuum plate samplers are operated using the same general technique as for vacuum lysimeters. Jackson et al (33) sampled from soil columns using cellulose-acetate hollow-fiber samplers subjected to a constant suction of 81 cbar. At this suction, they were able to extract samples for chemical analyses from silty loams with moisture contents ranging from 20 to 50 %. Silkworth and Grigal (59) compared the performance of these samplers to suction lysimeters. They found that cellulose-acetate hollow-fiber samplers fail more often than suction lysimeters. In membrane filter samplers, the "collectors" provide hydraulic contact between the soil and the samplers. Liquid is drawn by capillarity into the "collectors." When suction is applied, liquid flows through the "wick," the prefilter, and finally the membrane filter. The prefilter reduces clogging of the membrane filter by fine soil materials (9). Stevenson (35) recommended using a suction of between 50 and 60 cbar when sampling with membrane filter samplers. A variety of constant suction methods for sampling with vacuum plates are described by Morrison (1).

An advantage of the larger plates is that they have large contact areas with the soil. Therefore, larger sample volumes can be collected in shorter times than with vacuum lysimeters which have porous sections with smaller surface areas.

7.5.2 *Comments:*

7.5.2.1 Nagpal (70) recommended several consecutive extractions of liquids during a sampling event and use of only the last one for chemical analyses. The purpose of this is to flush out cross contaminants from previous sampling periods, and to ensure that any porous segment/soil solution interactions have reached equilibrium. Debyle et al (50) also suggested discarding the first one or two sample volumes when sampling dilute solutions with newly flushed (HCL method) and installed samplers. The purpose of this is to allow cation exchange between the porous segment and the pore-liquid (caused by the HCL flushing) to equilibrate.

7.5.2.2 Factors which affect the volume and source of a pore-liquid sample include the amount of suction applied, the schedule of suction application, the pore-liquid content, the distribution of pore-liquid, the soil grain size distribution, the soil structure, the porous section design, and the porous section age.

7.5.2.3 Samples collected with lower suctions (about 10 cbar or less) tend to come from liquids migrating through soil macropores (1). Samples collected with higher suctions (greater than about 10 cbar) also include fluids held at higher tensions in micropores. The sampler may disrupt normal flow patterns due to the applied suctions. The effects may extend several meters from the sampler although the area nearest the sampler is most disturbed (71, 72, 73). This disturbance causes samples to be averages of the affected flow area rather than point samples (1). Warrick and Amoozegar-Fard (72) developed an approximate analytical equation which can be used to estimate the maximum radius of influence on the flow regime by a suction sampler. Narasimhan and Driess (74) developed a numerical technique to simulate the effects of suction samplers on the pore-liquid regime.

7.5.2.4 Sampling with falling suction produces samples with compositions that are "averages" of the liquids held at the range of tensions applied. Because suctions and therefore inflow rates decrease with time, these "averages" are weighted toward those portions of the samples obtained in early times. Samples collected over prolonged periods (due to slow inflow rates) are "averages" of the liquids fluxing past the sampling region during those times.

7.5.2.5 During wet periods, samplers affect a small volume of soil and pull liquids from a sequence of pores that may include macropores. During dry periods samplers affect a larger volume of soil, draw from micropores because the macropores have been drained, and collect less liquid (75, 76). The net result of this is that sampled soil solutions are "averaged" over different volumes and derived from different pores as a function of the soil moisture content and distribution.

7.5.2.6 Soil textures and pore-liquid tensions control the amount of liquid that can be removed by a sampler and its radius of influence. The slope on the pore-liquid release curve for a sand is greater than that for a clay at low pore-liquid tensions (see Fig. 20). This indicates that there

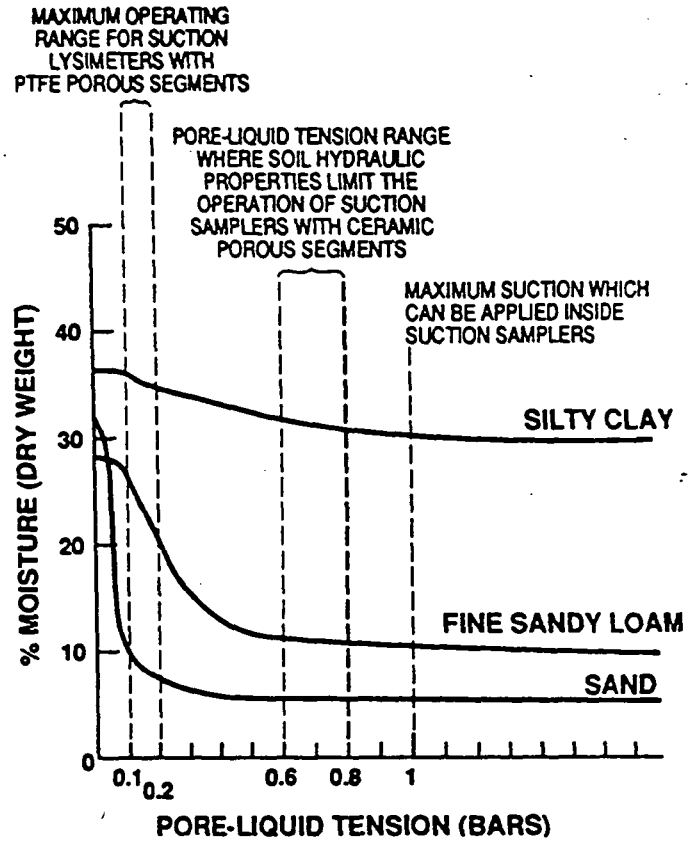

FIG. 20 Water Release Curves for Three Soils, Showing Operating Conditions for Suction Samplers

will be a larger quantity of pore-liquid released from a sand than from a clay for an equal change of pore-liquid tension at these low tensions. At higher tensions, the slope of a clay pore-liquid release curve is greater than that for a sand (see Fig. 20). This indicates that more pore-liquid will be released from a clay than from a sand for an equal change in pore-liquid tension at the higher tensions. A consequence of this is that suction samplers may not obtain samples from coarse grained soils at higher pore-liquid tensions. Morrison and Szecsody (30) found that (under the conditions of their study) radii of influence for suction lysimeters ranged from 10 cm in coarse soils up to 92 cm in fine grained soils.

7.5.2.7 Hansen and Harris (20), demonstrated that intake rates may vary substantially due to variability in the ceramic sections from one manufacturer's batch to another. As discussed in 7.4, the intake rate of a sampler is also a function of the degree of clogging. As discussed in 7.6, the range of pore-liquid tensions over which a sampler can operate is a direct function of the maximum pore size of the porous section and the surrounding silica flour pack. Finally, Morrison and Szecsody (30) found that the radius of influence of a sampler increases with the diameter of the porous section.

7.5.2.8 Because of these factors the following recommendations have been made for sampling with suction lysimeters. Hansen and Harris (19), suggested using uniform initial suctions, short sampling intervals, and uniform sampling times for different sampling events and locations to increase the uniformity of samples. Debyle et al (50) also recommended sampling with uniform suctions that do not

significantly exceed the tension at which the percolating soil solution is being held. U.S. EPA (12) suggested sampling after infiltration events such as rain storms, spring melts, or irrigations as these periods of high pore-liquid content are accompanied by higher pore-liquid flow rates and contaminant transport. For sampling these events, it is useful to install samplers at interfaces between coarse and fine materials to take advantage of any liquid perching which might occur. Silkworth and Grigal (59) recommended using samplers with large diameter ceramic porous sections (as opposed to small diameter ceramic samplers, or hollow cellulose fiber samplers) since they showed less of a tendency to alter the pore-liquid, they had lower failure rates, and they collected larger sample volumes. These recommendations were reinforced by van der Ploeg and Beese (73) who concluded that samplers with large cross sectional area porous sections used with low extraction rates (suctions approaching those of the pore-liquid tensions) reduce the effects of sampling on compositions of samples. Finally, U.S. EPA (12) recommended that porous section material types be carefully chosen based on pore-liquid tensions expected in the sampling area. Operational ranges of various porous section types are discussed in 7.6 and are presented in Table 1.

7.6 *Limitations:*

7.6.1 *Physical Limitations:*

7.6.1.1 The most severe constraint on the operation of suction samplers involves soil around the porous sections becoming so dry (and pore-liquid tensions so high) that samples cannot be collected. The limiting factors in these conditions will be the porous segment or the soil hydraulic properties. For porous segments with bubbling pressures less than 60 cbar (for example, PTFE), the porous segment will be the limiting factor because the high suctions required to move liquids into the samplers will cause meniscuses in the porous segments to break down and air to enter. Soil hydraulic properties will be the limiting factors for porous segments with bubbling pressures greater than 60 cbar (for example, ceramics) because unsaturated hydraulic conductivity of the soil and pressures gradients across the porous segments will be so low (due to high pore-liquid tensions) that flow into the samplers will be negligible.

7.6.1.2 The maximum suction that the saturated porous section of a sampler can withstand before air enters is a function of the pore configuration and size, and its hydrophilicity/hydrophobicity (see Appendix X1 and (65)). The following variation of the capillary rise equation (8, 12, 18, 77) combines these factors:

$$P_b = \frac{-2\delta \cos\alpha}{r}$$

where:

P_b = bubbling pressure (gage), units – FLT^{-2},

δ = surface tension between pore-liquid and air, units – FT^{-1},

α = contact angle between the liquid and the material of the porous segment, D, and

r = maximum pore radius of the pore segment, units – L.

This equation shows that the bubbling pressure decreases with increasing contact angle and with increasing maximum pore radius. The maximum sampling suction that can be applied is 100 cbar (1 atmosphere). For a hydrophilic material (that has an acute contact angle) the maximum pore size that will allow the application of 100 cbar of suction is 2.8 µm. For a hydrophobic material (that has an obtuse contact angle) a smaller pore size will be required (65). The maximum pore sizes of presently available ceramics (that are hydrophilic) used for suction lysimeters and filter tip samplers vary from 1.2 to 3 µm (as measured by the bubbling pressures) (18[7], 45, 78[7]). The maximum pore sizes of cellulose-acetate hollow-fibers and membrane filters range from less than 2.8 µm and 0.4 to 5.0 µm respectively (1, 35, 36). These pore sizes result in maximum sampling suctions near 100 cbar. Therefore, these materials will not allow air to enter during sampling, and the limiting factors will be the soil hydraulic properties. The combination of soil limiting effects result in negligible sampling rates when pore-liquid tensions are above 60 cbar (for coarse grained soils) to 80 cbar (for finer grained soils) (45). At tensions above these levels, inflow rates are too low to allow sampling.

7.6.1.3 The maximum pore sizes of presently available porous PTFE segments for suction lysimeters range from about 15 to 30 µm (calculated from bubbling pressures) (25[7]). These pore sizes allow maximum sampling suctions of about 10 to 21 cbar (25). The hydrophobicity of PTFE will further reduce the magnitude of the maximum sampling suction. Applied suctions of greater than 10 to 21 cbar (or less) will cause air to enter, and sampling to cease. Because a suction greater than 10 to 21 cbar cannot be applied to these samplers, pore-liquids held at tensions greater than 10 to 21 cbar cannot be sampled with these devices. Because of PTFE will be the limiting factor when it is used for the porous segment. A consequence of the small suction range available to PTFE porous sections is that only very moist soils approaching saturation may be sampled (17).

7.6.1.4 The silica flour pack, that has smaller pore sizes than PTFE, can act as an extension of the porous segment, and may extend the range of suctions that can be applied to the sampler. Everett and McMillion (45) found that the pack extended the suction range of earlier, larger pore size PTFE (70 to 90 µm) from less than 4 to 7 cbar. Timco (25[7]) suggested that the operational range of the presently available PTFE samplers (15 to 30 µm) can be extended from 10 to 21 cbar to between 61 to 71 cbar when "properly" installed within a silica flour pack (this has not been verified in peer reviewed literature). For this to be true, the silica flour pack must be able to remain saturated over the range of applied suctions. However, the results of Everett and McMillion (45) suggest that the bubbling pressure of the silica flour pack is only 7 cbar. Trainor (27) found that even if these samplers are "properly" installed, air may still enter if applied suctions exceed pore-liquid tensions by more than 30 %. Pore-liquid tensions are not always known, and technicians may not carefully control applied suctions. In addition, pressurization of pressure-vacuum lysimeters for sample retrieval appears to damage the silica flour pack (27, 28). Thus, dependency on the silica flour pack to provide needed suction range is an extremely limited option. Because of this, suction lysimeters with PTFE porous sections are limited to near saturated sampling and have been classified separately (see Fig. 20).

7.6.1.5 Samples can be collected (using ceramic porous sections) from clays with high pore-liquid tensions (approaching 60 to 80 cbar). However, because liquid inflow rates are low at higher tensions, the amount of time required to collect sufficient sample volumes may exceed the maximum allowable holding time for many chemical analyses. Law (76) pointed out that when soils have liquid contents that allow little or no sample collection (high pore-liquid tensions), there is little or no liquid movement in the soil. Consequently, there will be little or no contaminant migration. If samples of pore-liquids held at tensions above 60 to 80 cbar are desired, soil core sampling with subsequent laboratory liquid extraction may be used (76). However, Law (76), and Brown (79) concluded that results from the two sampling methods are not comparable. Liquid from soil core samples will include constituents that are held at tensions greater than 60 to 80 cbar and that would not be picked up by suction samplers. Because of this and because samples removed from soil cores may include some of the constituents from the soil itself (for example, cations preferentially adsorbed in electrical double layers) or sorbed organics, Law (76) concluded that soil cores are more conservative estimators of cation contaminant presence in soil. Brown (79) concluded that organic contaminant concentrations derived from soil cores and pore-liquid samplers are not comparable because of preferential sorption of some compounds. Amter (80) developed an alternative to extraction of samples from soil cores. The method involves injecting a chemically blank fluid through an existing lysimeter. After a time, the fluid (now containing dilute pore-liquid) is recovered through the sampler and analyzed. The results, although qualitative, were shown to correlate well with known relative pore-liquid constituent concentrations.

7.6.1.6 Suction samplers may not intercept macropores because of the small size of their porous sections. Because of this, they may miss the majority of flow at high moisture contents in structured soils (81). The ability to intercept this flow can be enhanced by installing the samplers in large diameter silica flour packs. However, this involves drilling larger holes. Because suction samplers only sample when suction is applied, they may miss infiltration events unless a constant suction is applied. Therefore, under conditions of high moisture content in structured soils, free drainage samplers are recommended (see Section 8) (81). Pore-liquid composition changes with time. Because suction samplers sample over an extended period (especially in drier soils), the resulting sample should be considered an average of the total flux past the sampler during the sampling interval.

7.6.1.7 A major factor limiting the operation of shallow suction samplers in cold climates is that pore-liquid may freeze near the porous segments. In addition, liquid may freeze within porous segments and lines, preventing sample retrieval and perhaps fracturing the sampler during ice expansion. Because of this, lines should be emptied before the onset of cold weather. Additionally, some soils tend to heave during freezing and thawing. Consequently, the samplers may be displaced in the soil profile, resulting in a break of hydraulic contact (12).

7.6.2 *Chemical Limitations:*

7.6.2.1 The inherent heterogeneities of unsaturated pore-liquid movement and chemistry limit the degree to which samples collected with suction samplers can be considered representative. This is because the small cross sectional areas of suction samplers may not adequately integrate for spatial variability in liquid movement rates and chemistry (51, 82, 83). Biggar and Nielsen (84) suggested that results of analyses from suction lysimeter samples are good for qualitative comparisons, but that they cannot be used for quantitative analysis unless the variabilities of the parameters involved are established. Law (76) came to similar conclusions, stating that results from suction lysimeter sampling could not be used for quantitative mass balance studies.

7.6.2.2 Well structured soils have two distinct flow regions including macropores (for example, cracks, burrows, and root traces) and micropores. Under saturated conditions, liquids move more rapidly through macropores than through micropores. Because of this, the movement of liquid-borne pollutants into the finer pores may be limited. Consequently, pore-liquids in macropores may have different chemistries than those in micropores (85). This is enhanced by the fact that oxygen content in macropores can change in a matter of hours during an infiltration event, whereas micropores may remain suboxic regardless of flow conditions (75). In addition, micropores are less susceptible to leaching than macropores (1, 86, 87, 88). Because of these differences, sample chemistry can vary widely from location to location and from time to time depending on the amount of liquid drawn from these two flow systems.

7.6.2.3 Suction samplers may affect pore-liquid chemistry as it is being sampled. The major sampler related factors that can affect the sample chemistry are the porous segment material and sample storage time. The degree of chemical interaction may also be affected by the amount of porous section clogging (1). Clogging slows the rate of flow through the porous section so that contact time and chances for chemical interaction are increased (50). In addition, the types of adhesives used to attach porous segments (for example, epoxy) may alter the pore-liquid chemistry.

7.6.2.4 Interactions between porous materials and liquid can include sorption, desorption, cation exchange, precipitation (for example, ferric precipitation), and screening (20). These interactions can also occur with all other parts of the samplers that the samples contact. However, the much higher surface area of pores within porous segments makes them the most critical element chemically. Table 2 presents the results of a literature review for porous section/pore-liquid interactions. An attempt has been made to document the pertinent features of the listed studies. However, the reader should refer to the original papers to determine if experimental techniques are applicable to the situation of interest. The absence of entries for a constituent relative to a material does not infer absence of interactions. Although studies for membrane filter interactions have been performed, the results have not been included in Table 2. This is because membrane filters are made from a variety of materials that have differing chemical characteristics (36).

7.6.2.5 Suarez (89) showed that the pH of a sample may be affected by 0.28 to 0.44 pH units due to CO_2 degassing during sampling. He reduced this error by reducing the gas-liquid ratio in the sampler, and by flushing several sampler volumes of soil solution through the sampler before collecting a sample. Alternately, Suarez (89) developed a

TABLE 2 Porous Material Interactions[A,B]

	Material Sorbs Species	Material Desorbs Species[C,D]	Material Screens Species[C,D]	No Significant Interaction[C,D]	No Interaction
Al	...	C(2)	...	C(16)	...
		A(14)	...	A(14)	...
Alkalinity	...	...	...	SF(11)	...
Ca	...	C(1,2,18)	...	C(3,6,10,11,25)	PTFE(13)
		CAF(18)	...	PTFE (3)	...
		A(14)	...	A(3)	...
				FG(18,22)	...
				CAF(10)	...
C	...	FG(22)	...	...	...
CO3	...	C(2)	...	...	...
HCO3	...	C(2)	...	...	...
Cd	C(11)	...	...	C(3)	...
			...	PTFE(3)	...
			...	A(3)	...
Cl	...	...	...	C(11,25)	PTFE(13)
			...	SF(11)	...
Cr	C(19)	C(3)	...	...	...
		PTFE(3)	...		...
		A(3)	...		...
Cu	C(11)	C(3)	...	A(3)	...
		PTFE(3)	...		...
Fe	C(11)	PTFE(3)	...	C(3,25)	PTFE(13)
		A(3)	...	A(14)	...
H	...		...	SF(11)	...
K	C(5,6,15)	C(18)	...	C(1,25)	...
		A(14)	...	CAF(18)[E]	
			...	FG(18,22)	...
Mg	C(6)	C(2,3,11,18)	...	C(10,25)	PTFE(13)
		A(3,14)	...	PTFE(3)	...
		CAF(18)	...	CAF(10)	...
			...	FG(18,22)	...
Mn	C(11)	A(3)	...	C(3)	PTFE(13)
			...	PTFE(3)	...
			...	A(14)	...
Na	C(6)	C(2,18)	...	C(1,11,25)	PTFE(13)
		A(14)			
		CAF(18)			
		FG(18,22)			
NH4	C(4,12)		...	PTFE(4)	...
N	...	FG(22)	...		...
NO2	...	...	...	C(4,5)	...
	...	...		PTFE(4)	...
NO3	...	...	...	C(4,8)	...
	...	...	CAF(10)	PTFE(4)	...
NO3-N	...	...	C(10)	...	...
	...	...	CAF(10)		...
(NO2+NO3)–N	...	...	...	C(5)[F]	
P	C(1,5,8,15,18)	...	...	CAF(18)	...
		...	...	FG(18)	...
PO4	C(4,5,7)	...	...	PTFE(4)	...
		...	...	CAF(10)	...
PO4-P	...	...	...	C(10)	...
	...	...	...	CAF(10)	...
Pb	...	...	...	...	PTFE(13)
SiO2	...	C(2)	...	...	...
Si	...	...	...	C(4)	...
	...		...	PTFE(4)	...
SO4	...	...	...	C(11)	...
Sr	...	C(11)	...	...	...
Zn	...	C(11)	...	...	PTFE(13)
High Molecular Weight Compounds	...		C(17,21) CAF(10)	...	...
4-nitrophenol	PTFE(23)	...	...	...	...
Chlorinated hydrocarbons	PTFE(23,24)	...	...	...	...
Diethyl phthalate		...	...	PTFE(23)	...
Naphthalene	PTFE(23)	...	...	...	...
Acenaphthene	PTFE(23)	...	...	...	...

model by which pH values could be corrected. He noted that multichamber samplers had minimal pH errors and that pH corrections due to CO_2 degassing were not necessary. Peters and Healy (53) found that there was no significant change in

References and Notes on Experimental Techniques[G]

Reference Number in Table	Cited Reference	Porous Section was Washed	Results are a Function of Several Factors	Dilute Solutions were Tested	Experiments were Performed on Nonporous Materials
1	Ref (137)	X	...	...	...
2	Ref (48)	X	...	...	...
3	Ref (93)	X	...	...	...
4	Ref (138)	X	...	...	...
5	Ref (139)	...	X	...	...
6	Ref (50)	X	X	...	...
7	Ref (52)	X	...	...	...
8	Ref (19)	X	...	...	...
9	Ref (56)	...	X	...	...
10	Ref (34)	...	...	X	...
11	Ref (53)	X	...	...	...
12	Ref (69)	...	...	...	...
13	Ref (1)	X	...	...	...
14	Ref (47)	X	X	X	...
15	Ref (139)	X	...	...	...
16	Ref (58)	...	X	...	...
17	Ref (76)	...	...	...	...
18	Ref (59)	X	X	...	...
19	Ref (75)	...	X	...	...
20	Ref (140)	X	...	...	...
21	Ref (57)	...	...	...	...
22	Ref (36)	X	X	...	...
23	Ref (142)	...	X	X	X
24	Ref (143)	...	X	X	X
25	Ref (17)	X	X	...	...

[A] Abbreviations:
C = porous ceramic,
PTFE = porous PTFE,
A = porous alundum,
CAF = cellulose-acetate fibers,
FG = fritted glass or glass fibers, and
SF = silica flour.

[B] Comparisons of materials based on this table should be made cautiously. Differing experimental techniques should be considered as a source of differing conclusions. Undocumented factors often include material age and sampling history.

[C] Numbers in parenthesis refer to references cited in the second part of this table. This is indicated by (2).

[D] Valence states are often not reported in studies. This is indicated by (3).

[E] Reference (59) found that there is no significant interaction of cellulose-acetate fibers with potassium in solution. The porous section was washed prior to testing and results were found to be a function of several factors.

[F] Reference (139) found that there was no significant interaction of porous ceramic with nitrate plus nitrite nitrogen in solution. The results are a function of several factors.

[G] Absence of information on experimental techniques means that the techniques were not specified in the citation.

pH due to CO_2 degassing during long sampling times, although they recognized that pH changes could occur when the solution is originally more acidic than that which they tested. Ransom and Smeck (90) and Anderson (75) suggested purging the sampler with N_2 to preserve the subsurface redox states when sampling for redox dependent ions. Filter tip samplers do not use a purging gas, therefore, pore-liquid redox states are preserved in the samples.

7.6.2.6 Nightingale et al (31) indicated that normal suction sampling techniques are not suitable for sampling volatile organic compounds due to potential loss. Wood et al (91) devised a body tube connected to a purging chamber that is in turn connected to a trap packed with resin. Compounds that volatilize during sampling are captured in the trap. Pettyjohn et al (92) described a suitable system for sampling highly volatile organics. However, the reported system was limited to a maximum sampling depth of 6 m and a small sample volume (5 to 10 mL). Torstensson and Petsonk (32) described methods that can be used to collect samples with filter tip samplers that result in no head space in the sample vial and consequently no loss of volatile compounds.

7.6.2.7 A newly forming consensus is that the effects of suction samplers (when properly pre-treated) on sample chemistry of non-dilute solutions are generally less significant than the inherent uncertainties of sampling discussed in 7.6.2.1 and 7.6.2.2 (17, 53, 93).

7.6.3 *Microbial Limitations*—Viruses or bacteria are sometimes monitored in areas where there are livestock lots, leach fields, septic tanks, or sewage sludge spreading plots. However, it has been found that although porous ceramics will allow viruses to pass, they will screen out bacteria (for example, escherichia coli and fecal coliform) (12, 26, 94, 95).

8. Free Drainage Samplers

8.1 Free drainage samplers are classified differently by various authors, depending on the installation methods. Many free drainage samplers are installed in the side walls of trenches and are referred to as trench lysimeters. However, free drainage samplers are also installed in the walls of vertical caissons. The principle behind each of the samplers is essentially the same. However, the materials and construction differ. The general types of free drainage samplers include:

8.1.1 *Pan lysimeters,*

8.1.2 *Glass block lysimeters,*

8.1.3 *Trough lysimeters,*
8.1.4 *Vacuum trough lysimeters,*
8.1.5 *Caisson lysimeters,*
8.1.6 *Wicking soil pore-liquid samplers,* and
8.1.7 *Sand filled funnel samplers.*

8.2 *Operating Principles:*

8.2.1 A free drainage sampler consists of some sort of collection chamber that is placed at depth in the soil. Pore-liquid in excess of field capacity is free to drain through soil (usually through macropores) under the influence of gravity. This gravity drainage creates a slightly positive pressure at the soil-sampler interface causing fluid to drip into the sampler. Hence, these samplers collect liquid from those portions of the vadose zone that are intermittently saturated due to events such as rainfall, flooding, or irrigation. Some free drainage samplers apply a small suction in order to break the initial surface tension at the soil-sampler interface. Samples are retrieved either by accessing the samplers at depth or by drawing samples to the surface through a suction line.

8.2.2 As described in 4.2, suction samplers can also be used to sample free drainage flow. However, the small area of those samplers compared to the spacing of macropores limits their usefulness for this application. As described in 7.4.5.3, Hornby et al (66) developed an installation that includes pressure-vacuum lysimeters within an encased monolith. This enhances collection of macropore flow with these samplers.

8.3 *Description:*

8.3.1 *Pan Lysimeters:*

8.3.1.1 A pan lysimeter generally consists of a galvanized, metal pan of varying dimensions. A copper tube is soldered to a raised edge of the pan. Plastic or vinyl tubing connects the copper tube to a collection vessel. Any liquid that accumulates on the pan drains through the tubing into the vessel (see Fig. 21) (26).

8.3.2 *Glass Block Lysimeters*—Barbee and Brown (81) developed free drainage samplers made from hollow glass bricks. These glass bricks, that are produced for ornamental masonry work, have dimensions of 30 by 30 by 10 cm and have a capacity of 5.5 L. To build a sampler, nine holes, 0.47 cm in diameter, are drilled along the perimeter of one of the square surfaces of a brick. Nylon tubing is inserted into one of the holes to allow for sample removal. The collecting surface is fitted with a fiberglass sheet to improve contact with the soil. Pore-liquid collection is enhanced by a raised lip along the edge of the surface (see Fig. 22).

8.3.3 *Trough Lysimeters:*

8.3.3.1 Trough lysimeters, also known as Ebermayer lysimeters, rely on a trough or pail to collect pore-liquid. In order for the edges of the sampler to maintain a firm contact with the soil, a fiberglass screen is suspended inside the trough. The screen is lined with glass wool and covered with soil until the soil is even with the top of the trough (96).

8.3.3.2 Morrison (1) reported a trough lysimeter in which two parallel metal rods are inside the trough, in contact with the bottom side of the screen, and bent toward the collection tube. Liquid that enters the trough migrates along these rods towards the collection tube in response to capillary forces (see Fig. 23). A modification of this design consists of a metal trough with a length of perforated PVC pipe mounted inside.

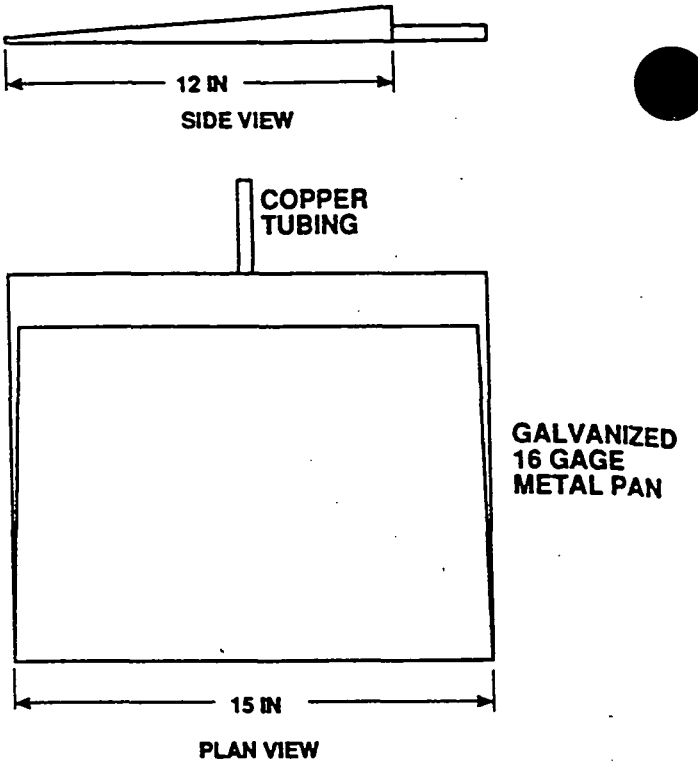

FIG. 21 Example of a Pan Lysimeter

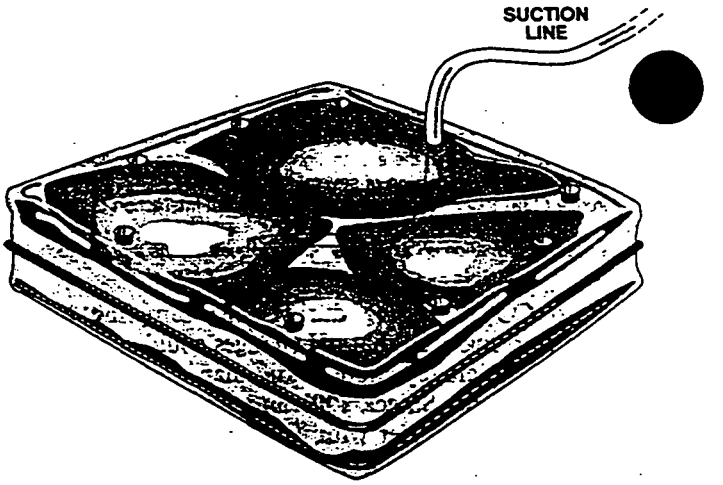

FIG. 22 Glass Block Lysimeter

The trough is filled with graded gravel so that coarse material is immediately adjacent to the PVC pipe and fine sand is at the edges and the top of the trough. The pipe is capped at one end while the other end is connected to a sample container via a drainage tube (1).

8.3.4 *Vacuum Trough Lysimeters*—Montgomery et al (97) described a vacuum trough lysimeter consisting of a metal trough equipped with two independent strings of ceramic pipe, each 13 mm in diameter. The design, otherwise similar to trough lysimeters, allowed extraction of samples under applied suctions of up to 50 cbar. The ceramic pipes act as a vacuum system, and samples are extracted through a suction line.

8.3.5 *Caisson Lysimeters*—A caisson lysimeter consists of

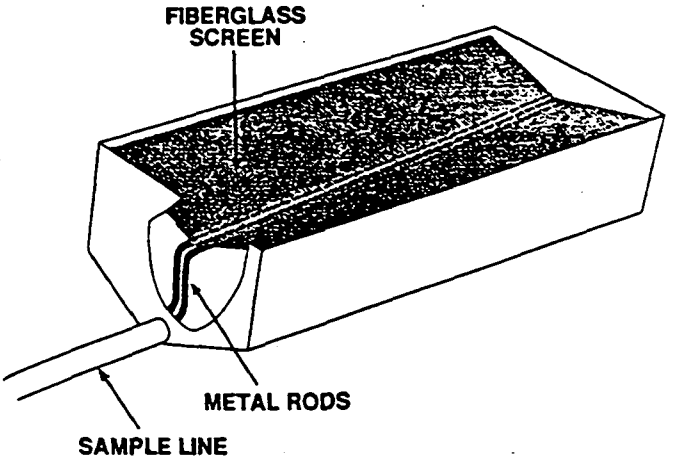

FIG. 23 Trough Lysimeter

collector pipes, radiating from a vertical chamber (1). A design used by Schmidt and Clements (98) consists of a nearly horizontal, half-screened PVC casing (see Fig. 24). Schneider et al (99) designed a similar system consisting of: a 15.2 cm diameter stainless steel tube extending diagonally upward through the caisson wall into the native soil; a screened plate assembly within the tube to retain the soil; a purging system that can be used to redevelop the sampler when it becomes clogged; and an airtight cap that prevents exchange between the air in the caisson and the soil air.

8.3.6 *Wicking Soil Pore-Liquid Samplers*—Hornby et al (66) described a wicking sampler, alleged to combine the attributes of free drainage samplers and pressure-vacuum lysimeters. The sampler collects both free drainage liquid and liquid held at tensions to about 4 cbar. A hanging "Hurculon" fibrous column acts as a wick to exert a tension on the soil pores in contact with a geotextile fiber which serves as a plate covering a 30.5 by 30.5 by 1.3 cm pan. The terminus of the fibrous column is sealed into the cap of a tubular sample collector. The collection tube also contains an inlet pressure-vacuum line and a sample collection tube. Materials for the sample collector depend on the constituents being sampled. Glass and PTFE were recommended materials when sampling for organics (see Fig. 25) (66).

8.3.7 *Sand Filled Funnel Samplers*—K. W. Brown and Associates (100) discussed a sand-filled funnel for collecting freely draining liquid. The funnel is filled with clean sand and inserted into the sidewall of a trench. The funnel is connected through tubing to a collection bottle. Application of suction to a separate collection tube pulls the sample to land surface (see Fig. 26).

8.3.8 *Comments*—The dimensions of the free drainage samplers discussed are purposely left vague. Because the samplers collect fluid flowing primarily through macropores, the dimensions are often dictated on a site-by-site basis by the configurations and spacings of the macropores.

8.4 *Installation Methods:*

8.4.1 *Installation:*

8.4.1.1 Free drainage samplers are commonly installed into the side walls of trenches or caissons. The trenches can be dug either by hand or with backhoes. But they should be stabilized with timbers and siding if deeper than 1.5 m, in order to allow safe access (26) (see Occupational Health and Safety Administration Regulations). All wood used in the construction of permanent trenches should be treated with preservatives to protect it against degradation due to semi-saturated conditions. This may pose a problem when monitoring for organics. Any spaces between the bare trench side walls and the siding are filled with soil and peagravel to allow for free drainage. The excavations should be covered to provide positive surface drainage away from the area. Some free drainage samplers require only temporary excavations for installation. After the samplers have been installed, the excavations are backfilled with native soil.

8.4.1.2 Caissons for housing free drainage samplers are constructed with corrugated culverts or concrete drainage pipes. Schneider and Oaksford (101) installed caissons by excavating soil from within a concrete pipe using a crane operated shovel and manual labor. Each concrete pipe section, weighing 222.5 kN (25 tons), was set in place with a

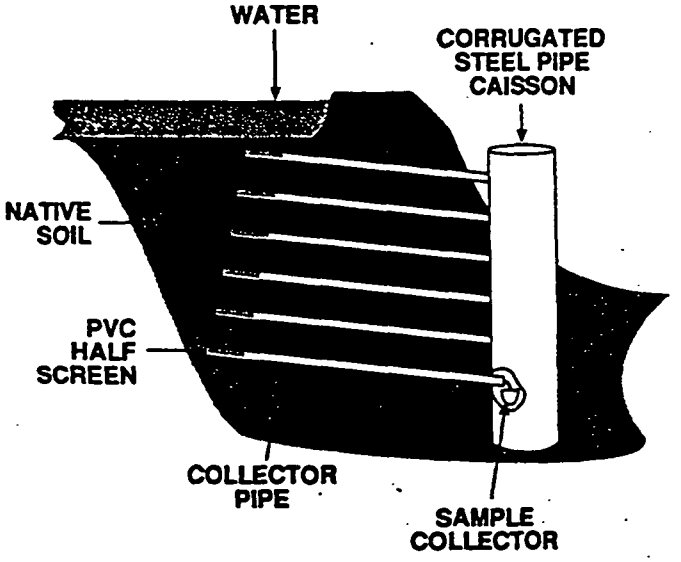

FIG. 24 Example of a Caisson Lysimeter

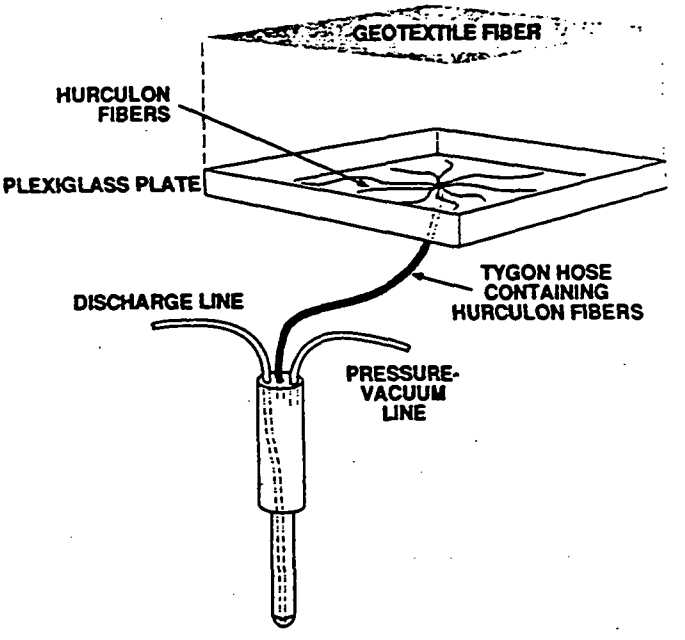

FIG. 25 Wicking Type Soil Pore-Liquid Sampler

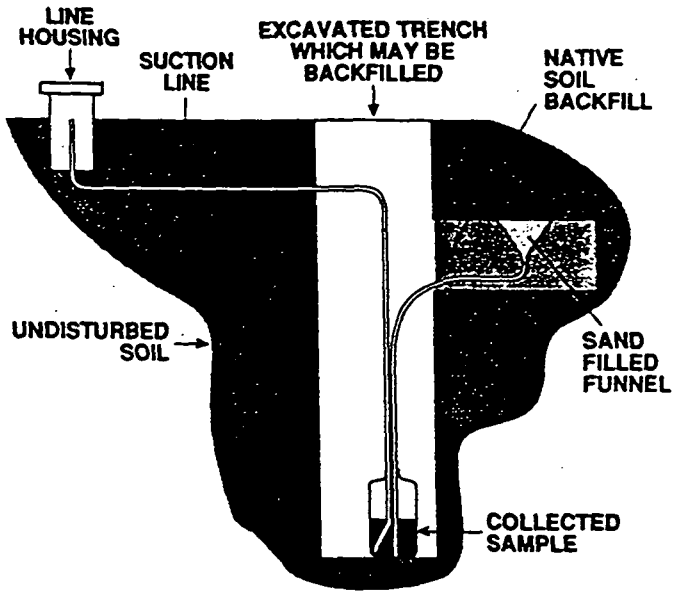

FIG. 26 Sand Filled Funnel Sampler Installation

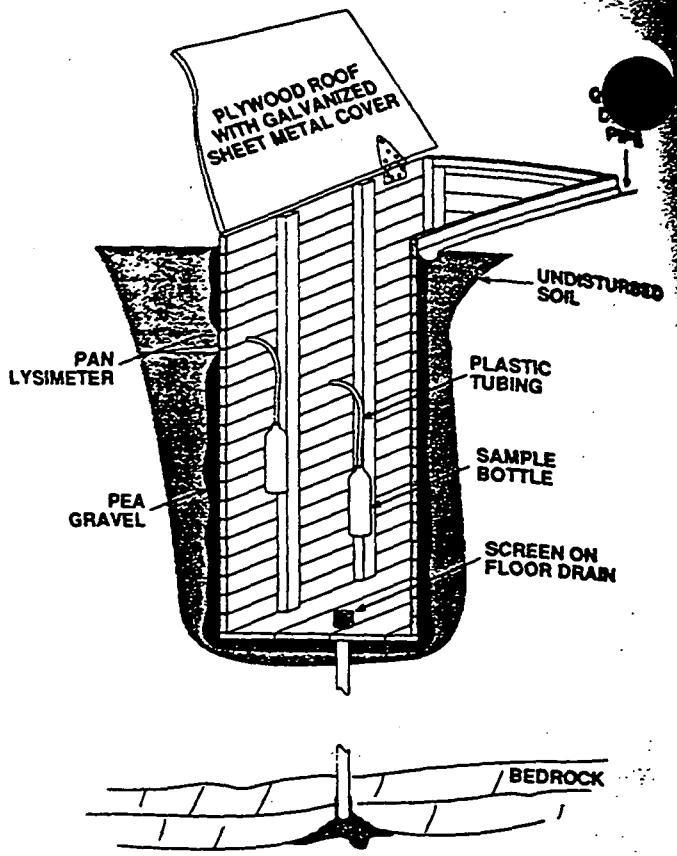

FIG. 27 Example of Pan Lysimeter Installation

crane. As excavation inside the pipe progressed, the pipe advanced downward under its own weight.

8.4.1.3 *Pan Lysimeters*—A pan lysimeter can often be pushed or driven directly into the side wall of a trench. However, if the soil is resistant, an opening for the sampler can be created by hammering a sheet metal blade into the soil profile with a sledge hammer. The pan is placed in the side wall so that it slopes gently toward the trench. Any voids above or below the pan are filled with soil (26). The end of the copper tubing is allowed to project through the trench siding and is connected to plastic tubing and a sample bottle (see Fig. 27).

8.4.1.4 *Glass Block Lysimeters*—A glass block lysimeter is installed in a cavity that is excavated in the side of a trench. Barbee and Brown (81) used a wooden model of the sampler in order to achieve the correct cavity size during excavation. They used a small knife to score the ceiling of the cavity in order to expose any pores that may have been smeared shut during excavation. Care should be taken to keep the ceiling of the cavity smooth and level so that liquids will not run off the upper surface of the glass block. Jordan (96) found that the edges of the sampler had to be in contact with the soil for the entire perimeter of the sampler in order to prevent liquid from running out through any spaces between the soil and the sampler. Level blocks are important so that the majority of the collected sample can be retrieved. However, the inside glass surface is uneven and has "low spots" where residual sample collects between sampling cycles. The glass block is pushed to the end of the cavity and wedges are used to hold its collecting surface firmly against the ceiling of the tunnel. Both the cavity and trench are partially backfilled. Barbee and Brown (81) recommend pressing a sheet of aluminum foil against the wall of the trench, extending below the top of the brick, before final backfilling in order to minimize any lateral migration of liquid from the disturbed portion of the soil profile to the undisturbed portion (see Fig. 28). It should be noted that aluminum foil is often coated with oil.

8.4.1.5 *Trough Lysimeters*—Trough lysimeters are installed in the same manner as glass block lysimeters (see Fig. 28).

8.4.1.6 *Vacuum Trough Lysimeters*—The vacuum trough lysimeter described by Montgomery et al (97) is housed in a box-like structure, with four walls and a floor, but no ceiling. The floor of the structure and the lower portions of the walls are made of steel. The upper portions of the walls are composed of fiberglass coated plywood. A slotted, plastic drain pipe is set 20 mm above the floor of the structure and is surrounded by gravel. The soil profile surrounding the trough lysimeter is reconstructed incrementally in an attempt to recreate natural conditions. The structure is filled with soil in increments of 0.5 m or less. After each increment is added, liquid is piped slowly into the structure through the drain pipe and allowed to drain back out for 24 h before the next increment is added. This working of the soil particles by liquid is believed to produce bulk densities that are fairly representative of the undisturbed conditions. However, soil macropores are not reproduced.

8.4.1.7 *Caisson Lysimeters*—Lateral collectors or free drainage samplers are installed in cavities augered by hand or by power-driven equipment through holes in the caisson walls (see Fig. 24).

8.4.1.8 *Wicking Soil Pore-Liquid Samplers*—These units are installed by the trench and cavity method similar to that for glass block lysimeters (66). A backhoe excavates a trench to the desired depth. A cavity is then dug into the wall of the trench to the dimensions of the sampler. The roof of the cavity is sometimes scarified (depending on the soil type) to remove smearing caused during excavation. The sampler

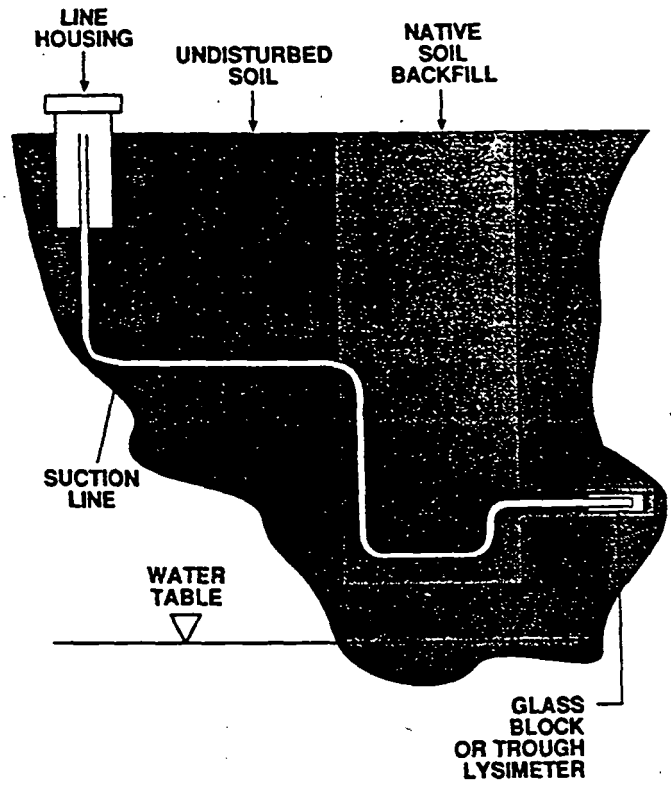

FIG. 28 Example of Glass Block or Trough Lysimeter Installation

is then forced tightly into place to ensure good contact with the roof of the cavity. The cavity is large enough to accommodate the sampler, the hanging wick and the collection tube. The pressure-vacuum line and the sample collection line are extended to the surface. During backfilling of the tunnel and trench, the bulk density of the fill should be equal to or greater than the native soil.

8.4.1.9 *Sand Filled Funnel Samplers*—The installation procedure for these samplers is similar to that used for glass block lysimeters (see Fig. 26).

8.4.2 *Maintenance:*

8.4.2.1 Where samplers are accessed through permanent trenches and caissons, the sampling station must be protected against flooding due to excessive infiltration. Parizek and Lane (26) drilled a floor drain about 27 m through underlying soil into the unsaturated bedrock. This allowed drainage of excess liquid from the floor of the sampling trench, and also decreased the chances of contamination of soil surrounding the structure. Alternately, a sump pump can be used if a drain is not feasible. Parizek and Lane (26) also found that stratified soils intensified lateral flow of pore-liquid, thus aggravating any flooding problems. They concluded that flooding may be a problem in humid areas where more than about 5 cm of liquid per week is applied to the land surface.

8.4.2.2 The ground surface above the sampler should be maintained in a fairly representative state. Large housings and excessive traffic around the sampler (causing compaction of the soil) will reduce the amount of infiltration in that area. This will affect the representativeness of the pore-liquid samples.

8.4.3 *Comments*—A significant advantage of samplers installed in the sidewalls of trenches is that in sufficiently cohesive soils, installation produces no disturbance in the overlying soil. In cohesionless, sandy soils, stable cavities may not be possible. As a result, backfilling of the fallen material may be required. This disturbs the soil profile and macropores are not preserved (97).

8.5 *Operation:*

8.5.1 *Methods:*

8.5.1.1 Since pore-liquid flows into free drainage samplers under the influence of gravity, sampling is a relatively simple procedure. Liquid accumulates in the collection device and then drains through tubing into a sample bottle. The sample can be retrieved either through access to the sampling trench or by pulling it to the surface by a suction pump. The wicking pore-liquid sampler allows the application of a slight suction (4 cbar) to improve sampling. However, this design also has a tendency to clog.

8.5.1.2 Jordan (96) found that surface tension develops in trough lysimeters at the soil-air interface and prevents some of the liquid from entering the collector. Cole (41) addressed this problem by inserting an aluminum oxide disc between the soil and the collection surface, and then applying suction to break the surface tension and draw liquid out of the soil. The problem with this approach is that it requires the soil adjacent to the aluminum oxide disc to be free of roots, cracks, and channels (96). The two parallel rods included in the trough lysimeter design overcome this problem. If one end of the metal rod touches the fiberglass screen, then the surface film of liquid surrounds the rod and the liquid moves down the rod toward the sample container. Two rods, barely touching, facilitate this migration by allowing the liquid to move in response to the capillary forces between them (96).

8.5.2 *Comments*—Under near saturated conditions with macropore flow, free drainage samplers tend to collect larger and more consistent samples than suction samplers. Since free drainage samplers are continuous samplers, they need to be emptied after each infiltration event in order to ensure sample integrity, to prevent sample container overflows, and to prevent cross contamination between hydrologic events (12).

8.6 *Advantages and Limitations:*

8.6.1 *Physical Advantages and Limitations*—A major advantage of free drainage samplers is that they are essentially passive, thus they do not alter pore-liquid flow paths. The major disadvantage of free drainage samplers is that samples can only be obtained when soil moisture conditions are in excess of field capacity. Such saturated conditions usually require constant application of surface liquid, as in the case of agricultural irrigation or at land treatment sites. Under drier conditions, free drainage samplers fail to yield any liquid and suction samplers are required.

8.6.2 *Chemical Advantages and Limitations:*

8.6.2.1 There are both advantages and disadvantages to using free drainage samplers to collect pore-liquid for chemical analysis. A major advantage is that the samplers do not distort natural flow patterns as do suction samplers. Because samples are collected over known areas, quantitative mass balance estimates are possible. Because the samplers are continuous collectors, infiltration events can be sampled without having to go to the field. The major limitation of free drainage samplers is that they cannot sample pore-liquids

held at tensions greater than the field capacity. As with all samplers, analytical parameters/sampler material compatibilities should be considered. As an example, samples collected from pan lysimeters should not be analyzed for copper or zinc, particularly if the pH of the collected fluid is below seven.

8.6.2.2 Free drainage samplers tend to collect pore-liquids that drain rapidly through macropores. Since the residence time of this liquid is less than that of liquid moving under tension, the major ion chemistry appears more dilute than the fluid sampled from unsaturated pores with suction samplers. In some cases, this decrease in residence time in combination with other factors can result in an actual change in the chemical signature rather than just an overall dilution. This is because insufficient time may be available for reactions to occur with soil components that act as chemical sources or sinks (**102**). However, free drainage samplers have large cross-sectional areas and they are cumulative collectors. As a result, they collect samples which average soil heterogeneities and therefore give a more representative picture than suction samplers of chemical movement through wet soil, particularly through well-structured soils (**81**). In addition, the samplers use suction only to retrieve samples. As a result there is less potential for loss of volatile compounds than with suction samplers (**12**).

8.6.3 *Microbial Advantages and Limitations*—Since free drainage samplers do not have the minute openings that porous ceramic suction samplers have, they do not screen out colloidal-sized particles and soil bacteria. Consequently, they yield more representative values for suspended solids or BOD measurements (**26**).

9. Perched Ground Water Samplers

9.1 Perched water occurs where varying permeability layers in the vadose zone retard downward movement of liquid. Over time, liquid collects above lower permeability layers and moisture contents rise until the soil becomes saturated with liquid (**9, 103**). Once soil becomes saturated, wells and other devices normally installed below the water table can be used to collect samples. Separate guides are available for ground water sampling, therefore, the topics are covered briefly, with reference to appropriate documents.

9.2 Sampling perched liquid is attractive because the perching layer collects liquid over a large area. This integration allows samples to be more representative of areal conditions than suction samples (**103**). This also allows the sampler to potentially detect contaminants that may not be moving downward immediately adjacent to the sampler. In addition, larger sample volumes can be collected than those that can be obtained by suction samplers. Everett et al (**6**) and Everett et al (**9**) discussed the incorporation of perched ground water sampling into monitoring programs. There are a variety of systems that can be used. These include the following:

9.2.1 *Point samplers,*
9.2.2 *Wells,*
9.2.3 *Cascading water samplers,* and
9.2.4 *Drainage samplers.*

9.3 *Operating Principles:*

9.3.1 *Point Samplers*—Point samplers are open ended pipes or tubes, such as piezometers or wells with short screened intervals, installed for the purpose of collecting samples from a discrete location in saturated material. Samples are collected by bringing liquid that flows freely into the device to the surface by one of a variety of methods.

9.3.2 *Wells*—A monitoring well is similar to a point sampler except the screened interval is longer. Therefore, samples are averaged over the screened length (**104**). Samples are collected by bringing liquid that flows freely into the well to the surface by one of a variety of methods.

9.3.3 *Cascading Water Samplers*—Cascading water occurs when a well is screened across a perched layer and the underlying water table or when water leaks through casing joints at the perched layer. Because the water table is lower than the perched layer, water flows into the well in the portion open to the perched layer, and cascades downward to the water table. This situation is common in some areas where the practice has been to install water wells with large screened intervals (**105**). Samples are collected by capturing liquid flowing into the well from the perched layer before it cascades down to the water table.

9.3.4 *Drainage Samplers*—Shallow perched systems may spread contamination, cause problems with structures, or interfere with agriculture. Therefore, drainage systems are sometimes installed. These systems usually funnel liquid via gravity flow to a ditch or sump from which it is pumped out. This outflow can be sampled. Typical drainage systems include tile lines or manifold collectors. Depending on the design of the system, it may be possible to sample outflows that drain different areas.

9.4 *Description:*

9.4.1 *Point Samplers:*

9.4.1.1 Point samplers can be installed in separate boreholes or clustered together in one borehole at different depths. Fig. 29 presents different configurations that have been used. Piezometers, that are often used as point samplers, are similar to wells, in that they consist of a small diameter casing open at one end or connected to a short screened interval (**106**). Reeve (**107**), Patton and Smith (**108**) and Morrison (**1**) discussed different designs.

9.4.1.2 Point samplers can be made from a variety of materials including steel, PVC, PTFE, ABS, fiberglass, and additional materials for joints, seals and other components (**106, 107**).

9.4.2 *Wells:*

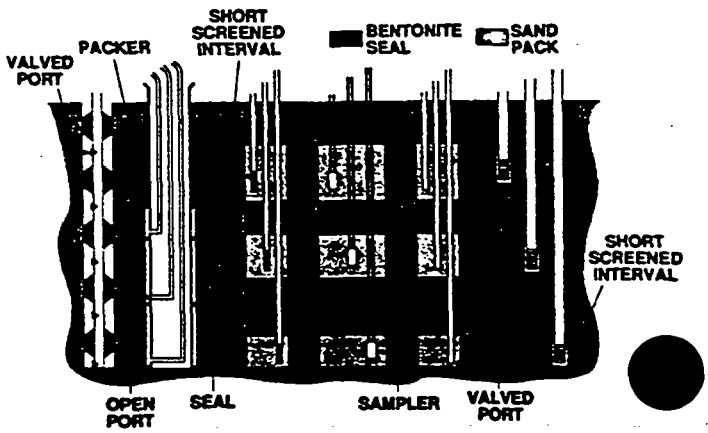

FIG. 29 Examples of Point Sampling Systems

9.4.2.1 Monitoring wells (as depth averaged samplers) are normally installed with one well in each borehole. Components of a well generally include a bottom plug, a length of screen, a length of blank casing, a cap, and a protective cover. Different monitoring well designs are presented in Figs. 30, 31, and 32. Authors who described methods for designing and installing monitoring wells include U.S. EPA (109), Driscoll (110), Gass (111), Keely (112), Minning (113), Richter and Collentine (114), Riggs (115), Riggs and Hatheway (116), Scalf et al (117), Morrison (1), Everett et al (9), Campbell and Lehr (118). Hackett (119, 120) summarized methods for designing and installing monitoring wells with hollow stem augers. Screened hollow stem augers can also be used as temporary wells for sampling (Taylor and Serafini, (121)).

9.4.2.2 Monitoring wells can be made from a variety of materials including steel, PVC, PTFE, ABS, fiberglass, and additional materials for joints, seals, and other components. Details are provided by Barcelona et al (122), U.S. EPA (109), Morrison (1) and many of the references listed above.

9.4.3 *Cascading Water Samplers:*

9.4.3.1 Cascading water is most often seen in production wells in areas with extensive ground water pumpage. Samplers simply consist of a bucket or bailer lowered to a point below the inflow of cascading water. Wilson and Schmidt (103) described methods for developing cascading water samplers (see Fig. 33).

9.4.3.2 Cascading wells differ from other wells only by the way in which water flows into them. Otherwise, the materials used for these wells are identical to those used for other types of wells. Bailers or buckets used to collect samples are also available in steel, PVC, PTFE, acrylic and other materials.

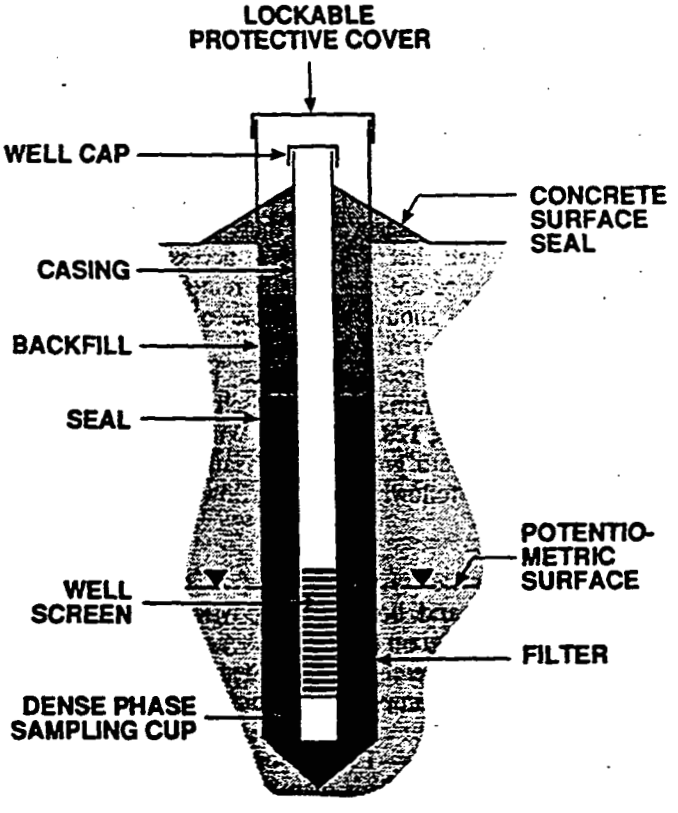

FIG. 30 A Monitoring Well With the Uppermost Ground-Water Level Intersecting the Slotted Well Screen

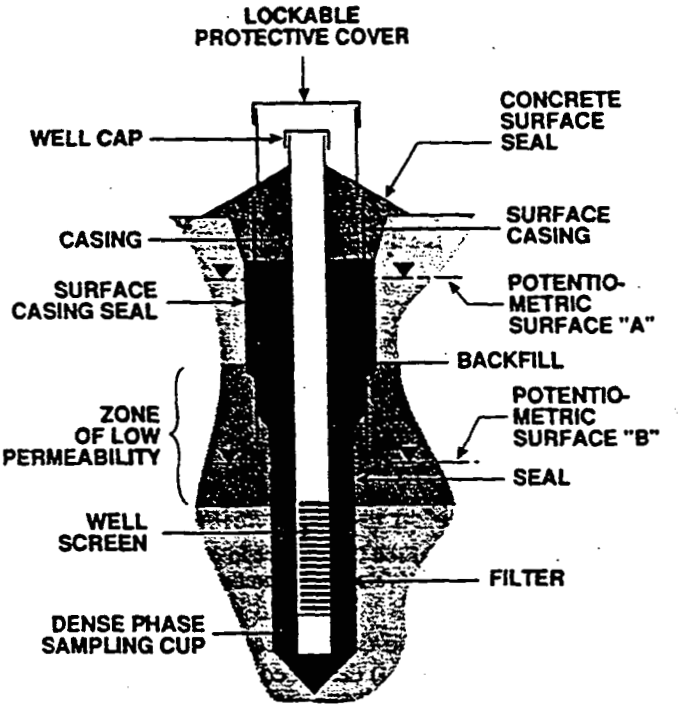

FIG. 31 A Monitoring Well Installed to Sample From the Lower of Two Ground-Water Zones

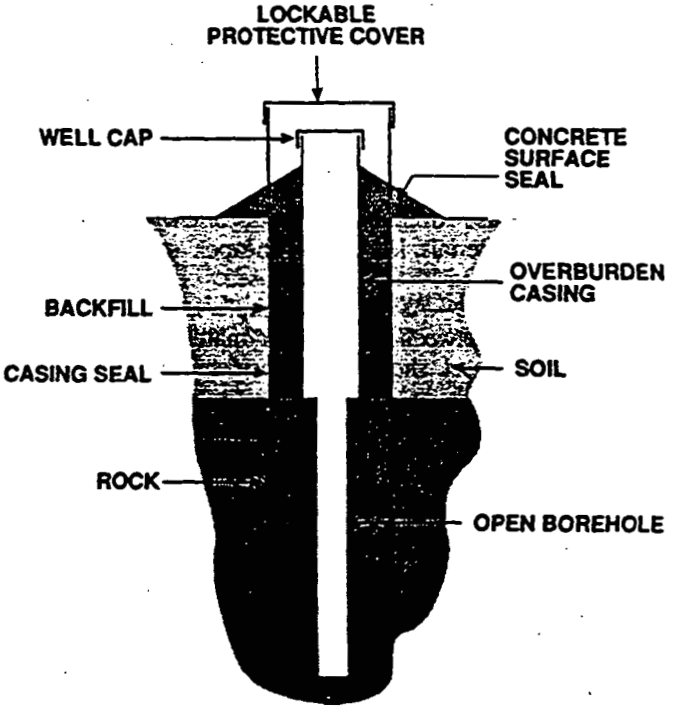

FIG. 32 An Open-Hole Ground-Water Monitoring Well in Rock

9.4.4 *Drainage Samplers:*

9.4.4.1 Drainage systems consist of conduits installed within the perched zone at sufficient slopes for water to flow to a central ditch or drain. The conduits can be tile drains, half perforated pipes, synthetic sheeting, or even layers of gravel and sand. Schilfgaarde ed. (123), contains numerous

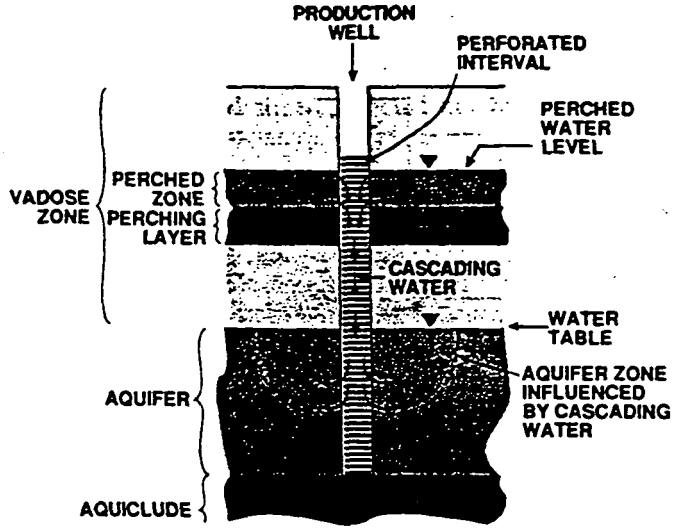

FIG. 33 Conceptualized Cross Section of a Well Showing Cascading Water from Perched Zone

papers on the design and construction of drainage systems. Donnan and Schwab (124) described sampling from agricultural drainage systems. Gilliam et al (125), Gambrell et al (126), Eccles and Gruenberg (127) and Gilliam et al (128) described sampling from tile drains. Gilliam et al (125) and Jacobs and Gilliam (129) described sampling from drainage ditches. Wilson and Small (130) described a lateral drain sampler installed beneath a new sanitary landfill. A perforated pipe collected liquid that was funneled to a sump via a drain line. In most of these systems, a thin layer of high permeability sand or gravel is installed around the drain to promote flow into the collector, and to sieve out fine materials.

9.4.4.2 Because drainage systems often require large quantities of materials, less exotic, cheaper materials such as baked clay tiles and PVC are often used.

9.4.5 *Comments*—As with all samplers, potential chemical interaction between the sampler material and the constituents of interest should be considered. Because these samplers are usually installed for other purposes, incompatibility of materials with monitoring objectives is often a problem. Everett et al (9), Dunlap (131), and U.S. EPA (109) discussed this topic.

9.5 *Installation Methods:*

9.5.1 *Point Samplers*—Reeve (107), Patton and Smith (108), and Morrison (1) discussed procedures for installing and maintaining point samplers.

9.5.2 *Wells*—Most of the references listed in 9.4.2.1 describe methods for installing monitoring wells.

9.5.3 *Cascading Water Samplers*—Wilson and Schmidt (103) discussed methods for installing cascading water samplers.

9.5.4 *Drainage Samplers*—Schilfgaarde ed. (123) contains articles that discussed installation of agricultural drainage systems. Associated hazards and costs often prohibit the installation of these systems at existing landfills. As a result, inclusion of these systems, as leachate collectors, in new landfills is more common. Everett et al (9) discussed methods for installing drainage sampling systems at hazardous waste sites.

9.6 *Operation:*

9.6.1 *Point Samplers*—Point samplers usually have diameters that are too small to allow the use of submersible pumps. As a result, suction methods are usually required. Sampling techniques are described in Pickens et al (106), Reeve (107), Patton and Smith (108) and Morrison (1).

9.6.2 *Wells*—Samples may be retrieved from wells in the same manner as from piezometers. However, because wells are designed for sampling or pumpage, diameters are usually large enough to accommodate most pumps. Samples can be brought to the surface by a variety of systems including bailers, suction pumps (for example, peristaltic pumps), air lift pumps, piston pumps, submersible pumps and swabbing. Each of these methods have advantages and disadvantages relating to considerations such as depth to water, required sample volume, sampling speed, alteration of the sample chemistry, equipment requirements, manpower requirements, and cost. These considerations were discussed by Everett et al (9), Fenn et al (132), Gibb et al (133), U.S. EPA (109), Dunlap et al (131), Driscoll (110), and Anderson (75). Sampling methods were described in most of the references of 9.4.2.1. As described in 9.3.2, samples from wells are averaged over the screened interval. However, samples from discrete depths along the screened interval can also be obtained using packer-pump setups such as those described by Fenn et al (132).

9.6.3 *Cascading Water Samplers:*

9.6.3.1 Wilson and Schmidt (103) described techniques for sampling from cascading wells. A bailer or bucket is decontaminated and then lowered to a position in the below the cascading water but above the water table. When the sampler is full, it is pulled back to the surface. Alternately, as shown in Fig. 33, the chemistry of the water table immediately around a well that has been shut down will be dominated by the cascading water. Therefore, a sample can also be collected from the water table during the initial stages of pumping.

9.6.3.2 Cascading wells are usually production wells in which drawdown has lowered the water table sufficiently to cause cascading. Because of this, there is usually a pump installed in the well that will prevent access for sampling. However, the pumps are periodically removed for maintenance. Therefore, it should be possible to coordinate sampling with pump maintenance personnel.

9.6.4 *Drainage Samplers*—Samples may be collected where tile lines or drainage pipes discharge to ditches or sumps (125, 126, 127, 128, 129, 130). Willardson et al (134) described a "flow-path ground water sampler" that allows collection of water following different flowpaths along a tile drainage system.

9.7 *Limitations:*

9.7.1 Perched water systems can be difficult to find and delineate. Surface and borehole geophysical methods (for example, neutron logging) and video logging of existing wells are often used. Also, perched systems tend to be ephemeral. Therefore, suctions samplers are sometimes required as backups.

9.7.2 *Point Samplers*—The major problem with point sampling systems is that their diameters are often too small to allow adequate development after installation or to allow sampling by any method other than suction. Because the

maximum suction lift of water is about 7.5 m, this is the maximum sampling depth for many of the small diameters systems. Systems such as those depicted in Fig. 29 require tight contact with the surrounding material to prevent side leakage of liquid. Depending on the material, this tight contact may not be achievable (9).

9.7.3 *Wells*—Wells provide samples that are averaged over the screened interval. As a result, when contaminants are detected, packer-pump arrangements must be used if zonation of the contaminants is to be delineated. When separate phases of water-immiscible fluid (for example, oil) are found floating in the well, it is difficult to obtain samples of the underlying water without contamination from the overlying fluid. As with all samplers, care should be taken to ensure that materials used to construct a well are compatible with the chemical analyses to be performed.

9.7.4 *Cascading Water Samplers*—Cascading water may enter a well from several distinct perched systems (103). As a result, the sample may be a mixture of water from several depths. Cascading water is most often sampled from pre-existing wells used for other purposes. As a result, materials used in the well construction may alter those chemical constituents of interest. Wells used for irrigation and water supply often have lubricant oils from the pump floating in them. With fluctuating water levels, these oils become smeared along the casing, and may even move out into the surrounding soils. Therefore, traces of these oils may appear in samples.

9.7.5 *Drainage Samplers*—Because of the limitations of excavation equipment, drainage samplers are limited to shallow depths. In addition, the systems are difficult to install in rocky or steep terrains. In areas that experience freeze-thaw cycles, they may be damaged by soil heaving (9). Drainage systems are often susceptible to clogging over time as fine particles and chemically precipitated material accumulate on the drain openings. Collected samples may or may not be representative of average conditions, depending on the distribution of soil types and contaminants in the drained area. If the area of contamination is small compared to the drained area, dilution may prevent the detection of contaminants. In addition, pollutants that are heavier than water may move below the drain if it is not located at the bottom of the perched zone. As with all samplers, there is the possibility of chemical interaction between the sampling system and the chemical constituents of interest. In the case of drainage sampling systems, this effect is amplified as contaminants may have to travel considerable distances through drains before being sampled. In addition, normally non-aerated solutions may be aerated and chemically altered as they travel through drains.

10. Experimental Absorption Samplers

10.1 *Operating Principles*—Absorbent samplers depend on the ability of the material to absorb pore-liquid (1). Samples are collected by placing the sampler in contact with soil. Liquid is allowed to absorb into the sampler material over time. The sampler is then removed, and the sample liquid is extracted for analyses.

10.2 *Description:*

10.2.1 Two designs have been described. The first design includes a cellulose-nylon sponge (0.5 by 4.8 by 30 cm) seated in a galvanized iron trough. The trough is pressed against a soil surface with a series of lever hinges (135).

10.2.2 The second absorbent sampler design consists of tapered ceramic rods that are driven into soil (136). The rods are made from unglazed ceramic similar to that used as the porous segments of suction samplers.

10.3 *Installation:*

10.3.1 *Pre-Installation:*

10.3.1.1 Sponge samplers are prepared by soaking them for 24 h in a 1 to 5 % NaOH solution containing a washing powder, Tadros and McGarity (135). Sponges are then pressed dry using rollers, stored in a moisture tight container, and taken to the field.

10.3.1.2 Ceramic rod samplers are weighed, boiled in distilled water, oven dried, and stored in a desiccator. The rods are weighed again and then taken to the field.

10.3.2 *Installation:*

10.3.2.1 A sponge is placed in the sampling trough. The trough is then placed in a horizontal cavity cut into the side of a trench. The trough is then pressed against the cavity ceiling with the lever hinges.

10.3.2.2 A ceramic rod sampler is installed by simply driving it into the soil.

10.3.3 *Maintenance:*

10.3.3.1 The only field maintenance required for sponge samplers is the preservation of the sampling trench if future sampling is desired at that location.

10.3.3.2 There is no field maintenance for ceramic rod samplers as they are completely removed to retrieve the samples.

10.3.4 *Comments*—Theoretically, there is no maximum installation depth for sponge samplers. However, because access trenches are required for operation, installations are restricted to shallow depths dictated by excavation equipment and safety considerations. Given the NaOH treatment (without rinsing) of the sponge, measurements of pH, conductivity, TDS, metals and major cations and anions might be affected by the residual NaOH. Depending on the composition of the "washing powder", phosphate, BOD, and MBAS might also be affected.

10.3.4.1 Ceramic rod samplers will have maximum installation depths if pushed or driven from the surface. This maximum depth will generally decrease with increasing soil grain size. However, deeper installations can be achieved by drilling to the top of the interval to be sampled, lowering a rod down the hole and pushing or driving the rod into the sampling interval (136).

10.4 *Operation:*

10.4.1 *Methods:*

10.4.1.1 Sponge samplers are pressed against the soil until a sufficient volume of liquid for planned analyses has been absorbed. The sampler is then removed and the sponge is placed in a moisture proof container. The sample is extracted from the sponge with rollers.

10.4.1.2 Ceramic rod samplers are pushed or driven into the soil and left in place for a period of time. The rods are then withdrawn, and weighed. The rods are leached by boiling in a known volume of distilled water. This solution is then analyzed. The concentrations of constituents in the original pore-liquid are estimated by using the ratio of the volume of absorbed water to the volume of the boiling water.

10.4.2 *Comments*—The amount of liquid that can be sampled is dependent on time, soil type, moisture content, absorbency of the sampler material, volume of the absorbent material, and surface area of the absorbent material in contact with the soil. Generally, sponge samplers function only at higher moisture contents approaching saturation (1). Shimshi (136) used ceramic rod samplers to sample from a sandy loam with moisture contents varying from 7 to 20 %.

10.5 *Limitations:*

10.5.1 Physically, absorbent methods are limited to soils approaching saturation. Sampling requires removal of the absorbent material. Because of this, repeat sampling at the same location is difficult. Although the sampler may be placed back at its original location, identical hydraulic contact with the soil cannot be guaranteed.

10.5.2 Chemically, as with other samplers, there are problems with absorption, desorption, precipitation, cation exchange, and screening of various pore-liquid components as a function of the sampler materials. Tadros and McGarr (135) discussed these concerns in relation to sponge samplers. Shimshi (136) provided a good discussion of the limitations of sampling for nitrate with ceramic rod samplers. Specifically, he found that at lower moisture contents, sampled solutions became less representative due to vapor transfer and chromatographic separation. However, he suggested that these effects could be reduced by increasing the length of the rod insertion period. Clearly, boiling will affect analyses for organics, BOD, COD, NH_3, and some other species of nitrogen, among others.

11. Keywords

11.1 pore fluids, pressure vacuum lysimeters; soil moisture; soil water; suction lysimeters; unsaturated; vadose zone sampling

APPENDIX

(Nonmandatory Information)

X1. DESCRIPTIONS OF TERMS SPECIFIC TO THIS STANDARD

X1.1 *air entry value*—the applied suction at which water menisci of the porous segment of a suction sampler break down, and air enters.

X1.2 *bubbling pressure*—the applied air pressure at which water menisci of the porous segment of a suction sampler break down, and air exits.

X1.3 *cascading water*—perched ground water that enters a well casing via cracks or uncovered perforations, trickling, or pouring down the inside of the casing.

X1.4 *cation exchange capacity (CEC)*—the total capacity of a porous system to adsorb cations from a solution.

X1.5 *hydraulic gradient*—the change in total hydraulic head of water per unit distance of flow.

X1.6 *hydrophobicity*—the property that defines a material as being water repellent. Water exhibits an obtuse contact angle with hydrophobic materials.

X1.7 *hydrophelicity*—the property that defines a material as attracting water. Water exhibits an acute contact angle with hydrophilic materials.

X1.8 *lysimeter*—a device to measure the quantity or rate of water movement through a block of soil, usually undisturbed or in-situ; or to collect such percolated water for analyses.

X1.9 *macropore*—interaggregate cavities that serve as the principal avenues for the infiltration and drainage of water and for aeration.

X1.10 *matric potential*—the energy required to extract water from a soil against the capillary and adsorptive forces of the soil matrix.

X1.11 *matric suction*—for isothermal soil systems, matric suction is the pressure difference across a membrane separating soil solution, in-place, from the same bulk (see soil-water pressure).

X1.12 *micropore*—intraaggregate capillaries responsible for the retention of water and solutes.

X1.13 *percolation*—the movement of water through the vadose zone, in contrast to infiltration at the land surface and recharge across a water table.

X1.14 *pore-liquid*—Liquid that occupies an open space between solid soil particles. Within this guide, pore-liquid is limited to aqueous pore-liquid; that includes water and its solutes.

X1.15 *pore-liquid tension*—see *matric-suction* or *soil-water pressure.*

X1.16 *pressure head*—the head of water at a point in a porous system; negative for unsaturated systems, positive for saturated systems. Quantitatively, it is the water pressure divided by the specific weight of water.

X1.17 *Richard's outflow principle*—the principle that states that pore-liquid will not generally flow into an air-filled cavity (at atmospheric pressure) in unsaturated soil.

X1.18 *soil-water pressure*—the pressure on the water in a soil-water system, as measured by a piezometer for a saturated soil, or by a tensiometer for an unsaturated soil.

X1.19 *tensiometer*—a device for measuring soil-water matric potential (or tension or suction) of water in soil in-situ; a porous, permeable ceramic cup connected through a water filled tube to a pressure measuring device.

X1.20 *total soil-water potential*—the sum of the energy-related components of a soil-water system; for example, the sum of the gravitational, matric and osmotic potentials.

X1.21 *tremie method*—the method whereby materials are emplaced in the bottom of a borehole with a small diameter pipe.

X1.22 *vacuum*—a degree of rarefaction below atmospheric pressure: negative pressure.

X1.23 *Vadose zone*—the hydrogeological region extending from the soil surface to the top of the principle water table; commonly referred to as the "unsaturated zone" or "zone of aeration". These alternate names are inadequate as

y do not take into account locally saturated regions above e principle water table (for example, perched water zones).

X1.24 *water content*—the amount of water stored within a porous matrix, expressed as either a volume (volume per unit volume) or a mass (mass per unit mass) of a given solid.

REFERENCES

(1) Morrison, Robert D., *Ground Water Monitoring Technology*, Timco Mfg., Inc., Prairie Du Sac, Wisconsin, 1983.

(2) Wilson, L. G., *Monitoring in the Vadose Zone: A Review of Technical Elements and Methods*, U.S. Environmental Protection Agency, EPA-600/7-80-134, 1980.

(3) Wilson, L. G., "The Fate of Pollutants in the Vadose Zone, Monitoring Methods and Case Studies", *Thirteenth Biennial Conference on Ground Water*, September 1981.

(4) Everett, L. G., "Monitoring in the Vadose Zone", *Ground Water Monitoring Review*, Summer 1981, pp. 44–51.

(5) Wilson, L. G., "Monitoring in the Vadose Zone: Part II", *Ground Water Monitoring Review*, Winter 1982, pp. 31–42.

(6) Everett, L. G., Wilson, L. G., and McMillion, L. G., "Vadose Zone Monitoring Concepts for Hazardous Waste Sites", *Ground Water*, Vol 20, May/June 1982, pp. 312–324.

(7) Wilson, L. G., "Monitoring in the Vadose Zone: Part III", *Ground Water Monitoring Review*, Winter 1983, pp. 155–165.

(8) Everett, Lorne G., Hoylman, Edward W., Wilson, L. Graham, and McMillion, Leslie G., "Constraints and Categories of Vadose Zone Monitoring Devices", *Ground Water Monitoring Review*, Winter 1984, pp. 26–32.

(9) Everett, L. G., Wilson, L. G., and Hoylman, E. W., *Vadose Zone Monitoring Concepts for Hazardous Waste Sites*, Noyes Data Corporation, New Jersey, 1984.

(10) Robbins, Gary A., and Gemmell, Michael M., "Factors Requiring Resolution in Installing Vadose Zone Monitoring Systems", *Ground Water Monitoring Review*, Summer 1985, pp. 75–80.

(11) Merry, W. M., and Palmer, C. M., "Installation and Performance of a Vadose Monitoring System", *Proceedings of the NWWA Conference on Characterization and Monitoring of the Vadose Zone*, NWWA, 1986, pp. 107–125.

(12) Environmental Monitoring Systems Laboratory, *Permit Guidance Manual on Unsaturated Zone Monitoring for Hazardous Waste Land Treatment Units*, U.S. Environmental Protection Agency, Office of Solid Waste and Emergency Response, EPA/530-SW-86-040, October 1986.

(13) Ball, John, and Coley, David M., "A Comparison of Vadose Monitoring Procedures", *Proceedings of the Sixth National Symposium and Exposition on Aquifer Restoration and Ground Water Monitoring*, NWWA/EPA, 1986, pp. 52–61.

(14) Wilson, L. G., "Methods for Sampling Fluids in the Vadose Zone", *Ground Water and Vadose Zone Monitoring, ASTM STP 1053*, ASTM, 1990, pp. 7–24.

(15) Bond, William R., and Rouse, Jim V., "Lysimeters Allow Quicker Monitoring of Heap Leaching and Tailing Sites", *Mining Engineering*, April 1985, pp. 314–319.

(16) Doanhue, Miller, and Shickluna, *Soils—An Introduction to Soils and Plant Growth*, 1977.

(17) Johnson, Thomas, M., and Cartwright, Keros, *Monitoring of Leachate Migration in the Unsaturated Zone in the Vicinity of Sanitary Landfills*, State Geological Survey Circular 514, Urbana, Illinois, 1980.

(18) Sales Division, *Catalog of Products*, Soilmoisture Equipment Corp., Santa Barbara, California, 1988.

(19) Hansen, Edward A., and Harris, Alfred Ray, "Validity of Soil-Water Samples Collected with Porous Ceramic Cups", *Soil Science Society of America Proceedings*, Vol 39, 1975, pp. 528–536.

(20) Quin, B. F., and Forsythe, L. J., "All-Plastic Suction Lysimeters for the Rapid Sampling of Percolating Soil Water", *New Zealand Journal of Science*, Vol 19, 1976, pp. 145–148.

(21) Long, F. Leslie, "A Glass Filter Soil Solution Sampler", *Soil Science Society of America Journal*, Vol 42, 1978, pp. 834–835.

(22) Starr, Michael R., "Variation in the Quality of Tension Lysimeter Soil Water Samples from a Finnish Forest Soil", *Soil Science*, Vol 140, December 1985, pp. 453–461.

(23) Sales Division, *Catalog of Products*, Mott Metallurgical Corp., Farmington, Conn., 1988.

(24) Smith, C. N., and Carsel, R. F., "A Stainless-Steel Soil Solution Sampler for Monitoring Pesticides in the Vadose Zone", *Soil Science Society of America Journal*, Vol 50, 1986, pp. 263–265.

(25) Caster, A., and Timmons, R., "Pourous Teflon®: Its Application in Groundwater Sampling", Timco Mfg. Inc., Prairie Du Sac, Wisc., 1988.

(26) Parizek, Richard R., and Lane, "Soil-Water Sampling Using Pan and Deep Pressure-Vacuum Lysimeters", *Journal of Hydrology*, Vol 11, 1970, pp. 1–21.

(27) Trainor, David P., *The Relationship Between Two Laboratory Leaching Procedures and Leachate Quality at Foundry Waste Landfills*, M. S. Thesis/Independent Report, Dept. of Civil and Environmental Engineering, The University of Wisconsin, Madison, Wisconsin, February, 1983.

(28) Young, Mark, "Use of Suction Lysimeters for Monitoring in the Landfill Linear Zone", *Proceedings of Monitoring Hazardous Waste Sites*, Geotechnical Engineering Division, American Society of Civil Engineers, Detroit, Mich., October, 1985.

(29) Morrison, R. D., and Tsai, T. C., *Modified Vacuum-Pressure Lysimeter for Vadose Zone Sampling*, Calscience Research Inc., Huntington Beach, California, 1981.

(30) Morrison, Robert, and Szecsody, James, "Sleeve and Casing Lysimeters for Soil Pore Water Sampling", *Soil Science*, Vol 139, May 1985, pp. 446–451.

(31) Nightingale, H. I., Harrison, Doug, and Salo, John E., "An Evaluation Technique for Ground Water Quality Beneath Urban Runoff Retention and Percolation Basins", *Ground Water Monitoring Review*, Vol 5, Winter 1985, pp. 43–50.

(32) Torstensson, B. A., and Petsonk, A. M., "A Hermetically Isolated Sampling Method for Ground Water Investigations", *Ground Water Contamination: Field Methods, ASTM STP 963*, ASTM, 1988, pp. 274–289, and Knighton, M. Dean, and Streblow, Dwight E., "A More Versatile Soil Water Sampler", *Soil Science Society of America Journal*, Vol 45, 1981, pp. 158–159.

(33) Jackson, D. R., Brinkley, F. S., and Bondietti, E. A., "Extraction of Soil Water Using Cellulose-Acetate Hollow Fibers", *Soil Science Society of America Journal*, Vol 40, 1976, pp. 327–329.

(34) Levin, M. J., and Jackson, D. R., "A Comparison of In Situ Extractors for Sampling Soil Water", *Soil Science Society of America Journal*, Vol 41, 1977, pp. 535–536.

(35) Stevenson, Craig D., "Simple Apparatus for Monitoring Land Disposal Systems by Sampling Percolating Soil Waters", *Environmental Science and Technology*, Vol 12, March 1978, pp. 329–331.

(36) Wagemann, R., and Graham, B., "Membrane and Glass Fibre Filter Contamination in Chemical Analysis of Fresh Water", *Water Research*, Vol 8, 1974, pp. 407–412.

(37) Sales Division, *Catalog of Products*, Cole-Parmer Instrument Company, 1988.

(38) Sales Division, *Catalog of Products*, Corning Glass Works, New York, 1988.

(39) Duke, H., Kruse, E., and Hutchinson, G., "An Automatic Vacuum Lysimeter for Monitoring Percolation Rates", *USDA Agricultural Research Service*, ARS, 1970, pp. 41–165.

(40) Tanner, C. B., Bourget, S. J., and Holmes, W. E., "Moisture Tension Plates Constructed from Alundum Filter Discs", *Soil Science Society of America Proceedings*, Vol 18, 1954, pp. 222–223.

(41) Cole, D. W., "Alundum Tension Lysimeter", *Soil Science*, Vol 85, June 1958, pp. 293–296.

(42) Cole, D., Gessell, S., and Held, E., "Tension Lysimeter Studies of Ion and Moisture Movement in Glacial Till and Coral Atoll Sites", *Soil Science Society of America Proceedings*, Vol 25, 1968, pp. 321–325.

(43) Nielson, D., and Phillips, R., "Small Fritted Glass Bead Plates For Determination of Moisture Retention", *Soil Science Society of America Proceedings*, Vol 22, 1958, pp. 574–575.

(44) Chow, T. L., "Fritted Glass Bead Materials as Tensiometers and Tension Plates", *Soil Science Society of America Journal*, Vol 41, 1977, pp. 19–22.

(45) Everett, Lorne, and McMillion, Leslie, G., "Operational Ranges for Suction Lysimeters", *Ground Water Monitoring Review*, Summer 1985, pp. 51–60.

(46) Haldorsen, Sylvi, Petsonk, Andrew M., and Tortensson, Bengt-Arne, "An Instrument for In-Situ Monitoring of Water Quality and Movement in the Vadose Zone", *Proceedings of the NWWA Conference on Characterization and Monitoring of the Vadose Zone*, NWWA, 1986, pp. 158–172.

(47) Neary, A. J., and Tomassini, F., "Preparation of Alundum/Ceramic Plate Tension Lysimeters for Soil Water Collection", *Canadian Journal of Soil Science*, Vol 65, February 1985, pp. 169–177.

(48) Wolff, R. G., "Weathering Woodstock Granite, near Baltimore, Maryland", *American Journal of Science*, Vol 265, 1967, pp. 106–117.

(49) Wood, Warren W., "A Technique Using Porous Cups for Water Sampling at Any Depth in the Unsaturated Zone", *Water Resources Research*, Vol 9, April 1973, pp. 486–488.

(50) Debyle, Norbert V., Hennes, Robert W., and Hart, George E., "Evaluation of Ceramic Cups for Determining Soil Solution Chemistry", *Soil Science*, Vol 146, July 1988, pp. 30–36.

(51) England, C. B., "Comments on A Technique Using Porous Cups for Water Sampling at Any Depth in the Unsaturated Zone by Warren W. Wood", *Water Resources Research*, Vol 10, October 1974, pp. 1049.

(52) Bottcher, A. B., Miller, L. W., and Campbell, K. L., "Phosphorous Adsorption in Various Soil-Water Extraction Cup Materials: Effect of Acid Wash", *Soil Science*, Vol 137, 1984, pp 239–244.

(53) Peters, Charles A., and Healy, Richard W., "The Representativeness of Pore Water Samples Collected from the Unsaturated Zone Using Pressure-Vacuum Lysimeters", *Ground Water Monitoring Review*, Spring 1988, pp. 96–101.

(54) Linden, D. R., "Design, Installation and Use of Porous Ceramic Samplers for Monitoring Soil-Water Quality", *U.S. Dep. Agric. Technical Bull.*, 1562, 1977.

(55) Rhoades, J. D., and Oster, J. D., "Solute content," Methods of Soil Analysis, Part I, Agronomy Series Monograph No 9, Second Edition, American Society of Agronomy, Inc. Madison, Wisconsin, 1986, pp. 985–1006.

(56) Klute, A., ed., *Methods of Soil Analysis, Part I*, Agronomy Series Monograph No. 9, Second Edition, American Society of Agronomy, Inc., Madison, Wisconsin, 1986.

(57) Brose, Richard J., Shatz, Richard W., and Regan, Thomas M., "An Alternate Method of Lysimeter and Flour Pack Placement in Deep Boreholes", *Proceedings of the Sixth National Symposium and Exposition on Aquifer Restoration and Ground Water Monitoring*, NWWA, 1986, pp. 88–95.

(58) Litaor, M. Iggy, "Review of Soil Solution Samplers", *Water Resources Research*, Vol 24, May 1988, pp. 727–733.

(59) Silkworth, D. R., and Grigal, D. F., "Field Comparison of Soil Solution Samplers", *Soil Science Society of America Journal*, Vol 45, 1981, pp. 440–442.

(60) Smith, J. L., and McWhorter, D. M., "Continuous Subsurface Injection of Liquid Organic Wastes", *Land as a Waste Management Alternative*, Ann Arbor Science, 1977, pp. 646–656.

(61) Grier, H. E., Burton, W., and Tiwari, "Overland Cycling of Animal Waste", *Land as a Waste Management Alternative*, Ann Arbor Science, 1977, pp. 693–702.

(62) Smith, J. H., Robbins, C. W., Bondurant, J. A., and Hayden, C W., "Treatment of Potato Processing Wastewater on Agricultu Land: Water and Organic Loading, and the Fate of Applied Pl Nutrients", *Land as a Waste Management Alternative*, An Arbor Science, 1977, pp. 769–781.

(63) Morrison, Robert D., and Szecsody, Jim E., "A tensiometer and Pore Water Sampler for Vadose Zone Monitoring", *Soil Science*, Vol 144, November 1987, pp. 367–372.

(64) Baier, Dwight C., Aljibury, Falih K., Meyer, Jewell K., Wolfenden, Allen K., *Vadose Zone Monitoring is Effective for Evaluating the Integrity of Hazardous Waste Pond Liners*, Baier Agronomy, Inc., Woodland, California, November 1983.

(65) Taylor, S. A., and Ashcroft, G. L., *Physical Edaphology, The Physics of Irrigated and Non Irrigated Soils*, W. H. Freeman and Company, San Francisco, 1972.

(66) Hornby, W. J., Zabick, J. D., and Crawley, W., "Factors Which Affect Soil-Pore Liquid: A Comparison of Currently Available Samplers with Two New Designs", *Ground Water Monitoring Review*, Vol 6, Spring 1986, pp. 61–66.

(67) Wengel, R. W., and Griffin, G. F., "Remote Soil-Water Sampling Technique", *Soil Science Society of America Journal*, Vol 35, 1971, pp. 661–664.

(68) Brown, K. W., Thomas, J. C., and Aurelius, M. W., "Collecting and Testing Barrel Sized Undisturbed Soil Monoliths", *Soil Science Society of America Journal*, Vol 49, 1985, pp. 1067–1069.

(69) Wagner, George H., "Use of Porous Ceramic Cups to Sample Soil Water Within the Profile", Soil Science, Vol 94, 1962, pp. 379–386.

(70) Nagpal, N. K., "Comparison Among and Evaluation of Ceramic Porous Cup Soil Water Samplers for Nutrient Transport Studies", *Canadian Journal of Soil Science*, Vol 62, 1982, pp. 685–694.

(71) Bouma, J., Jongerius A., and Schoondebeek, D., "Calculation of Hydraulic Conductivity of Some Saturated Clay Soils Using Micromorpho-Meteric Data", *Soil Science Society of Ameri Journal*, Vol 43, 1979, pp. 261–265.

(72) Warrick, A. W., and Amoozegar-Fard, A., "Soil Water Regim Near Porous Cup Water Samplers", *Water Resources Research*, Vol 13, February 1977, pp. 203–207.

(73) Van der Ploeg, R. R., and Beese, F., "Model Calculations for the Extraction of Soil Water by Ceramic Cups and Plates", *Soil Science Society of America Journal*, Vol 41, 1977, pp. 466–470.

(74) Narasimhan, T. N., and Dreiss, Shirley, J., "A Numerical Technique for Modeling Transient Flow of Water to a Soil Water Sampler", *Soil Science*, Vol 141, March 1986, pp. 230–236.

(75) Anderson, Linda Davis, "Problems Interpreting Samples Taken with Large-Volume, Falling Suction Soil-Water Samplers", *Ground Water*, 1986.

(76) Law Engineering Testing Company, *Lysimeter Evaluation Study*, American Petroleum Institute, May 1982.

(77) Hillel, D., *Applications of Soil Physics*, Academic Press, NY, 1980.

(78) Sales Division, *Catalog of Products*, BAT Envitech Inc., Long Beach California, 1988.

(79) Brown, K. W., *Efficiency of Soil Core and Soil Pore-Liquid Sampling Systems*, U.S. EPA/600/52-86/083, Virginia, February, 1987.

(80) Amter, S., *Injection/Recovery Lysimeter Technique for Soil-Water Extraction*, M. S. Thesis, Dept. of Hydrology and Water Resources, The University of Arizona, Tucson, Arizona, 1987.

(81) Barbee, G. C., and Brown, K. W., "Comparison Between Suction and Free-Drainage Soil Solution Samplers", *Soil Science*, Vol 141, February 1986, pp. 149–154.

(82) Amoozegar-Fard, A. D., Nielsen, D. R., and Warrick, A. W., "Soil Solute Concentration Distributions for Spatially Varying Pore Water Velocities and Apparent Diffusion Coefficients" *Soil Science Society of America Journal*, Vol 46, 1982, pp. 3–9.

(83) Haines, B. L., Waide, J. B., and Todd, R. L., "Soil Solu Nutrient Concentrations Sampled with Tension and Ze Tension Lysimeters: Report of Discrepancies", *Soil Science Society of America Journal*, Vol 46, 1982, pp. 658–660.

(84) Biggar, J. W., and Nielsen, D. R., "Spatial Variability of the

Leaching Characteristics of a Field Soil", *Water Resources Research*, Vol 12, 1976, pp. 78–84.

(85) Thomas, G. W., and Phillips, R. E., "Consequences of Water Movement in Macropores", *Journal of Environmental Quality*, Vol 8, 1979, pp. 149–152.

(86) Severson, R. C., and Grigal, D. F., "Soil Solution Concentrations: Effect of Extraction Time Using Porous Ceramic Cups Under Constant Tension", *Water Resources Bulletin*, Vol 12, December 1976, pp. 1161–1169.

(87) Shuford, J. W., Fritton, D. D., and Baker, D. E., "Nitrate-Nitrogen and Chloride Movement Through Undisturbed Field Soil", *Journal of Environmental Quality*, Vol 6, 1977, pp. 736–739.

(88) Tyler, Donald D., and Thomas, Grant W., "Lysimeter Measurements of Nitrate and Chloride Losses from Soil Under Conventional and No-Tillage Corn", *Journal of Environmental Quality*, Vol 6, 1977, pp. 63–66.

(89) Suarez, D. L., "Prediction of pH Errors in Soil Water Extractors Due to Degassing", *Soil Science Society of America Journal*, Vol 51, 1987, pp. 64–68.

(90) Ransom, M. D., and Smeck, N. E., "Water Table Characteristics and Water Chemistry of Seasonally Wet Soils of Southwestern Ohio", *Soil Science Society of America Journal*, Vol 50, 1986, pp. 1281–1290.

(91) Wood, A. L., Wilson, J. T., Cosby, R. L., Hornsby, A. G., and Baskin, L. B., "Apparatus and Procedure for Sampling Soil Profiles for Volatile Organic Compounds", *Soil Science Society of America Journal*, Vol 45, 1981, pp. 442–444.

(92) Pettyjohn, Wayne A., Dunlap, W. J., Cosby, Roger, and Keeley, Jack W., "Sampling Ground Water for Organic Contaminants", *Ground Water*, Vol 19, March-April 1981, pp. 180–189.

(93) Creasey, Carol L., and Dreiss, Shirley J., "Soil Water Sampler: Do They Significantly Bias Concentrations in Water Samples?", *Proceedings of the NWWA Conference on Characterization and Monitoring of the Vadose Zone*, NWWA, 1986, pp. 173–181.

(94) Bell, R. G., "Porous Ceramic Soil Moisture Samplers, An Application in Lysimeter Studies on Effluent Spray Irrigation", *New Zealand Journal of Experimental Agriculture*, Vol 2, June 1974, pp. 173–175.

(95) Dazzo, F., and Rothwell, D., "Evaluation of Porcelain Cup Soil Water Samplers For Bacteriological Sampling", *Applied Microbiology*, Vol 27, 1974, pp. 1172–1174.

(96) Jordan, Carl F., "A Simple, Tension-Free Lysimeter", *Soil Science*, Vol 105, 1968, pp. 81–86.

(97) Montgomery, B. R., Prunty, Lyle, and Bauder, J. W., "Vacuum Trough Extractors for Measuring Drainage and Nitrate Flux Through Sandy Soils", *Soil Science Society of America Journal*, Vol 51, 1987, pp. 271–276.

(98) Schmidt, C., and Clements, E., *Reuse of Municipal Wastewater For Groundwater Recharge*, U.S. Environmental Protection Agency, 68-03-2140, 1978, Ohio, pp. 110–125.

(99) Schneider, B. J., Oliva, J., Ku, H. F. H., and Oaksford, E. T., "Monitoring the Movement and Chemical Quality of Artificial-Recharge Water in the Unsaturated Zone on Long Island, New York", *Proceedings of the Characterization and Monitoring of the Vadose (Unsaturated) Zone*, National Water Well Association, Las Vegas, Nevada, 1984, pp. 383–410.

(100) K. W. Brown and Associates, *Hazardous Waste Land Treatment*, U.S. EPA, Office of Research and Development, SW-874, Cincinnati, Ohio, September, 1980.

(101) Schneider, B. J., and Oaksford, E. T., *Design and Monitoring Capability of an Experimental Artificial-Recharge Facility at East Meadow, Long Island, New York*, U.S. Geological Survey Open-File Report 84-070, 1986.

(102) Joslin, J. D., Mays, P. A., Wolfe, M. H., Kelly, J. M., Garber, R. W., Brewer, P. F., "Chemistry of Tension Lysimeter Water and Lateral Flow in Spruce and Hardwood Stands", *Journal of Environmental Quality*, Vol 16, 1987, pp. 152–160.

(103) Wilson, L. G., and Schmidt, K. D., "Monitoring Perched Water in the Vadose Zone", *Establishment of Water Quality Monitoring Programs, Proceedings of a Symposium*, American Water Resources Association, 1978, pp. 134–149.

(104) Pickens, J. F., and Grisak, G. E., "Reply to the Preceding Discussion of Vanhof et al. at a Multilevel Device for Groundwater Sampling and Pieziometric Monitoring", *Ground Water*, Vol 17(4), 1979, pp. 393–397.

(105) Smith, S. A., Small, G. S., Phillips, T. S., and Clester, M., *Water Quality in the Salt River Project, A Preliminary Report*, Salt River Project Water Resource Operations, Ground Water Planning Division, Phoenix, Arizona, August, 1982.

(106) Pickens, J. F., Cherry, J. A., Coupland, R. M., Grisak, G. E., Merritt, W. F., and Risto, G. A., "A Multi-Level Device for Ground Water Sampling", *Ground Water Monitoring Review*, Vol 1(1), 1981.

(107) Reeve, R. C., and Doering, E. J., "Sampling the Soil Solution for Salinity Appraisal", *Soil Science*, Vol 99, 1965, pp. 339–344.

(108) Patton, F. D., and Smith, H. B., "Design Considerations and the Quality of Data from Multiple-Level Groundwater Monitoring Wells", *Ground-Water Contamination: Field Methods, ASTM STP 963*, ASTM, 1988, pp. 206–217.

(109) U.S. Environmental Protection Agency, *RCRA Ground-Water Monitoring Technical Enforcement Guidance Document*, Office of Waste Programs Enforcement, Office of Solid Waste and Emergency Response, OSWER-9950.1, 1986.

(110) Driscoll, F. G., *Groundwater and Wells*, Johnson Division, St. Paul, Minnesota, 1986.

(111) Gass, T. E., "Methodology for Monitoring Wells", *Water Well Journal*, Vol 38(6), 1984, pp. 30–31.

(112) Keely, J. F., and Boateng K., "Monitoring Well Installation, Purging and Sampling Techniques", *Ground Water*, 1987, Vol 25 (3, 4).

(113) Minning, R. C., "Monitoring Well Design and Installation", *Proceedings of the Second National Symposium on Aquifer Restoration and Ground Water Monitoring*, Columbus, Ohio, 1982, pp. 194–197.

(114) Richter, H. R., and Collentine, M. G., "Will My Monitoring Well Survive Down There?: Design and Installation Techniques for Hazardous Waste Studies", *Proceedings of the Third National Symposium on Aquifer Restoration and Ground Water Monitoring*, Columbus, Ohio, 1983, pp. 223–229.

(115) Riggs, C. O., "Monitoring Well Drilling Methods", *Proceedings of the Workshop on Resource Conservation Recovery Act Ground Water Monitoring Enforcement: Use of the Technical Enforcement Guidance Document and Compliance Order Guide*, Philadelphia, Pennsylvania, 1987.

(116) Riggs, C. O., and Hatheway, A. W., "Ground Water Monitoring Field Practice—An Overview", *Ground Water Contamination: Field Methods, ASTM STP 963*, ASTM, pp. 121–136, 1988.

(117) Scalf, M. R., McNabb, J. F., Dunlap, W. J., Cosby, R. L., and Fryberger, J., *Manual of Ground Water Sampling Procedures*, National Water Well Association, Ohio, 1981.

(118) Campbell, M., and Lehr, J., *Water Well Technology*, McGraw-Hill Book Co., New York, New York, 1973.

(119) Hackett, G., "Drilling and Constructing Monitoring Wells with Hollow Stem Augers", *Ground Water Monitoring Review*, Fall 1987, pp. 51–62.

(120) Hackett, G., "Drilling and Constructing Monitoring Wells with Hollow Stem Augers", *Ground Water Monitoring Review*, Winter 1988, pp. 60–68.

(121) Taylor, T. W., and Serafini, M. C., "Screened Auger Sampling: The Technique and Two Case Studies", *Ground Water Monitoring Review*, Summer 1988, pp. 145–152.

(122) Barcelona, M. J., Gibb, J. P., and Miller, R. A., *A Guide to the Selection of Materials For Monitoring Well Construction and Ground Water Sampling*, Illinois State Water Survey, Champaign, Illinois, 1983.

(123) Schilfgaarde, J. V., ed., *Drainage for Agriculture*, Number 17 in Agronomy Series, American Society of Agronomy, Madison, Wisconsin, 1974.

(124) Donnan, W. W. and G. O. Schwab, "Current Drainage Methods in the USA," in *Drainage for Agriculture*, Agronomy Monograph Number 17, American Society of Agronomy, Madison,

Wisconsin, 1974, pp 93–114.

(125) Gilliam, J. W., Daniels, R. B., and Lutz, J. F., "Nitrogen Content of Shallow Ground Water in the North Carolina Coastal Plain", *Journal of Environmental Quality*, Vol 2, 1974, pp. 147–151.

(126) Gambrell, R. P., Gilliam, J. W., and Weed, S. B., "Denitrification in Subsoils of the North Carolina Coastal Plain as Affected by Soil Drainage", *Journal of Environmental Quality*, Vol 4, 1975, pp. 311–316.

(127) Eccles, L. A., and Gruenberg, P. A., "Monitoring Agricultural Waste Water Discharges For Pesticide Residues", *Proceedings: Establishment of Water Quality Monitoring Programs*, American Water Resources Association, 1978, pp. 319–327.

(128) Gilliam, J. W., Skaggs, R. W., and Weed, S. B., "Drainage Control to Diminish Nitrate Loss from Agricultural Fields", *Journal of Environmental Quality*, Vol 8, 1979, pp. 137–142.

(129) Jacobs, T. C., and Gilliam, J. W., "Riparian Losses of Nitrate from Agricultural Drainage Waters", *Journal of Environmental Quality*, Vol 14, 1985, pp. 472–478.

(130) Wilson, L. G., and Small, G. G., "Pollution Potential of a Sanitary Landfill Near Tucson, Hydraulic Engineering and the Environment", *Proceedings 21st Annual Hydraulics Division Specialty Conference*, ASCE, 1973.

(131) Dunlap, William J., *Some Concepts Pertaining to Investigative Methodology for Subsurface Process Research*, U.S. Environmental Protection Agency, 1977, pp. 167–172.

(132) Fenn, D. E., Hanley, K. J., Isbister, J., Briads, O., Yare, B., and Roux, P., *Procedures Manual for Ground Water Monitoring at Solid Waste Disposal Facilities*, U.S. Environmental Protection Agency, EPA/530/SW-611, 1977.

(133) Gibb, J. P., Schuller, R. M., and Griffin, R. A., *Procedures for the Collection of Representative Water Quality Data from Monitoring Wells*, Cooperative Groundwater Report 7, Illinois State Water Survey, 1981.

(134) Willardson, L. S., Meek, B. D., and Huber, M. J., "A Flow Path Ground Water Sampler", *Soil Science Society of Ameri ceedings*, Vol 36, 1973, pp. 965–966.

(135) Tadros, V. T., and McGarity, J. W., "A Method for Col Soil Percolate and Soil Solution in the Field", *Plant and Soil*, Vol 44, June 1976, pp. 655–667.

(136) Shimshi, Daniel, "Use of Ceramic Points for the Sampling of Soil Solution", *Soil Science*, Vol 101, 1966, pp. 98–103.

(137) Grover, B. L., and Lamborn, R. E., "Preparation of Porous Seramic Cups to be Used for Extraction of Soil Water Having Low Solute Concentrations", *Soil Science Society of America Proceedings*, Vol 34, 1970, pp. 706–708.

(138) Zimmermann, C. F., Price, M. T., and Montgomery, J. R., "A Comparison of Ceramic and Teflon In-Situ Samplers for Nutrient Pore Water Determinations", *Estuarine and Coastal Marine Science*, Vol 7, 1978, pp. 93–97.

(139) Faber, W. R., and Nelson, P. V., "Evaluation of Methods for Solution from Container Root Media", *Communications in Soil Science Plant Analysis*, Vol 15, No. 9, 1984, pp. 1029–1040.

(140) Barbarick, K. A., Sabey, B. R., and Klute, A., "Comparison of Various Methods of Sampling Soil Water for Determining Ionic Salts, Sodium, and Calcium Content in Soil Columns", *Soil Science Society of America Journal*, Vol 43, 1979, pp. 1053–1055.

(141) Wagemann, R., and Graham, B., "Membrane and Glass Fibre Filter Contamination in Chemical Analysis of Fresh Water", *Water Research*, Vol 8, 1974, pp. 407–412.

(142) Jones, J. N., and Miller, G. D., "Adsorption of Selected Organic Contaminants onto Possible Well Casing Materials", *Ground-Water Contamination Field Methods, ASTM STP 963*, ASTM, 1988, pp 185–198.

(143) Barcelona, M. J., Helfrich, J. A., and Garske, E. E., "Verification of Sampling Methods and Selection of Materials for Ground Water Contamination Studies", *Ground-Water Contamination Field Methods, ASTM STP 963*, ASTM, 1988.

The American Society for Testing and Materials takes no position respecting the validity of any patent rights asserted in connection with any item mentioned in this standard. Users of this standard are expressly advised that determination of the validity of any such patent rights, and the risk of infringement of such rights, are entirely their own responsibility.

This standard is subject to revision at any time by the responsible technical committee and must be reviewed every five years and if not revised, either reapproved or withdrawn. Your comments are invited either for revision of this standard or for additional standards and should be addressed to ASTM Headquarters. Your comments will receive careful consideration at a meeting of the responsible technical committee, which you may attend. If you feel that your comments have not received a fair hearing you should make your views known to the ASTM Committee on Standards, 1916 Race St., Philadelphia, PA 19103.

Designation: D 4700 – 91

Standard Guide for Soil Sampling from the Vadose Zone[1]

This standard is issued under the fixed designation D 4700; the number immediately following the designation indicates the year of original adoption or, in the case of revision, the year of last revision. A number in parentheses indicates the year of last reapproval. A superscript epsilon (ε) indicates an editorial change since the last revision or reapproval.

1. Scope

1.1 This guide addresses procedures that may be used for obtaining soil samples from the vadose zone (unsaturated zone). Samples can be collected for a variety of reasons including the following:

1.1.1 Stratigraphic description,
1.1.2 Hydraulic conductivity testing,
1.1.3 Moisture content measurement,
1.1.4 Moisture release curve construction,
1.1.5 Geotechnical testing,
1.1.6 Soil gas analyses,
1.1.7 Microorganism extraction, or
1.1.8 Pore liquid and soils chemical analyses.

1.2 This guide focuses on methods that provide soil samples for chemical analyses of the soil or contained liquids or contaminants. However, comments on how methods may be modified for other objectives are included.

1.3 This guide does not describe sampling methods for lified deposits and rocks (for example, sandstone, shale, lf, granite).

1.4 In general, it is prudent to perform all field work with at least two people present. This increases safety and facilitates efficient data collection.

1.5 The values stated in inch-pound units are to be regarded as the standard. The SI units given in parentheses are for information only.

1.6 *This standard does not purport to address all of the safety problems, if any, associated with its use. It is the responsibility of the user of this standard to establish appropriate safety and health practices and determine the applicability of regulatory limitations prior to use.*

2. Referenced Documents

2.1 *ASTM Standards:*

D 420 Practice for Investigating and Sampling Soil and Rock for Engineering Purposes[2]
D 653 Terminology Relating to Soil, Rock, and Contained Fluids[2]
D 1452 Practice for Soil Investigation and Sampling by Auger Borings[2]
D 1586 Method for Penetration Test and Split-Barrel Sampling of Soils[2]
D 1587 Method for Thin-Walled Tube Sampling of Soils[2]
D 2488 Practice for Description and Identification of Soils (Visual-Manual Procedure)[2]
D 2607 Classification of Peats, Mosses, Humus, and Related Products[2]
D 3550 Method for Ring-Lined Barrel Sampling of Soils[2]
D 4083 Practice for Description of Frozen Soils (Visual-Manual Procedure)[2]
D 4220 Practice for Preserving and Transporting Soil Samples[2]

3. Terminology

3.1 *Definitions:*

3.1.1 Except where noted, all terms and symbols in this guide are in accordance with the following publications. In order of consideration they are:

3.1.1.1 Terminology D 653.

3.1.1.2 *Compilation of ASTM Standard Terminology*,[3] and

3.1.1.3 *Webster's New Collegiate Dictionary*.[4]

3.1.2 For definitions and classifications of soil related terms used, refer to Practice D 2488 and Terminology D 653. Additional terms that require clarification are defined in 3.2.

3.2 *Descriptions of Terms Specific to This Standard:*

3.2.1 *cascading water*—perched ground water that enters a well casing via cracks or uncovered perforations, trickling, or pouring down the inside of the casing.

3.2.2 *sludge*—a water charged sedimentary deposit.

3.2.2.1 *Discussion*—The water-formed sedimentary deposit may include all suspended solids carried by the water and trace elements that were in solution in the water. Sludge usually does not cohere sufficiently to retain its physical shape when mechanical means are used to remove it from the surface on which it deposits, but it may be baked in place and be adherent.

4. Summary of Guide

4.1 Sampling vadose zone soil involves inserting into the ground a device that retains and recovers a sample. Devices and systems for vadose zone sampling are divided into two general groups, namely the following: samplers used in conjunction with hand operated devices; and samplers used

[1] This guide is under the jurisdiction of ASTM Committee D-18 on Soil and k and is the direct responsibility of Subcommittee D18.21 on Ground Water Vadose Zone Investigations.
Current edition approved July 15, 1991. Published September 1991.

[2] *Annual Book of ASTM Standards*, Vol 04.08.

[3] *Compilation of ASTM Standard Terminology*, Sixth edition, ASTM, 1916 Race St., Phila., PA 19103, 1986.

[4] *Webster's New Collegiate Dictionary*, Fifth edition, _____ 1977.

Type of Sampler	Obtains Core Sample Yes	Obtains Core Sample No	Most Suitable Core Types Coh.	Most Suitable Core Types Coh/Granu	Operation in Stony Soils Fair.	Operation in Stony Soils Under	Most Suitable Soil Moisture Conditions Wet	Most Suitable Soil Moisture Conditions Dry	Most Suitable Soil Moisture Conditions Wetr.	Access to Sample Sites During Poor Soil Conditions Yes	Access to Sample Sites During Poor Soil Conditions No	Required Sample Size Sm.	Required Sample Size Lg.	Labor Requirements Sm/L	Labor Requirements Intnsv
A. Drill Rig Samplers															
1. Multipurpose Drill Rig	◆		◆	◆	◆		◆	◆	◆	◆		◆	◆		
2. Split-barrel Drive Sampler	◆		◆		◆			◆			◆		◆		◆
3. Thin-Walled Tube Sampler	◆		◆			◆			◆	◆			◆		◆
4. Piston Sampler	◆		◆			◆	◆			◆			◆		◆
5. Continuous Sample Tube system	◆		◆		◆		◆	◆	◆	◆		◆	◆		◆
6. Hand-Held Power Auger		◆			◆					◆			◆		◆
B. Hand Operated Samplers															
1. Screw-Type Auger		◆				◆	◆			◆		◆		◆	
2. Barrel Auger															
a. Post-Hole Auger		◆	◆		◆		◆			◆			◆	◆	
b. Dutch Auge		◆	◆		◆		◆								
c. Regular Barrel Auger		◆	◆		◆				◆	◆		◆		◆	
d. Sand Auger		◆		◆	◆				◆	◆			◆	◆	
e. Mud Auger		◆	◆		◆		◆			◆			◆	◆	
3. Tube-Type Sampler															
a. Soil Sampling Tube															
(1) Wet Tu	◆					◆	◆			◆				◆	
(2) Dry Tu	◆					◆	◆			◆		◆		◆	
b. Vehmeyer Tube	◆								◆			◆		◆	

FIG. 1 Criteria for Selecting Soil Sampling Equipment

in conjunction with multipurpose or auger drill rigs. This guide discusses these groups and their associated practices.

4.2 The discussion of each device is organized into three sections, describing the device, describing sampling methods, and limitations and advantages of its use.

4.3 This guide identifies and describes a number of sampling methods and samplers. It is advisable to consult available site-specific geological and hydrological data to assist in determining the sampling method and sampler best suited for a specific project. It is also advisable to contact a local firm providing the services required as not all sampling and drilling methods described in this guide are available nationwide.

5. Significance and Use

5.1 Chemical analyses of liquids, solids, and gases from the vadose zone can provide information on the presence, possible source, migration route, and physical-chemical behavior of contaminants. Remedial or mitigating measures can be formulated based on this information. This guide describes devices and procedures that can be used to obtain vadose zone soil samples.

5.2 Soil sampling is useful for the reasons presented in Section 1. However, it should be recognized that the general method is destructive, and that resampling at an exact location is not possible. Therefore, if a long term monitoring program is being designed, other methods for obtaining samples should be considered.

6. Criteria for Selecting Soil Samplers

6.1 Important criteria to consider when selecting devices for vadose zone soil sampling include the following:

6.1.1 Type of sample: An encased core sample, an uncased core sample, a depth-specific representative sample, or a sample according to requirements of the analyses,

6.1.2 Sample size requirements,

6.1.3 Suitability for sampling various soil types,

6.1.4 Maximum sampling depth,

6.1.5 Suitability for sampling soils under various moisture conditions,

6.1.6 Ability to minimize cross contamination,

6.1.7 Accessibility to the sampling site, and

6.1.8 Personnel requirements.

6.2 The sampling devices described in this guide have been evaluated for these criteria. The results are summarized in Fig. 1.

7. Sampling with Hand Operated Devices

7.1 These devices, that have mostly been developed for agricultural purposes, include:

7.1.1 Screw-type augers,

7.1.2 Barrel augers,

7.1.3 Tube-type samplers,

7.1.4 Hand held power augers, and

7.1.5 Trench sampling with shovels in conjunction with machine excavations.

7.2 The advantages of using hand operated devices over drill rigs are the ease of equipment transport to locations with poor vehicle access, and the lower costs of setup and decontamination. However, a major disadvantage is that these devices are limited to shallower depths than drill rigs.

7.3 *Screw-Type Augers:*

7.3.1 *Description*—The screw or ship auger is essentially a small diameter (for example, 1.5 in. (3.81 cm)) wood auger from which the cutting side flanges and tip have been removed (**1**)[5] (see Fig. 2(*a*)). According to the Soil Survey Staff (**1**), the spiral part of the auger should be about 7 in. (18 cm) long, with the distances between flights about the same as the diameter (for example, 1.5 in.) of the auger. This facilitates measuring the depth of penetration of the tool. Variations on this design include the closed spiral auger and the Jamaica open spiral auger (**2**) (see Fig. 2(*b*) and 1(*c*)). The

[5] The boldface numbers in parentheses refer to the list of references at the end of the text.

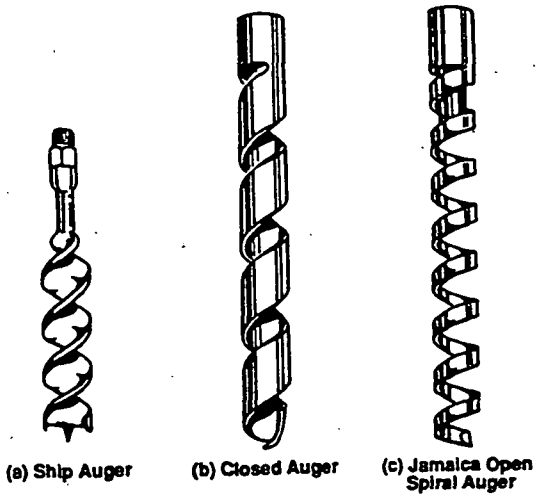

FIG. 2 Screw Type Augers

auger is welded onto a length of solid or tubular rod. The upper end of this rod is threaded, to accept a handle or extension rods. As many extensions are used as are required to reach the target sampling depth. The rod and the extensions are marked in even increments (for example, in 6-in. (15.24-cm) increments) above the base of the auger to aid in determining drilling depth. A wooden or metal handle fits into a tee-type coupling, screwed into the uppermost extension rod.

7.3.2 *Sampling Method*—For drilling, the auger is rotated manually. The operator may have to apply downward pressure to start and embed the auger; afterwards, the auger screws itself into the soil. The auger is advanced to its full length, and then pulled up and removed. Soil from the deepest interval penetrated by the auger is retained on the auger flights. A sample can be collected from the flights using a spatula. A foot pump operated hydraulic system has been developed to advance augers up to 4.5 in. (11.43 cm) in diameter. This larger diameter allows insertion of other sampling devices into the drill hole, once the auger is removed, if desired (3).[6]

7.3.3 *Comments*—Samples obtained with screw-type samplers are disturbed and are not truly core samples. Therefore, the samples are not suitable for tests requiring undisturbed samples, such as hydraulic conductivity tests. In addition, soil structures are disrupted and small scale lithologic features cannot be examined. Nevertheless, screw-type samplers are still suitable for use in collecting samples for the purpose of detecting contaminants. However, it is difficult to avoid transporting shallow soils downward when reentering a drill hole. When representative samples are desired from a discrete interval, the borehole must be made large enough to insert a sampler and extend it to the bottom of the borehole without touching the sides of the borehole. It is suggested that a larger diameter auger be used to advance and clear the borehole, then a smaller diameter auger sampler be used to obtain the sample. Screw-type augers work better in wet, cohesive soils than in dry, loose soils. Sampling in very dry (for example, powdery) soils may not be possible with these augers as soils will not be retained on the auger flights. Also, if the soil contains gravel or rock fragments larger than about one tenth of the hole diameter, drilling may not be possible (4).

7.4 *Barrel Augers:*

7.4.1 *Description*—The barrel auger consists of a bit with cutting edges welded to a short tube or barrel within which the soil sample is retained, welded in turn to shanks. The shanks are welded to a threaded rod at the other end. Extension rods are attached as required to reach the target sampling depth. Extensions are marked in increments above the base of the tool. The uppermost extension rod contains a tee-type coupling for a handle. The auger is available in carbon steel and stainless steel with hardened steel cutting edges (5, 6).

7.4.2 *Sampling Method*—The auger is rotated to advance the barrel into the ground. The operator may have to apply downward pressure to keep the auger advancing. When the barrel is filled, the unit is withdrawn from the soil cavity and a sample may be collected from the barrel.

[6] This reference is manufacturer's literature, and it has not been subjected to technical review.

7.4.3 *Comments*—Barrel augers generally provide larger samples than screw-type augers. The augers can penetrate shallow clays, silts, and fine grained sands (7).[6] The augers do not work well in gravelly soils, caliche, or semi-lithified deposits. Samples obtained with barrel augers are disturbed and are not core samples. Therefore, the samples are not suitable for tests requiring undisturbed samples, such as hydraulic conductivity tests. Nevertheless, the samplers are still suitable for use in collecting samples for the purpose of detecting contaminants. Because the sample is retained inside the barrel, there is less of a chance of mixing it with soil from a shallower interval during insertion or withdrawal of the sampler. The following are five common barrel augers:

7.4.3.1 Post-hole augers (also called Iwan-type augers),

7.4.3.2 Dutch-type augers,

7.4.3.3 Regular or general purpose barrel augers,

7.4.3.4 Sand augers, and

7.4.3.5 Mud augers.

7.4.4 *Post-Hole Augers*—The most readily available barrel auger is the post-hole auger (also called the Iwan-type auger) (8). As shown in Fig. 3, the barrel consists of two-part cylindrical leaves rather than a complete cylinder and is slightly tapered toward the cutting bit. The taper and the cupped bit help to retain soils within the barrel. The barrel is available with a 3 to 12-in. (7.62 to 30.48-cm) diameter. There are two types of drilling systems, one has a single rod and handle, and the other has two handles. In stable, cohesive soils, the auger can be advanced up to 25 ft (7.62 m) (8).

7.4.5 *Dutch-Type Augers*—The Dutch-type auger (commercially developed by Eijkelkamp) is a smaller variation of the post-hole auger design. As shown in Fig. 4, the pointed bit is continuous with two, narrow part-cylindrical barrel segments, welded onto the shanks. The barrel generally has a 3 in. (7.62 cm) outside diameter. This tool is best suited for sampling wet, clayey soils.

7.4.6 *Regular or General Purpose Barrel Augers*—A version of the barrel auger commonly used by soil scientists and county agricultural agents is depicted in Fig. 5(*a*) and (*b*). As shown, the barrel is a complete cylinder. As with the post-hole auger, the cutting blades are cupped so that soil is loosened and forced into the barrel as the unit is rotated and pushed into the ground. Each filling of the barrel corresponds to a depth of penetration of 3 to 5 in. (7.62 to 12.70 cm) (1). The most popular barrel diameter is 3.5 in. (8.89 cm), but sizes ranging from 1.5 to 7 in. (3.81 to 17.78 cm) are available (6).[6] Plastic, stainless steel, PTFE (polytetrafluoroethylene) or aluminum liners can also be used (6).[6] Extension rods are available in 4 ft (1.22 m) lengths. The rods can be made from standard black pipe, from lightweight conduit or from seamless steel tubing. The extensions have evenly spaced marks to facilitate determining sample depth. The regular barrel auger is suitable for use in loam type soils.

7.4.7 *Sand Augers*—For dry, sandy soils it may be necessary to use a variation of the regular barrel auger that includes a specially-formed bit to retain the sample in the barrel (see Fig. 5(*c*)). Sand augers with 2, 3, or 4-in. (5.08, 7.62, or 10.16-cm) diameters are available (5).[6]

7.4.8 *Mud Augers*—Another variation on the regular barrel auger design is available for sampling wet, clayey soils. As shown in Fig. 5(*d*), the barrel is designed with open sides to facilitate extraction of samples. The bits are the same as those used on the regular barrel auger (6).[6] Mud augers with 2, 3, or 4-in. (5.08, 7.62, or 10.16-cm) diameters are available (5).[6]

7.5 *Tube-Type Samplers:*

7.5.1 Tube-type samplers generally have proportionally smaller diameters and greater body lengths than those of barrel augers.

7.5.2 For sampling, these units are perched into the soil causing the tube to fill with material from the interval penetrated. The assembly is then pulled to the surface and a sample can be collected from the tube. Since the device is not

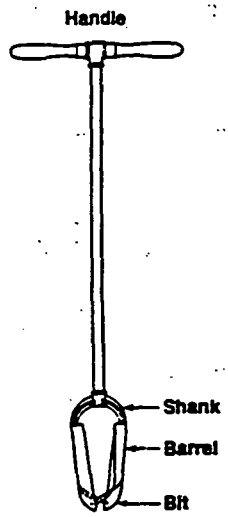

FIG. 3 Post-Hole Type Barrel Auger

000369

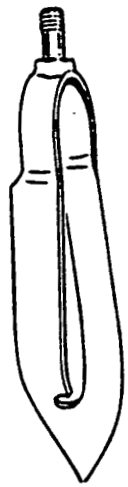

FIG. 4 Dutch Type Auger

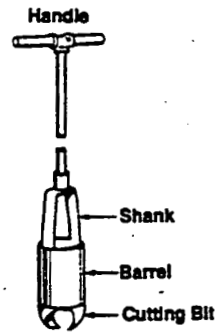

(a) Regular Barrel Auger

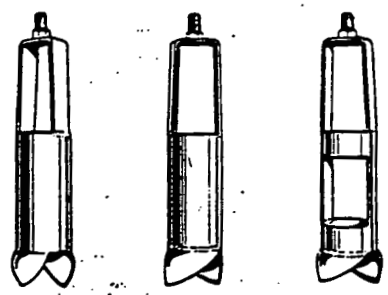

(b) Regular Barrel Auger (c) Sand Auger (d) Mud Auger

FIG. 5 Barrel Auger Variations and Soil Moisture

rotated, a nearly undisturbed sample can be obtained. Commercial units are available with foot lever attachments, a hydraulic apparatus, or drop-hammers to aid in driving the sampler into the ground (5)[6]. Vibratory heads have also been developed to advance tube-type samplers (9).[6]

7.5.3 These units are not as suitable for sampling in compacted, gravelly soils as are the barrel augers. They are preferred if an undisturbed sample is required. Commonly used varieties of the tube type samplers include:

7.5.3.1 Soil sampling tubes (also called Lord samplers),

7.5.3.2 Veihmeyer tubes (also called King tubes),

7.5.3.3 Thin-walled tube samplers (also called Shelby tubes),

7.5.3.4 Ring-lined barrel samplers, and

7.5.3.5 Piston samplers.

7.5.4 *Soil Sampling Tubes:*

7.5.4.1 *Description*—As depicted in Fig. 6, the soil sampling tube consists of a hardened cutting tip, a cut-away barrel, and an uppermost threaded segment. The cut-away barrel allows textural examination and easy removal of soil samples. Generally, the tube is constructed from high strength alloy steel (10).[6] The samplers are available with 6, 12, 15, 18, and 24-in. (15.24, 30.48, 38.10, 45.72, 60.96-cm) lengths (5, 6). The tubes are available with 1.13 or 0.88-in. (2.87 or 2.22-cm) outside diameter. Two modified versions of the tip are available, for sampling in wet or dry soils. The

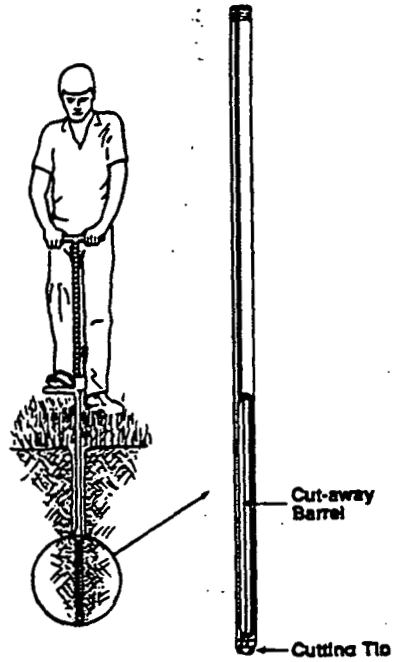

FIG. 6 Soil Sampling Tube

sampling tube is attached to extension rods to attain the target sampling depth. A cross-handle is attached to the uppermost rod. Extension rods are made of lightweight, durable metal. They are available in a variety of lengths depending on the manufacturer. Markings on the extensions and the sampler facilitate determining sample depths.

7.5.4.2 *Sampling Method*—The sampler is pushed into the ground by leaning on the unit's handle. Once the sampler has reached the bottom of the sampling interval, it is twisted to break soil continuity at the tip. Depending on the type of cutting edge, the tube sampler may obtain samples varying in diameter from 0.69 to 0.75 in. (1.75 to 1.91 cm).

7.5.4.3 *Comments*—The soil sampling tube works best in soft, clayey, cohesive soils. If the soil contains cobbles or rock fragments larger than about one-half the cutting tip diameter, satisfactory sampling may not be possible. If the soil is cohesionless, it will not be retained in the tube. With time, the cutting tip will be damaged and worn dull. Most units are designed so that this part can be replaced.

7.5.5 *Veihmeyer Tubes:*

7.5.5.1 *Description*—The Veihmeyer tube is a long, complete cylinder. As shown in Fig. 6, this unit consists of a bevelled tip, that is threaded into the lower end of the tube, and a drive head threaded onto the upper end of the tube. The sampler is constructed of hardened steel. The tube is generally marked in even increments (for example, 1 ft or 0.30 m). These samplers are available in 4 to 16-ft (1.22 to 4.88-m) lengths with a 0.75-in. (1.91-cm) inside diameter.

7.5.5.2 *Sampling Method*—The lower guide rod of the drop hammer is slipped into the upper tube, through the drive head (see Fig. 7). The hammer is used to pound the sampler into the ground. The sampler is then retrieved by pulling or jerking up on the hammer to force the sampler out of the soil cavity. Samples are extruded by forcing a rod through the tube.

7.5.5.3 *Comments*—Prior to sampling, the inside of the tube is sometimes coated with a lubricant to fac[illegible] extrusion. However, the types of analyses to be perform[illegible] the samples should be considered to determine i[illegible] presence of lubricant will cause interference. Because the Veihmeyer sampler is a solid-walled tube and is fitted with a drop hammer, it can generally be used in more resistant soils than the soil sampling tube.

7.5.6 *Thin-Walled Tube Samplers:*

7.5.6.1 *Description*—Thin-walled tube (Shelby Tube) samplers are readily available with 2, 3, and 5-in. (5.08, 7.62, and 12.70-cm) outside diameters and are commonly 30 in. (76.20 cm) long. The 3 by 30-in. (7.62 by 76.20-cm) outside diameter long sampler is most common. The advancing end of the sampler is rolled inwardly and has a cutting edge with a smaller diameter than the tube inside diameter. The cutting edge inside diameter reduction, defined as a "clearance ratio," is usually in the range of 0.0050 to 0.0150 or 0.50 to 1.50 % (Refer to Practice D 1587). The sampler tube is usually connected with set screws to a sampler head that in turn is threaded to connect with extension rods. Plastic and PTFE sealing caps for use after sampling are readily available for the 2, 3, and 5-in. (5.08, 7.62, and 12.70-cm) diameter tubes (refer to Practice D 4220). Shelby tubes are commonly available in carbon steel but can be manufactured from other metal (see Fig. 8).

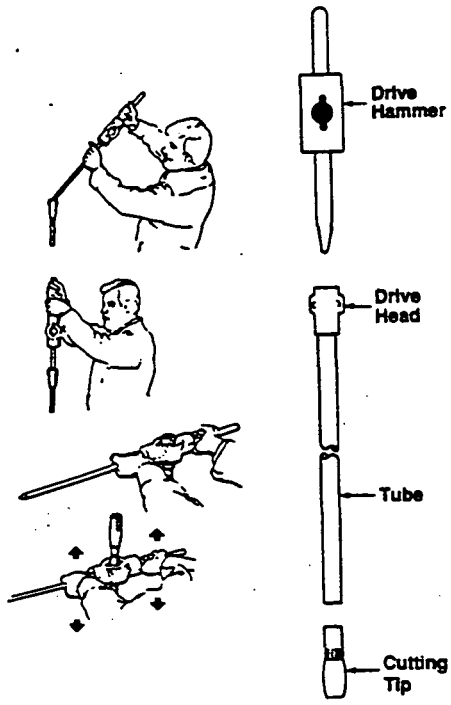

FIG. 7 Veihmeyer Tube

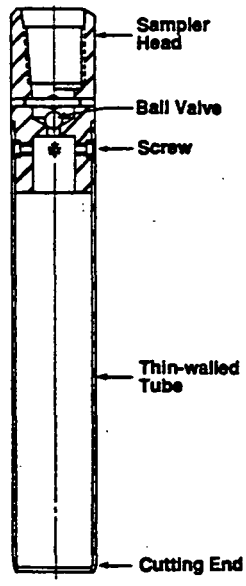

FIG. 8 Thin-Walled Tube Sampler

7.5.6.2 *Sampling Method*—The Shelby tube is pushed into soil by hand, with a jack-like system or with a hydraulic piston. The sample recovered is often less than the distance pushed, that is, the recovery ratio is less than 1.0. The recovery ratio is less than 1.0 because of soil compaction during sampling, and because friction between soil and the inner tube walls becomes greater than the shear strength of the soil in front of the tube. Consequently, soil in front of the advancing end of the tube is displaced laterally rather than entering the tube (11). In general, shorter tubes provide less-disturbed samples than longer tubes. Samples are extruded from the Shelby tube with a hydraulic ram. As with all sampling devices, the most disturbed portion of the sample in contact with the tube is considered unrepresentative. Wilson et al. (12) developed a paring device to remove this outer layer of the core during extrusion.

7.5.6.3 *Comments*—Shelby tubes are best used in clays, silts, and fine-grained sands. If the soils are cohesionless, they may not be retained in the tube. If firm to very hard soils are encountered, driving (hammering) the sampler may be required. However, this should be avoided as the tube may buckle under the drive stress.

7.5.7 *Ring-Lined Barrel Samplers:*

7.5.7.1 *Description*—As described in Practice D 3550, the ring-lined barrel sampler consists of a one piece barrel or two split barrel halves, a drive shoe, rings, and a sampler head (see Fig. 9). The rings, that are usually brass, fit snugly inside the barrel and are designed to be directly inserted into geotechnical testing apparatuses when removed from the barrel. Most samplers are designed to hold at least two rings. The barrel is commonly 3.5 in. (8.89 cm) inside diameter and 3.94 to 5.91 in. (10 to 15 cm) long (5).[6] With these lengths, the barrel can be fitted with a variety of liners ranging in length from 1 to 2.36 in. (2.54 to 6 cm).

7.5.7.2 *Sampling Method*—The ring-lined barrel sampler can be driven or pushed into soil. Once retrieved, the sampler is disassembled, and the sample-filled rings are removed. The rings are usually removed as one unit and placed into a capped container. Alternately, the individual soil-filled rings can be capped with plastic or PTFE and then sealed with wax or adhesive tape (refer to Practice D 4220).

7.5.7.3 *Comments*—Because barrel samplers are more rigid than thin-walled tubes, they can be driven into hard soils and soils containing sands and gravels that might damage thin-walled tubes. The sampler provides samples in rings which can be handled without further disturbance of the soil. Because of this, these devices are most often used when geotechnical or chemical analyses are to be performed.

7.5.8 *Piston Samplers:*

7.5.8.1 *Description*—Locally saturated (for example, by perched ground water), or cohesionless soils, and very soft soils or sludges may not be retained in most samplers, even when fitted with retainer baskets or flap valves. Piston samplers can be used in these situations. The sampler consists of a sampling tube, extension pipe attached to the tube, an internal piston, and rods connected to the piston and running through the extension pipe (see Fig. 10). These samplers are often built, as needed, out of common PVC (for use in sludge) or steel pipe fittings. The sampling tube commonly has a 0.75 to 3-in. (1.91 to 7.62-cm) inside diameter and is 8 in. to 9 ft (20.32 cm to 2.74 m) long (13). A variation designed for sampling peat has a cone shaped piston (8).

7.5.8.2 *Sampling Method*—The sampler can be pushed into the ground with the handle or driven into the ground with a drop hammer (13). As the tube is advanced, the piston is held stationary or pulled upward with the attached rods. Once the tube has been advanced through the sampling interval, it is rotated to break suction that might have developed between the soil and the outside wall of the tube. The sampler is then pulled to the surface keeping the piston rod fixed with respect to the extension pipe. The sample is retained because of suction that develops between the piston and the sample. Upon retrieval, the sample is extruded by

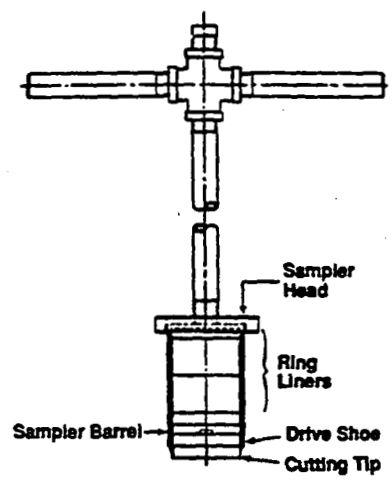

FIG. 9 Hand Operated Ring-Lined Barrel Sampler

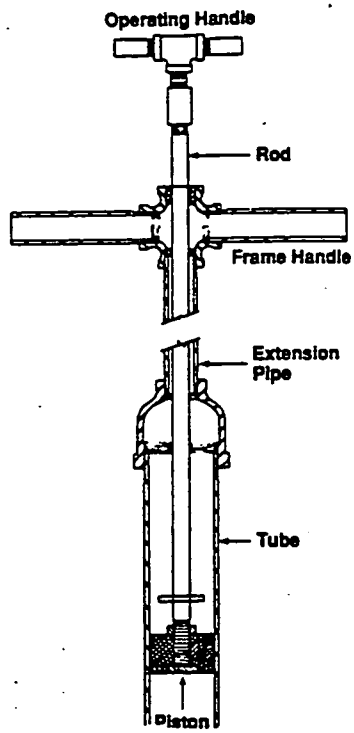

FIG. 10 Hand Operated Piston Sampler

using the piston to force the sample out of the tube. Sharma and De Dalta (14) described a cylindrical sampler for use in puddled soils that would flow back out of most samplers. The design includes a basal shutter that retains the sample while the sampler is withdrawn from the soil.

7.5.8.3 *Comments*—Because the sampler depends on development of suction between the sample and the piston, it may not work in unsaturated, coarse-grained sands and gravels. This is due to the high air permeability of such material that prevents the creation of high suction.

7.6 *Hand Held Power Augers:*

7.6.1 *Description*—A very simple, commercially available auger consists of a solid flight auger attached to and driven by a small air-cooled engine (see Fig. 11). Two handles on the head assembly allow two operators to guide the auger into the soil. Throttle and clutch controls are integrated into grips on the handles. Augers are available with diameters ranging from 2 to 16 in. (5.08 to 40.64 cm). The auger sections are commonly 3 ft (0.91 m) long.

7.6.2 *Sampling Method*—As the auger rotates into soil, cuttings advance up the flights and are discharged at the surface. Soil samples can be collected from the surface discharge, or from the auger flights after pulling the auger out of the ground. Alternatively, samples can be collected with other samplers (for example, a thin-walled tube) after auger removal.

7.6.3 *Comments*—As discussed in 7.3, if samples are collected from surface discharge or from the flights, they are disturbed and are not suitable for some uses. In addition, if samples are collected from surface discharge, it is difficult to

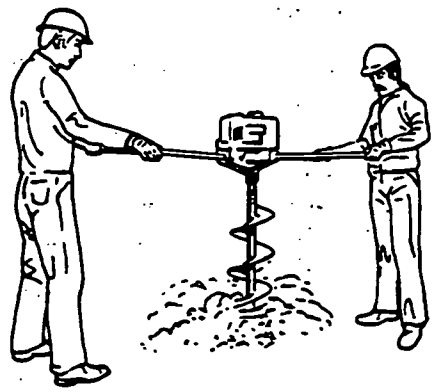

FIG. 11 Hand Held Power Auger

determine the depth from which the soil came and uncontrolled mixing of soil from different depth intervals can occur. The auger operates well in most soils. However, if the soil is cohesionless, it may not be retained on the flights and sampling in that fashion may not be possible. If the soil contains cobbles or boulders, drilling may not be possible. If the auger "hangs up" on an obstruction, the machine will start to rotate at the surface. Otherwise, the operator should not attempt to stop rotation of the machine by grabbing the handles. An alternate design that transfers the torque to a separate engine prevents this problem (15).[6] As previously stated, it is prudent to perform the field work with at least two people present.

7.7 *Trench Sampling:*

7.7.1 *Description*—Soils may be sampled from a trench or pit excavated for that purpose. Excavation is usually performed by a backhoe, and samples are collected with knives, trowels, or shovels. Occasionally, samples are collected from the sides or the bottom of the trench or pit with hand augers or tube-type samplers.

7.7.2 *Sampling Method*—Excavation is performed under the guidance of the sampling technician. Sampling is performed only after the backhoe has moved away from the trench or pit. When the trench or pit is in unstable material or is more than a few feet deep, the sampling technician should only enter the trench or pit after it has been shored up or the sidewalls have been cut back to within the angle of repose (see Occupational Safety and Health Administration regulations). Otherwise, samples are more commonly collected at the surface from the bucket of the backhoe as excavation occurs.

7.7.3 *Comments*—The maximum sampling depth for the trench or pit method is dictated by the reach of the backhoe, the soil type and the moisture content of the soil. Maximum depths of up to 20 ft (6.10 m) can be obtained in moist clays. Maximum depths of less than 10 ft (3.05 m) are common in dry sands. Samples collected from the backhoe bucket should be taken from the center of the material to prevent collecting soil contaminated by the bucket surface, and to prevent inclusion of materials that may have fallen from above the desired sampling interval. However, when this is done, it is difficult to accurately estimate the depth from which the sample was obtained. Trenches are useful for obtaining lithologic information since cross sections of the vadose zone can be studied and photographed. Trench or pit sampling is often used in areas with difficult access since backhoes are designed to travel on rough terrain. However, because the process involves excavating a much larger hole than drilling methods, chances of encountering underground utilities are increased, and proper backfilling and compaction of the trench is often very difficult.

8. Multipurpose and Auger Drill Rigs

8.1 Vadose zone samplers used in conjunction with drill rigs are identical to those used to sample below the table. However, commonly used drill rigs such as cab and rotary units are not recommended as they gen require the introduction of drilling fluids to the soils to be sampled. Air rotary drilling is also undesirable for obtaining samples for pore liquid or gas extraction. In most cases, hollow-stem augers with some type of cylindrical sampler provide the greatest level of assurance that soil sampled within the vadose zone was not carried downward by the drilling or sampling process. For some situations, such as sampling firm to very hard ground, using multipurpose auger-core-rotary drill rigs will be necessary. For some geologic circumstances the use of solid stem augers will provide an adequate drilling method.

8.2 *Multipurpose Auger-Core-Rotary Drill Rigs:*

8.2.1 Multipurpose auger-core-rotary drill rigs are generally equipped with rotary power and vertical feed control to advance both hollow-stem augers and continuous flight (solid stem) augers to depths greater than 100 ft (30.48 m). These same drills have secondary capability for rotary and core drilling. The larger of these drills are typically mounted on 20 000 to 30 000-lb (9070 to 13605-kg) GVW trucks. The same multipurpose drill rigs are available on both rubber-tired and track-driven all-terrain carriers. The smaller of the multipurpose drills are typically mounted on trailers or one-ton, 4 by 4 trucks.

8.2.2 When equipped with augers, the sampling process is identical to that for auger drill rigs. When multipurpose auger-core-rotary drill rigs or auger drill rigs are used, speed of drilling and sampling is much greater than hand operated equipment. Therefore it is useful to ha larger crew to efficiently handle, log, identify, and prese the samples.

8.3 *Auger Drill Rigs*—Auger drill rigs are similar to multipurpose auger-core-rotary drill rigs. They are manufactured specifically for efficient auger drilling but do not have the pumps and hoists that are required for efficient core or rotary drilling. The rigs can be equipped with either solid stem or hollow stem augers. There are relatively few auger drills available in comparison to multipurpose auger-core-rotary drills.

9. Auger Drilling and Sampling

9.1 *Solid Stem Auger Drilling and Sampling:*

9.1.1 *Description*—The tools used for solid-stem auger drilling include: auger sections, the drive cap, and the cutter head (see Fig. 12). Auger sections are typically 5 ft (1.52 m) long and are interchangeable for assembly in an articulated but continuously flighted column. Augers are available in diameters up to 24 in. (60.96 cm). The cutter head is attached to the lowermost or leading flight of the auger column. It is about 0.5 in. (1.25 cm) larger in diameter than the flights. Head types include fish tail or drag bits for use in

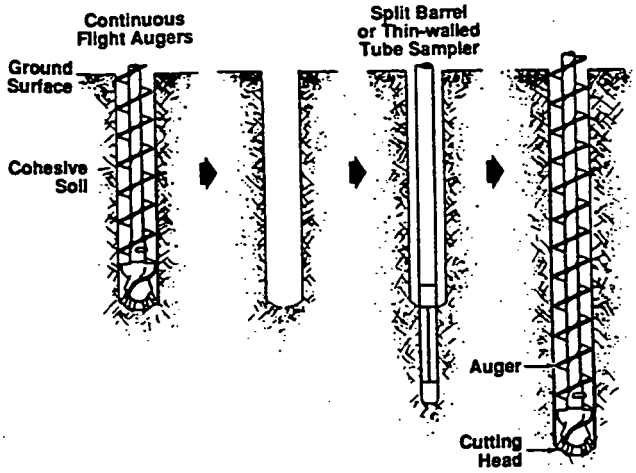

FIG. 12 Solid Stem Auger Sampling

cohesionless materials, and clay or stinger bits for use in more consolidated material (16).

9.1.2 *Sampling Method*—As the auger column is rotated into soil, cuttings are retained on the flights. The augers are then removed from the hole and samples are taken from the retained soil. Samples obtained with solid stem augers are disturbed and are not core samples. Therefore, the samples are not suitable for analyses requiring undisturbed samples, such as hydraulic conductivity tests. This sampling method can provide an adequately clean borehole in some clayey and silty soils. However, when using the method in caving or squeezing ground, the quality and the origin of the recovered samples are questionable because soils from different intervals may have mixed. Therefore, when representative samples from discrete depths are desired, the borehole should be made large enough to insert a smaller diameter auger or another sampler (for example, a thin-walled tube) to the bottom of the borehole, without touching the sides of the borehole (see Fig. 11), to collect a discrete sample from the interval ahead.

9.1.3 *Comments*—Typical drilling depths with solid stem augers range from 50 to 120 ft (15.24 to 36.58 m). The greater drilling depths are attained in firm, silty and clayey soils. However, the depth to which the hole will remain open for sampling once the auger column has been removed is usually less than the maximum drilling depth. If cascading water or cohesionless soils are encountered, it can be expected that the hole will cave at that depth. The sample depth measurement, as taken from its location on an auger, is not precise. This is because soil may move up the flights in an uneven fashion as the auger column is advanced. As with hollow-stem augers, solid stem augers are often painted by the driller or manufacturer. It is prudent to remove this paint before drilling. The majority of the paint can be removed by drilling through sandy soils or by sand blasting. As with all sampling devices, decontamination (for example, steam cleaning) should be performed between holes when chemical analyses are to be performed on the samples. This is especially important with the solid stem auger as it doubles as the drilling and sampling tool.

9.2 *Bucket Auger Drilling and Sampling:*

9.2.1 *Description*—The bucket auger is a large diameter cylindrical bucket with auger-type cutting blades on the bottom. The bucket can have a diameter ranging from 12 in. (30.48 cm) up to 6 ft (1.83 m) with lengths varying from 24 to 48 in. (60.96 to 121.92 cm) (17). The bottom is hinged to allow cuttings to be emptied out (see Fig. 13).

9.2.2 *Sampling Method*—The bucket is rotated to depth in the vadose zone until the bucket is full. Therefore, depending on the bucket length, sampling intervals can range from 24 to 48 in. (60.96 to 121.92 cm). Sampling consists of extracting small diameter core samples from the interior of the bucket after lowering the full bucket to the ground (see Section 7). This approach minimizes problems with undiscrete mixing of discrete portions to be sampled.

9.2.3 *Comments*—The bucket auger is best suited for sampling from relatively stable clays as the caving problems discussed in 9.1.3 are amplified by the larger hole diameter. Boulders can impede drilling and may have to be individually removed from the hole before sampling can continue (15)[6]. Generally, boulders up to one-third or one-fourth the bucket diameter can be picked up by the bucket. Common sampling depths are less than 50 ft (15.24 m) but holes up to 250 ft (76.20 m) deep have been drilled (16, 17).

9.3 *Hollow Stem Auger Drilling and Sampling:*

9.3.1 *Description*—Outer components of the hollow stem auger system include: hollow auger sections, the hollow auger head, and the drive cap. Inner components include: the pilot assembly, the center rod column, and the rod-to-cap adaptor (see Fig. 14). The auger head contains replaceable carbide teeth that pulverize the formation during flight

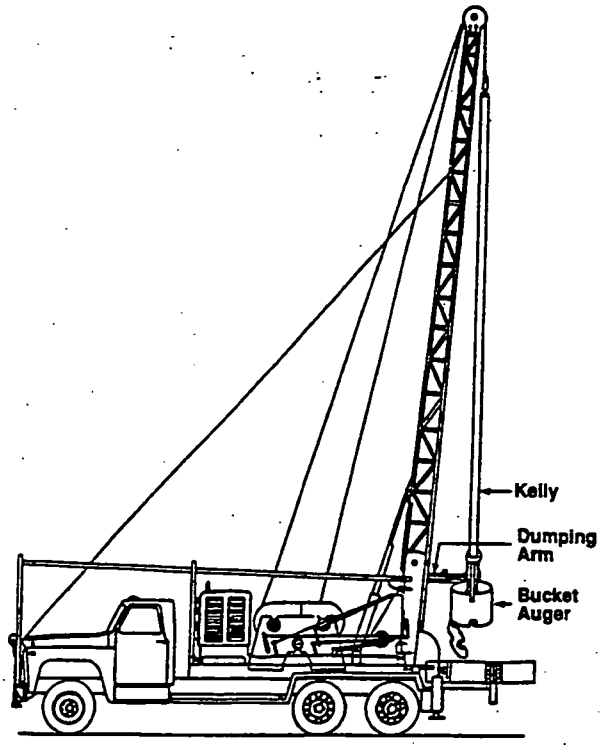

FIG. 13 Bucket Auger and Drilling Rig

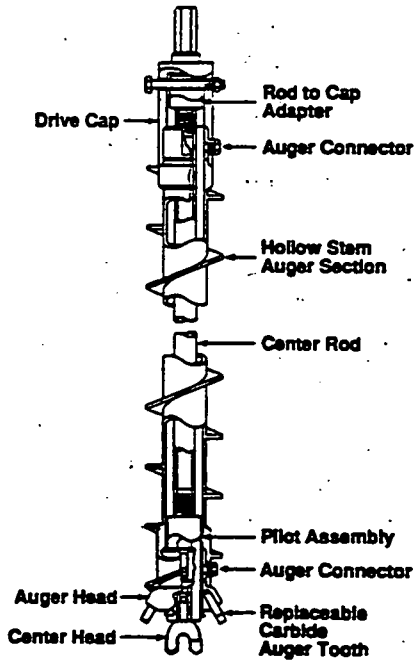

FIG. 14 Hollow-Stem Auger Components

column rotation. The cutting diameter is somewhat greater than the flighting diameter because of the protruding teeth. Auger sections are typically 5 ft (1.52 m) long and are interchangeable for assembly in an articulated but continuously flighted column. Drilling progresses in 5 ft (1.52 m) or shorter increments and sampling can be accomplished at any depth within that increment. Upon advancement of a 5 ft (1.52 m) increment, another 5 ft (1.52 m) section of hollow-stem auger and center rod is added. Hollow-stem augers are readily available with 2.25, 2.75, 3.25, 3.75, 4.25, 6.25, and 8.25-in. (5.72, 6.99, 8.26, 9.53, 10.80, 15.88, and 20.96-cm) inside diameters.

9.3.2 *Sampling Method*—The auger column and pilot assembly are advanced to the top of the desired sampling interval. Sampling is accomplished by removing the pilot assembly and center rod, if they are used, and inserting the sampler through the hollow stem of the auger column (see Fig. 15). The sampler may be lowered to the sampling depth by attaching it to center rods or by using a wireline assembly (12). When the sampler is attached to center rods, a sample is collected by pushing or driving the sampler into undisturbed soil with the rig hydraulic system or with a drop hammer. When a wireline is used, the sampler is locked into place ahead of the lower-most auger and advanced into the sampling interval by rotating the auger column (18).[6] Hollow stem augers with a 6.25-in. (15.88-cm) inside diameter allow the use of 5-in. (12.70-cm) outside diameter Shelby tubes and 4.5-in. (11.43-cm) outside diameter split barrel samplers (see 9.4).

9.3.3 *Comments*—The purpose of the center head (pilot) assembly is to prevent soils from entering the auger column as it is advanced (19). Driscoll (17) suggests that the assembly may be omitted when drilling through hard, silty and clayey soils as these materials will usually form a 2 to 4 in. (5.08 to 10.16 cm) long plug at the auger opening. However, Hackett (19) recommends that the pilot assembly be used when detailed samples are required. When perched water is encountered, "heaving sands" that move up into the auger column upon pilot assembly removal during sampling, may be a concern. Various one-way plugs that allow sampling, but that prevent sand from moving into the auger column, are described in Hackett (19). The important capability of being able to obtain samples that do not contain mixed material from shallow sources in the hole is enhanced by using the hollow-stem auger method. However, because the sections are hollow, decontamination of the auger interiors between holes to prevent cross contamination is difficult. High pressure steam cleaners are usually necessary to remove caked-on soils and contaminants. Hollow stem augers may advance rapidly through unconsolidated materials.

9.4 *Sampling Devices:*

9.4.1 Sampling devices used in conjunction with hollow stem augers and occasionally in holes advanced by solid stem augers include:

9.4.1.1 Thin-walled tube samplers (also called Shelby tubes),

9.4.1.2 Split-barrel drive samplers (also called Split spoons),

9.4.1.3 Ring-lined barrel samplers,

9.4.1.4 Continuous sample tube systems, and

9.4.1.5 Piston samplers.

9.4.2 These samplers are either pushed or driven in sequence with an increment of drilling or advanced simultaneously with the advance of a hollow stem auger column.

9.4.3 *Thin-Walled Tube Samplers:*

9.4.3.1 *Description*—The thin-walled tube sampler consists of a tube connected to a head with screws. The head is threaded to connect with standard drill rods. The head contains a ball check valve. Thin-walled tube (Shelby tube) samplers are readily available with 2, 3, and 5-in. (5.08, 7.62, and 12.70-cm) outside diameter and are commonly 30 in. (76.20 cm) long. The 3 by 30 in. (7.62 by 76.20 cm) outside diameter long sampler is most common. The advancing end of the sampler is constructed with an inward lip, machined to a cutting edge, that has a smaller diameter than the tube inside diameter. The cutting edge inside diameter reduction, defined as a "clearance ratio," is usually in the range of 0.0050 to 0.0150 or 0.50 to 1.50 % (refer to Practice D 1587). PTFE or plastic sealing caps and other sealing devices for use after sampling are readily available for the 2, 3, and 5-in. (5.08, 7.62 and 12.70-cm) diameter tubes (refer to Practice D 4220). Shelby tubes are commonly available in carbon steel but can be manufactured from other metal (see Fig. 8).

9.4.3.2 *Sampling Methods*—When a Shelby tube is pushed into soil, the length of the sample recovered is often less than the distance pushed, that is, the recovery ratio is less than 1.0 (see 7.5.6.2). In addition, a portion of the sample frequently remains in the borehole after retrieval of the sampler. This is due to suction that develops at the sampler-soil interface. This suction may be broken by twisting the

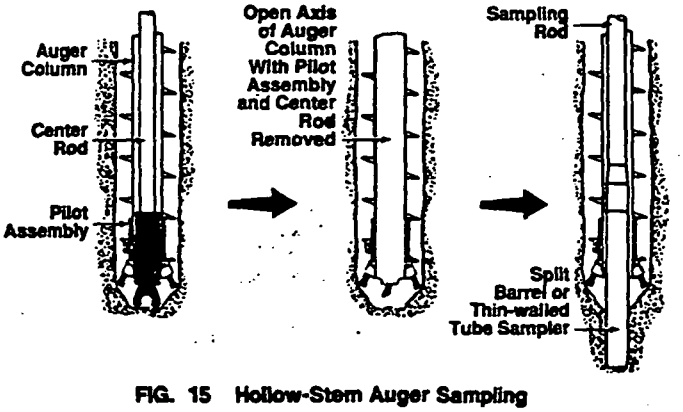

FIG. 15 Hollow-Stem Auger Sampling

sampler prior to retrieval or by advancing the auger column below the base of the sampler before retrieval (20). Samples are extruded from the Shelby tube with a hydraulic ram. As with all sampling devices, the portion of the sample in contact with the tube is considered disturbed and unrepresentative. Wilson et al. (12) developed a paring device to remove this outer layer of the core during extrusion.

9.4.3.3 *Comments*—The ball check valve was originally intended to provide a vent for drilling fluids when pushing the tube into soil, and also to prevent the column of fluid within the drill stem from forcing the sample out of the tube during retrieval. Since drilling fluids are not used when sampling in the vadose zone, these considerations are not important. However, the valve does provide a vent for air displaced as the sampler is pushed into soil. Shelby tubes are best used in clays, silts, and fine grained sands. They can be pushed with the hydraulic system of most drill rigs in fine grained sands that are loose to moderately consolidated or in clays and silts that are soft to firm. If the soils are cohesionless, they may not be retained in the tube. If consolidated or hard soils are encountered, driving the sampler may be required. However, some tubes may buckle under the drive stress. A spring-loaded barrel has been developed to protect the Shelby tube from buckling when sampling these soils (21).[6]

9.4.4 *Split-Barrel Drive Samplers:*

9.4.4.1 *Description*—The split-barrel drive sampler consists of two split-barrel halves, a drive shoe, and a [illegible]pler head containing a ball check valve, all of which are [illegible]led together (see Fig. 15). The most common size ha[illegible]in. (5.08-cm) outside diameter and a 1.5-in. (3.81-cm) inside diameter split barrel with a 1.375-in. (3.49-cm) inside diameter drive shoe. This sampler is used extensively in geotechnical exploration (Refer to Method D 1586). When fitted with a 16 gage liner for encased cores, the sampler has a 1.375-in. (3.49-cm) inside diameter throughout. A 3-in. (7.62-cm) outside diameter by 2.5-in. (6.35-cm) inside diameter split-barrel sampler with a 2.375-in. (6.03-cm) inside diameter drive shoe is also available (22).[6] Other split-barrel samplers in the size range of 2.5-in. (6.35-cm) to 4.5-in. (11.43-cm) outside diameter are manufactured but are less common. A plastic or metal retainer basket, or a flap valve is often fitted into the drive shoe to prevent samples from falling out during retrieval.

9.4.4.2 *Sampling Method*—As described in Method D 1586 the sampler is threaded onto drilling rods and is lowered to the bottom of the boring. The sampler is then driven into the soil with blows from a drop hammer attached to the drill rig. The hammer usually weighs 140 lb and is operated by the driller. The sampler is extracted from the soil in a manner that will ensure maximum sample recovery. A

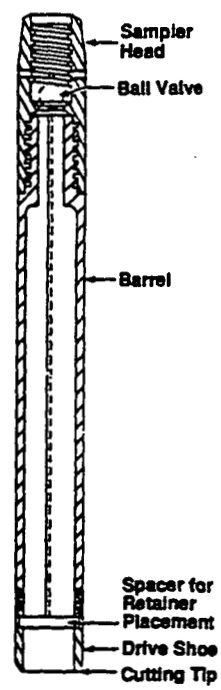

FIG. 16 Split-Barrel Drive Sampler

mple is obtained by disassembling the drive shoe and head, and splitting the barrel to expose the core of soil. Material disturbed by contact with the barrel can be scraped away, or a less disturbed interior portion collected with a spatula.

9.4.4.3 *Comments*—Split barrel drive samplers can be used in all soil types if the larger grain sizes can enter through the opening of the drive shoe. Because the sampler can be fitted with a retainer basket, it is typically used in place of thin-walled tubes when cohesionless soils are to be sampled.

9.4.5 *Ring-Lined Barrel Samplers:*

9.4.5.1 *Description*—As described in Practice D 3550, the ring-lined barrel sampler consists of a one piece barrel or two split-barrel halves, a drive shoe, rings, a waste barrel and a sampler head containing a ball check valve (see Fig. 17). The rings fit snugly inside the barrel and are designed to be directly inserted into geotechnical testing apparatus when removed from the barrel. Most samplers are designed to hold at least six rings. The waste barrel provides a space above the rings into which disturbed soil, originally at the bottom of the hole, can move. The samplers are commonly available with 2, 3, and 4-in. (5.08, 7.62, and 10.16-cm) outside diameter.

9.4.5.2 *Sampling Method*—The ring-lined barrel sampler can be driven or pushed into soil. It is important to insert the sampler deep enough to allow all disturbed soil to move through the rings and into the waste barrel. Once retrieved, the sampler is disassembled, and the sample filled rings are carefully removed. The rings are usually removed as one unit and placed into a capped container. Alternately, the individual soil filled rings can be capped with plastic or PTFE and even sealed with wax or adhesive tape (refer to Practice D 4220).

9.4.5.3 *Comments*—Because ring-lined barrel samplers are more rigid than thin-walled tubes, they can be driven into soils containing sands and gravels that might damage thin-walled tubes. The sampler provides samples in rings that can be handled without further disturbance of the soil. Because of this, these devices are most often used when geotechnical or chemical analyses are to be performed.

9.4.6 *Continuous Sample Tube System:*

9.4.6.1 *Description*—Continuous sample tube systems that fit within a hollow-stem auger column are readily available in North America. The barrel is typically 5 ft (1.52 m) long, and fits within the lead auger of the hollow auger column. The sampler is prevented from rotating as the auger column is turned (20). For many conditions the sampler provides continuous, 5-ft (1.52-m) samples (see Fig. 18). The assembly can be split- or solid-barrel and can be used with or without liners of various metallic and nonmetallic materials (20). Two clear, plastic, 30 in. (76.20 cm) long liners are often used. The sampler may also be fitted with a plastic or metal retainer basket, or a falp valve to prevent cohesionless soils from falling out of the sampler during retrieval (20).

9.4.6.2 *Sampling Method*—The sampler is locked in place inside the auger column with its open end protruding a short distance beyond the end of the column. While advancing the column, soil enters the non-rotating sampling barrel. After a 5-ft (1.52-m) advance, the sampler is withdrawn, and the liner (if used) is removed and capped.

9.4.6.3 *Comments*—The continuous sample tube system replaces the pilot head assembly in the hollow-stem auger column. Because of this, sampling speed is greatly increased since the pilot assembly does not have to be removed before taking a sample. The continuous sample tube system is best used in clays, silts, and in fine grained sands. It can be used to sample soils that are much more consolidated or harder than can be sampled with Shelby tubes.

9.4.7 *Piston Samplers:*

9.4.7.1 *Description*—Locally saturated (for example, perched ground water), or cohesionless soils, and very soft soils or sludges may not be retained in most samplers, even when they have been fitted with retainer baskets or flap valves. Piston samplers are often used under these conditions. The sampler consists of a sampling tube, an internal piston, and a drive head. The piston fits snugly inside the tube. The piston is attached to a rod assembly or a cable that leads to the surface. Tubes made of steel are available in 5.5 and 30-in. (13.97 and 76.20-cm) and 5-ft (1.5-m) lengths with 0.75, 2, 3, 4, and 5-in. (1.91, 5.08, 7.62, 10.16, and 12.70-cm) inside diameter (22, 23). When equipped with a hardened steel drive shoe, the tube can be fitted with a liner made of aluminum clear PVC, or another material (see Fig. 19) (24). A version of the sampler designed for peat sampling has a cone shaped piston (8).

9.4.7.2 *Sampling Method*—Prior to sampling, the piston is placed at the base (advancing end) of the tube. The sampler is then attached to drill rods and lowered down the borehole or hollow-stem auger column to the bottom of the hole (top of the sampling interval). The sampler is then pushed or driven into the sampling interval. As the tube

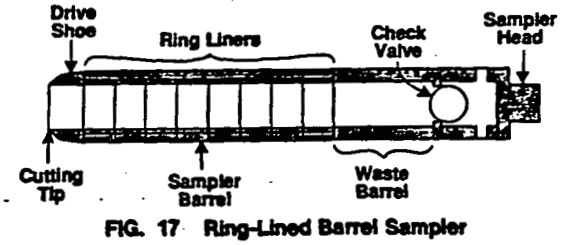

FIG. 17 Ring-Lined Barrel Sampler

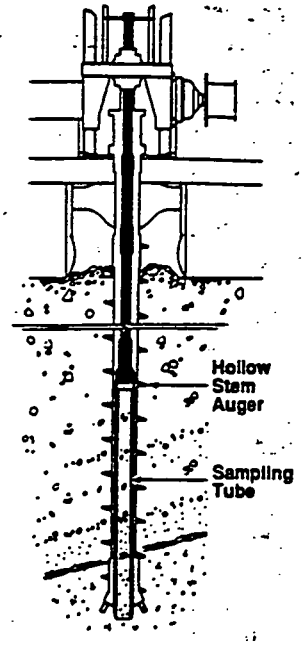

FIG. 18 Continuous Sample Tube System

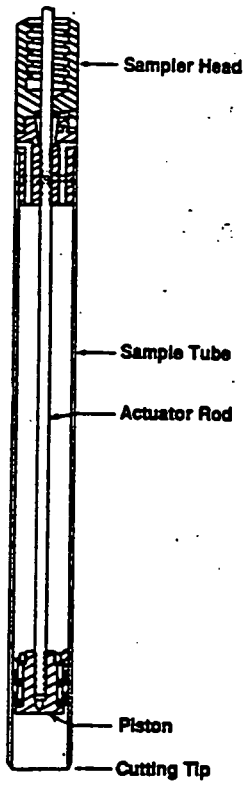

FIG. 19 Piston Sampler

moves downward, the piston remains stationary and in contact with the top of the soil sample. When the sampler is withdrawn, soil is retained because of suction that develops between the piston and the soil core within the sampler. This suction is stronger than the suction at the bottom of the sampler that would tend to extract soil from the sampler. Even so, it is often useful to twist the sampler with the drill rods prior to retrieval, to break suction at the bottom end and ensure that the sample will not be pulled out of the sampler.

9.4.7.3 *Comments*—Average recovery ratios greater than 0.9 can be attained with this sampling tool (24, 25). However, because the sampler depends on development of suction between the sample and the piston, it may not [illegible] in unsaturated, coarse grained sands and gravels. This [illegible] to the high air permeability of such material that prevents [illegible]

creation of suction with the sampler. Samples collected with piston samplers are relatively undisturbed. Zapico et al. (24) described techniques for extracting fluid samples directly from liners, and for converting liners into permeameters.

REFERENCES

(1) Soil Survey Staff, *Soil Survey Manual*, U.S. Dept. of Agriculture, Superintendent of Documents, Washington, D.C., 1951.

(2) Acker, W. L., *Basic Procedures for Soil Sampling and Core Drilling*, Acker Drill Co. Inc., Scranton, Pa, 1974.

(3) Materials Testing Division, *Catalog of Products*, Soiltest Inc., Evanston, Illinois, 1983.

(4) Bureau of Reclamation, *Earth Manual*, U.S. Dept. of the Interior, United States Government Printing Office, Washington, D.C., 1974.

(5) Sales Division, *Catalog of Products*, Soilmoisture Equipment Corp., Santa Barbara, California, 1988.

(6) Sales Division, *Catalog of Products*, Art's Manufacturing and Supply, American Falls, Idaho, 1988.

(7) Sales Division, *Catalog of Products*, Brainard Kilman, Stone Mountain, Georgia, 1988.

(8) Everett, L. G., and Wilson, L. G., *Permit Guidance Manual on Unsaturated Zone Monitoring For Hazardous Waste Land Treatment Units*, EPA/530-SW-86-040, 1986.

(9) Sales Division, *Catalog of Products*, VI-COR Technologies Inc., Bellevue, Washington, 1988.

(10) Sales Division, *J.M.C. Soil Investigation Equipment, Catalog No. 6*, Clements Associates Inc.

(11) Hvorslev, M. J., *Subsurface Exploration and Sampling of Soils for Civil Engineering Purposes*, U.S. Army Corp of Engineers, Waterways Experiment Station, Vicksburg, Mississippi, 1949.

(12) Wilson, J. T., and McNabb, J. F., "Biological Transformation of Organic Pollutants in Ground Water," *EOS-Transactions*, AGU, Vol 64, pp. 505–507.

(13) Brakensiek, D. L., Osborn, H. B., and Rawls, W. L., *Field Manual for Research in Agricultural Hydrology, Agriculture Handbook No. 224*, Science and Education Administration, United States Dept. of Agriculture, Washington, D.C., 1979 (revised), pp. 258–275.

(14) Sharma, P. K., and DeDalta, S. K., "A Core Sampler for Puddled Soils," *Soil Science Society of America Journal*, Vol 49, 1985, pp. 1069–1070.

(15) Sales Division, *Catalog of Products*, Little Beaver Inc., Livingston, Texas, 1988.

(16) Scalf, M. R., McNabb, J. F., Dunlap, W. J., Cosby, R. L., and Fryberger, J., *Manual of Groundwater Sampling Procedures*, National Water Well Association, Dublin, Ohio, 1981.

(17) Driscoll, F. G., *Groundwater and Wells*, Johnson Division, St. Paul, Minnesota, (2nd ed.), 1986.

(18) Sales Division, *Catalog of Products*, Mobile Drilling Co. Inc., Indianapolis, Indiana, 1988.

(19) Hackett, G., "Drilling and Constructing Monitoring Wells with Hollow-Stem Augers Part 1: Drilling Considerations," *Ground Water Monitoring Review*, NWWA, Fall 1987, pp. 51–62.

(20) Riggs, C. O., "Soil Sampling in the Vadose Zone," *Proceedings of the NWWA/U.S. EPA Conference on Characterization and Monitoring of the Vadose Zone*, NWWA, Las Vegas, Nevada, 1983, pp. 611–622.

(21) Sales Division, *Product Literature*, Pitcher Drilling Co., Palo Alto, California, 1986.

(22) Sales Division, *Catalog of Products*, Diedrich Drilling Equipment, LaPorte, Indiana, 1988.

(23) Sales Division, *Instrumentation for Soil and Rocks, Catalog of Products*, Solinst, Burlington, Ontario, Canada, 1988.

(24) Zapico, M. M., Vales, S., and Cherry, J. A., "A Wireline Core Barrel for Sampling Cohesionless Sand and Gravel Below the Water Table," *Ground Water Monitoring Review*, NWWA, Spring 1987, pp. 75–82.

(25) Shuter, E., Teasdale, W. E., "Application of Drilling, Coring, and Sampling Techniques to Test Holes and Wells," *U.S. Geol. Survey Techniques of Water Resource Investigations*, Book 2, Chapter F-1, 1989.

Standard Test Method for Consolidated-Undrained Triaxial Compression Test on Cohesive Soils[1]

This standard is issued under the fixed designation D 4767; the number immediately following the designation indicates the year of original adoption or, in the case of revision, the year of last revision. A number in parentheses indicates the year of last reapproval. A superscript epsilon (ε) indicates an editorial change since the last revision or reapproval.

[ε1] NOTE—Section 13 was added editorially January 1991.

1. Scope

1.1 This test method covers the determination of strength and stress-strain relationships for a cylindrical specimen of either an undisturbed or remolded saturated cohesive soil when it is isotropically consolidated and sheared undrained in compression at a constant rate of axial deformation (strain controlled).

1.2 The test method provides for the calculation of total and effective stresses on, and axial compression of the test specimen by measurement of axial load, axial deformation, and pore-water pressure.

1.3 The test provides data useful in determining strength and deformation properties of cohesive soils such as Mohr strength envelopes and Young's modulus. Generally, three specimens are tested at different effective consolidation stresses to define a strength envelope.

1.4 The determination of strength envelopes and the development of relationships to aid in interpreting and evaluating test results are left to the engineer or office requesting the test.

1.5 The values stated in either SI or non-SI units shall be regarded separately as standard. The values in each system may not be exact equivalents, therefore, each system must be used independently of the other, without combining values in any way.

1.6 *This standard may involve hazardous materials, operations, and equipment. This standard does not purport to address all of the safety problems associated with its use. It is the responsibility of the user of this standard to establish appropriate safety and health practices and determine the applicability of regulatory limitations prior to use.*

2. Referenced Documents

2.1 *ASTM Standards:*

D 422 Method for Particle-Size Analysis of Soils[2]

D 653 Terminology Relating to Soil, Rock, and Contained Fluids[2]

D 854 Test Method for Specific Gravity of Soils[2]

D 1587 Practice for Thin-Walled Tube Sampling of Soils[2]

D 2166 Test Method for Unconfined Compressive Strength of Cohesive Soil[2]

D 2216 Method for Laboratory Determination of Water Content of Soil, Rock, and Soil-Aggregate Mixtures[2]

D 2435 Test Method for One-Dimensional Consolidation Properties of Soils[2]

D 2487 Test Method for Classification of Soils for Engineering Purposes[2]

D 2850 Test Method for Unconsolidated, Undrained Compressive Strength of Cohesive Soils in Triaxial Compression[2]

D 4220 Practices for Preserving and Transporting Soil Samples[2]

D 4318 Test Method for Liquid Limit, Plastic Limit, and Plasticity Index of Soils[2]

3. Terminology

3.1 *Definitions*—The definitions of terms used in [illegible] method shall be in accordance with Terminology D 6[illegible]

3.2 *Description of Terms Specific to this Standard:*

3.2.1 *back pressure*—a pressure applied to the specimen pore-water to cause air in the pore space to pass into solution in the pore-water, that is, to saturate the specimen.

3.2.2 *effective consolidation stress*—the difference between the cell pressure and the pore-water pressure prior to shearing the specimen.

3.2.3 *failure*—the stress condition at failure for a test specimen. Failure is often taken to correspond to the maximum principal stress difference (maximum deviator stress) attained or the principal stress difference (deviator stress) at 15 % axial strain, whichever is obtained first during the performance of a test. Depending on soil behavior and field application, other suitable failure criteria may be defined, such as maximum effective stress obliquity, σ'_1/σ'_3, or the principal stress difference (deviator stress) at a selected axial strain other than 15 %.

4. Significance and Use

4.1 The shear strength of a saturated soil in triaxial compression depends on the stresses applied, time of consolidation, strain rate, and the stress history experienced by the soil.

4.2 The strength in this test is measured under undrained conditions and is applicable to field conditions where [illegible] that have been fully consolidated under one set of stres[illegible] subjected to a change in stress without time for fu[illegible] consolidation to take place (undrained condition), and the field stress conditions are similar to those in the test.

[1] This test method is under the jurisdiction of ASTM Committee D-18 on Soil and Rock and is the direct responsibility of Subcommittee D18.05 on Structural Properties of Soils.

Current edition approved May 3, 1988. Published July 1988.

[2] *Annual Book of ASTM Standards*, Vol 04.08.

NOTE 1—If the strength is required for the case where the soil is not consolidated during testing prior to shear, refer to Test Method D 2850 or Test Method D 2166.

4.3 Using the pore-water pressure measured during the test, the shear strength determined from this test can be expressed in terms of effective stress. This shear strength may be applied to field conditions where full drainage can occur (drained conditions) or where pore pressures induced by loading can be estimated, and the field stress conditions are similar to those in the test.

4.4 The shear strength determined from the test expressed in terms of total stresses (undrained conditions) or effective stresses (drained conditions) is commonly used in embankment stability analyses, earth pressure calculations, and foundation design.

5. Apparatus

5.1 A schematic diagram of a triaxial compression apparatus suitable for the performance of consolidated-undrained tests is shown in Fig. 1. The requirements for equipment needed to perform satisfactory tests are given in the following sections.

5.2 *Axial Loading Device*—The axial compression device may be a screw jack driven by an electric motor through a geared transmission, a hydraulic or pneumatic loading device, or any other compression device with sufficient capacity and control to provide the rate of axial strain (loading) described in 8.4.2. The rate of advance of the loading device should not deviate by more than ±1 % from the selected value. Vibration due to the operation of the loading device shall be sufficiently small to not cause dimensional changes in the specimen or to produce changes in pore-water pressure when the drainage valves are closed.

NOTE 2—A loading device may be judged to produce sufficiently small vibrations if there are no visible ripples in a glass of water placed on the loading platform when the device is operating.

5.3 *Axial Load-Measuring Device*—The axial load-measuring device may be a load ring, electronic load cell, hydraulic load cell, or any other load-measuring device capable of the accuracy prescribed in this paragraph and may be a part of the axial loading device. The axial load-measuring device shall be capable of measuring the axial load to an accuracy of within ±1 % of the axial load at failure. If the load-measuring device is located inside the triaxial compression chamber, it shall be insensitive to horizontal forces and to the magnitude of the chamber pressure.

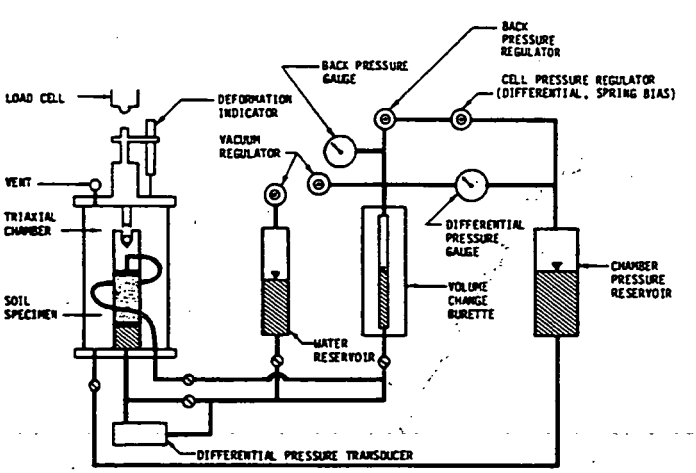

FIG. 1 Schematic Diagram of a Typical Consolidated Undrained Triaxial Apparatus

5.4 *Triaxial Compression Chamber*—The triaxial chamber must be able to withstand a chamber pressure equal to the sum of the effective consolidation stress and the back pressure. It shall consist of a top plate and a baseplate separated by a cylinder. The cylinder may be constructed of any material capable of withstanding the applied pressures. It is desirable to use a transparent material or have a cylinder provided with viewing ports so the behavior of the specimen may be observed. The top plate shall have a vent valve such that air can be forced out of the chamber as it is filled. The baseplate shall have an inlet through which the pressure liquid is supplied to the chamber, and inlets leading to the specimen base and provide for connection to the cap to allow saturation and drainage of the specimen when required.

5.5 *Axial Load Piston*—The piston passing through the top of the chamber and its seal must be designed so the variation in axial load due to friction does not exceed 0.1 % of the axial load at failure and so there is negligible lateral bending of the piston during loading.

NOTE 3—The use of two linear ball bushings to guide the piston is recommended to minimize friction and maintain alignment.

NOTE 4—A minimum piston diameter of ⅙ the specimen diameter has been used successfully in many laboratories to minimize lateral bending.

5.6 *Pressure- and Vacuum-Control Devices*—The chamber pressure and back pressure control devices shall be capable of applying and controlling pressures to within ±0.25 psi (2 kPa) for effective consolidation pressures less than 28 psi (200 kPa) and to within ±1 % for effective consolidation pressures greater than 28 psi (200 kPa). The vacuum control device shall be capable of applying and controlling partial vacuums to within ±0.25 psi (2 kPa). The devices may consist of self-compensating mercury pots, pneumatic pressure regulators, combination pneumatic pressure and vacuum regulators, or any other device capable of applying and controlling pressures or partial vacuums to the required tolerances.

5.7 *Pressure- and Vacuum-Measurement Devices*—The chamber pressure, back pressure, and vacuum measuring devices shall be capable of measuring pressures or partial vacuums to the tolerances given in 5.6. They may consist of Bourdon gages, pressure manometers, electronic pressure transducers, or any other device capable of measuring pressures, or partial vacuums to the stated tolerances. If separate devices are used to measure the chamber pressure and back pressure, the devices must be calibrated simultaneously and against the same pressure source. Since the chamber and back pressure are the pressures taken at the midheight of the specimen, it may be necessary to adjust the calibration of the devices to reflect the hydraulic head of fluids in the chamber and back pressure control systems (Fig. 1).

5.8 *Pore-Water Pressure Measurement Device*—The specimen pore-water pressure shall also be measured to the tolerances given in 5.6. During undrained shear, the pore-

water pressure shall be measured in such a manner that as little water as possible is allowed to go into or out of the specimen. To achieve this requirement, a very stiff electronic pressure transducer or null-indicating device must be used. With an electronic pressure transducer the pore-water pressure is read directly. With a null-indicating device a pressure control is continuously adjusted to maintain a constant level of the water/mercury interface in the capillary bore of the device. The pressure required to prevent movement of the water is equal to the pore-water pressure. Both measuring devices shall have a rigidity of all the assembled parts of the pore-water pressure measurement system relative to the total volume of the specimen, satisfying the following requirement:

$$\frac{(\Delta V/V)}{\Delta u} < 2.2 \times 10^{-5}\ \text{in.}^2/\text{lb}\ (3.2 \times 10^{-6}\ \text{m}^2/\text{kN}) \qquad (1)$$

where:

ΔV = change in volume of the pore-water measurement system due to a pore pressure change, in.^{3} (mm^3),
V = the total volume of the specimen, in.^{3} (mm^3), and
Δu = the change in pore pressure, psi (kPa).

NOTE 5—To meet the rigidity requirement, tubing between the specimen and the measuring device should be short and thick walled with small bores. Thermoplastic, copper, and stainless steel tubing have been used successfully in many laboratories.

5.9 *Volume Change Measurement Device*—The volume of water entering or leaving the specimen shall be measured with an accuracy of within ±0.05 % of the total volume of the specimen. The volume measuring device is usually a burette but may be any other device meeting the accuracy requirement. The device must be able to withstand the maximum chamber pressure.

5.10 *Deformation Indicator*—The vertical deformation of the specimen is usually determined from the travel of the piston acting on the top of the specimen. The piston travel shall be measured with an accuracy of at least ±0.02 % of the initial specimen height. The deformation indicator shall have a travel range of at least 20 % of the initial height of the specimen and may be a dial indicator, linear variable differential transformer (LVDT), extensiometer, or other measuring device meeting the requirements for accuracy and range.

5.11 *Specimen Cap and Base*—The specimen cap and base shall be designed to provide drainage from both ends of the specimen. They shall be constructed of a rigid, noncorrosive, impermeable material, and each shall, except for the drainage provision, have a circular plane surface of contact with the porous discs and a circular cross section. The weight of the specimen cap and top porous disc shall be less than 0.5 % of the applied axial load at failure or less than 0.1 lb (50 g). The diameter of the cap and base shall be equal to the initial diameter of the specimen. The specimen base shall be connected to the triaxial compression chamber to prevent lateral motion or tilting, and the specimen cap shall be designed such that eccentricity of the piston-to-cap contact relative to the vertical axis of the specimen does not exceed 0.05 in. (1.3 mm). The end of the piston and specimen cap contact area shall be designed so that tilting of the specimen cap during the test is minimal. The cylindrical surface of the specimen base and cap that contacts the membrane to form a seal shall be smooth and free of scratches.

5.12 *Porous Discs*—The specimen shall be separated from the specimen cap and base by rigid porous discs of a diameter equal to that of the specimen. The coefficient of permeability of the discs shall be approximately equal to that of fine sand (4×10^{-5} in./s (1×10^{-4} cm/s)). The discs shall be regularly checked to determine whether they have become clogged.

NOTE 6—Filter-paper discs of a diameter equal to that of the specimen may be placed between the porous discs and specimen to avoid clogging of the porous discs when accurate moduli values are not required.

5.13 *Filter-Paper Strips and Discs*—Filter-paper strips are used by many laboratories to decrease the time required for testing. If filter strips and discs are used, they shall be of a type that does not dissolve in water. The coefficient of permeability of the filter paper shall not be less than 4×10^{-6} in./s (1×10^{-5} cm/s) for a normal pressure of 80 psi (550 kPa). To avoid hoop tension, filter strips should cover no more than 50 % of the specimen periphery. Filter-strip cages similar to that shown in Fig. 2 have been successfully used by many laboratories. An equation for correcting the principal stress difference (deviator stress) for the effect of the strength of vertical filter strips is given in 10.6.

NOTE 7—Whatman's No. 54 Filter Paper has been found to meet the permeability and durability requirements.

5.14 *Rubber Membrane*—The rubber membrane used to encase the specimen shall provide reliable protection against leakage. To check a membrane for leakage, the membrane shall be placed around a cylindrical form, sealed at both ends with rubber O-rings, subjected to a small air pressure on the inside, and immersed in water. If air bubbles appear from any point on the membrane it shall be rejected. To offer minimum restraint to the specimen, the unstretched membrane diameter shall be between 90 and 95 % of that of the specimen. The membrane thickness shall not exceed 1 % of the diameter of the specimen. The membrane shall be sealed

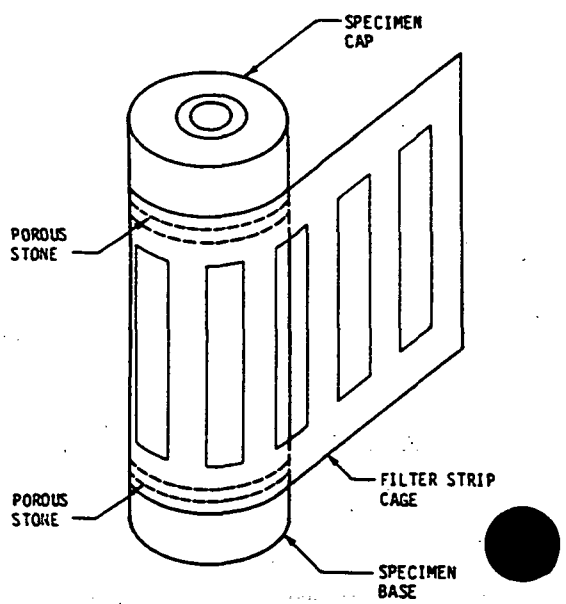

FIG. 2 Filter Strip Cage

to the specimen cap and base with rubber O-rings for which the unstressed inside diameter is between 75 and 85 % of the diameter of the cap and base, or by other means that will provide a positive seal. An equation for correcting the principal stress difference (deviator stress) for the effect of the stiffness of the membrane is given in 10.7.

5.15 *Valves*—Changes in volume due to opening and closing valves may result in inaccurate volume change and pore-water pressure measurements. For this reason, valves in the specimen drainage system shall be of the type that produce minimum volume changes due to their operation. A valve may be assumed to produce minimum volume change if opening or closing the valve in a closed, saturated pore-water pressure system does not induce a pressure change of greater than ±0.1 psi (0.7 kPa). All valves must be capable of withstanding applied pressures without leakage.

NOTE 8—Ball valves have been found to provide minimum volume-change characteristics; however, any other type of valve having suitable volume-change characteristics may be used.

5.16 *Specimen-Size Measurement Devices*—Devices used to determine the height and diameter of the specimen shall measure the respective dimensions to within ±0.1 % of the total dimension and shall be constructed such that their use will not disturb the specimen.

NOTE 9—Circumferential measuring tapes are recommended over calipers for measuring the diameter.

5.17 *Recorders*—Specimen behavior may be recorded manually or by electronic digital or analog recorders. If electronic recorders are used, it shall be necessary to calibrate the measuring devices through the recorder using known input standards.

5.18 *Sample Extruder*—The sample extruder shall be capable of extruding the soil core from the sampling tube at a uniform rate in the same direction of travel as the sample entered the tube and with minimum disturbance of the sample. If the soil core is not extruded vertically, care should be taken to avoid bending stresses on the core due to gravity. Conditions at the time of sample removal may dictate the direction of removal, but the principal concern is to minimize the degree of disturbance.

5.19 *Timer*—A timing device indicating the elapsed testing time to the nearest 1 s shall be used to obtain consolidation data (8.3.3).

5.20 *Weighing Device*—The specimen weighing device shall determine the mass of the specimen to an accuracy of within ±0.05 % of the total mass of the specimen.

5.21 *Water Deaeration Device*—The amount of dissolved gas (air) in the water used to saturate the specimen may be decreased by boiling, by heating and spraying into a vacuum, or by any other method that will satisfy the requirement for saturating the specimen within the limits imposed by the available maximum back pressure and time to perform the test.

5.22 *Testing Environment*—The consolidation and shear portion of the test shall be performed in an environment where temperature fluctuations are less than ±7.2°F (±4°C) and there is no direct contact with sunlight.

5.23 *Miscellaneous Apparatus*—Specimen trimming and cutting tools including a wire saw, steel straightedge, miter box and vertical trimming lathe, apparatus for preparing compacted specimens, membrane and O-ring expander, water content cans, and data sheets shall be provided as required.

6. Test Specimen Preparation

6.1 *Specimen Size*—Specimens shall be cylindrical and have a minimum diameter of 1.3 in. (3.3 cm). The height-to-diameter ratio shall be between 2 and 2.5. The largest particle size shall be smaller than ⅙ the specimen diameter. If, after completion of a test, it is found based on visual observation that oversize particles are present, indicate this information in the report of test data (11.1.22).

NOTE 10—If oversize particles are found in the specimen after testing, a particle-size analysis may be performed in accordance with Method D 422 to confirm the visual observation and the results provided with the test report (11.1.4).

6.2 *Undisturbed Specimens*—Prepare undisturbed specimens from large undisturbed samples or from samples secured in accordance with Practice D 1587 or other acceptable undisturbed tube sampling procedures and preserved and transported in accordance with the practices for Group C samples in Practices D 4220. Specimens obtained by tube sampling may be tested without trimming except for cutting the end surfaces plane and perpendicular to the longitudinal axis of the specimen, provided soil characteristics are such that no significant disturbance results from sampling. Handle specimens carefully to minimize disturbance, changes in cross section, or change in water content. If compression or any type of noticeable disturbance would be caused by the extrusion device, split the sample tube lengthwise or cut the tube in suitable sections to facilitate removal of the specimen with minimum disturbance. Prepare trimmed specimens, in an environment such as a controlled high-humidity room where soil water content change is minimized. Where removal of pebbles or crumbling resulting from trimming causes voids on the surface of the specimen, carefully fill the voids with remolded soil obtained from the trimmings. Where the sample condition permits a vertical trimming lathe that will accommodate the total sample may be used as an aid in preparing the specimen to the required diameter. After obtaining the desired diameter, place the specimen in a miter box and cut the specimen to the final length with a wire saw or other suitable device. Trim the surfaces with the steel straightedge. Perform one or more water content determinations on material trimmed from the specimen in accordance with Method D 2216. Determine the mass and dimensions of the specimen using the devices described in 5.16 and 5.20. A minimum of three height measurements (120° apart) and at least three diameter measurements at the quarter points of the height shall be made to determine the average height and diameter of the specimen.

6.3 *Compacted Specimens*—Compacted specimens may be prepared by compacting material in at least six layers using a pressing or kneading action into a split mold of circular cross section having dimensions meeting the requirements enumerated in 6.1. Material required for the specimen shall be batched by thoroughly mixing soil with sufficient water to produce the desired water content. After batching, store the material in a covered container for at least 16 h prior to compaction. Specimens may be compacted to the

desired density by either: (*1*) kneading or tamping each layer until the accumulative mass of the soil placed in the mold is compacted to a known volume; or (*2*) by adjusting the number of layers, the number of tamps per layer, and the force per tamp. The top of each layer shall be scarified prior to the addition of material for the next layer. The tamper used to compact the material shall have diameter equal to or less than ½ the diameter of the mold. After a specimen is formed, with the ends perpendicular to the longitudinal axis, remove the mold and determine the mass and dimensions of the specimen using the devices described in 5.16 and 5.20. Perform one or more water content determinations on excess material used to prepare the specimen in accordance with Method D 2216.

NOTE 11—It is common for the unit weight of the specimen after removal from the mold to be less than the value based on the volume of the mold. This occurs as a result of the specimen swelling after removal of the lateral confinement due to the mold.

7. Mounting Specimen

7.1 *Preparations*—Before mounting the specimen in the triaxial chamber, make the following preparations:

7.1.1 If deemed necessary, check the rubber membrane for leaks (see 5.14).

7.1.2 Place the membrane on the membrane expander or, if it is to be rolled onto the specimen, roll the membrane on the cap or base.

7.1.3 Check that the porous discs and specimen drainage tubes are not obstructed by passing air or water through the appropriate lines.

7.1.4 Attach the pressure-control and volume-measurement system, and a pore-pressure measurement device to the chamber base.

7.2 Depending on whether the saturation portion of the test will be initiated with either a wet or dry drainage system, mount the specimen using the appropriate method, as follows in either 7.2.1 or 7.2.2:

NOTE 12—It is recommended that the dry mounting method be used for specimens of soils that swell appreciably when in contact with water. If the wet mounting method is used for such soils, it will be necessary to obtain the specimen dimensions after the specimen has been mounted. In such cases, it will be necessary to determine the double thickness of the membrane, the double thickness of the wet filter paper strips (if used), and the combined height of the cap, base, and porous discs (including the thickness of filter discs if they are used) so that the appropriate values may be subtracted from the measurements.

7.2.1 *Wet Mounting Method:*

7.2.1.1 Fill the specimen drainage lines and the pore-water pressure measurement device with deaired water.

7.2.1.2 Saturate the porous discs by boiling them in water for at least 10 min and allow to cool to room temperature.

7.2.1.3 Place a saturated porous disc on the specimen base and after wiping away all free water on the disc, place the specimen on the disc. Next, place another porous disc and the specimen cap on top of the specimen. Check that the specimen cap, specimen, and porous discs are centered on the specimen base.

NOTE 13—If filter-paper discs are to be placed between the porous discs and specimen, they should be dipped in water prior to placement.

7.2.1.4 If filter-paper strips or a filter-paper cage (Fig. 2) are to be used, saturate the paper with water prior to placing it on the specimen. To avoid hoop tension, do not cover more than 50 % of the specimen periphery with [illegible]al strips of filter paper.

7.2.1.5 Proceed with Section 7.3.

7.2.2 *Dry Mounting Method:*

7.2.2.1 Dry the specimen drainage system. This may be accomplished by allowing dry air to flow through the system prior to mounting the specimen.

7.2.2.2 Dry the porous discs in the oven overnight prior to mounting the specimen and place in a desiccator while allowing the discs to cool to room temperature.

7.2.2.3 Place a dry porous disc on the specimen base and place the specimen on the disc. Next, place a dry porous disc and the specimen cap on the specimen. Check that the specimen cap, porous discs, and specimen are centered on the specimen base.

NOTE 14—If desired, dry filter-paper discs may be placed between the porous discs and specimen.

7.2.2.4 If filter-paper strips or a filter-paper cage (Fig. 2) are to be used, the cage or strips may be held in place by small pieces of tape at the top and bottom.

7.3 Place the rubber membrane around the specimen and seal it at the cap and base with two rubber O-rings or other positive seal at each end. A thin coating of silicon grease on the vertical surfaces of the cap and base will aid in sealing the membrane. If filter-paper strips or a filter-paper cage are used, do not apply grease to surfaces in contact with the filter-paper.

7.4 Attach the top drainage line and check the alignment of the specimen and the specimen cap. If the dry m[illegible]g method has been used, apply a partial vacuum of a[illegible]mately 5 psi (35 kPa) (not to exceed the consolidation [illegible]s) to the specimen through the top drainage line prior to checking the alignment. If there is any eccentricity, release the partial vacuum, realign the specimen and cap, and then reapply the partial vacuum. If the wet mounting method has been used, the alignment of the specimen and the specimen cap may be checked and adjusted without the use of a partial vacuum.

8. Procedure

8.1 *Prior to Saturation*—After assembling the triaxial chamber, perform the following operations:

8.1.1 Bring the axial load piston into contact with the specimen cap several times to permit proper seating and alignment of the piston with the cap. During this procedure, take care not to apply an axial load to the specimen exceeding 0.5 % of the estimated axial load at failure. When the piston is brought into contact, record the reading of the deformation indicator.

8.1.2 Fill the chamber with the chamber liquid, being careful to avoid trapping air or leaving an air space in the chamber.

8.2 *Saturation*—The objective of the saturation phase of the test is to fill all voids in the specimen with water without undesirable prestressing of the specimen or allowing the specimen to swell. Saturation is usually accomplish[illegible] by applying back pressure to the specimen pore water [illegible]e air into solution after either: (*1*) applying vacuum [illegible]e specimen and dry drainage system (lines, porous discs, pore-pressure device, filter-strips or cage, and discs) and

allowing deaired water to saturate the system while maintaining the vacuum; or (*2*) saturating the drainage system by boiling the porous discs in water and allowing water to flow through the system prior to mounting the specimen. It should be noted that time is required to place air into solution. Accordingly, removing as much air as possible prior to applying back pressure will decrease the amount of air that will have to be placed into solution and will also decrease the back pressure required for saturation. In addition, air remaining in the specimen and drainage system just prior to applying back pressure will go into solution much more readily if deaired water is used for saturation. The use of deaired water will also decrease the time and back pressure required for saturation. Many procedures have been developed to accomplish saturation. The following are suggested procedures:

8.2.1 *Starting with Initially Dry Drainage System*—Increase the partial vacuum acting on top of the specimen to the maximum available vacuum. If the effective consolidation stress under which the strength is to be determined is less than the maximum partial vacuum, apply a lower partial vacuum to the chamber. The difference between the partial vacuum applied to the specimen and the chamber should never exceed the effective consolidation stress for the test and should not be less than 5 psi (35 kPa) to allow for flow through the sample. After approximately 2 h, allow deaired water to percolate from the bottom to the top of the specimen under a differential vacuum of less than 3 psi (20 kPa) (Note 15).

8.2.1.1 There should always be a positive effective stress of at least 2 psi (13 kPa) at the bottom of the specimen during this part of the procedure. When water appears in the burette connected to the top of the specimen, close the valve to the bottom of the specimen and fill the burette with deaired water. Next, reduce the vacuum acting on top of the specimen through the burette to atmospheric pressure while simultaneously increasing the chamber pressure by an equal amount. During this process, the difference between the pore pressure measured at the bottom of the specimen and the chamber pressure should not be allowed to exceed the desired effective consolidation pressure. When the pore pressure at the bottom of the specimen stabilizes, proceed with back pressuring of the specimen pore-water as described in 8.2.3. To check for equalization, close the drainage valves to the specimen and measure the pore pressure change over a 1-min interval. If the change is less than 1 % of the chamber pressure, the pore pressure may be assumed to be stabilized.

NOTE 15—For saturated clays, percolation may not be necessary and water can be added simultaneously at both top and bottom.

8.2.2 *Starting with Initially Saturated Drainage System*—After filling the burette connected to the top of the specimen with deaired water, apply a chamber pressure of 5 psi (35 kPa) or less and open the specimen drainage valves. When the pore pressure at the bottom of the specimen stabilizes, according to the method described in 8.2.1, or when the burette reading stabilizes, back pressuring of the specimen pore-water may be initiated.

8.2.3 *Applying Back Pressure*—Simultaneously increase the chamber and back pressure in steps with specimen drainage valves opened so that deaired water from the burette connected to the top and bottom of the specimen may flow into the specimen. To avoid undesirable prestressing of the specimen while applying back pressure, the pressures must be applied incrementally with adequate time between increments to permit equalization of pore-water pressure throughout the specimen. The size of each increment might be 5 psi (35 kPa), 10 psi (70 kPa), or even 20 psi (140 kPa), depending on the compressibility of the soil specimen, the magnitude of the desired effective consolidation stress, and the degree of saturation of the specimen just prior to the addition of the increment. The difference between the chamber pressure and the back pressure during back pressuring should not exceed 5 psi (35 kPa) unless it is deemed necessary to control swelling of the specimen during the procedure. The difference between the chamber and back pressure must also remain within ±5 % when the pressures are raised and within ±2 % when the pressures are constant. To check for equalization after application of a back pressure increment or after the full value of back pressure has been applied, close the specimen drainage valves and measure the change in pore-pressure over a 1-min interval. If the change in pore pressure is less than 1 % of the difference between the chamber pressure and the back pressure, another back pressure increment may be added or a measurement may be taken of the pore pressure parameter B (see 8.2.4) to determine if saturation is completed. Specimens shall be considered to be saturated if the value of B is equal to or greater than 0.95, or if B remains unchanged with addition of back pressure increments.

NOTE 16—Although the pore pressure parameter B is used to measure the degree of saturation, the B-value is also a function of soil stiffness. If the degree of saturation of the sample is 100 %, the B-value measurement will increase with decreasing soil stiffness. Therefore, when testing soft soil samples, a B-value of 95 % may indicate a degree of saturation less than 100 %.

NOTE 17—The back pressure required to saturate a compacted specimen may be higher for the wet mounting method than for the dry mounting method and may be as high as 200 psi (1400 kPa).

NOTE 18—Many laboratories use differential pressure regulators and transducers to achieve the requirements for small differences between chamber and back pressure.

8.2.4 *Measurement of the Pore Pressure Parameter B*—Determine the value of the pore pressure parameter B in accordance with 8.2.4.1 through 8.2.4.4. The pore pressure parameter B is defined by the following equation:

$$B = \Delta u / \Delta \sigma_3 \quad (2)$$

where:

Δu = the change in the specimen pore pressure that occurs as a result of a change in the chamber pressure when the specimen drainage valves are closed, and

$\Delta \sigma_3$ = the change in the chamber pressure.

8.2.4.1 Close the specimen drainage valves and increase the chamber pressure 10 psi (70 kPa).

8.2.4.2 After approximately 2 min, determine and record the maximum value of the induced pore pressure. For many specimens, the pore pressure may decrease after the immediate response and then increase slightly with time. If this occurs, values of Δu should be plotted with time and the asymptotic pore pressure used as the change in pore pressure. A large increase in Δu with time or values of Δu greater than $\Delta \sigma_3$ indicate a leak of chamber fluid into the specimen. Decreasing values of Δu with time may indicate a leak in that

part of the pore pressure measurement system located outside of the chamber.

8.2.4.3 Calculate the B-value using Eq 2.

8.2.4.4 Reapply the same effective consolidation stress as existed prior to the B-value by reducing the chamber pressure by 10 psi (70 kPa) or by alternatively, increasing the back pressure by 10 psi (70 kPa). If B is continuing to increase with increasing back pressure, continue with back pressure saturation. If B is equal to or greater than 0.95 or if a plot of B versus back pressure indicates no further increase in B with increasing back pressure, initiate consolidation.

8.3 *Consolidation*—The objective of the consolidation phase of the test is to allow the specimen to reach equilibrium in a drained state under the effective consolidation stress for which a strength determination is required. During consolidation, data is obtained for use in determining when consolidation is complete and for computing a rate of strain to be used for the shear portion of the test. The consolidation procedure is as follows:

8.3.1 When the saturation phase of the test is completed, bring the axial load piston into contact with the specimen cap and record the reading on the deformation indicator. During this procedure, take care not to apply an axial load to the specimen exceeding 0.5 % of the estimated axial load at failure. After recording the reading, raise the piston a small distance above the specimen cap and lock the piston in place.

8.3.2 With the specimen drainage valves closed, hold the maximum back pressure constant and increase the chamber pressure until the difference between the chamber pressure and the back pressure equals the desired effective consolidation pressure.

NOTE 19—In certain circumstances, consolidation in stages may be desirable, especially when radial drainage is used.

8.3.3 Obtain an initial burette reading and then open appropriate drainage valves so that the specimen may drain from both ends into the burette. At increasing intervals of elapsed time (0.1, 0.2, 0.5, 1, 2, 4, 8, 15, and 30 min and at 1, 2, 4, and 8 h, etc.) observe and record the burette readings and after the 15-min reading record the accompanying deformation indicator readings obtained by carefully coupling the piston with the specimen cap. If burette and deformation indicator readings are to be plotted against the square root of time, the time intervals at which readings are taken may be adjusted to those that have easily obtained square roots, for example, 0.09, 0.25, 0.49, 1, 4, 9 min, etc. Depending on soil type, time intervals may be changed to convenient time intervals which allow for adequate definition of volume change versus time.

NOTE 20—In cases where significant amounts of fines may be washed from the specimen because of high initial hydraulic gradients, it is permissible to gradually increase the chamber pressure to the total desired pressure over a period of up to 10 min with the drainage valves open. If this is done, recording of data should begin immediately after the total pressure is reached.

8.3.4 Plot the burette and deformation indicator readings versus either the logarithm or square root of elapsed time. Allow consolidation to continue for at least one log cycle of time or one overnight period after 100 % primary consolidation has been achieved as determined in accordance with one of the procedures outlined in Test Method D 2435. A marked deviation between the slopes of the burette and deformation indicator curves toward the end of consolidation based on deformation indicator readings i[illegible]es leakage of fluid from the chamber into the specimen[illegible]e test should be terminated.

8.3.5 Determine the time for 50 % primary consolidation, t_{50}, in accordance with one of the procedures outlined in Test Method D 2435.

8.4 *Shear*—During shear, the chamber pressure shall be kept constant while advancing the axial load piston downward against the specimen cap using controlled axial strain as the loading criterion. Specimen drainage is not permitted during shear.

8.4.1 *Prior to Axial Loading*—Before initiating shear, perform the following steps:

8.4.1.1 By opening or closing the appropriate valves, isolate the specimen so that during shear the specimen pore-water pressure will be measured by the pore-pressure measurement device and no drainage will occur.

8.4.1.2 Place the chamber in position in the axial loading device. Be careful to align the axial loading device, the axial load-measuring device, and the triaxial chamber to prevent the application of a lateral force to the piston during shear.

8.4.1.3 Bring the axial load piston into contact with the specimen cap to permit proper seating and realignment of the piston with the cap. Remember that during this procedure, care should be taken not to apply an axial load to the specimen exceeding 0.5 % of the estimated axial load at failure. If the axial load-measuring device is located outside of the triaxial chamber, the chamber pressure will produce an upward force on the piston that will react against [illegible]al loading device. In this case, start shear with th[illegible]n slightly above the specimen cap, and before the pistol[illegible]es into contact with the specimen cap, either (*1*) measure and record the initial piston friction and upward thrust of the piston produced by the chamber pressure and later correct the measured axial load, or (*2*) adjust the axial load-measuring device to compensate for the friction and thrust. The variation in the axial load-measuring device reading should not exceed 0.1 % of the estimated failure load when the piston is moving downward prior to contacting the specimen cap. If the axial load-measuring device is located inside the chamber, it will not be necessary to correct or compensate for the uplift force acting on the axial loading device or for piston friction. However, if an internal load-measuring device of significant flexibility is used in combination with an external deformation indicator, correction of the deformation readings may be necessary. In both cases, record the initial reading on the pore-water pressure measurement device immediately prior to when the piston contacts the specimen cap and the reading on the deformation indicator when the piston contacts the specimen cap.

8.4.2 *Axial Loading*—Apply axial load to the specimen using a rate of axial strain that will produce approximate equalization of pore pressures throughout the specimen at failure. Assuming failure will occur after 4 %, a suitable rate of strain may be obtained by dividing 4 % by ten times the value of t_{50} (obtained in 8.3.5). This rate of st[illegible]vill provide for determination of accurate effective stres[illegible] in the range necessary to define effective strength envelo[illegible]s. If, however, it is estimated that failure will occur at a strain value lower than 4 %, it will be necessary to obtain a suitable

strain rate by dividing the estimated failure strain by ten times the value of t_{50}. At a minimum, record load, deformation, and pore-water pressure values at increments of 0.1 % to 1 % strain and, thereafter, at every 1 %. Take sufficient readings to define the stress-strain curve; hence, more frequent readings may be required in the early stages of the test and as failure is approached. Continue the loading to 15 % strain, except loading may be stopped when the principal stress difference (deviator stress) has dropped 20 % or when 5 % additional axial strain occurs after a peak in principal stress difference (deviator stress).

NOTE 21—The use of a manually adjusted null-indicating device will require nearly continuous attention to ensure the criterion for undrained shear.

9. Removing Specimen

9.1 When shear is completed, perform the following steps:

9.1.1 Remove the axial load and reduce the chamber and back pressures to zero.

9.1.2 With the specimen drainage valves remaining closed, quickly remove the specimen from the apparatus so that the specimen will not have time to absorb water from the porous discs.

9.1.3 Remove the rubber membrane (and the filter-paper strips or cage from the specimen if they were used) and determine the water content of the total specimen in accordance with the procedure outlined in Method D 2216. (Free water remaining on the specimen after removal of the membrane should be blotted away before obtaining the water content.) In cases where there is insufficient material from trimmings for index property tests, that is, where specimens have the same diameter as the sampling tube, the specimen should be weighed prior to removing material for index property tests and a representative portion of the specimen used to determine its final water content. Prior to placing the specimen (or portion thereof) in the oven to dry, sketch a picture or take a photograph of the specimen showing the mode of failure (shear plane, bulging, etc.).

10. Calculations

10.1 *Initial Specimen Properties*—Using the dry mass of the total specimen, calculate and record on the appropriate data sheet the initial water content, volume of solids, initial void ratio, initial degree of saturation, and initial dry unit weight. Calculate the specimen volume from values measured in 6.2 or 6.3. Calculate the volume of solids by dividing the dry mass of the specimen by the specific gravity of the solids (Note 22) and dividing by the density of water. Calculate the void ratio by dividing the volume of voids by the volume of solids where the volume of voids is assumed to be the difference between the specimen volume and the volume of the solids. Calculate dry density by dividing the dry mass of the specimen by the specimen volume.

NOTE 22—The specific gravity of solids can be determined in accordance with Test Method D 854 or it may be assumed based on previous test results.

10.2 *Specimen Properties After Consolidation*—Calculate the specimen height and area after consolidation as follows:

10.2.1 Height of specimen after consolidation, H_c, is determined from the following equation:

$$H_c = H_o - \Delta H_o \quad (3)$$

where:

H_o = initial height of specimen, in. (mm), and

ΔH_o = change in height of specimen at end of consolidation, in. (mm).

10.2.2 The cross-sectional area of the specimen after consolidation, A_c, shall be computed using one of the following methods (assuming consistent units are used). The choice of the method to be used depends on whether shear data are to be computed as the test is performed (in which case Method A would be used) or on which of the two methods in the opinion of a qualified person yield specimen conditions considered to be most representative of those after consolidation.

10.2.2.1 *Method A:*

$$A_c = (V_o - \Delta V_{sat} - \Delta V_c)/H_c \quad (4)$$

where:

V_o = initial volume of specimen, in.^{3} (mm^3),

ΔV_c = change in volume of specimen during consolidation as indicated by burette readings, in.^{3} (mm^3), and

ΔV_{sat} = change in volume of specimen during saturation, in.^{3} (mm^3), as follows:

$$\Delta V_{sat} = 3V_o\,\Delta H_s/H_o$$

where:

ΔH_s = change in height of the specimen during saturation, in. (mm).

10.2.2.2 *Method B:*

$$A_c = (V_{wf} + V_s)/H_c \quad (5)$$

where:

V_{wf} = final volume of water (based on final water content), in.^{3} (mm^3), and

V_s = volume of solids, in.^{3} (mm^3), as follows:

$$V_s = w_s/(G_s\rho_w)$$

where:

w_s = specimen dry mass, lb (kg),

G_s = specific gravity of solids, and

ρ_w = density of water, lb/in.^{3} (kg/mm^3).

10.2.3 Using the calculated dimensions of the specimen after consolidation, and assuming that the water content after consolidation is the same as the final water content, calculate the consolidated void ratio and degree of saturation.

NOTE 23—If the specimen absorbs water from the porous discs during the time it is being removed from the apparatus, the calculated degree of saturation based on the final water content will exceed 100 %.

NOTE 24—In this test method, the equations are written such that compression and consolidation are considered positive.

10.3 *Shear Data:*

10.3.1 Calculate the axial strain, ϵ_1, for a given applied axial load as follows:

$$\epsilon_1 = \Delta H/H_c \quad (6)$$

where:

ΔH = change in height of specimen during loading as read from deformation indicator, in. (mm), and

H_c = height of specimen after consolidation, in. (mm).

10.3.2 Calculate the cross-sectional area, A, for a given applied axial load as follows:

$$A = A_c/(1 - \epsilon_1) \quad (7)$$

where:

A_c = average cross-sectional area of the specimen after consolidation, in.^{2} (mm^2), and

ϵ_1 = axial strain for the given axial load.

NOTE 25—The cross-sectional area computed in this manner is based on the assumption that the specimen deforms as a right circular cylinder during shear. In cases where there is localized bulging, it may be possible to determine more accurate values for the area based on specimen dimension measurements obtained after shear.

10.3.3 Calculate the principal stress difference (deviator stress), $\sigma_1 - \sigma_3$, for a given applied axial load as follows:

$$\sigma_1 - \sigma_3 = P/A \quad (8)$$

where:

P = given applied axial load (corrected for uplift and piston friction if required as obtained in 8.4.1.3), lb (kN), and

A = corresponding cross-sectional area, in.^{2} (mm^2).

10.3.4 Calculate the effective minor principal stress, σ'_3 for a given applied axial load as follows:

$$\sigma'_3 = \sigma_3 - \Delta u \quad (9)$$

where:

σ_3 = effective consolidation stress, psi (kPa), and

Δu = induced pore-water pressure at the given axial load (total pore-water pressure minus the total back pressure), psi (kPa).

10.4 *Principal Stress Difference (Deviator Stress) and Induced Pore-Water Pressure versus Strain Curves*—Prepare graphs showing relationships between principal stress difference (deviator stress) and induced pore-water pressure with axial strain, plotting deviator stress and induced pore-water pressure as ordinates and axial strain as abscissa. Select the principal stress difference (deviator stress) and axial strain at failure in accordance with a definition in 3.2.3.

10.5 *$p' - q$ Diagram*—Prepare a graph showing the relationship between p', $(\sigma'_1 + \sigma'_3)/2$ and q, $(\sigma_1 - \sigma_3)/2$, plotting q as ordinate and p' as abscissa using the same scale. The value of p' for a given axial load may be computed as follows:

$$p' = ((\sigma_1 - \sigma_3) + 2\sigma'_3)/2 \quad (10)$$

where:

$\sigma_1 - \sigma_3$ = principal stress difference (deviator stress), psi (kPa), and

σ'_3 = effective minor principal stress, psi (kPa).

10.6 *Correction for Filter-Paper Strips*—For vertical filter-paper strips which extend over the total length of the specimen, apply a filter-paper strip correction to the computed values of the principal stress difference (deviator stress), if the error in principal stress difference (deviator stress) due to the strength of the filter-paper strips exceeds 5 %.

10.6.1 For values of axial strain above 2 %, use the following equation to compute the correction:

$$\Delta(\sigma_1 - \sigma_3) = K_{fp}P_{fp}/A_c \quad (11)$$

where:

$\Delta(\sigma_1 - \sigma_3)$ = correction to be subtracted from the measured principal stress difference (deviator stress), psi (kPa),

K_{fp} = load carried by filter-paper strips per unit length of perimeter covered by filter, lbf/in. (kN/mm),

P_{fp} = perimeter covered by filter-paper, in. (mm), and

A_c = cross-sectional area of specimen after consolidation, in.^{2} (mm^2).

10.6.2 For values of axial strain of 2 % or less, use the following equation to compute the correction:

$$\Delta(\sigma_1 - \sigma_3) = 50\epsilon_1 K_{fp}P_{fp}/A_c \quad (12)$$

where:

ϵ_1 = axial strain (decimal form) and other terms are the same as those defined in 10.6.1.

NOTE 26—For filter-paper generally used in triaxial testing, K_{fp} is approximately 1.1 lb/in. (0.19 kN/m).

10.7 *Correction for Rubber Membrane*—Use the following equation to correct the principal stress difference (deviator stress) for the effect of the rubber membrane if the error in principal stress difference (deviator stress) due to the strength of the membrane exceeds 5 %:

$$\Delta(\sigma_1 - \sigma_3) = (4E_m t_m \epsilon_1)/D_c \quad (13)$$

where:

$\Delta(\sigma_1 - \sigma_3)$ = the correction to be subtracted from the measured principal stress difference (deviator stress), psi (kPa),

D_c = $\sqrt{4A_c/\pi}$ = diameter of specimen after consolidation, in. (mm),

E_m = Young's modulus for the membrane material, psi (kPa),

t_m = thickness of the membrane, in. (mm), and

ϵ_1 = axial strain (decimal form).

10.7.1 The Young's modulus of the membrane material may be determined by hanging a 0.5-in. (15-mm) circumferential strip of membrane using a thin rod, placing another rod through the bottom of the hanging membrane, and measuring the force per unit strain obtained by stretching the membrane. The modulus value may be computed using the following equation:

$$E_m = (F/A_m)/(\Delta L/L) \quad (14)$$

where:

E_m = Young's modulus of the membrane material, psi (kPa),

F = force applied to stretch the membrane, lbf (kN),

L = unstretched length of the membrane, in. (mm),

ΔL = change in length of the membrane due to application of the force, F, in. (mm), and

A_m = area of the membrane = 2 t_m W_s, in.^{2} (m^2 = mm^2/1 000 000)

where:

t_m = thickness of the membrane, and

W_s = width of circumferential strip (4.5 in. or 15 mm).

NOTE 27—A typical value of E_m for latex membranes is 200 psi (1400 kPa).

NOTE 28—The effect of the membrane on the lateral stress is usually assumed to be negligible.

NOTE 29—The corrections for filter-paper strips and membrane are based on simplified assumptions concerning their behavior during shear. Their actual behavior is complex and there is not a consensus on more exact corrections.

10.8 Determine the major and minor principal stresses at failure based on total stresses, σ_{1f} and σ_{3f} respectively, and on effective stresses, σ'_{1f} and σ'_{3f} respectively, as follows:

σ_{3f} = effective consolidation stress, psi (kPa),

σ_{1f} = $(\sigma_1 - \sigma_3)$ at failure + σ_{3f}, psi (kPa),

σ'_{3f} = $\sigma_{3f} - \Delta u_f$, psi (kPa), and

σ'_{1f} = $(\sigma_1 - \sigma_3)$ at failure + σ'_{3f}, psi (kPa), where Δu is the induced pore-water pressure at failure.

10.9 *Mohr Stress Circles*—Construct Mohr stress circles at failure based on total and effective stresses on an arithmetic plot with shear stress as ordinate and normal stress as abscissa using the same scales. As shown in Fig. 3, the circle based on total stresses is drawn with a radius of one-half the principal stress difference (deviator stress) at failure with its center at a value equal to one-half the sum of the major and minor total principal stresses. The Mohr stress circle based on effective stresses is drawn in a similar manner except that its center is at a value equal to one-half the sum of the major and minor effective principal stresses.

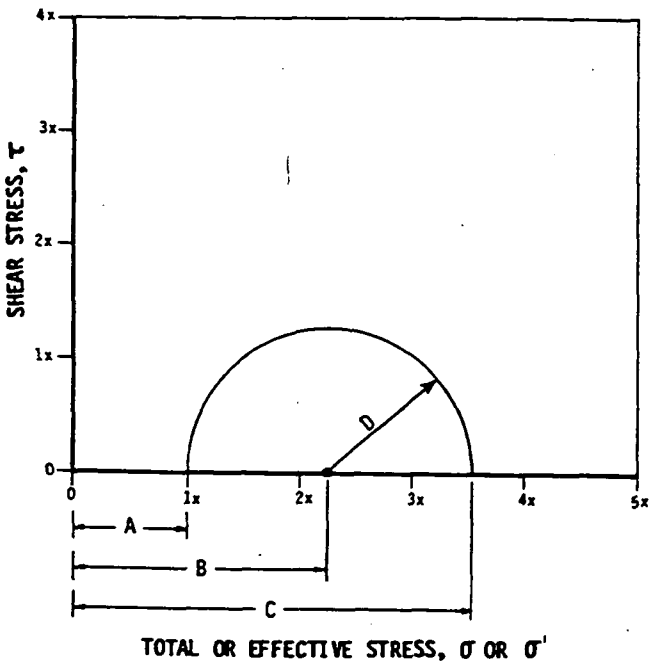

A = TOTAL OR EFFECTIVE MINOR PRINCIPAL STRESS (σ_3 or σ'_3)
B = AVERAGE OF TOTAL OR EFFECTIVE PRINCIPAL STRESSES
C = TOTAL OR EFFECTIVE MAJOR PRINCIPAL STRESS (σ_1 or σ'_1)
D = RADIUS OF THE MOHR'S CIRCLE; HALF THE PRINCIPAL STRESS DIFFERENCE

FIG. 3 Construction of Mohr Stress Circle

11. Report

11.1 The report shall include the following:

11.1.1 Identification data and visual description of specimen, including soil classification and whether the specimen is undisturbed, compacted, or otherwise prepared.

11.1.2 Values of plastic limit and liquid limit, if determined in accordance with Test Method D 4318.

11.1.3 Value of specific gravity of solids and notation if the value was determined in accordance with Test Method D 854 or assumed.

11.1.4 Particle-size analysis, if determined in accordance with Method D 422.

11.1.5 Initial specimen dry unit weight, void ratio, water content, and percent saturation.

11.1.6 Initial height and diameter of specimen.

11.1.7 Method followed for specimen saturation (that is, dry or wet method).

11.1.8 Total back pressure.

11.1.9 The pore pressure parameter B at the end of saturation.

11.1.10 Effective consolidation stress.

11.1.11 Time to 50 % primary consolidation.

11.1.12 Specimen dry unit weight, void ratio, water content, and degree of saturation after consolidation.

11.1.13 Specimen cross-sectional area after consolidation and method used for determination.

11.1.14 Failure criterion used.

11.1.15 The value of the principal stress difference (deviator stress) at failure and the values of the effective minor and major principal stresses at failure.

11.1.16 Axial strain at failure, percent

11.1.17 Rate of strain, percent/min.

11.1.18 Principal stress difference (deviator stress) and induced pore-water pressure versus axial strain curves as described in 10.4.

11.1.19 The $p' - q$ diagram for the test results.

11.1.20 Mohr stress circles based on total and effective stresses.

11.1.21 Failure sketch or photograph of the specimen.

11.1.22 Remarks and notations regarding any unusual conditions or other information necessary to properly interpret the results obtained, including any departures from the procedure outlined.

12. Precision and Bias

12.1 The variability of soil and resultant inability to determine a true reference value prevent development of a meaningful statement of bias. Data are being evaluated to determine the precision of this test method. In addition, the subcommittee is seeking pertinent data from users of this test method.

13. Keywords

13.1 Back pressure situation; cohesive soils; consolidated-undrained-triaxial compression test; consolidated undrained triaxial compressive strength; effective consolidation stress; shear strength; strength envelope.

The American Society for Testing and Materials takes no position respecting the validity of any patent rights asserted in connection with any item mentioned in this standard. Users of this standard are expressly advised that determination of the validity of any such patent rights, and the risk of infringement of such rights, are entirely their own responsibility.

This standard is subject to revision at any time by the responsible technical committee and must be reviewed every five years and if not revised, either reapproved or withdrawn. Your comments are invited either for revision of this standard or for additional standards and should be addressed to ASTM Headquarters. Your comments will receive careful consideration at a meeting of the responsible technical committee, which you may attend. If you feel that your comments have not received a fair hearing you should make your views known to the ASTM Committee on Standards, 1916 Race St., Philadelphia, PA 19103.

Designation: D 5084 - 90

Standard Test Method for Measurement of Hydraulic Conductivity of Saturated Porous Materials Using a Flexible Wall Permeameter[1]

This standard is issued under the fixed designation D 5084; the number immediately following the designation indicates the year of original adoption or, in the case of revision, the year of last revision. A number in parentheses indicates the year of last reapproval. A superscript epsilon (ε) indicates an editorial change since the last revision or reapproval.

1. Scope

1.1 This test method covers laboratory measurement of the hydraulic conductivity (also referred to as *coefficient of permeability*) of water-saturated porous materials with a flexible wall permeameter.

1.2 This test method may be utilized with undisturbed or compacted specimens that have a hydraulic conductivity less than or equal to 1×10^{-5} m/s (1×10^{-3} cm/s).

1.3 The hydraulic conductivity of materials with hydraulic conductivities greater than 1×10^{-5} m/s may be determined by Test Method D 2434.

1.4 The values stated in SI units are to be regarded as the standard, unless other units are specifically given. By tradition in U.S. practice, hydraulic conductivity is reported in centimetres per second, although the common SI units for hydraulic conductivity are metres per second.

1.5 *This standard does not purport to address the safety problems associated with its use. It is the responsibility of the user of this standard to establish appropriate safety and health practices and determine the applicability of regulatory limitations prior to use.*

2. Referenced Documents

2.1 *ASTM Standards:*

D 653 Terminology Relating to Soil, Rock, and Contained Fluids[2]

D 698 Test Methods for Moisture-Density Relations of Soils and Soil-Aggregate Mixtures Using 5.5-lb (2.49-kg) Rammer and 12-in. (305-mm) Drop[2]

D 1557 Test Methods for Moisture-Density Relations of Soils and Soil-Aggregate Mixtures Using 10-lb (4.54-kg) Rammer and 18-in. (457-mm) Drop[2]

D 1587 Practice of Thin-Walled Tube Sampling of Soils[2]

D 2113 Practice for Diamond Core Drilling for Site Investigation[2]

D 2216 Method for Laboratory Determination of Water (Moisture) Content in Soil, Rock, and Soil-Aggregate Mixtures[2]

D 2434 Test Method for Permeability of Granular Soils (Constant Head)[2]

D 4220 Practices for Preserving and Transporting Soil Samples[2]

D 4753 Specification for Evaluating, Selecting and Specifying Balances and Scales for Use in Soil and Rock Testing[2]

D 4767 Test Method for Consolidated-Undrained Triaxial Compression[2]

E 145 Specification for Gravity-Convection and Forced-Ventilation Ovens[3]

3. Terminology

3.1 *Definitions:*

3.1.1 *hydraulic conductivity, k*—the rate of discharge of water under laminar flow conditions through a unit cross-sectional area of a porous medium under a unit hydraulic gradient and standard temperature conditions (20°C).

DISCUSSION—The term *coefficient of permeability* is often used instead of *hydraulic conductivity*, but *hydraulic conductivity* is used exclusively in this test method. A more complete discussion of the terminology associated with Darcy's law is given in the literature.[4]

3.1.2 *pore volume of flow*—the cumulative quantity of flow into a test specimen divided by the volume of voids in the specimen.

3.1.3 For definitions of other terms used in this test method, see Terminology D 653.

4. Significance and Use

4.1 This test method applies to one-dimensional, laminar flow of water within porous materials such as soil and rock.

4.2 The hydraulic conductivity of porous materials generally decreases with an increasing amount of air in the pores of the material. This test method applies to water-saturated porous materials containing virtually no air.

4.3 This test method applies to permeation of porous materials with water. Permeation with other liquids, such as chemical wastes, can be accomplished using procedures similar to those described in this test method. However, this test method is only intended to be used when water is the permeant liquid.

4.4 It is assumed that Darcy's law is valid and that the hydraulic conductivity is essentially unaffected by hydraulic gradient. The validity of Darcy's law may be evaluated by measuring the hydraulic conductivity of the specimen at three hydraulic gradients; if all measured values are similar (within about 25 %), then Darcy's law may be taken as valid. However, when the hydraulic gradient acting on a test

[1] This test method is under the jurisdiction of ASTM Committee D-18 on Soil and Rock and is the direct responsibility of Subcommittee D18.04 on Hydrologic Properties of Soil and Rocks.

Current edition approved June 29, 1990. Published October 1990.

[2] *Annual Book of ASTM Standards*, Vol 04.08.

[3] *Annual Book of ASTM Standards*, Vol 04.02.

[4] Olson, R. E., and Daniel, D. E., "Measurement of the Hydraulic Conductivity of Fine-Grained Soils," *Symposium on Permeability and Groundwater Contaminant Transport, ASTM STP 746*, ASTM, 1981, pp. 18–64.

specimen is changed, the state of stress will also change, and, if the specimen is compressible, the volume of the specimen will change. Thus, some change in hydraulic conductivity may occur when the hydraulic gradient is altered, even in cases where Darcy's law is valid.

4.5 This test method provides a means for determining hydraulic conductivity at a controlled level of effective stress. Hydraulic conductivity varies with varying void ratio, which in turn changes when the effective stress changes. If the void ratio is changed, the hydraulic conductivity of the test specimen will likely change. To determine the relationship between hydraulic conductivity and void ratio, the hydraulic conductivity test would have to be repeated at different effective stresses.

4.6 The correlation between results obtained with this test method and the hydraulic conductivities of in-place field materials has not been fully investigated. Experience has sometimes shown that flow patterns in small test specimens do not necessarily follow the same patterns on large field scales and that hydraulic conductivities measured on small test specimens are not necessarily the same as larger-scale values. Therefore, the results should be applied to field situations with caution and by qualified personnel.

5. Apparatus

5.1 *Hydraulic System*—Constant head (Method A), falling head (Methods B and C), or constant rate of flow (Method D) systems may be utilized provided they meet the criteria outlined as follows:

5.1.1 *Constant Head*—The system must be capable of maintaining constant hydraulic pressures to within ±5 % and shall include means to measure the hydraulic pressures to within the prescribed tolerance. In addition, the head loss across the test specimen must be held constant to within ±5 % and shall be measured with the same accuracy or better. Pressures shall be measured by a pressure gage, electronic pressure transducer, or any other device of suitable accuracy.

5.1.2 *Falling Head*—The system shall allow for measurement of the applied head loss, thus hydraulic gradient, to within 5 % or better at any time. In addition, the ratio of initial head loss divided by final head loss over an interval of time shall be measured such that this computed ratio is accurate to within ±5 %. The head loss shall be measured with a pressure gage, electronic pressure transducer, engineer's scale, graduated pipette, or any other device of suitable accuracy. Falling head tests may be performed with either a constant tailwater elevation (Method B) or a rising tailwater elevation (Method C).

5.1.3 *Constant Rate of Flow*—The system must be capable of maintaining a constant rate of flow through the specimen to within 5 % or better. Flow measurement shall be by calibrated syringe, graduated pipette, or other device of suitable accuracy. The head loss across the specimen shall be measured to an accuracy of 5 % or better using an electronic pressure transducer or other device of suitable accuracy. More information on testing with a constant rate of flow is given in the literature.[5]

5.1.4 *System De-airing*—The hydraulic system shall be designed to facilitate rapid and complete removal of free air bubbles from flow lines.

5.1.5 *Back Pressure System*—The hydraulic system shall have the capability to apply back pressure to the specimen to facilitate saturation. The system shall be capable of maintaining the applied back pressure throughout the duration of hydraulic conductivity measurements. The back pressure system shall be capable of applying, controlling, and measuring the back pressure to 5 % or better of the applied pressure. The back pressure may be provided by a compressed gas supply, a deadweight acting on a piston, or any other method capable of applying and controlling the back pressure to the tolerance prescribed in this paragraph.

NOTE 1—Application of gas pressure directly to a fluid will dissolve gas in the fluid. A variety of techniques are available to minimize dissolution of gas in the back pressure fluid, including separation of gas and liquid phases with a bladder and frequent replacement of the liquid with de-aired water.

5.2 *Flow Measurement System*—Both inflow and outflow volumes shall be measured unless the lack of leakage, continuity of flow, and cessation of consolidation or swelling can be verified by other means. Flow volumes shall be measured by a graduated accumulator, graduated pipette, vertical standpipe in conjunction with an electronic pressure transducer, or other volume-measuring device of suitable accuracy.

5.2.1 *Flow Accuracy*—Required accuracy for the quantity of flow measured over an interval of time is 5 % or better.

5.2.2 *De-airing and Compliance of the System*—The flow-measurement system shall contain a minimum of dead space and be capable of complete and rapid de-airing. Compliance of the system in response to changes in pressure shall be minimized by using a stiff flow measurement system. Rigid tubing, such as metallic or rigid thermoplastic tubing, shall be used.

5.2.3 *Head Losses*—Head losses in the tubes, valves, porous end pieces, and filter paper may lead to error. To guard against such errors, the permeameter shall be assembled with no specimen inside and then the hydraulic system filled. If a constant or falling head test is to be used, the hydraulic pressures or heads that will be used in testing a specimen shall be applied, and the rate of flow measured with an accuracy of 5 % or better. This rate of flow shall be at least ten times greater than the rate of flow that is measured when a specimen is placed inside the permeameter and the same hydraulic pressures or heads are applied. If a constant rate of flow test is to be used, the rate of flow to be used in testing a specimen shall be supplied to the permeameter and the head loss measured. The head loss without a specimen shall be less than 0.1 times the head loss when a specimen is present.

5.3 *Permeameter Cell Pressure System*—The system for pressurizing the permeameter cell shall be capable of applying and controlling the cell pressure to within 5 % of the applied pressure. However, the effective stress on the test specimen (which is the difference between the cell pressure and the pore water pressure) shall be maintained to the desired value with an accuracy of 10 % or better. The device for pressurizing the cell may consist of a reservoir connected to the permeameter cell and partially filled with de-aired

[5] Olson, H. W., Morin, R. H., and Nichols, R. W., "Flow Pump Applications in Triaxial Testing," *Symposium on Advanced Triaxial Testing of Soil and Rock, ASTM STP 977*, ASTM, 1988, pp. 68–81.

water, with the upper part of the reservoir connected to a compressed gas supply or other source of pressure (see Note 2). The gas pressure shall be controlled by a pressure regulator and measured by a pressure gage, electronic pressure transducer, or any other device capable of measuring to the prescribed tolerance. A hydraulic system pressurized by deadweight acting on a piston or any other pressure device capable of applying and controlling the permeameter cell pressure to the tolerance prescribed in this paragraph may be used.

NOTE 2—De-aired water is commonly used for the cell fluid to minimize potential for diffusion of air through the membrane into the specimen. Other fluids, such as oils, which have low gas solubilities are also acceptable, provided they do not react with components of the permeameter. Also, use of a long (approximately 5 to 7 m) tube connecting the pressurized cell liquid to the cell helps to delay the appearance of air in the cell fluid and to reduce the flux of dissolved air into the cell.

5.4 *Permeameter Cell*—An apparatus shall be provided in which the specimen and porous end pieces, enclosed by a membrane sealed to the cap and base, are subjected to controlled fluid pressures. A schematic diagram of a typical cell is shown in Fig. 1.

5.4.1 The permeameter cell may allow for observation of changes in height of the specimen, either by observation through the cell wall using a cathetometer or other instrument, or by monitoring of either a loading piston or an extensometer extending through the top plate of the cell bearing on the top cap and attached to a dial indicator or other measuring device. The piston or extensometer should pass through a bushing and seal incorporated into the top plate and shall be loaded with sufficient force to compensate for the cell pressure acting over the cross-sectional area of the piston where it passes through the seal. If deformations are measured, the deformation indicator shall be a dial indicator or cathetometer graduated to 0.3 mm (0.01 in.) or better and having an adequate travel range. Any other measuring device meeting these requirements is acceptable.

5.4.2 In order to facilitate gas removal, and thus saturation of the hydraulic system, four drainage lines leading to the specimen, two each to the base and top cap, are recommended. The drainage lines shall be controlled by no-volume-change valves, such as ball valves, and shall be designed to minimize dead space in the lines.

5.5 *Top Cap and Base*—An impermeable, rigid top cap and base shall be used to support the specimen and provide for transmission of permeant liquid to and from the specimen. The diameter or width of the top cap and base shall be equal to the diameter or width of the specimen ±5 %. The base shall prevent leakage, lateral motion, or tilting, and the top cap shall be designed to receive the piston or extensometer, if used, such that the piston-to-top cap contact area is concentric with the cap. The surface of the base and top cap that contacts the membrane to form a seal shall be smooth and free of scratches.

5.6 *Flexible Membranes*—The flexible membrane used to encase the specimen shall provide reliable protection against leakage. The membrane shall be carefully inspected prior to use and if any flaws or pinholes are evident, the membrane shall be discarded. To minimize restrain to the specimen, the diameter or width of the unstretched membrane shall be

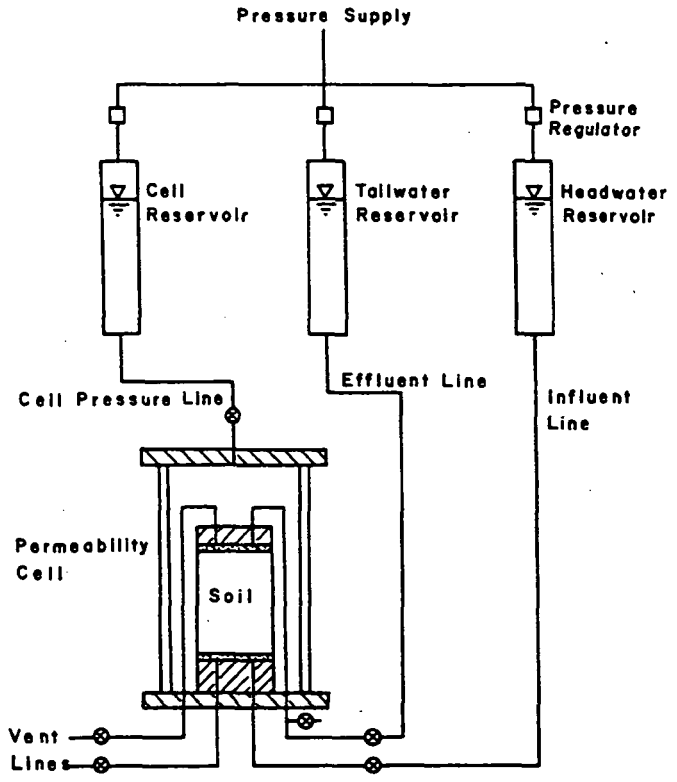

FIG. 1 Permeameter Cell

between 90 and 95 % of that of the specimen. The membrane shall be sealed to the specimen base and cap with rubber O-rings for which the unstressed, inside diameter or width is less than 90 % of the diameter or width of the base and cap, or by any other method that will produce an adequate seal.

NOTE 3—Membranes may be tested for flaws by placing them around a form sealed at both ends with rubber O-rings, subjecting them to a small air pressure on the inside, and then dipping them into water. If air bubbles come up from any point on the membrane, or if any visible flaws are observed, the membrane shall be discarded.

5.7 *Porous End Pieces*—The porous end pieces shall be of silicon carbide, aluminum oxide, or other material that is not attacked by the specimen or permeant liquid. The end pieces shall have plane and smooth surfaces and be free of cracks, chips, and nonuniformities. They shall be checked regularly to ensure that they are not clogged.

5.7.1 The porous end pieces shall be the same diameter or width (±5 %) as the specimen, and the thickness shall be sufficient to prevent breaking.

5.7.2 The hydraulic conductivity of the porous end pieces shall be significantly greater than that of the specimen to be tested. The requirements outlined in 5.2.3 ensure this.

5.8 *Filter Paper*—If necessary to prevent intrusion of material into the pores of the porous end pieces, one or more sheets of filter paper shall be placed between the top and bottom porous end pieces and the specimen. The paper shall have a negligibly small hydraulic impedance. The requirements outlined in 5.2.3 ensure that the impedance is small.

5.9 *Equipment for Compacting a Specimen*—Equipment (including compactor and mold) suitable for the method of compaction specified by the requester shall be used.

5.10 *Sample Extruder*—When the material being tested is a soil core, the soil core shall usually be removed from the sampler with an extruder. The sample extruder shall be capable of extruding the soil core from the sampling tube in the same direction of travel in which the sample entered the tube and with minimum disturbance of the sample. If the soil core is not extruded vertically, care should be taken to avoid bending stresses on the core due to gravity. Conditions at the time of sample extrusion may dictate the direction of removal, but the principal concern is to keep the degree of disturbance minimal.

5.11 *Trimming Equipment*—Specific equipment for trimming the specimen to the desired dimensions will vary depending on quality and characteristics of the sample; however, the following items listed may be used: lathe, wire saw with a wire about 0.3 mm (0.01 in.) in diameter, spatulas, knives, steel rasp for very hard clay specimens, cradle or split mold for trimming specimen ends, and steel straight edge for final trimming of specimen ends.

5.12 *Devices for Measuring the Dimensions of the Specimen*—Devices used to measure the dimensions of the specimen shall be capable of measuring to the nearest 0.3 mm (0.01 in.) or better and shall be constructed such that their use will not disturb the specimen.

5.13 *Balances*—The balance shall be suitable for determining the mass of the specimen and shall be selected as discussed in Specification D 4753. The mass of specimens less than 100 g shall be determined to the nearest 0.01 g. The mass of specimens 100 g or larger shall be determined to the nearest 0.1 g. The mass of specimens >1000 g shall be determined to the nearest 1.0 g.

5.14 *Equipment for Mounting the Specimen*—Equipment for mounting the specimen in the permeameter cell shall include a membrane stretcher or cylinder, and ring for expanding and placing O-rings on the base and top cap to seal the membrane.

5.15 *Vacuum Pump*—To assist with de-airing of permeameter system and saturation of specimens.

5.16 *Temperature Maintaining Device*—The temperature of the permeameter, test specimen, and reservoir of permeant liquid shall not vary more than ±3°C (±5.7°F). Normally, this is accomplished by performing the test in a room with a relatively constant temperature. If such a room is not available, the apparatus shall be placed in a water bath, insulated chamber, or other device that maintains a temperature within the tolerance specified in 5.16. The temperature shall be periodically measured and recorded.

5.17 *Water Content Containers*—The containers shall be in accordance with Method D 2216.

5.18 *Drying Oven*—The oven shall be in accordance with Specification E 145.

6. Reagents

6.1 *Permeant Water:*

6.1.1 The permeant water is the liquid used to permeate the test specimen and is also the liquid used in backpressuring the specimen.

6.1.2 The type of permeant water should be specified by the requestor. If no specification is made, tap water shall be used for the permeant liquid. The type of water utilized shall be indicated in the report.

NOTE 4—Chemical interactions between a permeant liquid and the porous material may lead to variations in hydraulic conductivity. Distilled water can significantly lower the hydraulic conductivity of clayey soils (see the literature).[4] For this reason, distilled water is not usually recommended as a permeant liquid. A permeant liquid used by some is 0.005 N $CaSO_4$, which can be obtained for example, by dissolving 6.8 g of nonhydrated, reagent-grade $CaSO_4$ in 10 L of de-aired, distilled water. This $CaSO_4$ solution is thought to neither increase nor decrease significantly the hydraulic conductivity of clayey soils. In areas with extremely brackish tap water, the $CaSO_4$ solution is recommended.

6.1.3 *Deaired Water*—To aid in removing as much air from the test specimen as possible, deaired water shall be used. The water is usually deaired by boiling, by spraying a fine mist of water into an evacuated vessel attached to a vacuum source, or by forceful agitation of water in a container attached to a vacuum source. If boiling is used, care shall be taken not to evaporate an excessive amount of water, which can lead to a larger salt concentration in the permeant water than desired. To prevent dissolution of air back into the water, deaired water shall not be exposed to air for prolonged periods.

7. Test Specimens

7.1 *Size*—Specimens shall have a minimum diameter of 25 mm (1.0 in.) and a minimum height of 25 mm. The height and diameter of the specimen shall be measured to the nearest 0.3 mm (0.01 in.) or better. The length and diameter shall vary by no more than ±5 %. The surface of the test specimen may be uneven, but indentations must not be so deep that the length or diameter vary by more than ±5 %. The diameter and height of the specimen shall each be at least 6 times greater than the largest particle size within the specimen. If, after completion of a test, it is found based on visual observation that oversized particles are present, that information shall be indicated on the report.

NOTE 5—Most hydraulic conductivity tests are performed on cylindrical test specimens. It is possible to utilize special equipment for testing prismatic test specimens, in which case reference to "diameter" in 7.1 applies to the least width of the prismatic test specimen.

7.2 *Undisturbed Specimens*—Undisturbed test specimens shall be prepared from a representative portion of undisturbed samples secured in accordance with Practice D 1587 or Practice D 2113, and preserved and transported in accordance with requirements for Group C materials in Practice D 4220. Specimens obtained by tube sampling or coring may be tested without trimming except for cutting the end surfaces plane and perpendicular to the longitudinal axis of the specimen, provided soil characteristics are such that no significant disturbance results from sampling. Where the sampling operation has caused disturbance of the soil, the disturbed material shall be trimmed. Where removal of pebbles or crumbling resulting from trimming causes voids on the surface of the specimen that cause the length or diameter to vary by more than ±5 %, the voids shall be filled with remolded material obtained from the trimmings. The ends of the test specimen shall be cut and not troweled (troweling can seal off cracks, slickensides, or other secondary features that might conduct water flow). Specimens shall be trimmed, whenever possible, in an environment where changes in moisture content are minimized. A controlled high-humidity room is usually used for this purpose. The mass and dimensions of the test specimen shall be

determined to the tolerances given in 5.12 and 5.13. The test specimen shall be mounted immediately in the permeameter. The water content of the trimmings shall be determined in accordance with Method D 2216.

7.3 *Laboratory-Compacted Specimens*—The material to be tested shall be prepared and compacted inside a mold in a manner specified by the requestor. If the specimen is placed and compacted in layers, the surface of each previously-compacted layer shall be lightly scarified (roughened) with a fork, ice pick, or other suitable object, unless the requester specifically states that scarification is not to be performed. Test Methods D 698 and D 1557 describe two methods of compaction, but any other method specified by the requestor may be used as long as the method is described in the report. Large clods of material should not be broken down prior to compaction unless it is known that they will be broken in field construction, as well, or the requestor specifically requests that the clod size be reduced. Neither hard clods nor individual particles of the material shall exceed ⅙ of either the height or diameter of the specimen. After compaction, the test specimen shall be removed from the mold, the ends scarified, and the dimensions and weight determined within the tolerances given in 5.12 and 5.13. After the dimensions and mass are determined, the test specimen shall be immediately mounted in the permeameter. The water content of the trimmings shall be determined in accordance with Method D 2216.

7.4 *Other Preparation Methods*—Other methods of preparation of a test specimen are permitted if specifically requested. The method of specimen preparation shall be identified in the report.

7.5 After the height, diameter, mass, and water content of the test specimen have been determined, the dry unit weight shall be calculated. Also, the initial degree of saturation shall be estimated (this information may be used later in the backpressure stage).

8. Procedure

8.1 *Specimen Setup:*

8.1.1 Cut two filter paper sheets to approximately the same shape as the cross section of the test specimen. Soak the two porous end pieces and filter paper sheets, if used, in a container of permeant water.

8.1.2 Place the membrane on the membrane expander. Apply a thin coat of silicon high-vacuum grease to the sides of the end caps. Place one porous end piece on the base and place one filter paper sheet, if used, on the porous end piece, followed by the test specimen. Place the second filter paper sheet, if used, on top of the specimen followed by the second porous end piece and the top cap. Place the membrane around the specimen, and using the membrane expander or other suitable O-ring expander, place one or more O-rings to seal the membrane to the base and one or more additional O-rings to seal the membrane to the top cap.

8.1.3 Attach flow tubing to the top cap, if not already attached, assemble the permeameter cell, and fill it with de-aired water or other cell fluid. Attach the cell pressure reservoir to the permeameter cell line and the hydraulic system to the influent and effluent lines. Fill the cell pressure reservoir with deaired water, or other suitable liquid, and the hydraulic system with deaired permeant water. Apply a small

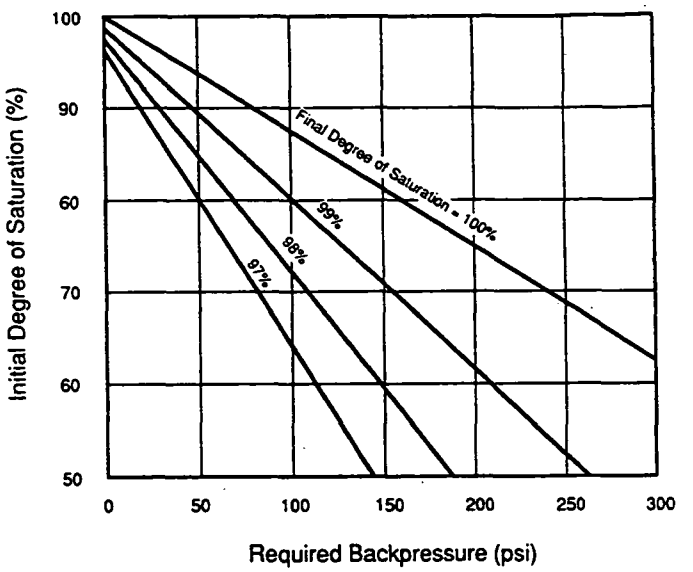

FIG. 2 Back Pressure to Attain Various Degrees of Saturation[6]

confining pressure of 7 to 35 kPa (1 to 5 psi) to the cell and apply a pressure less than the confining pressure to both the influent and effluent systems, and flush permeant water through the flow system. After all visible air has been removed from the flow lines, close the control valves. At no time during saturation of the system and specimen or hydraulic conductivity measurements shall the maximum applied effective stress be allowed to exceed that to which the specimen is to be consolidated.

8.2 *Specimen Soaking (Optional)*—To aid in saturation, specimens may be soaked under partial vacuum applied to the top of the specimen. Atmospheric pressure shall be applied to the specimen base through the influent lines, and the magnitude of the vacuum set to generate a hydraulic gradient across the sample less than that which will be used during hydraulic conductivity measurements.

NOTE 6—Soaking under vacuum is applicable when there are continuous air voids in the specimen. Soaking under vacuum is only recommended for test specimens with initial degrees of saturation below 70 %. The specimen may swell when exposed to water; the effective stress will tend to counteract the swelling. However, for materials that tend to swell, unless the applied effective stress is greater than or equal to the swell pressure, the specimen will swell.

8.3 *Backpressure Saturation*—To saturate the specimen, backpressuring is usually necessary. Figure 2 provides guidance on back pressure required to attain saturation.

NOTE 7—Figure 2 assumes that the water used for back pressure is deaired and that the only source for air to dissolve into the water is air from the test specimen. If air pressure is used to control the back pressure, pressurized air will dissolve into the water, thus reducing the capacity of the water used for back pressure to dissolve air located in the pores of the test specimen. The problem is minimized by using a long (>5 m) tube that is impermeable to air between the air-water interface and test specimen, by separating the back-pressure water from the air by a material or fluid that is relatively impermeable to air, by periodically replacing the back-pressure water with deaired water, or by other means.

[6] Lowe, J., and Johnson, T. C., "Use of Back Pressure to Increase Degree of Saturation of Triaxial Test Specimens," *Proceedings, ASCE Research Conference on Shear Strength of Cohesive Soils*, Boulder, CO, 1960.

8.3.1 Open the flow line valves and flush out of the system any free air bubbles using the procedure outlined in 8.1.3. If an electronic pressure transducer or other measuring device is to be used during the test to measure pore pressures or applied hydraulic gradient, it should be bled of any trapped air. Take and record an initial reading of specimen height, if being monitored.

8.3.2 Adjust the applied confining pressure to the value to be used during saturation of the sample. Apply backpressure by simultaneously increasing the cell pressure and the influent and effluent pressures in increments. The maximum value of an increment in backpressure shall be sufficiently low so that no point in the specimen is exposed to an effective stress in excess of that to which the specimen will be subsequently consolidated. At no time shall a head be applied so that the effective confining stress is <7 kPa (1 psi) because of the danger of separation of the membrane from the test specimen. Maintain each increment of pressure for a period of a few minutes to a few hours, depending upon the characteristics of the specimen. To assist in removal of trapped air, a small hydraulic gradient may be applied across the specimen to induce flow.

8.3.3 Saturation shall be verified with one of the three following techniques:

8.3.3.1 Saturation may be verified by measuring the *B* coefficient as described in Test Method D 4767 (see Note 8). The test specimen shall be considered to be adequately saturated if (*1*) the *B* value is ≥0.95, or (*2*) for relatively incompressible materials, for example, rock, if the *B* value remains unchanged with application of larger values of back pressure. The *B* value may be measured prior to or after completion of the consolidation phase (see 8.4). Accurate *B*-value determination can only be made if no gradient is acting on the specimen and all pore pressure induced by consolidation has dissipated.

NOTE 8—The *B* coefficient is defined for this type of test as the change in pore water pressure in the porous material divided by the change in confining pressure. Compressible materials that are fully saturated with water will have a *B* value of 1.0. Relatively incompressible, saturated materials have *B* values which are somewhat less than 1.0.

8.3.3.2 Saturation of the test specimen may be confirmed at the completion of the test by calculation of the final degree of saturation. The final degree of saturation shall be 100 ± 5 %. However, measurement of the *B* coefficient as described in 8.3.3.1 or use of some other technique (8.3.3.3) is strongly recommended because it is much better to confirm saturation prior to permeation than to wait until after the test to determine if the test was valid.

8.3.3.3 Other means for verifying saturation, such as measurement of the volume change of the specimen when the pore water pressure has been changed, can be used for verifying saturation provided data are available for similar materials to establish that the procedure used confirms saturation as required in 8.3.3.1 or 8.3.3.2.

8.4 *Consolidation*—The specimen shall be consolidated to the effective stress specified by the requestor. Consolidation may be accomplished in stages, if desired.

NOTE 9—The test specimen may be consolidated prior to application of backpressure. Also, the backpressure and consolidation phases may be completed concurrently if backpressures are applied sufficiently slowly to minimize potential for overconsolidation of the specimen.

8.4.1 Record the specimen height, if being monitored, prior to application of consolidation pressure and periodically during consolidation.

8.4.2 Increase the cell pressure to the level necessary to develop the desired effective stress, and begin consolidation. Drainage may be allowed from the base or top of the specimen, or simultaneously from both ends.

8.4.3 (Optional) Record outflow volumes to confirm that primary consolidation has been completed prior to initiation of the hydraulic conductivity test. Alternatively, measurements of the change in height of the test specimen can be used to confirm completion of consolidation.

NOTE 10—The procedure in 8.4.3 is optional because the requirements of 8.5 ensure that the test specimen is adequately consolidated during permeation because if it is not, inflow and outflow volumes will differ significantly. However, for accurate *B*-value determination, completion of consolidation should be confirmed (see 8.3.3.1). It is recommended that outflow volumes or height changes be recorded as a means for verifying the completion of consolidation prior to initialization of permeation. Also, measurements in the change in height of the test specimen, coupled with knowledge of the initial height, provide a means for checking the final height of the specimen.

8.5 *Permeation:*

8.5.1 *Hydraulic Gradient*—When possible, the hydraulic gradient used for hydraulic conductivity measurements should be similar to that expected to occur in the field. In general, hydraulic gradients from <1 to 5 cover most field conditions. However, the use of small hydraulic gradients can lead to very long testing times for materials having low hydraulic conductivity (less than about 1×10^{-6} cm/s). Somewhat larger hydraulic gradients are usually used in the laboratory to accelerate testing, but excessive gradients must be avoided because high seepage pressures may consolidate the material, material may be washed from the specimen, or fine particles may be washed downstream and plug the effluent end of the test specimen. These effects could increase or decrease hydraulic conductivity. If no gradient is specified by the requestor, the following guidelines may be followed:

Hydraulic Conductivity, cm/s	Recommended Maximum Hydraulic Gradient
1×10^{-3} to 1×10^{-4}	2
1×10^{-4} to 1×10^{-5}	5
1×10^{-5} to 1×10^{-6}	10
1×10^{-6} to 1×10^{-7}	20
less than 1×10^{-7}	30

NOTE 11—Seepage pressures associated with large hydraulic gradients can consolidate soft, compressible specimens and reduce their hydraulic conductivity. It may be necessary to use smaller hydraulic gradients (<10) for such specimens.

8.5.2 *Initialization*—Initiate permeation of the specimen by increasing the influent pressure (see 8.3.2). The effluent pressure shall not be decreased because air bubbles that were dissolved by the specimen water during backpressuring may come out of solution if the pressure is decreased. The back pressure shall be maintained throughout the permeation phase.

8.5.3 *Constant Head Test (Method A)*—Measure and record the required head loss across the test specimen to the tolerances stated in 5.1.1 and 5.2.3. The head loss across the specimen shall be kept constant ±5 %. Measure and record periodically the quantity of inflow as well as the quantity of outflow. Also measure and record any changes in height of the test specimen, if being monitored (see Note 11). Con-

tinue permeation until at least four values of hydraulic conductivity are obtained over an interval of time in which: (*1*) the ratio of outflow to inflow rate is between 0.75 and 1.25, and (*2*) the hydraulic conductivity is steady. The hydraulic conductivity shall be considered steady if four or more consecutive hydraulic conductivity determinations fall within ±25 % of the mean value for $k \geq 1 \times 10^{-10}$ m/s or within ±50 % for $k < 1 \times 10^{-10}$ m/s, and a plot of the hydraulic conductivity versus time shows no significant upward or downward trend.

8.5.4 *Falling-Head Tests (Methods B and C)*—Measure and record the required head loss across the test specimen to the tolerances stated in 5.1.2. For falling-head tests, at no time shall the applied head loss across the specimen be less than 75 % of the initial (maximum) head loss during each individual hydraulic conductivity determination (see Note 12). Periodically measure and record any changes in the height of the specimen, if being monitored. Continue permeation until at least four values of hydraulic conductivity are obtained over an interval of time in which: (*1*) the ratio of outflow to inflow rate is between 0.75 and 1.25, and (*2*) the hydraulic conductivity is steady (see 8.5.3).

NOTE 12—When the water pressure in a test specimen changes and the applied total stress is constant, the effective stress in the test specimen changes, which can cause volume changes that can invalidate the test results. The requirement that the head loss not decrease very much is intended to keep the effective stress from changing too much. For extremely soft, compressible test specimens, even more restrictive criteria might be needed. Also, when the initial and final head losses across the test specimen do not differ by much, great accuracy is needed to comply with the requirement of 5.1.2 that the ratio of initial to final head loss be determined with an accuracy of ±5 % or better. When the initial and final head loss over an interval of time do not differ very much, it may be possible to comply with the requirements for a constant head test (8.5.3) in which the head loss must not differ by more than ±5 % and to treat the test as a constant head test.

8.5.4.1 *Test with Constant Tailwater Level (Method B)*—If the water pressure at the downstream (tailwater) end of the test specimen is kept constant, periodically measure and record either the quantity of inflow or the level of water in the influent standpipe; measure and record the quantity of outflow from the test specimen.

8.5.4.2 *Test with Increasing Tailwater Level (Method C)*—If the water pressure at the downstream end of the test specimen rises during an interval of time, periodically measure and record either the quantity or inflow and outflow or the changes in water levels in the influent and effluent standpipes.

8.5.5 *Constant Rate of Flow Tests (Method D)*—Initiate permeation of the specimen by imposing a constant flow rate. Choose the flow rate so the hydraulic gradient does not exceed the value specified, or if none is specified, the value recommended in 8.5.1. Periodically measure the rate of inflow, the rate of outflow, and head loss across the test specimen to the tolerances given in 5.1.3. Also, measure and record any changes in specimen height, if being monitored. Continue permeation until at least four values of hydraulic conductivity are obtained over an interval of time in which (*1*) the ratio of inflow to outflow rates is between 0.75 and 1.25, and (*2*) hydraulic conductivity is steady (see 8.5.3).

8.6 *Final Dimensions of the Specimen*—After completion of permeation, reduce the applied confining, influent, and effluent pressures in a manner that does not generate significant volume change of the test specimen. Then carefully disassemble the permeater cell and remove the specimen. Measure and record the final height, diameter, and total mass of the specimen. Then determine the final water content of the specimen by the procedure of Method D 2216. Dimensions and mass of the test specimen shall be measured to the tolerances specified in 5.13 and 7.1.

NOTE 13—The specimen may swell after removal of back pressure as a result of air coming out of solution. A correction may be made for this effect, provided that changes in the length of the specimen are monitored during the test. The strain caused by dismantling the cell is computed from the length of the specimen before and after dismantling the cell. The same strain is assumed to have occurred in the diameter. The corrected diameter and actual length before the back pressure was removed are used to compute the volume of the test specimen prior to dismantling the cell. The volume prior to dismantling the cell is used to determine the final dry density and degree of saturation.

9. Calculation

9.1 *Constant Head and Constant Rate of Flow Tests (Methods A and D)*—Calculate the hydraulic conductivity, k, as follows:

$$k = QL/Ath \tag{1}$$

where:

k = hydraulic conductivity, m/s,
Q = quantity of flow, taken as the average of inflow and outflow, m^3,
L = length of specimen along path of flow, m,
A = cross-sectional area of specimen, m^2,
t = interval of time, s, over which the flow Q occurs, and
h = difference in hydraulic head across the specimen, m of water.

9.2 *Falling-Head Tests:*

9.2.1 *Constant Tailwater Pressure (Method B)*—Calculate the hydraulic conductivity, k, as follows:

$$k = \frac{aL}{At} \ln\left(\frac{h_1}{h_2}\right) \tag{2}$$

where:

a = cross-sectional area of the reservoir containing the influent liquid, m^2,
L = length of the specimen, m,
A = cross-sectional area of the specimen, m^2,
t = elapsed time between determination of h_1 and h_2, s,
h_1 = head loss across the specimen at time t_1, m, and
h_2 = head loss across the specimen at time t_2, m.

9.2.2 *Increasing Tailwater Pressure (Method C)*—Calculate the hydraulic conductivity, k, as follows:

$$k = \frac{a_{in}\, a_{out}\, L}{A\, t\, (a_{in} + a_{out})} \ln(h_1/h_2) \tag{3}$$

where:

a_{in} = cross-sectional area of the reservoir containing the influent liquid, m^2,
a_{out} = cross-sectional area of the reservoir containing the effluent liquid, m^2,
L = length of the specimen, m,
A = cross-sectional area of the specimen, m^2,
t = elapsed time between determination of h_1 and h_2, s,
h_1 = head loss across the specimen at time t, m, and
h_2 = head loss across the specimen at time t_2, m.

NOTE 14—For the case in which $a_{out} = a_{in} = a$, the equation for calculating k for a falling head test with a rising tailwater level is:

$$k = \frac{a\,L}{-2\,A\,t} \ln\left(\frac{h_1}{h_2}\right) \quad (4)$$

9.3 Correct the hydraulic conductivity to that for 20°C (68°F), k_{20}, by multiplying k by the ratio of the viscosity of water at test temperature to the viscosity of water at 20°C (68°F), R_T, from Table 1, as follows:

$$k_{20} = R_T k \quad (5)$$

10. Report

10.1 Report the following information:

10.1.1 Sample identifying information,

10.1.2 Any special selection and preparation process, such as removal of stones or other materials, or indication of their presence, if undisturbed specimen,

10.1.3 Descriptive information on method of compaction,

10.1.4 Initial dimensions of the specimen,

10.1.5 Initial water content and dry unit weight of the specimen,

10.1.6 Type of permeant liquid used,

10.1.7 Magnitude of total back pressure,

10.1.8 Maximum and minimum effective consolidation stress,

NOTE 15—The maximum effective stress exists at the effluent end of the test specimen and the minimum stress at the influent end.

10.1.9 Height of specimen after completion of consolidation, if monitored,

10.1.10 Range of hydraulic gradient used,

10.1.11 Final length, diameter, water content, dry unit weight, and degree of saturation of the test specimen,

10.1.12 Average hydraulic conductivity for the last four determinations of hydraulic conductivity (obtained as described in 8.5.3 to 8.5.5), reported with two significant figures, for example, 7.1×10^{-10} m/s, and reported in units of m/s (plus additional units, if requested or customary),

10.1.13 Graph or table of hydraulic conductivity versus time or pore volumes of flow is recommended.

TABLE 1 Correction Factor R_T for Viscosity of Water at Various Temperatures[A]

Temperature, °C	R_T	Temperature, °C	R_T
0	1.783	25	0.889
1	1.723	26	0.869
2	1.664	27	0.850
3	1.611	28	0.832
4	1.560	29	0.814
5	1.511	30	0.797
6	1.465	31	0.780
7	1.421	32	0.764
8	1.379	33	0.749
9	1.339	34	0.733
10	1.301	35	0.719
11	1.265	36	0.705
12	1.230	37	0.692
13	1.197	38	0.678
14	1.165	39	0.665
15	1.135	40	0.653
16	1.106	41	0.641
17	1.077	42	0.629
18	1.051	43	0.618
19	1.025	44	0.607
20	1.000	45	0.598
21	0.976	46	0.585
22	0.953	47	0.575
23	0.931	48	0.565
24	0.910	49	0.556

[A] $R_T = (-0.02452\,T + 1.495)$ where T is the degrees celsius.

11. Precision and Bias

11.1 *Precision*—Data are being evaluated to determine the precision of this test method. In addition, Subcommittee D18.04 on Hydrologic Properties of Soil and Rocks, is seeking pertinent data from users of this test method.

11.2 *Bias*—There is no accepted reference value for this test method, therefore, bias cannot be determined.

12. Keywords

12.1 coefficient of permeability; hydraulic barriers; hydraulic conductivity; liner; permeameter

The American Society for Testing and Materials takes no position respecting the validity of any patent rights asserted in connection with any item mentioned in this standard. Users of this standard are expressly advised that determination of the validity of any such patent rights, and the risk of infringement of such rights, are entirely their own responsibility.

This standard is subject to revision at any time by the responsible technical committee and must be reviewed every five years and if not revised, either reapproved or withdrawn. Your comments are invited either for revision of this standard or for additional standards and should be addressed to ASTM Headquarters. Your comments will receive careful consideration at a meeting of the responsible technical committee, which you may attend. If you feel that your comments have not received a fair hearing you should make your views known to the ASTM Committee on Standards, 1916 Race St., Philadelphia, PA 19103.

Standard Guide for Decommissioning of Ground Water Wells, Vadose Zone Monitoring Devices, Boreholes, and Other Devices for Environmental Activities[1]

This standard is issued under the fixed designation D 5299; the number immediately following the designation indicates the year of original adoption or, in the case of revision, the year of last revision. A number in parentheses indicates the year of last reapproval. A superscript epsilon (ε) indicates an editorial change since the last revision or reapproval.

1. Scope

1.1 This guide covers procedures that are specifically related to permanent decommissioning (closure) of the following as applied to environmental activities. It is intended for use where solid or hazardous materials or wastes are found, or where conditions occur requiring the need for decommissioning. The following devices are considered in this guide:

1.1.1 A borehole used for geoenvironmental purposes (see Note 1),

1.1.2 Monitoring wells,

1.1.3 Observation wells,

1.1.4 Injection wells (see Note 2),

1.1.5 Piezometers,

1.1.6 Wells used for the extraction of contaminated ground water, the removal of floating or submerged materials other than water such as gasoline or tetrachloroethylene, or other devices used for the extraction of soil gas,

1.1.7 A borehole used to construct a monitoring well, and

1.1.8 Any other vadose zone monitoring device.

1.2 Temporary decommissioning of the above is not covered in this guide.

NOTE 1—This guide may be used to decommission boreholes where no contamination is observed at a site (see Practice D 420 for details); however, the primary use of the guide is to decommission boreholes and wells where solid or hazardous waste have been identified. Methods identified in this guide can also be used in other situations such as the decommissioning of water supply wells and boreholes where water contaminated with nonhazardous pollutants (such as nitrates or sulfates) are present. This guide should be consulted in the event that a routine geotechnical investigation indicates the presence of contamination at a site.

NOTE 2—The term "well" is used in this guide to denote monitoring wells, piezometers, or other devices constructed in a manner similar to a well. Some of the devices listed such as injection and extraction wells can be decommissioned using this guide for information, but are not specifically covered in the text.

NOTE 3—Details on the decommissioning of multiple-screened wells are not provided in this guide due to the many methods used to construct these types of wells and the numerous types of commercially available multiple-screened well systems. However, in some instances, the methods presented in this guide may be used with few changes. An example of how this guide may be used is the complete removal of the multiple-screened wells by overdrilling.

1.3 Most monitoring wells and piezometers are intended primarily for water quality sampling, water level observatio or soil gas sampling, or combination thereof, to determi quality. Many wells are relatively small in diameter (<4-i (10.1 cm) inside diameter) and are used to monitor f hazardous chemicals in ground water. Decommissioning monitoring wells is necessary to:

1.3.1 Eliminate the possibility that the well is used f purposes other than intended,

1.3.2 Prevent migration of contaminants into an aquif or between aquifers,

1.3.3 Prevent migration of contaminants in the vado zone,

1.3.4 Reduce the potential for vertical or horizont migration of fluids in the well or adjacent to the well, and

1.3.5 Remove the well from active use when the well is r longer capable of rehabilitation, or has failed structurally; r longer required for monitoring; no longer capable of pr viding representative samples or is providing unreliab samples; or required to be decommissioned; or to me regulatory requirements.

NOTE 4—The determination of whether a well is providing representative water quality sample is not defined in this guic Examples of when a representative water quality sample may not collected include the biological or chemical clogging of well screens. drop in water level to below the base of the well screen, or comple silting of a tail pipe. These conditions may indicate that a well is n functioning properly.

1.4 This guide is intended to provide information f effective permanent closure of wells so that the physic structure of the well does not provide a means of hydraul communication between aquifers or react chemically in detrimental way with the environment.

1.5 The intent of this guide is to provide procedures th when followed result in a reasonable level of confidence i the integrity of the decommissioning activity. However, may not be possible to verify the integrity of the decommi sioning procedure. At this time, methods are not available t substantially determine the integrity of the decommissionin activity.

1.6 The values stated in inch-pound units are to b regarded as the standard. The SI units given in parenthes are for information only.

1.7 *This standard does not purport to address all of th safety problems, if any, associated with its use. It is th responsibility of the user of this standard to establish appr priate safety and health practices and determine the applic bility of regulatory limitations prior to use.*

[1] This guide is under the jurisdiction of ASTM Committee D-18 on Soil and Rock and is the direct responsibility of Subcommittee D18.21 on Ground Water and Vadose Zone Investigations.

Current edition approved Sept. 15, 1992. Published January 1993.

NOTE 5—If state and local regulations are in effect where the decommissioning is to occur, the regulations take precedence over this guide.

2. Referenced Documents

2.1 *ASTM Standards:*

C 150 Specification for Portland Cement[2]

C 618 Specification for Fly Ash and Raw or Calcined Pozzolan for Use as a Mineral Admixture in Portland Concrete Cement[2]

D 420 Practice for Investigating and Sampling Soil and Rock for Engineering Purposes[3]

D 4380 Test Method for Density of Bentonitic Slurries[3]

D 5088 Practice or the Decontamination of Field Equipment Used at Non-Radioactive Waste Sites[3]

D 5092 Practice for Design and Installation of Ground Water Monitoring Wells in Aquifers[3]

3. Terminology

3.1 *Descriptions of Terms Specific to This Standard:*

3.1.1 **abandonment**—see *decommissioning*.

3.1.2 *attapulgite clay*—a chain-lattice clay mineral. The term also applies to a group of clay minerals that are lightweight, tough, matted, and fibrous.

3.1.3 *borehole television log*—a borehole or well video record produced by lowering a television camera into the borehole or well. This record is useful in visually observing downhole conditions such as collapsed casing or a blocked screen.

3.1.4 *blowout*—a sudden or violent uncontrolled escape of fluids or gas, or both, from a borehole.

3.1.5 *caliper log*—a geophysical borehole log that shows to scale the variations with depth in the mean diameter of a cased or uncased borehole.

3.1.6 *cement, API, Class A*—a cement intended for use from the surface to a depth of 6000 ft (1828 m). This cement is similar to ASTM Type I cement.

3.1.7 *cement, API, Class B*—a cement intended for use from the surface to a depth of 6000 ft (1828 m) when conditions require moderate- to high-sulfate resistance. This cement is similar to ASTM Type II cement.

3.1.8 *cement, API, Class C*—this cement is intended for use from the surface to a depth of 6000 ft (1828 m) when conditions require high early strength. This cement is similar to ASTM Type III cement. Also available as a high sulfate resistant type.

3.1.9 *cement, API, Class G*—this cement is intended for use from the surface to a depth of 8000 ft (2438 m). It can be used with accelerators or retarders to cover a wide range of well depths and temperatures. No additions other than calcium sulfate or water, or both, can be interground or blended with the clinker during manufacture of the cement. Also available as several sulfate-resistant types.

3.1.10 *cement, API, Class H*—this cement is intended for use from the surface to a depth of 8000 ft (2438 m). It can be used with accelerators or retarders to cover a wide range of well depths and temperatures. No additions other than calcium sulfate or water, or both, can be interground or blended with the clinker during manufacture of the cement. Also available as a sulfate-resistant type.

3.1.11 *cement, API, Class J*—this cement is intende use from depths of 12 000 to 16 000 ft (3658 to 487 under conditions of extremely high temperatures and pressures. It can be used with accelerators and retarders to cover a range of well depths and temperatures. No additions of retarders other than calcium sulfate, or water, or both, can be interground or blended with the clinker during manufacture of the cement.

3.1.12 *cement bond (sonic) log*—a borehole geophysical log that can be used to determine the effectiveness of a cement seal of the annular space of a well.

3.1.13 *channeling*—the process of forming a vertical cavity resulting from a faulty cement job in the annular space.

3.1.14 *curing accelerator*—a material added to cement to decrease the time for curing. Examples are sodium chloride, calcium sulfate (gypsum), and aluminum powder.

3.1.15 *curing retarder*—a material added to cement to increase the time for curing. Sodium chloride in high concentrations is an example.

3.1.16 *decommissioning (closure)*—the engineered closure of a well, borehole, or other subsurface monitoring device sealed with plugging materials. Decommissioning also includes the planning and documenting of all associated activities. A synonym is abandonment.

3.1.17 *decontamination*—the process of removing undesirable physical or chemical constituents, or both, from equipment to reduce the potential for cross-contaminatio

3.1.18 *fallback*—shrinkage, settlement, or loss of plugg material placed in a borehole or well.

3.1.19 *fire clay*—a silicious clay rich in hydrous aluminum silicates.

3.1.20 *flow log*—a borehole geophysical log used to record vertical movement of ground water and movement of water into or out of a well or borehole and between formations within a well.

3.1.21 *geophysical borehole log*—a log obtained by lowering an instrument into a borehole and continuously recording a physical property of native or backfill material and contained fluids. Examples include resistivity, induction, caliper, sonic, and natural gamma logs.

3.1.22 *grout*—material consisting of bentonite, cement, or a cement-bentonite mixture.

3.1.23 *grout pipe*—a pipe or tube that is used to transport cement, bentonite, or other plugging materials from the ground surface to a specified depth in a well or borehole. The material may be allowed to flow freely or it may be injected under pressure. The term tremie pipe is frequently used interchangeably.

3.1.24 *hydraulic communication*—the migration of fluids from one zone to another, with reference to this guide; especially along a casing, grout plug, or through backfill materials.

3.1.25 *multiple-screened wells*—two or more monitoring wells situated in the same borehole. These devices can be either individual casing strings and screen set at a speci depth, a well with screens in more than one zone, or c consist of devices with screens with tubing or other collecting devices attached that can collect a discrete sample.

[2] *Annual Book of ASTM Standards*, Vol 04.02.

[3] *Annual Book of ASTM Standards*, Vol 04.08.

3.1.26 *native material*—in place geologic (or soil) materials encountered at a site.

3.1.27 *overdrilling*—the process of drilling out a well casing and any material placed in the annular space.

3.1.28 *perforation*—a slot or hole made in well casing to allow for communication of fluids between the well and the annular space.

3.1.29 *permanent plugging*—a seal that has a hydraulic conductivity that is equivalent or less than the hydraulic conductivity of the geologic formation. This term is often used with uncased boreholes.

3.1.30 *plow layer*—the depth typically reached by a plow or other commonly used earth turning device used in agriculture. This depth is commonly one to two feet (.3 m to .61 m) below land surface.

3.1.31 *plugging material*—a material that has a hydraulic conductivity equal to or less than that of the geologic formation(s) to be sealed. Typical materials include portland cement and bentonite.

3.1.32 *pre-conditioning*—an activity conducted prior to placing plugging material into a borehole in order to stabilize the hole.

3.1.33 *temporary decommissioning*—the engineered closure of a well intended to be returned to service at some later date (generally no more than six months). Temporary plugging should not damage the structural integrity of the well. Plugging materials consist of sand, bentonite, or other easily removed materials.

4. Summary of Guide

4.1 Information is provided on the significance of properly decommissioning boreholes and wells at sites containing or formerly containing solid or hazardous waste or hazardous materials or their byproducts, or that may be affected by solid or hazardous waste materials or their byproducts in the future. This guide may be used in situations where water quality in one aquifer may be detrimental to another aquifer either above or below the aquifer. The primary purpose of decommissioning activities is to permanently decommission the borehole or monitoring device so that the natural migration of ground water or soil vapor is not significantly influenced. Decommissioned boreholes and wells should have no adverse influence on the local environment than the original geologic setting.

4.2 It is important to have a good understanding of the geology, hydrogeology, well construction, historic and future land use, chemicals encountered, and the regulatory environment for successful decommissioning to occur.

4.3 Various materials suitable for decommissioning boreholes and wells are discussed, including their positive and negative attributes for decommissioning. A generalized procedure is provided that discusses the process from planning through implementation and documentation. Examples of typical practices are provided in the appendix.

5. Significance and Use

5.1 Decommissioning of boreholes and monitoring wells, and other devices requires that the specific characteristics of each site be considered. The wide variety of geological, biological, and physical conditions, construction practices, and chemical composition of the surrounding soil, rock, waste, and ground water precludes the use of a s decommissioning practice. The procedures discussed in guide are intended to aid the geologist or enginee selecting the tasks required to plan, choose materials for, carry out an effective permanent decommissioning o tion. Each individual situation should be evaluated s rately and the appropriate technology applied to best r site conditions. Considerations for selection of approp procedures are presented in this guide, but other consi ations based on site specific conditions should also be t into account.

NOTE 6—Ideally, decommissioning should be considered a integral part of the design of the monitoring well. Planning at this stage can make the decommissioning activity easier to accomplish Practice D 5092 for details on monitoring well construction.

5.2 This guide is intended to provide technical infor tion and is not intended to supplant statutes or regulati Approval of the appropriate regulatory authorities shoul an important consideration during the decommissior process.

6. Materials

6.1 The materials used for construction of a monitor well or other monitoring device to be decommissione part determines how it is decommissioned. Various mater are available for use in plugging boreholes and monitor wells. This section provides information on these materi

6.2 *Casing and Screen Materials:*

6.2.1 Various materials are used for well casing a screen. The most common materials used are: PVC, PT fiberglass, carbon steel, stainless steel, and aluminum. T cally, the same material is used for casing and screen i well, however, in some instances different materials may used in a well to achieve a particular purpose such corrosion protection, reduction of material costs, or i proving the integrity of ground water or soil vapor sampl This guide does not specifically address the use of more th one type of casing or screen material used in a well, howev the same decommissioning methods can frequently be us when more than one material is used (for example, PVC a PTFE, or stainless steel and carbon steel) in a well.

6.2.2 In selecting a well decommissioning method, PV PTFE, and fiberglass wells can be decommissioned usi similar methods as all three types of materials tend to be lo in tensile strength and easy to drill out or perfora Appendix X1 provides a discussion on various procedur that can be used for the decommissioning of PVC wells ar by reference PTFE and fiberglass wells.

6.2.3 Wells constructed of carbon steel, stainless steel, ar heavy walled aluminum can be decommissioned usi similar methods as these materials tend to have a high tensile strength that allows for the casing to be remove Appendix X1 provides a discussion on various procedur that can be used for the decommissioning of steel wells an by reference stainless steel and aluminum wells.

6.3 *Plugging Materials:*

6.3.1 Plugging materials should be carefully chosen fo well closure to be permanent. Basic material characteristic are listed as follows:

6.3.1.1 Plugging materials should not react with contam

nants or adversely react with ground water or geologic materials.

6.3.1.2 Plugging materials used in decommissioning wells, borings, etc. should have hydraulic conductivity (saturated condition) that is comparable to or lower than that of the lowest hydraulic conductivity of the geologic material being sealed.

6.3.1.3 Plugging materials must have sufficient structural strength to withstand pressures expected from native conditions.

6.3.1.4 Plugging materials must maintain sealing capabilities and not degrade due to chemical interaction, corrosion, dehydration, or other physical or chemical processes. Materials should maintain their design characteristics for the length of time contamination is present at the site.

6.3.1.5 Plugging materials should not be readily susceptible to cracking or shrinkage, or both.

6.3.1.6 Plugging materials must be capable of being placed at the position in the well or borehole in which they are needed and must have properties that reduce their unintended movement vertically and horizontally.

6.3.1.7 Plugging materials must be capable of forming a tight bond and seal with well casing and the formation.

6.3.18 Plugging materials must have properties that eliminate leaching or erosion of the material, under the conditions the material will be subjected. These include vertical or horizontal movement, or both, or contact with ground water or other existing conditions.

NOTE 7—The grain size of plugging material used in decommissioning operations conducted in areas where thick vadose zones occur should be coarser than materials used in areas where thin vadose zones or shallow saturated conditions occur. This is necessary as water is not transported effectively in coarse-grained materials under negative pore pressures. Coarse-grained materials should not be used where saturated conditions are likely to exist during the period of time that hazardous materials can be expected to occur at the site. It is important to determine the lithology and grain size distribution of materials adjacent to the borehole or well prior to selection of plugging materials.

NOTE 8—If coarse-grained materials are used to decommission the borehole or well, a layer of fine-grained material (such as cement or bentonite, or both) 1 or 2 ft (.3 or .61 m) thick should be placed at 10 ft (3 m) intervals in the borehole in the saturated zone. This layer should extend 2 to 3 ft (.61 to .91 m) above the highest expected level saturation is expected based on historical information on the water table for unconfined aquifers. A similar thickness of these materials should be used for confined aquifers. A similar 5-ft (1.5-m) seal of a low-permeability material should be placed near the ground surface to reduce the potential for entrance of fluids at the ground surface.

6.4 *Commonly Used Materials*—Subsections 6.2 and 6.3 introduced the general criteria that must be evaluated during the process of selecting the appropriate procedure and material for plugging a specific well. Because well construction and local geological conditions are site specific, a wide variety of materials and procedures may be used to complete the closure.

6.4.1 Section 6.4 presents a review of the plugging materials most commonly used to decommission monitoring wells. Table 1 summarizes these materials and lists the most important considerations (positive and negative) for their use. A detailed discussion of each material is presented in the following subsections.

6.4.2 *Portland Cement*—Portland cement may be used in any of its various forms to meet placement, strength, and durability criteria listed in 6.1. The amount of shrinkage o settling of neat cement is dependent on the amount of wate used. Higher water to cement ratios tend to increase shrinkage (1).[4]

6.5 *Specification C 150:*

6.5.1 *Type I*—Type 1 cement, a general-purpose material is the most commonly used cement. This material has a tendency to develop a relatively high heat of hydration when used in confined situations and has relatively low-sulfate resistance.

6.5.2 *Type II*—Somewhat slower strength development than Type I; however, Type II cement has moderate heat of hydration and moderate sulfate resistance.

6.5.3 *Type III*—Type III cement is used when high early strength is desired. This material is not commonly used in decommissioning activities because of its ability to quickly set. Care must be used in working with this material.

6.5.4 *Type IV*—Type IV cement is used where a low heat of hydration is desired. It is not commonly used in decommissioning activities.

6.5.5 *Type V*—Type V cement has high resistance to sulfate, and brine solutions. This material has ultimate strength development somewhat less than either Types I or II.

6.5.6 Type K cement is expansive and can be used to compensate for shrinkage. This cement is essentially Type I or more commonly Type II Portland Cement with additives to produce expansion. It can be of use in plugging situations where water-tightness is important. Type K cement contains calcium sulfoaluminate. When mixed with water, the hydration causes an expansion ranging from approximately 0.20 % (2).

6.6 *API Cements* (3):

6.6.1 *Class A*—Class A cement corresponds closely to ASTM Type 1. This cement is intended to be used from the surface to a depth of 6000 ft (1828 m).

6.6.2 *Class B*—Class B cement corresponds closely to ASTM Type II. It is intended for use from the surface to a depth of 6000 ft (1828 m) and is also available as a high-sulfate resistant variety.

6.6.3 *Class C*—Class C cement corresponds closely to ASTM Type III. It is intended for use from the surface to a depth of 6000 ft (1828 m). It is also available as a high-sulfate resistant variety.

6.6.4 *Class G*—Class G cement is intended for use from the surface to a depth of 8000 ft (2438 m) and can be used with accelerators or retarders to cover a wide range of depths and temperatures. The cement is also available as a high-sulfate resistant variety.

6.6.5 *Class H*—Class H cement is intended for use from the surface to a depth of 8000 ft (2438 m). It can be used with a wide variety of accelerators and retarders to cover a wide range of depths and temperatures. It is available only as a moderate-sulfate resistant type.

6.6.6 *Class J*—This cement is intended for use from a depth of 12 000 to 16 000 ft (3658 to 4877 m) where

[4] The boldface numbers in parentheses refer to a list of references at the the text.

TABLE 1 Properties of Common Plugging Materials

Plugging Material	Description	Positive Attributes	Negative Attributes
ASTM C-50 Portland Cement			
Type I	Most commonly used type of cement for plugging	Forms a good seal when used with bentonite in 3 to 5 % concentration. Commonly available and can be purchased premixed on-site.	High heats of hydration may be a problem in PVC-cased wells. Can shrink and crack; low-sulfate resistance. Should not be used in the presence of strong acids or in low-pH environments.
Type II	Similar to Type I, but with a moderate heat of hydration.	Moderate heat of hydration. Moderate resistance to sulfate.	Somewhat slower strength development than Type I; expensive. Can shrink and crack. Can be difficult to use. Should not be used in the presence of strong acids or in low-pH environments.
Type III	High early strength.	May prove useful in situations where high early strength is needed, such as borehole walls that have a tendency to collapse.	Not a common cement. Can set very quickly before decommissioning is completed. Should not be used in the presence of strong acids or in low-pH environments.
Type IV	Low heat of hydration.	May prove useful in situations where a low heat of hydration is required	Not a common cement. Should not be used in the presence of strong acids or in low-pH environments.
Type V	Similar to Type I, with high resistance to sulfate and brine.	High resistance to sulfate and brine. Low heat of hydration.	Ultimate strength is less than Types I and III. Expensive; should not be used in the presence of strong acids or in low-pH environments. Can be difficult to use. Can shrink or crack.
K	Expansive cement.	Basically Type I or Type II Portland Cement with additions (tricalcium sulfo aluminate for example) to provide for expansion. Expansion is generally in the range from 0.05 to 0.20 % Good resistance to sulfate attack.	
API 10			
Class A	Similar to ASTM Type I.	Can be used to a depth of 6000 ft (1828 m). Forms a good seal when used with bentonite in 3 to 5 % concentration. Commonly available and can be purchased premixed on-site.	High heats of hydration may be a problem in PVC-cased wells. Can shrink and crack; low-sulfate resistance. Should not be used in the presence of strong acids or in low-pH environments.
Class B	Similar to ASTM Type II.	Can be used to depth of 6000 ft (1828 m). Moderate heat of hydration. Moderate resistance to sulfate. Available as a high-sulfate resistant variety.	Somewhat slower strength development than Type I; expensive. Can shrink and crack. Can be difficult to use. Should not be used in the presence of strong acids or in low-pH environments.
Class C	Similar to ASTM Type III.	Can be used to a depth of 6000 ft (1828 m).	Can set very quickly before decommissioning is completed. Should not be used in the presence of strong acids or in low-pH environments. Can shrink and crack.
Class G	Useful in a wide range of temperatures and depths through the use of accelerators or retarders.	Can be used to a depth of 8000 ft (2438 m). Available as a sulfate-resistant variety.	Should not be used in the presence of strong acids or in low-pH environments. Can shrink and crack.
Class H	Useful in a wide range of depths and temperatures through the use of accelerators or retarders.	Can be used to a depth of 8000 ft (2438 m). Available only as a moderate sulfate type.	Should not be used in the presence of strong acids or in low-pH environments. Can shrink and crack.
Class J	Intended for use from a depth 12 000 to 16 000 ft (3658 to 4877 m).	Has use where extremely high temperatures and pressures occur.	Should not be used in the presence of strong acids or in low-pH environments. Can shrink and crack.
Pozzolanic cement	Addition of silicious materials to ASTM Type V or API Class A cement.	Good resistance to corrosive conditions and in reducing the permeability of cement.	Many types of materials can be used that can result in variable results.
Epoxy cements	Vinyl ester resins.	Good chemical resistance to acids and bases. Can use available equipment to place cement.	Very expensive. Poor chemical resistance to chlorinated hydrocarbons and acetic aid. Should be used only by experienced personnel. Water accelerates curing, must use diesel oil to precondition hole (diesel may increase contamination of site if hydrocarbons are a concern).
Bentonite			
Pellets	Granular bentonite compressed into a tablet	Uniform in size. Easy to use. Produces a low permeability seal.	Must be hydrated after placement. Shrinkage may occur when desiccated or when in contact with high concentrations of organic compounds (greater than 2 %) or materials that are strongly acidic or alkaline. Expensive.
Chips	Raw mined montmorillonite in the form of chunks ¼ to ¾ in. (.64 to 1.91 m) in size.	Inexpensive. No mixing equipment required. Forms a low-permeability seal.	Difficult to place. Must be hydrated after placement. Less swelling than beneficiated bentonite. Shrinkage may occur when desiccated when in contact with high concentrations of organic compounds (greater than 2 %) or materials that are strongly acidic or alkaline.
Granular	Raw mined montmorillonite crushed and seared to an 8 to 20-mesh size.	Can be placed at depth in dry holes. Forms a low- permeability seal.	Difficult to place in holes containing water as it quickly hydrates. Can bridge in hole. May desiccate when in contact with high concentrations of organic compounds (greater than 2 %) or materials that are strongly acidic or alkaline causing shrinkage.

TABLE 1 *Continued*

Plugging Material	Description	Positive Attributes	Negative Attributes
Powdered	Pulverized and seared bentonite that passes a 200- mesh screen. Used as drilling mud or as an additive to cement.	Used with cement to compensate for shrinkage (under saturated conditions). Other additives can be used to inhibit swelling, etc. Retards cement set; lowers heat of hydration.	May not be a desirable plugging material in deep vadose zones due to the drying out of the material, resulting in cracking. Difficult to place in holes containing water; quickly hydrates. Can bridge in hole. May desiccate when in contact with high concentrations of organic compounds (greater than 2 %) or materials that are strongly acidic or alkaline causing shrinkage.
High solids clay grout	Powdered bentonite (200 mesh) mixed with fresh water to form a slurry with a minimum of 20 % solids and a density of 9.4 lb/gal (1126 Kg/m³ g/L).	Does not shrink during curing. Low density reduces formation losses. Forms a low-permeability seal that stays flexible as long as it is hydrated.	May not be a desirable plugging material in deep vadose zones due to the drying out of the material, resulting in cracking. May desiccate when in contact with high concentrations of organic compounds (greater than 2 %) or materials that are strongly acidic or alkaline causing shrinkage. A low-strength material subject to expansion under low-pressure differentials such as artesian conditions.

extremely high temperatures and pressures can be expected to occur.

6.6.7 *Other Cements*—Other cements have been developed that may have applicability in decommissioning activities. These include the following:

6.6.7.1 Ultralight cements with a slurry density that can be as low as 6 lb/gal (719 cm Kg/L). This material can be made by foaming the cement with nitrogen or through the addition of hollow glass microspheres between 60 and 315 µm in diameter. The latter forms a slurry of between 9 and 12 lb/gal (1078 and 1438 Kg/L). Ultralight cements and microspheres have been reported (4) for cement unconsolidated sands and for plugging cavernous formations and lost circulation zones. Reference (5) provided similar information on microspheres. Microspheres can also be used in high-pressure applications when it may be desirable to limit density increases. Another advantage is the low water/cement ratio due to the low water absorbency and low density (5).

6.6.7.2 *Pozzolanic-Portland Cements*—These cements consist of silicious materials that develop into a cement in the presence of lime and water. Both natural materials of volcanic origin such as perlites (volcanic ashes), heat-treated clays, shales, tuffs, opaline cherts, diatomaceous earth and artificial materials consisting of byproducts from glass factories, furnace slag, and fly ash have been used (2, 4, 6). The large variety of materials that can be used as a source for pozzolans may result in variable results.

6.6.7.3 Pozzolans act to extend cement and decrease density. The specific gravity of fly ash ranges from 2.3 to 2.7 (depending upon the source) while portland cement is 3.1 to 3.2 (2). These materials can also provide improved resistance to corrosive fluids. Table 2 provides a comparison of sulfate resistance between ASTM Type V cement with and without pozzolans.

6.6.7.4 The improved resistance to corrosive materials is accomplished in part as many pozzolans contain zeolites which have the ability for ion exchange between the corrosive material and the alkaline component in the cement (7). Secondly, the use of pozzolans also decreases cement permeability over time. This occurs as a result of the increased percentage in hydrated cement containing materials resulting from the release of calcium hydroxide and the silica combining with lime from the cement to form a stable material (8).

6.6.7.5 Pozzolans are added to portland cement by adding 74 lb (33.6 Kg) (as fly ash) per sack of cement. If perlites are used, 2 to 6 % of bentonite by weight is needed to keep the perlite from floating (9).

6.6.8 Gypsum cements can be used for high early strength development and their ability to set rapidly. These cements expand approximately 0.3 %. This cement may have use in plugging highly permeable formations. Care should be taken in using gypsum cements due to the solubility of gypsum.

6.6.9 *Epoxy Resin Cements*—Epoxy (vinyl ester resins) cements may have applicability in decommissioning wells and boreholes where corrosive materials may be present (5).

6.6.9.1 Epoxy cement consists of an epoxy base, hardener, accelerator, and inert filler. Resin viscosity is reduced by the addition of a nonreactive liquid diluent that also controls exothermic heat during polymerization. An inert solid filler such as very fine silica or barite is added to further reduce reaction heat and increase strength (10).

6.6.9.2 There are several advantages of using epoxy cements. Reference (11) reports that a stronger bond occurred between the casing and the formation. Cole also reported resistance to various chemicals (see Table 3). The cement is highly resistant to high concentrations of hydrochloric and sulfuric acid, but is not suitable for use in environments where acetic acid, chlorinated hydrocarbons, or toluene are present.

TABLE 2 Comparison of ASTM Type V Cement With and Without Pozzolan Materials[A]

Cement Type	Relative Degree of Sulfate Attack	Percentage of Water Soluble Sulfate (as SO_4) in Soil, ppm	Sulfate (as SO_4) in Water Samples, ppm
V	Severe	0.20 to 2.00	1 500 to 10 000
V (plus pozzolan)	Very severe	2.00 or more	10 000 or more

[A] See Ref (4).

TABLE 3 List of Chemicals Reported Not to Affect Epoxy Cement[A]

Chemical	Concentration, %
Hydrochloric acid	30
Sulfuric acid	25
Chromic acid	up to 10
Nitric acid	5
Hydroxide	up to 20
Hypochlorite	up to 6

[A] See Ref (11).

6.6.9.3 This cement is expensive and requires removal of water (that reduces settling time) through the use of gelled and weighted diesel oil to precondition the hole. The use of this material may increase contamination at the site, if diesel oil (hydrocarbons) are a concern at the site.

6.6.10 *Cement Additives*—A number of materials can be added to cement to modify properties to meet a specific need. Cement additives can be used to extend, accelerate, retard, increase density, control fluid losses, control circulation losses, or reduce friction (4). Several of these materials have more than one use; for example, sodium chloride can be used to accelerate or retard cement. The most common cement additives are discussed in the following subsections. Figure 1 lists these additives and presents the relative impact of their use on selected performance criteria.

6.7 *Extenders:*

6.7.1 Bentonite is the most commonly used material in modifying cement properties. It can be added to most ASTM and API cements. In decommissioning activities, the percentage of bentonite added is generally no more than 4 %. It has the following effects when added to cement (4):

6.7.1.1 Lowers the hydraulic conductivity of the cement;

6.7.1.2 Increases slurry viscosity;

6.7.1.3 Reduces fluid loss to the formation;

6.7.1.4 Provides for a longer pumpability at normal pressures as a result of delaying strength development;

6.7.1.5 Reduces compressive strength; and

6.7.1.6 Lowers resistance to chemical attack.

6.7.2 Bentonite increases shrinkage as it ties up large volumes of water that would normally be in the cement. A second common extender are pozzolans which have already been addressed in 6.6.7.2.

6.8 *Accelerators:*

6.8.1 Accelerators hasten the settling of cement and are useful when voids occur, or when cement plugs are to be used in the first pour. Two common materials are used calcium chloride and sodium chloride.

6.8.2 Calcium chloride is available as a powder or flake. Flakes are the most commonly used form, as it is easy to store and can absorb some moisture without becoming lumpy (2). Two to four % of calcium chloride by weight is used to achieve maximum acceleration. The use of calcium chloride should be considered when a rapid set, a decrease in viscosity, and early strength are desired.

6.8.3 Sodium chloride can be added between 1.5 to 5 % by weight of cement to reduce setting time. Maximum acceleration occurs at a concentration of 2 to 2.5 % except when higher water ratios are used (2).

6.9 *Retarders:*

6.9.1 Sodium chloride can be used to retard the settling of cement as well as accelerate the setting of cement. Fifteen to seventeen % salt (14 to 16 lb (6.35 to 7.26 Kg) of salt per sack) by weight is added to retard cement (2).

6.9.2 Other chemicals (cellulose, lignosulfates) have been used as retarders, but are not appropriate for decommissioning activities without additional information on their compatibility with waste and their effect on water quality. Reference (12) indicates that sugar-derived retarders such as cellulose lignosulfates are destructive to cement strength and should not be used where strength is important. Organic

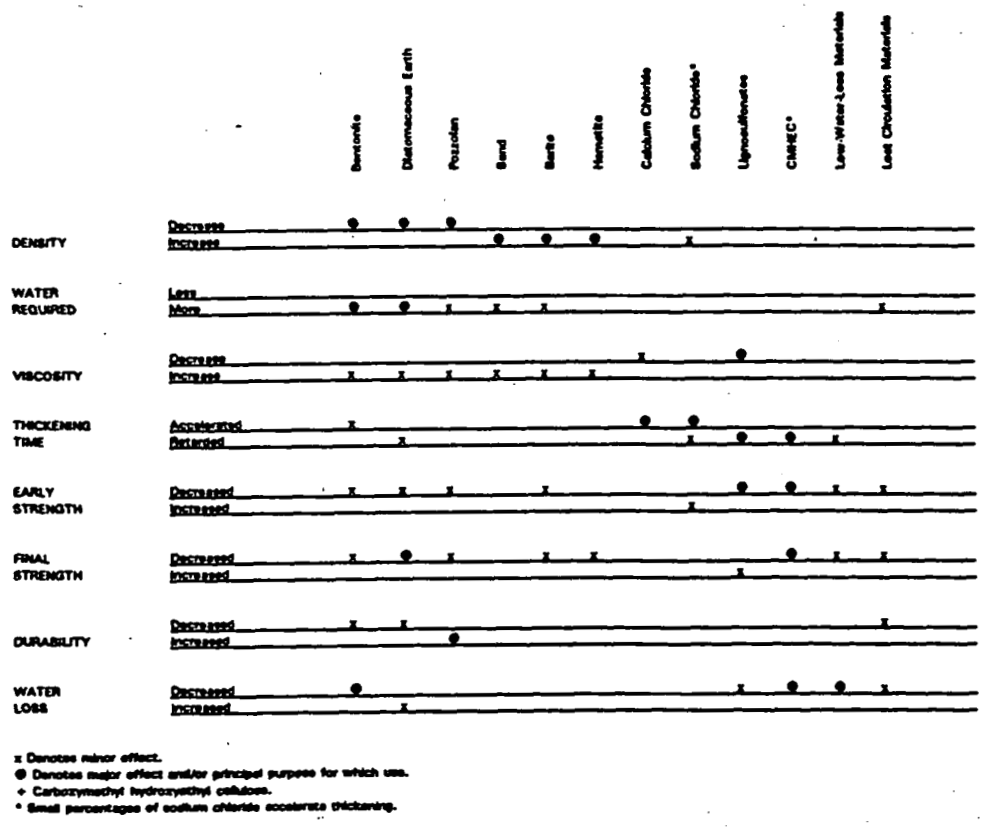

NOTE—See Ref (3).

FIG. 1 Effects of Some Additives on the Physical Properties of Cement

retarders should not be used for decommissioning activities.

6.10 *Density Improvers*—The density of cement can be improved to increase hydrostatic pressure. Sand can be used to increase density without affecting the cement chemically although additional water is required. Barite has been used, but may interact with waste and should not be used.

6.11 *Fluid Loss Controllers:*

6.11.1 Various organic materials such as cellulose can be used to produce a constant water to solids ratio that may have applicability when a grout is placed under pressure and water loss can occur. However, these materials may not be suitable for decommissioning activities, as they may contribute to contamination.

6.11.2 These organic materials (fibrous materials, cellophane flakes) act to block the movement of the grout into the formation. It is not desirable to use these materials in decommissioning activities due to their organic content that may adversely affect water quality and also may not result in a good plug.

6.12 *Friction Reducers (Dispersants):*

6.12.1 These materials reduce friction to improve flow and can be effective when the water cement ratio is reduced. Reduction of the water cement ratio is a method to decrease cement friction. (It is possible to reduce the amount of water added by using a dispersant (5). These materials (sodium chloride, polymers, and calcium lignosulfonate) also help to reduce the energy required to pump the grout. Polymers and calcium lignosulfonate may not be appropriate materials for decommissioning activity as they may affect water quality.

6.13 *Bentonite*—Bentonite is predominantly composed of the clay mineral sodium montmorillonite. It has the ability to absorb large quantities of water and swell to many times its original size when hydrated, and the material remains flexible. Bentonite clay may be used in any of its various forms to meet placement, strength, and sealing criteria listed in 6.3. The amount of shrinkage or settling of a bentonite seal is dependent on the percent solids of bentonite, composition of surrounding formation and its soil moisture. Higher water to bentonite ratios increase the likelihood of dehydration.

6.13.1 The permeability of bentonite is very low; hydraulic conductivities of 1×10^{-6} cm/s or less can be achieved. However, bentonite may desiccate in the presence of high concentrations of some organic chemicals, strong acids or bases, saline ground water, or when allowed to dry, thereby increasing its hydraulic conductivity. Bentonite is commercially available in the following forms:

6.13.1.1 *Pellets*—Pellets are made from granular powdered bentonite that has been compressed into tablets, commonly ¼ to ¾ in. (.64 cm to 1.91 cm) in diameter. Pellets have a low-moisture content, high density, and uniform size. Pellets should be composed of additive-free, high-swelling granular sodium bentonite. Properly placed in a well or borehole, pellets hydrate and expand creating a low permeability (1×10^{-6} cm/s) plug. Pellets can be used in the saturated zone provided the length of the water column is short. The rate of pour into the hole should not be more than 50 lb (22.7 Kg) of bentonite in 5 min (1).

6.13.1.2 *Preformed Donuts*—Commercial preformed donuts consist of compressed bentonite and may have use in decommissioning activities.

6.13.2 *Chips*—Raw mined sodium montmorillonite in the form of chunks that are ¼ to ¾ in. (6.4 to 1.91 cm) diameter. Their angular shape can make it difficult to chips to the desired depth in a small-diameter we borehole without bridging.

6.13.2.1 Fine-grained material resulting from the mechanical breakdown during shipping may cause a problem in the placement of chips due to clumping. Fines should be screened through a ¼-in. (6.4-mm) mesh screen before use.

6.13.2.2 The lower affinity for water that chips have allow them to fall through a water column without rapid hydration.

6.13.2.3 Chips have applicability in large-diameter boreholes and when carefully dropped into the hole to reduce bridging.

6.13.3 *Granular*—Raw-mined sodium montmorillonite without any additives that has been crushed and seared to an 8 to 20-mesh size. This material can be placed at depth in dry holes but hydrates quickly when placed into water. It often sticks to wet borehole walls and bridges when placed through water. Granular material is best suited for use in the unsaturated zone with enough water added to provide adequate hydration.

6.13.3.1 Fines can clump when in contact with water (1). Fines result from mechanical breakdown of the material during shipping. Granular bentonite should be poured slowly to reduce the potential for bridging. In some situations, a pour rate not exceeding 50 lb (227 Kg) in 5 min has been used successfully (1).

6.13.4 *Powdered*—Untreated, seared, and grou bentonite that passes through a 200-mesh screen. It designed to be used in drilling fluids (muds) and as additive to other plugging materials such as cement. Bentonite powder slurry can become an effective grout material when combined with density-increasing additives and swelling inhibitors. Powdered bentonite should not be placed in dry form through water as it can bridge and stick to the borehole walls.

6.13.5 *High Solids Clay Grout*—This material is a blend of powdered polymer-free bentonite clays mixed with fresh water that forms a slurry with a minimum 20 % solids by weight and a density of 9.4 lb/gal (1126m^3 Kg/L). The slurry sets to a low-permeable plastic grout that generates no heat of hydration and does not shrink during curing in the presence of moisture. High solids clay grouts are commonly used for borehole plugging.

6.14 *Other Materials:*

6.14.1 A number of other materials have been used for plugging:

6.14.1.1 Attapulgite clay (may have applicability when used with a salt cement grout)[5]

6.14.1.2 Fire clay

6.14.1.3 Commercial packing materials

6.14.1.4 Packers

6.14.2 These materials are either inappropriate for use in decommissioning wells or boreholes where hazardous waste are encountered, or are not well studied for decommissioning wells in hazardous waste situations. Therefore, th

[5] Sutton, Fred, Personal Communication, 1990.

are not discussed in this guide.

6.14.3 Other materials have been used in the past for plugging wells and boreholes. Such materials as wooden or lead plugs should not be used because wood plugs may decay and lead is a potentially hazardous material. Mechanical packers composed of steel, plastic, or other materials can be used to assist in plugging.

7. Procedure

7.1 The primary purpose of most boreholes and monitoring wells is to monitor chemical compounds in the soil and ground water; however, there are other uses for subsurface monitoring including the measurement of temperature, soil gas sampling, or measurement of geophysical parameters. Use significant care in planning and implementing the decommissioning activity. It is important to obtain any required approvals from regulatory agencies, land owners, responsible parties, and other parties involved with the site. The following subsections present a recommended list of tasks in order that the decommissioning activity is successfully completed. Several of the steps outlined below do not pertain to boreholes and may be omitted.

7.2 *Planning:*

7.2.1 *Records Review*—Carefully review all available records and information relating to use of the monitoring well, borehole, etc. This review may include the following information:

7.2.1.1 Review applicable Federal, state, and local regulations relating to decommissioning activities. This may include contacting the applicable state or local agency having jurisdiction over drilling activities and preparation of the necessary documentation to drill (start card),

7.2.1.2 Collection of drillers' logs, geophysical logs, well construction, or geologic logs, including stratigraphy, structural geology, subsurface information, construction materials, screened interval, depth, hydraulic gradients (if water levels are available from other wells for its determination), legal location, date of installation, and photographs of the well,

7.2.1.3 Review of analytical chemical data for soil and ground water over the life of the well, and variations in water levels over time,

7.2.1.4 Review of records of the repairs, modifications, or other changes made to the well during the lifetime of the well,

7.2.1.5 Evaluation of historic, current, and planned land use,

7.2.1.6 Interviews with local workers and collection of other pertinent data such as discussing site conditions with local drillers, and

7.2.1.7 While not directly part of the decommissioning activity, proper disposal of displaced fluids and other materials (such as pulled or drilled out casing and cement seals) should be considered. Some of these materials may be classified as a hazardous waste under Federal, state, or local regulations. Conduct a review of these regulations and appropriate analytical documentation prior to classifying a material as a hazardous waste.

NOTE 9—This information may be summarized in a work plan. A work plan would also include a description of the site geology and hydrogeology and the decommissioning method to be used.

7.2.2 *Verification of Field Data*—The variety and quality of field practices and reporting require that the well be inspected to verify the actual field situation prior to decommissioning the well. The following list of procedures is recommended so that the actual condition of the well is known. Some of the borehole geophysical logs may not be applicable or may not be available for small diameter (2 in. (5.08 cm) or less) holes or wells.

7.2.2.1 Inspection of well head installation for integrity,

7.2.2.2 Current depth measurement of the casing and well. (The original depth of the borehole may be different than the well.),

7.2.2.3 *Water Quality Sampling and Analysis*—A final water quality sample taken from the well may be required for regulatory purposes;

7.2.2.4 *Downhole Inspections*—Including caliper logs to measure inside diameter; television logs to determine in-well conditions such as casing breaks, screen size, etc.; gamma logs to verify geologic information, if not already available; cement bond logs (sonic) to determine if the casing is firmly attached to grout (presently available for holes 2½ in. (6.35 cm) or larger in diameter); flow logs (flow meter or spinners) to determine if vertical flow occurs within the casing; and hydraulic integrity test to determine if the well casing is intact.

NOTE 10—Care should be taken in running any of these tools in a well with a collapsed or broken casing, or in boreholes that may collapse on the tool. Tools with active radioactive sources should not be used under these circumstances. Conduct downhole inspections only after obstructions are removed from the well casing or borehole.

7.2.2.5 Contact local owner, resident operator/observer to verify operations at the site.

7.2.2.6 Verification of field data is an ongoing responsibility. Use verified information to modify plans in order that the decommissioning activity is correctly conducted. Continue this activity during the field phase and change specifications as needed.

7.2.3 *Review of Decommissioning Options*—After the records have been thoroughly reviewed and verified in the field, select an appropriate decommissioning procedure. Evaluate each possible option to determine the most appropriate method for the selection. The following list of evaluation criteria is recommended:

7.2.3.1 The potential for fluid movement from one aquifer into another by means of the borehole or well should be eliminated.

7.2.3.2 Materials to be used in plugging must be compatible with well casing and screen (if left in place), and with subsurface formation and ground water, etc. over the period of time hazardous materials are found at these sites.

7.2.3.3 Future land use (as is known at the time of decommissioning) should be compatible with decommissioning plans.

7.2.3.4 Closure options should be compatible with applicable federal, state, and local requirements.

7.3 *Implementation:*

7.3.1 *Field Procedure:*

7.3.1.1 Satisfactory completion of decommissioning is the primary purpose of this guide. All work performed on the borehole or well should be completed by competently trained drillers, equipped with appropriate tools, under the

000410

direction of a geological or engineering professional who is qualified to certify that the decommissioning is completed according to the planned procedures and is consistent with applicable regulations.

7.3.1.2 Approve any modifications to the proposed work plan and record in writing by the on-site geologist or engineer (or their representatives) prior to implementation.

7.3.1.3 The geologist or engineer should be on-site during the field activities to verify that the activities are completed as planned. Decommissioning operations can be successfully accomplished by careful planning and documentation (see 7.5). Maintain documentation of decommissioning activities for the post-closure period or period required by regulations (if specified). While regulations may require documentation for a period of 30 years, it is advisable to continue this activity for a period lasting as long as hazardous materials occur at the site.

7.3.1.4 Remove casing from the ground by either pulling or overdrilling (see 7.3.7). Depending upon construction, it may be necessary to leave the casing in place and produce suitable perforations in the screen and blank casing to allow for the plugging material to penetrate the annular space and formation (see 7.3.7). If grout in the annular space can be verified to be in good condition, the well can be decommissioned by cutting the blank casing and filling the screened interval with grout. Verifying the integrity of grout may be difficult to impossible. If a filter pack is present, it may be necessary to remove the filter pack after perforating the casing by washing or overdrilling. Several of the methods identified in this subsection are briefly discussed in the Appendix X1.

7.3.1.5 If well construction conditions are not adequately known and the well site contains hazardous materials, it may not be appropriate to remove the casing and screen, as this may increase the mobility of hazardous materials.

7.3.1.6 The borehole or well, or both, may require preconditioning for decommissioning to be successful. Preconditioning can reduce the potential for sloughing of the borehole wall if for example, a sodium montmorillonite clay occurs naturally in the formation and cement is used as the plugging material. The calcium contained in Portland cement exchanges with the sodium cation in bentonite clay decreasing the water contained in the clay and inducing sloughing. This problem can be significant in sediments or rocks that are under considerable pressure, causing a loss in part of the hole, thereby not completely plugging the borehole and possibly causing loss of all downhole equipment. These conditions are usually known by local drilling and well servicing contractors who should be contacted prior to the start of field operations.

7.3.1.7 Preconditioning consists of removing mud from borehole walls (when mud is used for drilling the borehole), or stabilizing a borehole prior to placement of the plugging material. If a drilling mud has been used to drill a borehole, preconditioning can involve the circulation of a high-quality, low-solids drilling fluid to remove gelled mud from the borehole and borehole walls prior to plugging. For the above situation, a high-quality bentonite or drilling fluid can be used. If a drilling mud is used as the plugging material, prepare fresh mud. The mud used in drilling contains cuttings and may also not have suitable properties (13). The selection and use of material(s) should meet the requirements specified in Section 6.

7.3.2 *Volume of Plugging Material Required:*

7.3.2.1 The geologist or engineer should calculate the volume of plugging material required for the borehole level after first taking into consideration applicable loss of material to the formation, voids intersecting the borehole, changes in borehole diameter, washout zones, and swelling or shrinkage of material. An approximation of the volume of material that may be required can frequently be provided by contacting local drillers or professionals.

7.3.2.2 Loss of plugging material into the formation may occur rapidly (within minutes) or after several hours or days. The volume of plugging material required to be on-site should be at a minimum, enough to fill one borehole volume, however, it is advisable to have available a minimum of 25 to 50 % in excess of the calculated borehole volume (1, 2). Additional plugging material should be readily available to site personnel under short notice, especially if it is common to lose plugging material into the formation or the material is required for clearing a hole (see 7.3.8.2).

7.3.2.3 A caliper log is helpful in boreholes or overdrilled holes to define hole diameter. If this information is not available, use an estimate of borehole diameter from the available well construction specifications. Calculate the volume of the borehole using the following:

$$v = \pi r^2 L$$

where:

v = volume,
L = length of borehole or well to be plugged, and
r = radius of hole.

7.3.2.4 Manuals listing the volume of a hole per foot (metre) such as Ref (3) can also be used. These manuals are available through major deep well cementing service companies. Assume in the calculations or table used that the derived volume is the minimum required for actual conditions due to possible loss of plugging material into the formation. Verify grout emplaced through estimating the volume of material leaving the hole for holes filled with mud or water. For all boreholes, measure the volume of material emplaced and check for the appearance of the material at the top of the interval grouted or land's surface, whichever is applicable.

7.3.2.5 Location of the grout at depth can be difficult because the top of the grout may not be able to be distinguished from water or other fluids in the borehole. One field procedure that has been applied to measure the level of the grout is to use a wooden sounding block with a weight attached to the block. The weight should be slightly denser than the grout.

NOTE 11—Location of the depth of plugging material in a borehole or well does not confirm that the plug has performed its intended purpose. Plugging materials may not have adhered to the walls of the borehole or well or may have been bypassed from the target zone. Therefore, placement of plugging materials is highly dependent upon proper preparation of the hole.

7.3.2.6 In areas where coarse materials are encountered, or considerable fracturing or solution openings occur, two or three times the calculated volume of material may be required to fill the hole. In extreme cases such as in karst terrains where large conduits may exist, it may be

000411

difficult to plug a well or borehole. In these situations, packers can be used to isolate critical intervals for filling with plugged materials above or below the karstic formations. Packers may also be used to isolate critical intervals within a well or borehole throughout the entire depth.

7.3.3 *Quality of Water Used for Grout*—Grout must be carefully mixed using water of a known chemical quality. The quality of the water must be compatible with the grouting material and not introduce contamination into the subsurface. For cement, water used should be free of silt, organic matter, alkali compounds, and have a total solids content of 500 mg/L or less (14). The grout should be weighed using a mud balance.

NOTE 12—Thicker grout mixtures may have greater effectiveness in plugging highly permeable materials or materials with large voids, but may be very difficult to pump through a grout pipe. Less viscous mixtures are easy to pump, but may be too mobile, have greater shrinkage, and take longer to set if additives to compensate these problems are not added.

7.3.4 *Mixing of Cement and Bentonite On-Site*—Both cement and bentonite can be mixed on site. Cement can also be purchased from a contractor and delivered premixed on site, provided the water used is of known and acceptable quality.

7.3.5 *Use of Curing Accelerators*—Curing accelerators can be used to hasten the initial set time for cement from 6 to 8 h to perhaps 2 or 3 h, provided the accelerator (typically calcium chloride, sodium chloride, aluminum powder, or gypsum) does not degrade the cement or react with the environment. The use of these materials may also require approval by regulatory authorities.

7.3.6 *Decommissioning of Boreholes:*

7.3.6.1 To achieve an effective seal, the borehole should be free of debris and foreign matter that may restrict the adhesion of the plugging materials to the borehole wall. Clear boreholes of excessive mud filtercake, or gelled mud (if used) and any bridges resulting from the removal of temporary casing, or when noncohesive materials (such as sand and gravel) are encountered that can lead to a collapsed borehole during decommissioning activities.

7.3.6.2 One method commonly used for effective removal of these materials is to advance a small grout pipe to the bottom of the borehole by use of water or a high-quality bentonite slurry and flush the hole. Flushing is continued until the blockage is removed, or noncohesive formations are stabilized. Use at least two borehole volume of materials. If the flushing fluid returning to the surface contains potentially hazardous materials, it may be necessary to place this material into containers for proper disposal.

7.3.6.3 As soon as the borehole is prepared, pump plugging material slowly through a grout pipe to displace the flushing fluid. Inject grout starting from the bottom of the hole, forcing other fluids upward. Complete grouting slowly to prevent channeling of the grout around any undesirable material remaining in the hole. Complete this operation in one continuous operation. Raise the grout pipe when pumping pressure increases significantly, or when undiluted grout reaches the surface. Regularly sample and evaluate overflowing grout for weight, presence of foreign material, or other changes. When the overflowing grout is similar to that being pumped down the hole, the plugging is consid complete.

7.3.6.4 Grout pipes should be the largest diameter th practical for field operations to reduce the required pump pressure. Cut the lower end of the pipe at an angle to al for the side discharge of the grout. Side discharge reduces potential for erosion of the borehole wall. Typically, hea walled PVC (Schedule 40 or greater) or thin-walled steel p is used for grouting purposes. Use caution while grout deeper holes in order that downhole pressure does not exc the rupture strength of the grout pipe.

7.3.6.5 Grouting of shallow auger holes or other borehc where grout pumping equipment is not readily available m be accomplished by placing grout through a side discha grout pipe that has a funnel attached to the top. As t grouting progresses, slowly raise the pipe. Take care wh using this procedure, as the low placement pressure may r completely fill or flush undesirable materials from t borehole. This procedure is only recommended when t entire borehole depth is 10 to 15 ft (3 to 4.6 m) or less.

7.3.6.6 Small diameter (<2-in. (5.08 cm-mm)) holes a difficult to plug. A small diameter (¾-in. (1.9 cm-mm grout pipe can be used, however, high-pumping pressur may be required or less viscous plugging materials may b necessary.

NOTE 13—It is important to avoid hydrofracturing or blowout shallow holes in unconsolidated materials when pressure grouting. general rule to avoid hydrofracturing is to restrict pumping pressure about 0.6 lb/in.^{2} (0.42 Kg/cm^2) of hydraulic pressure for each fo (metre) of overburden. In some instances, the pressure used must b reduced further.

7.3.6.7 A conservative method (15) of calculating max imum pressure is as follows:

$$Pm = (0.733 - 0.433\ Sg)d$$

where:

Pm = pressure of fluid injected at wellhead, lb/in.^{2} Kg/cm^2),

Sg = density (specific gravity) of the plugging materia (grout) (unitless), and

d = depth measured for the surface to the opening of the grout pipe (metres) feet.

Hydrofracturing typically occurs during start-up or restart of grouting.

7.3.6.8 Inject grout at the bottom of the hole, displacing grout, loose formation materials, and borehole fluids upward. Slowly pump grout to avoid channeling. Do this in one continuous operation. Raise the grout pipe when grout can no longer be easily forced from the pipe into the hole or when undiluted grout reaches the top of the hole and flows out. Sample and weigh this material. The weight of the grout returning to the surface should be the same as the grout pumped into the hole.

7.3.7 *Control of Elevated Formation Pressures*—Occasionally, a borehole or well may penetrate a formation that is under confined conditions (artesian head), or from which a gas is being released, under pressure. (Gas bubbling upward through the grout may result in open channels, or increase the permeability of the grout.) When this condition is encountered, sealing of the borehole requires that the grout pressure be maintained greater than the formation pressure until initial grout set occurs. The "shut-in-pressure" of the

formation can usually be determined by use of pressure gages attached to a casing that has been pushed or driven into the confining unit. This casing must be tightly sealed to prevent leakage around its annulus. (Separate packers or casing grout, or both, may be required to prevent leakage around the casing.)

7.3.7.1 Several procedures may be used to balance the formation pressure until the initial set of the grout has occurred. (See Fig. 2.) The procedure most often used to contain the pressure is to use a sufficient column of grout. If additional head pressure is required, increase the unit weight of the grout by the addition of sand, densifying additives (barite, or hematite) or decreasing the water cement ratio. Another alternative commonly used is to pump the grout through a check valve into the casing until the top of grout reaches the desired elevation. Maintain pressure above the grout by use of compressed air, or by use of a simple standpipe filled with water. If the standpipe procedure is used, pump grout through a tremie pipe extending through the water to prevent dilution.

7.3.7.2 After the initial grout set has occurred (minimum 24 h), the sustaining pressure (above atmospheric pressure) may be released. However, record the air pressure (or fluid level) in the air filled casing above the grout frequently for several days to verify that no leakage is occurring. If gas (of any variety) is present in the formation, analyze a sample of the air from the casing above the grout. Care should be taken under these conditions, as explosive or hazardous conditions may be present. Methane, the most commonly produced gas, is odorless, colorless, toxic, and extremely flammable. Safety precautions are advised.

7.3.7.3 Only after testing results confirm that the sea effective, is it advisable to complete the permanent closure removal of the near (or above) surface casing.

7.3.7.4 Measure any fallback or settlement of th surface (whether by gravity or under pressure) th after grout emplacement to the nearest foot an Correct any fallback with native or imported mate grade, or to a specified depth below grade, such as below plow layer. The depth is based on existing and proposed la use and regulatory requirements.

7.3.8 *Decommissioning of Wells and Other Monitor Devices:*

7.3.8.1 This discussion has applicability in decomm sioning ground water monitoring and injection wells and s gas monitoring wells, neutron probe access tubes, lysime and tensiometer and installations, and similar devices. pendix X1 should be consulted for additional informatio

7.3.8.2 It is desirable to remove all existing well constr tion materials such as screen, casing, filter pack, seal, a grout from the hole to reduce the potential for the format of a vertical conduit to occur at the contact between cas and annular seal; reduce the potential of these mater interfering with the decommissioning operation; decrease potential of a reaction between the materials used; or minimize the reaction with the native materials or grou water. In situations where well materials are removed a borehole collapse occurs, redrill the borehole following guidance provided in 7.3.6.

7.3.8.3 Steel casing may be removed using jacks to casing from the hole followed by lifting the casing out using a drill rig, backhoe, cranes, etc. of sufficient capacity

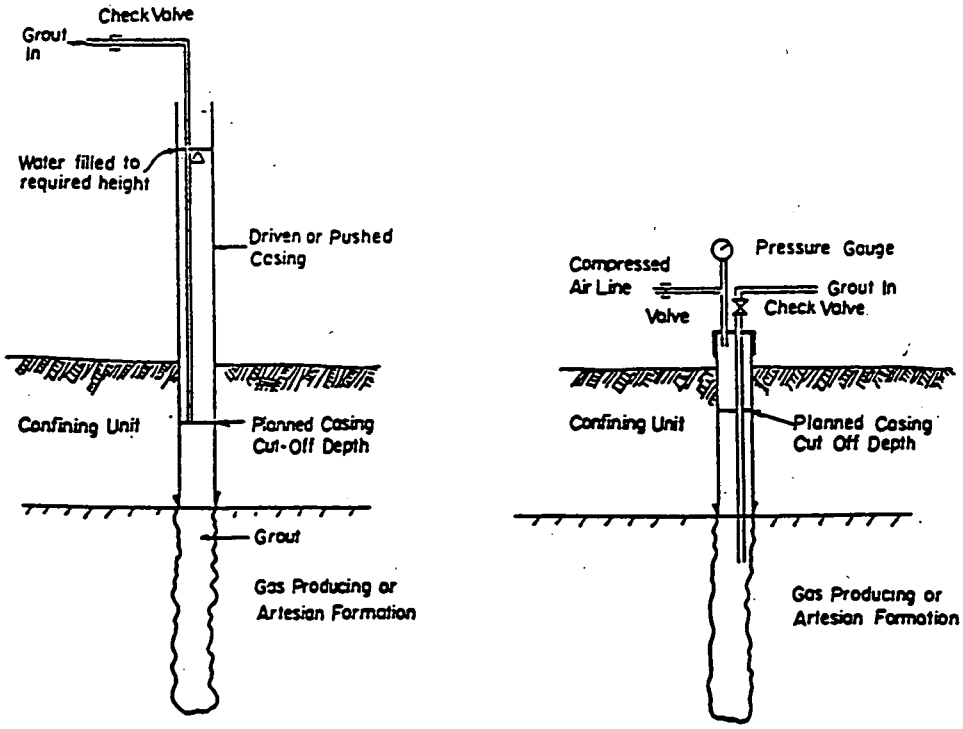

Stand Pipe To Contain Excess Formation Pressure

Compressed Air To Contain Excess Formation Pressure

FIG. 2 Two Procedures That Can Be Used to Overcome Elevated Formation Pressure

the annular space has been cemented over a long distance, this method may not be readily used unless a poor contact occurs between the casing and borehole. Small lengths of cement (typically less than 10 ft (3 m)) can be removed along with the casing if the drill rig has sufficient lifting capacity. When the casing cannot be removed, perforate the casing and screen using a suitable tool. This is necessary as encrustation or corrosion of the screen can block or completely close openings. A wide variety of commercial equipment is available for perforating casings and screens. Due to the diversity of application, consult an experienced contractor prior to selection of the technique. A minimum of four rows of perforations several inches (millimetres) long and a minimum of five perforations per linear foot (metre) of casing or screen is recommended.

7.3.8.4 Remove steel casing by overdrilling (overreaming) the casing. Overreaming can be done using an overreaming tool (see Fig. 3). Select a pilot bit that is nearly the same size as the inside diameter of the casing. The reaming bit should be slightly larger than the borehole diameter to remove all well construction materials and a small amount of native material. As drilling proceeds, the casing, grout, bentonite seal, filter pack, and other well materials are destroyed and returned to the surface. In situations when the grout in the annular space can be verified to be in good condition, it may be very difficult to remove casing and grout and grout can be left in place by pressure grouting the screened interval and casing. Verifying the integrity of the grout can be difficult.

7.3.8.5 PVC and other low tensile strength materials generally cannot be removed by pulling if they have been properly cemented into place. Overdrilling is necessary to remove these casing and screen materials.

7.3.8.6 A hollow stem auger equipped with outward facing carbide cutting teeth with a diameter 2 to 4 in. (50.8 to 1016 cm) larger than the casing may be used for overdrilling. Place the lead auger over the casing and rotate downward (see Fig. 4). The casing guides the cutting head and remains inside the auger. When the full diameter and length of the well has been penetrated, the casing and screen can be retrieved from the center of the auger. It is important to use outward facing cutting teeth in order that the cutting tool does not sever the casing and drift off center. An alternative is to install a steel guide pipe inside the well casing so that the augers can be centered.[6] Firmly attach this temporary working pipe to the inside of the casing by use of a packer, or other type of expansion or friction device. When the auger reaches full depth and the well materials have been removed, pump plugging materials through the hollow stem as the augers are withdrawn.

NOTE 14—Local regulations may allow leaving the PVC casing in place, if a good annular seal exists, or just removing blank casing if the integrity of the annular seal can be documented. It is generally difficult to document a good annular seal (tight fit, no fractures or channels) without the use of a cement bond log or similar method. A cement bond log cannot be run in small diameter wells (less than 2.5 in. (6.35 cm) in diameter) because a small diameter tool is not currently available. Also, this method is not reliable for PVC casings.

7.3.8.7 After removal of the casing, decommissioning can be completed in accordance with 7.3.6.

[6] Baker, Robert, Personal Communication, Layne Environmental, 1990.

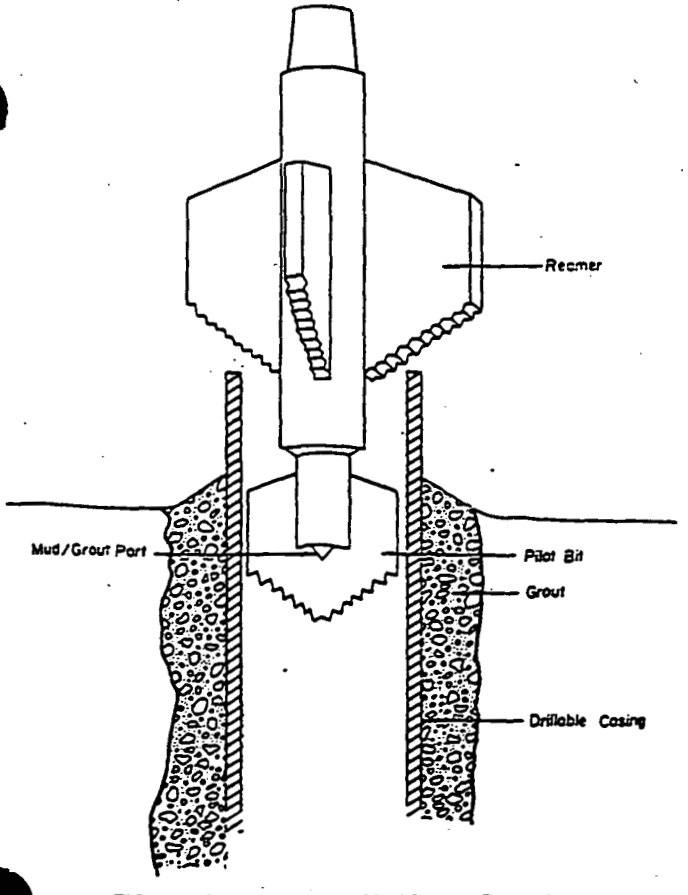

FIG. 3 Over Drilling by Mud Rotary Procedure

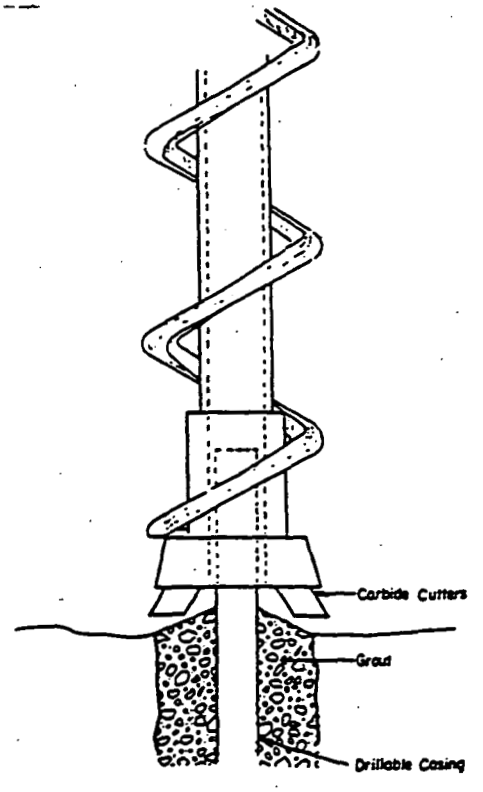

FIG. 4 Over Drilling by Hollow Stem Auger Procedure

NOTE 15—Wells with a maximum depth of 10 to 15 ft (3 to 4.6 m) can be removed by overdrilling, or when possible by pulling the casing out of the ground. The open hole is then filled with grout or other suitable plugging materials. A tamping rod can be used to tamp the material into place.

7.4 *Decontamination of Downhole Equipment:*

7.4.1 If hazardous waste or other contaminants occur at the site, decontaminate all tools placed into the borehole or well prior to entry (see Practice D 5088). Follow state and local regulations, if applicable. A hot water pressure wash or steam cleaning are examples of two typical decontamination methods. Other methods such as the use of solvents followed by rinsing with clean tap water and allowing equipment to air dry may also be acceptable. Also contain water and other materials used for decontamination for chemical analysis to determine proper disposal methods.

7.4.2 Do not flush grout pipes out with water while in or above the hole. Conduct all cleaning operations aboveground and manage appropriately as a hazardous or nonhazardous situation depending upon chemical analytical data on the site.

7.5 *Documentation:*

7.5.1 *Inspection Records*—The primary purpose of records of field work is to provide that appropriate measures have been taken so that the borehole or monitoring well is permanently decommissioned in a manner that minimizes it from being a conduit for fluid, water, or vapor migration. Properly decommissioned boreholes and wells should have no adverse influence on the local environment than the original geological setting.

7.5.2 *Narrative Report*—Maintain the narrative report of activities as a permanent record of the decommissioning activities and include the full set of field activities including:

7.5.2.1 Decommissioning date,

7.5.2.2 Personnel (with listing of company representation, including phone number and address),

7.5.2.3 Source of decommissioning method,

7.5.2.4 Step-by-step procedures used in the field,

7.5.2.5 Record of all measurements made, depths encountered, types and volume of fluids pumped and photograph before and after, and

7.5.2.6 All other pertinent information that is require based on site conditions or regulatory requireme problems encountered should also be documented

8. Report

8.1 At the completion of field work, present a form report to document the entire procedure used in the decon missioning process for the borehole or well. Addition information or requirements may be specified in governme regulations and should also be included in this report. Repo in detail the following items as a minimum:

8.1.1 *Background Information:*

8.1.1.1 Location of the borehole/well,

8.1.1.2 Purpose of the borehole/well,

8.1.1.3 History of the borehole/well,

8.1.1.4 Chemical parameters and concentrations prese during the active life of the well and at the time of pluggin and

8.1.1.5 Information collected prior to the inspectio record.

8.1.2 *Testing Prior to Decommissioning:*

8.1.2.1 Site characterization (if applicable),

8.1.2.2 Physical testing (depth, structural condition, etc.

8.1.2.3 Chemical testing results (last chemical analysis fc record), and

8.1.2.4 Geophysical logging results (if any).

8.1.3 *Decommissioning Design Procedure:*

8.1.3.1 Rationale for selection of method used, and

8.1.3.2 Presentation of a decommissioning plan.

8.1.4 *Field Implementation:*

8.1.4.1 Description of activities,

8.1.4.2 Variance from plan, and

8.1.4.3 Result of testing and measurements.

8.1.5 *Confirmation*—Statement of regulatory compliance

9. Keywords

9.1 abandonment; decommissioning; ground water mor itoring wells; hazardous waste; plugging

APPENDIX

(Nonmandatory Information)

X1. EXAMPLES OF SUCCESSFUL MONITORING WELL DECOMMISSIONING PRACTICES

X1.1 This appendix covers a general discussion of field procedures that have been used to decommission monitoring wells. These procedures are presented to provide technical guidance to assist in the development of decommissioning wells or boreholes. Local regulations may not allow implementation of some procedures. Two subsets of procedures are outlined, one for rigid steel casing and the second for lower tensile strength casing materials (plastic).

X1.2 *Steel Casing:*

X1.2.1 *Condition*—Properly grouted steel casing and screen, difficult to pull casing:

X1.2.1.1 *Suggestion*—Pressure pump plugging materials into well to above aquifer, place 3-ft (.91-mm) plug of plastic material (bentonite plug) above rigid plug then complet with rigid plugging material to surface. Place a PVC o neoprene plug or packer, located at the base of the rigi (cement) material to reduce the co-mingling of fluids due t different specific gravities. Complete decommissioning a surface according to local regulations.

X1.2.1.2 *Alternative*—Perforate steel casing and screen t allow plugging material to come into contact with th annular space and formation.

X1.2.1.3 *Advantage*—If (when) casing material corrodes the continually plastic bentonite plug will con t provide a suitable sealing zone.

000415

X1.2.2 *Condition*—Steel well materials, that are removable:

X1.2.2.1 *Suggestion*—Pull screen and casing, then redrill borehole to original depth using slightly larger diameter drill bit than the borehole. Complete closure by pressure sealing the borehole by grout pipe from bottom to top.

X1.2.2.2 *Advantage*—Casing and annular materials are completely removed and replaced with sealing material of equal or lower permeability (saturated zone) than the native geologic materials.

X1.2.3 *Condition*—Shallow screened well completed into permeable sand or gravel aquifer:

X1.2.3.1 *Suggestion*—Pull the casing and screen (grout also, if possible) then redrill the borehole to original depth. Completion should be by pressure sealing to the surface.

X1.2.3.2 *Advantage*—The possibility of hydraulic connections with the surface is greatly reduced.

X1.2.4 *Condition*—Steel casing and screen set into highly permeable formation (such as fractured limestone) that results in lost fluid circulation during drilling or decommissioning procedures:

X1.2.4.1 *Suggestion*—Fill highly permeable section with quick setting cement grout (addition of calcium chloride), or coarse gravel to base of casing, or hang "cement basket" at base of casing. Complete decommissioning with plugging materials pumped into place, including at least one section of permanent plastic seal.

X1.2.4.2 *Advantage*—Extremely permeable or highly cavernous materials may not be able to be filled sufficiently to allow closure similar to other cases. In such situations, prevention of vertical migration of fluids to or from that zone is the primary purpose of decommissioning.

X1.3 *Low-Tensile Strength Materials (that is, PVC, ABS, PTFE):*

X1.3.1 *Condition*—Properly constructed well that has a sealed annulus from the surface to the top of screen:

X1.3.1.1 *Suggestions*—Pressure grout in place after perforating the entire casing so that the screen and gravel pack are filled with grout; or over-ream the well using a drill bit diameter that is a minimum or slightly larger than the diameter of the annular space.

X1.3.2 *Condition*—Annulus is not permanently sealed and casing/screen cannot be pulled:

X1.3.2.1 *Suggestion*—Overdrill casing, screen and filter pack with a hollow stemmed auger or other suitable drilling method. Remove casing from bottom to top as augers are removed.

X1.3.2.2 *Advantage*—Complete well structure is removed. Grouting materials provide no avenue of fluid or gas migration after decommissioning.

X1.3.3 *Condition*—Annulus seal questionable; casing screen cannot be pulled:

X1.3.3.1 *Suggestion*—Use rotary tools equipped with pilot bit. Large portion of bit must be equal to or larger than diameter of original borehole. Drill out casing, annular material, to depth of well. Pressure seal after tools are removed.

X1.3.3.2 *Advantage*—Complete well structure is removed. Grouting materials do not provide pathways for fluid or gas migration after decommissioning.

X1.3.4 *Condition*—Annulus seal questionable, casing and screen may be pulled from firm clay soils:

X1.3.4.1 *Suggestion*—Use pulling rig equipped with down hole casing latch tool. Anchor tool at bottom of well and lift casing and screen. Pressure grout open hole from bottom to top. (This method may have applicability for shallow wells.)

X1.3.4.2 *Advantage*—This method is often possible in firm clay soils. Requires less expensive equipment than other procedures.

X1.3.5 *Condition*—Vadose zone monitoring devices such as lysimeters, tensiometers, neutron access holes, and similar devices installed vertically:

X1.3.5.1 *Suggestion*—Drill out the device and backfill as suggested in 7.3.8.5 and 7.3.8.6. (See also Note 15 in the text.)

X1.3.5.2 *Advantage*—The device and materials used to construct the device are removed reducing the potential for fluid movement from the surface to underlying materials and ground water.

REFERENCES

(1) Gaber, M. S., and Fisher, B., *Michigan Water Well Grouting Manual*, Michigan Department of Public Health, Lansing, MI, 1988, pp. 83.

(2) Roscoe Moss Company, *Handbook of Ground Water Development, Chapter 12, Water Well Cementing*, John Wiley, New York, NY 1990, pp. 232–252.

(3) Dowell Division of Dow Chemical, U.S.A., *Engineer's Handbook*, Houston, 1983, p. 77.027.

(4) Williams, Camila, and Evans, L., "Guide to the Selection of Cement, Bentonite, and Other Additives for Use in Monitor Well Construction," *First National Outdoor Action Conference on Aquifer Restoration, Monitoring and Geophysical Methods*, NWWA, Las Vegas, NV, 1987, pp. 325–343.

(5) George, Charles, and Bruce, T., "Cementing to Achieve Zone Isolation in Disposal Wells," in *International Symposium Subsurface Inspection of Liquid Wastes*, NWWA, New Orleans, LA, March 3–6, 1986, pp. 77–89.

(6) Anonymous, "Special Cements and Their Uses," *Concrete Construction*, Vol 18, No. 1, January, 1973, pp. 3–7.

(7) Berry, E., and Malhortra, V., "Fly Ash for Use in Concrete—A Critical Review," *Journal of the American Concrete Institute*, Vol 77, No. 2, 1980, pp. 57–73.

(8) Coleman, R. J., and Corrigan, G., "Fineness and Water-to-Cement Ratio in Relation to Volume and Permeability of Cement," *Petroleum Technology, Technical Publication No. 1266*, 1941, pp. 1–11.

(9) Dowell Schumberger, *Cementing Technology*, Nova Communications Ltd., New York, 1984.

(10) Creech, John, 1986, "Class I Injection Well Design Considerations Using Fiberglass Tubular and Epoxy Cement," *Proceedings of International Symposium Subsurface Injections of Liquid Wastes*, New Orleans, LA, March 3–5, 1986.

(11) Cole, Robert C., "Epoxy Sealant for Combating Well Corrosion," *International Symposium on Oilfield and Geothermal Chemistry*, SPE of AIME, Houston, 1979.

(12) Jeffries, S. A., "Bentonite-Cement Slurries for Hydraulic Cut-Offs," *Soil Mechanics and Foundation Engineering*, Tenth International Congress, Vol 1, Stockholm, 1981, pp. 435–440.