6235 G-000-705 .108

RINSEATE SAMPLING PLAN AND CLOSURE PLAN APPROVAL FOR THE BARIUM CHLORIDE WASTE SALT TREATMENT FACILITY - FEED MATERIALS PRODUCTION CENTER

01/26/89

DOE-463-89
DOE-FN OEPA
20
LETTER

6235

Department of Energy
Oak Ridge Operations
P.O. Box 2001
Oak Ridge, Tennessee 37831—

January 26, 1989
DOE-463-89

Dr. Richard Shank
Ohio Environmental Protection Agency
1800 WaterMark Drive
Columbus, OH 43266

Dear Dr. Shank:

RINSEATE SAMPLING PLAN AND CLOSURE PLAN APPROVAL FOR THE BARIUM CHLORIDE WASTE SALT TREATMENT FACILITY - FEED MATERIALS PRODUCTION CENTER

Reference: J. A. Reafsnyder to George Hamper, USEPA-5, "Sampling Plan for the Barium Chloride Waste Salt Treatment Unit Rinseates", dated September 30, 1988.

As stated in the referenced letter, we proposed to provide you a revised sampling plan for the rinseates generated during closure of the Barium Chloride Treatment Facility. The revised plan, which incorporates the USEPA request that drinking water standards be used in determining a clean level for rinseates, is attached for your review.

With the submittal of this revised plan, we are still working under the premise that final approval to begin closure of this facility has not been granted by the Environmental Protection Agency. Conditional approval of the closure plan has been received, but was contingent upon the submittal of residue and rinseate sampling plans followed by EPA approval of these plans. Since approval of these sampling plans has never been granted, final unconditional approval of the closure plan is still pending. We request that the Environmental Protection Agency provide a letter granting expressed unconditional written approval to begin closure of this facility. Until we receive the approval letter, we will consider approval of the closure plan as pending. In addition, we will consider the 180 day allowance for completion of closure activities under 40 CFR 265.113(b) to begin with receipt of the closure plan approval letter.

If you have any questions or require additional information, please contact Mary Stone, of my staff, at (513) 738-6656.

Sincerely,

Ray Hansen for

James A. Reafsnyder
Site Manager

DP-84:Stone

Attachment: As stated

cc w/attachment:
G. Mitchell, OEPA/Dayton

cc w/o attachment:
C. McCord, USEPA-5
G. Hamper, USEPA-5
L. C. Bogar, WMCO
R. C. Kispert, WMCO
G. E. Baker, WMCO
P. J. Levine, WMCO

6235

SAMPLING PLAN FOR THE BARIUM CHLORIDE WASTE SALT TREATMENT UNIT RINSEATES

UNITED STATES DEPARTMENT OF ENERGY

FEED MATERIALS PRODUCTION CENTER

FERNALD, OHIO

SEPTEMBER 1988

Prepared by:

Advanced Sciences, Inc.

for

THE WESTINGHOUSE MATERIALS COMPANY OF OHIO

TABLE OF CONTENTS

Section		Page
Preface		1
1.0	Introduction	2
2.0	Objective	5
3.0	Sampling Plan	6
3.1	Statistical Evaluation	8
3.1.1	Waste Classification	8
3.1.2	Number of Samples	12
3.2	Sampling Procedures	17
3.2.1	Sample Collection	17
3.3	Chain-of-Custody	19
3.4	Sample Analysis	23
3.5	Decontamination Procedures	26
3.6	Waste Management	26
3.7	Sampling Equipment	27
3.8	Report of Findings	27
3.9	Health and Safety	28
3.10	Quality Assurance and Quality Control	28

LIST OF FIGURES

Figure No.	Title	Page
1.0	Map of the Barium Chloride Waste Salt Treatment Unit	3
2.0	Barium Stabilization Process Flow Diagram	4
3.0	Chain-of-Custody Form	22
4.0	Sample Label	23
5.0	Request for Analysis Form	25

LIST OF FIGURES

Table No.	Title	Page
1	Regulatory Threshold of Contaminants for Characteristic of EP Toxicity	9
1A	USEPA Threshold of Contaminants for Tanks that will Remain in Use and Floor Sections	9
2	Students 't' Value for Statistical Evaluation	13
3	Summary of Barium Chloride Waste Salt Treatment Unit Tanks and Piping Sections to be Sampled	17
4	Test Methods for Analyzing for EP Toxicity Metals	26

PREFACE

This sampling plan was prepared for the Feed Materials Production Center (FMPC), Fernald, Ohio, as part of the Barium Chloride Waste Salt Treatment Unit Sampling Project. This facility is operated by Westinghouse Materials Company of Ohio (WMCO) for the U.S. Department of Energy (DOE). This sampling effort is not part of the Remedial Investigation/ Feasibility Study (RI/FS) currently being conducted at FMPC. However, existing RI/FS facilities and procedures (sampling plan, quality assurance project plan) are utilized as applicable. The sampling effort is part of the closure of the Barium Chloride Waste Salt Treatment Unit being performed by WMCO. Both this sampling plan and the sampling plan for waste residues must be approved by the Environmental Protection (EPA) Agency prior to being implemented.

1.0 INTRODUCTION

This sampling plan covers collection of rinseate from flushing of the process equipment, four tanks (D-1, D-15, F13A-164, W-10) and the floor sump at the FMPC Barium Chloride Waste Salt Treatment Unit, as well as the sampling and analytical methodology for the rinseate in order to evaluate the decontamination effort for this treatment unit. Figure 1 depicts the layout of the Barium Chloride Waste Salt Treatment Unit. This treatment unit was used to convert barium chloride waste salt, A Resource Conservation and Recovery Act (RCRA) hazardous waste, to Barium Sulfate, a nonhazardous waste. Barium Sulfate is nonsoluble and will pass the extraction procedure (EP) toxicity test for barium, indicating it is safe for land disposal. Operation of the unit was suspended when corrosion problems developed in the unit equipment. The unit is now undergoing closure under the guidelines of 40 Code of Federal Regulations (CFR) 265.110 through 265.120. The closure is being performed by the Westinghouse Materials Company of Ohio.

A previously developed sampling plan (FMPC RI/FS-010) defines how the waste residues in the Treatment Unit tanks D-1, D-15, F13A-164 and W-10 will be sampled and what type of analysis will be conducted. The barium stabilization process flow diagram is depicted in Figure 2. This sampling plan will establish the method for collecting clean water rinseates that have been flushed through the process equipment and tanks after removal of the residues from the tanks. This sampling plan also provides information on the type of contaminants that will be analyzed for after sample collection.

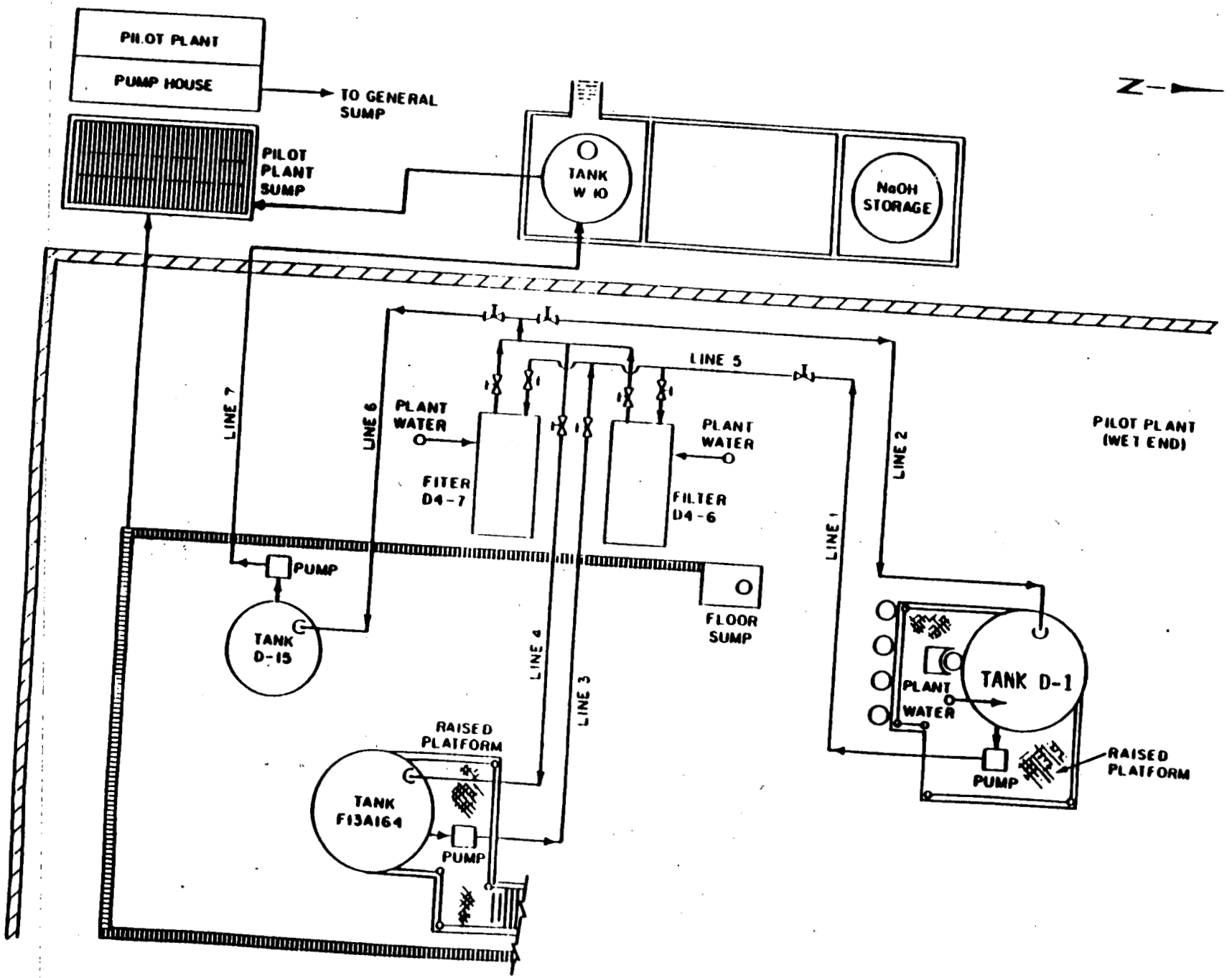

FIGURE 1 MAP OF THE BARIUM CHLORIDE

6235

000009

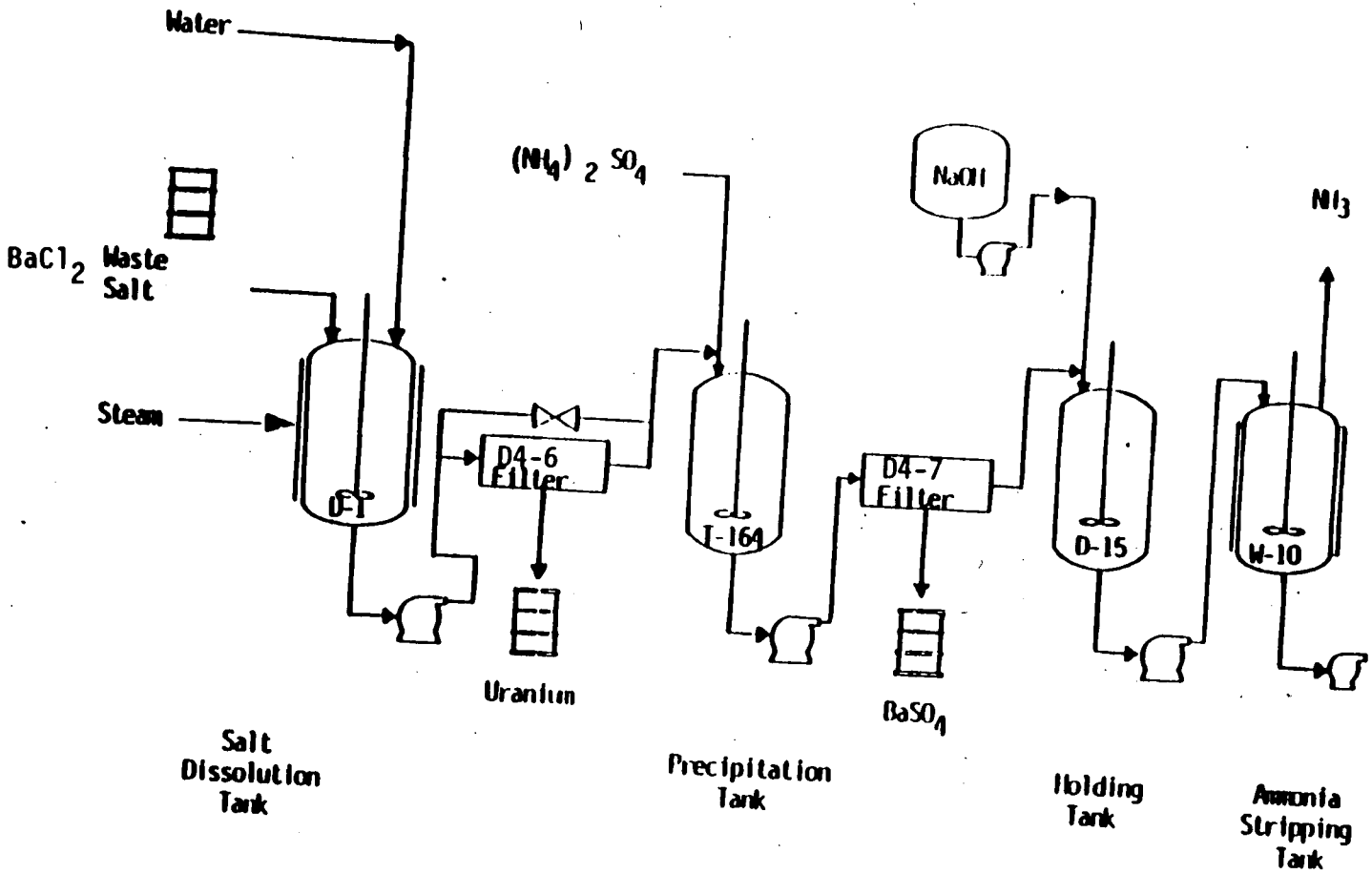

FIGURE 2

BARIUM STABILIZATION PROCESS FLOW DIAGRAM

2.0 OBJECTIVE

The objective of this sampling plan is to sample and analyze rinseates which have been flushed through the tanks and other process equipment and piping after removal of residues from the Barium Chloride Treatment Unit tanks. These sampling and analysis activities will ensure that if hazardous contaminants are present on the inside surface of these items at levels above regulatory limits, the contaminants will be detected and the areas of the system where they are present will be located and properly cleaned prior to closure of the Treatment Unit facility.

3.0 SAMPLING PLAN

The sampling plan section includes the following information:

- Rinsate collection methods for the Treatment Unit tanks and piping.
- Total number of samples to be taken based on the results of sampling of the tank residues and a statistical analysis based on the U.S. EPA Test Methods for Evaluating Solid Wastes (U.S. EPA SW-846, Third Edition).
- Sampling procedures and equipment to be used in obtaining rinseate samples. The procedure will indicate the sections of the process equipment from which the rinseates will be obtained.
- Chain-of-custody procedure.
- Statistical data evaluation procedure.
- Health and safety program description.
- Quality assurance program summary.

The above items will ensure that this evaluation of the FMPC Barium Chloride Waste Salt Treatment Unit will determine whether hazardous contaminants remain in the process tanks, piping, equipment, and sump at levels above regulatory limits. If sources of high contamination are detected and located, these areas will receive additional cleaning. The following sampling plan and statistical data evaluation procedures were developed to classify the rinseates from Tanks D-1, D-15, F13A-164, W-10, the floor sump, and process equipment with a specified degree of confidence to ensure that contamination levels are accurately determined and appropriate steps can be followed in the closure of the facility.

Rinseates will be generated by washing down the sides of the four tanks or flushing through piping and equipment (where possible). All rinseates will be collected in each of the tanks either by washing the inside tank walls or backflushing piping rinseates into the tanks. All samples will then be taken from inside each of the four tanks unless piping configuration or other physical considerations will not allow for this.

The floor underneath the facility will be divided into two areas. Each area will be washed down with clear water independently. The rinseate will be collected in the floor sump and samples will be drawn from the sump. This will be the method used for determining if hazardous constituents are present on floor sections and if the floor sections must be handled as hazardous waste.

In developing the sampling plan and data evaluation scheme that follows, it is assumed that agitiation will be provided to give homogeneous rinseate samples. It is expected that samples will contain both liquids and particulates. Scale from the sides of tanks and inside surfaces of piping will be present in the rinseates and will be included with samples. This will ensure that any hazardous substances that may be absorbed in these solid materials will be included for analysis. Based on operation and inspection of the facility, it is expected that the wastes are homogeneous and the samples can be assumed to be representative of the entire sump.

3.1 STATISTICAL EVALUATION

The following subsections present statistical procedures to determine whether hazardous contaminants are present on the inside surface of tanks, process equipment and piping as well as surface of the floor sections at levels above the regulatory limits with a specified degree of confidence, and to determine the quantity of samples required to support this confidence level. These procedures are those described in U.S. EPA SW-846.

3.1.1 Waste Classification

According to the EP toxicity procedure, if an extract of the sample (or the filtrate if the sample contains less that 0.5 percent filterable solids) contains any of the contaminants listed in 40 CFR 261.25 at levels equal to or greater than the regulatory threshold, then the sample is EP toxic and is a hazardous waste as defined by 40 CFR 261.3. A list of the EP toxicity thresholds for metals is provided in Table 1. A second list of data is provided in Table 1A which shows an acceptable level of contaminant that is one hundred times more stringent than in Table 1. These levels are drinking water standards and will be used as designated clean levels for tanks that will be reused in future operations. If a tank will be reused in the future, it will be decontaminated until the rinseate analysis is below the level specified in Table 1A. In addition, floor sections will not be considered decontaminated until rinseate samples meet the contaminant levels specified in Table 1A.

TABLE 1

Regulatory Threshold of Contaminants For Characterization of EP Toxicity[1]

Contaminant	Maximum Concentration (mg/l)
Arsenic	5.0
Barium	100.0
Cadmium	1.0
Chromium	5.0
Lead	5.0
Mercury	0.2
Selenium	1.0
Silver	5.0

[1] From 40 CFR 261.24

TABLE 1A

USEPA Rinseate Threshold of Contaminants for Tanks that Will Remain In Use and Floor Sections

Contaminant	Maximum Concentration (mg/l)
Arsenic	0.05
Barium	1.0
Cadmium	0.01
Chromium	0.05
Lead	0.05
Mercury	0.002
Selenium	0.01
Silver	0.05

In addition to these criteria, according to 40 CFR 264.4(b)(6), wastes that fail the EP toxicity test only for chromium may be excluded as hazardous wastes if:

- The chromium in the waste is exclusively (or nearly exclusively) trivalent chromium; and
- The waste is generated from an industrial process that used trivalent chromium exclusively (or nearly exclusively) trivalent chromium; and
- The waste is typically and frequently managed in non-oxidizing environments.

In any sampling effort, some indication of the degree of sampling precision and accuracy is required. Based on EPA Test Methods for Evaluating Solid Wastes (SW-846), it is recommended that a confidence interval (CI) of 95 percent be used for evaluating whether hazardous contaminants present are at levels above regulatory limits. For a given contaminant, the upper limit of the 95 percent confidence interval is compared to the regulatory threshold (RT) to determine the regulatory classification of the waste. If the upper limit of the 95 percent CI exceeds the regulatory threshold, the rinseate is classified as a hazardous waste in the case of Table 1, or the tank is determined not to be reused in the case of Table 1A. It is important to note that even if the upper limit of the 95 percent CI is only slightly less than the regulatory threshold, there is only a 2.5 percent (not 5 percent) chance of incorrectly classifying the waste as nonhazardous. This is due to the two-tailed characteristic of the CI curve. A 2.5 percent error is possible at the lower and upper limit of the CI curve for a total of 5 percent possible error. Only the upper limit of the CI curve is near the regulatory threshold and so there is only a 2.5 percent chance of incorrect classification.

The confidence interval (CI) is calculated as follows:

$$CI = \pm t_{.05} s_x$$

where:

CT	=	confidence interval,
x	=	mean concentration,
$t_{.05}$	=	Student's 't' value for 95% (two-tailed) confidence interval,
s_x	=	Standard error of the mean.

The standard error of the mean is computed as follows:

$$s_x = s/n$$

$$s^2 = \frac{\sum_{i=1}^{n} x_i^2 - (\sum_{i=1}^{n} x_i)^2/n}{n - 1}$$

where:

s = Standard deviation of the sample,

x_i = individual concentration measurements,

n = number of samples

Table 2 presents a list of students 't' values for the 95 percent confidence interval.

3.1.2 Number of Samples

The appropriate number of samples (n) to be collected is normally determined using the following expression:

$$n = \frac{(t_{.05})^2 \; s^2}{(RT - x)^2}$$

where:

n = appropriate number of samples

x = mean concentration

$t_{.05}$ = Student's 't' value for 95% (two-tailed) confidence interval,

RT = regulatory threshold,

s = standard deviation of the sample.

Use of this procedure requires a preliminary estimate of the mean (x) and the standard deviation (s). As was the case with the sampling of the residues, no preliminary data are available, in this case concerning the concentration of contaminants in the rinseates. However, at the time when rinseate samples are collected, information will be available

TABLE 2

Student's 'T' Value For Statistical Evaluation[1]

Number of Samples (n)	't' Value (95% CI)
2	12.706
3	4.303
4	3.182
5	2.776
6	2.571
7	2.447
8	2.365
9	2.306
10	2.262

[1] Two-tailed Student's 't' data.

concerning the concentrations of contaminants in the residues from the original sampling effort. This information will give an indication as to whether there are likely to be significant quantities of hazardous contaminants present in the piping and equipment rinseates which would exceed regulatory thresholds. Since the preliminary data do not exist at the time this sampling plan is being written, a judgment has been made to provide three different sampling plans. The number of samples to be collected in each plan is based on present knowledge of the materials now in the Treatment unit tanks and sump and provides for low, medium, and high levels of contamination which will be indicated by the results of the residue sampling. In the sampling schemes outlined below the number of samples to be taken from each sampling source will be 9, with a breakdown as follows: 3 from each sampling source for laboratory analysis, 1 from each sampling source for use by WMCO, and 5 additional samples from each source for subsequent confirmatory analysis or use in Plan C to achieve better statistical condfidence by analyzing along with the 3 initial samples. The three sampling schemes are outlined below and the piping sections and equpimnet referred to are labeled in Figure 1 and described in Table 3.

Sampling Plan A

If results of the residue sampling indicate conclusively that residue materials contain hazardous levels of contaminants, samples will be taken as follows:

Sample Source	Number of Samples Analyzed	Total Samples Taken
Tank D-1	3	9
Line 1	3	9
Line 2	3	9
Line 3	3	9
Line 4	3	9
Tank F13A-164	3	9
Tank D-15	3	9
Line 6	3	9
Line 7	3	9
Tank W-10	3	9
Floor Sump	3	9
Total	33	99

Sampling Plan B

If results of the residue sampling indicate conclusively that residue materials can be considered non-hazardous, samples will be taken as follows:

Sample Source	Number of Samples Analyzed	Total Samples Taken
Tank D-1 & Lines 1 and 2	3	9
Tank F13A-164 & Lines 3 and 4	3	9
Tank D-15 & Lines 6 and 7	3	9
Tank W-10	3	9
Floor Sump	3	18
Total	15	54

Sampling Plan C

If results of sampling and analysis indicate that the average concentration of contaminants is less than hazardous threshold values, but the confidence interval is not, then sampling will be conducted as follows:

Sample Source	Number of Samples Analyzed	Total Samples Taken
Tank D-1	3	9
Line 1	3	9
Line 2	3	9
Line 3	3	9
Line 4	3	9
Tank F13A-164	3	9
Tank D-15	3	9
Lines 6 and 7	3	9
Tank W-10	3	9
Floor Sump	3	18
Total	30	99

000022

TABLE 3

Summary of Barium Chloride Waste Salt Treatment Unit Tanks and Piping Sections to be Sampled

System Component	Description	Contaminant Previously Handled
Tank D-1	1069 gal capacity, Salt solution tank	barium chloride
Line 1	1-1/2 inch pipe, from Tank D-1 to filters	barium chloride
Line 2	1-1/2 inch pipe, return to D-1 from filters	barium chloride
Tank F13A-164	2124 gal capacity, Precipitation tank	barium chloride barium sulfate
Line 3	1-1/2 inch pipe to filters from Precipitation tank	barium sulfate
Line 4	1-1/2 inch pipe from filters to precipitation tank	barium chloride barium sulfate
Line 5	1-1/2 inch manifold piping between filters	barium chloride barium sulfate
Tank D-15	720 gal capacity, Holding tank for filtrate liquids	Dilute conc. of barium sulfate
Tank W-10	2200 gal capacity, Filtrate receiving tank	Same
Line 6	1-1/2 inch pipe, inlet to holding tank D-15	Same
Line 7	1-1/2 inch pipe, discharge from tank D-15	Same
Floor Sump	Undetermined	Same

3.2 Sampling Procedures

3.2.1 Sample Collection

Sampling methods to be implementated for collection of samples from the three tanks are those outlined in U.S. EPA SW-846.

Rinseates in the tanks may be stratified, or otherwise require agitiation before sample collection in order to obtain representative samples. Mixing will be accomplished using an air sparger. The tanks and sumps will be sampled using one or four devices:

- a containerized liquid waste sampler (COLIWASA),
- A bailer,
- A weighted bottle, or
- A pump.

The task Manager will choose the sampling devices based on the volume of rinseate fluid necessary to flush the various sample source locations. Below are descriptions of the above methods and applicable situations for their use.

The COLIWASA consists of a plastic tube which is equipped with a stopper that can be opened and closed while submerged. The sample is collected by carefully lowering the COLIWASA into the tank. When the sampler reaches the tank bottom, the T-handle on the COLIWASA is closed to seal the sample collection tube. Because of the depth of the tanks (8 to 15 feet), specifically constructed, long-handled COLIWASA's will be required. The samples will be placed in 500-ml, wide-mouth plastic sample bottles.

000024

An alternate procedure would use a bailer instead of a COLIWASA. The bailer consists of a length of plastic pipe, with a check valve in the base. The bailer is lowered into the tank using a retrieval line. Liquid enters the bailer through the check valve in the plastic pipe. As the bailer is lifted, the check valve closes, collecting the sample. The bailer is easily used and is the preferred sampling device for this situation. The samples will be containerized in 500-ml, wide-mouth plastic bottles.

A weighted bottle sampler consists of a weighted plastic bottle attached to a retrieval line. A clean bottle will be used for each sample, avoiding sampler decontamination problems between samples. Samples collected using a bailer will be withdrawn and transferred into a 500-ml wide-mouth plastic sample bottle.

Samples will be acidiified to a pH less than 2 with nitric acid. Prior to acidification, a pH determination for each sample will be made using a portable pH meter. A custody seal will be placed over the lid of all samples. The sample will immediately be placed in a cooler and cooled to 4°C with blue ice.

3.3 Chain-of-Custody

A formal chain-of-custody procedure will be implemented for all samples collected. A sample is defined as being "in custody" when:

- It is in the physical possession of the designated responsible party,
- It is in view of the designated responsible party,
- It is placed in a secure area by the designated responsible party, or
- It is in a secure area restricted to access by authorized personnel only.

The chain-of-custody documentation provides the ability to trace the possession and handling of the samples from time of collection through analysis and final disposition. Chain-of-custody is required for all regulatory sampling. A sample chain-of-custody is shown in Figure 3.

Each sample will be assigned a unique sample number. Samples will identified using a three character project identifier (BCT for Barium Chloride Tanks, a three character identifier (D01, D15, W10, SMP, LN1, LN2, etc.), and a two digit unique, consecutive number. For example, at Tank D1, the first sample collected would be BCT-D01-01. Each sample will be labeled using a sample label as shown in Figure 4.

000026

A field logbook will be maintained containing the following minimum information for each sample collected:

- Date and time of sample collection
- Initials of field technicians
- Sample location
- Sample number
- Sampler preservatives
- Site specific observations
- pH of sample prior to acidification

The on-site RI/FS sample coordinator will serve as the sample custodian to receive the samples after collection, maintain the samples in a secured refrigerated environment, and ship the samples to the laboratory. Existing FMPC RI/FS sample packaging and shipping procedures shall be followed.

In order to assure proper handling, the following information will accompany each sample:

- Request for analysis form
- Purchase order information
- Hazard identification
- Name and address of person to receive report.

A sample Request for analysis form is shown in Figure 5. Unused sample portions and archived samples will be maintained by the laboratory in unrefrigerated storage until notified in writing to return the samples to the site for disposal.

FERNALD RI/FS

CHAIN OF CUSTODY RECORD

R/A Control No. _____

C/C Control No.

PROJECT NAME/NUMBER _____

SAMPLE TEAM MEMBERS _____

LAB DESTINATION _____

CARRIER/WAYBILL NO. _____

Sample Number	Sample Location and Description	Date and Time Collected	Sample Type	Container Type	Condition on Receipt (Name and Date)	Disposal Record (If)

Special Instructions: _____

Possible Sample Hazards: _____

SIGNATURES: (Name, Company, Date and Time)

1. Relinquished By: _____

   Received By: _____

2. Relinquished By: _____

   Received By: _____

3. Relinquished By: _____

   Received by: _____

4. Relinquished By: _____

   Received By: _____

WHITE - To accompany samples
YELLOW - Field copy

FIGURE 3

FERNALD RI/FS 23-8-85

Project Name _____ Project No. _____

Sample Location _____ Number _____

Boring/Well No. _____ Date _____

Collector's Name _____ Time _____

Sample Type: ____ Ground Water ____ Surface Water

____ Soil ____ Sludge/Waste

Parameters _____ Preservative _____

Bottle _____ of _____ ____ Filtered ____ Nonfiltered

FIGURE 4

The archived samples and unused sample portions will be returned to the FMPC Plant 1 Supervisor. If notification to return the samples is not received by January 1, 1992, the contracting officer will be notified of the need to extend this storage period and to renegotiate storage terms.

3.4 SAMPLE ANALYSIS

The tank samples will be analyzed for RCRA metals including arsenic, barium, cadmium, chromium, lead, mercury, selenium, and silver. Table 4 lists the specific EPA test methods from SW-846 to be used for analyzing the samples, the detection limits of those methods, and the allowable sample holding times.

The samples will be submitted to the IT Radiological Sciences Laboratory, at the following address:

IT Radiological Sciences Laboratory
ATTN: Jim Harvey
1550 Bear Creek Road
Oak Ridge, TN 37830

Sample analysis results are to be returned to:

Advanced Sciences, Incorporated
ATTN: L. Murphy
10845 S.R. 128
P.O. Box 475
Ross, Ohio 45061

000030

FERNALD RI/FS

REQUEST FOR ANALYSIS

PROJECT NAME _____

PROJECT NUMBER _____

PROJECT MANAGER _____

BILL TO _____

PURCHASE ORDER NO. _____

DATE SAMPLES SHIPPED _____

LAB DESTINATION _____

LABORATORY CONTACT _____

SEND LAB REPORT TO _____

DATE REPORT REQUIRED _____

PROJECT CONTACT _____

PROJECT CONTACT PHONE NO. _____

R/A Control No. _____

C/C Control No. _____

Sample No	Sample Type	Sample Volume	Preservative	Requested Testing Program	Special Instructions

TURNAROUND TIME REQUIRED: (Rush must be approved by the Project Manager.)

Normal _____ Rush _____ (Subject to rush surcharge)

POSSIBLE HAZARD IDENTIFICATION: (Please indicate if sample(s) are hazardous materials and/or suspected to contain high levels of hazardous substances)

Nonhazard _____ Flammable _____ Skin Irritant _____ Highly Toxic _____ Other _____ (Please Specify)

SAMPLE DISPOSAL: (Please indicate disposition of sample following analysis. Lab will charge for packing, shipping, and disposal)

Return to Client _____ Disposed by Lab _____

FOR LAB USE ONLY

Received By _____

Date/Time _____

WHITE - Original, to accompany samples
YELLOW - Field copy

FIGURE 5

TABLE 4

Test Methods For Analyzing For EP Toxicity Metals

Parameter/Item	Method[1]	Holding/Time
EP Toxicity (for solid residue only)	1310	----
Acid Digestion (for solid residue only)	3010	----
Arsenic	6010	6 mo.
Barium	6010	6 mo.
Cadium	6010	6 mo.
Total Chromium	6010	6 mo.
Hexavalent Chromium	7196	24 hrs.
Lead	6010	6 mo.
Mercury	7470	28 days
Selenium	6010	6 mo.
Silver	6010	6 mo.

1 Alternate test methods may be identified if interferences occur with the specified method. Additional test methods, not identified here, may be required to detect the regulatory thresholds specified in Table 1A.

3.5 DECONTAMINATION PROCEDURES

The sampling devices and air sparger will be decontaminated before use and between samples. The sampling devices will be cleaned with a nonphosphate detergent and rinsed with tap water and deionized water. A single rinseate sample will be collected and archived from the final deionized water rinse to verify decontamination. If the weighted bottle sampler is used, a clean sample bottle will be used to collect each sample.

If tank W-10 is sampled by pumping, new tubing will be used for each sample and decontamination is not required.

3.6 WASTE MANAGEMENT

Waste materials generated by the sampling activities will be disposed according to the existing WMCO and RI/FS procedures. This waste may include, but is not limited to, plastic ground cloths, disposable protective clothing, retrieval lines, disposable toweling, and plastic tubing. Unless preliminary radiological information to be supplied by WMCO indicates the tanks to be sampled are not uncontaminated, all wastes generated during sampling will be assumed contaminated; therefore, they will be disposed of in yellow radiological waste trash bags. WMCO plant personnel will be contacted for disposal of the trash bags.

Waste decontamination fluids will be containerized in 55-gallon drums and disposed according to existing RI/FS procedures.

3.7 SAMPLING EQUIPMENT

The following sampling equipment is required:

Name	Quantity
Bailers	10
Weighted bottle samplers (optional)	1
COLIWASA (optional)	3
Portable pump (if required)	1
Tygon tubing (if required)	2 5
LF500-ml polyethylene sample bottles (wide mouth)	100
Nitric acid w/dispenser	1000 ml
Nonphosphate detergent	approx. 100 g
Deionized water	20 gal.
Sample bottles	150
Plastic ground cloths	3
Sample labels	150
Retrieval line	75 LF

3.8 REPORT OF FINDINGS

A report of findings, including the laboratory analysis data and the assessment of contaminant levels, will be prepared and submitted to WMCO. This report will include the following information:

- The total number of samples taken
- The location of each sample taken
- The date and time each sample was obtained
- The type of analysis performed on each sample
- The concentration of each metal in each sample
- The results of statistical analysis for data evaluation and identification of waste residues which must be handled as hazardous waste, or recommendations for further testing before a hazardous designation can be made.

3.9 HEALTH AND SAFETY

The sampling of the barium chloride tanks will be performed under the provisions of the RI/FS Health and Safety Plan of March 3, 1988 (Revision 3), including the Health and Safety Addendum. Based on the information available at this time, the following protective equipment will be used for tank sampling:

- Cotton coveralls (WMCO issue)
- Safety boots (WMCO issue)
- Nitrile gloves
- Safety glasses
- Boot covers
- Saranex coveralls

Modifications to the protective equipment for sampling will depend on information supplied by WMCO and on-site evaluation and assessment of risk.

In addition, radioactivity levels to be supplied by WMCO will be used to determine if the samples can be analyzed at IT's Mixed Waste Laboratory. Additional screening may be required on the samples before shipment to the laboratory to further categorize the samples according to the level of hazard.

3.10 QUALITY ASSURANCE AND QUALITY CONTROL

Quality Assurance (QA) and Quality Control (QC) procedures from the RI/FS shall be implemented during this sampling program. These procedures are defined in the "Quality Assurance Project Plan for the Remedial Investigation and Feasibility Study" (Revision 3, dated March 3, 1988).