6284 U-003-307 .27

DIEHL, A. R. & POFF, T. A., FEED MATERIALS PRODUCTION CENTER RADIOACTIVE WASTE MANAGEMENT PLAN - REVISION 5, - (USED AS A REFERENCE IN THE OU1 RI)

03/19/84

NLCO-1100
NLO DOE-FN
50
REPORT

FEED MATERIALS PRODUCTION CENTER
RADIOACTIVE WASTE MANAGEMENT PLAN

by

D. E. Diehl/T. A. Poff

Revised
March 19, 1984

NLO, Inc.
P. O. Box 39158
Cincinnati, Ohio 45239

Prepared for:

U. S. Department of Energy
Weapons Division of Oak Ridge Operations
Contract DE-AC05-76OR01156

APPROVED:

N. R. Leist
Director, Engineering Div.

APPROVED:

R. M. Spencelay
Manager

Distribution:

M. W. Boback
C. E. Block
J. A. Coobes (ORNL)
D. E. Diehl
J. Farr
C. H. Handel
J. H. Harrison
D. E. Large (ORO)
N. R. Leist
L. Pennington
T. A. Poff
T. H. Row (ORNL)
R. M. Spenceley
M. R. Theisen (ORO)
L. C. Williams (ORNL)
Library (4)
File

NOTICE

This report was prepared as an account of work sponsored by an agency of the United States Government. Neither the United States Government nor any agency thereof, nor any of their employees, nor any of its contractors, subcontractors nor their employees, makes any warranty, express or implied, or assumes any legal liability or responsibility for the accuracy, completeness, or usefulness of any information, apparatus, product, or process disclosed, or represents that its use would not infringe privately owned rights. Reference herein to any specific commercial product, process, or service by trade name, trademark, manufacturer, or otherwise, does not necessarily constitute or imply its endorsement, recommendation, or favoring by the United States Government or any agency thereof. The views and opinions of authors expressed herein do not necessarily state or reflect those of the United States Government or any agency thereof.

FMPC WASTE MANAGEMENT PLAN

TABLE OF CONTENTS

Introduction 1

1.0 Program Administration 1

1.1 Site 1
1.2 Responsible DOE Area Office 1
1.3 DOE Contractors 3
1.4 Responsible DOE Staff Member 3
1.5 Funding of Waste Management Activities 3
1.6 Status of Compliance with DOE 5820 Requirements 3

2.0 Description of Waste Generating Processes 4

2.1 Waste Process Flow Charts 4
2.2 Radiological and Chemical Characteristics of Wastes 6

3.0 Waste Management Facilities 6

3.1 Identification and Location of Facilities 6
3.2 Description of Waste Treatment Facilities 7

3.2.1 Solid Wastes 7
3.2.2 Liquid Wastes 7

3.2.2.1 Process Waste 11

3.2.2.1.1 Plant Treatment Facilities 11
3.2.2.1.2 General Sump 11
3.2.2.1.3 Plant 8 14
3.2.2.1.4 Chemical Waste Pit No. 5 14

3.2.2.2 Sanitary Sewage 15
3.2.2.3 Storm Water 15

3.3 Waste Storage Facilities 15

3.3.1 K-65 and Metal Oxide Tanks 15
3.3.2 Chemical Waste Pits 18

3.4 Description of Surplus Facilities 18

3.4.1 Description of Decontamination and Decommissioning Radioactive Contaminated Facilities 18

3.5 Effluent Control System 19

FMPC WASTE MANAGEMENT PLAN

TABLE OF CONTENTS (cont'd)

3.5.1 Liquid Waste Control 19

3.5.1.1 Combined Sewers 19
3.5.1.2 Storm Sewer 19

3.5.2 Airborne Radioactive Wastes 20

3.6 Site Administrative Limits for Radioactivity in Effluents . . 20

4.0 Radioactive Wastes Stored 21

4.1 High-level Waste 21
4.2 Solid Radioactive Waste 21
4.3 Other Radioactive Wastes 22

4.3.1 K-65 Tanks 22
4.3.2 Metal Oxide Tanks 24
4.3.3 Chemical Waste Pits 24

5.0 Schedules and Major Milestones for Waste Management Activities . . 25

5.1 Management of Low-Level Liquid Wastes 25
5.2 Management of Low-Level Solid Wastes 29

5.2.1 Interim Operations 31
5.2.2 Low-Level Waste Processing System 32
5.2.3 Magnesium Fluoride Conversion 34
5.2.4 K-65 Residues 34
5.2.5 Management of Mixed Hazardous Waste 34
5.2.6 Low-Term Waste Management and Remedial Action Planning. 35

5.2.6.1 Pit Mining 35
5.2.6.1 Removal of Material Storage Towers, South of Plant 1 36

5.2.7 Contaminated Metal Scrap 37

5.2.7.1 Ferrous Scrap 37
5.2.7.2 Copper Scrap 38

5.3 Management of Airborne Radioactive Waste 39

6.0 Quality Assurance and Quality Control 39

6.1 Quality Assurance (QA) 39
6.2 Manufacturing Standards 41
6.3 Product and Process Audits 41

FMPC WASTE MANAGEMENT PLAN

TABLE OF CONTENTS (cont'd)

7.0 Environmental Monitoring Programs 41

7.1 Water Monitoring 41
7.2 Air Monitoring 43
7.3 Groundwater Monitoring 48

8.0 Radioactive Waste Documentation Systems 48

FMPC WASTE MANAGEMENT PLAN

TABLE OF CONTENTS (cont'd)

FIGURES AND TABLES

Fig. 1	Area Map Showing Relative Locations	2
Fig. 2	Schematic Diagram of the FMPC Process	5
Fig. 3	Waste Treatment and Storage Locations	8
Fig. 4	Production Area Waste Treatment Locations	9
Fig. 5	FMPC Waste Flows	10
Fig. 6	General Sump Flow Diagram	12
Fig. 7	FMPC Waste Storage Facility Layout	16
Table I	FMPC Waste Storage Facility Status	17
Table II	Solid Waste Information Management System (SWIMS)	23
Fig. 8	Milestone Chart for FMPC Waste Management	26
Table III	Summary of Costs for Waste Management Projects	27
Fig. 9	Flowsheet - Integrated Water Pollution Control System	28
Fig. 10	Functional Flow for FMPC Low-Level Waste Processing System	33
Fig. 11	FMPC and Surrounding Areas	42
Fig. 12	Waste Water Quality Report: NPDES Permit Parameters	44-47
Fig. 13	Test Well Locations	49

INTRODUCTION

This document presents the site waste management plan of the Feed Materials Production Center. It sets forth the site plans for controlling releases of radioactivity and ensuring the safe storage of radioactive wastes generated by past, present and future site operations.

1.0 Program Administration

1.1 Site

The Feed Materials Production Center (FMPC) is located near Fernald in the Great Miami River Valley in southwestern Ohio, approximately 10 miles northwest of Cincinnati.

The plant proper occupies 136 acres in the center of a 1,050 acre site. Most of the site, including all of the production plant area, is located within Hamilton County, Ohio, but approximately 200 acres are in southern Butler County. The villages of Fernald, New Baltimore, Ross, and Shandon are all located within a few miles of the plant. Hamilton, Ohio, is approximately 10 miles northeast.

Figure 1 shows the relative location of these populated areas to the FMPC.

1.2 Responsible DOE Area Office

Oak Ridge Operations Office

6284

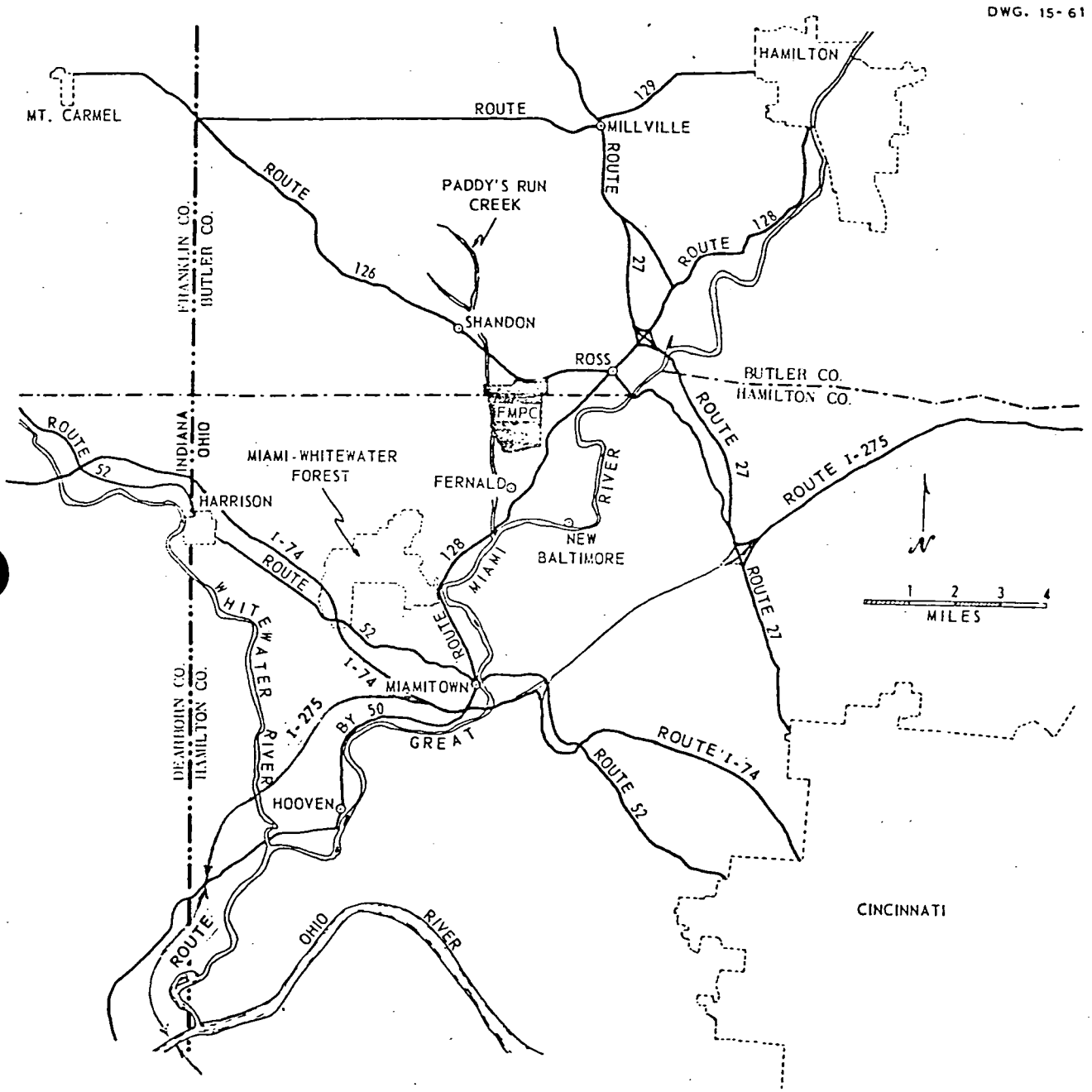

FIGURE 1 Area Map Showing Relative Locations

1.3 DOE Contractors

NLO, Inc., under Contract No. DE-AC05-76OR01156, is responsible for all operations, including waste management activities, at FMPC. Responsibility for coordination of activities related to waste management has now been consolidated under a new Waste Management Department.

1.4 Responsible DOE Staff Members

M. R. Theisen, Director, Weapons Division, ORO
J. A. Lenhard, Assistant Manager, Energy Research and Development

1.5 Funding of Waste Management Activities

Waste management activities at FMPC are currently funded with all other operations under the control of the Weapons Division, Oak Ridge Operations Office. Beginning in FY 1985 Waste Management will be funded under the Office of Waste Management.

1.6 Status of Compliance with DOE 5820

Proposed plans for off-site shipment and disposal of FMPC generated low-level wastes at the Nevada Test Site LLW Disposal Facility are consistent with DOE Low-Level Waste Management policy set forth in DOE Order 5820, Chapter 3.

No natural soil columns have ever been used for disposal of low-level waste at the FMPC. Inventories of waste materials currently on site are considered to be in long-term storage rather than permanent disposal. Long-range plans call for eventual removal of the stored material for final disposal in compliance with the requirments of DOE 5820.

2.0 Description of Waste Generating Processes

2.1 Waste Process Flow Charts

A flow chart of the FMPC production processes and the major waste streams is shown in Figure 2.

The primary work at the FMPC is the production of purified uranium metal and compounds for use at other DOE sites. In regard to Uranium-235 content, the uranium may be depleted, normal, or slightly enriched. The average content is close to normal.

Uranium production may begin with ore concentrates, recycled uranium from spent reactor fuel, or with various uranium compounds. Impure starting material is dissolved in nitric acid and the uranium is extracted into an organic liquid and then back-extracted into dilute nitric acid to yield a solution of uranyl nitrate.

Evaporation and heating convert the nitrate solution to uranium trioxide (UO_3) powder. This compound is reduced to uranium dioxide (UO_2) with hydrogen and then converted to uranium tetrafluoride (UF_4) by reaction with anhydrous hydrogen fluoride. Uranium metal is produced by reacting UF_4 and magnesium metal in a refractory-lined reduction vessel. This primary uranium metal is then remelted with scrap uranium metal to yield a purified uranium ingot which is extruded to form rods or tubes. Sections are then cut and machined to final dimensions. These machined cores are shipped to other DOE sites for canning and final assembly into reactor fuel elements.

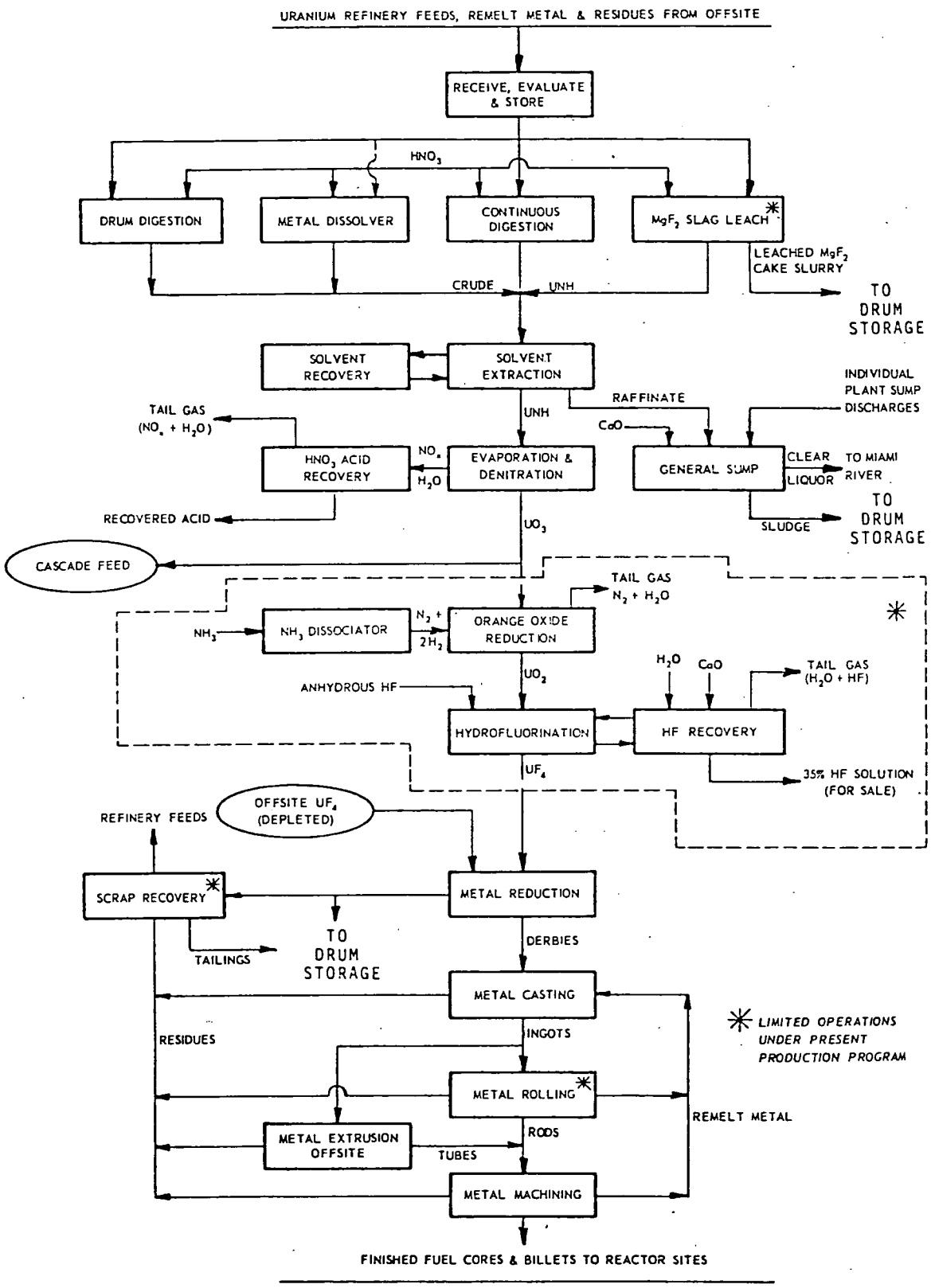

FIGURE 2 Schematic Diagram of the FMPC Process

Periodically, small amounts of thorium are processed. No thorium processing has occurred recently. Thorium production steps, in general, are similar to those followed in uranium production. Final products may be purified thorium nitrate solution, solid thorium compounds, or metal.

2.2 Radiological and Chemical Characteristics of Wastes

Low-level radioactive wastes generated at the FMPC include wet filter cakes, sludges, neutralized raffinates, dry slag, ashes, metallic uranium fines, oxides, and miscellaneous contaminated trash. The chemical composition of the wastes is quite varied, but major components are metal oxides and nitrates of copper, aluminum and iron; calcium oxide; free uranium and uranium in various oxidation states; magnesium fluoride; and traces of free magnesium.

The uranium content of the various waste streams varies from about 0.0005 grams U/gram of solids in the neutralized refinery raffinate and slag leach filter cake to 80-100% U in discarded metal and oxides. The percent enrichment in ^{235}U is 0.2% to 1.1% in the contaminated waste materials.

More complete descriptions of the waste characteristics can be found in a report,"Waste Characteristics and Quantities - Low-Level Waste Processing and Storage System - FMPC," prepared for U.S. DOE by NLO, Inc.

3.0 Waste Management Facilities

3.1 Identification and Location of Facilities

The location of waste treatment and waste storage facilities at FMPC

is shown in Figure 3. Figure 4 is a plan of the production area, an aid in locating various production plants and waste treatment facilities within the area.

3.2 Description of Waste Treatment Facilities

Solid and liquid radioactive wastes are generated at FMPC. The facilities for handling the wastes are discussed below.

3.2.1. Solid Wastes

Noncombustible solid wastes generated at FMPC are discarded without treatment to a storage pit. The uranium content of these wastes is regarded as below economic recovery levels.

Contaminated combustible residues, sewage sludge, graphite, and oils are treated as process residues and incinerated in various facilities. The uranium values are recovered from the generated ash in the Recovery Plant or the Refinery.

Filter cakes, from Plant 8, resulting from the filtration of raffinates and sludges accumulated in General Sump tanks, are now stored in drums awaiting processing for off-site disposal.

3.2.2 Liquid Wastes

Liquid wastes are generated to some degree in every operation at FMPC. The three branches of the liquid waste stream are: process waste, sanitary sewage, and storm water. The system to control the discharge of radioactive wastes to the environment through any of the branches of the liquid waste system is shown in Figure 5.

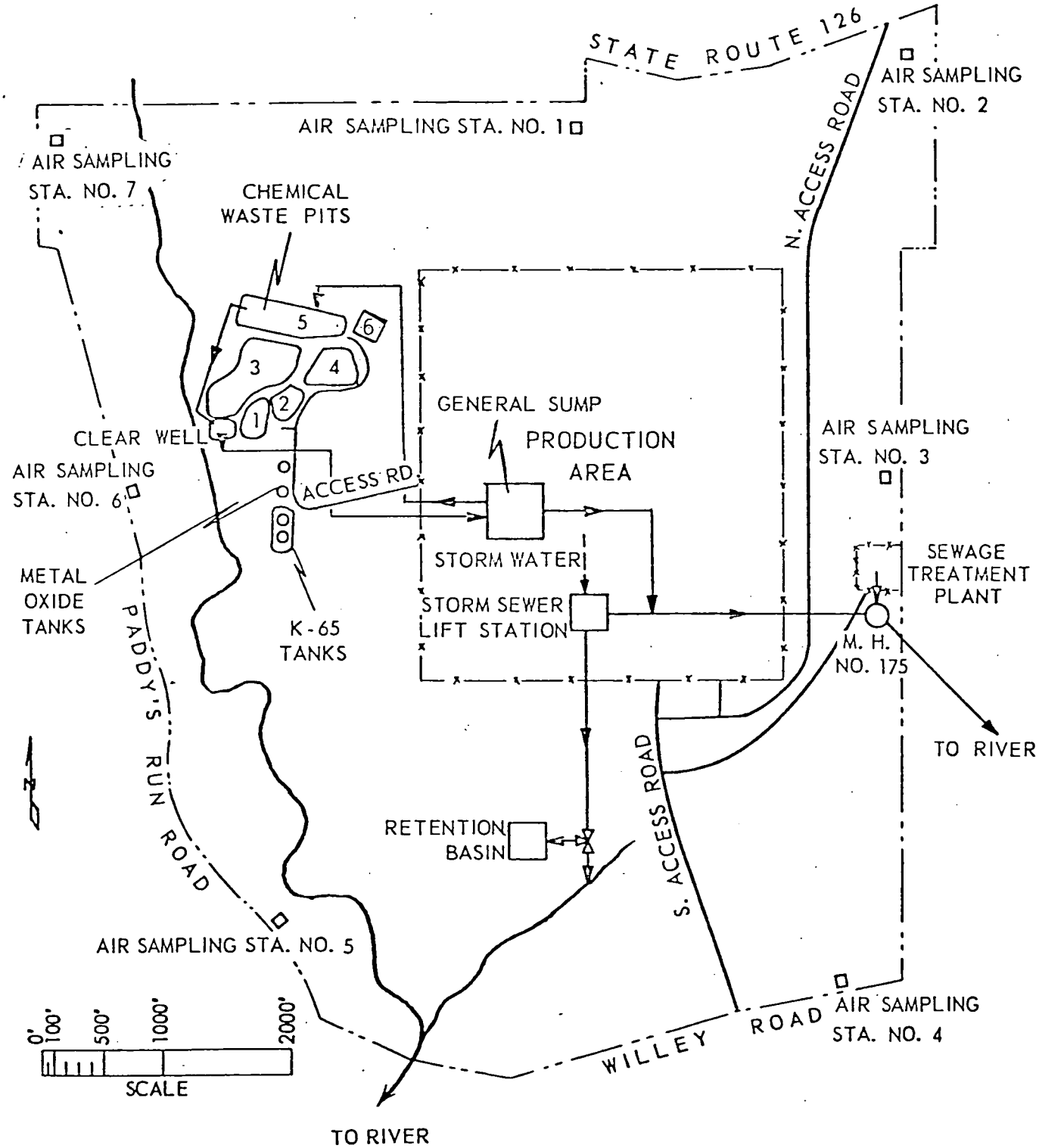

FIGURE 3 Waste Treatment and Storage Locations

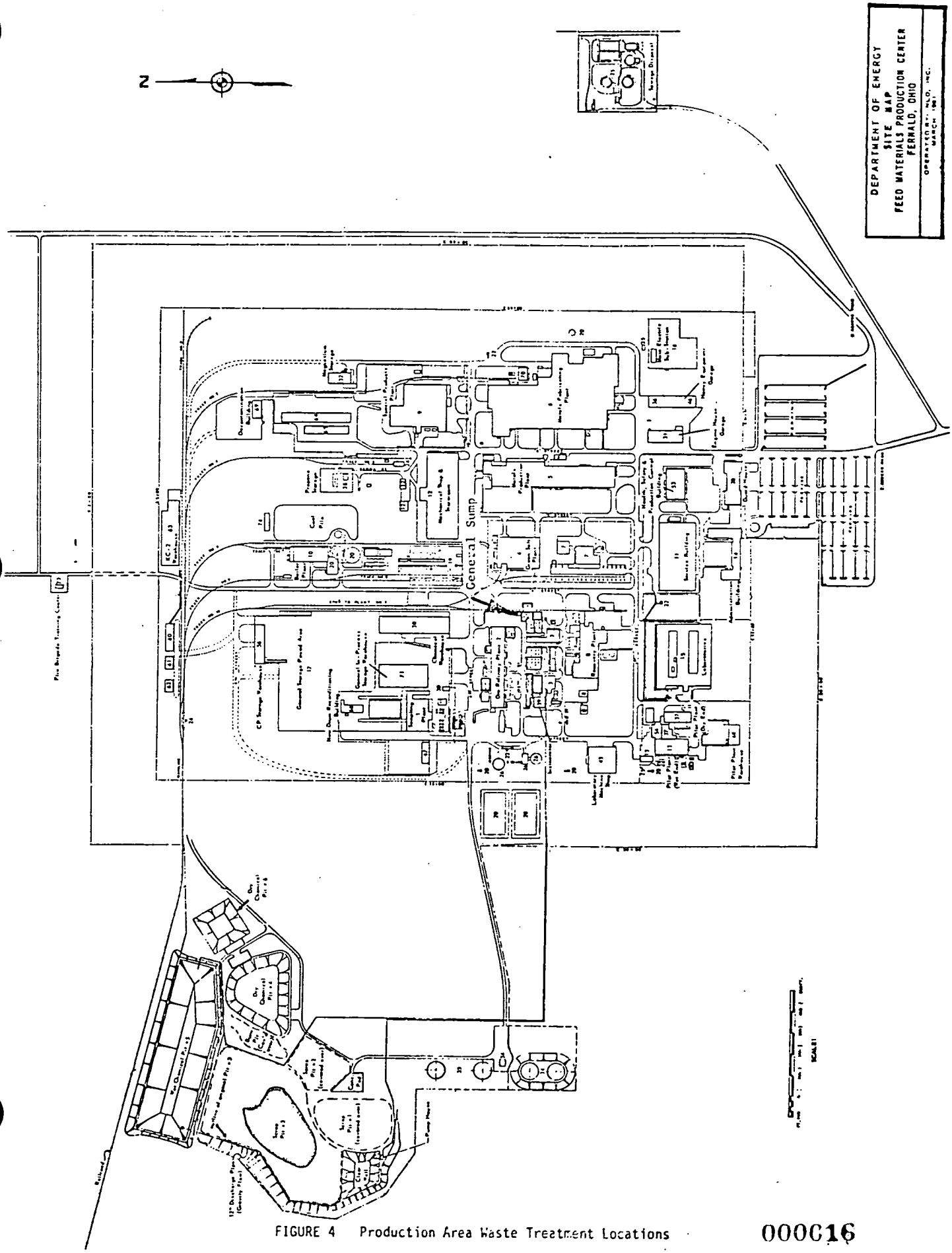

FIGURE 4 Production Area Waste Treatment Locations

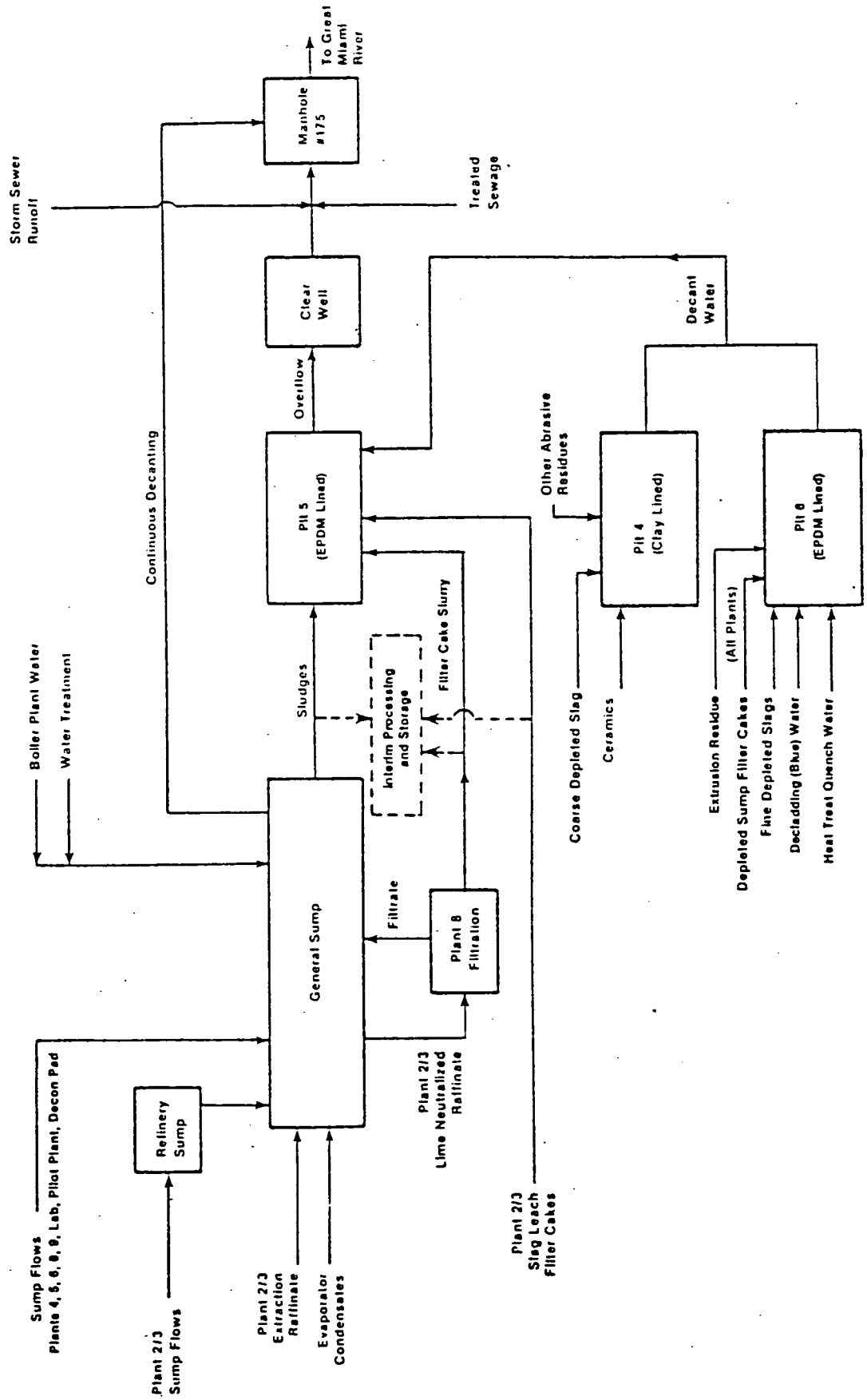

FIGURE 5 FMPC Waste Flows

3.2.2.1 Process Waste

3.2.2.1.1 Plant Treatment Facilities

All of the major process areas have individual treatment facilities capable of pretreating the liquid wastes that are peculiar to that particular process step. In these plant treatment units, virtually all of the radioactive materials in the wastes are removed as filter cake processed for recovery of U values. The filtrate produced is sent to the General Sump.

3.2.2.1.2 General Sump

A simplified flow diagram of the General Sump is shown in Figure 6.

Physically the General Sump is a collection of vertical tanks of various sizes, pumps, piping, and valves established on a controlled pad. It is designed to facilitate the storage and transfer of liquid wastes within the tankage complex and the discharge therefrom, and the addition of various reagents and coagulation aids. Provisions have been made for ease of sampling, both grab and continuous. Controls are simple but adequate. The pad is equipped with its own sump and drainage trenches to handle any leaks or accidental spills.

6284

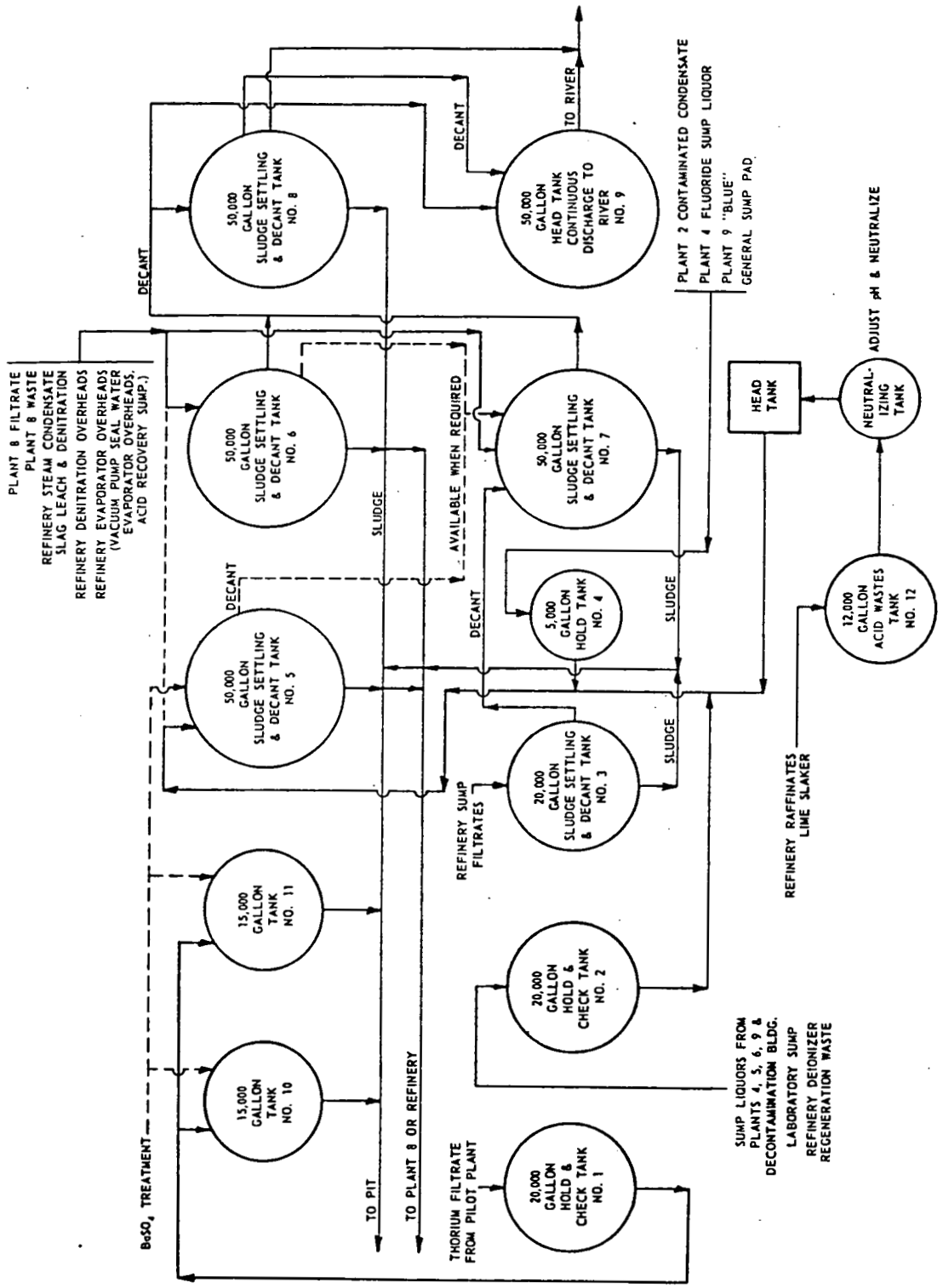

FIGURE 6 General Sump Flow Diagram

The process wastes from the various production plants and service facilities are received at the General Sump, checked for SS content, and segregated or selectively combined as required. If a certain waste exceeds discard specifications, it is sent to the Refinery for recovery of SS values.

Acidic raffinates from the refinery extraction process are segregated, neutralized with CaO, and then pumped to Plant 8 for solids removal by filtration on rotary vacuum filters.

Most other uranium-bearing wastes are adjusted for the pH with calcium oxide to obtain a maximum precipitation of radioactive material, and settled and decanted in successive steps prior to discharge of the supernatant liquor to the river. The settled sludges are also transferred to Plant 8 for filtration.

All liquid wastes, before discharge from the General Sump to the Wet Chemical Waste Pit or to the Miami River are sampled. The samples are analyzed to ascertain concentrations and total content of radioactive materials.

3.2.2.1.3 Plant 8

Waste slurries, including neutralized refinery raffinate, General Sump slurry, and slag leach slurry, are filtered on rotary vacuum filters in Plant 8. The filter cake solids are currently stored in drums on controlled storage pads for eventual off-site shipment for disposal. The solids-free filtrate is pumped to Pit 5 for subsequent discharge to the Great Miami River.

3.2.2.1.4 Chemical Waste Pit No. 5

The Chemical Waste Pit (Pit 5) is a large rubber lined settling basin located northwest of the production area. It is roughly rectangular in shape, with a surface area of approximately 3.6 acres. The capacity is approximately 21,000,000 gallons, and is now filled.

The filtrate liquid from the Plant 8 rotary vacuum filters is pumped to wet chemical Pit No. 5 which overflows through an effluent control tower near the western end of the pit into a clearwell from which it is pumped to the Miami River.

3.2.2.2 Sanitary Sewage

The sanitary waste collection and treatment system is completely separated from the process waste system. Uranium contamination occurs only through the plant laundry and showers; however, most of the uranium is removed in the normal sanitary sewage treatment and captured in the sludge, which is dried and roasted in Plant 8 for recovery of uranium values.

3.2.2.3 Storm Water

It is possible for uranium to enter the storm water system through accidental spills or pickup of settled particulates from stack emissions. Control and recovery of spills is made possible through diversion facilities provided, however, contamination from site runoff is a major source of uranium in the combined plant effluent.

3.3 Waste Storage Facilities

The three types of facilities at FMPC used for the long-term storage of wastes are the Chemical Waste Pits, the K-65 Tanks, and the Metal Oxide Tanks. The locations and current status of these waste storage facilities are shown in Figure 7 and Table I.

3.3.1 K-65 and Metal Oxide Tanks

There are two K-65 tanks and two metal oxide tanks, each of 139,000 cu.ft. capacity and constructed of post-tensioned concrete.

6284

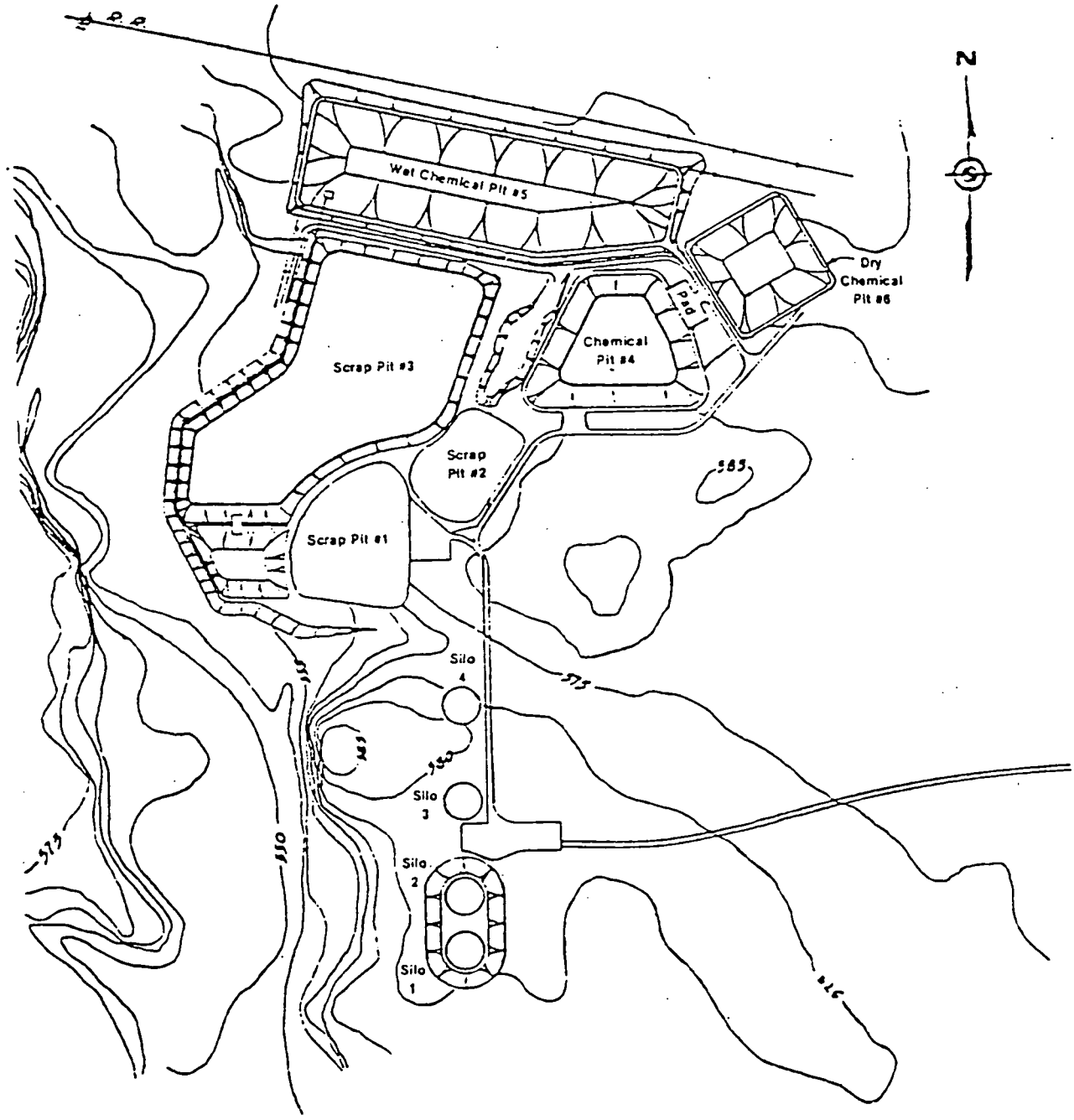

Pits 1, 2, and 3 are Retired and Covered.

FIGURE 7 FMPC Waste Storage Facility Layout

TABLE I
FMPC WASTE STORAGE FACILITY STATUS

Structure	Type	Volume (Million ft^3)	Status	Contents
Pit 1	Dry	1.08	Retired, covered	Mixed Solids, dry
Pit 2	Dry	0.351	Retired, covered	Mixed Solids, dry
Pit 3	Wet	6.12	Retired, covered	Mixed Sludges, wet
Pit 4	Dry	1.43	Full in FY-84	Slags, Abrasives, Metals, Dry
Pit 5	Wet	3.10	Full	Mixed Sludges, wet
Pit 6	Dry	0.374	30% Full	Slags, Misc. Materials, wet and dry
Silo 1	Wet	0.139	Full	High Radium Tailings, wet
Silo 2	Wet	0.139	Full	High Radium Tailings, wet
Silo 3	Dry	0.139	Full	Low Radium Metal Oxides, dry
Silo 4	Dry	0.139	Empty	---

3.3.2 Chemical Waste Pits

Six chemical waste pits have been constructed at FMPC. These pits are identified by number based on a chronological sequence of their construction.

Pits No. 1 through 4 vary in depth from approximately 12 feet to 27 feet. The wall and bottoms of these pits were lined with 1.5 to 2 feet of impervious blue clay. Pits No. 5 and 6 have a rubber membrane liner.

When a pit is filled with waste, it is covered with earth as soon as the contained material has stabilized and is capable of supporting the earth burden.

Nitrates and chlorides found in well samples in amounts slightly higher than background in past years indicated that the natural clay liners used in Pits No. 1 through 4 were not completely impervious; however, recent analyses show concentrations of these ions essentially at background levels. From this it is concluded that permeation from Pits 1, 2, 3. and 4 through the clay linings has essentially ceased.

3.4 Description of Surplus Facilities

3.4.1 Description of Decontamination and Decommissioning Radioactive Contaminated Facilities

There are no radioactively contaminated facilities and/or adjoining land at FMPC either, (a) excess to present needs, or (b) expected to become excess in the next five years under current program assumptions. The above accepts the definition

of "facility" as a distinct operational unit including building, capable of being separated from the whole for disposal to others. No facilities are designated as "standby" although there are portions of the equipment within certain facilities so designated. All facilities as such are considered as currently in use. There is no data available which can be applied to estimate a date when the status of these facilities can or will be changed to "excess" or "expected to become excess."

3.5 Effluent Control System

3.5.1 Liquid Waste Control

Liquid effluent streams from FMPC are released to the environment at two locations. These are:

3.5.1.1 Combined Sewers

The combined sewer outfall which discharges into the Great Miami River at a point almost directly east of the plant site. This point is 3½ river miles upstream from the village of New Baltimore.

3.5.1.2 Storm Sewer

The storm sewer overflow discharges into a branch of Paddy's Run Creek on site. Paddy's Run Creek joins the Great Miami River approximately two (2) miles south of the FMPC site and one and a half (1½) river miles downstream from New Baltimore. The flow of these streams is the only property that influences the dispersion of radionuclides in liquid effluents from FMPC.

6284

3.5.2 Airborne Radioactive Wastes

All radioactive dusts, fumes, mists, etc., emanating from production processes at FMPC are vented to the atmosphere only after passing through collection devices such as bag collectors, electrostatic precipitators, and scrubbing towers. Each installation is specially designed for the operation it serves.

Continuous stack samplers monitor the performance of dry air cleaning systems and grab sampling is used to evaluate efficiencies of wet scrubbers.

3.6 Site Administrative Limits for Radioactivity in Effluents

Administrative limits have been established for the following radioactive components in liquid effluents released to streams and settling basins:

a. Uranium in releases from the General Sump to the Chemical Waste Pit.

b. Uranium, radium, and total alpha and beta radioactivity in releases from the General Sump directly to the Miami River.

For solid radioactive waste materials, the uranium discard limits for each residue type are based upon economic considerations. Disposition of residues is specified in Standard Operating Procedures.

Numerical administrative limits for radioactive components in atmospheric releases and in releases of combined liquid effluent to the Miami River have not been established. Instead the ALARA (as low as reasonably achievable) concept is employed, but no radionuclide which is present is to exceed the concentration guide in Table II of DOE Order 5480.1 Chapter XI.

4.0 Radioactive Wastes Stored

The radionuclides encountered at FMPC are basically uranium, thorium, and the radioactive daughters of each. The processing of small quantities of recycle compounds does introduce other radionuclides such as plutonium, neptunium, ruthenium, technetium, etc. Technetium and ruthenium are present in FMPC effluent in detectable quantities but always below DOE concentration guides for water in uncontrolled areas. The other TRU radionuclides are present in only trace quantities and, therefore, do not cause any problems or require any additional treatment in the handling of wastes.

4.1 High-level Waste

No high-level wastes are stored at FMPC.

4.2 Solid Radioactive Waste

There are three principal types of solid wastes generated at the present time at FMPC which are discharged without treatment to Chemical Pits 4 and 6. They are:

a. Depleted Uranium Residues - Process residues of depleted uranium (0.142 - 0.44% ^{235}U) that are not suitable for remelt or containing uranium values in amounts not economical for recovery.

b. Contaminated Ceramics - slightly contaminated refractories from production electric furnaces discarded during repairs.

c. General Refuse - various types of trash, generally noncombustible, which have become slightly contaminated through incidental contact with radioactive substances.

Table II, Solid Waste Information Management System (SWIMS), now includes al radioactive wastes stored at FMPC owned by DOE. This includes the wastes formerly classified as "solid wastes" and listed in Table II in past

years, and those wastes formerly classified as "sludges and settled solids" in Sect. 4.3.3 "Chemical Waste Pits."

Part II of the DOE Solid Waste Management Questionnaire is not included as applicable to FMPC.

4.3 Other Radioactive Wastes

The major radioactive wastes other than solid wastes stored or accumulated at FMPC are the residues of ore concentrate processing. These wastes are stored in the K-65 tanks, the metal oxide tanks, and the chemical waste pits.

4.3.1 K-65 Tanks

The inventory of material stored in the K-65 tanks is as follows:

Description	Total Waste (Lbs.)	S.S. Content (Lbs.)
Australian Ra Cake	380,451	606
K-65 (Radium bearing from pitchblende ores)	19,004,675	24,121
Total	19,385,126	24,727

Estimated volume of material stored in the K-65 tanks is 195,000 cu.ft. The total redioactivity is estimated to be 2.0×10^3 µCi/Kg.

This material was formerly the property of the African Metals Corporation and was stored under a lease agreement with DOE at FMPC. Under a recent settlement DOE has assumed ownership and responsibility for this material.

6284

TABLE II

SOLID WASTE INFORMATION MANAGEMENT SYSTEM (SWIMS)

(Generated at NLO)

	Actual Fy-1982	Actual Fy-1983	(Estimated 15% increase over Fy-1983) Fy-1984
Total Curies (C)	134.40	147.79	169.96
Gross Volume (F)	94,642	114,751	131,964
Gross Weight (P)	7,964,667	9,253,887	10,641,970
Total LL (Kgs.)	398,808	438,531	504,311
U-235 (kgs.)	817.3	901	1,036.2
U-238 (kgs.)	397,991	437,630	503,275
U-235 (C)	1.7491	1.9281	2.2175
U-238 (C)	132.65	145.86	167.74
Vol. Sol. Slu. (F)	37,409	56,299	64,744
Vol. Dis. Sol. (F)	57,233	58,452	67,220
Wt. Sol. Slu. (P)	2,430,348	3,492,497	4,016,372
Wt. Dis. Sol. (P)	5,534,319	5,761,390	6,625,598

(Generated at RMI and Buried at NLO)

	Actual Fy-1982	Actual Fy-1983	(Estimated 15% increase over Fy-1983) Fy-1984
Vol. (F)	2,344	3,496	4,021
Wt. (P)	170,699	260,652	299,750
U (Kgs.)	31,039	51,563	59,297
U-235 (Kgs.)	43	89	102

TABLE II SOLID WASTE INFORMATION MANAGEMENT SYSTEM (SWIMS)

4.3.2 Metal Oxide Tanks

The inventory of material stored in the Metal Oxide Tank No. 3 is as follows:

Description	Total Waste (Lbs.)	S.S. Content (Lbs.)
Metallic Oxides (Residues from ore concentrates)	3,989,288	39,627

Estimated volume of material stored in Metal Oxide Tank No. 3 is 139,000 cu.ft. The total radioactivity is estimated to be $.013 \times 10^3$ µCi/Kg. The Metal Oxide Storage Tank No. 4 has never been used and remains empty.

4.3.3 Chemical Waste Pits

Chemical Waste Pits No. 1 and 2 were used as dry pits for mixed solids. These pits have been retired and covered.

Chemical Waste Pit No. 3 was used as a retention or settling basin for liquid effluent and slurries, also contained the solids dropped out in the settling process. This pit has been retired and covered.

Chemical Waste Pit No. 4 is used as a dry pit for slags, abrasives and metals. This pit will be completely filled during FY 1984.

Chemical Waste Pit No. 5 was used as a settling basin accumulating solids dropped out in the settling process. This pit is full and does not accept slurries; used now for liquid only.

Chemical Waste Pit No. 6 is used as a dry pit for slags, miscellaneous materials wet and dry.

5.0 Schedules and Major Milestones for Waste Management Activities

See Figure 8 and Table III for summary of milestone and budget schedules for low-level waste management projects.

5.1 Management of Low-Level Liquid Wastes

A major source of uranium in the combined liquid effluent stream is the storm sewer system. A new integrated water pollution control system is planned, which will remove this source of uranium discharge as well as treat other nonradioactive pollutants in the effluent stream. (See Figure 9.)

Facilities will be provided to:

- Treat by biodenitrification, the effluent stream from the General Sump and the Clearwell, which is made up of neutralized effluents from all process plants, Water Treatment Plant and the Boiler Plant blowdown water.

- Impound and settle all rainwater falling within the production area of the FMPC. The facility will consist of a 50,000 gallon lagoon to hold for recycle to the General Sump any inadvertent chemical spill within the production area; a 2.5 million gallon settling basin for rainwater retention and suspended solids reduction; necessary pumping station to transfer and mix the settling basin effluent with the effluents from Pit No. 5; and process this total effluent for final disposition to the Great Miami River.

6284

NLO, Inc.

MILESTONE CHART FOR FMPC WASTE MANAGEMENT

Project/Item	84	85	86	87	88	89	90	91	92	93	94	95	96	97	98	99
NTAMINATED SOLID WASTE MANAGEMENT																
Interim Operations																
- Primary Calciner	O	___	___	___	___	C										
ow-Level Waste Processing System (LLWPS)			F	_	_	_	O	___	___	___	___	___	___	___	___	___
- Contaminated Incinerator					F	_	_	_	O	___	___	___	___	___	___	___
- Pallet Shredder	F	_	_	_	O	___	___	___	___	___	___	___	___	___	___	___
Pit Mining							F	_	_	_	_	_	_	C		
LW) to NTS	F	_	_	O	___	___	___	___	___	___	___	___	___	___	___	___
it 4 Retirement			F	___	___	C										
Pit 6 Retirement							F	___	C							
-65 Residue	F	___	___	___	___	C	(Final Disposal Following Pit Mining)									
IQUID WASTE MANAGEMENT																
ter Pollution Control		_	_	_	O	___	___	___	___	___	___	___	___	___	___	___

TES:

Funding
Operation
- Completion or Closure

FIGURE 8 MILESTONE CHART FOR FMPC WASTE MANAGEMENT

TABLE III

SUMMARY OF COSTS FOR WASTE MANAGEMENT PROJECTS

LINE-ITEM PROJECTS:	FISCAL YEARS IN THOUSANDS 1984	1985	1986	1987	1988	1989	1990
1. Low-Level Waste Processing System (LLWPS)			2,500	10,500	6,000		
2. Water Pollution Control - Biodenitrification and General Improvements (Program GE)	4,000	4,100					
3. Contaminated Scrap Processing/-Volume Reduction					2,000		
SUBTOTAL	4,000	4,100	2,500	10,500	8.000	-0-	-0-
General Plant Projects (GPP)	225	450	-0-	-0-	-0-	920	-0-
Plant & Capital Equipment (P&CE)	-0-	250	300	-0-	-0-	-0-	-0-
TOTAL CAPITAL REQUIREMENTS	4,225	4,800	2.800	10,500	8,000	920	-0-
TOTAL OPERATING REQUIREMENTS	1,254	3.418	3,939	3,869	4,038	4,288	4,576
PROGRAM AR/GE	GE	GE/AR	AR	AR	AR	AR	AR

NOTE: Funding for GPP after Fy-85 and P&CE after Fy-86 is unclear at this time due to revisions in the disposal methods of FMPC Low-Level Waste (3/84).

6284

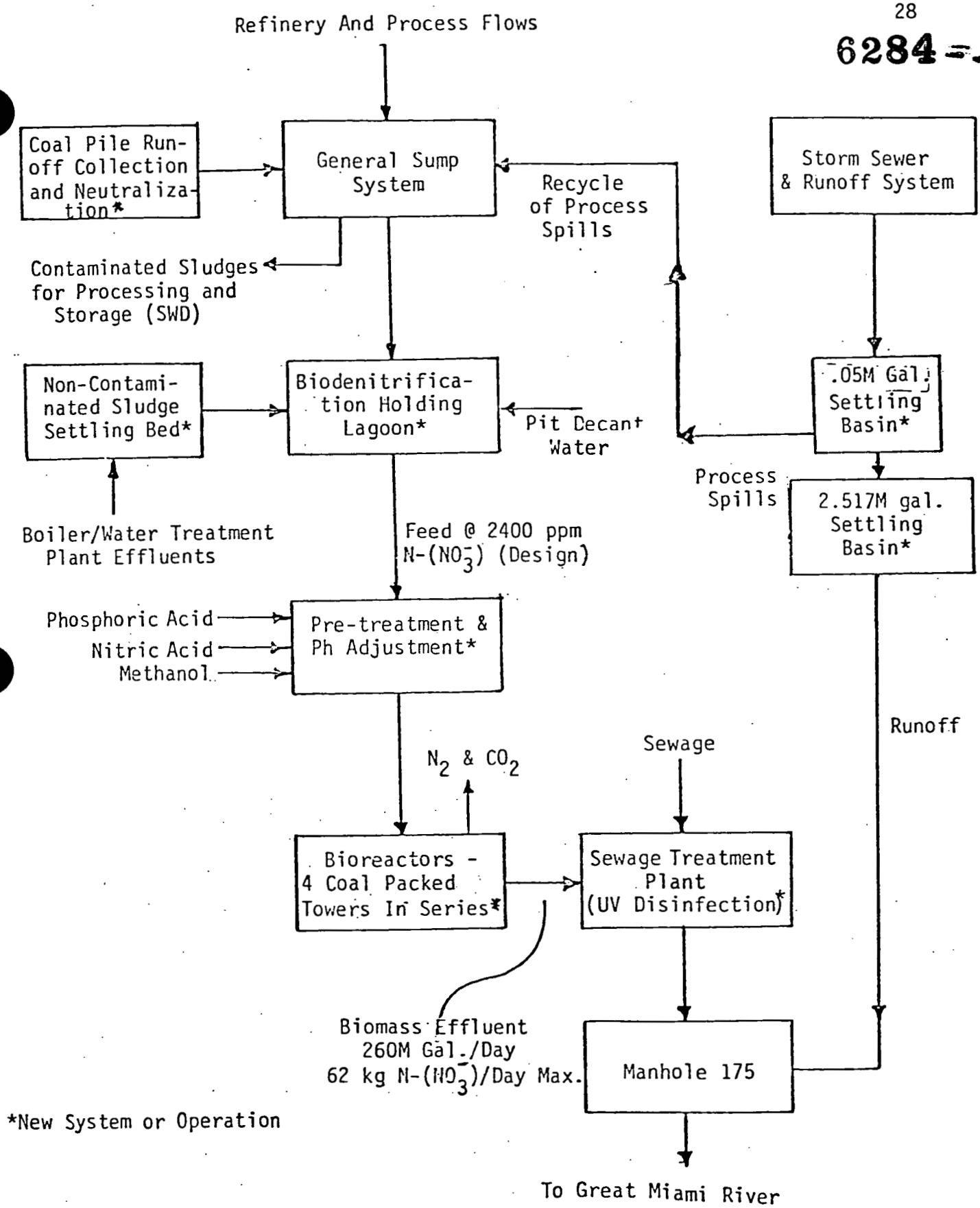

FIGURE 9 FLOWSHEET - Integrated Water Pollution Control System

- Collect and treat acidic water drainage from the Boiler Plant coal pile. A concrete collection trench system, sump, neutralization bed and pumps for transferring the effluent to the General Sump will be included.

- Reduce the chlorine residuals from the Sewage Treatment Plant effluent by replacing the existing chlorination system with an ultraviolet disinfection unit.

These new water pollution control facilities are being constructed as a line item construction project from FY 1984 through FY 1985, at a cost of $9.5 million.

5.2 Management of Low-Level Solid Wastes

Objectives for management of low-level solid wastes at FMPC are (1) processing/shipping/disposal of wastes as they are generated, (2) maintenance and improvement of existing waste storage facilities, and (3) achieving final disposal of FMPC stored wastes as soon as practicable.

During past FMPC operations (1952-1983) contaminated solids and slurries having concentrations too low to permit economic recovery of uranium or thorium were placed in dry scrap pits, wet chemical waste pits, or aboveground concrete silos. These storage facilities are now nearly filled, and new facilities for waste storage are required. Because of the potential environmental impacts, additional storage pits for contaminated wastes will not be constructed.

As an alternative, new facilities are planned to process and package all contaminated wastes for off-site disposal at the Nevada Test Site solid waste disposal site. There has been submitted a line-item project for funding of $14.6 million in FY 1986, -7, -8, to provide a FMPC waste processing system. Since these facilities are not scheduled to become operational before FY 1988 plans have been made for interim processing of all wet and dry solid wastes to be generated from mid-year 1984 through FY 1987.

Waste management activities for the near-term consist of interim operations utilizing existing equipment and facilities until new dedicated systems become operational. The interim plan stresses maintenance of production goals despite the temporary overloading of liquid and solid waste treatment facilities during the interim period.

Radioactive waste management activities being planned for the long-range years fall into two main groups: contaminated production waste management, and final disposal of existing pit inventories.

Extended waste management programs are expected to continue well beyond the long-range years. Reclamation of solids currently stored in pits on-site will be initiated during the post FY 1989 period; however, the final schedule and priorities for pit remedial actions will be determined by geohydrological studies currently being conducted to evaluate the stability of the existing pits. Contaminated material in existing pits will be processed for uranium recovery when practical, the tailings dried and packaged for off-site disposal to minimize future environmental insult.

The specific projects and the milestones for their implementation are listed in Figure 8. Contaminated wastes from continuing operations will be dried and shipped off-site for disposal. Separate storage facilities will be provided for uncontaminated wastes so that the cost of contaminated waste processing/shipping/disposal may be minimized.

5.2.1 Interim Operations

The preliminary flowsheet for the interim processing operations is shown in Figure 9. As part of this system, slurries formerly going to Pit 5 are diverted to Plant 8 for filtration. Filtrates within specifications for uranium and other materials will continue to be discharged to the Great Miami River via Manhole 175. The contaminated wet filter cakes will be dried in the primary calciner in Plant 8 to produce a free flowing powder, then sealed in lined drums for off-site shipment and disposal.

Beginning with full Mark 15 production loads, the primary calciner will not have sufficient capacity to meet projected waste management needs. Even with a seven-day-per-week, three-shift operation, the anticipated drying capacity of about 2500 tonnes of filter cakes per year is still not adequate to meet all waste management needs. Consequently, alternate storage of some filter cakes will be necessary until additional drying capacity becomes available with the new facilities in FY 1988. Slag filter cakes from Refinery digestion may be held in 55-gallon drums for later processing because of their low moisture and high density. Other measures will also be taken to reduce the amount of wet cakes for drying. These include reduction of solids from neutralization operations, where

possible, and the separate disposal of noncontaminated calcium carbonate sludges from Boiler Plant operations.

5.2.2 Low-Level Waste Processing System

Planned contaminated waste projects include a Low-Level Waste Processing System (LLWPS), and combustible contaminated waste incineration. Because of the extreme shortage of existing pit and silo storage capacity, these systems must be implemented without delay. The bulk of the projects should be funded in FY 1986, for operation by FY 1988, to meet peak waste generation loads projected with planned Mark 15 implementation.

The LLWPS will convert all contaminated sludges and solids to a uniform dry solid suitable for packaging, shipping, and disposal. The treatment paths for the various streams involved are diagrammed in Figure 10. Dry slag and scrap will be crushed and screened to the proper size for packaging. Filter cakes from Plant 8, depleted sump cake from all plants, and oversize depleted milled slag will be fed to a rotary kiln.

Liquids from the filtration step will proceed to the biodenitrification system for treatment and discharge. A scrubber, NO_x destructor, and dust collectors will control atmospheric emissions from the kiln. An incinerator for contaminated burnable materials will convert these wastes to an ash compatible with off-site disposal. Emissions equipment will be provided to control particulates and corrosive gasses to acceptable levels from this unit.

6284

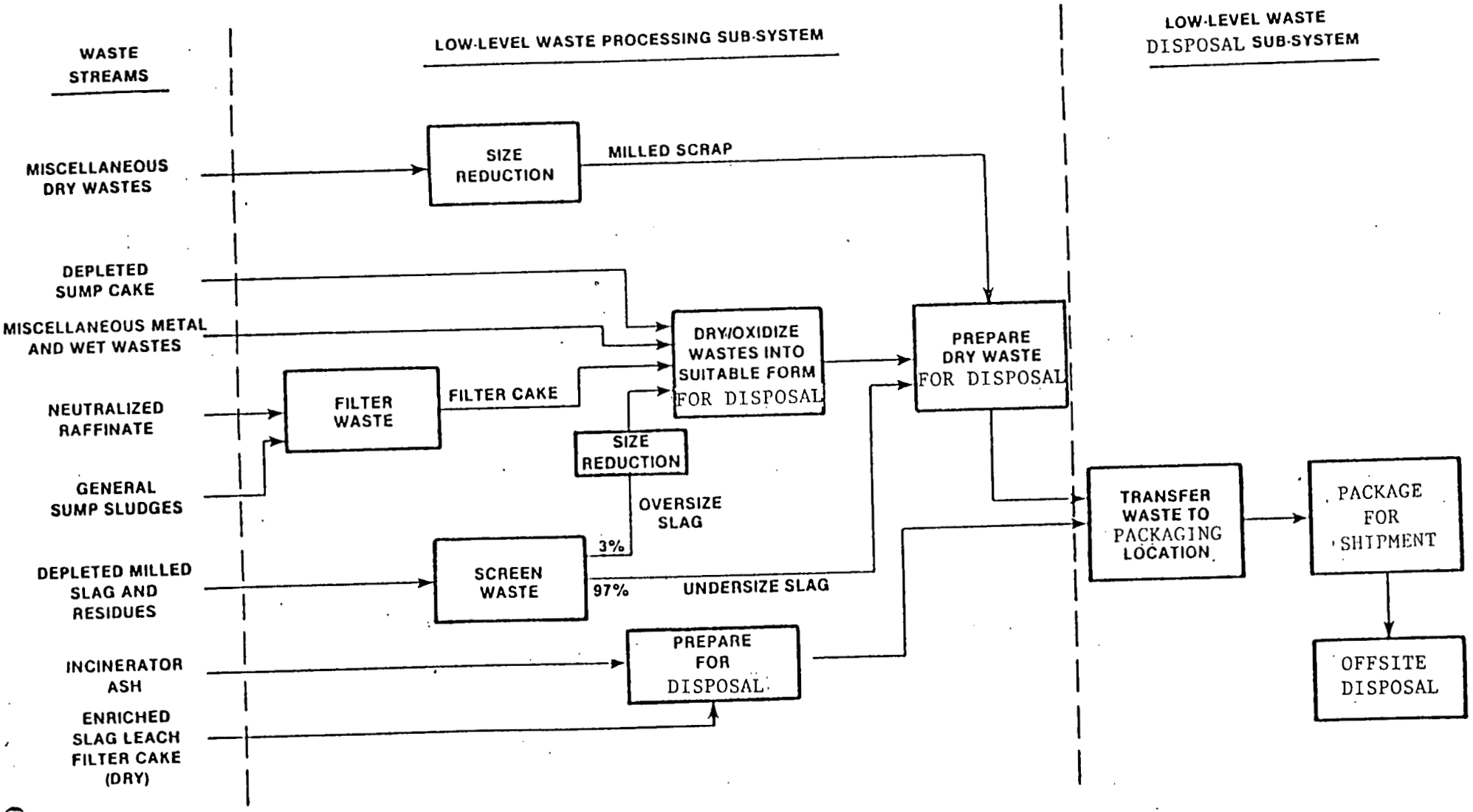
WASTE STREAMS
LOW-LEVEL WASTE PROCESSING SUB-SYSTEM
LOW-LEVEL WASTE DISPOSAL SUB-SYSTEM
MISCELLANEOUS DRY WASTES
SIZE REDUCTION
MILLED SCRAP
DEPLETED SUMP CAKE
MISCELLANEOUS METAL AND WET WASTES
DRY/OXIDIZE WASTES INTO SUITABLE FORM FOR DISPOSAL
PREPARE DRY WASTE FOR DISPOSAL
NEUTRALIZED RAFFINATE
FILTER WASTE
FILTER CAKE
SIZE REDUCTION
GENERAL SUMP SLUDGES
OVERSIZE SLAG
3%
DEPLETED MILLED SLAG AND RESIDUES
SCREEN WASTE
97%
UNDERSIZE SLAG
TRANSFER WASTE TO PACKAGING LOCATION
PACKAGE FOR SHIPMENT
INCINERATOR ASH
PREPARE FOR DISPOSAL
OFFSITE DISPOSAL
ENRICHED SLAG LEACH FILTER CAKE (DRY)

000040

The LLWPS equipment will be located in existing Plant 8 and a new annex on the south side of Plant 8. Equipment will include a kiln, crusher, screen, filters, tanks, box furnaces, mill, conveyor, incinerator, and emissions control equipment.

5.2.3 Magnesium Fluoride Conversion

An operations analysis of processing depleted uranium residues is in progress to determine the feasibility of reducing burdens on waste management and storage systems. This process, developed by NLO's Development Department (Technical Division), would convert waste slag (magnesium fluoride) to a salable product (calcium fluoride), thereby removing one of the largest single waste streams resulting from FMPC production operations. A pilot run to test the process will be conducted during FY 1984.

5.2.4 K-65 Residues

Studies are required to assess material retrieval methods, radon abatement, and feasibility of precious metals recovery from the two K-65 residue storage tanks.

5.2.5 Management of Mixed Hazardous Waste

A new DOE Order 5480.2 establishes hazardous waste management procedures for the FMPC. Although facilities administered under the authority of the Atomic Energy Act are not subject to EPA or State regulation under the Resource Conservation and Recovery Act (RCRA), the new DOE procedures follow, to the extent practicable, the requirements of RCRA.

The new requirments do not significantly affect the FMPC, since the site does not generally produce, treat or store listed hazardous wastes. However, a small amount of contaminated spent solvent and still bottoms from an off-site source are currently stored onsite and will require an upgraded storage pad, which is planned for FY 1985. No on-site treatment or disposal is anticipated.

5.2.6 Long-Term Waste Management and Remedial Action Planning

5.2.6.1 Pit Mining

With the burden of ongoing waste management shifting to the LLWPS, contaminated materials in Pits No. 5 and 3 will be mined to recover their uranium content and be converted to dry form for disposal. Pit mining and uranium recovery processes will be examined over the next several years. While the economic benefits of a uranium recovery process are expected to be marginal, the main benefit will be elimination of the most serious potential sources of long-term environmental hazards from leaks and leaching of wastes into the groundwater. The reduction of radioactivity and subsequent kiln-drying of the wastes will further reduce the specific hazards of their transport and disposal.

A residue recovery and processing facility would be required at a cost of about $920,000 to be funded in FY 1989. It is anticipated that additional capital

expenditures will be necessary for Pit 3 mining facilities in the post FY 1989 period. After an initial phase-in period, Pit 5 mining will be completed by about FY 1997. The pit liner and any contaminated soil would be removed and the pit would be refurbished for storage of uncontaminated wastes. Mining of Pit 3 would probably commence in FY 1997, and continue beyond FY 1998, for an additional four years. Evaluation and mining of dry Pits 1, 2, 4 and 6 would be deferred until mining of Pits 5 and 3 has been completed. These facilities may also be suitable for recovery and reprocessing of the K-65 residues in Silos No. 1 and 2; however, additional capital expenditures would be anticipated for shielding and other measures, perhaps remote handling, to reduce exposures.

5.2.6.2 Removal of the Material Storage Towers, South of Plant 1

Material from the deteriorating storage towers continues to be washed into the storm sewer system despite the cleanup and residue removal efforts conducted several years ago. No maintenance has been performed for many years and metal components are heavily rusted. Tiles occasionally drop from the tower facing.

It is evident that the structure will eventually be razed. Continued deterioration may make that task a more difficult one. Removal of the structure will be

required to eliminate this source of storm sewer contamination. Removal would also eliminate the potential damage to the nearby enriched uranyl nitrate solution storage tanks.

Funding of $125,000 has been provided in FY 1984, for the removal of the storage towers. The proper disposal of the tower materials will be included in the project.

5.2.7 Contaminated Metal Scrap

5.2.7.1 Ferrous Scrap

A large volume of contaminated ferrous scrap metal is on hand, and continues to accumulate, at the FMPC. A requested amendment to the code of Federal Regulations establishing de minimis limits for uranium and technetium-99 contents for unrestricted sale of decontaminated metals (including ferrous metals) met with opposition and has not been approved, as yet. Should this approval not be granted, methods other than the proposed decontamination by smelting must be developed for disposal. Future work in this area, including keeping abreast of developments by other agencies, and studying surface decontamination and densification techniques for possible application at NLO will be required.

5.2.7.2 Copper Scrap

Processing, and subsequent disposal, of the NLO inventory or slightly contaminated scrap copper generated from the cascade and uprating (CIP/CUP) programs is targeted for the future.

A construction Proposal (CP) has been approved to modify the present scrap copper preparation unit to yield a much cleaner copper metal by way of more insulation removal. This modification will be completed in FY 1984. Upon completion, plans are to process the entire scrap copper inventory through the preparation unit, i.e., size and clean, then drum the pellet product; all in accordance with good materials management.

UNC has requested that NLO supply them with a test quantity of these "cleaned" pellets, when available. Other in-house uses of these will be sought through the long-range years. The sale of this material will also be investigated.

In the past, over 120 tons of scrap copper were processed in the preparation unit and then cast into ingot form. UNC has utilized a number of these ingots in the co-extrusion step for N-Reactor elements. They will continue to request small quantities of these ingots in the coming year.

5.3 Management of Airborne Radioactive Waste

At the FMPC, the principal means of airborne radionuclide emissions is the discharge from dust collector stacks. The collectors are efficient; properly operating units have a collection efficiency that exceeds 99%. Little improvement, therefore, could be obtained by minor changes in collector operation. Scrubbers are less efficient than collectors, but only several scrubbers are used at the FMPC, while over 50 collectors are in continuous or part-time use, and 20 other units have been abandoned or are on standby status.

Methods and costs for improved dust collection will be studied using data generated from the stack monitoring recording capital additions in FY 1983, and Productivity Retention Projects for funding in FY 1985. Replacement and/or upgrading of obsolete dust collectors throughout the plants will be covered by Productivity Retention Projects for FY 1986.

To achieve an emissions reduction of 50% or 90%, secondary air cleaning systems are needed. A system such as high efficiency filters would provide a 90% reduction for about the same cost needed to obtain a 50% reduction. The estimated cost to achieve a 50% or 90% reduction in dust collector and scrubber emissions is $14,020,000.

6.0 Quality Assurance and Quality Control

6.1 Quality Assurance (QA)

The Quality Assurance Program Manual contains policies, procedures, and concepts for the plantwide QA program. It is reviewed and updated annually by the Quality Assurance Committee. Revision 6 was issued February 28, 1983, and Revision 7 on August 2, 1983.

Quality Assurance Analyses are performed on each operation including waste management activities updated annually by the division involved. The QA level of each operation is identified on the QA Analysis form and requires the Division Director's approval. Formal Quality Assurance Plans are required for each operation assigned QA Level IA, IB, or II. These plans are prepared by the division responsible for their implementation and are subject to review/approval by each member of the Quality Assurance Committee. Formal audits are conducted on either a two-, three-, or five-year basis for each QA Plan depending on its QA Level. These audits are conducted by the Quality Assurance Audit Committee at an average rate of one per month.

Monthly Quality Assurance Reports are compiled by Quality Control to include the various types of QA activity conducted during the month, as reported by each division. This report gives visibility to the QA program and shows evidence of its implementation and effectiveness plantwide to NLO Management and ORO.

Bi-monthly Quality Assurance Status Reports are compiled by the Quality Control Department. Complete listings of all Quality Assurance Analysis, Quality Assurance Plans, Quality Assurance Plan Audits (schedule, performance, reply, and follow up), Quality Control Conformance Audits, and Standard Operating Procedures subject to Quality Control audit are prepared. This presents an overall view of the formal Quality Assurance Program to Management and ORO.

6.2 Manufacturing Standards

Manufacturing Standards consist of Standard Operating Procedures and Manufacturing Specifications for FMPC operations and systems including waste management. These standards are an important part of the QA effort and are maintained to reflect current operations. Acceptable waste form criteria will be developed and included in the Manufacturing Specifications section of the Standards.

6.3 Product and Process Audits

Planned and systematic audits of waste process operations will result in better operating procedures and improved compliance. Informal audits of process operations will be directed to specific problem areas. No major changes are planned in the standard NLO audit procedures.

7.0 Environmental Monitoring Programs

7.1 Water Monitoring

An off-site monitoring program is conducted to determine the effect of FMPC releases on the quality of the Miami River. The sampling locations that are used in implementing this program are shown in Figure 11. Daily samples are taken at Point W1 to give an indication of the quality of the water approaching the FMPC discharge. Point W2 is the continuous sampler at Manhole 175, the final access point on the waste effluent line prior to discharge to the river. Point W3 is located downstream from the FMPC discharge point. A continuous sample is withdrawn from the river at this point and analyzed no less frequently than once a week. Because of the occasional discharge of storm water to Paddy's Run, samples are collected weekly from the Miami River at Miamitown (Point W4). A sample comparison of all samples provides an effective

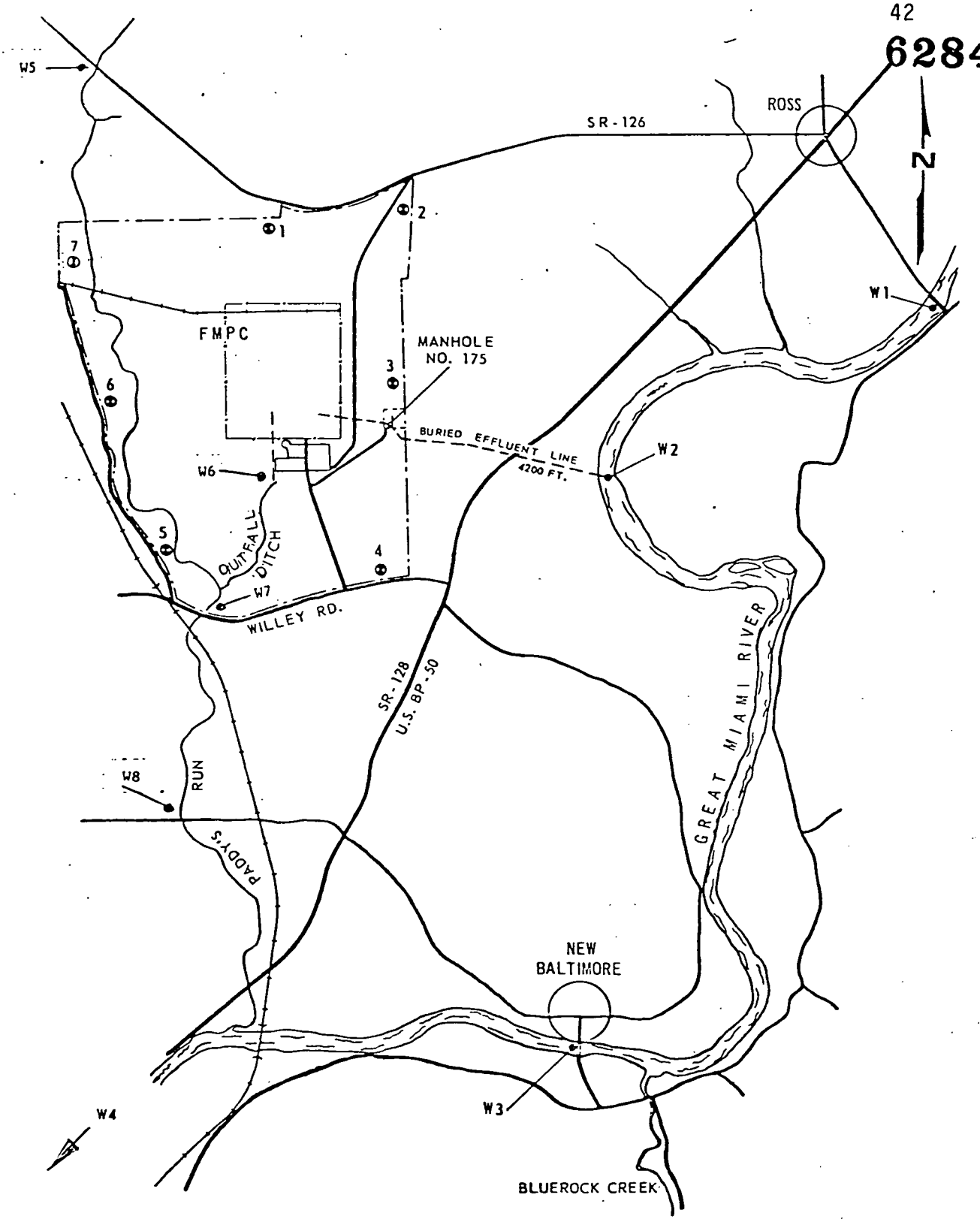

W4 is located at Miamitown, 4.7 miles from Paddy's Run.

FIGURE 11 FMPC and Surrounding Area

⊕ BOUNDARY AIR SAMPLING STATIONS.
W1, W3 & W4 - WATER SAMPLING LOCATIONS.
W2 - POINT OF PLANT DISCHARGE
SCALE: 1" = 3055'

means of noting the effect of FMPC discharge on the river.

All data compiled with respect to discharge of radionuclides from Manhole 175 to the Miami River is tabulated as part of the Waste Water Quality Report, issued each month. The Report form is shown on Figure 12.

7.2 Air Monitoring

An environmental air sampling program is employed to determine the amount of radioactive material in the air surrounding the project. Seven permanent air sampling stations are operated around the perimeter of FMPC, located as shown on Figure 11. These samplers are in continuous operation. The samples are collected and analyzed each week. Samples of soil radionuclide levels are also monitored at the site perimeter sampling stations, and at various off-site locations.

Monthly averages for releases of uranium, alpha and beta radioactivity in FY-1983 were within concentration guidelines for uncontrolled areas as specified in DOE Order 5480.1A. The average concentrations of air-borne particulates measured at the plant boundary stations during FY-1983 were within the ambient air limits set by the Ohio EPA.

The EPA has added radionuclides as hazardous air pollutants subject to possible regulation as airborne carcinogens under Section 12 of the Clean Air Act. Standards being developed by EPA will be applicable to DOE sites, including the FMPC.

NLO, INC.
HEALTH & SAFE[illegible]IVISION

WASTE WAT[illegible]UALITY REPORT: NPDES Permit Parameters

For the Month of _____

DATE	MANHOLE – 175 FLOW 10^6 gal.	GRAB pH	SUSPENDED SOLIDS mg/L	AMMONIA (N) kg/day	NITRATE (N) kg/day	OIL & GREASE mg/L	RESIDUAL CHLORINE mg/L	COMBINED GENERAL SUMP & CLEARWELL FLOW 10^6 gal.	SUSPENDED SOLIDS kg/day	CHROMIUM (+6) kg/day	CHROMIUM (TOTAL) kg/day	IRON kg/day	NICKEL kg/day	COPPER kg/day
1														
2														
3														
4														
5														
6														
7														
8														
9														
10														
11														
12														
13														
14														
15														
16														
17														
18														
19														
20														
21														
22														
23														
24														
25														
26														
27														
28														
29														
30														
31														
AVG[1]			*											
LIMITS 2		6.5 - 10.0	60	43	3180	15	0.10		12.8	0.008	0.102	0.85	0.256	0.051
LIMITS 3			20	28	1590				6.2	0.004	0.050	0.41	0.124	0.025
LIMITS 4		6.5 - 9.0				5	0.002							

DAILY TOTAL FLOW

RECORDED DAILY

ANALYZED DAILY FROM 24-HOUR COMPOSIT SAMPLE

ANALYZED WEEKLY FROM ONE 24-HOUR COMPOSIT SAMPLE

ANALYZED DAILY FROM 24-HOUR COMPOSIT SAMPLE

ANALYZED WEEKLY FROM ONE 24-HOUR SAMPLE

ANALYZED WEEKLY FROM ONE GRAB SAMPLE (Record Summer Months ONLY)

RECORD DAILY

RECORD WEEKLY

RECORD WEEKLY

RECORD WEEKLY

RECORD WEEKLY

RECORD WEEKLY

RECORD WEEKLY

000051

6284

NOTES: [1]Arithmetic averages except for (*) which is a flow-weighted average. [2]NPDES "Daily Maximum". [3]NPDES "Daily Average" which means the average for the month.
[4]Ohio EPA limits which apply to the Great Miami River, downstream from the effluent mixing zone.

NLO-HAS-351 (REV. 1/28/81)

NLO, INC.
HEALTH & SAFET ISION

WASTE WATER QUALITY REPORT: NPDES Permit Parameters

For the Month of _____

DATE	STORM SEWER LIFT STATION			STORM SEWER OUTFALL				SEWAGE TREATMENT PLANT						
	FLOW 10^6 gal.	SUSPENDED SOLIDS mg/L	OIL & GREASE mg/L	FLOW 10^6 gal.	GRAB pH	SUSPENDED SOLIDS mg/L	OIL & GREASE mg/L	FLOW 10^6 gal.	GRAB pH	5-DAY BOD mg/L	5-DAY BOD kg/day	SUSPENDED SOLIDS mg/L	SUSPENDED SOLIDS kg/day	FECAL COLIFORM No/100mL
1														
2														
3														
4														
5														
6														
7														
8														
9														
10														
11														
12														
13														
14	RECORDED DAILY	RECORDED WEEKLY or EXTRA HEAVY FLOW	RECORDED WEEKLY or EXTRA HEAVY FLOW	RECORD HEAVY FLOWS	RECORD HEAVY FLOWS	RECORD HEAVY FLOWS	RECORD HEAVY FLOWS	RECORD DAILY	RECORD DAILY	RECORD WEEKLY	RECORD WEEKLY	RECORD WEEKLY	RECORD WEEKLY	RECORD WEEKLY (Summer Months ONLY)
15														
16														
17														
18														
19														
20														
21														
22														
23														
24														
25														
26														
27														
28														
29														
30														
31														
AVG.[1]										*		*		*
LIMITS 2		100	15		6.5 - 9.0	100	15		6.5 - 9.0	40	10.0	40	10.0	2000
LIMITS 3		30				30				20	5.0	20	5.0	1000
LIMITS 4			5		6.5 - 9.0		5							1000 (Mo. Geo. Mean)

000052

(284-1

NOTES: [1]Arithmetic average except for (*) which are flow-weighted averages. [2]NPDES "Daily Maximum". [3]NPDES "Daily Average" which means the average for the month.
[4]Ohio EPA limits which apply to the Great Miami River and Paddy's Run downstream from the effluent mixing zone.

NLO, INC.
HEALTH & SAFETY DIVISION

WASTE WATER QUALITY REPORT: Radioactivity and Miscellaneous Data, MH-175

For the Month of _____

DATE	TOTAL URANIUM mg/L	TOTAL THORIUM mg/L	TOTAL RADIUM 226 d/m/mL	TOTAL RADIUM 228 d/m/mL	GROSS ALPHA d/m/mL	GROSS BETA d/m/mL	pH OF 24-HR COMPOSITE	FECAL COLIFORM NO/100ML	DISSOLVED OXYGEN mg/L	AMMONIA NITROGEN mg/L	NITRATE NITROGEN mg/L	CHLORIDE mg/L	FLUORIDE mg/L
1													
2													
3													
4													
5													
6													
7													
8													
9													
10													
11													
12													
13													
14													
15													
16													
17													
18													
19													
20													
21													
22													
23													
24													
25													
26													
27													
28													
29													
30													
31													
AVG.[1]													
LIMITS OHIO EPA							6.5-9.0	200 (Mo. Geo. Mean)[2]	>5.0 AVG. 4.0 MIN.	13	23		2.0
LIMITS DOE ORDER 5480.1A	1.8	9	0.066	0.066									

ANALYZED DAILY FROM 24-HOUR COMPOSITE SAMPLE

ANALYSIS MADE ONCE PER MONTH FROM COMPOSITE OF DAILY 24-HOUR SAMPLES

ANALYSIS MADE TWICE PER MONTH FROM 15-DAY COMPOSITE OF DAILY 24-HOUR SAMPLES

ANALYSIS MADE TWICE PER MONTH FROM 15-DAY COMPOSITE OF DAILY 24-HOUR SAMPLES

ANALYZED DAILY FROM 24-HOUR COMPOSITE SAMPLE

ANALYZED DAILY FROM 24-HOUR COMPOSITE SAMPLE

RECORDED DAILY

RECORDED WEEKLY

ANALYZED TWICE/DAY FROM GRAB SAMPLE (VARIED TIMES OF DAYS)

RECORDED WEEKLY or TIME OF HEAVY FLOW

RECORDED WEEKLY or TIME OF HEAVY FLOW

RECORDED WEEKLY or TIME OF HEAVY FLOW

NOTES: [1]Arithmetic averages except for Fecal Coliform.

[2]Monthly geometric mean.

[3]Ohio EPA limits apply in the Great Miami River, downstream from the effluent mixing zone. DOE Order 5480.1A guide values are promulgated as off-site limits but in practice are used as target values for the plant effluent.

000053

6284

N[redacted] INC[redacted]
HEALTH & SA[redacted] DIVISION

WASTE WA[redacted] QUALITY REPORT: General Data

For the Month of _____

DATE	RIVER	PRECIPITATION	AIR TEMPERATURE		WATER TEMP. MH-175	DISSOLVED SOLIDS, mg/L						
	FLOW CFS	INCHES, AS WATER	MAXIMUM °F	MINIMUM °F	MAXIMUM °F	CLEAR WELL	GEN. SUMP TO RIVER	SEWAGE PLANT EFFLUENT	STORM SEWER LIFT STATION	MH-175 [3]		
1												
2												
3												
4												
5												
6	RECORDED DAILY AT 8:00 AM					ANALYZED DAILY FROM 24-HOUR COMPOSITE SAMPLE WHEN PUMPED	ANALYZED DAILY FROM COMPOSITE SAMPLE DURING PERIOD OF DECANT	ANALYZED WEEKLY FROM COMPOSITE OF DAILY SAMPLES FOR WEEK	ANALYZED DAILY FROM 24-HOUR COMPOSITE SAMPLE	ANALYZED DAILY FROM 24-HOUR COMPOSITE SAMPLE		
7												
8												
9												
10												
11												
12												
13		RECORDED DAILY	RECORDED DAILY	RECORDED DAILY	RECORDED DAILY							
14												
15												
16												
17												
18												
19												
20												
21												
22												
23												
24												
25												
26												
27												
28												
29												
30												
31												
AVG. [1]		2										

00054

6284

NOTES: [1]*Arithmetic averages except for Precipitation.*
[2]*Total precipitation, in inches, measured as water.*
[3]*Ohio EPA limit for the Great Miami River is 1500 mg/L, total, or 150 mg/L from human activity. This limit applies downstream from the effluent mixing zone.*

HLO-045-051 (REV. 1/28/81)

7.3 Groundwater Monitoring

Test wells have been drilled around the Waste Pits to permit monitoring of ground water in the area. The location of these wells is shown in Figure 13. Sampling of these wells, performed on a monthly basis, furnishes an indication of the condition of the pit liners.

A groundwater study will be performed during 1984 to investigate the source(s) of elevated uranium concentrations in groundwater at the FMPC and its vicinity, and to recommend appropriate remedial action measures, if warranted. The professional services of a qualified engineering/-technical firm will be obtained to conduct the study.

8.0 Radioactive Waste Documentation Systems

A documentation system for accountability of off-site waste shipment and disposal will be developed prior to initiation of shipping low-level waste material to Nevada Test Site for disposal.

6284

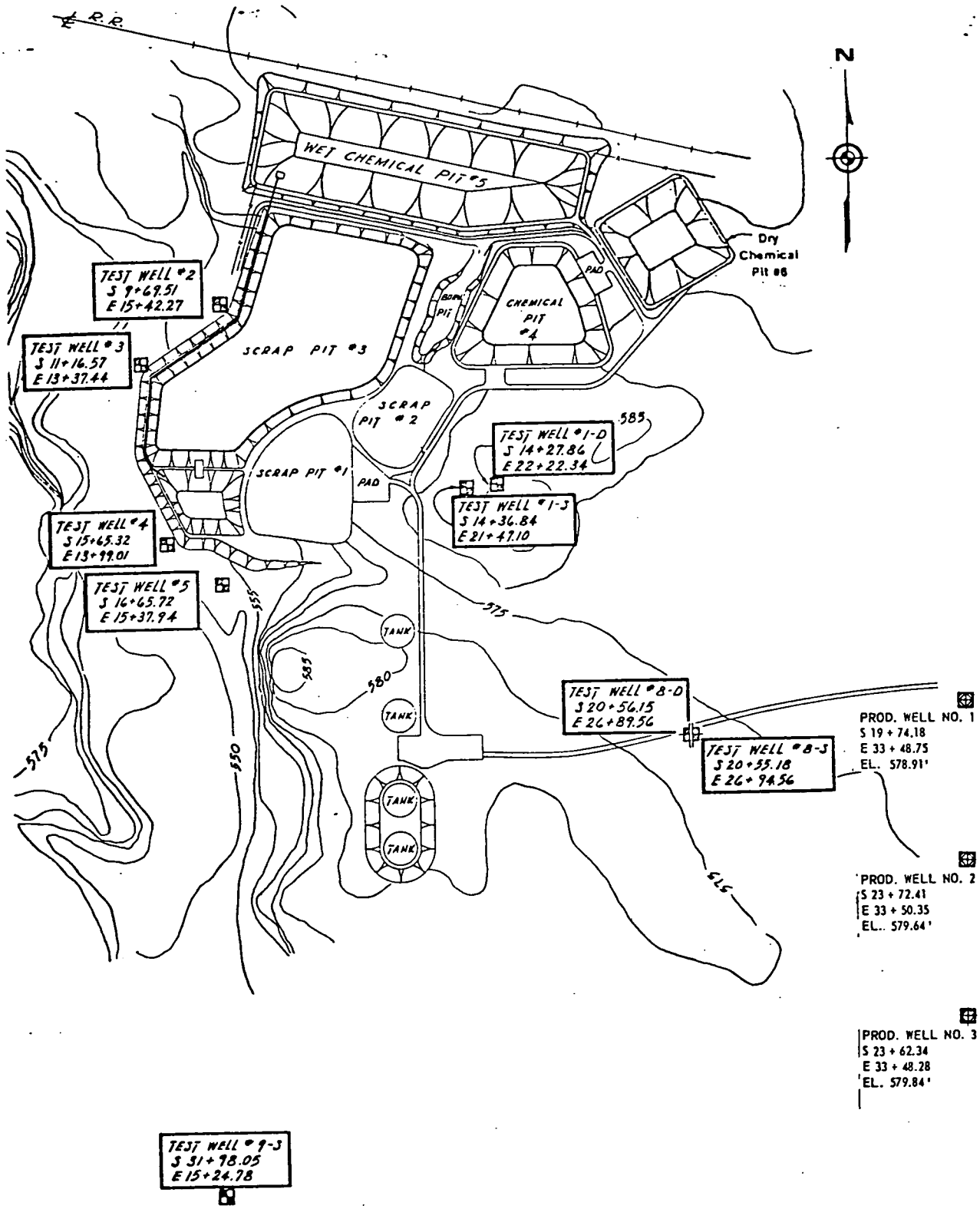

FIGURE 13 Test Well Locations