6286 U-003-307 .20

PENNAK, A.F., FEED MATERIALS PRODUCTION CENTER RAIDOACTIVE WASTE MANAGEMENT PLAN, REV. 2, - (USED AS A REFERENCE IN OU1 RI)

06/16/75

NLCO-1100
NLO DOE-FN
50
REPORT

ORO-723 (FMPC)
(Rev. 6-16-75)

6286

labeled new

RADIOACTIVE WASTE MANAGEMENT PLAN

FEED MATERIALS PRODUCTION CENTER

NATIONAL LEAD COMPANY OF OHIO
P. O. Box 39158
Cincinnati, Ohio 45239

FEED MATERIALS PRODUCTION CENTER

286

RADIOACTIVE WASTE MANAGEMENT PLAN

Revision 2

Prepared by

A. F. Pennak

APPROVED

for C. R. Chapman, Manager

NATIONAL LEAD COMPANY OF OHIO
P. O. Box 39158
Cincinnati, Ohio 45239

Contract No. E-(30-1)-1156

Revised: June 16, 1975

UNITED STATES ENERGY RESEARCH AND DEVELOPMENT ADMINISTRATION
OAK RIDGE OPERATIONS OFFICE

Page No.

FIGURES AND TABLES

Fig. 1	- Area Map Showing Relative Locations	2
2	- Schematic Diagram of the FMPC Process	4
3	- Waste Treatment and Storage Locations Perimeter Air Sampler Locations	5
4	- Production Area Waste Treatment Locations	6
5	- Liquid Waste Flow Diagram	8
6	- General Sump Flow Diagram	10
7	- Test Well Locations	17
8	- Water Sampling Locations.	20
9	- Waste Water Quality Report.	21
Table I	- ERDA Solid Waste Management Questionnaire	26
Table II	- Target Date for Management of Radioactive Liquid Wastes	33

TABLE OF CONTENTS

	Page No.
Introduction.	1
1.0 Program Administration.	1
1.1 Site	1
1.2 Responsible ERDA Area Office	1
1.3 ERDA Contractors	3
1.4 Responsible ERDA Staff Member.	3
1.5 Funding of Waste Management Activities	3
2.0 Description of Waste Generating Processes	3
3.0 Waste Management Facilities	3
3.1 Identification and Location of Facilities. . . .	3
3.2 Description of Waste Treatment Facilities. . . .	7
3.2.1 Solid Wastes.	7
3.2.2 Liquid Wastes	7
3.3 Waste Storage Facilities	14
3.3.1 K-65 and Metal Oxide Tanks.	14
3.3.2 Chemical Waste Pits	14
3.4 Effluent Control Systems	18
3.4.1 Liquid Waste Control.	18
3.4.2 Airborne Radioactive Wastes	22
3.5 Site Administrative Limits for Radioactivity in Effluents	22
4.0 Radioactive Wastes Stored	24
4.1 High-Level Waste	24
4.2 Solid Radioactive Waste.	24
4.3 Other Radioactive Wastes	25
4.3.1 K-65 Tanks.	28
4.3.2 Metal Oxide Tanks	28
4.3.3 Wet Chemical Waste Pits	29

Page No.

5.0 Plans and Budget Projections. 29

5.1 Interim Storage of High-Level Liquid Waste Generated by ERDA Reprocessing Plants 30

5.2 Long-Term Storage of High-Level Liquid Waste . . . 30

5.3 Management of Low-Level Liquid Waste 30

5.3.1 Summary and Milestone Charts. 30
5.3.2 Accomplishments in FY 1976. 34
5.3.3 Program and Accomplishments in FY 1976A and FY 1977. 35
5.3.4 Program and Accomplishments, FY 1978-1983 . 35

5.4 Management of Solid Waste Contaminated with Radioactivity 36

5.5 Management of Airborne Radioactive Waste 36

5.6 Summary Tabulation of Budget Projections for Radioactive Waste Management Activities . . . 37

6.0 Description of Decontamination and Decommissioning. . . 38

6.1 Radioactively Contaminated Facilities. 38
6.2 Degree of Radioactive Contamination 39
6.3 Recommendations for Conversion 39
6.4 Other Radioactive Materials. 39

Bibliography 40

INTRODUCTION

This document presents the site waste management plan of the Feed Materials Production Center. It sets forth the site plans for controlling releases of radioactivity and ensuring the safe storage of radioactive wastes generated by past, present and future site operations.

1.0 Program Administration

1.1 Site

The Feed Materials Production Center (FMPC) is located near Fernald in the Great Miami River Valley in southwestern Ohio, approximately 10 miles northwest of Cincinnati.

The plant proper occupies 136 acres in the center of a 1,050 acre site. Most of the site, including all of the production plant area, is located within Hamilton County, Ohio, but approximately 200 acres are in southern Butler County. The villages of Fernald, New Baltimore, Ross, and Shandon are all located within a few miles of the plant. Hamilton, Ohio is approximately 10 miles northeast.

Figure 1 shows the relative location of these populated areas to the FMPC.

1.2 Responsible ERDA Area Office

Oak Ridge Operations Office

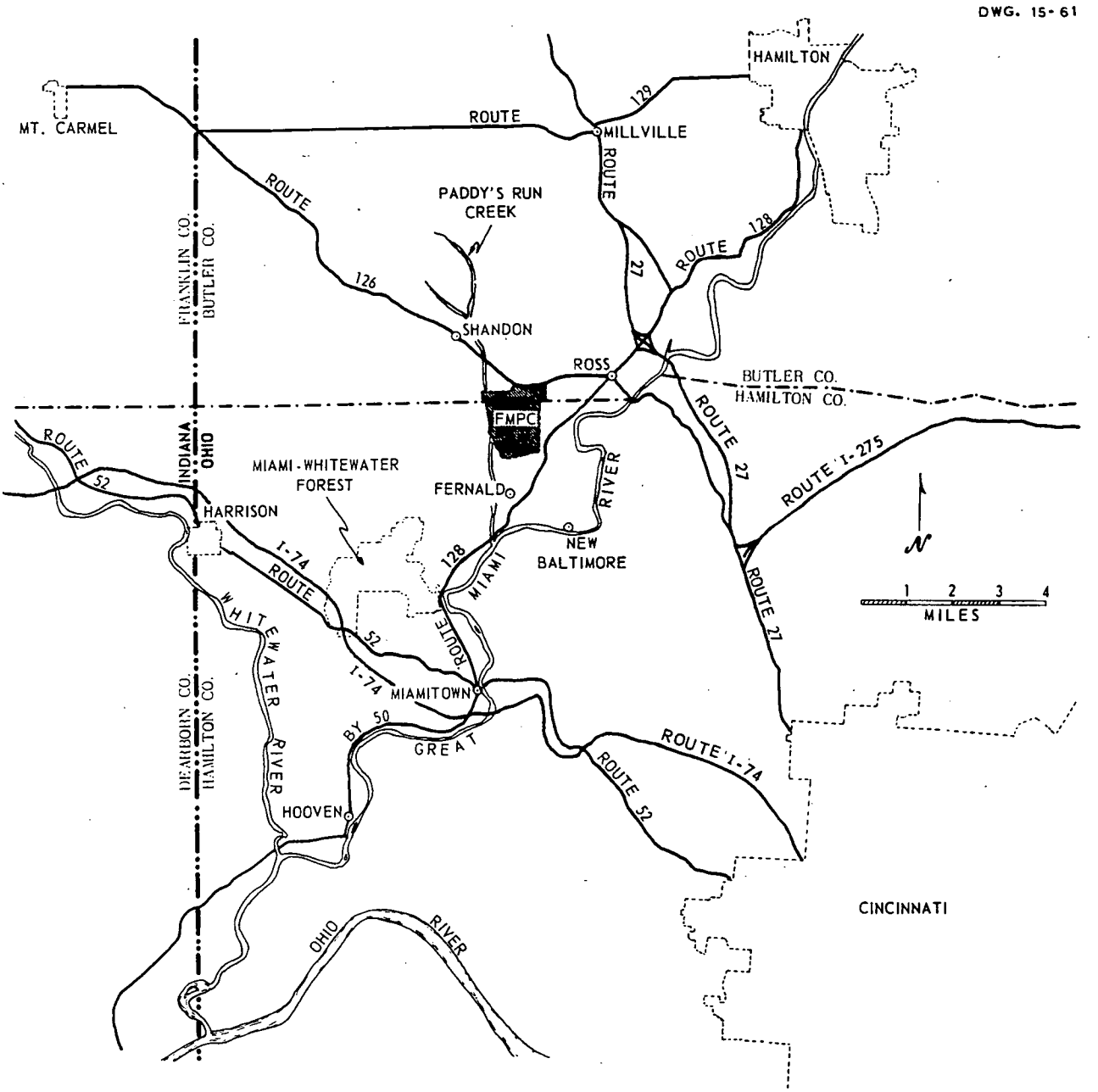

FIGURE 1 Area Map Showing Relative Locations

1.3 ERDA Contractors

The National Lead Company of Ohio under Contract No. E-(30-1)-1156 is responsible for all operations, including waste management activities, at FMPC.

1.4 Responsible ERDA Staff Member

E. H. Hardison, Waste Management Branch, ORO

1.5 Funding of Waste Management Activities

Waste management activities at FMPC are collectively funded with all other operations under the control of the Uranium Enrichment Operations Division, Oak Ridge Operations Office.

2.0 Description of Waste Generating Processes

A flow chart of the FMPC production processes and the major waste streams is shown in Figure 2. Additional descriptive details of the FMPC production processes are available in the Radioactive Waste Management Plan, Rev. 1, June 17, 1974, the NLO Nuclear Material Management Manual, and the NLO Accounting Manual, Sect. 304.04.

3.0 Waste Management Facilities

3.1 Identification and Location of Facilities

The location of waste treatment and waste storage facilities at FMPC is shown in Figure 3. Figure 4 is a plan of the production area, an aid in locating various production plants and waste treatment facilities within the area.

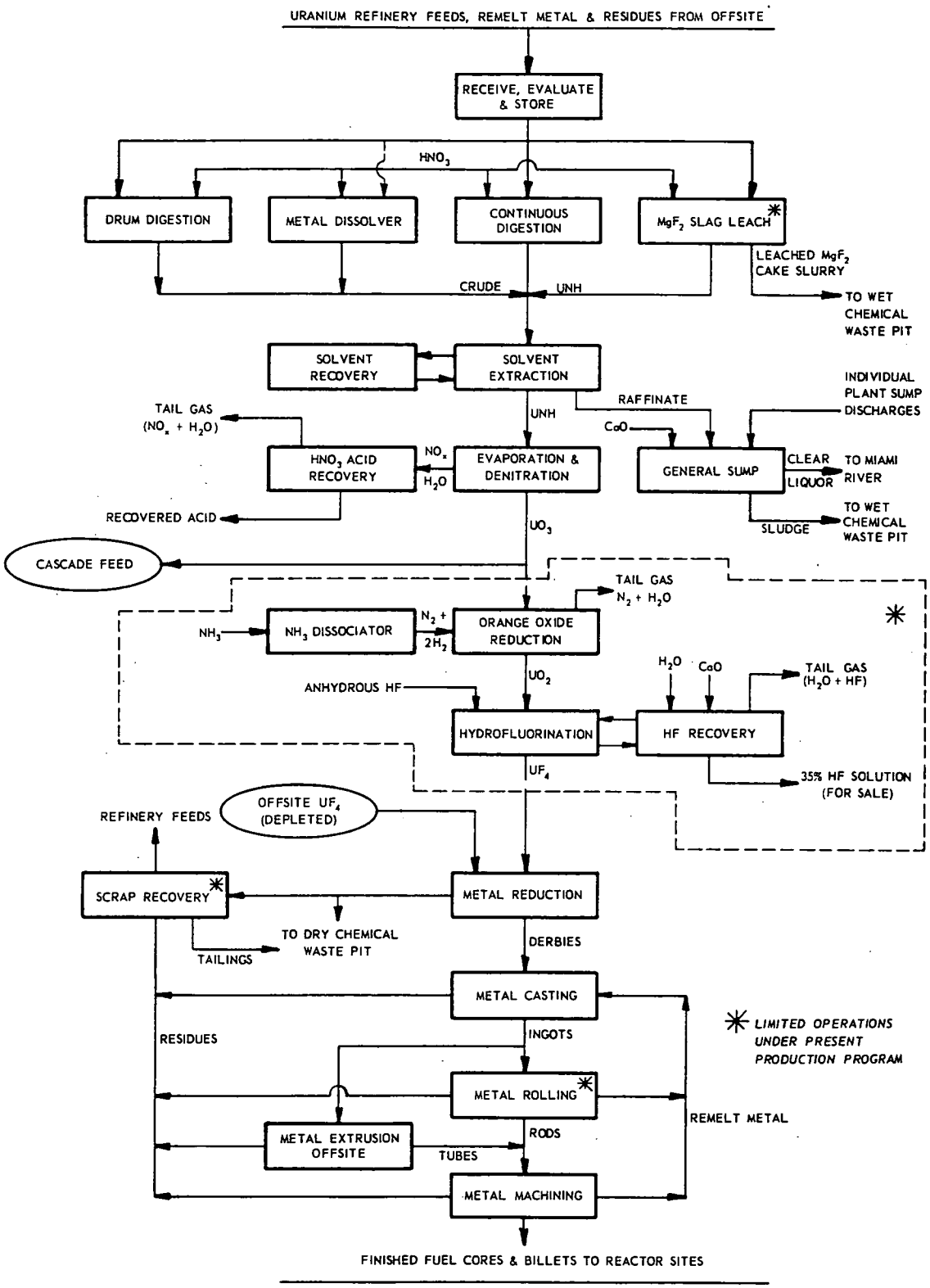

FIGURE 2 Schematic Diagram of the FMPC Process

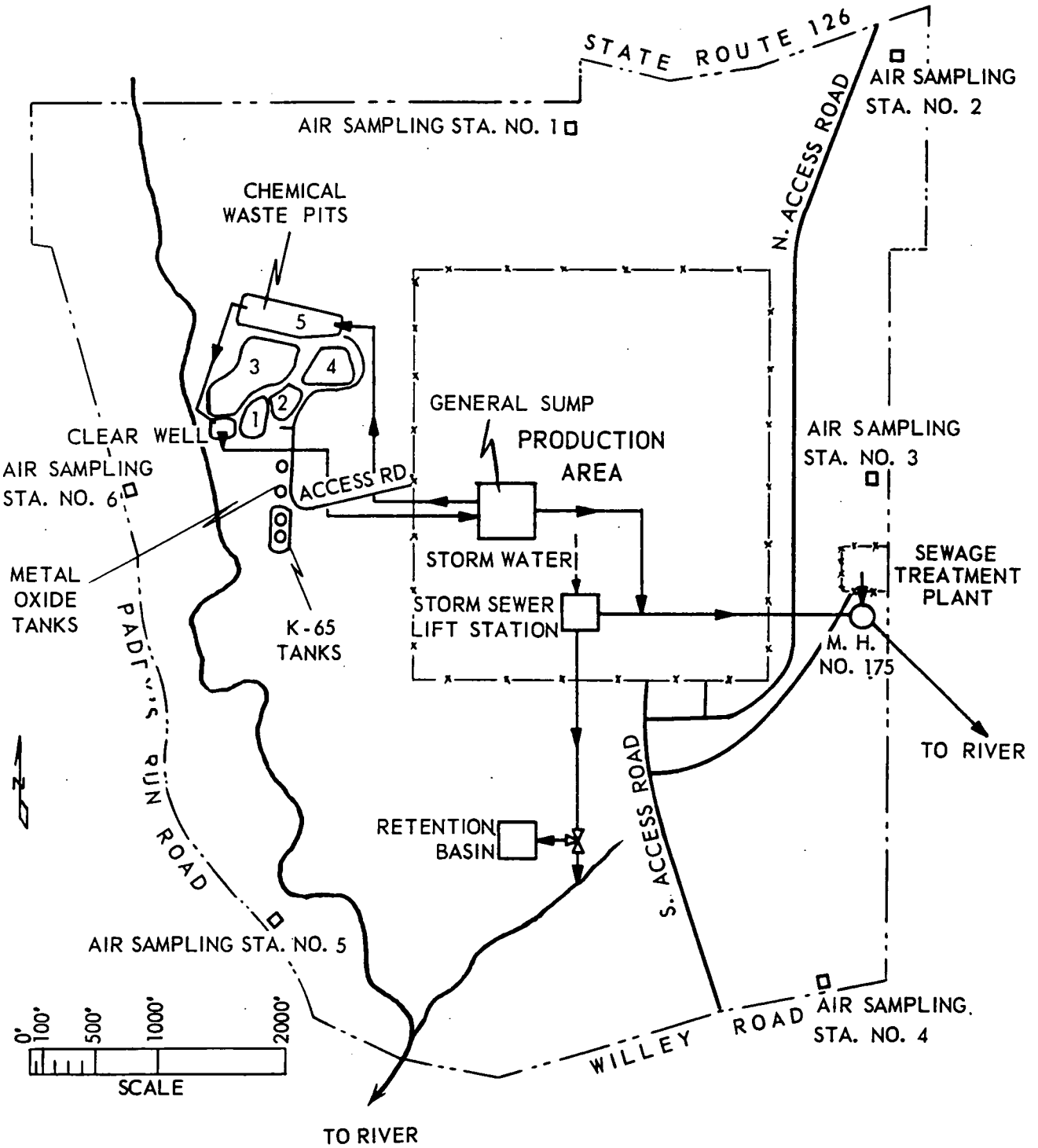

FIGURE 3 Waste Treatment, Storage Locations, and Perimeter Air Sampling Locations

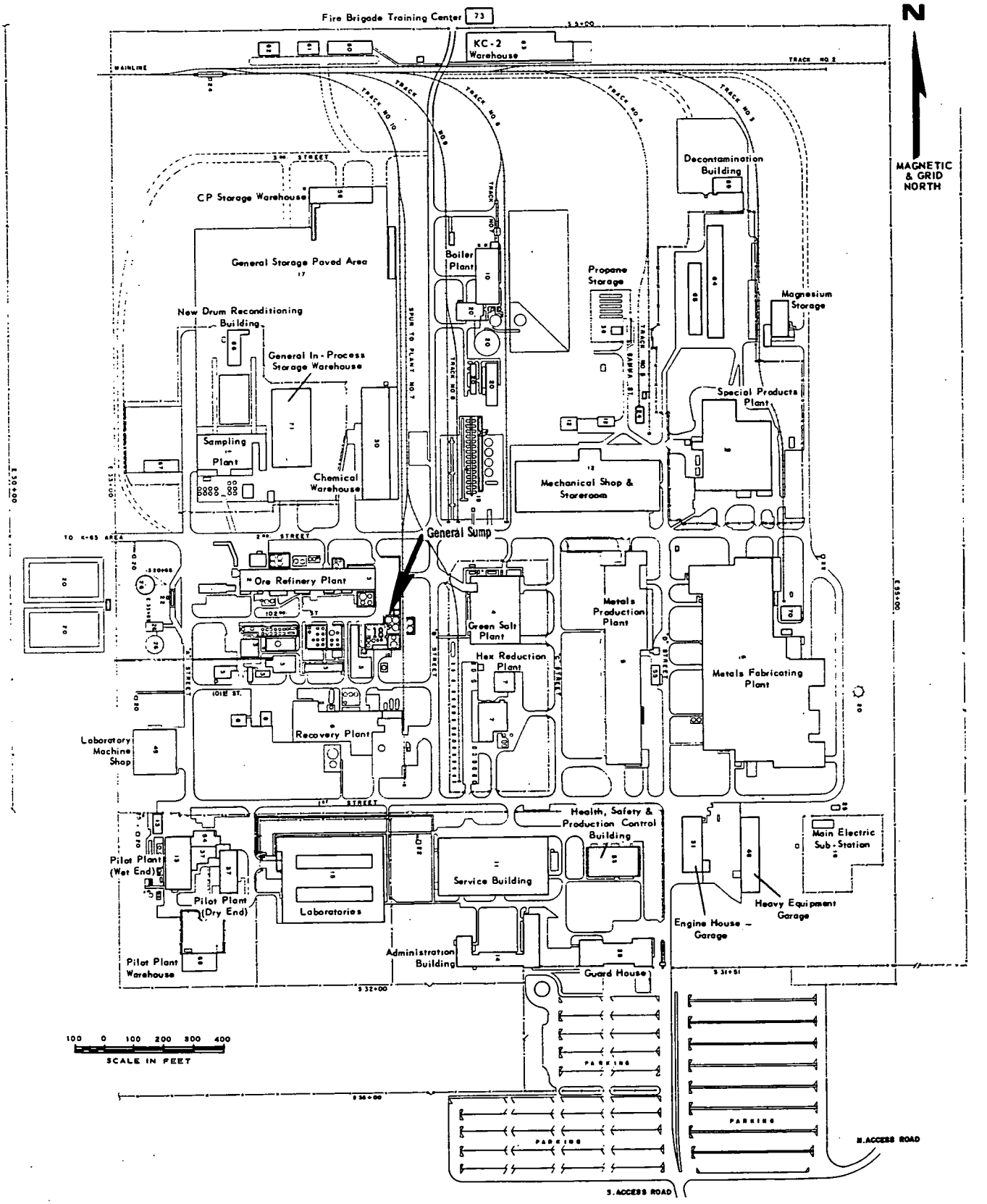

FIGURE 4 Production Area Waste Treatment Locations

3.2 Description of Waste Treatment Facilities

Solid and liquid radioactive wastes are generated at FMPC. The facilities for handling each type of waste are discussed separately hereafter.

3.2.1 Solid Wastes

No facilities exist at FMPC for treatment of solid radioactive wastes as such. Solid wastes generated at FMPC are discarded without treatment to a storage pit. The uranium or thorium content of these wastes is regarded as below economic recovery levels.

Contaminated combustible residues, sewage sludge, graphite, and oils are treated as process residues and incinerated in various facilities. The uranium values are recovered from the generated ash in the Recovery Plant or the Refinery.

3.2.2 Liquid Wastes

Liquid wastes are generated to some degree in every operation at FMPC. The three branches of the liquid waste stream are: process waste, sanitary sewage, and storm water. The system to control the discharge of radioactive wastes to the environment through any of the branches of the liquid waste system is shown in Figure 5.

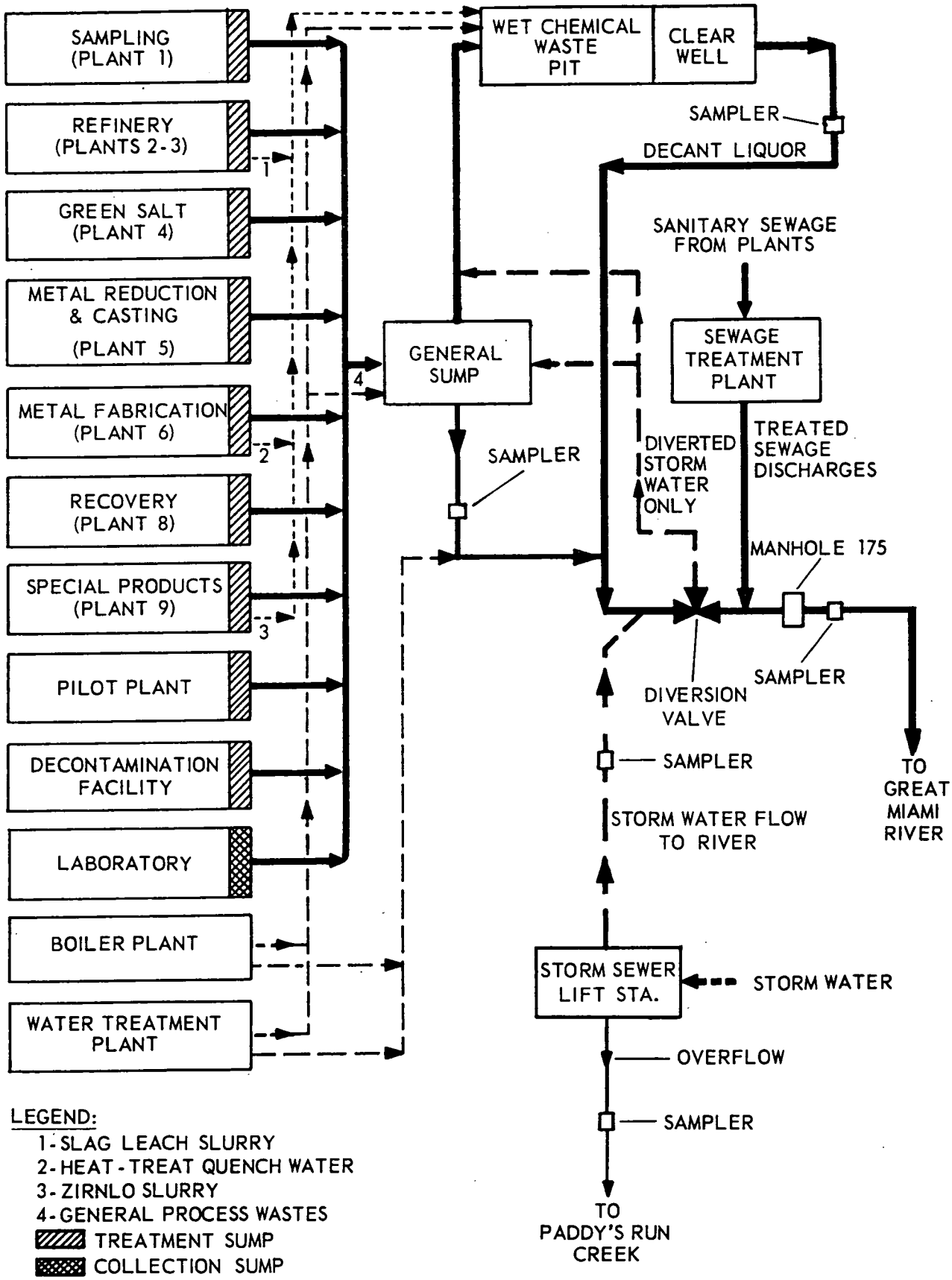

FIGURE 5 Liquid Waste Flow Diagram

3.2.2.1 Process Waste

3.2.2.1.1 Plant Treatment Facilities

All of the major process areas have individual treatment facilities capable of pretreating the liquid wastes that are peculiar to that particular process step. In these plant treatment units, virtually all of the radioactive materials in the wastes are removed as filter cake processed for recovery of U values. The filtrate produced is sent to the General Sump. A more detailed description of these process area treatment facilities is available in the Radioactive Waste Management Plan, Rev. 1, June 17, 1974.

3.2.2.1.2 General Sump

A simplified flow diagram of the General Sump is shown in Figure 6.

Physically the General Sump is a collection of vertical tanks of various sizes, pumps, piping, and valves established on a controlled

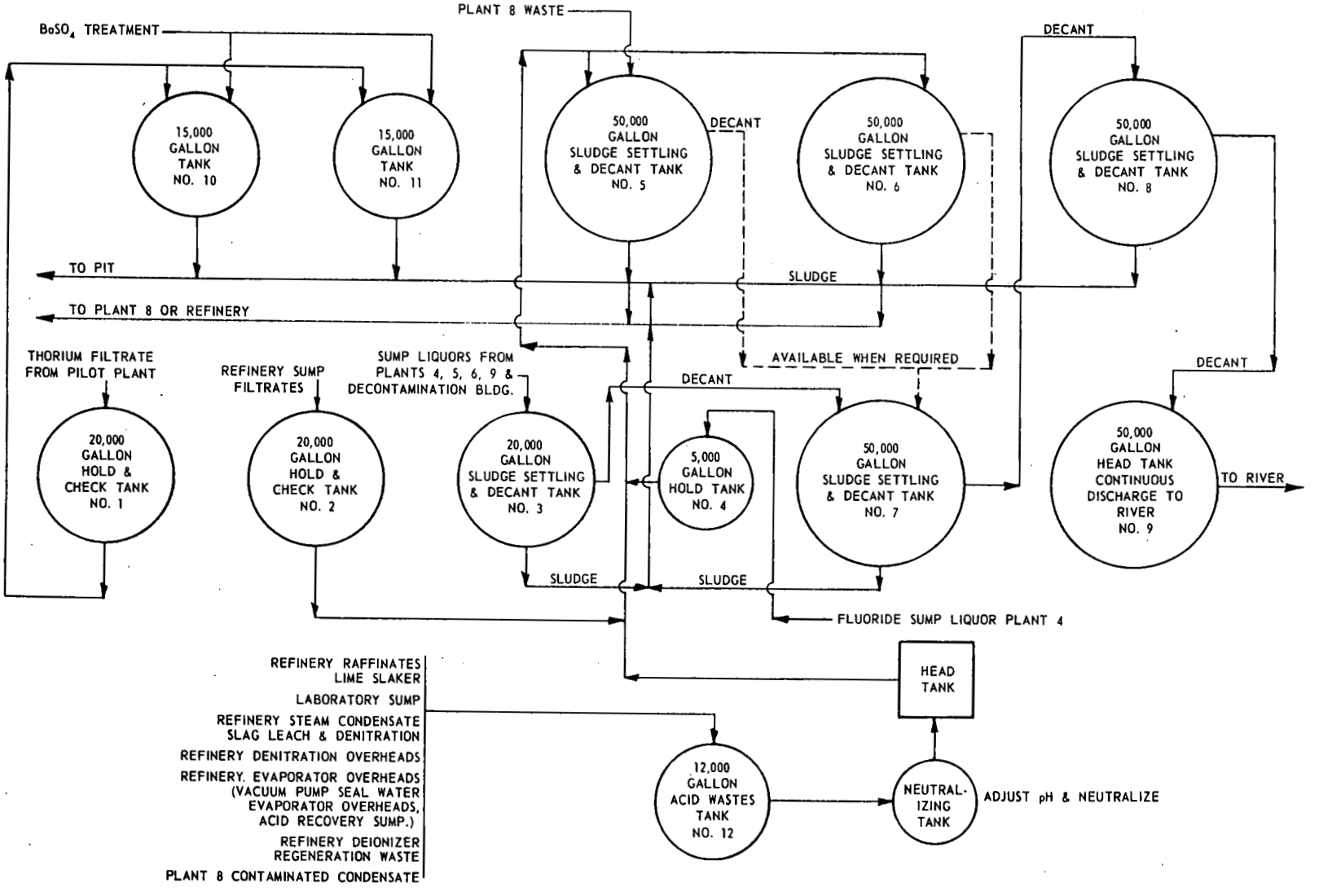

FIGURE 6 General Sump Flow Diagram

000015

6286

pad. It is designed to facilitate the storage and transfer of liquid wastes within the tankage complex and the discharge therefrom, and the addition of various reagents and coagulation aids. Provisions have been made for ease of sampling, both grab and continuous. Controls are simple but adequate. The pad is equipped with its own sump and drainage trenches to handle any leaks or accidental spills.

The process wastes from the various production plants and service facilities are received at the General Sump, checked for SS content, and segregated or selectively combined as required. If a certain waste exceeds discard specifications it is sent to the Refinery for recovery of SS values.

Acidic raffinates from the refinery extraction process are segregated, neutralized with CaO, and filtered. The filter cake, now regarded as solid waste, is deposited in Pits 3 and 4.

Most other uranium-bearing wastes are adjusted for pH with calcium oxide to obtain a maximum precipitation of radioactive material, combined with the filtrate from the raffinate treatment and settled and decanted in successive steps prior to discharge of the supernatant liquor to the river. The settled sludges remaining are combined as required with the neutralized raffinate and filtered.

Certain liquid wastes, regarded as not suitable for direct discharge to the river, are segregated and pumped to the Wet Chemical Waste Pit.

All liquid wastes, before discharge from the General Sump to the Wet Chemical Waste Pit or to the Miami river are sampled. The samples are analyzed to ascertain concentrations and total content of radioactive materials.

3.2.2.1.3 Wet Chemical Waste Pit

The Wet Chemical Waste Pit (Pit 5) is a large rubber lined settling basin located northwest of the production area. It is roughly rectangular in shape, with a surface area of approximately 3.6 acres. Capacity is approximately 21,000,000 gallons;[1] however, it is essentially full and its functional capability as a settling basin is minimal.

Any liquid wastes discharged to the Wet Chemical Waste Pit enter at the eastern or smaller end of the basin. Supernatant liquor overflows through an effluent control tower near the western end of the pit into a clearwell from which it is pumped to the Miami River.

3.2.2.2 Sanitary Sewage

The sanitary waste collection and treatment system is completely separated from the process waste system. Uranium contamination occurs

[1] NLO Drawing No. 21X-5500-G-00196

only through the plant laundry and showers; however, most of the uranium is removed in the normal sanitary sewage treatment and captured in the sludge.

3.2.2.3 Storm Water

Though basically uranium free, it is possible for uranium to enter the storm water system through accidental spills. Control and recovery of such spills is made possible through diversion facilities provided.

3.3 Waste Storage Facilities

The three facilities at FMPC used for the long term storage of wastes are the Chemical Waste Pits, the K-65 Tanks, and the Metal Oxide Tanks.

3.3.1 K-65 and Metal Oxide Tanks

There are two K-65 tanks and two metal oxide tanks, each of 125,000 c.f. capacity and constructed of post-tensioned concrete. Further details are available in the Radioactive Waste Management Plan, Rev. 1, June 17, 1974.

3.3.2 Chemical Waste Pits

Five chemical waste pits have been constructed at FMPC. These pits are identified by number based on a chronological sequence of their construction. They are further identified as "dry" or "wet" pits. This

distinction is made on the basis of the physical state of the material as it is placed in the pit. If the material is placed as a slurry, the pit is known as a wet pit. If the material is placed as a dry solid, the pit is known as a dry pit.

Pits No. 1 through No. 4 vary in depth from approximately 12 feet to 27 feet. The wall and bottoms of these pits were lined with 1.5 to 2 feet of impervious blue clay. Pit No. 5 is 29 feet deep and has a rubber membrane liner.

When a pit is filled with waste it is covered with earth as soon as the contained material has stabilized and is capable of supporting the earth burden.

The following table gives a description and status of each of the chemical waste pits.

Pit No.	Pit Type	Pit Volume (C.Y.)	Status
1	Dry	40,000	Filled and covered
2	Dry	13,000	Filled and covered
3	Wet	226,500	Filled - being covered
4	Dry	53,000	85% Filled
5	Wet	115,000	99% Filled

Pit No. 2 was built for a dry pit and primarily used as such; however, some wet materials were introduced into this pit just prior to the completion of Pit No. 3.

Pit No. 3 was filled with respect to its capability to function as a settling basin or wet pit, and has been partially covered. At present, dry or solid wastes (raffinate filter cake) are being deposited on Pit 3 to further utilize its capacity.

Pit No. 4 is also presently being used as a depository for raffinate filter cake in addition to the solid wastes customarily placed therein.

Test wells have been drilled around the Waste Pits to permit monitoring of ground water in the area. The location of these wells is shown in Figure 7. Sampling of these wells, performed on a monthly basis, furnishes an indication of the condition of the pit liners.

Nitrates and chlorides found in well samples in amounts slightly higher than background in past years indicated that the natural clay liners used in Pits No. 1 through No. 4 were not completely impervious; however, recent analyses show concentrations of these ions essentially at background levels. From this it is concluded that (1) permeation from Pits 1, 2, 3, and 4 through the clay linings has essentially ceased, and (2) if there are any losses of liquids with accompanying pollutants through the rubber lining of Pit 5, such

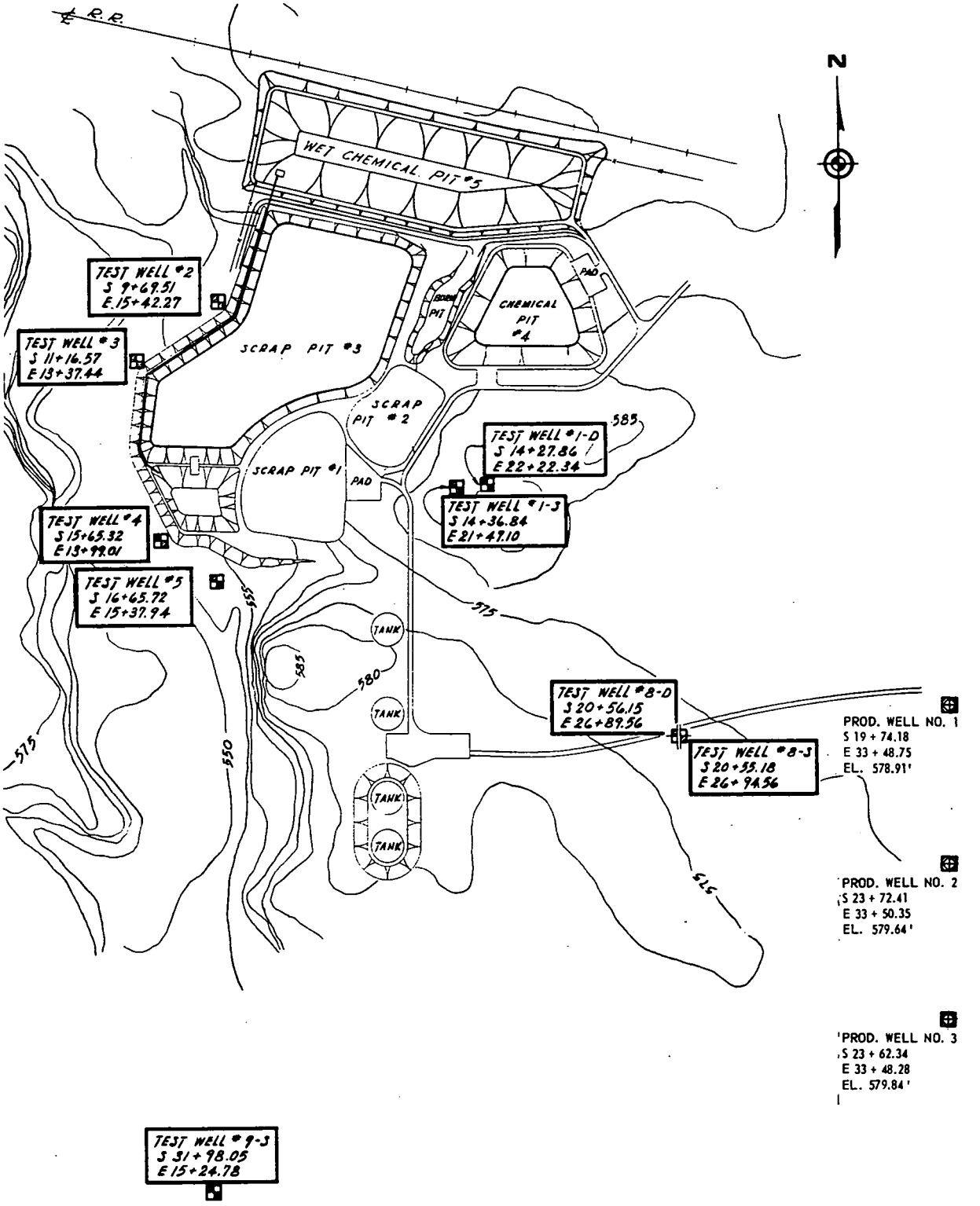

FIGURE 7 Test Well Locations

losses are not significant enough to affect the quality of the water in the subsurface aquifers. No increase in uranium or radioactivity has ever been detected in the test wells.

3.4 Effluent Control Systems

3.4.1 Liquid Waste Control

Liquid effluent streams from FMPC are released to the environment at two locations. These are:

1. The combined sewer outfall which discharges into the Great Miami River at a point almost directly east of the plant site. This point is 3½ river miles upstream from the village of New Baltimore.

2. The storm sewer outfall which discharges into a branch of Paddy's Run Creek on site. Paddy's Run Creek joins the Great Miami River approximately 2 miles south of the FMPC site and 1½ river miles downstream from New Baltimore. The flow of these streams is the only property that influences the dispersion of radionuclides in liquid effluents from FMPC.

A detailed discussion of receiving stream characteristics, storm water diversion capacity, process spill diversion capability, flow monitoring, and other aspects of the liquid waste effluent control system is available in the Radioactive Waste Management Plan, Rev. 1, June 17, 1974.

An offsite monitoring program is conducted to determine the effect of FMPC releases on the quality of the Miami River. The sampling locations that are used in implementing this program are shown in Figure 8. Daily samples are taken at Point W1 to give an indication of the quality of the water approaching the FMPC discharge. Point W2 is the continuous sampler at Manhole 175, the final access point on the waste effluent line prior to discharge to the river. Point W3 is located downstream from the FMPC discharge point. A continuous sample is withdrawn from the river at this point and analyzed no less frequently than once a week. A sample comparison provides an effective means of noting the effect of FMPC discharge on the river.

All data compiled with respect to discharge of radionuclides from Manhole 175 to the Miami River is tabulated as part of the Waste Water Quality Report, issued each month. The Report form is shown on Figure 9.

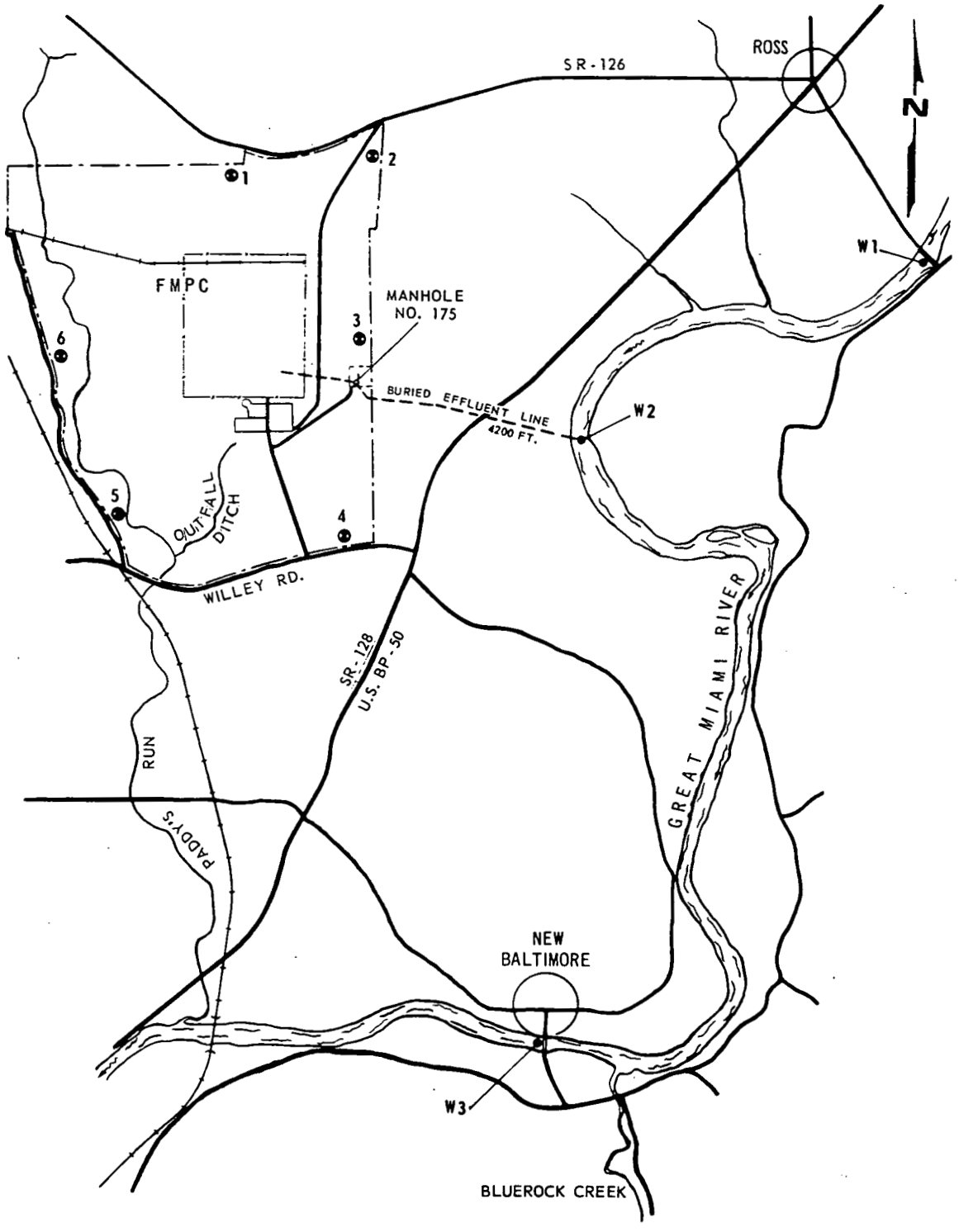

FIGURE 8 FMPC and Surrounding Area

BOUNDARY AIR SAMPLING STATIONS.
W1 & W3 - WATER SAMPLING LOCATIONS.
W2 - POINT OF PLANT DISCHARGE
SCALE: 1" = 3055'

NATIONAL LEAD COMPANY OF OHIO
HEALTH & SAFETY DIVISION

WASTE WATER QUALITY REPORT

For the Month of _____

DATE	GENERAL DATA: FLOWS: RIVER (CFS)	FLOWS: MH 175 (GAL. x 10^3)	WEATHER INFORMATION: AIR TEMPERATURE: MAX. (°F)	AIR TEMPERATURE: MIN. (°F)	PRECIP. (IN.)	CONDITION	RADIOACTIVITY & RADIOISOTOPE CONCENTRATIONS AT MANHOLE 175: TOTAL URANIUM (mg/l)	TOTAL THORIUM (mg/l)	TOTAL RADIUM 228 (d/m/ml)	TOTAL RADIUM 226 (d/m/ml)	GROSS BETA (d/m/ml)	GROSS ALPHA (d/m/ml)				
1																
2																
3																
4																
5																
6																
7																
8																
9																
10																
11																
12																
13																
14																
15																
16																
17																
18																
19																
20																
21																
22																
23																
24																
25																
26																
27																
28																
29																
30																
31																
AVG.																
PERMISSIBLE IN-STREAM CONCENTRATIONS				State of Ohio Regulations												
				AEC Manual Chapter 0524			59	9	0.066	0.066	[2]	[2]				

RECORDED DAILY AT 8:00 A.M.

DAILY TOTAL FLOW

RECORDED DAILY

RECORDED DAILY

RECORDED DAILY

RAIN OR SNOW AS OCCURS DAY TO DAY

ANALYZED DAILY FROM 24 HOUR COMPOSITE SAMPLE

ANALYSIS MADE ONCE PER MONTH FROM COMPOSITE OF DAILY 24 HOUR SAMPLES

ANALYSIS MADE TWICE PER MONTH FROM 15-DAY COMPOSITES OF DAILY 24 HOUR SAMPLES

ANALYSIS MADE TWICE PER MONTH FROM 15-DAY COMPOSITES OF DAILY 24 HOUR SAMPLES

ANALYZED DAILY FROM 24 HOUR COMPOSITE SAMPLE

ANALYZED DAILY FROM 24 HOUR COMPOSITE SAMPLE

NOTES: [2] *Applicable only when the radionuclides present are unknown.*

NLO-H&S-351 (REV. 12/19/72)

FIGURE 9 Waste Water Quality Report

000025

6286

21.

NATIONAL LEAD COMPANY OF OHIO
HEALTH & SAFETY DIVISION

WASTE WATER QUALITY REPORT

For the Month of _____

DATE	CHEMICAL CONSTITUENT CONCENTRATIONS AT MANHOLE 175													
	BARIUM (mg/l)	CHLORIDE AS Cl (mg/l)	CHROMIUM (mg/l)	CYANIDE (mg/l)	FLUORIDE AS F (mg/l)	NITRATE AS NO_3 (mg/l)								
1														
2														
3														
4														
5														
6														
7														
8														
9														
10														
11														
12														
13														
14														
15														
16														
17														
18														
19														
20														
21														
22														
23														
24														
25														
26														
27														
28														
29														
30														
31														
AVERAGE														
PERMISSIBLE IN STREAM CONC. Ohio	0.8	250	0.05	0.005	1.3	35								
PERMISSIBLE IN STREAM CONC. AEC														
PERMISSIBLE IN STREAM CONC. Other														

BARIUM: ANALYZED MONTHLY FROM COMPOSITE OF DAILY 24 HOUR SAMPLES

CHLORIDE AS Cl: ANALYZED DAILY FROM 24 HOUR COMPOSITE SAMPLE

CHROMIUM: ANALYZED TWICE PER MONTH FROM 24 HOUR COMPOSITE SAMPLE OF DAY CHOSEN

CYANIDE: ANALYZED MONTHLY FROM COMPOSITE OF DAILY 24 HOUR SAMPLES

FLUORIDE AS F: ANALYZED DAILY FROM 24 HOUR COMPOSITE SAMPLE

NITRATE AS NO_3: ANALYZED DAILY FROM 24 HOUR COMPOSITE SAMPLE

NLO-H&S-351 (REV. 12/19/72)

FIGURE 9 (Continued)

000026

6286

21a.

NATIONAL LEAD COMPANY OF OHIO
HEALTH & SAFETY DIVISION

WASTE WATER QUALITY REPORT

For the Month of _____

DATE	PHYSICAL CHARACTERISTICS													
	WATER TEMPERATURE AT MH 175		DISSOLVED SOLIDS (mg/l)					FECAL COLIFORMS AT MH 175 (NO./100ml)	DISSOLVED OXYGEN AT MH 175 (mg/l)	ORGANIC MATERIAL[1] AT MH 175 (mg/l)	pH AT MH 175	FILTERABLE SOLIDS AT MH 175 (mg/l)		
	DAILY MAXIMUM (°F)	TIME RECORDED	CLEAR WELL	DECANT FROM GEN. SUMP TO RIVER	SEWAGE PLANT DISCHARGE	PUMPED STORM WATER FLOW	MH 175							
1														
2														
3														
4														
5														
6														
7														
8														
9														
10														
11														
12														
13														
14														
15														
16														
17														
18														
19														
20														
21														
22														
23														
24														
25														
26														
27														
28														
29														
30														
31														
AVG.														
PERMISSIBLE IN STREAM CONC. Ohio	Jan. <50° Feb. <50°	July <90° Aug. <90°					4	<200 (MO. GEOM. MEAN)	≥5.0 Avg. ≥4.0 Min.	5	≥6.0 but ≤9.0			
AEC	Mar. <60° Apr. <70°	Sept. <90° Oct. <78°												
Other	May <80° June <90°	Nov. <70° Dec. <57°[2]										100[3]		

ANALYZED DAILY FROM 24 HOUR COMPOSITE SAMPLE

RECORDED DAILY ON BASS OF MOST REPRESENTATIVE READING 24 HOUR COMPOSITE SAMPLE

ANALYZED MONTHLY FROM COMPOSITE OF DAILY 24 HOUR SAMPLES

ANALYZED DAILY FROM GRAB SAMPLE (VARIED TIMES OF DAYS)

ANALYZED ONCE PER WEEK FROM SELECTED DAY'S COMPOSITE SAMPLE

ANALYZED DAILY FROM 24 HOUR COMPOSITE SAMPLE

ANALYZED WEEKLY FROM COMPOSITE OF DAILY SAMPLES FOR WEEK

ANALYZED DAILY FROM COMPOSITE SAMPLE DURING PERIOD OF DECANT

ANALYZED DAILY FROM 24 HOUR COMPOSITE SAMPLE

RECORDED DAILY

RECORDED DAILY

NOTES: [1] *Includes all material soluble in ligroin, B.P. 38-50°C;* [2] *Temperature limits are State of Ohio Regulations;* [3] *NLO Concentration Guide for limit in the effluent.*
[4] *1500 mg/l, total, or 150 mg/l from human activities.*

NLO-H&S-351 (REV. 12/19/72)

FIGURE 9 (Continued)

000027

6286

21b.

3.4.2 Airborne Radioactive Wastes

All radioactive dusts, fumes, mists, etc. emanating from production processes at FMPC are vented to the atmosphere only after passing through collection devices such as bag collectors, electrostatic precipitators, and scrubbing towers. Each installation is specially designed for the operation it serves.

Continuous stack samplers monitor the performance of dry air cleaning systems and grab sampling is used to evaluate efficiencies of wet scrubbers.

In addition to these controls, an environmental air sampling program is employed to determine the amount of radioactive material in the air surrounding the project. Six permanent air sampling stations are operated around the perimeter of FMPC, located as shown on Figure 3. These samplers are in continuous operation. The samples are collected and analyzed each week. Results show that the average concentration of radioactive materials in the air surrounding FMPC is less than 1% of the MPC for uncontrolled areas.

3.5 Site Administrative Limits for Radioactivity in Effluents

Administrative limits have been established for the following radioactive components in liquid effluents released to streams and settling basins:

a. Uranium and thorium in releases from the General Sump to the Wet Chemical Waste Pit.

b. Uranium, radium, and total alpha and beta radioactivity in releases from the General Sump directly to the Miami River.

For solid radioactive waste materials placed in the on-site storage pit the uranium and thorium discard limits for each residue type are based upon economic considerations. Disposition of residues is specified in Standard Operating Procedures.

Numerical administrative limits for radioactive components in atmospheric releases and in releases of combined liquid effluent to the Miami River have not been established. Instead the "lowest practicable" concept is employed, but no radionuclide which is present is to exceed the concentration guide in Table II of ERDAM 0524.[2]

Additional details and information on application of site administrative limits for radioactivity in effluents is available in the Radioactive Waste Management Plan, Rev. 1, June 17, 1974 and in Reference 2, below.

[2]Letter, Operating Limits - Radioactive Materials Released to the Environment, M. S. Nelson (NLO) to J. A. Lenhard (ORO-AEC), May 6, 1974.

4.0 Radioactive Wastes Stored

The radionuclides encountered at FMPC are basically uranium, thorium, and the radioactive daughters of each. The processing of small quantities of recycle compounds does introduce other radionuclides such as plutonium, neptunium, ruthenium, technetium, etc. Technetium and ruthenium are present in FMPC effluent in detectable quantities but always below ERDA concentration guides for water in uncontrolled areas. The other TRU radionuclides are present in only trace quantities and therefore do not cause any problems or require any additional treatment in the handling of wastes.

4.1 High-level Waste

No high level wastes are stored at FMPC.

4.2 Solid Radioactive Waste

There are four principal types of solid wastes generated at the present time at FMPC which are discharged without treatment to Chemical Pit No. 4. They are:

(a) Depleted Uranium Residues - Process residues of depleted uranium (0.142 - 0.40% ^{235}U) that are not suitable for remelt or containing uranium values in amounts not economical for recovery.

(b) Low Grade Thorium Residues - Process residues that similarly cannot be economically processed for recovery of thorium values.

(c) Contaminated Ceramics - Slightly contaminated refractories from production electric furnaces discarded during repairs.

(d) General Refuse - Various types of trash, generally noncombustible, which have become slightly contaminated through incidental contact with radioactive substances.

In addition to the above, filter cakes resulting from the filtration of neutralized raffinate, General Sump sludges, and recycled slurries from Wet Chemical Waste Pit No. 5 are also being discarded into Pits Nos. 3 and 4.

Before discard all of these wastes are reviewed to determine that they are of a nature which when deposited in the pits will not present a water pollution problem.

Existing solid waste storage and estimated future generation is tabulated in Table I, representing Part I of the ERDA Solid Waste Management Questionnaire. Part II of the ERDA Solid Waste Management Questionnaire is not included as not being applicable to FMPC.

4.3 Other Radioactive Wastes

The major radioactive wastes other than solid wastes stored or accumulated at FMPC are the residues of ore concentrate processing. These wastes are stored in the K-65 tanks, the metal oxide tanks, and the wet chemical waste pits.

TABLE I

ERDA SOLID WASTE MANAGEMENT QUESTIONNAIRE

	FY-1974		FY-1975		FY-1976		FY-1976A	FY-1977
	July-Dec.	Jan.-June	July-Dec.	Jan.-June (1)	July-Dec.	Jan.-June		
1. Generating Organization								
FMPC - Fernald								
2. Generation Rate (ft^3)								
U Contaminated	6,751	5,885	6,680	100,000(2)	100,000(2)	100,000(2)	35,000	40,000
Thorium Contaminated	651	181	619	761	700	700	200	1,500
Total	7,402	6,066	7,299	100,761	100,700	100,700	35,200	41,500
3. Volume (ft^3) Treated								
No treatment performed on solid waste								
4. Storage/Burial								
Location - FMPC								
Acreage Utilized	--	--	--	--	--	--	--	2.0
Cumulative	7.25	7.25	7.25	7.25	7.25	7.25	7.25	9.25
Volume Buried/Stored (ft^3)								
U Contaminated	6,751	5,885	6,680	100,000	160,000(3)	160,000(3)	40,000	60,000
Cumulative	2,512,714	2,518,599	2,525,279	2,625,279	2,785,279	2,945,279	2,985,279	3,845,279
Thorium Contaminated	651	181	619	761	700	700	200	700
Cumulative	51,530	51,711	52,330	53,091	53,791	54,491	54,691	55,391
Total	7,402	6,066	7,299	100,761	160,700	160,700	40,200	60,700
Cumulative	2,564,244	2,570,310	2,577,609	2,678,370	2,839,070	2,999,770	3,039,970	3,100,670
Total Curies as Buried	22	21	16	17	18	18	5	4
Cumulative Curies as Buried	814	835	851	868	886	904	909	913
Cumulative Curies with Decay Correction	814	835	851	868	886	904	909	913

(1) Estimated Total, Based Upon: 4 Months Actual Data
5th & 6th Months Estimated

(2) Includes filter cake from raffinate and sludge formerly handled as a slurry and not regarded as a solid waste

(3) Includes filter cake from Pit 5 sludges formerly carried as a wet slurry and not regarded as a solid waste

000032

6286

TABLE I (cont'd)

ERDA SOLID WASTE MANAGEMENT QUESTIONNAIRE

	FY-1974 July-Dec.	FY-1974 Jan.-June	FY-1975 July-Dec.	FY-1975 Jan.-June (1)	FY-1976 July-Dec.	FY-1976 Jan.-June	FY-1976A	FY-1977
4. Storage/Burial (cont'd)								
Estimated Range for Packages								
Not Applicable								
Estimated Typical Value for Packages								
Not Applicable								
Principal Contributors of Activity (Nuclide)								
Total Th (Kg)	569	1,313	766	784	800	800	200	800
Cumulative	59,382	60,695	61,461	62,245	63,045	63,845	64,045	64,845
Total U (Kg)	66,957	62,108	47,171	47,200	50,000	50,000	15,000	12,000
Cumulative	2,422,768	2,484,876	2,532,047	2,579,247	2,629,247	2,679,247	2,694,247	2,706,247

	FY-1974	FY-1975	FY-1976	FY-1976A	FY-1977
5. Unit Costs ($/ft^3)					
For Treated Wastes					
No Treatment					
For Untreated Wastes					
Packaging and Handling Off Site Shipment	$4.50	None Shipped	No Shipments Anticipated	No Shipments Anticipated	No Shipments Anticipated
For All Solid Wastes					
Off Site Freight Shipping Charges	.71	N/A	N/A	N/A	N/A
Storage/Burial Off Site	.80	N/A	N/A	N/A	N/A
On Site Storage Shipping Charges	.06	N/A	N/A	N/A	N/A
Storage on Site	N/A	N/A	N/A	N/A	N/A

000033

27-6286

4.3.1 K-65 Tanks

The inventory of material stored in the K-65 tanks is as follows:

Description	Total Waste (Lbs)	S.S. Content (Lbs)
Australian Ra Cake	380,451	606
K-65 (Radium bearing from pitchblende ores)	19,004,675	24,121
Total	19,385,126	24,727

Estimated volume of material stored in the K-65 tanks is 195,000 c.f. The total radioactivity is estimated to be 2.0×10^3 µCi/Kg.

All of this material is the property of the African Metals Corporation and is being stored at FMPC under an agreement with the Energy Research and Development Administration.

4.3.2 Metal Oxide Tanks

The inventory of material stored in the Metal Oxide Tanks is as follows:

Description	Total Waste (Lbs)	S.S. Content (Lbs)
Metallic Oxides (Residues from ore concentrates)	3,989,288	39,627

Estimated volume of material stored in Metal Oxide Tanks is 125,000 c.f. The total radioactivity is estimated to be $.013 \times 10^3$ µCi/Kg.

4.3.3 Wet Chemical Waste Pits

Chemical Waste Pit No. 3 was used for a retention or settling basin for liquid effluent and slurries, and contains the solids dropped out in the settling process. The useful life of this Pit as a settling basin has been exhausted.

Chemical Waste Pit No. 2, although used primarily as a dry pit for storage of solid wastes, also contains a small amount of residues similar to the material in Pit No. 3.

Chemical Waste Pit No. 5 was also used as a settling basin, accumulating similar materials.

A tabulation of sludges and settled solids in settling basins at FMPC is as follows:

Est. Volume (c.y.)	S.S. Content (Kg)	Total Radioactivity
314,800	201,000*	67.0 Ci

*Statistical to April 30, 1975 plus estimated for May and June 1975.

5.0 Plans and Budget Projections

There are no operating funds specifically designated for waste management activities at FMPC. Wastes are handled as part of the normal operations incidental to the production program at FMPC.

5.1 Interim Storage of High-level Liquid Waste Generated by ERDA Reprocessing Plants

This section is not applicable to FMPC.

5.2 Long-Term Storage of High-level Liquid Waste

No high-level liquid wastes are generated or stored at FMPC.

5.3 Management of Low-Level Liquid Waste

5.3.1 Summary and Milestone Charts

FMPC already meets the FY 1976 goals indicated under Milestone 21 (Table B-1) in the PLANNING GUIDE FOR MANAGEMENT OF RADIOACTIVE LIQUID WASTES.

Soil columns have never been used at FMPC. Monitoring of liquid effluents at FMPC is efficient and leaves little to be desired. Diversion capacity exists.

Continuing efforts are under way to reduce radium and uranium in the liquid effluent although concentrations of both in the receiving stream meet ERDA concentration guides for waters in uncontrolled areas.

Process and equipment modifications and improvements as outlined hereafter will enable the continued maintenance of

(1) uranium losses through the liquid effluent streams at the practical minimum in line with the "as low as practicable concept" and

(2) total ^{228}Ra and ^{226}Ra discharges in the Manhole 175 effluent to the Great Miami River at levels within the 0.066 d/m/ml concentrations usually accepted as "drinking water" limits.

A major source of uranium in the combined liquid effluent stream is the storm sewer system. Because of the large drainage area covered, it is difficult to pinpoint the sources; however, a survey of the entire storm sewer utilizing two portable flow proportional samplers is being conducted. The data obtained will be used to isolate and eliminate, if possible, contributing sources of uranium in the storm sewer effluents.

To improve the capability of recovery of accidental uranium process spills, the diversion valve operation is being motorized with completion projected shortly.

The best available and acceptable effluent treatment process for removal of the soluble uranium in the concentrations present in the process effluents appears to be reverse osmosis. The applicability of R/O to process effluent treatment is under review.

The presently used treatments for removal of radium continue to be effective in restricting concentrations of ^{228}Ra and ^{226}Ra in final discharge effluents below 0.066 d/m/ml, the ERDAM-0524 Concentration Guide for these nuclides in waters in uncontrolled areas. Reverse osmosis appears to offer a viable substitute. It and other methods are under study for ^{226}Ra removal in conjunction with removal of uranium and other non-radioactive soluble pollutants.

See Table II for summary of target dates for Management of Low-Level Liquid Wastes on Page 33.

TABLE II TARGET DATES FOR MANAGEMENT OF RADIOACTIVE LIQUID WASTES

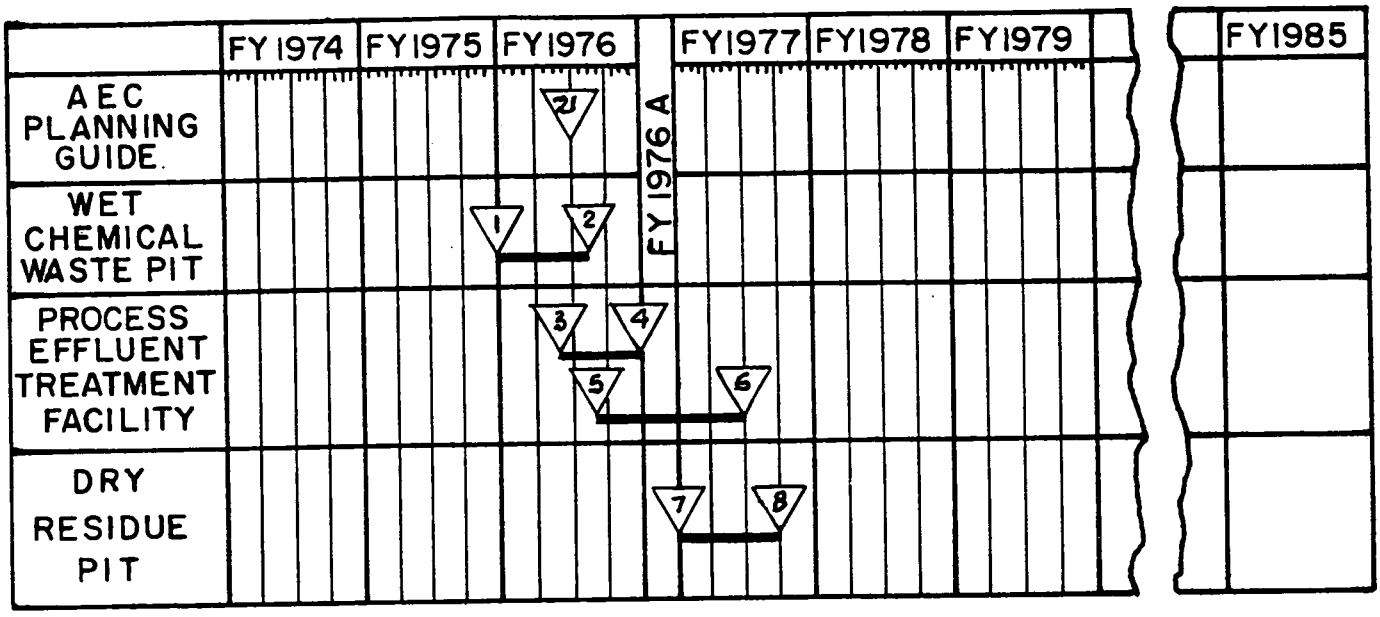

(21) Systems available for (a) monitoring and diverting waste streams released directly to man's environment, and (b) eliminating the routine use of soil columns to remove radioactivity from liquid waste.

(1) Start: Wet Chemical Pit
(2) Complete: Ref: National Lead Company of Ohio
FY-1977 Budget
Project No: BB-75-09

Process Effluent Treatment Facility
Ref: National Lead Company of Ohio
FY-1977 Budget
Project No: BB-76-01

Engineering:

(3) Start: Title I & II
(4) Complete

Construction:

(5) Start
(6) Complete

(7) Start: Storage Pit for Dry Residues
(8) Complete: Ref: National Lead Company of Ohio
FY-1977 Budget
Project No: BB-77-01

5.3.2 Accomplishments in FY 1976

1. The survey of the entire storm sewer system, using portable flow proportional samplers should be completed. Elimination of uranium sources found by the survey will be implemented to the extent possible within budgetary commitments.

2. Study and field tests to determine reverse osmosis applicability to removal of radionuclides from process effluents will be completed. Design of a Process Effluent Treatment Facility will be started. Construction will start on the building phase.

3. Construction will be started on a new Wet Chemical Waste Pit, to be available for use by Mid-FY 1976.

Reference:
(1) Section 5.3.1, Summary and Milestone Charts FMPC Radioactive Waste Management Plan, 1975

(2) Sections 3.2.2.1.3 and 4.3.3, FMPC Radioactive Waste Management Plan, 1975

(3) NLO FY 1977 Budget, Project No. BB-75-09 "Wet Chemical Pit"

5.3.3 Program and Accomplishments, FY 1976A and FY 1977

1. Engineering and procurement of equipment will be completed for a Process Effluent Treatment Facility early in FY 1977. This new facility will receive combined process effluents from the Wet Chemical Waste Pit and the General Sump, and will utilize precipitation, filtration, and reverse osmosis techniques to remove radionuclides and other pollutants to the extent required to meet post-1977 discharge standards established by the NPDES discharge permit.

   Construction, shakedown, and startup of the new facility will be completed by the end of FY 1977.

   Reference: (1) Section 5.3.1, Summary and Milestone Charts, FMPC Radioactive Waste Management Plan, 1975

   (2) NLO FY 1977 Budget, Project No. BB-76-01

5.3.4 Program and Accomplishments, FY 1978 - FY 1983

1. Continuous programs will be maintained for reduction of uranium losses and maintenance of levels of concentrations of radionuclides in final effluents well within the ERDAM-0524 Concentration Guide specifications for uncontrolled areas.

5.4 Management of Solid Waste Contaminated with Radioactivity

No operational changes in solid waste management at FMPC are planned during the period FY 1976 through FY 1983. No solid waste treatment to reduce volume generated appears feasible because of the low level of radioactive contamination of these wastes.

A new clay lined Dry Residue Waste Pit will be constructed in FY 1977 to provide additional capacity for the storage of these residues. The existing Dry Residue Pit (No. 4) will threafter be covered with earth to prevent dusting and provide drainage from the area. The earth cover will be seeded to prevent erosion.

5.5 Management of Airborne Radioactive Waste

Under present production programs, the existing controls on airborne radioactive releases are considered adequate. Uranium is the only radionuclide discharged in significant quantities and these releases usually occur because of the sudden rupture of a dust collector bag. Collector inspection and maintenance will be continuously emphasized to reduce losses due to avoidable malfunctions.

No capital equipment fund requirements are anticipated for reduction of airborne radioactive releases.

5.6 Summary Tabulation of Budget Projections for Radioactive Waste Management Activities

The following is a summary of Budget Projections for capital equipment and construction funds (in $1,000's):

	FY 1975	FY 1976	FY 1976A	FY 1977	FY 1978	FY 1979	FY 1980
(1) Management of Low-Level Liquid Waste	1 (2)	549 (2)	50 (3)	150 (3)	--	--	--
Management of Solid Waste Contaminated with Radioactivity	--	--	--	100 (4)	--	--	--
Management of Airborne Radioactive Waste	--	--	--	--	--	--	--

NOTES:

(1) High level liquid wastes neither generated nor stored at FMPC.

(2) Wet Chemical Waste Pit - 399)
Process Effluent Treatment Facility - 150) 549

(3) Process Effluent Treatment Facility

(4) Dry Residue Waste Pit

6.0 Description of Decontamination and Decommissioning

6.1 Radioactively Contaminated Facilities

There are no radioactively contaminated facilities and/or adjoining land at FMPC either (a) excess to present needs, or (b) expected to become excess in the next five years under program assumptions used in preparing FY 1977 budget submissions. The above accepts the definition of "facility" as a distinct operational unit including building, capable of being separated from the whole for disposal to others.

Based upon a survey in 1971 by the General Services Administration, GSA and AEC at a meeting on February 18, 1972, agreed that no portion of the land area included in FMPC was excess to present needs.[3]

No facilities are designated as "standby" although there are portions of the equipment within certain facilities so designated. All facilities as such are considered as currently in use. There is no data available which can be applied to estimate a date when the status of these facilities can or will be changed to "excess" or "expected to become excess."

[3]Letter, D. K. Kinsey (GSA) to J. A. Erlewine (AEC), February 25, 1972

6.2 Degree of Radioactive Contamination

A survey was made in 1972 of the contamination levels in FMPC buildings.[4] No appreciable change from the levels noted would be expected today. The levels ranged from clean to moderate, based upon the following table:

Contamination Category	Alpha, dpm/100 cm^2 Nat. U & Th	Alpha, dpm/100 cm^2 Other	$\beta + \gamma$ at 1 cm mr/hr
Clean	$< 10^4$	10^3	< 0.4
Low	$10^4 - 10^5$	$10^3 - 10^4$	0.4 - 4.0
Moderate	$10^5 - 10^7$	$10^4 - 10^6$	4 - 400
High	$> 10^7$	$> 10^6$	> 400

Contamination is due to natural or low enrichment uranium with the exception of a few areas where thorium was also a minor source.

6.3 Recommendations for Conversion

Since there are no excess facilities, this section is not applicable to FMPC.

6.4 Other Radioactive Materials

Data as to other radioactive materials external to buildings or storage tanks not indicated heretofore and not originally buried as solid waste have been included in the Radioactivity Inventory compiled in response to letter January 18, 1974, J. L. Liverman to Field Office Managers.[5]

[4]Letter, Contamination Levels in FMPC Buildings, M. S. Nelson (NLO) to C. A. Keller (ORO-AEC), July 14, 1972

[5]Radioactivity Inventory, 1952 - 1972, M. S. Nelson (NLO) to C. A. Keller (ORO-AEC), June, 1974

BIBLIOGRAPHY

1. Radioactive Waste Management Plan, Rev. 1, June 17, 1974.
2. National Lead Company of Ohio Nuclear Material Management Manual.
3. National Lead Company of Ohio Accounting Manual.
4. CP-68-13, New Wet Chemical Waste Pit, March 28, 1968 National Lead Company of Ohio Construction Proposal.
5. Operating Limits - Radioactive Materials Released to the Environment Letter, M. S. Nelson (NLO) to J. A. Lenhard (ORO-AEC), May 6, 1974.
6. Letter, D. K. Kinsey, GSA, to J. A. Erlewine, AEC, February 25, 1972.
7. Contamination Levels in FMPC Buildings, M. S. Nelson, NLO to C. A. Keller, ORO-AEC, July 14, 1972.
8. Radioactivity Inventory, 1952 - 1972, M. S. Nelson (NLO) to C. A. Keller (ORO-AEC), June, 1974
9. National Lead Company of Ohio FY 1977 Capital Budget.
10. FMPC Environmental Monitoring Annual Report for 1974. NLCO-1117 (Special), April 4, 1975.
11. Radioactive Effluent Release Monitoring and Control. M. S. Nelson to C. L. Karl, February 5, 1971.
12. The Control and Sampling of Airborne Contaminants. K. N. Ross and M. W. Boback, November 15, 1971.