6400 G-000-307 .21

US NUCLEAR REGULATORY COMMMISSION, DI MINIMIS WASTE IMPACTS ANALYSIS METHODOLOGY, PREPARED FOR DIVISION OF WASTE MANAGEMENT - (USED AS A REFERENCE IN OU1 AND OU5 RI REPORTS)

00/00/84

NUREG/CR-3585
DAMES & MOORE US NRC
500
REPORT

6400

NUREG/CR-3585
Vol. 1

De Minimis Waste Impacts Analysis Methodology

Prepared by O. I. Oztunali/D&M
G. W. Roles/USNRC

Dames and Moore

Prepared for
U.S. Nuclear Regulatory Commission

000001

Reprinted May 1990

AVAILABILITY NOTICE

Availability of Reference Materials Cited in NRC Publications

Most documents cited in NRC publications will be available from one of the following sources:

1. The NRC Public Document Room, 2120 L Street, NW, Lower Level, Washington, DC 20555

2. The Superintendent of Documents, U.S. Government Printing Office, P.O. Box 37082, Washington, DC 20013-7082

3. The National Technical Information Service, Springfield, VA 22161

Although the listing that follows represents the majority of documents cited in NRC publications, it is not intended to be exhaustive.

Referenced documents available for inspection and copying for a fee from the NRC Public Document Room include NRC correspondence and internal NRC memoranda; NRC Office of Inspection and Enforcement bulletins, circulars, information notices, inspection and investigation notices; Licensee Event Reports; vendor reports and correspondence; Commission papers; and applicant and licensee documents and correspondence.

The following documents in the NUREG series are available for purchase from the GPO Sales Program: formal NRC staff and contractor reports, NRC-sponsored conference proceedings, and NRC booklets and brochures. Also available are Regulatory Guides, NRC regulations in the *Code of Federal Regulations*, and *Nuclear Regulatory Commission Issuances*.

Documents available from the National Technical Information Service include NUREG series reports and technical reports prepared by other federal agencies and reports prepared by the Atomic Energy Commission, forerunner agency to the Nuclear Regulatory Commission.

Documents available from public and special technical libraries include all open literature items, such as books, journal and periodical articles, and transactions. *Federal Register* notices, federal and state legislation, and congressional reports can usually be obtained from these libraries.

Documents such as theses, dissertations, foreign reports and translations, and non-NRC conference proceedings are available for purchase from the organization sponsoring the publication cited.

Single copies of NRC draft reports are available free, to the extent of supply, upon written request to the Office of Information Resources Management, Distribution Section, U.S. Nuclear Regulatory Commission, Washington, DC 20555.

Copies of industry codes and standards used in a substantive manner in the NRC regulatory process are maintained at the NRC Library, 7920 Norfolk Avenue, Bethesda, Maryland, and are available there for reference use by the public. Codes and standards are usually copyrighted and may be purchased from the originating organization or, if they are American National Standards, from the American National Standards Institute, 1430 Broadway, New York, NY 10018.

DISCLAIMER NOTICE

This report was prepared as an account of work sponsored by an agency of the United States Government. Neither the United States Government nor any agency thereof, or any of their employees, makes any warranty, expressed or implied, or assumes any legal liability of responsibility for any third party's use, or the results of such use, of any information, apparatus, product or process disclosed in this report, or represents that its use by such third party would not infringe privately owned rights.

00000

6400

NUREG/CR-3585
Vol. 1

De Minimis Waste Impacts Analysis Methodology

Manuscript Completed: December 1983
Date Published: February 1984

Prepared by
O. I. Oztunali, Dames & Moore
G. W. Roles, USNRC

Dames and Moore
20 Haarlem Avenue
White Plains, NY 10603

Prepared for
Division of Waste Management
Office of Nuclear Material Safety and Safeguards
U.S. Nuclear Regulatory Commission
Washington, DC 20555
NRC FIN B7318

000003

ABSTRACT

A calculational methodology is presented which can be used to estimate impacts from disposal of radioactive waste by less restrictive means ("de minimis" waste disposal). The methodology consists of two computer codes: one which determines annual radiological impacts to individuals and populations from release of de minimis waste into less restrictive disposal pathways, and another which determines limiting concentrations of radionuclides based upon comparison with a set of individual dose limitation criteria. Operational impacts are calculated for de minimis waste transportation, treatment by incineration, and disposal. Long-term impacts after disposal (e.g., groundwater migration) are also calculated as are possible impacts from recycle of metal or glass. Alternatives for waste treatment/disposal include on-site, off-site as a municipal waste, and off-site as a hazardous waste.

TABLE OF CONTENTS

Section | Page

1.0 INTRODUCTION

1.1 Purpose of the Study 1-1
1.2 General Approach 1-2
1.3 Report Contents 1-4

1.0 REFERENCES 1-6

2.0 OVERVIEW OF ANALYSIS METHODOLOGY

2.1 Scope 2-2
2.1.1 Waste Characteristics 2-2
2.1.2 Types of Impacts Calculated 2-2
2.1.3 Limitations 2-10

2.2 Decision Indices 2-15
2.2.1 Region and Disposal Facility Indices 2-16
2.2.2 Waste Specific Indices 2-20

2.3 Overview of Pathway Analysis Methodology 2-24
2.3.1 Generalized Approach 2-25
2.3.2 Radionuclide Release and Transport 2-26
2.3.3 Pathway Dose Conversion Factors 2-28

2.0 REFERENCES 2-32

3.0 WASTE TRANSPORTATION IMPACTS

3.1 Background 3-1
3.2 Occupational Exposures to Transportation Workers 3-8
3.3 Population Exposures 3-11

3.0 REFERENCES 3-15

4.0 WASTE PROCESSING OPERATIONAL IMPACTS

4.1 Overview 4-1
4.1.1 Off-site Individual Exposures 4-1
4.1.2 Off-site Population Exposures 4-3
4.1.3 On-site Individual Impacts from Airborne Particulates 4-3
4.1.4 On-site Individual Impacts from Direct Gamma Radiation 4-5
4.1.5 Meteorological Diffusion 4-6

4.2 Generator Impacts 4-11

4.3 Municipal Solid Waste Processing 4-12
4.3.1 Off-site Exposures 4-13
4.3.2 Impacts to Incinerator Personnel 4-14
4.3.3 Waste Sorting Exposures 4-18

000005

TABLE OF CONTENTS (continued)

Section | Page

4.4 Hazardous Waste Processing 4-23
4.4.1 Off-site Incinerator Releases 4-24
4.4.2 Impacts to Incinerator Personnel 4-25

4.0 REFERENCES 4-27

5.0 WASTE DISPOSAL OPERATIONAL IMPACTS

5.1 Generator Disposal Facility 5-2

5.2 Sanitary Landfill Disposal 5-6
5.2.1 Overview 5-6
5.2.2 Personnel Requirements 5-7
5.2.3 Assumptions for Personnel Exposures 5-10
5.2.4 Offsite Releases 5-14

5.3 Open Dump 5-14
5.3.1 Overview 5-15
5.3.2 Personnel Requirements 5-15
5.3.3 Assumptions for Personnel Exposures 5-16
5.3.4 Offsite Releases 5-18

5.4 Incineration and Sorting Variations for Municipal Waste . 5-19

5.5 Hazardous Waste Disposal Facility 5-20
5.5.1 Overview 5-20
5.5.2 Personnel Requirements 5-23
5.5.3 Assumptions for Personnel Exposures 5-23
5.5.3.1 Airborne Releases From the Working Face 5-25
5.5.3.2 Direct Gamma Radiation From the Working Face . . . 5-29
5.5.3.3 Covered Waste 5-29
5.5.4 Offsite Releases 5-30
5.5.5 Waste Processing Corrections 5-32

5.0 REFERENCES 5-33

6.0 POST-DISPOSAL IMPACTS

6.1 Overview 6-1
6.1.1 Intrusion Scenarios 6-2
6.1.2 Total Activity Scenarios 6-4

6.2 Intruder Scenarios 6-6
6.2.1 Intruder-Construction Scenario 6-7
6.2.2 Intruder-Agriculture Scenario 6-11

6.3 Groundwater Scenarios 6-18
6.3.1 Source Term 6-20
6.3.2 Migration Reduction Factor 6-25
6.3.3 Disposal Cell Leachate Treatment and Overflow 6-33

TABLE OF CONTENTS (continued)

Section Page

6.4 Exposed Waste Scenarios 6-37
6.4.1 Wind Transport Scenario 6-39
6.4.2 Surface Water Scenario 6-41

6.0 REFERENCES 6-42

7.0 RECYCLE OF METAL OR GLASS

7.1 Background 7-1
7.2 Recovery of Metal 7-3
7.3 Recovery of Glass 7-11

7.0 REFERENCES 7-15

8.0 COMPUTER CODES AND EXAMPLE PROBLEMS

8.1 Structure of the Codes 8-1
8.1.1 IMPACTS Code 8-2
8.1.2 INVIMPS Code 8-3

8.2 Data Files 8-4

8.3 Example Problems 8-5
8.3.1 IMPACTS Examples 8-5
8.3.1.1 Problem Statement 8-27
8.3.1.2 Problem Results 8-30
8.3.2 INVIMPS Examples 8-34
8.3.2.1 Problem Statement 8-34
8.3.2.2 Problem Results 8-36

8.0 REFERENCES 8-40

APPENDIX A Generation Rates and Characteristics of Solid and Hazardous Wastes
APPENDIX B Resource Recovery Systems
APPENDIX C Reference Treatment/Disposal Facilities
APPENDIX D Pathway Dose Conversion Factors
APPENDIX E Projections of Secondary Side PWR Ion-Exchange Resins and Filter Media
APPENDIX F Computer Listings
APPENDIX G Example Problem Listings

800000
000007

0048

LIST OF TABLES

Table		Page
2-1	Radionuclides Considered	2-3
2-2	Types of Impacts Calculated for Each Disposal Facility	2-6
2-3	Descriptive Summary of Reference Site Characteristics	2-12
2-4	Reference Treatment and Disposal Facilities	2-13
2-5	Regional and Disposal Decision Indices	2-17
2-6	Region Index Dependent Properties	2-18
2-7	Waste Specific Decision Indices	2-22
2-8	Pathway Dose Conversion Factor Components	2-30
2-9	Access Location-to-Human Pathway Descriptions	2-31
3-1	Correction Factor - CF	3-6
3-2	Distance Factor - DF	3-7
3-3	Values of DOZ with Distance x_m	3-13
4-1	Vertical Standard Deviation Constants-1	4-7
4-2	Vertical Standard Deviation Constants-2	4-8
4-3	Reference Atmospheric Dispersion Values	4-9
4-4	Population Distribution for Reference Site Environments	4-10
4-5	Reference Population Factors	4-11
4-6	Assumed Worker Requirements for Municipal Incinerator Facility	4-15
4-7	Waste-to-air Transfer Factors	4-16
4-8	Distance Factors for Incinerators	4-18
4-9	Daily Material Flow for the Reference 500 tons/day Municipal Incinerator Facility and Sorting Options	4-20
4-10	Distribution of Waste Components as a Function of Options	4-21
4-11	Assumed Worker Requirements for Waste Sorting Options	4-22
4-12	Assumed Worker Requirements for Hazardous Waste Incinerator Facility	4-25
4-13	Waste-to-air Transfer Factors for Hazardous Waste Incinerator Facility	4-26
5-1	Types of Activities at Sanitary Landfill	5-9
5-2	Personnel Requirements for Landfills in Los Angeles County Sanitation Districts	5-9
5-3	Personnel Requirements for Proposed Sites in Des Moines Metropolitan Area	5-10
5-4	Sanitary Landfill Facility Personnel	5-10
5-5	Assumptions on Sanitary Landfill Personnel	5-12
5-6	Waste-to-air Transfer Factors for Sanitary Landfill	5-12
5-7	Open Dump Personnel	5-16
5-8	Assumptions on Open Dump Personnel	5-16
5-9	Waste-to-air Transfer Factors for Open Dump	5-17
5-10	Variations in Waste Properties Resulting from Sorting Options	5-21
5-11	Hazardous Waste Facility Personnel	5-23
5-12	Assumptions on Hazardous Waste Facility Personnel	5-25

000008

LIST OF TABLES (continued)

Table Page

5-13 Waste-to-air Transfer Factors for Hazardous Waste Facility 5-28
5-14 Accident Atmospheric Dispersion Factors 5-31
5-15 Waste Processing Corrections 5-32

6-1 Reference Dust Loadings and Site Selection Factors 6-11
6-2 Reference Site Selection Factors for the Intruder-Agriculture Scenario 6-14
6-3 Exponential Integral Values 6-16
6-4 Reference Disposal Parameters 6-21
6-5 Radionuclide Partition Ratios Between Waste and Leachate 6-24
6-6 Values of the Contact Time Fraction 6-25
6-7 Assumed Retardation Coefficients 6-30
6-8 Reference Travel Times and Peclet Numbers 6-32
6-9 Release Fractions for Leachate Treatment 6-36
6-10 Mobilization Rates for Erosion Scenarios 6-40

7-1 Dose-Factors for Recycling 90 Mg of Metal Containing 10 pCi/g of ^{14}C 7-5
7-2 Dose-factors Used in the Metal Recycling Scenarios 7-8

8-1 Decision Indices Definitions 8-6
8-2 Waste Stream Specific Arrays 8-7
8-3 Radionuclide Dependent Arrays 8-10
8-4 Facility Dependent Parameters 8-12
8-5 Site Dependent Parameters 8-15
8-6 Structure of TAPE1 8-19
8-7 Structure of TAPE2 8-20
8-8 Structure of TAPE5 for IMPACTS 8-24
8-9 Structure of TAPE5 for INVIMPS 8-25
8-10 Radionuclide Names and Solubility Classes 8-26
8-11 TAPE5 for IMPACTS Example Problems 8-28
8-12 Natural Dirt Radionuclides and Concentrations 8-29
8-13 Summary of Impacts for IMPACTS Example 1 8-31
8-14 Summary of Impacts for IMPACTS Example 2 8-32
8-15 TAPE5 for INVIMPS Example Problems 8-35
8-16 Summary of Maximum Radionuclide Concentrations for INVIMPS Example 1 8-37
8-17 Summary of Maximum Radionuclide Concentrations for INVIMPS Example 2 8-38

000009006

0026

LIST OF FIGURES

Figures		Page
2.1	Principal Waste Treatment/Disposal Options	2-5
3.1	Exposure Geometry	3-5
3.2	Transportation Geometry	3-12
5.1	Cross-Section of Sanitary Landfill	5-8
6.1	Foundation Volume Calculations	6-8
6.2	Direct Gamma Exposure Geometry	6-15
6.3	Geometric Relationships of Disposal Area and Discharge Locations	6-19
6.4	Geometry of Groundwater Migration	6-27

00001000

Acknowledgement

The authors would like to acknowledge the contribution of several persons from Dames and Moore as well as the U. S. Nuclear Regulatory Commission. Contributors from Dames and Moore include C. J. Pitt, who contributed to the programming of the calculational methodology, and J. Furfaro, who contributed to the discussion in Appendix B regarding current resource recovery technology. Others from Dames and Moore who contributed in a clerical nature include Linda Buehler, Mary Gizzo, and Cathy Jandly. Special contributors from the U. S. Nuclear Regulatory Commission include Jeannette Kiminas, Supervisor, Central Word Processing Branch, Willste Unit, and Elizabeth Williams, Copy Editor.

The authors would also like to acknowledge and thank those reviewers of draft versions of this report.

Preface

The calculational methodology described in this report provides a mechanism to estimate radiological impacts from disposal of low activity radioactive waste by less restrictive means. The calculational methodology may be potentially used by NRC and Agreement States as part of evaluating applications for such waste disposal. It may also be potentially used by licensees and others as part of preparing such applications. The calculational methodology is primarily geared toward generic rather than site-specific uses, although the user of the methodology has a number of options for replacing most of the assumed generic parameter values with site-specific ones.

Many of the physical processes modeled by the calculational methodology are quite complicated, and simplifying assumptions have by necessity been made. It is believed that, considering the scope of the project that produced the report, the calculational methodology will yield a reasonable representation of potential radiological impacts. It is also recognized, however, that improvements can always be made and that such improvements will enhance the ability of NRC and others to prepare and evaluate any applications for waste disposal that may be made.

The authors therefore welcome any written suggestions that readers may have regarding modifications to the calculational methodology that will result in a more accurate analysis. Specific proposals would be of most use -- for example, the use of a specific alternative calculational technique. Suggestions may be sent to the Low-Level Waste and Uranium Recovery Projects Branch, U. S. Nuclear Regulatory Commission, Washington, DC 20555 (Mail stop: SS-623).

1.0 INTRODUCTION

Over the last several years, there has been considerable interest in developing criteria for disposal of radioactive waste by less restrictive means, often termed "de minimis" waste disposal.* As an example, when the regulation 10 CFR Part 61 on "Licencing Requirements for Land Disposal of Radioactive Waste" was proposed in July, 1981 (Ref. 1), one of the more pervasive comments received by NRC staff (Ref. 2) was that NRC should establish general de minimis criteria as part of the final rulemaking action. Many commenters suggested that NRC establish overall numerical concentration limits for de minimis waste disposal and to include these limits in the tables listing radionuclide concentration limits for other classes. Some commenters also proposed some specific waste streams to be considered de minimis (e.g., ion-exchange resins from secondary loops of pressurized water reactors) (Ref. 2).

NRC staff determined that to include specific de minimis waste concentration limits in the final Part 61 rule would delay its issue (Ref. 3). In addition, it was believed that, given current knowledge, such limits would probably need to be based on the most conservative of the great variety of possible waste forms and disposal methods, and thus the limits could potentially be overconservative and unrealistic for many waste streams.

Thus, the approach adopted by NRC staff was to finalize the Part 61 rule and to address setting standards for less restrictive waste disposal on a specific waste stream basis. As envisioned, NRC would set certain minimum disposal requirements such as disposal through ordinary refuse channels rather than allowing unrestricted release or recycle. The Federal Register Notice announcing the final Part 61 rule (Ref. 3) contains instructions to licensees regarding preparation of applications to NRC for less restrictive disposal of particular waste streams. NRC staff believes that it will be much easier to set forth generic limits for all waste after processing a few applications for particular waste streams (Ref. 3).

1.1 Purpose of the Study

The purpose of this report is to provide a calculational tool which can be used to determine impacts from treatment and disposal of de minimis waste by various methods. This calculational tool has been designed mostly for generic applications and has most utility for dry solids (e.g. trash) types of waste. It provides two types of results. First, given a particular waste stream with given physical, chemical, and radiological characteristics, the methodology determines impacts from treatment and disposal of the waste. Second, given a particular set of dose limitation criteria, the methodology determines limiting concentrations for waste

---

* In this report, the term "de minimis waste disposal" is frequently used as a shorthand for radioactive waste disposal by less restrictive means. This is done for convenience despite the slight differences in the two concepts.

disposal by comparison with dose rates calculated for limiting impact scenarios. The calculational methodology may be potentially used by NRC staff as part of reviewing applications for disposal by less restrictive means as well as by licensees in preparing such applications. The calculational methodology may also be potentially used as part of a cost/benefit analysis for rulemaking purposes.

1.2 General Approach

The general approach taken in the development of the analysis methodology is somewhat similar to that taken for the data base report (Ref. 4) prepared to support the preparation of the draft Environmental Impact Statement (EIS) on 10 CFR Part 61 (Ref. 5). The calculational methodology is structured as a pair of computer codes, and the selection of a particular code depends upon the type of information desired. To use one code, IMPACTS, the user inputs information regarding the waste physical and radiological characteristics, as well as information regarding the particular waste treatment and/or disposal methods to be considered. The code then calculates radiological impacts to individuals and populations based on calculation of movement of radioactive material through various pathways. To use the second code, INVIMPS, the user inputs information regarding the waste physical characteristics, the treatment/disposal methods to be considered, and a set of organ-specific "dose limitation criteria," i.e., a set of maximum allowable dose rates to an individual. The code then determines maximum concentration limits for waste which will limit impacts to an individual to the dose limitation criteria.

In developing the calculational methodology, one of the principal consideration was the great variety of possible waste treatment and disposal methods for de minimis waste disposal, as well as the great variety of possible site environments in which treatment and/or disposal can take place. Another consideration was the need to address all significant pathways for human exposure, rather than just concentrating on impacts due to disposal operations themselves. In addition, there was a need to consider the depth to which site-specific considerations would enter the calculations. A generic type of analysis implies a less detailed set of input requirements than a site-specific type of analysis, where the greater availability of real site-specific data would justify a more complete analysis. Finally, there was a recognition that to maximize the usefulness of the calculational methodology, there was a need to maintain a high degree of flexibility in the methodology. As a result, the user can optionally select one of three different alternatives for waste treatment and/or disposal:

(1) on-site treatment/disposal (i.e., at the waste generator's facility);
(2) off-site treatment/disposal as a municipal solid waste; or
(3) off-site treatment/disposal as a hazardous waste.

The choice of a specific alternative would depend in a large degree upon the physical characteristics of the waste. For example, for very large

quantities of slightly contaminated dirt, the first alternative may be more appropriate. For small quantities of slightly contaminated trash, the second alternative may be more appropriate unless the chemical content of the waste would require disposal as a hazardous material. The selection of a particular alternative can have a significant influence upon the results, since there are a number of differences in the design and operation of various facilities.

Briefly, for on-site disposal, the code user may optionally consider waste incineration, waste disposal, or waste incineration followed by waste disposal. For off-site disposal, the code user may either send the waste directly to a disposal facility or first send the waste to an incinerator. The residue from incineration is sent to a disposal facility.

Impacts are calculated to the maximum individual and to populations during all operational activities such as transportation to an off-site treatment and/or disposal facility, treatment by incineration, and waste disposal. Long-term impacts such as ground water migration after the waste has been disposed are also calculated. If the de minimis waste is treated as a municipal solid waste, then radiological impacts from recycle of any metal or glass contained in the de minimis waste may be considered. Recycle of metal containers as scrap metal may also be considered for both municipal and hazardous waste treatment/disposal.

For on-site treatment and/or disposal, most parameters specific to the treatment/disposal method must be specified by the code user. Such parameters may include, for example, the size of the disposal area. This is done to maintain flexibility and to enable screening of impacts associated with a particular site. An application of the methodology could include calculation of potential impacts from a site formerly used for disposal of waste under Section 20.304 of 10 CFR Part 20.

For off-site disposal, reference treatment/disposal facilities are assumed, although the code user has the option of overriding the assumed parameters associated with the reference facilities and inputting user-specified parameters. For municipal waste disposal, a reference 500 ton/day municipal incinerator is assumed as is a reference 25-acre municipal waste disposal facility. The reference municipal incinerator is typical of existing designs and operating practices, although a number of waste pretreatment ("sorting") options (including size reduction, separation of non-combustible material, and resource recovery of scrap metal and glass) may be considered. Municipal waste disposal is assumed to be a landfill operation, and two different levels of operation may be assumed: either a sanitary landfill or an open dump. Impacts calculated for operational activities and over the long-term generally differ for the two types of facilities. The open dump option is conservatively included despite the current phasing out of this disposal method.

For hazardous waste disposal, a reference 100 ton/day incinerator is assumed as is a reference 150-acre disposal facility, which is assumed to consist of a landfilling operation. No waste sorting options (i.e., size

reduction or separation of non-combustible material) are considered for the hazardous waste incinerator, and also no resource recovery options are considered except for possible recycle of scrap metal packages. This is consistent with current hazardous waste incineration technology. Two optional hazardous waste disposal facilities may also be selected, although little difference between the facilities is assumed for purposes of determining operational impacts. Some differences are considered, however, in terms of long-term groundwater migration and other impacts.

Many parameters used in the computer codes are influenced by the environmental conditions at the location that waste treatment or disposal takes place. Since it is impossible to consider all possible environmental variations in this report, the approach taken is to assume a reference set of three different site environmental characteristics, and any one of the set may be specified by the code user. The sites include a humid site in a moderately populated area, a humid site in a highly populated area, in a semi-arid site in a low populated area. In addition, parameters based upon site-specific environmental characteristics are maintained in a separate input file in the computer codes, and the user may optionally expand the file to include additional reference sites. Finally, the reference parameters may be optionally overridden and replaced by parameters input by the code user.

1.3 Report Contents

Main Body

There are seven chapters in addition to this introductory Chapter 1.0. Chapter 2.0 is in many ways another introductory chapter, but is important to understanding the calculational methodology. This chapter outlines the scope of the calculational methodology, including the types of information on waste characteristics which must be input, the various treatment and disposal operations, and the radiological impacts which are calculated. This chapter also discusses the methodology used by the codes to signify different treatment and disposal operations (i.e., the decision indices) as well as the general approach to the pathway analysis of radiocontaminant release and transfer, and human exposures.

Chapter 3.0 presents the methodology for calculating radiological impacts resulting from transport of de minimis waste from the waste generator to a municipal incinerator, to a municipal waste landfill facility, or to a hazardous waste incineration or disposal facility. All waste transport is assumed to be by truck. Radiological impacts are determined as annual dose rates in units of mrem/year to transportation workers and in units of person-mrem/year to the population surrounding the travel route.

Chapters 4.0 and 5.0 address impacts occurring during operation of a waste treatment and waste disposal facility, respectively. Considered in each chapter are on-site treatment/disposal, off-site treatment/disposal as a municipal waste, and off-site treatment/disposal as a hazardous waste.

000016

Impacts to individuals and to populations are considered. For off-site treatment/disposal, facility workers are considered to be non-radiological workers, i.e., they are assumed to be part of the affected population.

Chapter 6.0 considers impacts which could occur after waste has been disposed into the disposal facility ("post-disposal impacts"). These impacts include, for example, those from ground water migration, disposal cell overflow and leachate treatment, potential inadvertent human intrusion, and erosion.

Chapter 7.0 addresses impacts to individuals and populations which could occur due to recycle of metal or glass as scrap. Recycle scenarios include recovery of metal or glass at a municipal waste incinerator, and recovery of metal packages as scrap. Impacts are calculated in units of mrem/yr to individuals involved in the recycle scenario (e.g., smelter workers). In addition, population impacts are calculated to populations assuming 30-year use of a product containing recycled metal or glass. The population impacts calculated for recycle activities are thus in different units (person-mrem over 30 years) than those population impacts calculated for waste transport, treatment, and disposal (person-mrem/year).

A discussion of the computer codes written to perform the impacts calculations is presented in Chapter 8.0. Included in the discussion are the basic assumptions, the general approach to the development of codes, and a discussion of the analysis performed by each code. Finally, Chapter 8.0 presents an application of the methodology to some example problems.

Appendices

The report contains seven appendices. Appendices A through C are included as backup sources of reference to the information presented in the main body of the report. Appendix A addresses projected generation rates and characteristics of municipal solid and hazardous wastes. Current and expected future treatment options are also addressed. Appendix B discusses current and expected future technologies for resource recovery, including recycle of useful materials. Appendix C provides a more detailed background and discussion of the reference waste incineration and disposal facilities considered in the report, as well as the reference treatment/disposal site environments.

Appendix D presents the calculations used to determine the pathway dose conversion factors for the radionuclides considered in this report. These pathway dose conversion factors are generated using ICRP-30 methodology. Appendix E contains background information on one of the potential de minimis waste streams considered in this report -- i.e., PWR secondary coolant system ion-exchange resins and filter media. Projected waste volumes from 1980 to the year 2000 are presented as well as a radioisotopic distribution. Finally, Appendices F and G present, respectively, the listings of the computer codes, and the listings containing the complete results of the example problems.

CHAPTER 1.0 REFERENCES

(1) U.S. Nuclear Regulatory Commission, Office of Nuclear Materials Safety and Safeguards, "10 CFR Parts 2, 19, 20, 21, 30, 40, 51, 61, 70, 73, and 170 - Licensing Requirements for Land Disposal of Radioactive Waste, Draft Rule," Federal Register (46 FR 38081), July 24, 1981.

(2) U.S. Nuclear Regulatory Commission, Office of Nuclear Materials Safety and Safeguards, "Final Environmental Impact Statement on 10 CFR Part 61 : Licensing Requirements for Land Disposal of Radioactive Waste," NUREG-0945, November 1982.

(3) U.S. Nuclear Regulatory Commission, Office of Nuclear Materials Safety and Safeguards, "10 CFR Parts 2, 19, 20, 21, 30, 40, 51, 61, 70, 73, and 170 - Licensing Requirements for Land Disposal of Radioactive Waste, Final Rule," Federal Register (47 FR 57446), December 27, 1982.

(4) Oztunali, O. I., et.al., "Data Base for Radioactive Waste Management, Volume 3, Impacts Analyses Methodology Report," USNRC Report NUREG/CR-1759, November 1981.

(5) U.S. Nuclear Regulatory Commission, Office of Nuclear Materials Safety and Safeguards, "Draft Environmental Impact Statement on 10 CFR Part 61 : Licensing Requirements for Land Disposal of Radioactive Waste," NUREG-0782, September 1981.

000018

2.0 OVERVIEW OF ANALYSIS METHODOLOGY

The intent of this study is to develop an analysis methodology which can be used to estimate the radiological impacts resulting from the disposal of particular low activity radioactive waste streams by less restrictive means. Such waste streams could possibly include certain types of trash generated by medical or industrial facilities, or spent ion exchange resins used to filter secondary coolant loops at pressurized water reactor (PWR) nuclear power plants.

For convenience, the analysis methodology is structured as a pair of computer codes, and to use the codes, certain information regarding the characteristics of the waste is input (e.g., information such as volumes and radionuclide concentrations). Also input is information on the assumed fate of the waste stream after it leaves the waste generator's hands -- e.g., the waste stream may be sent to a municipal incinerator where it is incinerated and the residue disposed in a sanitary landfill. (There are a number of such treatment and disposal scenarios which may be considered.) The computer codes then can be used to either calculate potential radiological dose rates to individuals and populations, or calculate maximum waste concentrations so that potential dose rates to individuals will be limited to specific values.

Most of the following chapters in this report present the assumptions and calculational procedures used to estimate radiological dose rates associated with various waste management activities (e.g., dose rates to workers transporting the waste to a disposal facility, dose rates to workers disposing the waste at the disposal facility, potential groundwater migration impacts following waste disposal). These assumptions and calculational procedures are discussed in terms of several integer indices which are input by the user of the computer codes to specify particular waste treatment and disposal options. For example, one particular integer index is used which rates the relative tendency for various waste forms to disperse into the air. Inputing a particular value of this integer index as part of using the codes will result in use by the code of a particular calculational procedure.

The result is a pair of computer codes which are very flexible and which can consider several dozen possible options for treatment and disposal of waste by less restrictive means. A secondary result is that it becomes impossible to discuss the calculational methodology without repeated reference to the operational details of the computer codes, including the use of the integer indices. An overview chapter is therefore necessary which outlines the types of information which must be input to use the codes, the available set of waste treatment and disposal options built into the computer codes, and the types of radiological impacts calculated.

This overview chapter is separated into three sections. Section 2.1 outlines the scope of the calculational methodology, including the types of information on waste characteristics which must be input, the various treatment and disposal options, and the radiological impacts which are

calculated. This first section also addresses some of the limitations of the codes, including the use of reference treatment and disposal facility designs and environmental characteristics. Section 2.2 describes in detail the methodology used by the codes to signify the different waste treatment and disposal options (i.e., the integer decision indices). Section 2.3 describes the overall approach to calculate the release of radionuclides into the environment, their transfer through the environment, and the subsequent human exposures.

2.1 Scope

Information on waste streams, their physical, chemical, and radiological properties, as well as the methodologies through which they are processed and/or disposed are necessary inputs to the codes. This section discusses these information requirements and presents a section (Section 2.1.3) on the limitations of the results and their interpretation.

2.1.1 Waste Characteristics

To use the codes, one must input certain minimum information regarding the characteristics of the particular de minimis waste stream considered. This information includes:

- The annual volume and mass of de minimis waste generated.
- The radionuclides to be considered; their identity, solubility class and concentration in the waste.
- The overall density of the waste.
- The composition of the waste.
- The physical characteristics of the waste.

Most of the above data requirements are fairly straightforward. Thus far in this work, up to 85 different radionuclides (each with different solubility classes) per waste stream may be considered. The radionuclides are summarized in Table 2-1.

In the calculational methodology, the waste is separated into four components, and the user must specify the weight percent of each component. These four components consist of the following: (1) combustible materials, (2) metal, (3) glass, and (4) other materials.

The physical characteristics of the waste include information such as the tendency for the waste to disperse into the air. This is discussed in more detail in Section 2.2.

2.1.2 Types of Impacts Calculated

Once the information on the waste characteristics is input, the user must input information on how the de minimis waste is to be processed and disposed. There are three principal waste treatment/disposal options considered in the methodology, with variations on each basic option. These include:

TABLE 2-1 . Radionuclides Considered

Nuclide	Half Life (years)	Radiation* Emitted	Nuclide	Half Life (years)	Radiation Emitted	Nuclide	Half Life (years)	Radiation Emitted
H-3	1.23E+1**	b	Tc-99	2.12E+5	b	Ra-226	1.60E+3	a,b,g
C-14	5.73E+3	b	Tc-99m	6.91E-4	b,g	Ra-228	6.70E+0	b
Na-22	2.62E+0	b,g	Ru-103	1.08E-1	b,g	Ac-227	2.16E+1	a,g
P-32	3.91E-2	b	Ru-106	1.01E+0	b	Th-228	1.91E+0	a,g
P-33	6.68E-2	b	Ag-108m	5.00E+0	g	Th-229	7.34E+3	a,g
S-35	2.41E-1	b	Ag-110m	6.99E-1	b,g	Th-230	8.00E+4	a,g
Cl-36	3.08E+5	b,g	Cd-109	1.24E+0	b,g	Th-232	1.41E+10	a,g
Ca-45	4.52E-1	b	Sn-113	3.15E-1	g	Pa-231	3.25E+4	a,b,g
Sc-46	2.30E-1	b,g	Sn-126	1.05E+5	g	U-232	7.20E+1	a,g
Cr-51	7.62E-2	b,g	Sb-124	1.65E-1	b,g	U-233	1.62E+5	a,g
Mn-54	8.30E-1	b,g	Sb-125	2.71E+0	b,g	U-234	2.47E+5	a,g
Fe-55	2.60E+0	X-rays	I-125	1.65E-1	b,g	U-235	7.10E+8	a,g
Fe-59	1.25E-1	b,g	I-129	1.17E+7	b,g	U-236	2.39E+7	a,g
Co-57	7.40E-1	b,g	I-131	2.21E-2	b,g	U-238	4.51E+9	a,g
Co-58	1.95E-1	g	Cs-134	2.05E+0	b,g	Np-237	2.14E+6	a,g
Co-60	5.26E+0	b,g	Cs-135	3.00E+6	b	Pu-236	2.85E+0	a,g
Ni-59	8.00E+4	X-rays	Cs-136	3.75E-2	b,g	Pu-238	8.64E+1	a,g
Ni-63	9.20E+1	b	Cs-137	3.00E+1	b,g	Pu-239	2.44E+4	a,g
Zn-65	6.71E-1	b,g	Ba-140	3.51E-2	b,g	Pu-240	6.58E+3	a,g
Se-75	3.30E-1	b,g	La-140	4.59E-3	b,g	Pu-241	1.32E+1	a,b,g
Rb-86	5.11E-2	b,g	Ce-141	8.90E-2	b,g	Pu-242	3.79E+5	a
Sr-85	1.75E-1	b,g	Ce-144	7.78E-1	b,g	Pu-244	7.60E+7	a
Sr-89	1.44E-1	b,g	Eu-152	1.27E+1	b,g	Am-241	4.58E+2	a,g
Sr-90	2.81E+1	b	Eu-154	1.60E+1	b,g	Am-243	7.95E+3	a,g
Zr-95	1.79E-1	b,g	Yb-169	8.71E-2	b,g	Cm-242	4.45E-1	a,g
Nb-94	2.00E+4	b,g	Pb-210	2.04E+1	a,b,g	Cm-243	3.20E+1	a,g
Nb-95	9.59E-2	b,g	Po-210	3.79E-1	a,g	Cm-244	1.76E+1	a,g
Mo-99	7.61E-3	b,g	Rn-222	1.05E-2	a,g	Cm-248	4.70E+5	a,g
						Cf-252	2.65E+0	a,g

* a : alpha; b : beta; g : gamma

** Exponential notation: 1.23E+1 = $1.23 \times 10^{+1}$.

000021 000003

6400

(1) On-site treatment/disposal by the waste generator.
(2) Off-site treatment/disposal as a municipal solid waste.
(3) Off-site treatment/disposal as a hazardous waste.

On-Site Treatment/Disposal

The first option -- on-site treatment/disposal -- is illustrated in Figure 2.1. Waste generated at the facility may be either disposed on-site in its as-generated form or incinerated. The incinerator used for this purpose is assumed to be a relatively small unit typical of pathological incinerators in use at many hospitals, research laboratories, and other facilities. Once the waste is incinerated, the residue may be disposed either on-site or possibly transferred to an off-site facility. On-site disposal involves the licensee burying the waste comingled with dirt.

If the incinerator residue is disposed on-site, possible impacts resulting from such disposal are calculated. However, if the residue is to be disposed off-site, the user must resubmit the characteristics of the residue as a separate waste stream.

The types of impacts calculated are listed in Table 2-2, and include impacts resulting from airborne releases from the incinerator as well as those from disposal. Impacts calculated from incineration include the dose rate (in mrem/yr) to an individual assumed to be located at the boundary of the facility at the center line of the incinerator plume, as well as the dose rate to the surrounding population (person-mrem/yr).

Impacts related to waste disposal are calculated as operational impacts and "post-disposal" impacts. Operational impacts at the on-site disposal facility are calculated in a very conservative fashion assuming that a fraction of the waste is dispersed into the air during disposal operations. Impacts are calculated to the nearest off-site individual as well as the surrounding population (in mrem/year and in person-mrem/year, respectively). Possible personnel exposures during the disposal operation itself are not considered. This is because the facility will be licensed to possess and use radioactive materials, and such possible personnel exposures during disposal operations would be regulated as part of the facility license. That is, the workers at the on-site disposal facility are assumed to be badged radiological workers who have a proper understanding of radioactive material handling and safety precautions. It is also assumed that the facility operators comply with appropriate safety and other requirements stemming from possible hazardous chemical constituents within the waste.

Post-disposal impacts consist of impacts resulting after the waste is disposed and are similar to impacts calculated in References 1 and 2. These include impacts to some one potentially intruding into the waste after the facility is no longer controlled by the licensee. The delay time between waste disposal and loss of license control over the disposal area is specified by the user of the computer code. These intrusion impacts (in mrem/year) are calculated for a few individuals and include (a) someone

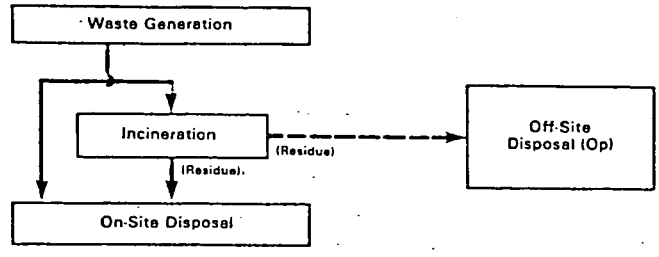

On-Site Treatment/Disposal

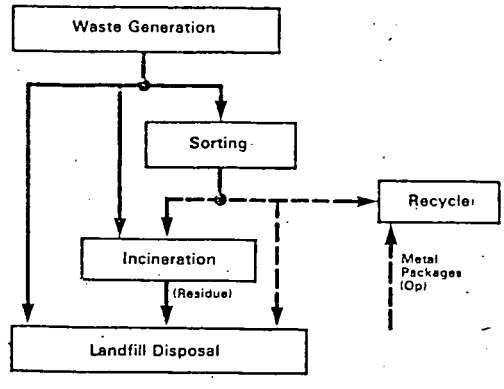

Sorting Options

(1) Incinerate all waste.
(2) Incinerate comb. waste, landfill m/g and other waste.
(3) Incinerate comb. waste, recycle m/g, landfill other waste.

Off-Site Treatment/Disposal As Municipal Waste

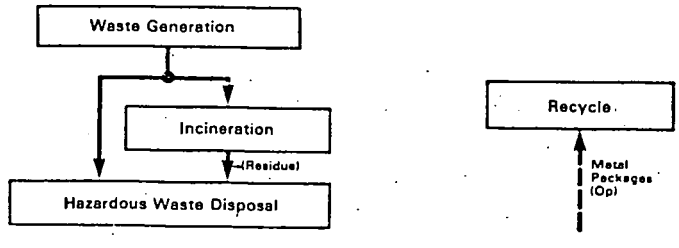

Off-Site Treatment/Disposal As Hazardous Waste

PRINCIPAL WASTE TREATMENT/DISPOSAL OPTIONS

FIGURE 2.1

TABLE 2-2. Types of Impacts Calculated for Each Disposal Facility

	Off-site Exposures		On-site Exposures		
	Individual	Population	Maximum Worker	All Workers[a]	Intruder Exposures
On-site Generator					
Incineration	x	x			
Disposal by Landfill	x	x			
Post-disposal	x[b]	x[b]			x[c]
Municipal Waste Disposal					
Transportation		x	x	x	
Sorting/Recovery			x	x	
Recycle (optional)[d]		x[e]	x		
Incineration	x	x	x	x	
Disposal by Landfill	x	x	x	x	
Post-disposal	x[b]	x[b]			x[c]
Hazardous Waste Disposal					
Transportation		x	x	x	
Recycle (optional)[f]		x[e]	x		
Incineration	x	x	x	x	
Disposal by Landfill	x	x	x	x	
Post-disposal	x[b]	x[b]			x[c]

(a) All worker exposures are added to off-site population exposures.
(b) Includes releases due to intrusion, groundwater migration, erosion, and leachate accumulation.
(c) Includes direct contact plus well water consumption.
(d) Both metal packages and metal/glass fraction of waste may be recycled.
(e) Population exposures are over 30 years.
(f) Only metal packages can be recycled.

potentially constructing a house on the site, (b) someone living in the house thus constructed, (c) someone consuming water from an on-site well.

Off-site impacts are also calculated from exposure of the disposed waste by the intruder to the actions of wind and water. These are referred to as intruder-initiated exposed waste scenarios. They include impacts to the surrounding population due to airborne dispersion of contaminated soil as well as impacts to an individual consuming water from a nearby surface water body (a stream) contaminated by waterborne runoff.

Other post-disposal impacts include those from groundwater migration, erosion of the disposed waste, and leachate accumulation within the disposal cells. Groundwater impacts are calculated to individuals assumed to consume water drawn from an off-site well used by a small population (population-well scenario), or to individuals consuming water from a groundwater discharge point assumed to consist of a stream (surface water scenario). Erosion impacts are calculated in a similar manner to the above intruder-initiated exposed waste scenarios, except that the entire disposal area is assumed to be exposed and a delay time is assumed to account for erosion of the soil covering the disposed waste.

Leachate accumulation impacts may be calculated as an option by the code user. This considers the potential situation in which precipitation percolating into the disposal cells is allowed to accumulate in the disposal cells rather than flowing through the waste and into the aquifer underlying the disposal site. This could occur in a humid site environment at a disposal facility at which an effective impermeable liner is installed or at a disposal facility located at a site having soils with very low permabilities. Three release scenarios are considered for which impacts are calculated to an off-site individual (mrem/yr) for the first two scenarios and to the surrounding population (person-mrem/yr) for the last scenario. The first scenario considers impacts during disposal facility operation, and leachate is assumed to be withdrawn from the disposal cells by the site operators, treated, and discharged to a nearby off-site stream, where the contaminated stream water is consumed and used by an individual. The last two scenarios occur at some time after the disposal facility is closed, and the disposal cells are assumed to completely fill up with leachate. The former assumes that leachate overflows the disposal cells and is carried to a nearby off-site stream, and the contaminated stream water is consumed and used by an individual. The latter assumes that the leachate is processed through an evaporator, dispersing some of the radionuclides into the air.

Off-site Municipal Waste Treatment/Disposal

The second option (Figure 2.1) involves off-site treatment/disposal of the de minimis waste as a municipal solid waste. The waste material is assumed to be released into refuse channels which are used to manage municipal solid waste. The principal variations involve (a) sending the waste to a municipal waste treatment facility, and (b) sending the waste directly to a municipal waste disposal facility (landfill).

A municipal waste treatment facility at a minimum consists of a large municipal incinerator to which collected waste is brought, dumped, and eventually burned. The residue from combustion is sent to a nearby landfill. (The municipal incinerator is assumed to be colocated with, or located very near to, a municipal waste disposal facility.) Also considered are several variations to municipal waste incineration, and these variations include processes which might take place at the incinerator to treat the waste prior to combustion.

In these variations, which are referred to as "sorting" options, the waste input to the municipal incinerator is assumed to be first reduced in size using equipment such as hammermills. Further treatment of the waste may optionally consist of the following:

- The size-reduced waste is incinerated and the residue disposed at a landfill.

- The size-reduced waste is separated into a combustible and non-combustible fraction, and the combustible fraction is incinerated. The residue from incineration is disposed at a landfill as is the separated non-combustible fraction. This non-combustible fraction includes the metal, glass, and other material comprising the de minimis waste stream composition.

- The size-reduced waste is separated into a combustible and non-combustible fraction, and the combustible fraction is incinerated. Recyclable materials (metal and glass) are recovered from the non-combustible fraction and recycled into products. Residue from incineration and the discarded material from the recovery process are disposed at a landfill.

The first option (size-reduction) could be performed as a means of increasing combustion efficiency and reducing airborne effluents. Most existing municipal incinerators are having difficulties meeting current air quality standards. The second option (size-reduction, separations) could be performed as a means of further increasing combustion and reducing airborne effluents. The smaller volume of waste incinerated also reduces the cost of airborne effluent treatment systems. The third option (size-reduction, separations, recovery) represents a possible resource recovery facility in which it is assumed that recyclable material (metal and glass) of sufficient quality may be economically recovered from the waste, and that a local market exists for the recovered material.

Waste disposed at the landfill may originate directly from the waste generator, as a residue from the incineration process, or as a discard from the sorting process. Landfills used to dispose of municipal waste are classified by EPA as either "sanitary landfills" or "open dumps" depending upon the quality of landfill operation (Ref. 3). EPA has published draft guidance to municipalities and States for proper operation of sanitary landfills, but this guidance has not been finalized (Ref. 4). Despite this lack of final Federal guidance, however, many states have

aggressive programs to eliminate open dumps, and it is believed that extensive future use of open dumps may be problematical. Nonetheless, there is a very large number of open dump operations and it will take several years to completely phase out this less adequate disposal method. A distinction between well and poorly operated landfills is thus conservatively made in this report.

The user of the code may specify the assumption of disposal into either a sanitary landfill or an open dump, and the resulting impact calculations will differ depending upon the specified facility. For example, a daily cover is placed over deposited waste at a sanitary landfill while this is not always the case for an open dump. Open burning of waste, while prohibited at a sanitary landfill, frequently takes place at an open dump. Thus, radiological impacts calculated for the two types of facilities will differ during site operations as well as over the long-term.

Recycle exposures involve the reuse of scrap metal or glass which are possibly recovered from a resource recovery facility. Also optionally assumed to be recycled as scrap metal are any metal packages which are used to deliver waste to the incinerator or landfill. Recovery of the metal packages from the landfill represents possible scavaging (open dump) or salvage (sanitary landfill) activities at the landfill. In the analysis methodology, recovered scrap metal is assumed to be input to six potential recycling scenarios while recovered glass is assumed to be used as an aggregate for construction of asphalt roads and parking areas.

The types of impacts calculated are also listed in Table 2-2, and cover the movement and handling of waste through the various optional waste treatment and disposal operational steps. These include impacts due to waste transportation, incineration (including the sorting option), disposal operations, and recycle. At each step, the dose rate to the maximum individual is determined, using reasonable yet pessimistic assumptions. Individual exposures are calculated to the workers carrying out waste transport, treatment, and disposal who are at the highest radiological risk. Exposures to off-site individuals due to waste treatment and disposal are also calculated.

A population dose rate is also estimated for each step. It should be noted that waste transport workers, along with workers at the incinerator and landfill, are considered to be part of the population. None of these workers are assumed to be radiological workers. Finally, post-disposal impacts are calculated in a similar manner as those for the above on-site disposal option.

Off-Site Hazardous Waste Treatment/Disposal

The third principal waste treatment/disposal option is illustrated in Figure 2.1, and covers the option of off-site treatment and/or disposal of de minimis waste as a hazardous waste. It is important to distinguish between municipal solid waste and hazardous waste, since the waste generation rates and available treatment/disposal options differ for these

two types of waste. Hence, potential radiological impacts from de minimis waste disposal will also differ depending upon whether chemical or other properties require that the waste be treated as either a municipal solid or hazardous waste.

As shown, waste may be assumed to be either shipped directly to the hazardous waste disposal facility (assumed to be a landfilling operation) or shipped to an incinerator where the waste is incinerated. The residue is then disposed in the hazardous waste facility. However, given the toxic or hazardous characteristics of the incinerated waste, no sorting options are assumed for the hazardous waste incinerator.

Somewhat similar to the municipal waste landfill, the user of the codes may select the assumed level of long-term environmental impacts from the hazardous waste facility. EPA has published final regulations regarding siting, design, and operation of hazardous waste disposal facilities (e.g., Ref. 5), and there is currently intense public and regulatory agency scrutiny of both short- and long-term safety aspects of the existing 44 commercial hazardous waste disposal facilities. Given the existing final EPA regulations, the limited number of such facilities, and their high visibility, it does not seem reasonable to distinguish between operational impacts associated with a "poorly-operated" and "well-operated" hazardous waste facility. The user, however, can distinguish between two levels of groundwater impacts associated with a hazardous waste disposal facility. This accounts for the probability that as experience in hazardous waste management is gained over time, improved disposal technologies will be implemented.

Except optionally for metal packages, no resource recovery is assumed to occur at the hazardous waste incinerator and disposal facility. Almost all of the current resource recovery of hazardous waste streams is centered on liquid streams such as degraded solvents which are very different in form from the type of waste potentially disposed as de minimis (see Appendix A). EPA has published standards and guidelines, however, on reuse of hazardous waste containers, and so the possibility of recycle of metal packages as scrap is considered (Ref. 8).

As shown, the types of impacts calculated for treatment and/or disposal of de minimis waste as a chemically hazardous waste are similar to those impacts calculated for treatment/disposal of de minimis waste as a municipal waste. Individual and population dose rates are calculated for transportation, incineration, and disposal facility operations, as well as for long-term impacts after waste disposal. Recycle exposures are calculated for recovered scrap metal waste packages in a similar manner as those for scrap metal recovered from municipal waste.

2.1.3 Limitations

In developing a methodology for disposal of low-activity radioactive waste by less restrictive means, a number of considerations become apparent which tend to complicate the process. These include:

000028

(1) The environmental characteristics of the location at which the waste is treated and/or disposed,

(2) The large number of methods by which waste may be treated and/or disposed, and which may vary as functions of facility size, design, and operating characteristics; and,

(3) The recognition that while de minimis waste disposed by less restrictive means will be "diluted" by large quantities of other non-radioactive waste, the extent of this dilution may vary depending upon a number of circumstances.

Site Environmental Characteristics

It is apparent that the environmental characteristics of the location at which waste treatment or disposal takes place will influence the exposures calculated. For example, if radionuclides are released into the air due to operation of a municipal waste incinerator, then the resulting calculated impacts will be influenced by factors such as the average wind speed at the incinerator site, the atmospheric stability class, and the distribution and density of the surrounding population. As another example, ground water migration of radionuclides from a disposal facility site will be influenced by a number of considerations including the amount of rainfall, the ion-exchange properties of the site soil, and the distance from the site to a point of discharge such as a well.

It is clearly impossible in this report to consider all possible variations in treatment or disposal site environmental characteristics. As a compromise, then, two approaches are adopted:

(1) A set of three different reference treatment/disposal site environmental characteristics are assumed, and any of the three may be specified by the code user. However, the user of the codes may optionally replace the assumed parameters associated with these reference environmental characteristics with alternative values.

(2) All environmental parameters are maintained in a separate input file in the computer codes, and the user may optionally expand the file to include parameters for additional reference sites.

The environmental characteristics for the reference treatment/disposal sites are derived from three of the four regional disposal site characteristics assumed in References 1, 2 and 6. The three regional sites adopted for this report consist of what has been termed the northeast site, southeast site, and southwest site. A descriptive summary of the environmental characteristics of each of the three reference sites is given in Table 2-3.

A more detailed description of the reference sites, including assumed values for various numerical parameters important to the calculations, is given in Chapter C.5 of Appendix C.

TABLE 2-3 . Descriptive Summary of Reference Site Characteristics

Site	Precipitation	Soil Permeability	Population Density
Northeast	Humid	Low	High
Southeast	Humid	Moderate	Moderate
Southwest	Semi-arid	High	Low

The environmental characteristics of the reference treatment/disposal sites are stored in an input file, termed the TAPE2 file, to the computer codes. If additional flexibility in using the computer codes is desired, the reader may optionally create additional reference sites and modify the TAPE2 file to include the additional site-specific parameter values.

Reference Treatment and Disposal Facilities

It is apparent that there are a number of possible ways in which de minimis, municipal solid, or hazardous waste may be treated and disposed, and Appendices A through C discuss several of these methods. It would be very difficult to try and characterize all such treatment and disposal methods. It would also be counter productive since several of the possible treatment and disposal methods are not applicable to the expected form of the de minimis waste. For example, the de minimis waste is expected to be generally in a solid form and so disposal methods such as deep well injection or evaporation ponds, which are today being used to dispose of bulk quantities of liquid hazardous waste, would not be generally applicable to this report.

The solution adopted in this report is to calculate radiological impacts in terms of several reference facilities. These reference facilities are described in Appendix C, and are chosen to be representative of existing waste treatment and disposal facilities in terms of facility size, design, and operation. In general, the reference facilities are chosen so that possible radiological impacts from de minimis waste treatment and disposal will be calculated in a conservative manner.

A brief summary of the reference facilities is presented in Table 2-4. Note that the capacities and yearly throughputs of the on-site incinerator and disposal facilities are "variable." This is because most of the parameters for these facilities are not assumed but are provided by the code user. A reference waste transportation mode is also assumed in the form of trucks having 5-ton waste capacities.

Waste Volume Considerations

One of the more quixotic considerations in determining impacts from de minimis waste disposal is that the de minimis waste will tend to be

000030

TABLE 2-4 . Reference Treatment and Disposal Facilities

Reference Facility	Description	Design Capacity (tons/day)	Yearly Throughput (Tons)
On-site Incinerator	Multiple-chamber[a] pathological	Varies (100-500 lb/hr)	Varies
On-site Disposal Area	Varies[b]	Varies	Varies
Municipal Waste Incinerator	Refractory walled, rectangular furnace[c]	500	140,000
Sanitary Landfill	Well-operated solid waste landfill[d]	69	16,800
Open Dump	Poorly-operated solid waste landfill[d]	69	16,800
Hazardous Waste Incinerator	Rotary kiln[e]	100	28,000
Hazardous Waste Facility	Hazardous waste disposal operation[f,g]	385	100,000

(a) Based on the incinerator discussed in Reference 7.
(b) Disposal area dimensions and other characteristics supplied by the code user.
(c) Several sorting options are assumed to be feasible for the reference incinerator. These options may be specified by the code user.
(d) The size of the reference site is 25 acres, and it operates for 20 years, resulting in a total capacity of 336,000 tons.
(e) No waste sorting options are considered for the reference incinerator.
(f) The size of the reference site is 150 acres, and it operates for 20 years, resulting in a total site capacity of 2 million tons.
(g) There are two types of hazardous waste facilities. Both are landfills having similar designs and operations. The first facility, however, is assumed to experience a lower level of percolation into the disposed waste, resulting in lower long-term impacts.

diffusely distributed among volumes of other non-radioactive waste. For example, the throughput of de minimis waste through a pathological incinerator operated by a hospital or other institution may only be a fraction of the total volume or mass of waste incinerated. Similarly, the mass of de minimis waste delivered to a particular hazardous waste facility will tend to be only a fraction of the total mass of hazardous waste delivered to that disposal facility. The first impulse, then, when calculating radiological impacts from de minimis waste disposal, is to assume that the de minimis waste is "diluted" by the total amount of non-radioactive waste which is disposed by a similar method. For example, assume that a particular type of de minimis waste is generated in the U.S. at a rate of 10,000 tons per year and the total amount of municipal solid waste transported to and disposed into landfills in the U.S. is estimated to be 200 million tons per year. The de minimis waste will, on the average, occupy only about 0.005% of the space within the landfills. Similarly, the de minimis waste will on the average occupy only about 0.005% of the space within municipal waste transport vehicles.

This approach is probably adequate for estimating "average" impacts to an individual or total impacts to a very large population. The problem is that it does not consider the types of localized impacts that could potentially occur to a few individuals. For example, a particular sanitary landfill may be located in close proximity to a large number of licensees who each generate significant quantities of de minimis waste. A municipal waste transport vehicle picking up de minimis waste from a licensee could potentially receive a truck load consisting totally of de minimis waste. Thus, a few individuals could potentially receive an exposure which is larger than the "average" individual exposure, and the population in the vicinity of the particular sanitary landfill could potentially receive a larger than "average" population exposure.

A related problem is that while there may be only a limited number of types of waste treatment or disposal facilities, there may also be an excess of others. This can lead to possible concentration of de minimis waste in only a few facilities as well as difficulties in matching the output of a particular waste treatment facility with the input of a particular waste disposal facility. As an example, consider that currently there are approximately 25 commercial hazardous waste incinerators and 44 commercial hazardous waste disposal facilities in operation in the United States. Many of these treatment and disposal facilities may not accept de minimis waste due to process limitations (many hazardous waste incinerators only handle liquids) or to prohibitions (e.g., license conditions, company policy, etc.). Thus, off-site commercial treatment and/or disposal of de minimis waste as a hazardous substance could potentially involve only a few (e.g., 10-20) facilities.

A somewhat opposite difficulty exists for treatment and/or disposal of de minimis waste as a municipal waste. There are currently operating in the United States more than 300 large municipal waste incinerators, several thousand small incinerators, and more than 18,000 municipal waste landfills (see Appendix A). A given large municipal incinerator may

000032

typically deliver the residue produced from waste combustion to several different landfills. For example, the reference 500 ton/day municipal incinerator will generate almost 250 tons (wet) of residue per day, and the reference 25-acre municipal waste landfill can only accept about 69 tons of waste per day for disposal. Thus, disposal of the residue generated by operating the incinerator will require at least 4 facilities the size of the reference landfill. This means that unlike hazardous waste, de minimis waste treated and disposed as a municipal waste could possibly be distributed through hundreds (if not thousands) of facilities. Not having the ability to consider the potential for this wide distribution could result in an overly conservative calculation of individual impacts.

To accommodate these potential difficulties, the computer codes are structured so that for the two principal off-site treatment/disposal options (municipal and hazardous waste options), the code user must input the following integers for each waste stream:

- the number of reference vehicles assumed to be used to transport the de minimis waste (see Chapter 3.0);
- the percent of the reference vehicle occupied by the de minimis waste;
- the number of reference waste treatment facilities; and
- the number of reference waste disposal facilities.

The codes then assume that the de minimis waste is evenly distributed among the transport vehicles and waste treatment/disposal facilities in accordance with the fractions formed by the reciprocals of the input integers. Use of this technique requires that the user of the codes have an understanding of:

(1) the distribution of de minimis waste within a given region, e.g., several widely scattered waste generators will involve more transport vehicles and treatment/disposal facilities than a few generators possibly grouped together; and

(2) the distributions and capacities of waste treatment and disposal facilities within a given region, e.g., the de minimis waste would be distributed through many more municipal waste transport vehicles and facilities than hazardous waste transport vehicles and facilities.

The information contained in Appendices A and B may be useful to the code user in making these determinations. Further information on inputing the above waste distribution indices is provided in Section 2.2.

2.2 Decision Indices

Several alternative options are available in the codes to process the waste and to determine its final disposition. All these options involve manipulation of specific waste form, packaging, or disposal technology

properties. In this report, these properties have been expressed through integer indices that refer to a specific procedure used in the calculation of impacts or determine a specific value of the environmental parameters. These indices, which will be referred to as the decision indices, basically denote the selection options available for a specific property. The selection options may be in the form of a specific calculational procedure or a specific value for an environmental property.

The use of user-input integer indices in this report to describe certain environmental or waste specific properties or to specify a particular calculation procedure is very similar to the approach used in the Impact Analyses Methodology Report (Ref. 5) prepared to support the draft EIS on Part 61 (Ref. 1).

In this report, two groups of indices are used to describe the available options. The first group is applicable to all the waste streams considered simultaneously and refers to the region in which the disposal facility is located and the disposal facility. The second group is waste stream specific and refers to the waste characteristics and the parameters necessary to resolve the questions raised in Section 2.1 on the maximum exposed individual. These indices are discussed below.

2.2.1 Region and Disposal Facility Indices

This first group of decision indices contains the following seven indices: the region index (IR) descriptive of the site environmental characteristics; the disposal facility index (IQ) specifying the type of facility; the length of facility operational life in years (ILFE); the overflow index (IOFL) signifying whether impacts due to possible disposal cell leachate accumulation and overflow are to be calculated; the environmental data index (IDAT) signifying whether generic or site-specific environmental parameters are to be used in the impact calculations; the length of disposal facility institutional control period in years (IINS); and the population index (IPOP) signifying whether the site is located in an urban or a rural environment. These indices are summarized in Table 2-5 and discussed below.

Region Index - IR

This index is a modified version of the IR index in Reference 6. The main rationale for this index is still applicable: to assign specific parameter values to the environmental characteristics affecting the calculation of short- and long-term impacts. Many environmental parameters, such as groundwater travel times or population densities, depend on the location where the disposed waste is situated. The parameters used in this report, which are functions of site environmental properties and affect the impact calculations, are listed in Table 2-6.

In this work, three reference site environments are characterized for the treatment and disposal of wastes. These reference environments are derived from 3 of the 4 regional disposal sites characterized in the Part

000034

TABLE 2-5 . Regional and Disposal Decision Indices

Index	Values and/or Function
IR - Region Index	1 - Humid, nonpermeable soil 2 - Humid, moderately permeable soil 3 - Semi-arid
IQ - Disposal Facility Index	1 - On-site generator 2 - Sanitary landfill 3 - Open dump 4 - Hazardous waste facility I 5 - Hazardous waste facility II
ILFE - Disposal Facility Life	Time in years that the disposal facility is operational
IOFL - Overflow index	Index denoting whether disposal cell overflow impacts are to be calculated
IDAT - Disposal/treatment Environment Index	0 - Generic parameter values to be used 1 - Site-specific atmospheric and population parameter values to be used 2 - Other site-specific environmental parameter values to be used 3 - Both 1 and 2 to be used
IINS - Institutional Control Period	Time in years between the closure of the facility and the loss of active institutional control
IPOP - Facility Environment Index	1 - Rural environment 2 - Urban environment

TABLE 2-6 . Region Index Dependent Properties

Symbol	Scenario	Environmental Property
TPOP	Transportation	Population density along the transportation route
TDOZ	"	Dose factor dependent on distance from the transport vehicle
POP	Operational	Population-weighted factor
WVEL	Operational	Average wind speed at the facility
AXOQ	Operational	Accident (X/Q) factor for hazardous waste disposal facility
EFAC	Operational	Dust mobilization factor for hazardous waste disposal facility
FSC	Construction	Soil-to-air transfer factor
FSA	Agriculture	Soil-to-air transfer factor
QFC	Groundwater	Dilution factor
TTM	"	Water travel time
DTTM	"	Incremental water travel time
TPC	"	Peclet number
DTPC	"	Incremental Peclet number
RET	"	Retardation coefficients
PRC	"	Infiltrating percolation
TSC	"	Contact time fraction
POPE	Erosion-air	Site selection factor
POPW	Erosion- and intruder-water	" " "
EERO	Erosion-air	Dust mobilization rate
EREC	Intruder-air	Dust mobilization rate

000036

61 draft EIS (Ref. 1), namely the northeast site (humid environment, high population density, impermeable site soils), the southeast site (humid environment, moderate population density, moderately permeable site soils), and the southwest site (semi-arid environment, low population density, permeable site soils). These are assigned IR indices of 1, 2, and 3, respectively. Each of these sites have been assigned parameter values for calculation of groundwater impacts, values for calculation of population impacts, and values for resuspension calculations. These parameter values are summarized in Appendix C.

Disposal Facility Index - IQ

This index denotes the eventual disposal location. There are five types of disposal facilities considered in this report: on-site generator disposal facility, two types of municipal disposal facilities distinguished by whether they are "well operated" or "poorly operated" (called sanitary landfill disposal and open dump, respectively), and two types of hazardous waste disposal facilities distinguished by different levels of groundwater impacts (see Section 2.1). The values of the IQ index corresponding to these facilities are presented in Table 2-5.

Disposal Facility Life - ILFE

This integer gives the disposal facility operational life in years. A duration of 20 years is assumed as the reference value for this index for municipal and hazardous waste disposal facilities; however, the code user may provide a site-specific value. This value is significant in the groundwater migration and exposed waste scenarios where the total activity disposed at the site is considered.

Overflow Index - IOFL

This index provides the code user an option on calculating impacts from a potential situation in which disposal cells are allowed to accumulate leachate. As discussed in Section 6.3.3, this could occur in a humid site environment at a disposal facility equipped with an effective impermeable liner or located at a site having soils with very low permeabilities. If the option is implemented, impacts are calculated for three scenarios, the first of which occurs during disposal facility operation while the last two occur after closure of the disposal facility. The first involves leachate removal and treatment during disposal facility operation. The treated leachate is discharged to a nearby stream where the contaminated water is used and consumed by an individual. The second involves overflow of the disposal cells to a nearby stream where the contaminated stream water is again used and consumed by an individual. The third involves treatment of leachate withdrawn from disposal cells by means of evaporation, in which case impacts from airborne releases from the evaporator are calculated for the surrounding population.

Some judgement is required in the use of this option by the code user. It would obviously not be appropriate in an arid climate (e.g., the southwest site).

Disposal Facility Environment Index - IDAT

This index indicates whether generic environmental parameter values are to be used during the calculation of impacts or site-specific values are to be used. Generic values are believed to be generally more conservative. The following outlines how this index is utilized in the code:

IDAT = 0 - Generic values are to be used.
IDAT = 1 - Site-specific meteorological and population parameter values are to be used (see Section 4.1.5 and Chapter 8.0).
IDAT = 2 - Site-specific operational and post-disposal impact parameter values are to be used (see Chapters 5.0, 6.0, and 8.0).
IDAT = 3 - Both of the above site-specific values (i.e., IDAT = 1 and IDAT = 2 cases) are to be input.

However, for the analysis of impacts associated with an on-site treatment/disposal facility, this index must be either 2 or 3, since generic parameter values for operational impact calculations cannot be assigned due to extreme variability of conditions.

Institutional Control Period - IINS

This integer is a property of the disposal technology utilized, and gives, in years, the length of time between the closure of the disposal facility and the loss of institutional control. That is, the time period between the closure of the disposal facility and the assumed loss of active institutional controls is denoted by IINS. It corresponds to the institutional control period of Reference 6, and is used in a similar manner. A typical institutional control period for a sanitary landfill or open dump would be expected to last only a few years, while the institutional control period for hazardous waste disposal facility would, by EPA regulation (Ref. 5), be expected to be on the order of 30 years.

Population Density Index - IPOP

This index indicates whether the population density around the facility can be assumed to be rural (index value of 1) or urban (index value of 2). This decision index is used as part of calculating population impacts from atmospheric transport of contaminants from incineration and disposal.

2.2.2 Waste Specific Indices

The second group of thirteen indices is generally referred to in this report as ISPC indices. These indices include the waste dispersibility index (ID); the waste accessibility index (IA); the waste packaging index (IK), which is comprised of two indices specifying the packaging used, and the fraction of metal packages recycled (if any), respectively; and the processing index (IP) which gives the treatment and disposal options assumed for the waste stream considered. The next four indices comprise the composition index (IC) and specify the fractions of the four major

000038

components of the waste physical form, i.e., combustible, metal, glass, and other. The final four indices comprise the distribution index (IX), and respectively specify the number of shipment vehicles, the fraction of the load each vehicle carries that is de minimis waste, the number of waste treatment facilities (if any), and the number of waste disposal facilities. These indices are summarized in Table 2-7, and are discussed below.

Dispersibility Index - ID

This index is a measure of the potential for suspension of radioactivity should the waste form be exposed to wind or mechanical abrasion. When the de minimis waste is delivered to waste treatment and disposal facilities, it will often be subjected to mechanical processes which will pulverize and abrade the waste material. Fine particulates may be generated which could be entrained by localized air currents and thus become available for inhalation by an individual. For example, if waste is sent to a municipal incinerator, it could be potentially sent through a size reduction process such as a hammermill which mechanically pounds and tears the input waste into small pieces. If the waste is incinerated, then a portion of the incinerator residue, which consists of ash and other non-combustibles, could be dispersed into the air during handling. Finally, the waste could be sent to a sanitary landfill where it is disposed. Typical operations consist of dumping the waste onto the ground, spreading it into layers using heavy construction equipment (e.g., bulldozers), and compacting it by running the construction equipment over the waste 4 or 5 times.

Most of the calculations addressing airborne dispersion of radionuclides by wind or mechanical means start out by assuming that the waste resembles a very dispersible material such as ordinary fine soil, powder, or incinerator ash. This is believed to be overly conservative for many waste forms, however, and a correction factor is incorporated to estimate the relative ability of the waste to disperse into the air in relation to a fine material. This is done through the dispersibility index (ID) which is used during calculations involving operational impacts.

Waste forms which are assumed to have a low probability of becoming suspended into respirable particles are assigned an index of (0). Those waste forms which are assumed to have a high potential of becoming suspended (such as incinerator ash) are assigned an index of (3). Waste forms which tend to crumble or fracture extensively and those forms that are subject to relatively rapid decomposition are assigned an index of (2). Waste forms consisting of a mixture of materials with dispersibility indices of (0) and (2) are assigned an index of (1).

Assumed values for the dispersibility index and associated multipliers, for various typical types of waste are given below. These values and multipliers are similar to those used in the final EIS on the Part 61 regulation to estimate accident impacts at a low-level waste disposal facility (Ref. 2), i.e., the multiplier is given by the relationship $10^{(ID-3)}$:

TABLE 2-7 . Waste Specific Decision Indices

Index	Values and/or Function
ID - Dispersibility Index	0 - near zero 1 - slight to moderate 2 - moderate 3 - severe
IA - Accessibility Index	1 - ordinary waste 2 - activated metals
IK - Packaging Indices	
First Index - IK1	0 - Not Packaged 1 - Metal Containers 2 - Other Containers
Second Index - IK2	Percent of metal packages recycled.
IP - Processing Index	Processing options 1 - Disposal 2 - Incineration/Disposal 3 - Sorting Option 1 4 - Sorting Option 2 5 - Sorting Option 3
IX - Distribution Indices	
First Index - IX1	Number of shipping vehicles
Second Index - IX2	Fraction of vehicle load that is de minimis waste
Third Index - IX3	Number of processing facilities
Fourth Index - IX4	Number of disposal facilities
IC - Composition Indices	
First Index - IC1	Weight percent of combustible waste
Second Index - IC2	Weight percent of metal waste
Third Index - IC3	Weight percent of glass waste
Fourth Index - IC4	Weight percent of other waste

000040

ID	Multiplier	Waste Form
3	1.0	dewatered sludge, ash, dirt, and other miscellaneous powders;
2	0.1	trash, dewatered resins;
1	0.01	waste solidified in cement;
0	0.001	waste solidified in vinyl ester styrene, sealed sources, activated metals.

Accessibility Index - IA

This index is similar to the accessibility index (I9) used in Reference 6. It is used to trigger a correction factor for waste streams which have a high metal content and the distribution of radionuclides within the waste is such that the radionuclides are not as easily accessible as other waste streams to transfer agents such as wind or water.

Most candidate de minimis waste streams are expected to consist of surface contaminated materials or materials in a readily soluble form. It is possible that some de minimis waste streams will consist of activated metals. The accessibility index is used to assign a correction multiplier in certain exposure calculations. These include certain direct exposure calculations as well as disposed waste leaching and groundwater migration calculations. A multiplier of 1 is assigned to an index value of 1 denoting ordinary waste forms, and a multiplier of 0.1 is assigned to an index value of 2 denoting activated metals.

The accessibility factor in this work has the practical effect of accounting for the self-shielding that would be associated with certain waste forms as well as the fact that leaching and groundwater migration would be limited to the corrosion rate of the metal.

Packaging Indices - IK1 and IK2

These indices indicate the type of packages used, and the fraction of metal packages that are recycled (if any). They affect the transportation exposures and the recycling scenarios. The first packaging index, IK1, specifies the packaging status of the waste and the container material (if any), and the second packaging index, IK2, indicates the percentage of metal packages that are recycled.

In this report, it is assumed that a given waste stream is shipped either packaged or unpackaged. If the waste is unpackaged, then no correction factors are required; however, if the waste is packaged, then the packing in the transportation vehicle is not as efficient. It is assumed to be 75% as efficient as transport without any containers and as a consequence, the transportation exposures are higher. This results from the fact that a given transport vehicle can carry only so much waste. For example, a 5-ton vehicle/dumpster can transport only a certain amount of waste and if the waste is packaged, transportation is less efficient.

Similarly, the amount and type of packages available for recycling will also be denoted by the packaging index. If the waste is unpackaged or if the packages are other than metal, the package recycling option is not viable; however, if metal packages are used, recycling exposures are directly proportional to the fraction of the waste contained in the metal packages. The methodology used to determine the recycling exposures is considered in Chapter 7.0.

Processing Index - IP

The variations in the processing technologies applied to a given waste stream affect the calculation of radiation exposures. The processing index is somewhat similar to the waste processing index of Reference 6. The primary variations utilized in this report are given in Table 2-7. Sorting options 1 through 3 are explained in Section 2.1 and Chapter 4.

Distribution Indices - IX1, IX2, IX3, IX4

These indices are used to resolve the uncertainties discussed in Section 2.1 about the maximum exposures that can be expected from the transportation, treatment, and disposal of the waste stream. They give the number of vehicles transporting the waste, the fraction of the vehicle volume that consists of de minimis waste (i.e., whether the vehicle is sole use or not), the number of incineration facilities (if any), and the number of disposal facilities, respectively. They affect the maximum exposures received by various personnel involved in the waste management cycle. For example, the indices IX1, and IX2 will affect the maximum exposed driver; each vehicle is assumed to have the same two drivers assigned to it, and the number of trips a vehicle can make in a year is limited to 750 trips to a municipal treatment/disposal facility, and 250 trips per year to a hazardous waste disposal facility (see Chapter 3.0).

Composition Indices - IC1, IC2, IC3, IC4

A given waste stream may be composed of up to four major subcomponents: combustible component, metal component, glass component, and other wastes component (including contaminated dirt). These indices denote the fractions of the waste stream that is one of these specific waste forms.

The composition indices are used during the waste processing scenarios (including incineration and sorting), and the recycle scenarios.

2.3 Overview of Pathway Analysis Methodology

There are many diverse mechanisms through which radionuclides contained in de minimis waste streams may be potentially released (i.e., mobilized from the waste and become accessible to a transport agent such as wind or water), transported through the environment (i.e., moved from one location to another through the atmosphere or soil by a transport agent), and thereby become accessible to humans through various pathways. Human

000042

access to the radioactivity may result either through direct human contact with contaminated material (e.g., inhalation of air, ingestion of water, or direct exposure to radiation) or indirectly through contaminated biota (through a multitude of pathways involving ingestion and exposure) which have come into contact with contaminated material. Each of these radionuclide release/transport/pathway combinations represent a complex series of interactions which are affected by a wide range of parameters such as waste properties, treatment or disposal facility environmental conditions, and operational procedures.

The basic procedure used in this report to describe these various radionuclide release/transport pathway combinations is the procedure developed in References 1, 2, and 6. The reader may consult these references for additional details. A summary, however, is provided below.

2.3.1 Generalized Approach

The generalized approach to calculating potential radiological impacts to an individual from a given release/transport/pathway scenario is as follows:

$$H = \sum_{i} \sum_{n} C_{in} \times I_{in} \times PDCF_{n} \qquad (2\text{-}1)$$

where impacts are summed over all waste streams (i) and over all individual radionuclides (n) in the waste, and where:

- H = the dose rate to the individual in units of mrem/yr;
- C_{in} = the effective concentration of the radionuclide n (Ci/m^3) in the ith waste stream considered;
- I_{in} = an interaction factor relating the concentration of the radionuclide in the de minimis waste stream to the concentration of the radionuclide at the biota access location; and
- $PDCF_n$ = the pathway dose conversion factor (PDCF) for that radionuclide in units of mrem/yr per Ci/m^3.

The "effective" waste concentration (C_{in}) is equal to the concentration in the de minimis waste times the ratio of the de minimis waste mass (or volume) to the total mass (or volume) of waste received at the landfill. It may also expressed as follows:

$$C_{in} = Q_{in}/V_{ann} \qquad (2\text{-}2)$$

where Q_{in} denotes the annual activity (Ci) of radionuclide n in the ith de minimis waste stream received at the disposal site, and V_{ann} denotes the annual volume (m^3) of de minimis plus non-radioactive waste received at the disposal site.

The factor (I_{in}) represents the movement of the radionuclide from the waste to a biota access location. The factor $PDCF_n$ represents the resulting human exposures resulting from a unit concentration of the radionuclide at the biota access location, and assuming that these exposures are received continuously over a year. (Exposures lasting less than a year are handled by incorporating an appropriate factor into I_{in}.) A biota access location is defined as any location where a human may receive an exposure to radioactive isotopes due to inhalation, ingestion, immersion in a contaminated cloud, or proximity to a gamma-emitting source.

A generalized equation similar to the above equation 2-1 is applicable for exposures to populations.

Further discussion on the general approach to calculating the release and transport of radionuclides through environmental pathways is provided in Section 2.3.2. A discussion of the pathway dose conversion factors is presented in Section 2.3.3.

2.3.2 Radionuclide Release and Transport

The interaction factor I (dropping the subscripts for simplicity) discussed in the previous section is composed of four subfactors (Ref. 6) as follows:

$$I = f_o \, f_d \, f_w \, f_s \qquad (2\text{-}3)$$

where:

f_o = time delay factor.
f_d = site design factor.
f_w = waste form and package factor.
f_s = site selection factor.

The factor (f_o) accounts for the radionuclide decay that would take place between the time the waste stream leaves the waste generator's hands and the time that contact is made by the transport agent; the factor (f_d) accounts for the inherent design characteristics of the waste transport vehicle, waste treatment facility, or waste disposal facility which influences the release and/or transport of radionuclides; the factor (f_w) accounts for the physical and chemical characteristics of the waste, at the time of the initiation of the release/transport scenario, that may inhibit radionuclide transfer by the transport agent; and the factor (f_s) includes the effects of the environment on radionuclide release/transport.

As a hypothetical example, assume that over a year a known volume of de minimis waste is delivered to a sanitary landfill. During disposal operations, the waste is crushed and mixed with soil, and a portion of the waste is dispersed into the air as particulates, combining with the dust raised during disposal operations. To be able to calculate the possible radiological exposures received by a site worker resulting from inhalation

000044

of the particulates, one must first relate the radionuclide concentrations originally in the de minimis waste to the radionuclide concentrations in the air breathed by the site worker.

The time delay factor (f_0) is given by $\exp(-\lambda T)$, where λ is the radionuclide-specific decay constant and T is the period between the time that the waste leaves the waste generator's hands and the time that the waste is disposed at the landfill. This would probably be only a few days, however, and this factor could be assumed to be equal to unity for this example.

The site design factor (f_d) would account for the potential for uncontaminated soil to mix with the waste during the disposal, so only a fraction of the particulates released into the air would be from the disposed waste. The remaining particulates would be from the uncontaminated soil. If, in this hypothetical example, it is assumed that the waste is mixed with soil at a ratio of 4 to 1, then f_d would be equal to 0.8.

The calculations in this example are based on the assumption that the waste will disperse into the air in a similar manner as the site soil. However, the waste will probably be much less dispersible than ordinary soil. This is accounted for by the waste form and package factor (f_w) which corrects for the relative ability of the waste to disperse into the air as respirable particulates. In this hypothetical example, assume that the dispersibility of the waste is ten times less than that of natural soil. Thus, (f_w) would for this example be equal to 0.1.

The site selection factor (f_s) would account for the tendency for construction operations to raise dust at the site as well as the fraction of a year that the worker works at the site. The "tendency for construction operations to raise dust" could depend upon a number of variables such as the type of construction activity performed or the silt content of the soil. Equations have been developed to approximate this, however, and for this example assume that this parameter is determined to be equal to 1×10^{-6}. The fraction of a year that the worker works at the site is assumed to be equal to 0.237 (2080 hrs/8760 hrs). The site selection factor for this hypothetical case is therefore equal to 2.37×10^{-7}.

Putting the four factors together, one arrives at a value for (I) equal to 1.9×10^{-8}. In other words, the worker in this example would be breathing over the course of a working year an average radionuclide concentration in air equal to the radionuclide concentration in the de minimis waste (C) times I. Assuming that all waste received at the site contains an average concentration of a given radionuclide equal to 1 Ci/m^3, the radionuclide concentration in air would average 1.9×10^{-8} Ci/m^3 during the time that the worker is at the site.

However, the actual average radionuclide concentration in the air would not be this large, since only a small fraction of the waste delivered to the landfill would actually consist of de minimis waste. To determine actual average radionuclide airborne concentrations during the time the

worker is at the site, the de minimis concentration would be replaced by a new "effective" waste concentration (C_{in}). This concentration (C_{in}) is equal to the concentration in the de minimis waste times the ratio of the de minimis waste mass (or volume) to the total mass (or volume) of waste received at the landfill (see equation 2-2). Using the current example, if the de minimis waste mass annually received at the site is only a thousandth of the total annual mass received, than the actual average airborne concentration over the time the worker spends at the site would be equal to $1.9 \times 10^{-8} \times 1.0 \times 10^{-3} = 1.9 \times 10^{-11}$ Ci/m^3.

There are of course a number of scenarios which may be used calculate release and transport of radionuclides at different points in time as waste is transported, treated, and disposed. However, practically all release/transport scenarios may be structured in a similar manner. Throughout this report, the above four factors are repeatedly referenced, although the calculational details of each factor will vary considerably depending upon the particular scenario considered.

2.3.3 Pathway Dose Conversion Factors

Once the concentration of a given radionuclide is determined at a given biota access location, the interaction of the radionuclide (and the radiation it emits) with human tissue must be quantified and the resultant dose rate determined. This is done using a series of radionuclide specific parameters known as pathway dose conversion factors (PDCF) which are independent of the original means of contamination. To illustrate, consider the previous example of the worker at the landfill who is immersed in a cloud of air containing a known concentration of a particular radionuclide (Ci per m^3 of air). Potential exposures to the worker could result from the following five pathways:

- o inhalation of the contaminated air;
- o direct ionizing radiation exposure from being immersed in the contaminated air;
- o direct ionizing radiation exposure from contaminated dust which has settled to the ground surface;
- o inhalation of contaminated dust which has been resuspended from the ground surface; and
- o immersion in the contaminated dust which has been resuspended from the ground surface.

The resulting impacts would be determined by a series of equations describing the movement and uptake of the radioactivity. Factors such as the breathing rate of the individual would be considered, in addition to the resuspension rate of the deposited radionuclides, and so forth. A series of dose conversion factors (termed in this report <u>fundamental</u> dose conversion factors (DCF) to distinguish them from PDCF's) would be used to determine resulting exposures. (For example, once a known quantity of a given radionuclide is inhaled, a dose rate can be determined by multiplying by an appropriate inhalation DCF). The total dose rate would be determined by adding the dose rate obtained from all five pathways.

Consider, however, that one may be interested in calculating dose rates to several individuals at different times. In addition, the same five pathways would be appropriate for other disposal facilities besides a sanitary landfill (e.g., an open dump or possibly a hazardous waste facility). It would be highly inconvenient to repeatedly calculate radionuclide movement and uptake through the five example pathways and repeatedly sum the result. What is done, then, is to create a single pathway dose conversion factor for a given radionuclide and organ of interest which is a combination of the five example pathways. That is, given a unit concentration (1 Ci/m^3) of a radionuclide in air, dose rates from all five pathways are summed to form a single effective "pathway dose conversion factor." Different pathway dose conversion factors may be created for different combinations of environmental pathways.

The pathway dose conversion factors used in this report are described in Tables 2-8 and 2-9. All PDCF's are given in units of mrem/yr per Ci/m^3 in the media at the biota access location. Depending upon the situation, the media may consist of a solid (Ci per m^3 of soil), a liquid (Ci per m^3 of water), or gas (Ci per m^3 of air). PDCF's are calculated for all 85 radionuclides considered in this report, for each solubility class appropriate to a given radionuclide, and for 9 different individual human body organs. The nine organs considered include the whole body, lung, kidney, liver, red bone marrow, bone surface, stomach wall, lower large intestine, and thyroid. An effective whole body dose equivalent based upon ICRP-26 methodology is also calculated for each radionuclide and appropriate solubility class.

Different PDCF's are used appropriate to the given situation. For example, PDCF-6 would be used to calculate impacts to persons using water withdrawn from a well, while PDCF-7 would be used to calculate impacts to persons withdrawing water from a surface stream. Some PDCF's are composed of primary and secondary pathways.

The PDCF's used in this report are generic. That is, they are constructed assuming a set of parameters typical of most environmental conditions and human actions. Different assumptions, however, could be incorporated depending upon site specific environmental conditions.

The details of the pathway dose conversion factors, including the calculational formulas, environmental transfer factors, and fundamental dose conversion factors assumed (which are obtained using ICRP-30 methodology), are given in Appendix D of this report.

TABLE 2-8 . Pathway Dose Conversion Factor Components

PDCF	Biota Access Media	Uptake Pathways	
1*	Air	Inhalation (air)	(p)**
		Direct Radiation (air)	(p)
		Inhalation (soil)	(s)**
		Direct Radiation (area)	(s)
		Direct Radiation (air)	(s)
2*	Air	Inhalation (air)	(p)
		Direct Radiation (air)	(p)
		Inhalation (soil)	(s)
		Direct Radiation (area)	(s)
		Direct Radiation (air)	(s)
3	Air	Inhalation (air)	(p)
		Direct Radiation (air)	(p)
		Food (air)	(p)
		Inhalation (soil)	(s)
		Direct Radiation (area)	(s)
		Direct Radiation (air)	(s)
4	Soil	Food (soil)	
5	Soil	Direct Radiation (volume)	
6	Well Water	Food (water)	(p)
		Inhalation (soil)	(s)
		Direct Radiation (area)	(s)
		Direct Radiation (air)	(s)
7	Open Water	Food (water)	(p)
		Fish (water)	(p)
		Inhalation (soil)	(s)
		Direct Radiation (area)	(s)
		Direct Radiation (air)	(s)

(*) PDCF-1 is used for exposures that last approximately for an entire year for several years (chronic exposures), while PDCF-2 is used for exposures that occur only once for considerably less than a year (acute exposures).

(**) (p) = primary pathway, (s) = secondary pathway.

000048

TABLE 2-9 . Access Location-to-Human Pathway Descriptions

Pathway Designation	Description
Food (soil)	This uptake pathway includes a total of three subpathways and denotes uptake of radionuclides originating in plants via soil-to-root transfer from contaminated soil: plant-to-human plant-to-animal-to-human plant-to-animal-to-product-to-human
Food (air)	This uptake pathway includes a total of six subpathways and includes the above three food (soil) subpathways resulting from uptake of radionuclides originating on plant surface via deposition from contaminated air and the same three food (soil) subpathways resulting from fallout contamination of the ground.
Food (water)	This uptake pathway includes a total of nine subpathways and includes all the food (soil) pathways resulting from radionuclides originating on plant surfaces via irrigation deposition from contaminated water and from irrigation contamination of the ground. The following three subpathways in addition to the plant pathways are added: water-to-human water-to-animal-to-human water-to-animal-to-product-to-human
Ingestion (fish)	Uptake of radionuclides from eating fish caught in contaminated open water.
Inhalation (air)	Uptake of radionuclides from breathing air contaminated due to suspension of contaminated soil particulates by human activities.
Inhalation (soil)	Uptake of radionuclides from breathing air contaminated due to natural suspension and volatilization of surface soil.
Direct Radiation (volume)	Direct exposure to ionizing radiation from standing on ground homogenously contaminated.
Direct Radiation (area)	Direct exposure to ionizing radiation from standing on ground whose surface is contaminated.
Direct Radiation (air)	Direct exposure to ionizing radiation from standing in air homogenously contaminated.

CHAPTER 2.0 REFERENCES

(1) U.S. Nuclear Regulatory Commission, Office of Nuclear Materials Safety and Safeguards, "Draft Environmental Impact Statement on 10 CFR Part 61 : Licensing Requirements for Land Disposal of Radioactive Waste," NUREG-0782, September 1981.

(2) U.S. Nuclear Regulatory Commission, Office of Nuclear Materials Safety and Safeguards, "Final Environmental Impact Statement on 10 CFR Part 61 : Licensing Requirements for Land Disposal of Radioactive Waste," NUREG-0945, November 1982.

(3) U.S. Environmental Protection Agency, "Guidance Manual for the Classification of Solid Waste Disposal Facilities" (Draft), EPA Office of Solid Waste, November 1979.

(4) U.S. Environmental Protection Agency, "Landfill Disposal of Solid Waste," Federal Register Notice, 44 FR 18138, March 26, 1979.

(5) U.S. Environmental Protection Agency, "Hazardous Waste and Consolidated Permit Regulations," Federal Register Notice, 45 FR 33066-33587, May 19, 1980.

(6) Oztunali, O. I., et.al., "Data Base for Radioactive Waste Management, Volume 3, Impacts Analyses Methodology Report," USNRC Report NUREG/CR-1759, November 1981.

(7) Wild, R.E., et.al., "Data Base for Radioactive Waste Management, Volume 2, Waste Source Options Report," USNRC Report NUREG/CR-1759, November 1981.

(8) U.S. Environmental Protection Agency, "Final Rule on Management of Empty Containers," Federal Register Notice, 47 FR 36092, August 18, 1982.

000050

3.0 WASTE TRANSPORTATION IMPACTS

This chapter presents the methodology for calculating radiation exposures resulting from transportation of de minimis waste from the generator to a municipal incinerator, to a municipal waste landfill facility, or to a hazardous waste incineration or disposal facility. These radiation exposures are dose rates in units of mrem/year to the transportation workers and person-mrem/yr to the population surrounding the travel route. Consequently, the radiation exposures are presented in sections addressing occupational and population exposures. However, first a background section discussing the assumptions used in the dose calculational methodology is presented.

3.1 Background

In order to calculate transportation exposures, one needs to relate the radionuclide concentration in the waste, C_W (in units of Ci/m^3 or Ci per metric ton (MT)), to a dose rate, $D_W(x)$ (in units of mrem/year) at some distance (x) outside the vehicle; or alternatively, the total activity transported, Q_W (in units of Ci/year) to the dose rate $D_W(x)$. This outside location can be adjacent to the vehicle for a transportation worker, i.e., at 1 meter, or at a considerable distance for populations. Consequently, the relationship used to calculate the radiation exposures must be expressed in terms of the distance (x) from the surface of the vehicle.

This section presents two potential methodologies that could be used to calculate the radiation exposures. The first method is referred to as the "PDCF-5 Method," and utilizes previously derived external radiation pathway dose conversion factors coupled with several correction factors to obtain the dose rates. The second method is referred to as the "6CEn Method," which utilizes the empirical formula for the dose rate 1 ft from a point source. All the formulae derived are radionuclide specific, and in order to determine the full exposures the formulae must be summed over all the applicable radionuclides.

<u>PDCF-5 Method</u>

One potential way to calculate exposures from transportation of waste appears to be the use of PDCF-5 (see Appendix D).

PDCF-5 is the radionuclide specific exposure rate 1 meter above soil having an infinite thickness and infinite lateral extent, and contaminated uniformly with a given radionuclide of unit concentration (i.e., 1 Ci/m^3). In order to derive PDCF-5 for a given radionuclide, the energies and abundances of each gamma-ray emitted were used to derive an individual dose rate, and then the dose rates were summed over all the gammas emitted by the radionuclide. In this report, this factor is used in conjunction with several derived correction factors which permit the dose rate at distance (x) from the surface of the waste to be expressed in terms of the applicable dose rate 1 meter away from the surface of the waste. The following presents a derivation of these correction factors.

The geometry of the vehicle transporting the waste, which is assumed to have thickness (t), and the exposure at point P a distance (x) away from the surface of the vehicle is illustrated below:

```
|        |
| Sw     |      μa
| μw     |<----x---->o P
| pw     |
|<---t--->|
```

The dose rate at point P is dependent on distance (x) and is proportional to the flux of photons at P. The flux $\phi(x)$ in units of photons per m^2-sec from an infinite slab source is given by the following formula (Ref. 1):

$$\phi(x) = B_x \, [E_2(\mu_a x) - E_2(\mu_a x + \mu_w t)] \, S_w/(2\mu_w) \qquad (3\text{-}1)$$

where the symbols correspond to the following:

B_x = Build-up factor at distance x (dimensionless)
μ_a = linear-attenuation coefficient in air (a) in m^{-1}
x = distance from the source plane, in meters,
μ_w = linear-attenuation coefficient in waste (w) in m^{-1}
t = thickness of the source slab, in meters,
S_w = Volume distributed source in photons/m^3-sec, and where
E_2 = Exponential integral of order 2 (Ref. 2), given by

$$E_2(x) = \int_1^{\infty} dy \; e^{-xy}/y^2$$

For a thick slab, thickness (t) is large, and $E_2(\mu_a x + \mu_w t)$ goes to zero. Consequently, one has the following:

$$\phi(x) = B_x \, E_2(\mu_a x) \, S_w/(2\mu_w) \qquad (3\text{-}2)$$

The dose rate, $D_w(x)$, at distance (x) is proportional to the flux; designating the proportionality variable by K, one has

$$D_w(x) = K \, B_x \, E_2(\mu_a x) \, S_w/(2\mu_w) \qquad (3\text{-}3)$$

0000520

For radionuclides uniformly distributed within a layer of dirt (d) having infinite thickness and lateral extent, the dose rate calculated at one meter (1m) would be:

$$D_d(1m) = K\ B_1\ E_2(\mu_a 1m)\ S_d/(2\mu_d) \tag{3-4}$$

Dividing these last two equations, and assuming that the buildup within waste and dirt will be approximately the same, one obtains:

$$D_w(x) = D_d(1m)\ \frac{S_w\ \mu_d\ E_2(\mu_a x)\ B_x}{S_d\ \mu_w\ E_2(\mu_a 1m)\ B_1} \tag{3-5}$$

Given the relationship $M = (\mu/p)$, where (M) is the mass-attenuation coefficient in units of m^2/g and (p) is the density of the material in units of g/cm^3, and assuming that $M_d = M_w$ for most gamma energies and most materials lighter than lead (Ref. 3):

$$D_w(x) = D_d(1m)\ \frac{S_w\ p_d\ E_2(\mu_a x)\ B_x}{S_d\ p_w\ E_2(\mu_a 1m)\ B_1} \tag{3-6}$$

However, the dose rate at 1m from the dirt layer is related to the dose conversion factor PDCF-5. The following equation is applicable:

$$D_d(1m) = \text{PDCF-5}\ C_d, \tag{3-7}$$

where C_d is the radionuclide concentration within the dirt in units of Ci/m^3. In addition, since the photon source term is proportional to the radionuclide concentration, the following relationship is true:

$$C_w = C_d\ (S_w/S_d) \tag{3-8}$$

Therefore, one obtains:

$$D_w(x) = \text{PDCF-5}\ C_w\ \frac{p_d\ E_2(\mu_a x)\ B_x}{p_w\ E_2(\mu_a 1m)\ B_1} \tag{3-9}$$

or

$$D_w(x) = PDCF\text{-}5\ C_w\ (p_d/p_w)\ DF \tag{3-10}$$

where DF stands for the "distance factor" defined by the following:

$$DF = \frac{E_2(\mu_a x)}{E_2(\mu_a 1m)} \frac{B_x}{B_1} \tag{3-11}$$

Equation (3-10) is the general form for the dose rate from a given radionuclide at distance (x) from an infinite thickness and infinite lateral extent slab source, for an exposure duration of one year. For more than one radionuclide this equation is summed over all the radionuclides present in the waste.

Three additional dimensionless correction factors appear to be necessary to complete equation (3-10). The first one is the correction factor due to the effect of the stacking efficiency of the packages (if any) during transportation, PK. The second one is the correction factor due to the finite lateral extent of the source, CF. The third one is the exposure duration factor, EDF, to account for an exposure period of less than one year. Putting these factors in results in the final equation:

$$D_w(x) = C_w\ (p_d/p_w)\ f_c\ PDCF\text{-}5 \tag{3-12}$$

where, for calculational convenience, four correction factors have been redefined into f_c, i.e.:

$$f_c = PK\ CF\ DF\ EDF \tag{3-13}$$

The factors CF and DF are discussed below. The factors EDF and PK are discussed later in the chapter.

The transportation vehicle is finite in all dimensions. One cannot do anything about the thickness of the slab (an infinitely thick slab is a conservative assumption); however, one can introduce a correction factor, CF, for the finite lateral extent of the vehicle. This factor is based on Figure 3.1 illustrating the vehicle and the transportation worker. As shown, the vehicle may be modeled as a disc source of infinite thickness and finite radius.

As shown in Figure 3.1, the transportation worker sees a vehicle of radius r_1 whereas the formulae given above are for sources infinite in all dimensions. Based on this figure, the following correction factor is applicable (Ref. 4):

000054

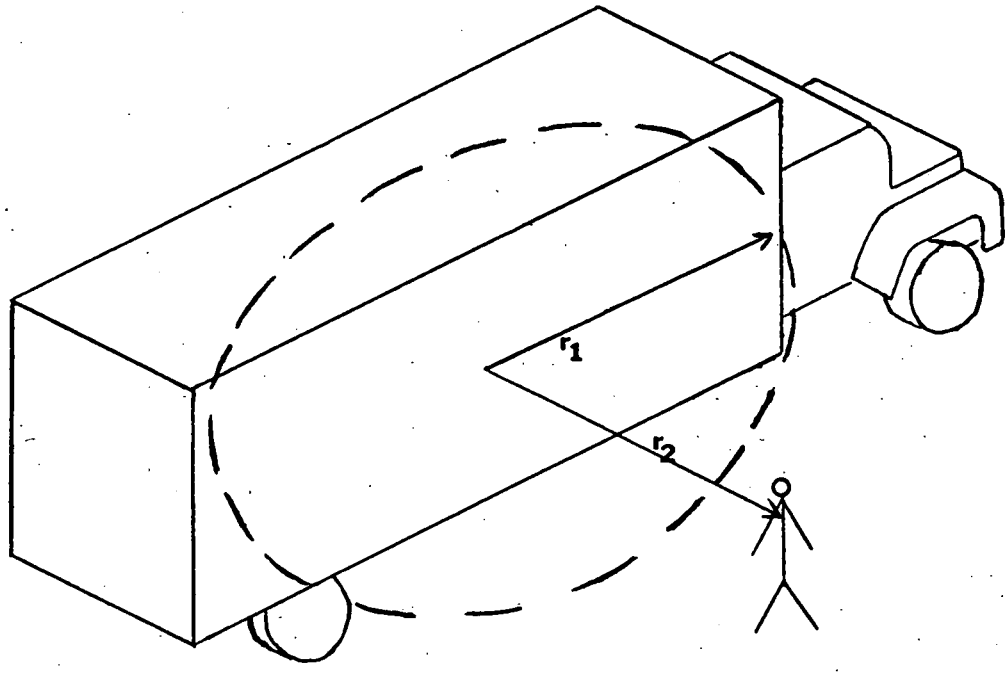

EXPOSURE GEOMETRY

FIGURE 3.1

$$CF = [E_1(\mu_a r_2) - E_1(\mu_a r_1)]/E_1(\mu_a r_2) \quad (3\text{-}14)$$

The function E_1 can be approximated for $0<x<1$ in the following manner with an error of less than 2×10^{-7} (Ref. 2):

$$E_1(x) = -\ln(x) + a_0 + a_1 x + a_2 x^2 + a_3 x^3 + a_4 x^4 + a_5 x^5 \quad (3\text{-}15)$$

where the constants a_0 through a_5 are specified to be the following:

a_0 = -.57721566 a_1 = .99999193
a_2 = -.24991055 a_3 = .05519968
a_4 = -.00976004 a_5 = .00107857

Assuming a typical μ_a value of 0.0097 m^{-1}, this implies that the above polynomial approximation of E_1 is adequate for up to 100 meters. Values for CF for various distances r_2 from the center of the source are presented in Table 3-1 for several source radii, r_1.

TABLE 3-1 . Correction Factor - CF

	r_1			
r_2	2m	4m	10m	20m
1 m	1.949E-1	3.409E-1	5.462E-1	6.936E-1
5 m	2.826E-2	9.376E-2	2.992E-1	5.103E-1
10 m	9.608E-3	3.626E-2	1.668E-1	3.749E-1
20 m	3.283E-3	1.292E-2	7.283E-2	2.204E-1
30 m	1.785E-3	7.086E-3	4.209E-2	1.439E-1
40 m	1.171E-3	4.664E-3	2.828E-2	1.024E-1
50 m	8.507E-4	3.393E-3	2.078E-2	7.756E-2

The distance factor, DF, can be evaluated through various polynomial approximations available for the buildup factor B_x, and E_2. For the buildup factor, a Berger approximation will be utilized. For a given argument ($y=\mu_a x$), B(y) can be approximated by the following for gamma energies of 0.7 MeV (Ref. 5):

$$B(y) = 1 + 0.95\,y + 0.35\,y^2 \quad (3\text{-}16)$$

For the exponential integral of order 2 of argument (x), $E_2(x)$, the following relation is used:

000056

$$E_2(x) = e^{-x} [1 - x e^{x} E_1(x)] \quad (3\text{-}17)$$

with $E_1(x)$ given by the above approximation. Values for DF are presented in Table 3-2 for various distances in meters.

TABLE 3-2 . Distance Factor - DF

x	Ratio of E Functions	Ratio of Buildup Factors	DF
1 m	1.000E+0	1.000E+0	1.000E+0
2 m	9.624E-1	1.009E+0	9.713E-1
5 m	8.745E-1	1.037E+0	9.071E-1
10 m	7.657E-1	1.085E+0	8.311E-1
20 m	6.117E-1	1.187E+0	7.257E-1
30 m	5.020E-1	1.294E+0	6.497E-1
40 m	4.185E-1	1.408E+0	5.893E-1
50 m	3.525E-1	1.529E+0	5.389E-1

One must be cautious about specifying p_W and C_W. The density parameter p_W is the density of the waste form as averaged over the entire volume of waste in the truck. If it is assumed that the entire waste shipment in the transport vehicle is dedicated to de minimis waste, then the density used in the calculations would correspond to the density of the de minimis waste. If it is assumed that only a small portion of the waste in the transport vehicle is de minimis waste, then the density used in the calculations would correspond to the density of the non-radioactive waste. Typical densities of municipal waste transported in a compactor truck are in the range of 0.30 to 0.42 g/cm^3 (500-700 lb/yd^3). Typical densities of hazardous wastes are on the order of 1 g/cm^3 (1685 lb/yd^3).

Similarly, C_W is the concentration over all the waste volume. Assuming that the de minimis waste is homogeneously distributed within a truck shipment, C_W is the total activity in the waste in the truck divided by the total volume in the truck.

6CEn Method

The second method that could be used to calculate the transportation dose rates is the method referred to as the "6CEn Method." In this method, it is assumed that the dose rate, D, in units of R/hr, 1 ft from a gamma-emitting point source is given by the following empirical formula:

$$D = 6CEn$$

where

C = Source strength in Curies
E = Average gamma energy per disintegration (MeV)
n = Number of gammas emitted per disintegration

This empirical formula, in conjunction with correction factors, can be used to calculate the transportation exposures. These correction factors involve the following:

(1) Self-shielding of the package
(2) Buildup resulting from the package
(3) Geometry factor of the package
(4) Distance from the assumed point source, and
(5) Multiple packages in a transportation geometry.

These correction factors are straightforward and can be found in the literature (Ref. 1). The major reason this method is not utilized in this report is the fact that for occupational exposures to a person standing next to the vehicle, the vehicle does not look like a point source; the vehicle is a lot larger than the person and it looks more like a slab source.

3.2 Occupational Exposures to Transportation Workers

Each vehicle is assumed to have two drivers that alternate the driving responsibilities. The vehicle will also have some other attendants to ensure that the vehicle is loaded properly, and to ensure that it is unloaded properly. These other workers are assumed to be employed by the generating and disposal facilities and are not considered in this section.

The vehicle is assumed to go to the waste generator, wait there about 1 hour until it is loaded, and drive to the municipal landfill (or municipal incinerator assumed to be colocated with the disposal facility) or hazardous waste facility (or hazardous waste incineration facility assumed to be colocated with the disposal facility). Distances are assumed to be on the order of 10 miles for a municipal landfill and about 100 miles for the hazardous waste facility, and are assumed to result in travel times of 0.5 hours and 3.5 hours, respectively. The vehicle is then assumed to wait at the gate of the disposal facility for about an hour to get processed and weighed, and to unload the waste in another 0.5 hours. After this, the vehicle will drive back to the generator and pick up another load. This implies that the drivers will be at or near the vehicle for about three hours for municipal landfill shipments and about six hours for hazardous waste facility shipments.

For the municipal landfill shipments, it is assumed that the drivers are in the cab of the vehicle for about 2 hours, and adjacent to the vehicle for about 0.5 hours. The remaining 0.5 hours, they are assumed to be too far from the vehicle to get appreciable radiation exposures. Consequently, the following is applicable for the correction factor for the finite extent of the source vehicle (CF, given by equation 3-14): (1) during the

000058

period they are in the cab, they are exposed to a gamma source from the front of the vehicle (shielding provided by truck walls is conservatively neglected) that is approximately 2 meters in radius (i.e., r_1 = 2 m), and (2) during the period they are in the vicinity of the vehicle, they are exposed to a gamma source that is approximately 4 meters in radius. These two radial values imply correction factors for the finite extent of the source of 0.195 for the time they are in the cab of the vehicle (2 hours), and 0.341 for the time they are adjacent to the vehicle (0.5 hours), or an overall correction factor of 0.187.

These values can be utilized together with equation 3-12 to obtain the dose rate as calculated at 1 meter:

$$D_w(1m) = C_w\ (p_d/p_w)\ f_c\ PDCF\text{-}5 \qquad (3\text{-}18)$$

where f_c stands for the product of the four correction factors, PK, CF, DF and EDF.

The factor CF is calculated to be 0.187 for the municipal landfill shipments, and 0.191 for the hazardous waste facility shipments (5 hours in the cab, and 0.5 hours in the vicinity of the vehicle). DF is assumed to be unity.

The factor EDF is different for municipal landfill and hazardous waste facility shipments. It can be calculated in the following manner for transportation to the municipal landfill:

$$EDF = (M_{tot}/5\ \text{tons/trip})\ (3\ \text{hours/trip}/8760\ \text{hours/year}) \qquad (3\text{-}19)$$

where M_{tot} is the total weight of the waste transported in tons/year. In this estimate, 5 tons has been assumed to be the capacity of the vehicle (Ref. 6), and 3 hours is the estimated travel time to the municipal landfill. The EDF for a hazardous waste facility shipment would be twice that of the municipal facility shipment, i.e.,

$$EDF = (M_{tot}/5\ \text{tons/trip})\ (6\ \text{hours/trip}/8760\ \text{hours/year}) \qquad (3\text{-}20)$$

However, each driver is theoretically limited to approximately 750 trips (i.e., three trips per day) for municipal landfill shipments, and about 250 trips (one trip per day) for hazardous waste facility shipments. Consequently, during the evaluation of equation 3-19 for the maximum individual exposure calculation, the value of ($M_{tot}/5$) is compared to 750, and the smaller of the two values is used. Similarly, during the evaluation of equation 3-20, ($M_{tot}/5$) is compared to 250, and the smaller of the two values is used.

The factor PK is dependent upon the packaging index, IK. If it is assumed that a fixed volume is available within a vehicle to contain the transported waste, then the packaging efficiency within the vehicle volume would be reduced for packaged waste to about 75% of that which can be achieved by unpackaged waste. Consequently, the amount of waste which can be carried by the reference 5-ton truck would be reduced for packaged waste by a factor of 0.75. In addition, the overall density of the waste as averaged over the vehicle volume would also be reduced by a factor of 0.75, as would the overall radionuclide concentration within the vehicle volume. The density and concentration effects cancel, although the effects caused by the increased number of shipments would still remain. Consequently, the dose rate will increase by the inverse of 0.75 since more shipments are required.

Some final points involve the options available to the code user to specify the fraction of a waste shipment that contains de minimis waste, as well as the number of transport vehicles involved. If the vehicle used in the transportation of de minimis waste is not a sole use vehicle, i.e., if it picks up waste from multiple sources some having de minimis waste and some having non-radioactive waste, an effective density of the waste in the vehicle is calculated using the de minimis waste density and a generic value for the non-radioactive waste in proportions specified by the second distribution index IX2 (see Chapter 2.2.2). Assuming that the de minimis waste is homogeneously distributed within the vehicle volume, the effective density, p_{eff}, is given as

$$p_{eff} = [IX2\ p_w + (100 - IX2)\ p_{ref}]/100$$

where p_w is the de minimis waste density input by the code user, and p_{ref} is an average non-radioactive waste density. p_{ref} is assumed to be 0.27 g/cm^3 for shipment of municipal waste and 1 g/cm^3 for shipment of hazardous waste. The average radionuclide concentration within the shipment volume would be reduced proportional to the fraction of the transported volume that is de minimis waste, although the number of required shipments would also be proportionately increased.

The first distribution index, IX1, specifies the number of transport vehicles used to transport the de minimis waste. Assuming that the de minimis waste is evenly distributed through the transport vehicles, then the dose rate to the maximum exposed individual (the driver) is reduced by a factor equal to IX1.

The use of the above distribution indices can theoretically lead to a situation in which the number of required shipments exceeds the shipments that can be made by the vehicles specified by IX1. For example, this could possibly result if IX1 and IX2 were both very low numbers and the amount of de minimis waste to be transported was large. This has no effect on the calculation of maximum individual exposures, since each transport vehicle is limited to a maximum number of waste shipments per

000060

year, and the codes automatically place an upper limit on maximum exposed individuals as discussed above. For population impacts, however, there is a theoretical possibility of underestimating total impacts. This is prevented by determining population impacts based upon the total number of shipments required rather than the total number of transport vehicles specified. (That is, if the user underspecifies the number of required transport vehicles, the code effectively adds sufficient vehicles to transport all the waste.) Thus there would be no effect on the cumulative population exposures other than that provided by the change in the effective waste density.

3.3 Population Exposures

There are several similar calculational techniques in the literature for obtaining population exposures resulting from transportation of radioactive waste (Refs. 5, 7, 8). In this report the methodology given in Reference 7 will be utilized; the dose rate per shipment is given by

$$D = 4[PLK/V(5280)^2]\int_{x_m}^{\infty} dx \int_{-\infty}^{\infty} dr\ \exp(-\mu_a r)B(\mu_a r)/[r(r^2-x^2)^{1/2}] \qquad (3\text{-}21)$$

where

- D = Dose rate (person-mrem/trip)
- P = Population density (people/mile^2)
- L = Length of segment (miles/trip)
- K = Source strength (mrem-ft^2/hour)
- V = Speed of the vehicle (miles/hour)
- x_m = Lower boundary of exposure distance (ft)
- μ_a = Linear attenuation coefficient in air (ft^{-1})
- r = Integration variable (ft)
- B = Berger build-up factor (dimensionless)

This equation can be transformed into an equivalent equation utilizing the illustration presented in Figure 3.2, where x_m is also indicated.

Substituting for r, and dr, yields the following:

$$D = 4[PLK/V(5280)^2]\int_{x_m}^{\infty} dx \int_{0}^{\infty} dy\ \exp(-\mu_a r)B(\mu_a r)/[x^2+y^2] \qquad (3\text{-}22)$$

This equation is more manageable than the previous equation, e.g., it is easier to integrate. To solve for D, this equation is first integrated using a 16 point double-Gaussian numerical integration routine with the variables P, L, K, and V assumed to be unity, and with B(x) given by equation 3-16. The results of this integration are presented in Table 3-3 for several values of x_m where TDOZ is in units of (mi/ft)^2.

The population dose rate in person-mrem/trip is then given as:

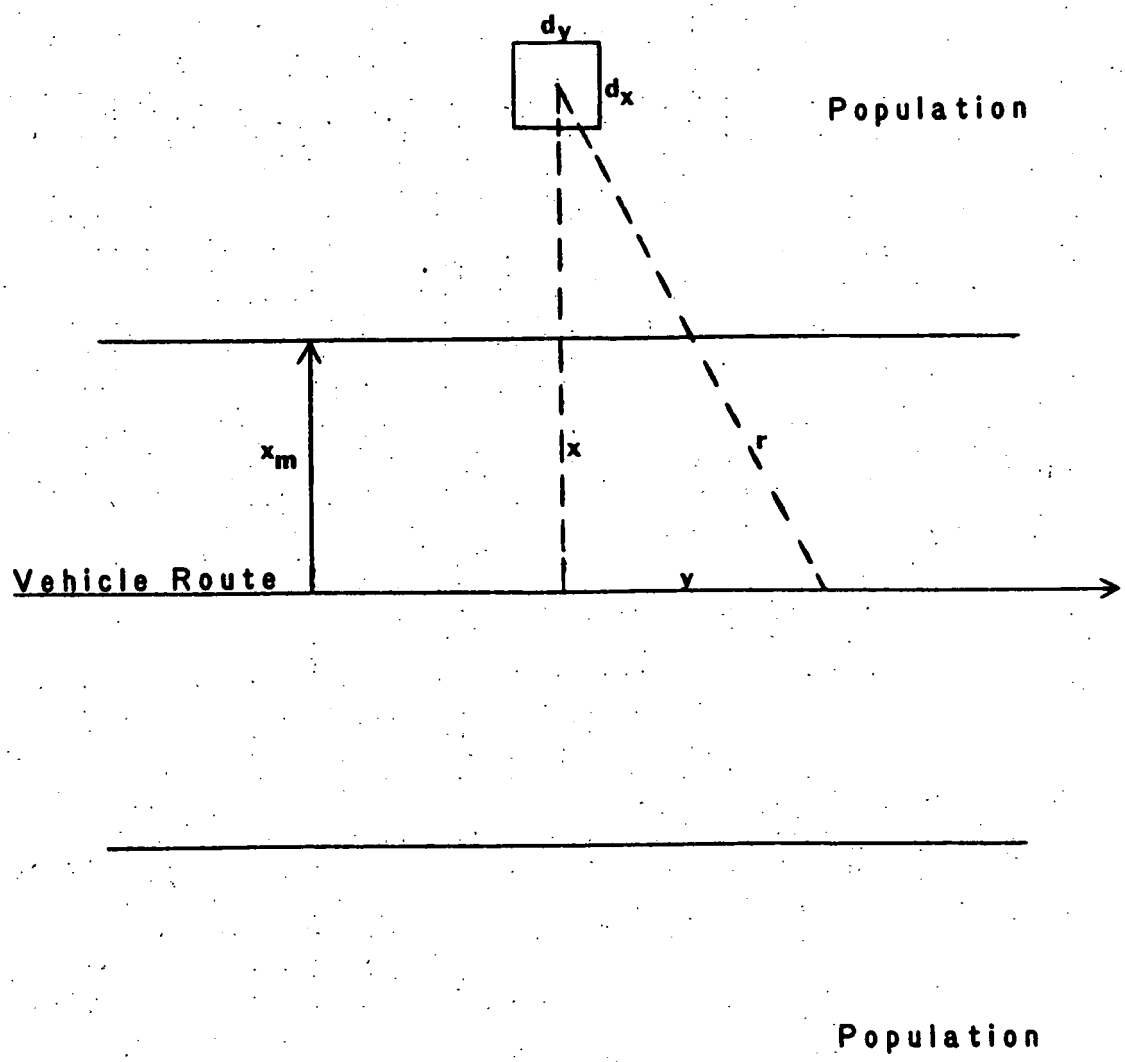

FIGURE 3.2 TRANSPORTATION GEOMETRY

000062

TABLE 3-3 . Values of TDOZ with Distance x_m

x_m	TDOZ
10 ft	1.0264E-4
20 ft	8.1945E-5
30 ft	7.0625E-5
40 ft	6.2816E-5
100 ft	3.9225E-5

$$D = (PLK/V)\ TDOZ \tag{3-23}$$

Except for K, all of the variables in equation 3-23 are functions of the disposal method or the disposal site environment. For example, the minimum exposure distance, x_m, is assumed to be 30 ft for shipments to the northeast and southeast sites, and 100 ft for shipments to the southwest site. This results in TDOZ values equal to 7.06E-5 and 3.92E-5 $(mi/ft)^2$, respectively. As discussed extensively in Appendix C, the population density, P, is assumed to be 2280 people/$mile^2$ for the northeast site, 610 people/$mile^2$ for the southeast site, and 60 people/$mile^2$ for the southwest site. The length of segment, L, is assumed to be 10 miles for municipal landfill shipments, and 100 miles for hazardous waste facility shipments. The speed of travel, V, is assumed to be 20 miles per hour for municipal waste facility shipments, and 35 miles per hour for hazardous waste facility shipments.

The remaining factor, K, is the equivalent radiation exposure rate in the center of the vehicle if all the waste radionuclides were concentrated on that one point. The way this factor is handled is through the previous equation for the dose rate to individuals at 1 m, i.e., equation 3-12:

$$D_W(x) = C_W\ (p_d/p_W)\ f_c\ PDCF\text{-}5 \tag{3-12}$$

with

$$f_c = PK\ CF\ DF\ EDF \tag{3-13}$$

The factor CF, the exposure correction factor for the side of the vehicle is equal to 0.341, DF and EDF are unity, and as usual, the factor PK is unity if the waste is not packaged, and (1/0.75) if the waste is packaged. The dose rate given by this equation is in units of mrem/year and can be converted to mrem/hour. Furthermore, this value must be extrapolated to the origin by assuming that it occurs 10 ft (the standard extrapolating distance for transportation calculations given in Reference 9) from the center of the vehicle. This yields an equivalent point source which can

be used with the equations developed above for the population exposures. Thus, the equation giving the value of K is as follows:

$$K = 100\ D_W(1m)/8760 \qquad (3\text{-}24)$$

where 100 is the value (square of 10 ft) used to convert the dose rate to the assumed point source at the center of the vehicle, and 8760 is the value used to convert dose rate per year to dose rate per hour.

Total population exposures are given by the following:

$$P = D\ (M_{tot}/5\ \text{tons/trip}) \qquad (3\text{-}25)$$

where M_{tot} is the total weight of the de minimis waste shipped in tons per year. This equation is also modified by the packaging index; if the waste is packaged, then 5 tons/trip is multiplied by 0.75. The effects of the distribution indices IX1 and IX2 are also accounted for as discussed in Section 3.2.

000064

CHAPTER 3.0 REFERENCES

(1) Rockwell III, T., (ed), U.S. Atomic Energy Commission, Division of Reactor Development, "Reactor Shielding Design Manual," TID-7004, March 1956.

(2) Abramowitz, M., and I. A. Stegun, Handbook of Mathematical Functions with Formulas, Graphs, and Mathematical Tables, National Bureau of Standards, Applied Mathematics Series-55, December 1965.

(3) Glasstone S., and A. Sesonske, "Nuclear Reactor Engineering," Van Nostrand Reinhold Company, 1967.

(4) Oztunali, O. I., et.al., "Data Base for Radioactive Waste Management, Volume 3, Impacts Analyses Methodology Report," USNRC Report NUREG/CR-1759, November 1981.

(5) Dames & Moore, "Study of Shipment of Spent Fuel From the Shoreham Nuclear Power Station to the Reprocessing Plant," June 1975.

(6) Bond, R.G., C.P. Straub, R. Prober, (eds.), Handbook of Environmental Control, Volume II: Solid Waste, Chemical Rubber Company (CRC) Press, 1973.

(7) Taylor, J. M., and S. L. Daniel, "RADTRAN: A Computer Code to Analyze Transportation of Radioactive Material," Sandia National Laboratories, SAND76-0243, April 1977.

(8) U.S. Nuclear Regulatory Commission, "Final Environmental Statement on the Transportation of Radioactive Material by Air and Other Modes," USNRC Report NUREG-0170, January 1977.

(9) U.S. Atomic Energy Commission, Directorate of Regulatory Standards, "Environmental Survey of Transportation of Radioactive Materials To and From Nuclear Power Plants," WASH-1238, December 1972.

4.0 WASTE PROCESSING OPERATIONAL IMPACTS

This chapter presents background, assumptions, and calculational procedures for estimating radiological impacts from processing operations involving de minimis waste. Three basic processing operations are characterized: incineration of de minimis waste in a small pathological incinerator operated by a waste generator, incineration of de minimis waste in a large municipal solid waste incinerator, and incineration of de minimis waste in a large hazardous waste incinerator. A variation is considered for the municipal incinerator in which the input waste is put through a pretreatment process to size-reduce the waste, sort combustible from non-combustible fractions, and possibly recycle metal and glass from the non-combustible fraction. This is referred to as the "sorting" variation.

Section 4.1 presents an overview of the calculational procedures including exposure equations, their simplification, and various meteorological assumptions. Following this section, a generator incinerator, a municipal waste incinerator with a sorting variation, and a hazardous waste incinerator are considered in Sections 4.2, 4.3, and 4.4, respectively.

4.1 Overview

In this report, both on-site and off-site individual and population exposures resulting from waste processing are calculated. For all three incinerators, off-site individual exposures consist of exposures to a person located in the centerline of the contaminated plume emitted by the incinerator stack. Off-site population exposures are calculated as exposures to the surrounding population out to a 50 mile radius from the incinerator.

In addition, for the municipal and hazardous waste incinerators, on-site personnel individual impacts include exposures to the incinerator worker at highest radiological risk resulting from airborne particulates as well as direct gamma radiation. Furthermore, exposures to all municipal and hazardous waste personnel are calculated because personnel at these facilities would not be considered radiation workers while personnel at the generator incinerator would be so considered.

The following sections present an overview of the exposure calculations applicable to off-site individuals, off-site populations, on-site individuals from airborne particulates, and on-site individuals from direct gamma radiation. A fifth section is included which discusses the dispersion factor calculations used in the methodology.

4.1.1 Off-site Individual Exposures

The radiological dose rate (in mrem/yr) to an individual located in the centerline of the incinerator plume is given by (Ref. 1):

$$H = \sum_n Q_n [f_o\ f_d\ f_w\ f_s]_{air}\ PDCF\text{-}3 \qquad (4\text{-}1)$$

where

H = individual dose rate in mrem/year
Q_n = total quantity of a given radionuclide n in the waste input to the incinerator over a given year (Ci/year)
f_o = time delay factor
f_d = site design factor
f_w = waste form and package factor
f_s = site selection factor

where PDCF-3 is the pathway dose conversion factor no. 3 for the radionuclide and solubility class of concern. Q_n is also equal to the de minimis waste concentration (Ci/m^3) times the de minimis waste incineration rate (m^3/year). The total dose rate is obtained by summing over all radionuclides of concern, where (n) stands for the radionuclide.

The time delay factor (f_o) is equal to exp ($-\lambda T$), where λ is the decay constant of the radionuclide of concern and T is the period between the time that the waste is generated and the time that the waste is incinerated. Since there is no real reason to consider the effect of any storage time, T is assumed for this case to be equal to zero and so (f_o) for this case is equal to unity.

The site design factor (f_d) accounts for the attributes of the site design that impede release of radionuclides, while the waste form and package factor (f_w) accounts for the attributes of the waste form and package factor to impede release of radionuclides. For this scenario, the two factors are combined and are given by the radionuclide release fraction (f_r - dimensionless).

The site selection factor (f_s) affects the transport of airborne radionuclides from their release point at the facility stack to the location of the receptor. Also incorporated into this factor are the assumed actions, if any, of the individual receiving the exposures which would tend to reduce the exposures. For this scenario, f_s is given as:

$$f_s = (X/Q)\ EDF \qquad (4\text{-}2)$$

where:

(X/Q) = atmospheric dispersion factor; and
EDF = exposure duration factor (dimensionless), which is the fraction of the year that the individual is assumed to be located in the plume of released activity.

The factor (X/Q) is treated in detail in Section 4.1.5. The factor EDF, given the generic nature of this study, is determined in a very conservative manner. That is, the wind is assumed to travel in one direction

000067

one-third of the time (Refs. 2, 3), and the maximum individual is assumed to be always located in the centerline of the plume. Equation (4-1) therefore reduces for this scenario to the following:

$$H = \sum_n Q_n \, f_r \, f_s \, PDCF\text{-}3 \qquad (4\text{-}3)$$

4.1.2 Off-site Population Exposures

Off-site population exposures, P, are calculated in units of person-mrem per year as follows:

$$P = \sum_n Q_n \, f_r \, POP \, PDCF\text{-}3 \qquad (4\text{-}4)$$

where Q_n, f_r, and PDCF-3 have the same meanings as the above calculations for the individual exposures, and where f_s in equation (4-3) has been replaced by POP, defined to be the population weighted sum of (X/Q) as a function of radial distance from the source (in units of person-year/m^3). The calculation of POP is described in Section 4.1.5.

4.1.3 On-site Individual Impacts from Airborne Particulates

On-site worker exposures from airborne particulates apply to the municipal and hazardous waste incinerators and are calculated as follows:

$$H = \sum_n C_n \left[f_o \, f_d \, f_w \, f_s\right]_{air} PDCF\text{-}1 \qquad (4\text{-}5)$$

where:

- H = individual dose rate in mrem/yr,
- C_n = concentration of a given radionucide (n) in the waste input to the incinerator over a given year (Ci/m^3)
- f_o = time delay factor
- f_d = site design factor
- f_w = waste form and package factor
- f_s = site selection factor

and where PDCF-1 is the pathway dose conversion factor no. 1 for the radionuclide and solubility class of concern. The radionuclide concentration in the waste, C_n, is given as the concentration as measured over the total volume of waste incinerated per year. It may be calculated as the average radionuclide concentration in the input de minimis waste times the ratio of the de minimis waste volume to the total volume of waste annually delivered to the incinerator. Alternatively, it may be expressed as follows:

000068

$$C_n = Q_n/V_{inc} \quad (4\text{-}6)$$

where Q_n is the total activity of radionuclide n in the de minimis waste stream in Ci/year, and V_{inc} is the total annual volume of waste incinerated in m^3/year.

The time delay factor, f_o, is given by exp($-\lambda T$), as in the case of Section 4.1.1. Again, T is assumed to be equal to zero, so f_o for this scenario is equal to unity. The site design factor accounts for the attributes of the incinerator design and operation that influence release of radionuclides into the air. It is also assumed to be unity, and the effects of radionuclide dispersion are incorporated into the site selection factor.

The waste form and packaging factor, f_w, is taken to be $10^{(ID-3)}$ for most of the operating personnel, and is taken to be unity for those personnel in close proximity with incinerator residue and ash. The site selection factor is given as follows:

$$f_s = T_{wa}\ EDF \quad (4\text{-}7)$$

where T_{wa} is the waste-to-air transfer factor, and EDF is the exposure duration factor. T_{wa} is calculated by assuming that each person working at the incinerator works in an environment in which the air is at a particular dust loading. For example, a high average for the airborne dust loading for the interior of a house is about 0.05 mg of dust per m^3 of air while a high average for natural ambient conditions is about 0.1 mg/m^3 (Ref. 4). The assumed dust loading in which a person works is a function of their occupation. For example, persons who spend much of their time within an office (superintendent, assistant superintendent, office manager, secretary) would be subjected to a smaller airborne dust loading than persons working in proximity to the waste. The largest dust loadings would be assigned to persons which may be in contact with fine-grained materials (refuse handlers, maintenance/labor). Most of the dust would be non-radioactive, and the amount of radioactive material that is contained within the dust would be proportional to the fraction of waste input to the facility that is radioactive. A first estimate of the dust loadings for each assumed environment is as follows:

Dust environment	Dust loading (mg/m^3)
low	0.1
mod	0.2
high	0.4

More on this subject is discussed in individual sections covering specific exposure scenarios.

000069

Putting all the factors together, equation 4-5 reduces to the following:

$$H = \sum_n C_n f_w T_{wa} EDF PDCF\text{-}1 \quad (4\text{-}8)$$

4.1.4 On-site Individual Exposures from Direct Gamma Radiation

External exposures from gamma radiation also apply only to the hazardous and municipal waste incinerators. These exposures are a function of several variables, including the source strength, the geometry of the source, and the geometrical relationship of the exposed individual to the source. It is apparent that as waste is input to the facility, processed, and trucked away as a residue, all of the above variables will change in a number of very complex ways. Given the lack of site-specific information, several simplifying assumptions must be made. This involves modeling the radiation source as a planar source of infinite thickness, and estimating a workers's proximity to the source. Personnel exposures are given in the usual way by the following:

$$H = \sum_n C_n [f_o f_d f_w f_s]_{DG} PDFC\text{-}5 \quad (4\text{-}9)$$

where all the symbols have been explained before. As before, f_o and f_d are assumed to be unity. The product $f_w f_s$ is given by the following:

$$f_w f_s = (p_d/p_w) f_a DF CF EDF \quad (4\text{-}10)$$

where

p_d = density of dirt (1.6 g/cm^3)
p_w = density of the waste (g/cm^3)
f_a = accessibility multiplier (dimensionless)
DF = distance factor (dimensionless)
CF = correction factor (dimensionless)
EDF = exposure duration factor (dimensionless)

Consequently, equation (4-9) reduces to the following:

$$H = \sum_n C_n (p_d/p_w) f_a DF CF EDF PDCF\text{-}5 \quad (4\text{-}11)$$

where all variables have been explained before. The value assumed for the waste density (p_w) may depend on the type of incinerator and the location of the waste within the incinerator.

In a manner similar to the airborne particulate exposures, the "proximity factor" is used to estimate the exposures to each person due to direct

gamma radiation. Each person is assumed to spend a significant amount of time at a particular distance from the waste, which is the source of the direct gamma radiation. Again, persons who spend most of their time within the facility offices are assumed to work at a greater distance from the waste than persons working directly with the waste. A first estimate of the distances assumed for each proximity factor is given below:

Proximity Factor	Distance (m)
close	1
mod	10
far	30

More on this subject is discussed in individual sections covering specific exposures.

4.1.5 Meteorological Diffusion

This section considers two of the atmospheric dispersion factors considered above: (X/Q) in the individual exposure calculations, and POP in the population exposure calculations. These two factors are outlined below.

(X/Q) Factor

Airborne transport and dilution of aerosols, vapors, or gases released into the atmosphere are functions of (1) the atmospheric conditions along the plume path, (2) the topography of the surrounding area, and (3) the particular characteristics of the effluents. For a point-source release such as through a stack, the radionuclide concentration in the surrounding area depends upon the amount of effluent released; the height of the release; the momentum and buoyancy of the emitted plume; the wind speed, atmospheric stability, and air flow patterns of the site; and various effluent removal mechanisms. Geographic features such as hills, valleys, and large bodies of water will influence the dispersion and air flow patterns, while surface roughness, including vegetative cover, affects the degree of turbulent mixing. Locations with similar topographical and climatological features can have similar dispersion and air flow patterns but detailed dispersion patterns are usually unique for each site.

Models to estimate airborne transport can be made as sophisticated as the available set of site-specific data allows. Given the mostly generic nature of this analysis, a somewhat simplified model is used which was used in Reference 5 and, as discussed in Reference 5, was originally derived from a number of sources. The atmospheric dispersion factor used in this report to determine ground level concentrations of radionuclide in air at a distance (r) downwind from a release point is given by:

$$(X/Q) = \exp[-(1/2)(h/\sigma_z)^2]\ n/[\pi\sqrt{2\pi}\ u\ r\ \sigma_z] \qquad (4\text{-}12)$$

000071

where:

- h = effective height (m) of release above ground surface
- σ_z = standard deviation of the plume concentration distribution in the vertical direction (m)
- n = number of sectors (16)
- u = mean wind speed in the sector at the point of release (m/sec)
- r = distance from source point (m)

The above equation is used to calculate releases as a Gaussian plume along a 22.5-degree sector radiating from the release point. In practice, the procedure is to solve the equation for each of the 16 sectors, taking into account the particular atmospheric conditions associated with each sector that influence σ_z, and multiplying the result by the fraction of a year that the wind blows in each sector direction. Caution is recommended when using the above equation for distances $r<100$ meters. Equation (4-12) thus reduces to the following:

$$(X/Q) = 2.032 \exp[-(1/2)(h/\sigma_z)^2] / [u\ r\ \sigma_z] \qquad (4\text{-}13)$$

The vertical standard deviation of the plume (σ_z) is given as a function of distance and stability class in many references. One form for this factor is (Ref. 6):

$$\sigma_z = (ar)\ (1 + br)^c \qquad (4\text{-}14)$$

where (r) is the distance from the release point, and a, b, and c are constants that depend upon the stability class. Six stability classes in order of increasing stability are characterized based on criterion stated by Pasquill. Values for the above constants for each of the 6 stability classes are given in Table 4-1 (Ref. 6).

TABLE 4-1 . Vertical Standard Deviation Constants - 1

Pasquill Stability Class	Constants a	b	c
A	0.2	0	0
B	0.12	0	0
C	0.08	0.0002	-0.5
D	0.06	0.0015	-0.5
E	0.03	0.0003	-1
F	0.016	0.0003	-1

Another form for this factor is (Ref. 7):

$$\sigma_z = ar^b + c \qquad (4\text{-}15)$$

Values for the above constants as a function of stability class and distance are given in Table 4-2 (Ref. 7).

TABLE 4-2 . Vertical Standard Deviation Constants - 2

Pasquill Stability Class						
A	B	C	D	E	F	for
Constant a						
0.192	0.156	0.116	0.079	0.063	0.053	r<100 meters
0.00066	0.0382	0.113	0.222	0.211	0.986	100<r<1000
0.00024	0.055	0.113	1.26	6.73	18.05	1000≤r
Constant b						
0.936	0.922	0.905	0.881	0.871	0.814	r<100
1.941	1.149	0.911	0.725	0.678	0.74	100<r<1000
2.094	1.098	0.911	0.516	0.305	0.18	100≤r
Constant c						
0	0	0	0	0	0	r<100
9.27	3.3	0	-1.7	-1.3	-0.35	100<r<1000
-9.6	2	0	-13	-34	-48	1000≤r

It is expected that most applications of the calculational methodology will be for generic rather than site specific studies, and so several assumptions must be made regarding environmental conditions, release height, and distance (r).

In this report, airborne releases are calculated for two general situations: releases resulting from operation of a disposal facility, and releases resulting from waste incineration. The former situation always involves ground level releases, while the latter situation requires assumptions to be made regarding the height of the incinerator stack. Given the uncertainties regarding the design of the on-site incinerator, ground level release is conservatively assumed for this case. For municipal and hazardous waste incineration, a stack height of 61 m (200 ft) is assumed, which is typical of existing large incinerators (see Appendix C).

000073

In equation 4-13, σ_z and u are functions of site environmental characteristics, and the user of the code may optionally use site-specific values for these and other parameters (e.g., stack height) if he so desires. (This may be particularly useful for on-site incineration and waste disposal.) Reference values are otherwise assumed in this report which result in a conservative estimate of individual impacts. These reference values are calculated from assumptions obtained from Regulatory Guide 1.3 and 1.4, which provide suggested stability classes and wind speeds for an accident involving airborne releases which continue for a period exceeding 24 hours. These assumed stability classes and windspeeds are 1/3 Stability Class C with wind speed 3 m/sec, 1/3 Stability Class D with wind speed 3 m/sec, and 1/3 Stability Class F with wind speed 2 m/sec. In addition, the wind is assumed to blow one-third of the time in the direction of the maximum exposed individual (Refs. 2, 3).

The (X/Q) values are additionally calculated for a distance (r) to the maximum exposed individual equal to 100 m for ground level releases and 300 m for elevated (61 m) releases. The 100 m distance for ground level release is assumed principally due to uncertainties regarding the efficacy of equation 4-13 at distances less than 100 m. The 300 m for elevated releases is assumed based upon Figure 2c of Reference 2, and results in maximum exposures for an off-site individual. Using equation 4-14, the reference (X/Q) and f_s values used in this report are given in Table 4-3 for ground level and elevated releases. An exposure duration factor of (1/3) has been assumed.

TABLE 4-3 . Reference Atmospheric Dispersion Values (yr/m^3)

Type of Release	(X/Q)	f_s
Ground level	9.1×10^{-11}	3.03×10^{-11}
Elevated	1.6×10^{-13}	5.29×10^{-14}

POP Factor

The POP factor is used to calculate impacts to the population surrounding (out to a 50-mile radius) a site releasing radionuclides into the air, and is given in units of person-year/m^3. It is calculated using equations 4-13 and 4-14 assuming a ground level release. A ground level release is always assumed since the effects of the release height are generally not significant further than about a kilometer from the release point. The topography of the local area is generally more significant.

To calculate POP, a population distribution is first established which provides the total population contained within a series of concentric rings around the release point. Then, a (X/Q) value is calculated for the midpoint of each ring. This (X/Q) value is then multiplied by the population within each ring, and the resulting products summed.

The user of the code has the option of providing the fraction of a year that the site is in a given stability class, the average wind speed within the stability class, and the population distribution for the specific site. Alternatively, the population distribution may be one of the generic rural environment distributions presented in Table 4-4 for each reference site. For urban environments, the population distributions are multiplied by 10.

TABLE 4-4 . Population Distribution for Reference Site Environments

Distance From Source	North East	South East	South West
0-5 miles	3,440	2,024	59
5-10 miles	20,513	8,115	180
10-20 miles	73,636	36,000	3,529
20-30 miles	121,559	124,995	9,062
30-40 miles	556,639	203,435	4,888
40-50 miles	1,012,788	104,933	27,158

As a specific example, generic stability classes are assumed for site conditions consisting of 1/3 Stability Class C with wind speed 3 m/sec, 1/3 Stability Class D with wind speed 3 m/sec, and 1/3 Stability Class F with wind speed 2 m/sec. Under these conditions, assuming ground level release, equations 4-13 and 4-14 reduce to the following:

$$(X/Q) = 4.168\times10^{-8}\ q(r)/r^2 \qquad (4\text{-}16)$$

where (X/Q) is in units of year/m^3, r is distance from the source point in meters, and q(r) is given by the following:

$$q(r) = .133(1+.0002r)^{1/2} + .178(1+.0015r)^{1/2} + 1 + .0003r \qquad (4\text{-}17)$$

Using the reference population distributions given in Table 4-4, and assuming rural environments, the POP values given in Table 4-5 are obtained for each of the 3 reference sites. If the user chooses not to exercise the option to provide site specific information (see section 2.2), the POP values in Table 4-5 are used.

000075

TABLE 4-5 . Reference Population Factors

Site Environment	POP(person-year/m^3)
Northeast	5.05×10^{-10}
Southeast	1.75×10^{-10}
Southwest	1.33×10^{-11}

4.2 Generator Impacts (Pathological Incinerator)

The reference on-site incinerator is assumed to be a small unit of the type commonly used by institutions, universities, research facilities, and hospitals to dispose of waste materials such as biological wastes, scintillation fluids and other organic liquids and trash. Small licensees such as institutions, universities, research facilities, or hospitals are probably the types of licensees who are most likely to incinerate de minimis waste on-site. The reference on-site incinerator is assumed to be very similar to the pathological incinerator outlined in Reference 8.

Pathological incinerators are often multiple chamber designs with a fixed refractory hearth. Typical designs operate at temperatures in the range of 900 to 1000°C, and are equipped with at least a partial off-gas treatment system, often including high efficiency particulate air (HEPA) filters, vapor condensors, or wet scrubbers. Typical process rates range from 100 to 500 lbs/hr. The incinerator can be used to volume reduce a wide range of waste types and forms, including biological wastes, organic liquids, aqueous liquids, or trash. Typical volume reduction factors (the ratio of the waste volume prior to incineration to the volume of the incinerated residue) are given below:

Waste Type	Volume Reduction Factor
Uncompacted Trash	20
Full Liquid Scintillation Vials	
Glass Vials	4
Polyethylene or Nylon Vials	>100
Scintillation Fluids and Organic Liquids	>100
Aqueous Liquids	>100
Biological Waste	15

In this work, the assumed mass reduction factor for the pathological incinerator is input by the user of the code (rather than the volume reduction factor). The equation governing off-site individual exposures is equation 4-3:

$$H = \sum_n Q_n f_r f_s \text{ PDCF-3} \quad (4\text{-}3)$$

where the symbols are as explained before. The radionuclide release fraction, f_r, which is defined as the fraction of the total quantity of a given radionuclide within the incinerated waste that is discharged by the incinerator, is the inverse of the overall incinerator decontamination factor for that radionuclide. The release fractions assumed for the reference pathological incinerator are discussed in Appendix C and are summarized as follows:

Nuclide	Release Fraction (f_r)
H-3	0.90
C-14	0.75
Cl-36	0.01
Tc-99	0.01
All Ruthenium	0.01
All Iodine	0.01
All others	0.0025

The site selection factor, f_s, was discussed in Section 4.1.5. The value applicable to on-site incineration is assumed to be the ground level release value of 3.03×10^{-11} year/m^3. Alternatively, the user of the code could substitute other values for f_r and f_s based upon consideration of a specific incineration facility.

As the contaminated plume arrives at the exposed individuals location, it results in the individual's immersion in a contaminated cloud (Ci/m^3). Resulting dose rates are calculated by multiplying by PDCF-3. This pathway dose conversion factor calculates resulting dose rates due to inhalation as well as immersion in a contaminated cloud.

Off-site population exposures are calculated in units of person-mrem/year as follows:

$$P = \sum_n Q_n f_r \text{ POP PDCF-3} \quad (4\text{-}4)$$

where Q_n, f_r, and PDCF-3 have the same meanings as the above calculations for individual exposures, and POP is discussed in Section 4.1.5.

4.3 Municipal Solid Waste Processing

The reference municipal solid waste incinerator is described in Appendix C. The reference incinerator is assumed to be a 500 ton/day refractory walled rectangular furnace which operates at that level for 280 days per

000077

year. The reference incinerator is typical of the size and design of municipal waste incinerators built in the last 20-30 years. Similar to most existing incinerators, little or no size reduction is performed on the input waste feed. In addition, there is assumed to be no separation of the non-combustible items from the waste feed (no "sorting") and no recovery of recyclable materials such as metal or glass. A sorting option consisting of size reduction, separation of non-combustible items, and/or recycle is considered as a module to the basic reference unit.

A refractory walled incinerator is an older design for which heat recovery is generally not performed except possibly inefficiently by placing a boiler within the furnace. Newer designs are typically "waterwall" incinerators which feature a series of parallel spaced metal tubes running along the inside furnace walls. Water is circulated through the tubes to recover the heat of combustion. The older refractory wall design is assumed for this study since (1) most existing municipal waste incinerators in the United States are refractory wall designs and therefore will probably still account for most waste incineration to the year 2000, and (2) larger airborne effluents would be expected from refractory walled designs than from waterwall designs.

Operating the unit, assuming no waste sorting or materials recovery, is assumed to result in a waste volume reduction by a factor of 6, which is typical of municipal incinerators. The residue from combustion is quenched after removal from the furnace and the wet residue is trucked to a landfill, which is assumed to be located within a few miles of the incinerator.

4.3.1 Off-site Exposures

The equations used to calculate airborne impacts to an off-site individual are very similar to those for the pathological incinerator. There are, however, a few variations corresponding to differences in incinerator design and operation -- specifically differences in the radionuclide release fractions (f_r) and in the site selection factor (f_s).

The release fractions assumed for the municipal incinerator are based upon data presented in Appendix C. The release fractions (f_r) assumed for the municipal incinerator are as follows:

Nuclide	Release Fraction (f_r)
H-3	0.90
C-14	0.75
Cl-36	0.01
Tc-99	0.01
All Ruthenium	0.01
All Iodine	0.01
All others	0.005

Airborne impacts to an off-site individual are given by:

$$H = \sum_n Q_n f_r f_s \text{ PDCF-3} \qquad (4\text{-}3)$$

where the symbols are as explained before, and where the site selection factor, f_s, is 5.29×10^{-14} yr/m^3 (see Table 4-3 - elevated release).

Similar to the pathological incinerator, the population impacts are calculated from equation (4-4):

$$P = \sum_n Q_n f_r \text{ POP PDCF-3} \qquad (4\text{-}4)$$

where P is in units of person-mrem/year, and the symbols are as explained before.

4.3.2 Impacts to Incinerator Personnel

Radiological impacts to municipal incinerator personnel are calculated in two forms: (1) individual impacts in (mrem/yr) to the incinerator worker at the highest radiological risk, and (2) total impacts (in person-mrem/yr) to all incinerator personnel.

It is obvious that municipal incinerators are very complex operations and to estimate exposures, a number of simplifying assumptions must be made. In this report, the approach is to (1) determine personnel requirements and occupations for several existing municipal incinerator operations, (2) project personnel requirements and occupations for the reference incinerator, and (3) project the likely radiological environment associated with each occupation. Based upon the analysis in Appendix C, Table 4-6 summarizes the projected personnel requirements and occupations for the reference 500 ton/day incinerator, along with the estimated worker radiological environments.

Other considerations include the facts that the incineration process will vary the volume of the waste handled as well as the tendency for the waste to disperse. That is, the incinerator residue volume will be reduced by about a factor of six as compared to the input waste volume. In addition, the residue has a high ash content and so will be in a more dispersible form than the input waste. This could have an effect on the impacts calculated depending upon whether a given site worker spends most of his time at either the "head end" of the facility, where waste is received (e.g., charging floor operators), or the "tail end" of the facility, where residue is removed (e.g., residue handlers). In this report, all personnel except for residue handlers and maintenance/labor are assumed to work at the head end of the facility. Residue handlers are assumed to work at the tail end while maintenance/labor personnel are assumed to spend half their time at the head end and half their time at the tail end.

000079

TABLE 4-6 . Assumed Worker Requirements for Municipal Incinerator Facility

Occupations	No. of Persons	Dust Environment	Proximity Factor
Superintendent	1	low	mod
Assistant Superintendent	1	low	mod
Office Manager	1	low	far
Secretary	1	low	far
Scalemaster	2	mod	mod
Crane Operator	2	mod	mod
Charging Floor Operators	6	mod	close
Process Controllers	4	mod	mod
Residue Handlers	4	high	close
Maintenance/Labor	8	high	close

The above are considered to be reasonable assumptions considering the scope of this report. An alternative way to approach the problem could be to perform a detailed evaluation of an existing incinerator, measuring dust loadings at various locations and performing an extensive personnel time and motion study. But this would be very difficult, very expensive, and very time consuming, even if such an operation were within the scope of this study. In any case, it could be argued that it would probably not result in a significant difference in the calculations, except to reveal obvious areas of over conservatism.

The approach is to first calculate impacts to each individual worker, where the impacts to each worker is calculated as the sum of radiological exposures due to airborne contamination as well as direct gamma radiation. Then, the worker having the largest radiological dose rate is determined and this dose rate is stored. Finally, the total dose rate is determined by summing individual dose rates over all workers.

Exposures to incinerator personnel resulting from airborne particulates are calculated using equation (4-8):

$$H = \sum_{n} C_n \, f_w \, T_{wa} \, EDF \, PDCF\text{-}1 \qquad (4\text{-}8)$$

The expression (f_w T_{wa}) is used to relate the radionuclide concentration within the input waste to the radionuclide concentration in air at various locations in the incinerator facility. The waste-to-air transfer factor (T_{wa}) is determined assuming that the waste is in a very dispersible form such as a fine silt, a powder, or an ash. The factor (f_w) accounts for the attributes of the waste form that would resist such dispersion. This relationship is complicated by the fact that the waste form, and corresponding tendency to disperse into the air, changes from the time the waste

arrives to the time that it is transported away as a residue. The dust environment at an incinerator will also vary depending upon the design of the facility and the various operational measures taken at the facility to suppress dispersion. For example, while incinerated residue would be expected to be generated in a very dispersible form, operational procedures almost always include quenching with water. This is done to facilitate handling but it also suppresses dispersion. It is also difficult to assess the definite origin of a given dust particle in a given location, given variations in air ventilation systems.

In this scenario, T_{wa} is assumed to be given by the ratio of the airborne dust loading to the density of the waste input to the incinerator. The assumed dust loadings for various personnel have been given above. The waste density is assumed to be 0.27 g/cm^3 (500 lb/yd^3), which is typical of municipal waste when stored in incinerator storage pits prior to combustion.

Using this relationship for T_{wa} (dust loading/waste density) implies that T_{wa} should vary depending upon the location of the waste in the incinerator. Based upon experience, the density of the incinerator residue is estimated at about 0.89 g/cm^3 (1500 tons/yd^3) in this report, which is about three times larger than the input waste density. This could imply that T_{wa} for residue should be correspondingly reduced by a factor of three over T_{wa} calculated for the input waste. This would not mean that the impacts from airborne dispersion of radionuclides would be reduced by a factor of three, however, since the volume reduction factor of the incinerator is assumed to be six. This means that the radionuclide concentration in the residue would be correspondingly increased. The overall effect of the two conflicting tendencies on the calculations is about a factor of two, which is not believed to be significant. Given this, and to reduce calculational complexity, airborne impacts are calculated given a fixed waste concentration and a fixed waste density. This results in T_{wa} factors for each of the facility personnel as listed below.

TABLE 4-7 . Waste-to-air Transfer Factors

Dust Environment	Transfer Factor
low	3.70×10^{-10}
mod	7.41×10^{-10}
high	1.48×10^{-9}

The assumed value of the waste form and package factor (f_w) for residue handlers is always unity. This is to account for the greater dispersability of the residue as compared with the input waste. Other personnel, except maintenance/labor personnel, are assumed to have an (f_w) factor equal to $10^{(ID-3)}$. Since maintenance/labor personnel are equally likely

000081

to spend time at all parts of the facility, an average f_w factor is assumed.

The exposure duration factor (EDF) accounts for the fraction of a year that the worker works at the facility. This factor is assumed to be equal to 2080/8760 = 0.237.

Personnel exposures due to external radiation are given by the following:

$$H = \sum_n C_n (p_d/p_w) f_a \text{ CF DF EDF PDCF-5} \quad (4\text{-}11)$$

Note that the waste density as used in this scenario refers to the density as averaged over all the waste processed through the incinerator, not just the de minimis waste. The density of the de minimis waste is a variable, and the effective waste density at the incinerator could be potentially calculated as follows:

$$p_w = [p_n M_n + p_{dm} M_{dm}]/M_{tot} \quad (4\text{-}18)$$

where:

p_n = density of non-radioactive waste delivered to the incinerator
M_n = mass of non-radioactive waste delivered to the incinerator
p_{dm} = density of de minimis waste
M_{dm} = mass of de minimis waste
M_{tot} = total annual waste mass

This is not likely to be a productive enterprise, however. Consider that a 500 ton/day incinerator operating for 280 days/yr will incinerate 140,000 tons of waste per year, or 2.8 million tons over 20 years of operations. The density of the waste will vary, but assuming a typical waste density of 0.27 gm/cm^3 as input to the incinerator and stored prior to combustion, this corresponds to a total waste volume processed of 9.4 million m^3 over 20 years. Based upon data obtained from references 5 and 9, this waste volume is on the order of 3 to 4 times the total volume of all low-level radioactive waste projected to be generated over a 20 year time period from 1980 to 2000 (Ref. 9). This means that the presence of even large quantities of de minimis waste input to the incinerator will have an insignificant effect on parameter values such as waste densities within the incinerator.

It may be also noted that the density of the waste will change as it is processed. As noted above, the residue density will be on the order of three times that of the input waste. The waste concentration in the residue will also be six times as great, however, so the effects do not impact the calculations by more than a factor of two. Thus, a typical waste density as input to the incinerator and stored prior to combustion of 0.27 g/cm^3 is assumed.

The factors CF and DF have been discussed in Chapter 3.0. They are the correction factor for the finite lateral extent of the source, and distance factor, respectively. Due to a lack of site specific information, CF is assumed to be equal to unity for this scenario. The factors DF, calculated using equation 3-11, for the proximity factors assumed are given in Table 4-8.

TABLE 4-8 . Distance Factors for Incinerators

Proximity Factor	Distance	DF
far	30 m	.6497
mod	10 m	.8311
close	1 m	1.0

The accessibility multiplier, f_a, is used to account for the self shielding properties of activated metals. In this report, f_a is equal to 0.1 for IA = 2. The exposure duration factor, EDF, is the same as that given previously, or 0.237.

4.3.3 Waste Sorting Exposures

To the above reference municipal incinerator may be added three options involving pretreatment of the waste prior to combustion. All options involve first sending the input waste through a size reduction process involving a hammermill shredder. Following this, the user of the code may specify the following options for further waste processing:

1. The size-reduced waste is incinerated and the combustion residue is sent to landfill disposal.

2. The size-reduced waste is sent through an air classifier to separate the light combustible fraction from the heavy non-combustible fraction. The combustible fraction is then incinerated, while the remaining non-combustible fraction -- consisting of metal, glass, and other material -- is sent to landfill disposal.

3. The size-reduced waste is sent through an air classifier and the separated combustible fraction is incinerated. The non-combustible metal/glass fraction is separated from the other non-combustible material and is sold as scrap for recycle. The remaining non-combustible material (the "other" fraction) is sent to landfill disposal.

Size reduction of municipal waste prior to incineration helps to improve combustion efficiency, and thus reduce airborne effluents. Since many existing municipal incinerators are having difficulties meeting current air standards, such size-reduction operations may eventually become fairly common at operating incinerators.

000083

The second and third options assume a separations process to remove non-combustible items from the waste feed. The separations operation would be expected to further improve combustion efficiency. The second option corresponds to a situation in which there is no local market for recovered recyclable material (metal and glass), or the separation process may not obtain recyclable materials of sufficient quality. This is actually probably a more likely situation than the third option, which assumes a more complete resource recovery operation.

A detailed summary of the daily material flow for the reference 500 ton/day incinerator and the three optional sorting modules is presented as Table 4-9. The compositions of the input waste, residue, any recycled material, and any discarded material are given in tons, along with appropriate densities and volumes. For Options 2 and 3, the input waste is assumed to be separated into combustible and non-combustible fractions, and for this report, the combustible fraction is assumed to contain 95% of the combustible waste, 5% of the metal, 5% of the glass, and 10% of the other material. For Option 3, the overall efficiency of recovery is assumed to be 85% of the glass from the entire input waste feed and 90% of the metal. Based on this, the assumed distribution of individual input waste components are given in Table 4-10.

Off-site Exposures

Impacts to off-site individuals and populations are given in a similar manner as presented in Section 4.3.1 for the reference municipal incinerator, i.e., equations (4-3) and (4-4):

$$H = \sum_n Q_n' \, f_r \, f_s \, \text{PDCF-3} \tag{4-3}$$

$$P = \sum_n Q_n' \, f_r \, \text{POP} \, \text{PDCF-3} \tag{4-4}$$

The only difference is that for Options 2 and 3, Q_n is replaced by Q_n' to reflect the material excluded from incineration by the separations process. This assumption is conservative in that it ignores the improved combustion efficiency, and corresponding reduced airborne effluents, that would result from the size-reduction process. Q_n' is given as follows:

$$Q_n' = Q_n \, \text{MUL} \tag{4-19}$$

where

$$\text{MUL} = 0.95 \, IC_c + 0.05 \, IC_m + 0.05 \, IC_g + 0.10 \, IC_o \tag{4-20}$$

The IC factors are obtained from the waste composition index discussed in Section 2.2.1; IC_c, IC_m, IC_g, and IC_o stand for the fractions of de

TABLE 4-9 . Daily Material Flow for the Reference 500 tons/day Municipal Incinerator Facility and Sorting Options

Waste Component	Base	Sorting Option 1 (size-red)	Sorting Option 2 (separations)	Sorting Option 3 (Recycle)
Input(tons/day)				
Combustibles	315(63%)	315(63%)	315(63%)	315(63%)
Glass	40(8%)	40(8%)	40(8%)	40(8%)
Metal	45(9%)	45(9%)	45(9%)	45(9%)
Other	100(20%)	100(20%)	100(20%)	100(20%)
Total	500	500	500	500
Density(#/cy)	500	500	500	500
Volume(cy)	2000	2000	2000	2000
Residue(tons/day)				
Water	125(50%)	125(50%)	26.6(50%)	26.6(50%)
Glass	39(16%)	39(16%)	2.0(4%)	2.0(4%)
Metal	44(18%)	44(18%)	2.2(4%)	2.2(4%)
Ash&Misc.	42(17%)	42(17%)	30.8(42%)	30.8(42%)
Total	250	250	53.2	53.2
Density(#/cy)	1500	1500	1500	1500
Volume(cy)	333	333	71	71
Recovered Material(tons/day)				
Glass				34
Density(#/cy)				980
Volume(cy)				69
Metal				40.5
Density(#/cy)				750
Volume(cy)				110
Discarded Material(tons/day)				
Combustibles			15.8(8%)	15.8(14%)
Glass			42.7(20%)	4.0(4%)
Metal			38.0(23%)	2.2(2%)
Other			90.0(48%)	90.0(80%)
Total			186.5	112
Density(#/cy)			1040	1410
Volume(cy)			360	160

000085

TABLE 4-10 . Distribution of Waste Components As a Function of Options

Percent Distribution	Base	Sorting Option 1 (size-red)	Sorting Option 2 (separation)	Sorting Option 3 (recycle)
To Incineration				
Combustibles	100	100	95	95
Glass	100	100	5	5
Metal	100	100	5	5
Other	100	100	10	10
To Recovery				
Combustibles	0	0	0	0
Glass	0	0	0	85
Metal	0	0	0	90
Other	0	0	0	0
Discarded Material				
Combustibles	0	0	5	5
Glass	0	0	95	10
Metal	0	0	95	5
Other	0	0	90	90

minimis waste stream that are combustible, metal, glass, and other material, respectively. The multipliers are obtained from Table 4-10.

On-site Exposures

Personnel exposures to on-site workers are calculated in a similar manner as in Section 4.3.2 for the reference municipal incinerator. The size reduction, separations, and recovery processes, however, are conservatively assumed to require additional personnel. The additional workers assumed to be required for these options are presented in Table 4-11. The values for the dust environment and proximity factor are the same as those assumed previously.

TABLE 4-11 . Assumed Worker Requirements for Waste Sorting Options

Occupation	No. of Persons	Dust Environment	Proximity Factor
First Option			
Hammermill Operator	1	mod	mod
Storage Bin Attendant	1	mod	mod
General Labor	1	mod	close
Second Option			
Hammermill Operator	1	mod	mod
Air Class. Operator	1	mod	mod
Materials Handlers	1	high	close
Storage Bin Attendant	1	mod	mod
General Labor	1	mod	close
Third Option			
Hammermill Operator	1	mod	mod
Air Classifier Operator	1	mod	mod
Storage Bin Attendant	1	mod	mod
Ferrous Metal Recovery	1	mod	mod
Heavy Media Sep. Op.	1	low	mod
Glass Sep. Op.	1	low	mod
Materials Handlers	2	high	close
General Labor	2	mod	close

000087

4.4 Hazardous Waste Processing

The reference hazardous waste incinerator is described in Section C.4 of Appendix C. Briefly, the reference incinerator is assumed to be a rotary kiln having a maximum waste capacity of 100 tons per day and operating at this capacity at an average utilization rate of 75%. The reference rotary kiln incinerator is designed to accept a wide variety of waste forms, including liquids, solids in bulk quantities, and solids delivered in drums and other packages.

Waste delivered to the reference facility is generally temporarily stored prior to combustion, with different waste types segregated from one another. This is done for safety and also to control the composition of material fed to the incinerator. An assessment is made regarding incoming wastes as to the type of contained material, the flammability, hazard potential, and other characteristics pertinent to incinerator performance and operational safety. Waste is accepted in a solid, liquid, or semi-solid (sludge) form. In addition, waste may be accepted in a packaged form (e.g., as 55-gallon metal or fiber drums) or in a bulk form (e.g., as a liquid delivered in a tanker vehicle).

The mechanism of charging waste to the incinerator, as well as the rate at which the waste is charged, varies depending upon the nature of the waste. Bulk liquid waste is fed to the incinerator by means of a variety of possible nozzles and atomizers. Watery wastes are generally atomized into the combustion chamber, while flammable wastes are often fed through burner nozzles to aid in combustion and reduce the need for auxiliary fuel. Bulk solid waste such as contaminated trash is fed to a conveyor which conveys the waste to a charging hopper located above the furnace. Drummed waste may be either emptied onto the conveyor, fed into the burner without being emptied, or sent through a shredder prior to feeding the burner. In the last option, a mix of waste and waste package is fed into the burner, and this option is frequently used for waste delivered in fiber or other easily shredded packages. The first option can be used as a means of reusing waste packages. The second option--that of sending drummed waste directly into the burner--is used infrequently and is generally limited to waste considered the most hazardous. This of course reduces the need for waste handling.

The kiln has dimensions on the order of 10 feet in diameter and 30 feet long and spins at a rate of about a quarter of a revolution per minute. A typical operating temperature is about 815-870°C (1500-1600°F), and solid waste material is typically retained within the kiln on the order of a few hours. The retention time, however, can vary significantly depending upon the type of waste and mode of incineration operation. A residue discharge port is located at the lower end of the slanted kiln. This residue consists of ash, glass, metal and other materials, such as waste drums; the collected residue is quenched with water and loaded into trucks for transport to an outside landfill for disposal.

Combustion gases are retained in the kiln combustion area an average of 2 seconds, and after passing out of the kiln flow through a mixing chamber to a secondary combustion chamber. The secondary combustion chamber burns uncombusted gases and particulates from the kiln, and can be fired either by auxiliary fuel or combustible liquid waste. The secondary combustion chamber operates at a temperature range of about 980 to 1090°C (1800-2000°F). Gases from the secondary combustion chamber are quenched and sent through scrubbers and a demister prior to discharge through the plant stack which is assumed to have a 61 m (200 ft) height. Waste liquids from the scrubber, demister, and ash handling system are generally acidic, and are neutralized prior to discharge to settling ponds where the liquids may be treated further if necessary. Any fly ash or other solid material collected from the effluent treatment system is combined with incinerator residue and disposed.

4.4.1 Off-site Incinerator Releases

Similar to the municipal waste incinerator, the general equations used to calculate airborne impacts to an off-site individual and population are as follows:

$$H = \sum_n Q_n \, f_r \, f_s \, PDCF\text{-}3 \qquad (4\text{-}3)$$

$$P = \sum_n Q_n \, f_r \, POP \, PDCF\text{-}3 \qquad (4\text{-}4)$$

where H is in units of mrem/yr, P is in units of person-mrem/yr, and other factors in the equations have been defined previously. Some explanation, however, regarding the values assigned to specific factors such as f_r is required.

Airborne particulate effluents for the reference hazardous waste incinerator are assumed to be somewhat reduced in comparison to the reference municipal waste incinerator. This is due to the greater regulatory control placed over hazardous waste incinerator operations in general as well as the greater degree of public concern. The assumed release factors for the reference hazardous waste incinerator are as follows:

Nuclide	Release Fraction (f_r)
H-3	0.90
C-14	0.75
Cl-36	0.01
Tc-99	0.01
All Ruthenium	0.01
All Iodine	0.01
All others	0.0025

An elevated release is assumed for the hazardous waste incinerator. Thus, the site selection factor, f_s, is 5.29×10^{-14} year/m^3 (see Table 4-3).

000089

4.4.2 Impacts to Incinerator Personnel

Radiological impacts to hazardous waste incinerator personnel are calculated in two forms: (1) individual impacts (in mrem/yr) to the incinerator worker at the highest radiological risk, and (2) impacts to all incinerator personnel (in person-mrem/yr). Similar to the municipal incinerator, the approach is to first project personnel requirements and occupations for the reference hazardous waste incinerator and then to project the likely radiological environment associated with each occupation.

Although operation of a hazardous waste incinerator is somewhat similar to a municipal solid waste incinerator, there are a number of important differences. Unlike at a municipal solid waste incinerator, the waste handled is by definition hazardous and so more attention must be paid to safety during waste receipt and handling. Since a more heterogeneous waste mixture is received at the hazardous waste incinerator, more personnel time would be needed (per ton of waste processed) to regulate flow through the incinerator facility. Since operations would be conducted on a contract basis, administrative requirements would also be augmented. Compliance with EPA requirements would also require administrative personnel time.

Assuming that it requires twice the personnel effort to incinerate a ton of hazardous waste than that required for municipal waste, direct non-administrative labor requirements are assumed to be about 1 man-hour per ton of waste. Assuming that each worker works 8 hours per day, the labor requirements would be on the order of 13 persons. A somewhat augmented administrative staff is also assumed. These personnel requirements are given in Table 4-12 along with assumed radiological environments.

TABLE 4-12 . Assumed Worker Requirements for Hazardous Waste Incinerator Facility

Occupations	No. Persons	Dust Environment	Proximity Factor
Manager	1	low	mod
Assistant Manager (Foreman)	1	low	mod
Secretary	1	low	far
Office Manager	1	low	far
Engineer	1	low	far
Waste Shipment Schedulers	2	low	far
Billing/Accounting Personnel	1	low	far
Occupational Health	2	mod	mod
Operators	2	mod	close
Process Controllers	2	mod	mod
Residue Handlers	2	high	close
Maintenance/Labor	2	high	close

Airborne Impacts

Airborne impacts to workers are calculated in a similar manner as those for the municipal incinerator, i.e., equation (4-8):

$$H = \sum_n C_n T_{wa} f_w EDF PDCF\text{-}2 \qquad (4\text{-}8)$$

The waste-to-air transfer factor, T_{wa}, is calculated using a reference hazardous waste density equal to 1 g/cm^3 (Ref. 10). Thus:

TABLE 4-13 . Waste-to-air Transfer Factors for Hazardous Waste Incinerator

Dust Environment	Transfer Factor
low	1.0×10^{-10}
mod	2.0×10^{-10}
high	4.0×10^{-10}

The waste form and package factor, f_w, is assumed to be unity for Residue Handlers, $[10^{(ID-3)}+1]/2$ for Maintenance/Labor, and $10^{(ID-3)}$ for all other personnel. The factor EDF is again assumed to be equal to 0.237.

Direct Gamma Exposures

As for the municipal incinerator, exposures due to direct gamma radiation are calculated as follows (equation 4-11):

$$H = \sum_n C_n (p_d/p_w) f_a CF DF EDF PDCF\text{-}5 \qquad (4\text{-}11)$$

where all the symbols are as defined previously. For this scenario, the effective waste density (p_w) may be calculated as in Section 4.3.2 (see Equation 4-18) with p_h and M_h (non-radioactive hazardous waste density and mass, respectively) replacing p_n and M_n. However, in this case as well, the maximum amount of de minimis waste that could possibly be sent to a hazardous waste incinerator would be so much less than the non-radioactive hazardous waste processed, that the effective density would be given for all practical purposes by the non-radioactive hazardous waste density. This is assumed to be 1 g/cm^3 (Ref. 10).

The factors CF and DF are calculated in a similar manner as the municipal incinerator. The factor CF is assumed to be unity, and the factor DF is given in Table 4-8. The factor EDF is again assumed to be 0.237.

000091

CHAPTER 4.0 REFERENCES

(1) U.S. Nuclear Regulatory Commission, Office of Nuclear Materials Safety and Safeguards, "Draft Environmental Impact Statement on 10 CFR Part 61 : Licensing Requirements for Land Disposal of Radioactive Waste," NUREG-0782, September 1981.

(2) U.S. Atomic Energy Commission, Directorate of Regulatory Standards, Regulatory Guide 1.3, "Assumptions Used for Evaluating the Potential Radiological Consequences of a Loss of Coolant Accident for Boiling Water Reactors," June 1974.

(3) U.S. Atomic Energy Commission, Directorate of Regulatory Standards, Regulatory Guide 1.4, "Assumptions Used for Evaluating the Potential Radiological Consequences of a Loss of Coolant Accident for Pressurized Water Reactors," June 1974.

(4) Healy, J. W., and J. C. Rodgers, "Limits for the Department of Energy Transuranic Wastes," Los Alamos Scientific Laboratory, LA-UR-79-100, January 1979.

(5) Oztunali, O. I., et.al., "Data Base for Radioactive Waste Management, Volume 3, Impacts Analyses Methodology Report," USNRC Report NUREG/CR-1759, November 1981.

(6) U.S. Nuclear Regulatory Commission, Office of Nuclear Materials Safety and Safeguards, "Final Generic Environmental Statement on Uranium Milling," USNRC Report NUREG-0706, September 1980.

(7) Lester, D., et.al. Science Application Inc., "Systems Analysis Study of Shallow Land Burial Project," Volumes 1, 2, 3, USNRC Report NUREG/CR-1963, March 1981.

(8) Wild, R., et. al., "Data Base for Radioactive Waste Management, Volume 2, Waste Source Options Report", USNRC Report NUREG/CR-1759, November, 1981.

(9) U.S. Nuclear Regulatory Commission, Office of Nuclear Materials Safety and Safeguards, "Final Environmental Impact Statement on 10 CFR Part 61 : Licensing Requirements for Land Disposal of Radioactive Waste," NUREG-0945, November 1982.

(10) U.S. Environmental Protection Agency, "Hazardous Waste Generation and Commercial Hazardous Waste Management Capacity," SW-894, Booz-Allen & Hamilton, Inc. and Putnam, Hayes & Barlett, Inc. for U.S. EPA, December, 1980.

5.0 WASTE DISPOSAL OPERATIONAL IMPACTS

This chapter describes a set of assumptions and scenarios by which occupational exposures and operational off-site airborne releases may be determined for land disposal of de minimis radioactive waste.

These assumptions and scenarios are distinctive for different type of disposal facilities. As a consequence, distinctions are made in this chapter between releases and the resulting radiation exposures associated with a generator disposal facility, a well operated municipal landfill (called a "sanitary landfill") facility, a poorly operated municipal landfill (called an "open dump") facility, and a hazardous waste disposal facility. Some of the major distinctions between these facilities which would lead to differences in released radioactivity and resulting exposures are presented in this chapter. Other facility differences, such as the larger groundwater impacts that would be associated with an open dump than with a sanitary landfill, are dealt with in Chapter 6.0.

The generalized equation used in this chapter to determine operational impacts to individuals is:

$$H = \sum_n C_n f_o f_d f_w f_s \text{ PDCF} \qquad (5\text{-}1)$$

where H refers to the individual dose rate in terms of mrem/year, and where C_n is the concentration of a given radionuclide (n) given by:

$$C_n = (Q_n/V_{ann}) \qquad (5\text{-}2)$$

where Q_n is the total annual activity in the de minimis waste stream (in Ci/yr), and V_{ann} is the total radioactive and non-radioactive waste volume disposed per year (in m^3/yr). Impacts are summed over each radionuclide. PDCF stands for the pathway dose conversion factor in units of mrem-m^3/Ci-year. A similar generalized equation is used to calculate impacts (P) to populations in units of person-mrem/year.

The generalized equations are simplified for the calculations in this chapter, since many of the parameters are very similar (or identical) from one application to the next. For example, the time delay factor (f_o) is ulways equal to unity for the calculations in this chapter. This discounts the time delay that would occur between the release of waste by a generator and and its disposal, and is only slightly conservative since the time period would for most cases expected to be no more than a few days.

The site design factor (f_d) in this chapter is given by the waste emplacement efficiency, which accounts for the mixing of waste with soil that would occur during disposal operations. Based upon experience, this factor is assumed to be 0.8 for municipal waste disposal, and 0.75 for hazardous waste disposal.

The waste form and package factor (f_w) accounts for the tendency of the waste form itself to resist interaction with the environment. For pathways involving airborne dispersion, f_w is proportional to the dispersibility multiplier (f_{ds}), where f_{ds} is given in terms of the dispersibility index ID (see Section 2.2.3):

$$f_{ds} = 10^{(ID-3)} \tag{5-3}$$

For pathways involving exposure to direct radiation, f_w is proportional to the accessibility multiplier (f_a), where f_a is given in terms of the accessibility index (see Section 2.2.4):

$$f_a = 10^{(1-IA)} \tag{5-4}$$

The remaining transfer factor, the site selection factor (f_s), accounts for the effects of the site environment on calculated impacts, and in the case of airborne releases, is proportional to either (X/Q) or POP, which are the airborne dispersion factors for individual or population exposures, respectively, as discussed in Section 4.1.5. In the remainder of this chapter calculations are expressed in terms of the appropriate simplified derivatives rather than continuously repeating the above generalized equation (5-1).

5.1 Generator Disposal Facility

This section considers airborne releases originating from disposal operations at a disposal facility located on the property of a waste generator. This disposal facility is assumed to accept waste either in its as-generated form or as a residue from an incineration operation. This incineration operation, and airborne releases resulting from incineration, have been considered in Chapter 4.0.

One major difference between a generator disposal facility and other types of facilities is that occupational exposures to generator workers are not considered in this report; the workers are considered to be radiation workers, whereas the occupational exposures are of prime concern in other types of facilities. Consequently, only off-site airborne releases from a generator disposal facility are considered below.

The size of a generator disposal facility may range from less than an acre to hundreds of acres depending on the waste volume. In any case, the off-site airborne radioactive releases do not directly depend on the facility size; they depend indirectly on the facility size through the volume (or weight) of the processed waste.

The amount of airborne particulates released during disposal operations

000094

strongly depends on the form of the waste, its dispersibility, (e.g., whether the waste has been incinerated), its packaging and the particular disposal operations performed. The effect of an incinerated waste form is considered in the calculations using the dispersibility multiplier, f_{ds} (equation 5-3).

Disposal operations are likely to be carried out in a manner that would result only in negligible quantities of radionuclides being released into the air, particularly if the waste is in a packaged form. This is because site workers would be knowledgable regarding radiation safety and off-site releases would be minimized in compliance with existing regulations. For completeness in this report, however, releases are determined in a very conservative manner by assuming that disposal operations are similar to those at a sanitary landfill (see Section 5.2 and Appendix C). This provides an extreme upper-bound estimate of impacts from the on-site disposal facility.

Two types of exposures are considered: maximum off-site individual, and population. These radiation exposures are calculated through the following equations:

$$H = \sum_n (Q_n/V_{ann})\ f_{ds}\ f_w\ f_s\ \text{PDCF-3} \qquad (5\text{-}5)$$

and

$$P = \sum_n (Q_n/V_{ann})\ f_{ds}\ f_w\ \text{POP PDCF-3} \qquad (5\text{-}6)$$

where

Q_n = Total quantity of radionuclide (n) disposed per year (Ci/year)
V_{ann} = Total annual waste volume disposed (m^3/year)
f_{ds} = Dispersibility multiplier (dimensionless)
f_w = Waste form and package factor (m^3/year)
f_s = Site selection factor (year/m^3)
PDCF-3 = Pathway dose conversion factor-3 (mrem-m^3/Ci-year)

PDCF-3, the pathway dose conversion factor for inhalation and immersion, is discussed in Appendix D. The rest of the factors are discussed below.

The total activity disposed, Q_n, of a given radionuclide n, is the product of the total waste mass or volume disposed with the average radionuclide concentration (Ci per unit mass or volume) in the disposed waste. Care needs to be taken, however, to consider the effects of optional waste processing on Q_n. If the waste is incinerated prior to disposal, Q_n is reduced by the radionuclides which are released during the incineration process. Q_n is then replaced in the calculations with the following:

$$Q_n' = Q_n\ (1-f_r) \qquad (5\text{-}7)$$

where f_r is the fraction of the radionuclides released during incineration. Values for f_r for the reference generator incinerator are given in Chapter 4.0. The assumed waste mass reduction factor for the generator incinerator is supplied by the user of the code, as is the density of the residue.

The total waste disposed, V_{ann}, is merely the volume of radioactive and non-radioactive waste disposed in one year (in m^3). If the waste is incinerated prior to disposal, then V_{ann} is modified to account for the waste volume reduction provided by incineration.

Waste Form and Package Factor

The factor f_w is in units of m^3/yr and denotes the total annual volume of soil/waste mixture dispersed into the air. It can be estimated by assuming that disposal operations are carried out in a similar manner as a sanitary landfill. That is, waste is dumped onto the ground (or into an excavation), spread over a given working area (A), compacted using construction equipment, and then covered with soil. Some mixing with soil occurs during spreading and compaction activities. The mechanical action of the heavy construction equipment results in airborne dispersion of dust and contaminated waste particulates. The dust loading in the air above the working area can furthermore be related to the mobilization rate of dust from the working area. For this scenario, f_w can thus be estimated as follows:

$$f_w = EMP\ E\ (A/p_w)_i \qquad (5\text{-}8)$$

where EMP indicates the waste emplacement efficiency (the fraction of the volume within disposal cells that consists of waste), and where

E = soil/waste mixture mobilization rate (in g/m^2-year) which is taken to be independent of the de minimis waste stream.
A = area of the soil/waste mixture (in m^2) exposed during daily operations.
p_w= density of the soil/waste mixture (in g/m^3) that can be identified with the de minimis waste stream.

The factor E can be calculated based on use of the waste-to-air transfer factor, T_{wa}, which is defined as the ratio of the average dust loading of the air above the working face to the density of the waste being disposed. This dust loading is supplied by the user of the code for on-site disposal, as is the waste density. (As an example, the maximum dust loading for the sanitary landfill is assumed in Section 5.2.3 to be 0.4 mg/m^3.) Based upon Appendix A of Reference 1, E may be related to T_{wa} as follows:

$$T_{wa} = E\ f_r\ G/(u \times p_w) \qquad (5\text{-}9)$$

000096

where E is the mobilization rate defined above, f_r is the fraction of suspended transportable particulates that are respirable (which is assumed to be unity in this report), u is the wind speed in m/year, p_w is the waste/soil mixture density used above, and where G, the geometry factor, is given by

$$G = A / (\text{Width of working area} \times \text{Mixing height}) \quad (5\text{-}10)$$

where A is the area of the soil/waste mixture exposed during disposal operations. The width of the working area can be assumed to be equal to the diameter of a circle having area A, i.e.,

$$\text{Width of the working area } (w_A) = 2\sqrt{A/\pi} \quad (5\text{-}11)$$

Denoting the mixing height by h, (assumed to be 3 meters in this report), and substituting for E, the following expression for f_w is obtained:

$$f_w = EMP \cdot ODF \; T_{wa} \; u \; w_A \; h \quad (5\text{-}12)$$

where ODF stands for the fraction of the year that disposal area operations take place and the assumed dust loading is valid, and w_A stands for the width of the working area. (The value of A must be input by the user of the code). ODF is calculated by assuming that operations are carried out on a regular daily basis and that waste is covered at the end of a working day. This results in ODF equal to 2080/8760 = 0.237.

For purposes of illustration, an assumed waste density of 1 g/cm^3 combined with an example dust loading of 0.4 mg/m^3 yields a value of 4 x 10^{-10} for T_{wa}. The density of the waste p_w, which is input by the user of the code, is used to correct the above T_{wa} value, if necessary. The wind speeds (u) are assumed to be 4.61 m/sec, 3.61 m/sec, and 6.67 m/sec for the northeast, southeast, and southwest sites, respectively. For the generator disposal facility, A, V_{ann}, and the waste emplacement efficiency (EMP) must be input by the user of the code.

Dispersibility Multiplier

The dispersibility multiplier, f_{ds}, is given by equation (5-3), and corrects for the relative dispersibility of the waste in comparison with soil. Its value depends upon the value assumed for the dispersibility index, ID, which may change depending upon the optional incineration operation. If no waste incineration is performed, the ID value originally supplied by the user of the code is assumed. If incineration is performed, the ID value for the resultant residue is assumed to be equal to 3 unless the waste is an activated metal (IA=2), in which case an ID value of 1 is assumed. This results in a multiplier for the waste after incineration equal to unity for all waste except for activated metals, which are assumed to have an f_{ds} value equal to 0.001.

Site Selection Factor

For individual exposures, the factor f_s is the atmospheric dispersion factor (X/Q) multiplied by the exposure duration factor. The reference value for f_s is calculated to be 3.03E-11 year/m^3 for a ground level release (see Section 4.1.5). For population exposure scenarios, it is equal to POP (see Section 4.1.5).

5.2 Sanitary Landfill Disposal

As mentioned previously, a distinction is made in this report between a well operated municipal landfill facility (sanitary landfill) and a poorly operated municipal landfill (open dump). This section presents the assumptions and exposure calculations for a sanitary landfill. The open dump is addressed in Section 5.3.

5.2.1 Overview

Existing landfills are quite variable in size, and can range from less than an acre to several hundreds of acres. One reference states, however, that most facilities cover 10 acres or less (Ref. 2). Another reference estimates that as of 1976, there were about 18,500 sites covering a total of 500,000 acres, which results in a mean surface area of about 27 acres per site (Ref. 3). In this work, the reference sanitary landfill size is assumed to be 25 acres, which is relatively small and is consistent with the size of the reference landfill in Reference 4.

There are three principal variations in sanitary landfill operations: the trench method, the area method, and the ramp method. Each of these similar methods are discussed in Appendix C, although a given site may use more than one method depending upon site and waste characteristics (Ref. 5).

Whichever method is utilized, the deposited waste is compacted and covered with a layer of soil -- at least at the end of the day but often more frequently. The result is a series of cells in which the refuse/soil mixture is completely surrounded by a layer of soil. After the landfill is filled, a final cover is emplaced and compacted. EPA guidelines suggest that the daily cover soil should be a minimum of 6 inches (15 cm) thick, and that cells which will not have additional waste placed on them for three months or more should be covered with 12 inches (30 cm) of cover material. For the final cover, the guidelines suggest that the completed landfill be covered by at least 6 inches (15 cm) of clay (or other low permeable materials) followed by at least 18 inches (45 cm) of additional soil to support a vegetation cover. Deeply rooted vegetation may require an even greater depth of cover (Ref. 6).

The reference landfill in this report is assumed to consist of 24 feet (about 7 m) of waste/soil mixture topped by a 2.5 ft final cover (about 0.75 m). This depth is consistent with the assumptions in Reference 4, and

000098

can be achieved by excavating into the ground or building up the ground surface. The soil/waste mixture is assumed to consist of three 7 ft high waste cells separated vertically by 1 ft soil thicknesses. This is in accordance with the EPA guidelines given above, where it is assumed that a single layer of cells is completed before moving on to the next layer. Cells are separated horizontally by a sloping 6 inch soil layer as shown in Figure 5.1. The total thickness of soil placed over the disposed waste is about 1 m (3.5 ft). Figure 5.1 also illustrates a leachate collection system and liner. These features are included mainly for completeness, since depending upon the design, operation, or environmental setting of the landfill, a leachate collection system and liner may or may not be incorporated.

In general, waste thus disposed in disposal cells is mixed with dirt and daily cover material at about a ratio of 4 parts waste to one part soil, i.e., a waste emplacement efficiency of 0.8. This results in the following total volume of waste deposited in the site as disposed and compacted (which is different from the volume arriving at the site):

$$V_{tot} = (25 \text{ acres})\ (4.356E{+}4 \text{ ft}^2/\text{acre})\ (24 \text{ ft})\ (0.8)$$

or 20,908,800 ft^3 (592,150 m^3). Assuming that the landfill operates for 20 years and for 280 days out of the year (equivalent to 5 days per week plus part of a weekend, and allowing for closures due to weather conditions and holidays), this results in a daily volume of compacted waste equal to 3734 ft^3/day (106 m^3/day).

For economical operations, landfills must compact the waste to minimum densities on the order of 800-1000 lbs/yd^3 (0.47-0.59 g/cm^3) (Ref. 5). Assuming a density equal to 1000 lb/yd^3, the daily mass of waste disposed would be approximately 69 tons/day (or about 63 metric tons(MT)/day).

The daily volume of waste actually received would be somewhat larger (Ref.4). Waste arriving in compactor vehicles has a density of about 600 lbs/yd^3 (0.36 g/cm^3), while uncompacted waste in garbage cans has a density of about 250 lbs/yd^3 (0.15 g/cm^3). This would result in a daily as-received volume at the site ranging from 6224 ft^3/day to 14,935 ft^3/day.

5.2.2 Personnel Requirements

Personnel requirements for the reference sanitary landfill are somewhat difficult to project. The available data is scattered; the values below are estimated based upon consideration of a number of sources (Refs. 5-9).

Reference 5 observes that occupations associated with operation of a sanitary landfill can be separated into two groups: administration and operation. The types of activities associated with each group are presented in Table 5-1.

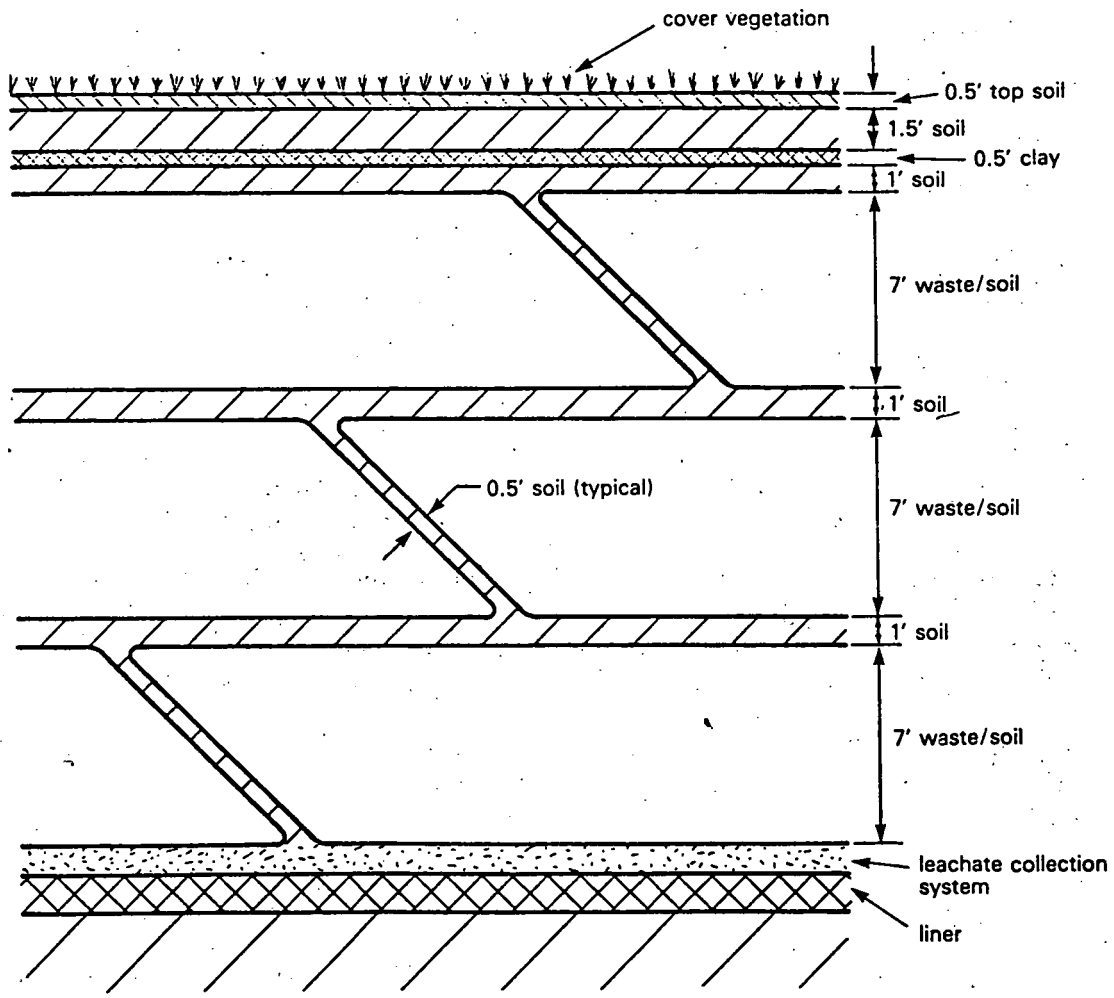

CROSS-SECTION OF SANITARY LANDFILL

FIGURE 5.1

000100

TABLE 5-1 . Types of Activities at Sanitary Landfill

Administration	Operation	
Management	Weighing	Operating Equipment
Accounting	Maintaining equipment	o spreading
Billing	Traffic control	o compacting
Engineering	Vector control	o excavating
Typing	Litter control	o hauling
Filing	Site Security	o road maintenance
		o dust control

At most municipalities, administrative functions will probably be part of a governmental or contractual organization and will be removed from the sanitary landfill site.

As far as operations are concerned, Reference 4 provides a general rule for labor requirements. This rule is that "4 to 6 laborers are involved in the deposition of 1000 yd^3 of refuse per day." This includes the foreman, equipment operators, gatemen, and so forth, but does not include administrative personnel. An uncertainty is whether this refers to waste as disposed and compacted or waste as received at the site.

Reference 7 provides a table of estimated landfill site personnel requirements as a function of daily waste tonnage, based upon Los Angeles County Sanitation Districts. This table is reproduced below:

TABLE 5-2 . Personnel Requirements for Landfills in Los Angeles County Sanitation Districts

	Tons per day			
Classification	200	500	1,000	4,000
Equipment Operator	1	2	4	12
Laborer	0	0	1	2
Weighmaster	1	1	1	3
Foremen	0	0	1	1

Reference 7 also provides a summary of the projected labor (and cost) requirements for 2 proposed sites in the Des Moines, Iowa, Metropolitan area. These two sites cover 522 acres, and the total number of personnel required are given in Table 5-3.

TABLE 5-3 . Personnel Requirements for Proposed Sites in Des Moines Metropolitan Area

Occupation	Personnel
Equipment Operators	7-8
Laborers	8
Foremen	2
Gate keeper/fee collectors	4
Total :	21-22

From the above data, it can be seen that the personnel requirements at the reference 25-acre sanitary landfill are on the order of a single worker. This produces some slight difficulties. One can either greatly increase the size of the reference landfill or determine the personnel requirements for a large landfill and ratio these requirements to the reference 25-acre landfill. This is the same as saying that the single worker has a number of jobs at the landfill, and what one is essentially doing is determining what fraction of the time the worker is spending at each job. The latter approach is adopted in this report. The personnel requirements for an ersatz 250-acre site are estimated in Table 5-4.

TABLE 5-4 . Sanitary Landfill Facility Personnel

Occupation	Personnel
Foremen	1
Equipment Operator	3
Laborer	4
Gate keeper/fee collector weigher/traffic control	2
	10

Based on this ersatz site, the impacts to each worker are calculated, the total impacts summed, and then divided by the total number of workers, 10.

5.2.3 Assumptions for Personnel Exposures

This section considers exposures to sanitary landfill personnel. As in the case of the municipal incinerator (see Section 4.2), it is convenient to determine exposures by estimating the amount of time that the worker spends in proximity to radiation sources (or the average distance from the sources) as well as the dust environment that he works in. The former

000102

relationship would be used to estimate exposures due to direct gamma radiation. The latter relationship would be used to estimate inhalation and immersion exposures. The radiological content of the dust environment would be a function of the dilution of the de minimis waste with the non-radioactive waste and the tendency for the de minimis waste to disperse into respirable particles as indicated by the dispersibility index, ID.

At any rate, when waste arrives at the landfill in trucks, the trucks are first weighed and a fee determined. The trucks are then directed to the operating face of the landfill, where the waste is dumped. The trucks then leave the site. The dumped waste is spread and compacted with construction equipment, and in the process the waste is mixed with and partially covered by non-contaminated soil. The waste is totally covered by a layer of dirt at the end of each working day at least 6 inches thick. Older sections of the landfill are covered by a thickness of dirt at least 1 ft. thick. Temporary snow fences are placed around the open face to catch wind scattered paper and other lightweight materials. This means that there are 2 major sources of radiation exposure to site personnel:

(1) the open working face would be a source of direct gamma radiation plus contaminated airborne dust,

(2) covered disposed waste would be a source of direct gamma radiation attenuated through 6 to 12 inches of dirt.

Much more minor sources of personnel exposures would be from the following: (1) direct gamma radiation from radionuclides deposited on the ground surface after being blown from the open face, (2) direct gamma radiation from waste delivery trucks, and (3) inhalation and immersion doses from resuspended dust particles away from the open working face. These three subpathways would be very minor compared to the two major pathways, since the contamination would first have to settle on the ground and/or be mobilized by wind or other factors to affect the personnel, and direct gamma radiation from trucks are believed to be intrinsically considered as part of exposures received from proximity to the open working face. The first and third subpathways are considered in any case, however, in the PDCF used for calculating airborne impacts. At any rate, the assumed proximity relationships and dust environments are given in Table 5-5.

Airborne Releases From the Open Face

All site personnel are affected from this source. However, equipment operators are very close to the open working face and their dust environment is quite high, whereas the dust environment and proximity of the other site personnel to the working face are moderate to low. Consequently, the exposures are given by the following:

$$H = \sum_{n} (Q_n/V_{ann})\ EMP\ f_{ds}\ f_s\ PDCF\text{-}1 \qquad (5\text{-}13)$$

TABLE 5-5 . Assumptions for Sanitary Landfill Personnel

Occupation	Number	Proximity to Working Face	Average Dust Environment
Foreman*	1	mod (30m)	mod (0.2 mg/m^3)
Equip. Op.	3	close (1m)	high (0.4 mg/m^3)
Laborer	4	mod (30m)	mod (0.2 mg/m^3)
Gate/Traffic	2	mod (30m)	low (0.1 mg/m^3)

where Q_n, V_{ann}, EMP, f_{ds}, and PDCF-1 are as explained before, and where

$$f_s = T_{wa} \text{ EDF} \tag{5-14}$$

The factor EMP is assumed to be 0.80, EDF is equal to 0.237, and T_{wa} is the waste-to-air transfer factor which is defined as the ratio of the airborne mass loading to the waste density. The mass loading values are discussed in Appendix C, and are taken as being 0.400 mg/m^3, representative of the close working conditions of equipment operators, 0.200 mg/m^3, representative of moderate distance working conditions of the foreman and laborers, and 0.100 mg/m^3, representative of the working environment of the gate keepers. Assuming a waste density of 0.59 g/cm^3 for municipal waste results in the transfer factors listed in Table 5-6.

TABLE 5-6 . Waste-to-Air Transfer Factors for Sanitary Landfill

Personnel	T_{wa}
Equipment Operators	6.78×10^{-10}
Foreman	3.39×10^{-10}
Laborers	3.39×10^{-10}
Gate Keepers	1.70×10^{-10}

Direct Gamma Radiation From the Open Face

All the personnel are affected from this source to varying degrees. The equation governing this exposure for each person is as follows:

$$H = \sum_n (p_d/p_w)\ (Q_n/V_{ann})\ \text{EMP}\ f_a\ \text{CF DF EDF PDCF-5} \tag{5-15}$$

where Q_n, V_{ann}, EMP, f_a, and EDF are as explained before, and where

000104

p_d = Density of dirt (1.6 g/cm^3)
p_w = Density of waste (g/cm^3)
DF = Distance factor (dimensionless)
CF = Correction factor (dimensionless) for the finite extent of the source
PDCF-5 = Pathway dose conversion factor-5 (mrem-m^3/Ci-year)

The factors p_d and p_w are densities. The value of p_d is taken to be 1.6 g/cm^3, and the value of p_w is variable depending on the waste disposed, e.g., for municipal waste disposal it is taken to be 0.59 g/cm^3. The total annual volume of waste, V_{ann}, is the volume of waste as disposed and compacted. This value was discussed as being about 592,150 m^3 for 20 years, which corresponds to about 29,610 m^3 of waste annually.

The distance factor DF, and the correction factor CF have been discussed in Chapter 3.0. For the calculation of DF, the proximities of the workers to the radiation source are assumed to be 1 m for the equipment operators, 30 m for the laborers and foreman, and 50 m for the gate keepers. The factor CF is the correction factor for the finite extent of the source. The radius of the direct gamma radiation source can be calculated by determining the effective area of the open working face for each site worker (see Appendix C). These areas are 70.8 m^2 for the equipment operators, and 15 m^2 for the other personnel which correspond to radiation source radii of 4.75 m, and 2.2 m, respectively.

Finally, PDCF-5 represents the pathway dose conversion factor for direct gamma radiation for 1 meter above soil having an infinite thickness and infinite lateral extent (see Appendix D).

Covered Waste

Exposures to each worker are assumed to result from direct gamma radiation attenuated through an average of 0.75 ft of soil covering the disposed waste. These exposures are assumed to be equally applicable to each worker and are given by the following formula:

$$H = \sum_n (p_d/p_w)\ (Q_n/V_{ann})\ \text{EMP}\ f_a \exp(-\mu_d t)\ \text{EDF PDCF-5} \qquad (5\text{-}16)$$

where the above symbols are as explained before. μ_d is the attenuation coefficient for soil, and t stands for the thickness of the cover. The attenuation coefficient, μ_d, is taken to be that for SiO_2 at 0.7 MeV, i.e., 0.1212 cm^{-1}, and the cover thickness, t, is 0.23 m (0.75 ft). The factor EDF is again given as 0.237. p_d is assumed to be 1.6 g/cm^3 while p_w is assumed to be 0.59 g/cm^3.

It should be noted that there are no CF or DF factors in the above equation. They are both assumed to be unity -- i.e., it is assumed that the exposure distance to disposed and covered waste is always 1 meter, and the source extends in infinite lateral directions.

5.2.4 Offsite Releases

The equations for calculating individual and population exposures due to airborne releases during operations have been given in Section 5.1:

$$H = \sum_n (Q_n/V_{ann})\ f_{ds}\ f_w\ f_s\ PDCF\text{-}3 \qquad (5\text{-}5)$$

$$P = \sum_n (Q_n/V_{ann})\ f_{ds}\ f_w\ POP\ PDCF\text{-}3 \qquad (5\text{-}6)$$

where the annual volume of waste disposed, V_{ann}, is 29,610 m^3, f_{ds} is given by equation 5-3, and f_s and POP are discussed in Sections 4.1.5 and 4.3.1.

The waste form and package factor, f_w, is calculated in a similar manner as f_w in Section 5.1, i.e.,

$$f_w = EMP\ ODF\ T_{wa}\ u\ w_A\ h \qquad (5\text{-}12)$$

where EMP is 0.8, ODF is 0.237, and h is 3 m. The assumed wind speed (u) has been given in Section 5.1 for each of the three reference sites. (The user of the code can optionally input site-specific values.) The factor w_A is the effective width of the working face and is calculated using equation (5-11) based upon an assumed area of the working face equal to 86 m^2. (This area is calculated for the sanitary landfill in Appendix C.)

T_{wa} is the ratio of the maximum airborne dust loading to the waste density. For municipal waste disposal, the maximum dust loading is assumed to be 0.4 mg/m^3. The waste density is somewhat more complicated to determine, but is assumed to be equal to the average density of the waste in the site after disposal and compaction. This density is taken to be 0.59 g/cm^3 (see Section 5.2.1).

5.3 Open Dump

As the name implies, operation of an open dump is a much less organized process than operation of a sanitary landfill. Consequently, characterizing the open dump in terms of size and operation is more difficult than for a sanitary landfill. In any case, the reference open dump is assumed to cover 25 acres, which is the same size as the sanitary landfill, and like the sanitary landfill is conservatively assumed to operate for 20 years prior to closure. (Continuous operation of open dumps far into the future may be very problematical).

000106

5.3.1 Overview

The daily and annual volume and mass of waste disposed at the dump is difficult to project. Unlike the sanitary landfill, the deposited waste is allowed to sit around for several days prior to being covered with dirt. In addition, open burning is practiced. This means that a cross-sectional view of the completed dump would reveal a helter-skelter mixture of waste and soil rather than the more regular series of cells that would characterize the sanitary landfill. The practice of open burning would reduce the volume of the deposited waste. The degree of volume reduction, however, would probably not be terribly high. At a municipal incinerator the volume reduction factor is typically less than 10, and the efficiency of waste combustion at the dump would be expected to be considerably lower. In addition, the less organized nature of the operation would imply that the degree of waste compaction achieved during waste emplacement would not be as high as at a properly operated sanitary landfill. Given this -- the somewhat increased volume reduction due to waste burning being balanced by the expected decrease in waste/soil compaction -- the average volume and mass of waste disposed at the dump is assumed to be roughly the same as at the sanitary landfill.

After the dump is filled, the dump is assumed to be covered with a layer of rather indifferently compacted soil. The planting of a layer of cover vegetation is also assumed to be performed in a rather indifferent manner. The thickness of soil covering the top portion of the waste is assumed to significantly less than that for the sanitary landfill, i.e., about 0.3 m (1 ft). Moreover, unlike the sanitary landfill, there is assumed to be no low permeability layer within the final cover. Also different from the sanitary landfill, much less care is taken to compact and grade the waste and final cover.

5.3.2 Personnel Requirements

Personnel requirements for the open dump would be expected to be reduced as compared with the sanitary landfill. This is because the operators of the dump would be expected to cut corners where possible, and getting by with a less than an optimal number of workers is one obvious way of doing so. There is, however, no obvious rule-of-thumb by which to determine the degree to which corners will be cut. The sanitary landfill was assumed to require 10 men for a 250-acre site. If a 250-acre open dump is assumed to be 20% less efficient in operation, this would mean that the open dump would require only 8 men.

The open dump is therefore assumed to require two fewer personnel (8) than the sanitary landfill. The personnel occupations are assumed to be roughly the same as shown in Table 5-7. During the week, the waste would be gathered in piles and burned during the late afternoon and evening of each working day. The waste is also assumed to receive a soil cover once a week rather than every day. Additional discussion of the assumed operation of the reference open dump is provided in Appendix C.

TABLE 5-7 . Open Dump Personnel

Occupation	Personnel
Foreman	1
Equipment Operator	2
Laborer	3
Gate keeper/fee collector/ weigher/traffic control	2

5.3.3 Assumptions for Personnel Exposures

Occupational exposures at the open dump would be expected to be related to two major sources plus some minor sources. The two major sources include: (1) direct gamma exposures from being in proximity to dumped but uncovered waste material, as well as inhalation and immersion exposures from dust resuspended from such material; and (2) direct gamma exposures from the disposed and covered waste as attenuated through a layer of soil. The first set of exposures would include waste material that has been dumped in addition to ashes and other residues resulting from waste burning. For the second set of exposures, the degree of shielding provided by the covering soil could possibly be less than that at the sanitary landfill.

The minor sources of radiation exposures would be generally similar to those for the sanitary landfill. These include (1) direct gamma exposures from waste delivery trucks, (2) direct gamma exposures from covered waste soil surfaces contaminated from deposited dust particles arising from the open areas of the dump, and (3) resuspension of the deposited dust particles. Contamination of covered surfaces would probably be more significant than at a sanitary landfill. These subpathways, however, although probably much less significant in terms of operational exposures than the two major sources discussed above, are believed to be intrinsically considered as part of the calculations. The assumed proximity factors and average dust environments for the reference of open dump are given in Table 5-8.

TABLE 5-8 . Assumptions for Open Dump Personnel

Occupation	Number	Proximity to Working Face	Average Dust Environment
Foreman	1	mod (30m)	mod (.25 mg/m^3)
Equip. Op.	2	close (1m)	high (.5 mg/m^3)
Laborers	3	mod (30m)	mod (.25 mg/m^3)
Gate/Traffic	2	far (50m)	low (.15 mg/m^3)

000108

Exposures to covered waste are the same as those at the sanitary landfill for all personnel, except that the thickness of covering soil is assumed to be less than that of the sanitary landfill.

Based on the above assumptions, the following are the personnel exposures assumed to occur at an open dump.

Airborne Releases From the Waste

This component of personnel exposure is assumed to be dependent on the average dust environment discussed above, i.e, it is assumed that the equation is given by the following:

$$H = \sum_{n} (Q_n/V_{tot})\ EMP\ f_{ds}\ f_s\ PDCF\text{-}1 \qquad (5\text{-}13)$$

where all the symbols have been explained before. Except for f_s, all parameters have the same values as those for the sanitary landfill (Section 5.2.3). As before f_s is expressed as follows:

$$f_s = T_{wa}\ EDF \qquad (5\text{-}14)$$

Values for T_{wa} are different from those given in Section 5.2.3 due to different dust loadings (Table 5-8), and due to different densities. The higher dust loadings account for the expected higher ash content in the disposed waste created by the open burning operations. The densities assumed are an average of the piled waste (0.27 g/cm^3) and the working face (0.59 g/cm^3), or 0.43 g/cm^3. Table 5-9 presents the factors T_{wa} calculated for each of the site personnel.

TABLE 5-9 . Waste-to-Air Transfer Factors for Open Dump

Personnel	T_{wa}
Equipment Operators	1.16×10^{-09}
Foreman	5.81×10^{-10}
Laborers	5.81×10^{-10}
Gate/traffic	3.49×10^{-10}

The exposure duration factor, EDF, is equal to 0.237 for all personnel. The factor f_{ds} is determined through the assumption that about half the waste delivered to the open dump is burned. (The remainder is covered by dirt or other material, and inefficient combustion is expected in any case.) f_{ds} is therefore given as $[1 + 10^{(ID-3)}]/2$, where ID is input by the code user.

Direct Gamma From Uncovered and Piled Waste

For these exposures, the usual equation for direct gamma exposures given in Section 5.2 is utilized:

$$H = \sum_n (p_d/p_w)\ (Q_n/V_{ann})\ EMP\ f_a\ CF\ DF\ EDF\ PDCF\text{-}5 \qquad (5\text{-}15)$$

where all the symbols have been explained before. The factor V_{ann} is again 29,610 m^3 (annual volume for a 25-acre site), the density of the waste is 0.43 g/cm^3, and the correction factor CF and distance factor DF are calculated based on Table 5-8 and the effective exposure areas. These areas have been calculated in Appendix C, Section C.3.2.3, as being 212 m^2 for the equipment operators and 45.1 m^2 for the other personnel; these areas correspond to source radii of 8.2 m and 3.79 m, respectively. The EDF value for all personnel is 0.237.

Covered Waste

Exposures to workers resulting from direct gamma radiation as attenuated through a soil cover are calculated using equation 5-16 in a very similar manner as those for the sanitary landfill. The only difference is that a somewhat thinner soil cover is assumed -- i.e., half that of the sanitary landfill.

5.3.4 Offsite Releases

Offsite impacts to individuals and population resulting from the open dump operation include those from waste spreading and compaction activities as well as those from open burning. The former are calculated in a similar manner as in Section 5.2.4:

$$H = \sum_n (Q_n/V_{ann})\ f_{ds}\ f_w\ f_s\ PDCF\text{-}3 \qquad (5\text{-}5)$$

$$P = \sum_n (Q_n/V_{ann})\ f_{ds}\ f_w\ POP\ PDCF\text{-}3 \qquad (5\text{-}6)$$

where all the symbols have been explained before. For the open dump, however, different values are assumed for the area of the working face, the maximum dust loading, and the density of the soil/waste mixture. For a 25-acre open dump, the areal extent of the working face is assumed to be 257 m^2 based on the data presented in Appendix C; the maximum dust loading is 0.5 mg/m^3; and the soil/waste density is again assumed to equal 0.43 g/cm^3 (see Section 5.2.4).

Impacts due to open burning are calculated in a similar manner as those for waste incineration:

000110

$$H = \sum_n Q_n f_r f_s \text{ PDCF-3} \quad (4\text{-}3)$$

$$P = \sum_n Q_n f_r \text{ POP PDCF-3} \quad (4\text{-}4)$$

In the above equations, f_s is given as the product of (X/Q) and EDF as discussed in Section 4.1.5, and where ground-level release is assumed. In this case, however, consideration is given to the practice of open burning during late afternoons, in which case the maximum individual is assumed to be exposed for at most only 4 hours per working day. This results in an EDF value of 1040/8760 = 0.119. The calculation of POP is also discussed in Section 4.1.5.

The radionuclide release fractions, f_r, are estimated based upon EPA data on particulate release from open waste incineration activities, and upon information presented in Appendix C regarding releases from various types of incinerators. For particulate release, EPA estimates a release of about 37 lbs of particulates per ton of municipal waste for combustion of such waste in an open trench (Ref. 10). (Also see Table C-3 of Appendix C.) This corresponds to a release fraction of 0.019 for non-volatile radionuclides. Twice this value (0.038) is assumed for all volatile and semi-volatile radionuclides except H-3 and C-14. For these radionuclides, release fractions equal to 0.90 and 0.75, respectively, are assumed in accordance with release fractions assumed for incineration operations.

5.4 Incineration and Sorting Variations for Municipal Waste

In the preceeding two sections, a series of equations and assumed values for parameters making up these equations were developed for the reference sanitary landfill and open dump municipal waste disposal facilities. These equations and parameter values were developed assuming no waste processing prior to waste disposal. This section discusses the changes to these equations and parameter values that would result from the different municipal waste processing options considered in this report.

Briefly, the four basic municipal waste processing options include a base incineration option plus three "sorting" options:

- o Incineration;
- o Size-reduction of the waste followed by incineration;
- o Size-reduction, separation of non-combustible fraction, and incineration of the combustible fraction; and
- o Size-reduction, separation of the non-combustible fraction, recovery of the metal/glass component, and incineration of the combustible fraction.

In each of the above four processing options, the waste is incinerated and transformed into a residue having reduced volume and mass than the input waste. This residue is then disposed in the landfill in place of the

original de minimis waste stream. For the last two options an additional waste stream is created which consists of the discarded non-combustible component separated from the size-reduced waste.

In the preceding two sections, five basic sets of equations were used to calculate operational impacts during waste disposal operations (Equations 5-5, 5-6, 5-13, 5-15, and 5-16). These five sets of equations are generally applicable to both the sanitary landfill and the open dump, although some differences in the calculational details and parameter values are incorporated for the two facilities. One example is the higher site airborne dust loadings assumed for the open dump.

Table 5-10 summarizes the equation parameters which are modified depending upon the processing option considered. These modified parameters include the total activity disposed, Q_n, the waste dispersability multiplier, f_{ds}, and the waste density, p_w. Also included are the volumes and masses of residue and discard material generated. These are listed as fractions of the volume and mass of the municipal waste input to the incinerator.

As shown, the radionuclide quantity, Q_n, is replaced by Q_n', which accounts for radionuclides lost during incineration and separations. For residue, the dispersibility multiplier, is taken to be unity for all de minimis waste streams except for activated metal. For discard material, the dispersibility multiplier is calculated using the dispersibility factor, ID, originally read in by the user of the code. In the table, IC_c refers to the fraction (by weight) of the de minimus waste that is combustible material, IC_m the metal fraction, IC_g the glass fraction, and IC_o the other fraction.

5.5 Hazardous Waste Disposal Facility

This section considers the scenarios and radiation exposures resulting from releases of radioactive material from hazardous waste disposal facilities (HWF).

5.5.1 Overview

Over the last decade considerable interest has grown regarding safe disposal of hazardous waste. As of about the 1977 time frame, EPA estimated that over 90% of the hazardous waste being generated was being handled by disposal practices which did not seem adequate to protect public health and the environment (Ref. 9). As a result of this concern, the Resource Conservation and Recovery Act was enacted in 1976 which called for a national program to control hazardous waste.

It is apparent that hazardous waste disposal is in a period of transition, and it will take time to modify past and current disposal practices. The authors believe that disposal practices will probably be much more quickly updated for disposal facilities operated commercially, since these are much more visible and so generate more public interest.

000112

TABLE 5-10 . Variations in Waste Properties Resulting From Sorting Options

Parameter	Base Incinerator	Sorting Option 1 (Size-red.)	Sorting Option 2 (Separations)	Sorting Option 3 (Recovery)
Residue:				
Q_n'	$Q_n(1-f_r)$	$Q_n(1-f_r)$	$Q_n(1-f_r)MUL$[a]	$Q_n(1-f_r)MUL$
f_{ds} IA=1	1	1	1	1
IA=2	.001	.001	.001	.001
f_a	1	1	1	1
p_w (g/cm^3)	0.89	0.89	0.89	0.89
V_{res}	1/6 V[b]	1/6 V	.036 V	.036 V
M_{res}	1/2 M[c]	1/2 M	.11 M	.11 M
Discard Material:				
Q_n'	-	-	$Q_n(1-MUL)$	Q_nDIS[d]
f_{ds}	-	-	$10^{(ID-3)}$	$10^{(ID-3)}$
f_a	-	-	1	1
p_w (g/cm^3)	-	-	0.62	0.84
V_{dis}	-	-	.093 V	.056 V
M_{dis}	-	-	.37 M	.22 M

(a) $MUL = .95\ IC_c + .05\ IC_m + .05\ IC_g + .10\ IC_o$

(b) V = Volume of all waste originally input to incinerator

(c) M = Mass of all waste originally input to incinerator

(d) $DIS = .05\ IC_c + .05\ IC_m + .10\ IC_g + .90\ IC_o$

Given the tighter disposal requirements as discussed above, coupled with public interest in safe waste disposal, there is considerably less justification for separating HWF's into well operated and poorly operated facilities than there was for separating municipal landfills into sanitary landfills and open dumps. Continuing use of blatantly poor disposal practices is not likely to occur at least at the commercial disposal facilities. Given the above, the reference disposal facility is not separated into a "well operated" and "poorly operated" site as was the case for the reference municipal waste disposal facility. A consistent level of operations is assumed.

The characteristics of the reference hazardous waste disposal facility are developed using a number of sources. The reference facility is not meant to be indicative of any one of the 44 commercial disposal facilities currently in operation, but is meant to be typical of currently licensed operations.

The reference HWF is assumed to have 150 acres allocated for disposal operations, and have a maximum waste disposal capacity of 64.5×10^6 ft^3. Disposal is assumed to be carried out in a series of excavated cells, and 64 such cells are assumed in this report (see Appendix C). Assuming a 20 year operating life, 64 disposal cells corresponds to construction of about 3 cells/year, and an average disposal capacity per cell of 1,008,000 ft^3. Assuming an average disposal efficiency of 75% within the disposal cells, this results in a total excavated volume per cell of 1,340,000 ft^3. This can be achieved by a disposal cell having overall surface dimensions of 260 ft by 360 ft, overall interior bottom dimensions of about 110 ft by 210 ft (given a 1:3 slope on the sides of the cell), and an average depth of about 25 ft. Disposal cells are assumed to be separated by a space equal to 15 ft.

There are specific liner requirements in the EPA regulations, and draft guidance on the design and construction of liners has been published (see Appendix C). In addition, there are restrictions on the containers and contents of the wastes. Furthermore, completed disposal cells must be capped with a final cover designed to achieve the following:

- o minimize migration of liquids;
- o function with minimum maintenance;
- o promote drainage and minimize erosion of cover;
- o accommodate settling and subsidence; and
- o have a permeability equal to or less than that of the bottom liner.

In practice, disposal cell covers constructed in compliance with EPA regulations are generally constructed of low permeability layers such as clay and synthetic membranes. The cover is assumed to be composed of 2 ft of compacted clay followed by a synthetic membrane, 1 ft of sand, and 2 ft of cover soil. This results in a cap thickness of about 5 ft (1.5 m). Further details on the operation of the HWF is given in Appendix C.

000114

5.5.2 Personnel Requirements

Personnel requirements for the reference facility have been estimated based upon information contained in References 10 through 12, and upon a comparison of the types of operations expected to be carried out at the HWF with typical operations at a low-level radioactive waste disposal facility. Many of the same operations are carried out at both types of facilities; however, there are a number of differences, particularly regarding waste placement operations. At a low-level waste facility, waste is almost always delivered in a packaged form. The presence of ionizing radiation emitted by the packages complicates waste placement, and many of the waste packages are disposed randomly. At an HWF, much of the waste is delivered in a bulk (unpackaged) form. However, the lack of ionizing radiation emitted by the waste facilitates handling and emplacement of waste delivered in both packaged and bulk forms. Packaged waste containers are thus generally stacked in place.

Personnel activities can be divided into management and staff, where most of the staff would be involved in waste handling and disposal activities. These include workers such as equipment operators, semi-skilled laborers, and unskilled laborers. To estimate the number of such waste handlers required, assumptions must be made on the received waste distribution. As outlined in Appendix C, about 20% of the waste is assumed to arrive at the site in drums or other packages, about 20% is assumed to arrive as a sludge, and about 60% is assumed to arrive as an unpackaged material which is more or less a solid. Given this distribution, the personnel requirements for HWF's are given in Table 5-11 (see Appendix C).

TABLE 5-11 . Hazardous Waste Facility Personnel

Management	Staff
1 Site manager	2 Waste shipment schedulers
1 Assistant site manager	2 Billing/accounting personnel
1 Foreman	1 Laboratory technician
1 Environmental services manager	3 Industrial safety personnel
1 Safety supervisor	8 Equipment operators
1 Customer service coordinator	14 Semi-skilled laborers (includes mechanics)
1 Records manager	15 Unskilled laborers
1 Security/traffic control coordinator	3 Security/traffic control personnel (includes 2 gatekeepers)
2 Secretarial personnel	

5.5.3 Assumptions for Personnel Exposures

In estimating radiological impacts to site personnel, it is important to consider the operational similarities and differences between a municipal

landfill and an HWF. The similarities indicate that the general manner in which radiological impacts are calculated would be similar for the two facilities. Waste is delivered in trucks which are directed to the particular working area of the HWF, and after dumping the waste, the trucks leave the site and the waste is covered. This means that it will be again be generally convenient to estimate exposures by estimating the average distance of a particular worker from a radiation source, and the average dust environment that the worker works in.

Two main sources of radiation exposure may be thus postulated for site personnel: (1) disposed waste will be a source of direct radiation as attenuated through a layer of soil, and (2) the working area of the HWF will be a source of direct radiation plus airborne contamination. Minor sources of personnel exposures include those from direct radiation emitted by waste in delivery trucks, those during waste receipt and analysis (if performed), by radionuclides deposited on the ground surface after being blown from the open face, and from resuspension of the dust particles. These additional minor sources of radiation exposure, however, are believed to be intrinsically considered in the calculations.

Exposures due to direct radiation emitted by disposed waste as attenuated through a layer of soil would be calculated in a similar manner as those for the sanitary landfill. All personnel would be assumed to be equally exposed to gamma radiation emitted by disposed waste.

Operational differences between a municipal landfill and an HWF principally affect calculation of exposures due to airborne releases from the HWF working area. At a municipal landfill, whether or not waste arrives in a packaged form does not appreciably influence disposal operations. At a municipal landfill, almost all of the waste arrives in an unpackaged form, and packaged or not, standard practice is to spread the waste on the ground in thin layers and then crush and compact it using heavy machinery. This crushing and spreading operation provides a driving mechanism for airborne dispersion of waste particulates.

At a HWF, operational safety considerations require that much greater attention be given to minimizing dispersion of airborne particulates. Packaged waste would be stacked in place to conserve disposal space, and airborne releases would be negligible except for the possible event of an accident in which a container falls, breaks open, and releases part of its contents into the air. Even given this situation, such exposures would principally impact only those directly handling the waste; administrative personnel would not be impacted.

If waste arrives in an unpackaged form, it is assumed to be dumped into prepared areas to form a series of individual waste cells. Waste would be dumped from above or from the sides of the cells, and personnel contact would be minimized. Unlike the municipal landfill, there would be no crushing or spreading operations to provide a mechanical driving force for airborne dispersion. Rather, waste would be covered with a layer of soil prior to compaction to minimize airborne dispersion. This means that

000116

about the only mechanisms for dispersion would be (1) waste emplacement activities (dumping) and (2) wind suspension prior to covering with soil. In addition, much of the waste will be received in a damp or semi-liquid form, which would resist dispersion. A summary of the proximity relationships and average distances corresponding to the proximity relationships is given as Table 5-12.

TABLE 5-12 . Assumptions on Hazardous Waste Facility Personnel

Occupation	Number	Proximity to Working Face
Site manager	1	far (50 m)
Assistant site manager	1	far (50 m)
Foreman	1	mod (30 m)
Environmental services manager	1	far (50 m)
Safety supervisor	1	far (50 m)
Customer service coordinator	1	far (50 m)
Records manager	1	far (50 m)
Security/traffic control coordinator	1	far (50 m)
Secretarial personnel	2	far (50 m)
Waste shipment schedulers	2	far (50 m)
Billing/accounting personnel	2	far (50 m)
Laboratory technician	1	far (50 m)
Industrial safety personnel	3	mod (30 m)
Equipment operators	8	mod (30 m)
Semi-skilled laborers	14	close(1 m)
Unskilled laborers	15	close(1 m)
Security/traffic control (2 gatekeepers)	3	mod (30 m)

5.5.3.1 Airborne Releases From the Working Face

Impacts due to airborne releases for the working face are calculated differently depending upon whether the waste arrives in a packaged or unpackaged form.

Packaged Waste

If the waste arrives at the HWF in a packaged form, impacts to site personnel are calculated by assuming that an accident occasionally occurs in which a waste package drops from a significant height (e.g., from a sling or hoist), breaks open, and releases a portion of its contents into the air. Workmen near the accident may be thus very briefly immersed in a puff of radioactive particulates. To model impacts, a reference level of particulate release is first considered assuming a very dispersible waste form as applied to a release scenario obtained from waste transportation

accident calculations. Then, a correction factor is applied to take into consideration the relative dispersibility of the waste form.

As part of work performed by the Department of Transportation (DOT) to determine requirements for transport of radioactive material, an accident of moderate severity is assumed in which 0.1% of the contents of a waste package is released into the air. Of this material, 0.1% is assumed to be inhaled by an individual (Ref. 11). This is believed to be conservative as indicated by Table 31 in Reference 12, which lists respirable mass fractions (generally < 0.1%) for various fine grained and dispersible materials. The following equation is used to calculate impacts to a few individuals:

$$H = \sum_{n} C_p \, f_r \, f_{ds} \, V_q \, f_q \, f_c \, \text{PDCF-2} \qquad (5\text{-}17)$$

where PDCF-2 is pathway dose conversion factor no. 2 as discussed in Appendix D, and where

C_p = concentration of nuclide n in the de minimis waste (Ci/m^3);
f_r = fraction of the package contents inhaled (assumed to be 10^{-6} - Ref. 11);
f_{ds} = dispersibility factor (see equation 5-2);
V_q = volume of the container (assumed to be 0.208 m^3);
f_q = frequency of accident (yr^{-1}); and
f_c = correction factor to account for accident conditions (taken to be 1/8000 yr/m^3 - see below).

The accident occurs prior to mixing of de minimis waste with other waste; consequently, C_p is the concentration in the de minimis waste container. The factor f_r is assumed based on the assumptions in Reference 11.

The factor f_{ds} is the correction factor given by equation (5-2) which accounts for the relative dispersibilities of various waste forms; it is a function of the dispersibility multiplier ID as discussed in Section 5.1.

The volume V_q is assumed to be that of a single 55-gallon drum, which is the usual shipping container for packaged waste. The factor f_q accounts for the annual frequency of an accident of sufficient extent to result in the above radionuclide release. The authors are not aware of any published data on the frequency of accidents at hazardous waste facilities. The factor f_q is therefore assigned to be unity. In addition, unlike other scenarios, the accident is assumed to be not "distributed" through the number of hazardous waste facilities specified by the parameter IX4 in Table 2-7. The accident is assumed to happen only once in a year in one of the hazardous waste facilities. If the user of the code has additional information regarding accident probabilities, however, then this assumption may be modified.

The factor f_c accounts for the accident conditions. In this report, the

000118

usual manner in which impacts from air concentrations of radioactivity are calculated is to first obtain an airborne concentration (in Ci/m^3) valid during a year, and then multiply it with the pathway dose conversion factor in units of mrem/yr per Ci/m^3. All pathway dose conversion factors used in this report implicitly include the assumption that the individual inhales a volume of 8000 m^3 of air during the year. However, for accident conditions, the assumption that 10^{-6} of the radioactivity in the package is inhaled preempts the use of an average concentration during the year. Consequently, the pathway dose conversion factor must be multiplied by 1/8000 m^3/yr.

These impacts are assumed to be applicable to only a few site workers -- i.e., only those for the immediate vicinity of the working area. These include site laborers and equipment operators.

Unpackaged Waste

Since there is essentially no mechanical driving force, airborne dispersion of unpackaged waste is assumed to take place by natural wind suspension. The approach taken to approximate impacts to individual is to first consider a base condition in which the waste is assumed to approximate fine grained soil. Dust suspended from the waste/soil is assumed to be suspended in a cloud above and in the immediate vicinity of the working area of the HWF. A correction factor is then applied which considers the relative dispersibility of the de minimis waste form.

The equation used to calculate individual impacts can thus be given as follows:

$$H = \sum_n (Q_n/V_{ann})\ EMP\ f_{ds}\ f_s\ PDCF\text{-}1 \qquad (5\text{-}13)$$

with

$$f_s = EDF\ T_{wa} \qquad (5\text{-}14)$$

where all the symbols have been defined previously, EDF is equal to 0.237, and T_{wa} for this scenario is discussed below. T_{wa} is given by:

$$T_{wa} = E\ f_r\ G/\ (u \times p_w) \qquad (5\text{-}9)$$

where E is soil/waste mixture mobilization rate in g/m^2-sec (discussed below), f_r is the fraction of suspended transportable particulates that are respirable (assumed to be unity), u is the wind speed in m/sec, p_w is the density of the waste/soil mixture (assumed to be 1×10^6 g/m^3), and G is the geometry factor given by equation (5-10):

$$G = A/(\text{width of working face} \times \text{mixing height}) \qquad (5\text{-}10)$$

where A, the surface area of the working face, is assumed to be 384 m^2 (see Appendix C), the width of the working face is assumed to be the diameter of a circle with area A (22 m), and the mixing height is assumed to be 3 m.

The mobilization rate E, may be calculated by a number of methods, and may be determined for a specific site assuming that appropriate data is available. Given the mostly generic nature of this study, and also given the uncertainties in the waste composition and the disposal operation, an approximation for the mobilization rate is used based on Appendix A of reference 1. In this reference, the mobilization rate for particles less than 20 um in diameter is approximated based upon an equation derived from uranium mill tailing considerations (Ref. 13):

$$E = 2.x10^{-6}\ (U/U_0)^2[(U/U_0)-1][(U/U_0)^{p/3}-1] \qquad (5\text{-}18)$$

where:

U = sheer velocity
U_0 = threshold velocity for saltation, assumed to be 0.29 m/sec (Ref. 13); and
p = mass percent of particles less than 20 um in aerodynamic diameter, assumed to be 3% (Ref. 13).

The sheer velocity, U, is given by

$$U = \text{windspeed at height } (z)/[2.5x\ln(z/z_0)] \qquad (5\text{-}19)$$

where z_0 is the surface roughness height, 0.01 m, at which the wind speed is equal to zero. Using these equations, site-specific mobilization rates are determined based upon a height z = 1m and upon the average wind speeds for each of the reference sites (i.e., u = 4.61 m/sec, 3.61 m/sec, and 6.67 m/sec, respectively, for the northeast, southeast, and southwest sites). These mobilization rates are given in Table 5-13, as are values for T_{wa}.

TABLE 5-13 . Waste-to-air Transfer Factors for Hazardous Waste Facility

Site Environment	Mobilization Rates (mg/m^2-sec)	Transfer Factors
Northeast	$5.53x10^{-4}$	$6.98x10^{-13}$
Southeast	$1.54x10^{-5}$	$2.48x10^{-14}$
Southwest	$7.95x10^{-3}$	$6.93x10^{-12}$

000120

5.5.3.2 Direct Gamma Radiation from the Working Face

The general equation governing this source of radiation exposure is similar to that given for municipal landfill disposal:

$$H = \sum_n (p_d/p_w)(Q_n/V_{ann})\ EMP\ f_a\ CF\ DF\ EDF\ PDCF\text{-}5 \qquad (5\text{-}15)$$

where all the symbols are as explained before.

The factor EMP is the assumed waste emplacement efficiency of the disposal facility (0.75), and accounts for the dilution of the waste with soil during disposal operations. It is assumed to be the same for both packaged and unpackaged waste. For packaged waste, the waste emplacement efficiency is taken to be 75%, assuming stacked waste disposal (random emplacement of packaged waste does not appear to be reasonable). The waste emplacement efficiency for unpackaged waste is also assumed to be 75% since an 80% waste emplacement efficiency is assumed for the sanitary landfill, and the need to segregate incompatible waste at the HWF would imply a somewhat reduced overall waste emplacement efficiency compared to that at a municipal landfill.

The density of dirt, p_d, is assumed to be a constant (1.6 g/cm^3), while p_w is the density of the waste as disposed (which may be different from the density of the waste in the delivery vehicles). As a rule of thumb, a typical waste density for most hazardous waste is on the order of 1 g/cm^3.

The variable V_{ann} is the total annual volume of waste (both de minimis and non-radioactive waste) disposed in the HWF. This is assumed to be 91,350 m^3/yr for the reference HWF.

The distance factor, DF, and correction factor, CF, are calculated using the approach outlined in Chapter 3.0. DF is calculated for each worker according to the distances listed in Table 5-12. CF is calculated by estimating the area of the exposed waste at the working face, assuming that the exposed area can be modeled as an equivalent disc source, and solving for CF using equation 3-14 and the distances assumed for the proximity factors. The exposed waste areas are estimated in Appendix C to be 171 m^2 (1838 ft^3) for packaged waste and 384 m^2 (4134 ft^2) for unpackaged waste, which result in equivalent disc radii of 7.4 m and 11 m, respectively.

The exposure duration factor, EDF, accounts for the fraction of the year that the worker spends at the site. This is calculated for all personnel exposures as 0.237.

5.5.3.3 Covered Waste

Additional exposures to each worker are assumed to result from direct gamma radiation attenuated through an average of 0.30 m (1.0 ft) of soil

covering the disposed waste. These exposures are assumed to be equally applicable to each worker and are given by the following formula:

$$H = \sum_n (p_d/p_w)(Q_n/V_{ann})\ EMP\ f_a \exp(-\mu_d t)\ EDF\ PDCF\text{-}5 \qquad (5\text{-}16)$$

where p_w is equal to 1 g/cm^3, μ_d is equal to 0.1212 cm^{-1}, and t is equal to 0.30 m. The other factors are the same as those given in Section 5.5.3.2.

5.5.4 Off-site Releases

Calculation of off-site individual and population impacts from operational airborne releases is dependent upon whether the de minimis waste arrives in a packaged or unpackaged form. The approach is basically to use the operational airborne releases addressed in Section 5.5.3 for site personnel impacts as point source terms, and then to apply appropriate airborne transfer factors to determine off-site impacts.

Packaged waste

If the waste is packaged, then operational airborne release is calculated as a puff arising from a very occasional accident involving a waste container. The approach to modelling individual impacts is similar to that in Reference 1 -- i.e.,

$$H = \sum_n C_p\ f_r\ f_{ds}\ V_q\ f_q\ (X/Q)\ EDF\ PDCF\text{-}1 \qquad (5\text{-}20)$$

The factors C_p, f_{ds}, V_q, and f_q are the same as those presented in Section 5.5.3.1 for airborne releases from the working face. f_r is the fraction of the contents of a waste package that is released into the air from the accident, and is assumed to be 0.1% in accordance with the transportation accident assumptions in Section 5.5.3.1. EDF, the exposure duration factor is given by the ratio of the air inhaled in one intake by a person performing light activity (1.25 liters) to the annual inhalation volume (8000 m^3), i.e., $1.25\times10^{-3}/8000 = 1.56\times10^{-7}$ (Ref. 1).

For puff releases, the atmospheric dispersion factor, X/Q, for a ground level release is given in Reference 14 as equation (2) for a person standing in the centerline of the puff. This equation reduces to:

$$(X/Q) = [\pi\sqrt{2\pi}\ \sigma_x\ \sigma_y\ \sigma_z]^{-1} \qquad (5\text{-}21)$$

where σ_x, σ_y, and σ_z are the standard deviation factors for the puff release in three dimensions and where $\sigma_y = \sigma_x$. These factors in units of distance indicate the spread and dilution of the plume as a function of distance from the source.

000122

Given the mostly generic nature of this study, the standard deviation factors are given in a conservative manner. σ_x and σ_y are determined for each of the three sites assuming a one second puff and utilizing the average wind speed for each of the sites. The standard deviation in the vertical direction, σ_z, is obtained from Figure 1 of Reference 14. Assuming a conservative stability Class F for the duration of the accident, σ_z is determined to be about 2.2 m for an individual located at 100 meters from the release. The resultant X/Q values are presented in Table 5-14.

TABLE 5-14 . Accident Atmospheric Dispersion Factors

Region	X/Q (yr/m^3)
Northeast	9.68×10^{-11}
Southeast	1.40×10^{-10}
Southwest	4.11×10^{-11}

Given that an accident of such severity as the above is projected to occur only about once a year, and the fact that the puff release lasts for significantly less than a year, population impacts are not calculated. For individuals located more than a few hundred meters for the site, dispersion and dilution effects would result in only negligible impacts.

Unpackaged Waste

Airborne releases from disposal of unpackaged waste are assumed to occur continuously during site option, and so both off-site individual and population impacts are calculated. Equations used to calculate impacts are:

$$H = \sum_n (Q_n/V_{ann})\ f_{ds}\ f_w\ f_s\ \text{PDCF-3} \qquad (5\text{-}5)$$

$$P = \sum_n (Q_n/V_{ann})\ f_{ds}\ f_w\ \text{POP PDCF-3} \qquad (5\text{-}6)$$

The parameters Q_n, V_{ann}, and f_{ds} are the same as those in Section 5.5.3. The factor f_w is in units of m^3/yr and is given by the following:

$$f_w = \text{EMP ODF } T_{wa}\ u\ w_A\ h \qquad (5\text{-}12)$$

where site specific values for most of these parameters have been presented in Section 5.5.3.1 for unpackaged waste disposal. EMP is equal to

0.75, ODF is equal to 0.237, w_A is equal to 22 m (corresponding to an area equal to 384 m^2), and h is equal to 3 m. The wind speeds, u, for the reference sites are given in Section 5.5.3.1, and T_{wa}, calculated using equation 5-9, is given for each of the 3 reference sites in Table 5-13.

The factor f_s is different for individual and population exposures. For individual exposures, f_s = EDF (X/Q) where EDF = 1/3, and X/Q is given in Section 4.1.5 for ground level releases. For population exposures, f_s = POP as also discussed in Section 4.1.5.

5.5.5 Waste Processing Corrections

Similar to municipal waste disposal (see Section 5.4), processing the de minimis waste through an incinerator will alter the physical and radiological characteristics of the waste. Thus, several of the parameters within the equations used to calculate the radiological impacts from hazardous waste disposal will be modified as listed in Table 5-15.

TABLE 5-15 . Waste Processing Corrections

Parameter		Value
Q_n'		$Q_n(1-f_r)$
f_{ds}	IA=1	1
	IA=2	0.001
f_a		1
ρ_w(g/cm^3)		1.09
V_{res}		0.046 V^a
M_{res}		0.050 M^b

(a) Volume of waste input to the incinerator.
(b) Mass of waste input to the incinerator.

In the above table, f_r is the radionuclide specific activity fraction released during incineration. Values of the f_r for the radionuclides considered in this report are given in Section 4.4.1. After processing, the waste delivered to the hazardous waste disposal facility will consist of an unpackaged residue; the packaged waste impact scenarios discussed in Sections 5.5.3.1 and 5.5.4 would not be applicable.

000124

CHAPTER 5.0 REFERENCES

(1) Oztunali, O. I., et.al., "Data Base for Radioactive Waste Management, Volume 3, Impacts Analyses Methodology Report," USNRC Report NUREG/CR-1759, November 1981.

(2) Personal communication from Ken Shuster, U.S. Environmental Protection Agency, Office of Solid Waste to G.W. Roles, U.S. Nuclear Regulatory Commission, Division of Waste Management, December 1, 1982.

(3) U.S. Environmental Protection Agency, "Solid Waste Facts, A Statistical Handbook," SW-694, October, 1979.

(4) Buckley, D.W., et.al., Science Applications, Inc., "Environmental Assessment of Consumer Products Containing Radioactive Material," USNRC Report NUREG/CR-1775, October, 1980.

(5) Pavoni, J.L., J.E. Heer, Jr., D.J. Hagerty, "Handbook of Solid Waste Disposal, Material and Energy Recovery," Van Nostrand Reinhold, 1975.

(6) U.S. Environmental Protection Agency, "Landfill Disposal of Solid Waste," Federal Register (44 FR 18138), March 26, 1979.

(7) Bond, R.G., C.P. Straub, R. Prober (eds.), Handbook of Environmental Control, Volume II: Solid Waste, Chemical Rubber Company (CRC) Press, 1973.

(8) Brunner, D.R. and D.J. Keller, "Sanitary Landfill Design and Operation," SW-65ts, U.S. Environmental Protection Agency, 1972.

(9) U.S. Nuclear Regulatory Commission, Office of Nuclear Materials Safety and Safeguards, "Draft Environmental Impact Statement on 10 CFR Part 61 : Licensing Requirements for Land Disposal of Radioactive Waste," NUREG-0782, September 1981.

(10) U.S. Environmental Protection Agency, "Compilation of Air Pollutant Emission Factors," Section 11.2, Fugitive Dust Sources, EPA Research Triangle Park, N.C., PB-275 525, August 1977.

(11) U.S. Department of Transportation, "Requirements for Transportation of Radioactive Materials," Federal Register (48 FR 10218), March 10, 1983.

(12) Colton, J.D., et.al., SRI International, "Transport of Low Specific Activity Radioactive Materials," USNRC Report NUREG/CR-2440, December, 1981.

(13) U.S. Nuclear Regulatory Commission, Office of Nuclear Materials Safety and Safeguards, "Final Generic Environmental Statement on Uranium Milling," USNRC Report NUREG-0706, September 1980.

(14) U.S. Nuclear Regulatory Commission, Office of Standards Development, "Methods for Estimating Atmospheric Transport and Dispersion of Gaseous Effluents in Routine Releases From Light-Water Cooled Reactors," Regulatory Guide 1.111, March, 1976.

000126

6.0 POST-DISPOSAL IMPACTS

The previous chapters considered radiological impacts which would result from transporting de minimis waste to a treatment or disposal facility as well as the impacts that could result as part of operating the waste treatment or disposal facility. This chapter addresses the potential radiological impacts that could occur long after the waste has been disposed into the ground. In this chapter, three sets of generic scenarios for human exposure are considered, including:

1. "Intrusion scenarios" involving human intrusion into the waste;
2. "Groundwater scenarios" involving groundwater migration and leachate accumulation; and
3. "Exposed waste scenarios" in which disposed waste is assumed to be brought to the surface and is dispersed by wind or water.

Impacts calculated for the first set of scenarios (the intrusion scenarios) depend upon the concentrations of the radionuclides within the de minimis waste streams considered. Impacts calculated for the last two sets of scenarios depend upon the total radionuclide inventory and waste volume disposed at the disposal site.

A brief overview of the post-disposal exposure scenarios considered in this report is presented in Section 6.1, followed by Sections 6.2 through 6.4, which discuss the calculational procedures for these scenarios in more detail, and address intrusion scenarios, groundwater and leachate accumulation scenarios, and exposed waste scenarios, respectively.

6.1 Overview

As addressed in the following sections, the calculational procedures and assumed parameter values vary for the different exposure scenarios depending upon the following considerations:

- the design and operation of the particular disposal facility;
- the environment in which the disposal facility is located; and
- the waste form and packaging characteristics of the de minimis waste stream.

Five different disposal facilities are considered in this report, and any one may be considered by the user of the computer codes. These include an on-site disposal facility, two disposal facilities for municipal waste, and two disposal facilities for hazardous waste. Parameter values for the on-site disposal facility must be supplied by the user of the code, since the on-site facility may be of any size or configuration. For the other four facilities reference site parameter values are assumed in the computer codes as discussed in the appropriate sections of the report. In addition, three reference disposal site environments are considered in this report, and the user of the code may specify the particular environment to be considered. The scenarios and calculational procedures are discussed in terms of the above considerations.

6.1.1 Intrusion Scenarios

An intruder may unintentionally come across a closed waste disposal site due to a temporary breakdown in institutional controls, and subsequently modify it for a specific purpose, such as housing construction or agriculture. As a result, short- and long-term radiation exposures to the individual can ensue. Two scenarios are considered in which these exposures are calculated.

One of the scenarios (inadvertant intruder-construction) is an acute exposure event. That is, the exposure occurs for a limited period of time (less than a year). The other scenario (inadvertant intruder-agriculture), however, is assumed to be chronic, since it is possible (but unlikely) that the intruder would live for several years at the site before it is discovered that there is a hazard.

Very few individuals are involved in the intrusion scenarios, and the equation generally applicable to these scenarios is:

$$C_a = I\ C_w \tag{6-1}$$

where (C_a) denotes the radionuclide concentration at the biota access location and (C_w) denotes the radionuclide concentration of the waste, both in units of (Ci/m^3), and (I) is the dimensionless interaction factor, which depends on the specific scenario considered. An important point is that C_w is conceptually different but numerically identical with the concentrations used in Chapters 4 and 5. In this chapter, C_w is the average concentration over the entire volume disposed, i.e.:

$$C_w = Q_{tot}/V_{tot} \tag{6-2}$$

where Q_{tot} is the total activity in Ci of radionuclide n in the de minimis waste stream disposed in the disposal facility, and V_{tot} is the entire volume of all waste disposed at the applicable facility. If it is assumed that the de minimis waste is delivered to the disposal facility in equal volumes over the lifetime of the disposal facility, then C_w is equal to Q_n/V_{ann}.

The interaction factor (I) can generally be expressed through the following equation:

$$I = f_o\ f_d\ f_w\ f_s \tag{6-3}$$

where all the parameters are dimensionless, and where

000128

f_o = time-delay factor;
f_d = site design and operation factor;
f_w = waste form and package factor; and
f_s = site selection factor.

The time-delay factor (f_o) is expressed as an exponential radionuclide decay factor and incorporates the effects of the time delay between the time that the waste is disposed and the time that intrusion occurs. This factor is a property of the scenario and the disposal technology being considered. For the two intrusion scenarios, it is given by the formula:

$$f_o = \exp[- \lambda \text{ IINS}] \qquad (6\text{-}4)$$

where λ is the radionuclide decay constant in units of year^{-1}, and IINS is the period (in years) between the cessation of disposal operations and the end of active institutional control period. (The IINS value used in the calculations is specified by the user of the computer code). Note that this equation ignores the radioactive decay that would occur during operation of the disposal facility. This practice is conservative, but accounts for the possibility that the inadvertent intruder initiates the scenario at a location containing waste from the last year of disposal facility operation.

The site design and operation factor (f_d) expresses the fraction of the waste that is available to the transfer agent. It usually depends on the efficiency of the disposal design.

The waste form and package factor (f_w) expresses the resistance of the waste to mobilization by the specific transfer agent initiating the scenario. For example, this factor would be considerably less than unity for waste streams solidified in a matrix and/or packaged in containers that are likely to retain their integrity at the time of inadvertant intrusion. This factor is a property of the waste stream as it is being disposed.

The site selection factor (f_s) depends on many parameters, and generally expresses the influence of the disposal site environment on waste release and transfer. For example, for the inadvertant intruder-construction scenario, it is proportional to the transfer factor between contaminated soil and contaminated air. In some cases, however, it is also proportional to the fraction of a year that the human exposure scenario takes place. Since the pathway dose conversion factors presented in Appendix D have been calculated for a full year exposure period, the site selection factor must compensate for this calculational convenience.

A brief description of the two intrusion scenarios is presented below. Specific values of the transfer factors used to calculate impacts are discussed later in this chapter.

Intruder - Construction Scenario

An inadvertant intruder may choose to excavate or construct a building on a disposal site. Under these circumstances, dust will be generated from the application of mechanical forces to the surface materials (soil, rock) through tools and implements (wheels, blades) that pulverize and abrade these materials. The dust particles generated are entrained by localized turbulent air currents. These suspended particles can thus become available for inhalation by the intruder. The intruder may also be exposed to direct gamma radiation resulting from airborne particulates and by working directly in the waste/soil mixture. For convenience, this scenario is called the intruder-construction scenario, and appropriate values applicable to typical construction activities are used.

Intruder - Agriculture Scenario

In this scenario, an inadvertant intruder is assumed to occupy a dwelling located on the disposal facility and ingest food grown in contaminated soil. Garden crops may be subject to radionuclide contamination as a result of direct foliar deposition of fallout particulates. Garden crops may also uptake radionuclides via soil-to-root transfer from contaminated soil. The soil may be initially contaminated, or it may become contaminated as a result of deposition. The inadvertant intruder may also be exposed to direct ionizing radiation such as beta and gamma radiation from the naturally suspended radioactivity and from the waste/soil mixture. He may also inhale contaminated air particulates. (See Appendix D for the uptake pathways considered.) This scenario is called the intruder-agriculture scenario.

6.1.2 Total Activity Scenarios

This section considers the scenarios that are dependent upon the entire activity disposed at the site. All of the total activity scenarios are chronic exposure scenarios (i.e., continuous release and exposure). The equation applicable to the total activity scenarios for each radionuclide is:

$$C_a = \sum_i I_{in} C_{in} \qquad (6\text{-}5)$$

where (C_a) and (C_{in}) denote the concentrations of radionuclide (n) at the biota access location and in the $(i)^{th}$ de minimis waste stream, respectively, in units of (Ci/m^3), and (I_{in}) is the radionuclide-specific interaction factor between the $(i)^{th}$ waste stream and the biota access location. The capital sigma indicates that the total radionuclide concentration at the biota access location is a summation of the radioactivity contributed by each waste stream. This summation may also include any potential integration that must be performed due to the areal extent of the disposal site and the areal distribution of the waste streams. The interaction factor I_i (dropping the radionuclide subscript for simplicity) can generally be expressed through the following equation:

000130

$$I_i = f_o \, f_{di} \, f_{wi} \, f_{si} \qquad (6\text{-}6)$$

where the subscript i denotes the waste stream, and where:

f_o = time-delay factor (dimensionless);
f_{di} = site design and operation factor (dimensionless);
f_{wi} = waste form and package factor (m^3/yr); and
f_{si} = site selection factor (yr/m^3);

and where the values of f_{di}, f_{wi}, and f_{si} may be functions of the properties of individual waste streams.

Groundwater Scenarios

There are several groundwater scenarios depending on the assumed biota access location. One of the access locations is an on-site well which may be drilled into an unconfined aquifer beneath the site and used by a potential inadvertant intruder (intruder-well scenario). A second location is a well drilled into the unconfined aquifer and pumped for common use by a small population some distance away from the disposal facility (population-well scenario). The third location is a stream that receives the discharge from the unconfined aquifer and which may be used by a larger population (population-surface water scenario).

In this report, it is assumed that the water table gradient underneath the disposal site is unidirectional, and that the intruder-well located at the boundary of the disposal area (rather than the boundary of the site) contributes to the intruder scenario. This location is more conservative than a well located in the middle of the site since only about half of the potential effluent from the site would contribute to the contamination at a well in the middle of the site whereas all of the potential effluent would contribute to the location assumed for the intruder-well.

The factors f_{di} and f_{wi} are assumed to be independent of the areal extent of the disposal facility; however, the factor f_{si} represents these areal relationships. The factors f_{di} and f_{wi} and their computations are straightforward and representative values for these factors are given in Section 6.3. However, a brief discussion of f_{si} is presented below.

The following general equation is applicable to determine f_{si} (Ref. 3).

$$f_{si} = r_g \, r_{ti} \, / \, Q \qquad (6\text{-}7)$$

where:

r_g = dimensionless time independent reduction factor due to the transverse (perpendicular to the groundwater velocity direction) spatial relationship of the disposal facility with the discharge location;

r_{ti}= dimensionless reduction factor due to migration and radioactive decay; this factor is dependent on both space and time including the longitudinal (in the direction of the groundwater velocity) spatial relationship of the disposal facility with the discharge location; and

Q = dilution factor in units of volume/time.

The factor Q is independent of the characteristics of the disposed wastes and is also independent of the geometrical relationship of the disposal facility with the discharge location. The factor Q may be the pumping rate of a well or the flow rate of a river. The factors r_g and r_{ti} are discussed in Section 6.3.

Other scenarios conceptually associated with the groundwater scenarios involve disposal cell leachate accumulation and overflow. These scenarios are discussed in Section 6.3.3.

Exposed Waste Scenarios

In these scenarios, part or all of the surface area of the disposed waste is assumed to be exposed through some means, and this exposed waste is assumed to be accessed by transfer agents such as wind or water. The mechanism that initiates uncovering of the waste may be anthropogenic activities such as construction or farming, or it may be erosion of the waste cover by surface water or wind action. Initiating mechanisms related to human activities are examined in Section 6.2 addressing the intruder-agriculture and intruder-construction scenarios, and initiating mechanisms related to erosion of the waste cover are examined in other references (Refs. 3,4).

There are two basic types of exposed waste scenarios depending on whether the transfer agent is wind or surface water. For the wind transport scenario, only population exposures are considered; individual exposures are bounded by the above intruder-construction and intruder-agriculture scenarios. The entire exposed waste area is assumed to be a point source for the impact calculations since the population is assumed to be comparatively distant. For the surface water transport scenarios, exposures to individuals consuming water from an open water access location are considered. Again the disposal facility is considered a point source for this scenario. The equations used in the calculations are examined in Section 6.4.

6.2 Intruder Scenarios

As discussed in Section 6.1, potential long-term exposure scenarios from de minimis waste disposal can be separated into two types: intruder scenarios and total activity scenarios. The intruder scenarios include those involving direct human contact with the disposed waste, such as those involving exposures to a potential inadvertent intruder. In these

000132

scenarios, potential exposures are calculated considering only the radionuclide concentrations in the waste streams assumed to be actually contacted by the intruder. The radionuclide concentrations in parts of the disposal facility not contacted by the potential inadvertent intruder do not enter into the calculations. On the other hand, exposures from the total activity scenarios are determined by considering the total radionuclide activity disposed at the facility. Examples of total activity scenarios include the groundwater migration scenarios and the exposed waste scenarios.

These concepts are further expanded in the following two sections which present the calculational procedures for determining exposures from the two basic intruder scenarios considered in this report. These include the intruder-construction scenario presented in Section 6.2.1 and the intruder-agriculture scenario presented in Section 6.2.2.

6.2.1 Intruder-Construction Scenario

This scenario assumes that at some time after the end of operations at the disposal facility, institutional controls breakdown temporarily and an intruder inadvertantly constructs a house on the disposal facility. In so doing, the intruder is assumed to contact the disposed wastes while performing typical excavation work such as installing utilities, putting in basements, and so forth. These typical activities should not be expected to involve significant depths - e.g., in most cases no more than approximately 3 m (about 10 ft). There is, however, a much less likely chance that some excavations could proceed at a lower depth. This could occur, for example, through construction of a sub-basement for a high rise building.

To implement this scenario, the inadvertent intruder is assumed to dig a 3 meter deep foundation hole for the house. The surface area of the house is assumed to be 20 m by 10 m (200 m^2), which is a typical surface area for a reasonably large ranch-style house. The foundation hole is assumed to be 20 m by 10 m (200 m^2) at the bottom and 26 m by 16 m at the top (giving a 1:1 slope for the sides of the hole). This results in a total volume (see Figure 6.1) of excavated material equal to 906 m^3, of which a portion will be composed of the cover that was emplaced over the waste during disposal operations, a portion will be composed of waste, and the remainder will be composed of soil mixed with the waste during disposal operations.

For municipal and hazardous waste disposal, the size of the disposal cells is assumed to greatly exceed the size of the intruder excavation. The fraction of the excavated waste/soil mixture that actually consists of waste is therefore given by the product of the waste emplacement efficiency (EMP) with the cover mixing efficiency. The waste emplacement efficiency is the fraction of the volume within a given disposal cell (excluding the cover) which consists of waste. The cover mixing efficiency (RMIX) can be calculated for various cover thicknesses using Figure 6.1, and is the fraction of the total volume of excavated material (906 m^3) that consists of the disposed soil/waste mixture. For a 2 m

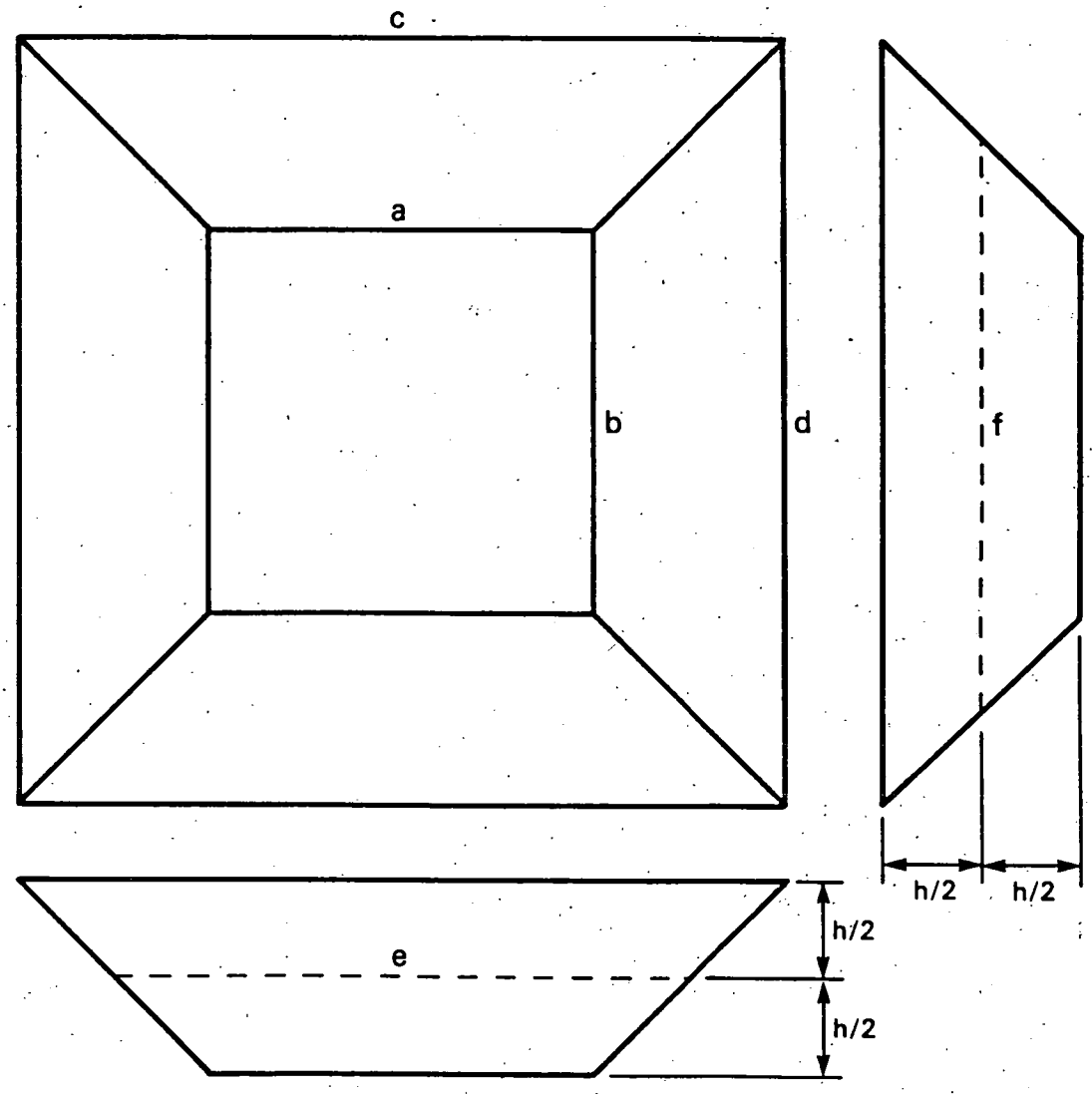

$$\text{Volume} = \frac{h}{6}(ab + cd + 4ef)$$

Figure 6.1 Foundation Volume Calculations

000134

cover, about 75% of the excavated mixture would consist of the cover, which results in a cover mixing efficiency equal to 1.0 - 0.75 = 0.25. A 1 m thick cover is assumed for municipal waste disposal into a sanitary landfill (RMIX = 0.59), a 0.3 m thick cover is assumed for the open dump (RMIX = 0.87), while a 1.5 m thick cover is assumed for the hazardous waste disposal facility (RMIX = 0.41).

For on-site disposal, there will be more information about the specific configuration of the disposal facility. In addition, it is possible that disposal could be carried out as a series of widely separated auger holes, such as could have been the case for disposal of waste under former Section 20.304 of 10 CFR Part 20. For on-site disposal, therefore, the surface utilization efficiency (SEFF) is included when determining the fraction of the excavated soil/waste mixture that actually consists of waste. SEFF is provided by the user of the code and is defined as the surface area of the disposal cells divided by the surface area of the disposal cells plus any space between the disposal cells. SEFF is therefore a fraction less than or equal to unity.

The equation describing human exposure for the intruder-construction scenario is as follows (Ref. 3):

$$H = \sum_{n} [(f_o f_d f_w f_s)_{air} C_w \text{ PDCF-2} + (f_o f_d f_w f_s)_{DG} C_w \text{ PDCF-5}] \quad (6\text{-}8)$$

where H is the 50-year dose committment in mrem, PDCF-2 and PDCF-5 are the radionuclide-specific pathway dose conversion factors which are discussed and presented in Appendix D, C_w is the radionuclide concentration in the waste (equation 6-2), and n denotes summation over all the radionuclides.

The first term of the equation calculates impacts from air pathways resulting from suspension of contaminated dust into the air. These impacts include inhalation of the contaminated dust and direct radiation exposure from immersion in the contaminated dust cloud. The second term of the equation calculates the impacts from direct gamma radiation emitted by the excavated wastes. The transfer factors are examined below.

The time delay factor (f_o) is radionuclide-specific and is given by the following equation:

$$f_o = \exp [- \lambda \text{ IINS}] \quad (6\text{-}9)$$

where λ is the decay constant of the radionuclide, and IINS is the time period between the end of active disposal operations and the initiation of the scenario. This factor is the same for both the air uptake pathways and the direct gamma pathway. The assumed time period is equivalent to the assumption that the intrusion scenario involves the waste last disposed at the site and conservatively neglects the possibility that the intrusion

scenario may involve waste disposed earlier during the disposal facility operation.

The site design and operation factor, f_d, denotes the dilution of the waste due to particular disposal practices regarding waste emplacement. For municipal and hazardous waste disposal, f_d is given by the waste emplacement efficiency (EMP), which is assumed to be 0.8 for municipal waste disposal and 0.75 for hazardous waste disposal. For on-site disposal, f_d is given as the product of EMP and the surface utilization efficiency SEFF, and both parameters must be provided by the code user. The cover mixing efficiency is not considered for this scenario since the intruder may possibly spend most of his time within the excavation.

For the air uptake pathways, the waste form and package factor (f_w) is given by the following formula:

$$f_w = 10^{(1-IA)} \tag{6-10}$$

where IA is the accessibility index (see Section 2.2.4). Based on this formula, f_w ranges from a high of 1 to a low of 0.1.

For the direct radiation exposure pathway, only the self-shielding of the particular waste form affects the factor f_w. In this case, f_w is set equal to the accessibility multiplier. The modification due to accessibility results from the substantial metal component of some waste streams (see Section 2.2.4). The accessibility multiplier is taken equal to 1 if the index IA is equal to 1, and it is 0.1 if the index IA is equal to 2.

The site selection factor, f_s is different for the air uptake and direct gamma pathways. For the air uptake pathways, it is the product of the soil-to-air transfer factor T_{sa} (which depends on the environmental characteristics of the region in which the disposal facility is located) with the exposure duration factor (the fraction of a year that construction takes place). For the direct gamma exposure pathway it is equal to just the exposure duration factor. These factors are detailed below.

In this work, the exposure duration is assumed to be 500 working hours. This is equivalent to a construction period of 3 months, which is believed to be reasonably conservative for typical construction. It is believed to be very conservative for activities involving use of heavy construction equipment. This gives a value of 0.057 for f_s for the direct gamma scenario, and is applicable for municipal waste disposal, hazardous waste disposal, and on-site disposal.

For the air pathways, the value 0.057 is multiplied with a soil-to-air transfer factor given by the formula:

$$T_{sa} = [T_{sa}]_o \times (10/v) \times (s/30) \times (50/PE)^2 \tag{6-11}$$

000136

where $[T_{sa}]_o$ is equal to 2.53×10^{-10}, v is the average wind speed at the site in m/sec, s is the silt content of the site soils in percent, and PE is the precipitation-evaporation index of the site vicinity indicative of the antecedent moisture conditions (see Reference 1). Parameter values for v, s, and PE are given for each reference site in Section C.5 of Appendix C. For the southeast site, for example, values of v = 3.61 m/sec, s = 50, and PE = 91 result in a T_{sa} value equal to 3.53×10^{-10}. Multiplying T_{sa} by the density of the soil, which is assumed to be 1.6 gm/cm^3, gives the average airborne dust loading for the construction activity, while multiplying T_{sa} by 0.057 gives the site selection factor. The resulting airborne dust loading and site selection factor for each of the three reference sites are given in Table 6-1. These values are applicable for municipal waste disposal, hazardous waste disposal and on-site disposal.

TABLE 6-1 . Reference Dust Loadings and Site Selection Factors

Site Environment	Dust Loading (mg/m^3)	f_s
Northeast	0.258	9.18×10^{-12}
Southeast	0.565	2.01×10^{-11}
Southwest	7.410	2.64×10^{-10}

6.2.2 Intruder-Agriculture Scenario

It is assumed in this scenario that an intruder lives in the building constructed as part of the intruder-construction scenario, and consumes food grown in soil contaminated by the decomposed waste excavated and distributed around the building during construction activities. It is believed that this follow-on scenario to the above intruder-construction scenario is more reasonable than a possible scenario involving a large scale farming operation. Farming is a surface activity and generally does not involve disturbing the soil for more than a few feet. As long as a cap of one or two meters is maintained over the waste, then it is very unlikely that agricultural activities would ever contact the waste.

To implement the scenario at the end of active institutional control period, however, a portion of the soil and waste (including the earthen cover) excavated during the intruder-construction activity is assumed to be distributed around the completed house. After building the foundations of the house, about 306 m^3 of this material would be put back in outside and around the cellar walls leaving a volume of about 600 m^3 of material which is distributed around the site property. The precise areal extent to which this material is distributed is somewhat speculative. It is likely, however, that the material will remain localized; moving even a few cubic yards of soil more than 10 meters usually requires significant effort. It is assumed in this report that this areal extent is likely to be somewhere between 1000 m^2 and 2000 m^2. That is, the waste/soil mixture is assumed to lie within a radius of 25 meters from the house.

The intruder is then assumed to live in the building constructed in this distributed waste/soil mixture, work at a regular job during the day, and spend some of his extra time working in a garden growing food for his own consumption. His time during a year is assumed to be allocated between various activities as follows:

Activity	Hours/Year
At Home	4380
At Work	2000
Traveling To/From Work	250
Vacation	330
Gardening	100
Outdoors	1700

In the intruder-agriculture scenario, the inadvertent intruder could be exposed principally by five pathways: (1) inhalation of contaminated dust suspended due to tilling activities as well as natural suspension, (2) direct radiation exposure from standing in the contaminated cloud, (3) consumption of food (e.g., leafy vegetables) dusted by fallout from the contaminated cloud, (4) consumption of food grown in the contaminated soil, as well as products from animals fed contaminated forage, and (5) direct radiation exposure from the disposed waste volume. For calculational convenience, the first three uptake pathways have been grouped together and denoted as the air uptake pathway. The potential exposures from these pathways are therefore calculated in three groups: air uptake, food (soil) uptake, and direct radiation (volume) exposures. These are then added to arrive at the total potential exposures from this scenario.

The potential exposures from the intruder-agriculture scenario are calculated using the following equation:

$$H = \sum_n [(f_o f_d f_w f_s)_{air} C_w \text{ PDCF-3} + (f_o f_d f_w f_s)_{food} C_w \text{ PDCF-4}] + \sum_n (f_o f_d f_w f_s)_{DG} C_w \text{ PDCF-5} \qquad (6\text{-}12)$$

where H is the annual dose rate in mrem per year during the 50th year of exposure, PDCF-3, PDCF-4, and PDCF-5 are the radionuclide specific pathway dose conversion factors presented in Appendix D, C_w is the radionuclide concentration in the waste (see Equation 6-2), and n denotes summation over all the radionuclides. The values of the transfer factors are presented below.

The time delay factor (f_o) for this scenario is identical with that for the intruder-construction scenario, and is given by equation (6-8). The site design and operation factor (f_d) is determined in a similar manner as that for the intruder-construction scenario and is the same for all three

000138

of the above pathways. In addition, however, f_d includes the dilution resulting from mixing the excavated soil/waste with the excavated cover soil. For sanitary landfill disposal, a 1 m cover over the waste is assumed, which results in cover mixing efficiency equal to 0.59. This results in a site design and operation factor for sanitary landfill disposal equal to 0.8 x 0.59 = 0.47, 0.75 x 0.41 = 0.31 for hazardous waste disposal, and 0.8 x 0.87 = 0.70 for open dump disposal. For on-site disposal, the cover mixing efficiency (RMIX) is multiplied by both the waste emplacement efficiency and the surface utilization efficiency. All three parameters are specified by the code user.

Waste Form and Package Factor

The waste form and package factors for the air uptake and direct radiation exposure pathways composing this scenario are identical with those for the air uptake and direct radiation exposure pathways composing the intruder-construction scenario. However, for the food (soil) uptake pathway, other considerations are applicable. The following formula is utilized to calculate (f_w) for the food (soil) uptake pathway:

$$f_w = M_o \, t_c \, 10^{(1-IA)} \qquad (6\text{-}13)$$

where, IA is the accessibility index (see Section 2.2.4), and M_o is the radionuclide-specific leach fractions of unsolidified waste forms (see Section 6.3.1).

The contact time fraction t_c is the fraction of time in one year that the waste is in contact with water. It appears to be reasonable to assume that only the fraction of radionuclides transferred from the waste to the interstitial water will be accessible to the roots, and inclusion of contact time in the above equation is consistent with this assumption. The contact time fraction is conservatively assumed to equal unity in this work, however, given uncertainties regarding the extent of time that the garden is watered.

Site Selection Factor

The site selection factor (f_s) for the various pathways are the same for municipal waste disposal, hazardous waste disposal, and on-site disposal.

The site selection factor for the air uptake pathway is similar to the intruder-construction air uptake pathway. However, the soil-to-air transfer factor must be averaged to account for natural resuspension of the soils for part of a year. This estimate is calculated by assuming that (1) the airborne dust loading for the intruder-construction scenario (see Section 6.2.1) is applicable during gardening (100 hours); (2) during the time spent outdoors (1700 hours), a typical natural outdoor ambient air particulate concentration of 0.1 mg/m^3 is assumed (Ref. 4); and (3) during the time spent indoors (4380 hours), a typical ambient indoor

concentration of 0.05 mg/m^3 is assumed (Ref. 4). Time-averaging these values results in site selection factor values given in Table 6-2.

TABLE 6-2 . Reference Site Selection Factors for the Intruder-Agriculture Scenario

Site Environment	Site Selection Factor
Northeast	2.96×10^{-11}
Southeast	3.18×10^{-11}
Southwest	8.06×10^{-11}

For the food (soil) uptake pathway, f_s is assumed to be the fraction of food consumed by the individual that is grown on site, 0.5.

For the direct radiation exposure pathway, f_s is equal to the exposure duration fraction multiplied by a correction factor to account for the limited areal extent of the direct radiation source that the intruder is exposed to. Moreover, the fraction of the time the intruder spends in relation to the source must be considered.

During a year, the intruder is assumed to spend 1800 hours outdoors exposed to unattenuated radiation (100 hours tilling and 1700 hours around the house). During the 4380 hours he spends indoors, he is exposed to attenuated radiation. The correction factor due to the limited areal extent of the radiation source may be estimated utilizing Figure 6.2.

This figure shows that intruder may be assumed to be exposed to a full disk source while outside the house, and an annular source while inside the house. While he is inside the house, the center of the disk represents the shielding provided by the foundation slab. The contribution to the direct radiation exposure from this center portion may be neglected in comparison with the exposure from the outside of the house. If the foundation slab is a one-foot thick concrete layer, the radiation would be attenuated to about 0.03 of its unshielded value for Cs-137 gamma rays (Ref. 5). The correction factor for the areal extent of the annular source may be represented by the following equation:

$$CF = [E_1(\mu r_1) - E_1(\mu r_2)] / E_1(\mu r_0) \qquad (6\text{-}14)$$

where CF is the dimensionless correction factor, $E_1(x)$ is the first order exponential integral, μ is the linear attenuation coefficient of air in units of m^{-1} (it is taken to be 0.0097 m^{-1} in this report) (Ref. 5), and the r's are the distances from the exposure point indicated in Figure 6.2 in meters.

000140

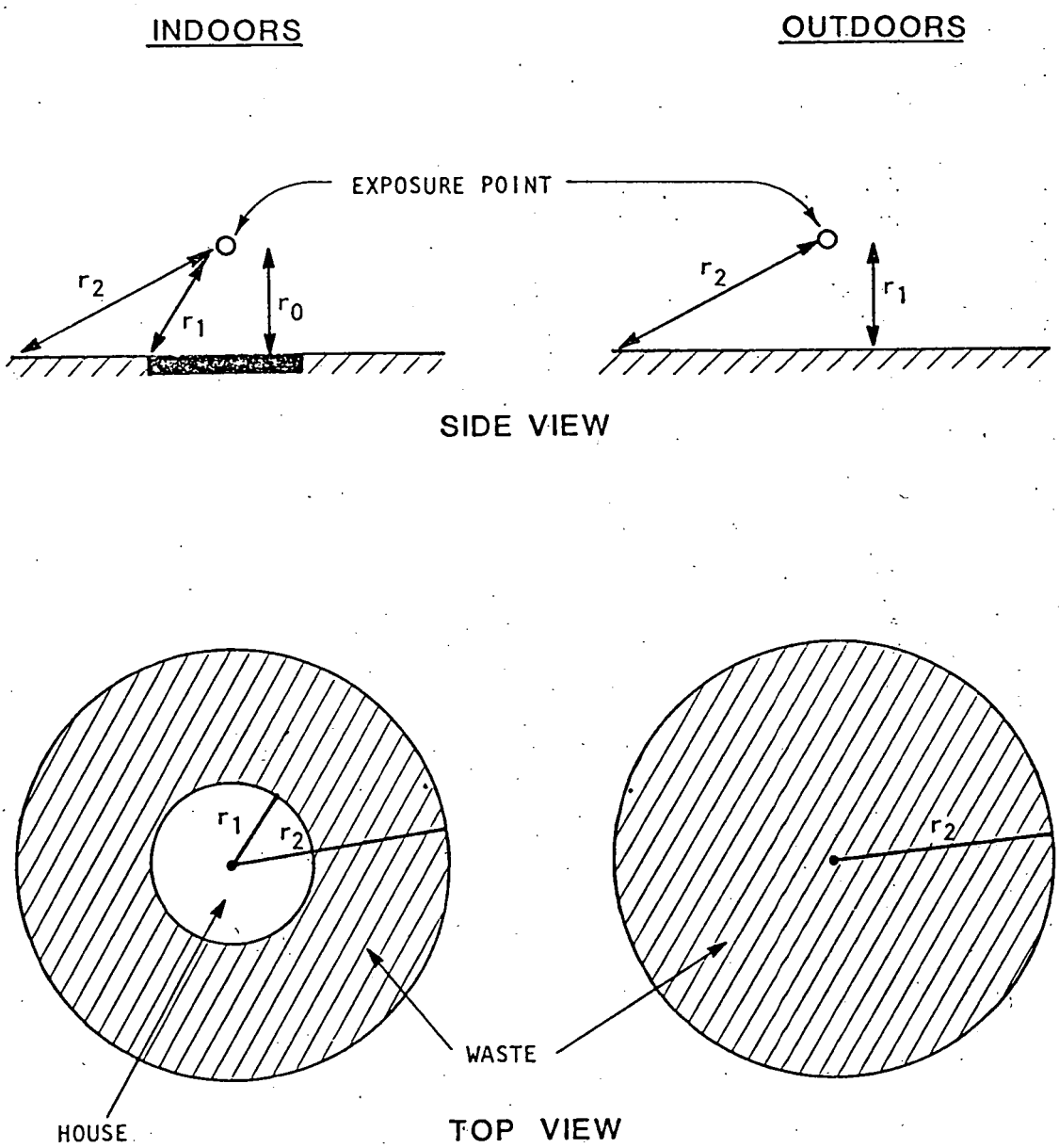

DIRECT RADIATION EXPOSURE GEOMETRY

FIGURE 6.2

In order to evaluate the correction factor, these radial distances must be assumed. The value of the exponential integral for some representative distances are given in Table 6-3.

TABLE 6-3 . Exponential Integral Values

Distance	μr	$E_1(\mu r)$
1 m	0.0097	4.068
8 m	0.0776	2.055
20 m	0.1940	1.248
25 m	0.2425	1.068

For an annular source (the time spent indoors), it is reasonable to assume 1 m and 8 m, respectively, for r_0 and r_1; 1 m represents the effective height of the exposed person, and 8 m represents the approximate radius of a 200 m^2 house floor. The value assigned to r_2, however, depends on the areal extent to which waste/soil mixture (600 m^3) has been spread. This mixture will likely be spread unevenly within about a half acre around the house excavation, and the areal extent is likely to be between 1000 m^2 and 2000 m^2. A radius of the above 20 m represents an area of about 1050 m^2 over which the waste is spread, while a radius of 25 m represents an area of about 1750 m^2. A radius of 25 m is utilized in this work.

For a full disc source (the time spent outdoors), r_2 is again assumed to be 25 m. However, the radius r_1 in equation 6-14 is replaced by r_0 --i.e., $r_1 = r_0 = 1$ m.

These assumptions yield a correction factor for the time spent outdoors of about 0.74, and a correction factor for the time spent indoors of about 0.24. Utilizing values of 1800 hours outdoors and 4380 hours indoors yields an site selection factor of about 0.27, which is the value utilized in this report for direct radiation exposure.

Radon Ingrowth

Some de minimis waste streams may contain small to moderate quantities of precursors of radon-222, in which case ingrowth of radon gas within buildings must be considered as part of the intruder-agriculture scenario. Equations to calculate impacts may be obtained from References 6 and 7. Assuming steady state conditions, the approach is to first calculate the radon flux from soil from a given concentration of radium-226 within the soil. Next, assuming that the structure built by the inadvertent intruder has concrete floors, the diffusion of radon gas through the concrete floor and into the structure is calculated. Then, assuming that at equilibrium the rate of radon gas diffusing into the building is equaled by the rate of radon gas lost by decay and other means, the average concentration of

000142

radon-222 within the building is calculated. Finally, this average concentration is multiplied by a factor which represents an individual's average yearly occupancy of the structure, and by an appropriate pathway dose conversion factor to determine individual impacts in mrem/yr.

The radon emanation rate from soil is given as follows (Ref. 6):

$$J_o = \sum_i C_{wi} E_m \sqrt{\lambda D_s} \qquad (6\text{-}15)$$

where

J_o = radon surface flux from soil (Ci/m^2-sec);
C_{wi} = radium-226 concentration in soil (Ci/m^3) from i^{th} de minimis waste stream;
E_m = emanation coefficient (assumed to be 0.2 - Ref. 6);
λ = radon-222 decay constant (2.1×10^{-6} sec^{-1}); and
D_s = effective diffusion coefficient through soil (assumed to be 2.2×10^{-6} m^2/sec - Ref. 6).

C_{wi} is calculated using equation (6-2). In addition, the radium-226 generated through the decay of thorium-230 is added to the decayed radium-226 initially present in the de minimis waste. Higher order precursors are not considered because there is not sufficient time for their decay. The radon flux through a concrete floor with thickness t, J (in units of Ci/m^2-sec), and the radon-222 gas concentration within the building, C (in units of Ci/m^3), are given by (Ref. 7):

$$J = J_o \exp\left[-t\sqrt{\lambda/D_e}\right] \qquad (6\text{-}16)$$

and

$$C = J\,A\,/(V\,\lambda_e) \qquad (6\text{-}17)$$

where

J_o = radon flux calculated in equation 6-15;
λ = radon-222 decay constant;
D_e = effective radon diffusion coefficient for concrete (assumed to be 6×10^{-9} m^2/sec - Ref. 7); and
t = thickness of concrete (assumed to be 0.305 m - 1 ft)
A = surface area of the concrete floor (m^2);
V = volume into which the radon flux enters (m^3); and
λ_e = effective loss constant (decay plus removal) (assumed to be 1 hr^{-1} - Ref. 7).

Assuming as before a reasonably large ranch-style house, A is assumed to be 200 m^2. Assuming 8 foot high walls in the building, V is calculated to be about 500 m^3.

After calculating the average radon gas concentration (C) within the building, annual impacts are determined as:

$$H = \sum_{n} C \text{ EDF PDCF-3} \qquad (6\text{-}18)$$

where H is in mrem/yr and C is as discussed above. The exposure duration factor, EDF, is obtained from the assumed activity distribution presented at the beginning of this section for the individual intruder (i.e., EDF = 4380/8760 = 0.5). PDCF-3 is the appropriate pathway dose conversion factor for radon-222. Impacts are summed over all waste streams containing radium-226 at the time that the intruder scenario is initiated, and added to the other impacts calculated for the intruder-agriculture scenario.

6.3 Groundwater Scenarios

These scenarios calculate the potential impacts resulting from groundwater migration of radionuclides from the disposed wastes to three biota access locations downstream in the direction of the groundwater flow: (1) a well located at the boundary of the disposal area, (2) a well located between the disposal facility and the surface hydrologic boundary, and (3) a stream located at the surface hydrologic boundary. Different pathway dose conversion factors are used depending on whether the access location is a well or a stream (see Appendix D). An idealized map showing the geometric relationships between the disposal facility and the biota access locations is shown as Figure 6.3.

As shown in this figure, the main streamline passing underneath the disposal facility has been straightened out (the longitudinal coordinates are measured along this streamline). The overall area of the disposal facility, which influences the migration calculations, varies depending upon the particular facility considered. For municipal waste disposal (either a sanitary landfill or an open dump), the disposal area covers approximately 300 m by 340 m, while for hazardous waste disposal, the disposal area covers approximately 665 m by 910 m. For on-site disposal, the disposal area dimensions (e.g., length and width corresponding to the above 300 m and 340 m) are specified by the user of the code. It may also be observed that the disposal area in Figure 6.3 has been divided into 10 sectors. In the calculation, the total radionuclide quantity disposed in the disposal site is divided by 10, and the resultant tenth is assumed to be released as a point source into each sector. The total impacts from migration from each point source are summed. The following equation is used to calculate human exposures which may result from the well access groundwater scenarios:

$$H = \sum_{i} \sum_{n} f_o f_{di} f_{wi} f_{si} C_{in} \text{ PDCF-6} \qquad (6\text{-}19)$$

000144

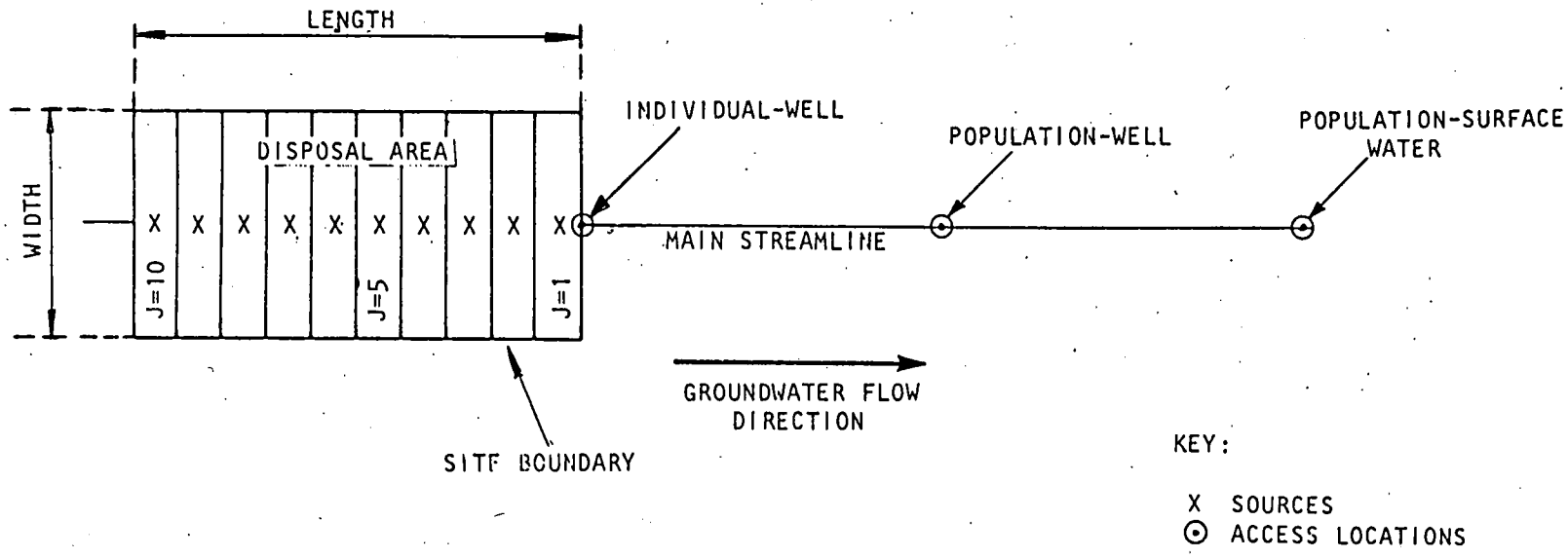

GEOMETRIC RELATIONSHIPS
OF DISPOSAL AREA AND DISCHARGE LOCATIONS

FIGURE 6.3

000145

6400

where H is the annual dose rate in mrem per year during the 50th year of exposure, PDCF-6 is the radionuclide-specific pathway dose conversion factor discussed and presented in Appendix D, C_{in} is the concentration of the radionuclide in the de minimis waste stream considered, i denotes summation over all the de minimis waste streams, and n denotes summation over all the radionuclides. (Note the difference between the concentration C_{in} and the concentration C_w considered in the intrusion scenarios.) For a surface water access location the dose conversion factor PDCF-7 is substituted instead of PDCF-6. The values of the transfer factors are presented below.

The time delay factor f_0 and the site design and operation factor f_{di} are assumed to be unity. This merely means that the groundwater migration scenario is assumed to be initated at the close of the operational period and that the influence on the calculations resulting from design of the disposal facility is considered as part of the waste form and package factor and the site selection factor.

It is also important to recognize that due to certain aspects of the disposal facilities and site environments considered in this report, some judgement is required by the code user in interpreting results of ground water migration calculations. The ground water migration calculations depend upon an assumption that the rate of water percolating through the disposal cell covers is less than the rate of water infiltrating out the bottom of the disposal cells. If not, then the percolating water can accumulate within the disposal cells as leachate. This can happen, for example, at a disposal facility located at a humid site having very impermeable soils (or an impermeable liner), and the permeability of the disposal cell covers exceeds that of the soil (or liner). In this case impacts associated with this leachate accumulation would be more appropriate to consider than those associated with ground water migration. These leachate accumulation impacts are addressed in Section 6.3.3.

6.3.1 Source Term

The source term is represented by the waste form and package factor f_{wi}, which has units of m^3/year, and which denotes the annual volume of contaminated liquid that passes into the aquifer beneath the disposal facility. This factor is given by the formula:

$$f_{wi} = f_i \, V_w \, f_c, \qquad (6\text{-}20)$$

where f_i is the fraction of the total disposed waste volume (de minimis plus non-radioactive waste) that comprises the $(i)^{th}$ de minimis waste stream; V_w is the annual volume of water that percolates through the disposal facility cover and contacts the disposed waste/soil mixture; and f_c is the fraction of the waste radionuclide concentration transferred to the leachate.

000146

The first factor f_i is self-evident; it is the ratio of the volume of the de minimis waste stream being considered to the entire volume of waste disposed. Clearly, the variable (V_w) is simply the percolating infiltration (p) multiplied by the effective disposal site surface area (S_f), which is the surface area of the disposal cells. (The space between the disposal cells, if any, is not included). The effective disposal site surface area is given as follows:

$$S_f = V_{tot} / (EMP \times EFF) \qquad (6\text{-}21)$$

where

V_{tot} = total volume of waste (de minimis and other waste) disposed at the site, in m^3;

EMP = waste emplacement efficiency (dimensionless) which is defined to be volume of waste emplaced in the disposal cells divided by the total volume of available disposal space; and

EFF = volumetric disposal efficiency (in m) which is defined to be the volume of available disposal space in a disposal cell divided by the surface area of the disposal cell.

In the above equation, all three parameters are supplied by the user for on-site disposal. For municipal (sanitary landfill and open dump) and hazardous waste disposal V_{tot} is the average annual waste volume times the operating life, which is assumed to be 20 years. Reference parameters for municipal and hazardous waste disposal facilities are shown in Table 6-4.

TABLE 6-4 . Reference Disposal Parameters

Parameter	Municipal Waste Facility	Hazardous Waste Facility
V_{tot} (m^3)	592,000	1,827,000
EMP	0.8	0.75
EFF (m)	7.31	4.37

There may be several different techniques for calculating the parameter (p) (also called PERC in several references). One of these methods is usually called the water-balance technique (Refs. 8 and 9 - also see Appendix C). The water-balance technique yields percolation components of about 74 mm of water per year for the northeast site, 180 mm of water per year for the southeast site, and 1 mm of water per year for the southwest site. These values are applicable to surface conditions at the site prior to construction and operation of a disposal facility. The volume of water percolating in this case will be denoted by V1.

For cases where there exists special disposal facility covers containing low permeability layers, and where the integrity of the covers can be assumed, the percolation component may be determined by the Darcy velocity of the least permeable stratum between the waste and the atmosphere (Ref. 10). The Darcy velocity of a material, with hydraulic conductivity (K) in units of m/yr and unit hydraulic gradient (the most conservative assumption), is equal to K m^3/m^2-yr. This number, however, should be modified by the fraction of each year during which there is at least 0.01 inch of precipitation. Therefore, in this latter case, (p) will be calculated from the following equation:

$$p = K\ (w/365) \qquad (6\text{-}22)$$

where (K) is the hydraulic conductivity of the least permeable layer covering the waste, and (w) is the mean annual number of days with 0.01 inch or more of rainfall (see Reference 10). Assuming that a permeability of 3×10^{-7} cm/sec (about 0.3 ft/yr) is applicable for the least permeable stratum of the disposal facility cover, and assuming appropriate values for w for each of the reference sites, this yields estimated percolation components of 36 mm, 30 mm and 1 mm, respectively, for the northeast, southeast and western sites. The volume of water percolating in this case will be denoted by V2.

The specific percolation value used in the calculations depends upon the particular disposal facilities considered. For on-site disposal, p is supplied by the user of the code. For municipal waste disposal, p varies depending upon whether one is considering a sanitary landfill or an open dump. For a sanitary landfill, p is assumed to be equal to V1 while for an open dump, p is assumed to be equal to 2V1. This basically assumes that in a well-operated sanitary landfill, percolation into the site will be no larger than that which existed prior to construction of the disposal facility. An open dump is assumed to be operated in a much less satisfactory manner than a sanitary landfill, including poor compaction of the waste, an inadequate, poorly compacted final cover, and failure to perform maintenance activities such as repair of subsidence depressions. This results in increased percolation into the waste. (The open dump is assumed to be characterized by potholes and subsidence depressions, resulting in concentrated sources of rain water infiltration).

Two optional values for the percolation are also available for the hazardous waste facility--i.e., the user of the code may select a percolation value equal to either V2 or V1. The former could represent a possible case in which the synthetic membrane in the disposal cell covers fail to function as expected (perhaps due to damage), and rainwater percolates through the compacted clay layer beneath the synthetic membrane. (See Sections 5.5.1 and C.4.2 for a description of the hazardous waste facility design). The latter could possibly represent a site operating under interim status standards (See Section C.4.2). Unlike the open dump, however, all hazardous waste facilities are assumed to be operated in a reasonable manner.

000148

The factor f_c represents the fraction of the activity that is transferred from the waste to the leachate. It may be calculated using the following formula:

$$f_c = M_0 \, t_c \, 10^{(1-IA)} \qquad (6\text{-}23)$$

where M_0 is the fraction of a specific radionuclide transferred from disposed waste to trench leachate due to contact of water at continuous full saturation; t_c is the fraction of a year that the infiltrating volume of water is in contact with the waste; and the factor $10^{(1-IA)}$ is the accessibility multiplier (see Section 2.2.4). These are discussed below.

The factor M_0 can be estimated by many methods. In this report, the average upper bounds of the leach fraction are estimated assuming that the leachate/waste conditions at the Maxey Flats disposal facility may be used to approximate this bounding fraction. As discussed extensively in Reference 1, radionuclide concentrations in leachate were obtained from leachate samples obtained from several disposal trenches. These radionuclide concentrations were then ratioed to the radionuclide concentrations in the waste disposed in the disposal trenches. The ratios obtained from each trench were then averaged over all trenches sampled. The ratios thus obtained are listed in Table 6-5.

The primary rationale for this approach is that under specified chemical conditions there is an upper limit to the solubility of all elements. The above disposal site, because of the presence of organic chemicals and chelating agents and because waste trenches can be assumed to be at continuous full saturation, may be assumed to represent extreme leachability conditions. This estimate also takes into consideration the fraction of the leached radioactivity that may be reversibly adsorbed by the interstitial trench soils. Some researchers believe that use of Maxey Flats estimates represent the best that can be achieved with the available experimental data (Ref. 4).

The use of the factor M_0, however, necessitates a correction factor to take into account the expected transient and partially saturated conditions. This correction factor is approximated through t_c. This fraction depends on the contact time between the waste and infiltrating water. Assuming that leaching at partial saturation is proportional to the moisture content, the fraction (t_c) may be expressed as the fraction of a year that the percolation component calculated above takes to pass through a given horizontal plane, i.e.,

$$t_c = p/(nv) \qquad (6\text{-}24)$$

where p is the precipitation (in m/yr) that infiltrates and comes into contact with the waste, n is the waste cell effective porosity, and v is the speed of the percolating water (in m/yr). The waste cell effective

TABLE 6-5 Radionuclide Partition Ratios Between Waste and Leachate

Element	Ratio	Element	Ratio
H*	1.15E+0**	Ag	1.62E-4
C*	5.76E-3	Cd	1.48E-2
Na	1.62E-4	Sn	1.62E-4
P	1.26E-3	Sb	1.62E-4
S	1.20E-2	I	1.15E-1
Cl	1.15E-1	Cs*	1.62E-4
Ca	9.86E-3	Ba	1.11E-4
Sc	1.11E-4	La	1.11E-4
Cr	1.26E-3	Ce	4.67E-4
Mn	1.26E-3	Eu	1.11E-4
Fe	1.48E-2	Yb	1.11E-4
Co*	1.48E-2	Pb	4.11E-3
Ni	1.48E-2	Po	4.11E-3
Zn	1.48E-2	Ra	4.11E-3
Se	1.20E-2	Ac	4.11E-3
Rb	1.62E-4	Th	4.11E-3
Sr*	9.86E-3	Pa	4.11E-3
Zr	9.86E-3	U*	1.25E-4
Nb	1.11E-2	Np	4.67E-4
Mo	1.15E-1	Pu*	4.67E-4
Tc	1.15E-1	Am*	4.11E-3
Ru	1.15E-1	Cm	4.67E-4
		Cf	4.11E-3

* These ratios are obtained from Reference 3, and were calculated based on experimental data. The remaining ratios are estimated based on chemical similarities between nuclides.

** Exponential notation, i.e., $1.15E+0=1.15x10^{+0}$.

000150

porosity can conservatively be assumed to be about 25% (partially compacted soils are likely to have higher porosities resulting in lower contact times). The value of v depends on the interstitial soils; a very conservatively low value of 1 ft/day (corresponding to a permeability of about $1x10^{-4}$cm/sec), an effective porosity of 0.25, and a hydraulic gradient of unity will be assumed in this report. The values for t_c for each of the reference sites are presented in Table 6-6. (The contact time fraction for the on-site facility is specified by the user of the codes.)

TABLE 6-6 . Values of Contact Time Fraction

	Volume of Water		
	V1	2 V1	V2
Northeast	$2.66x10^{-3}$	$5.39x10^{-3}$	$1.29x10^{-3}$
Southeast	$6.47x10^{-3}$	$1.29x10^{-3}$	$1.08x10^{-3}$
Southwest	$3.60x10^{-5}$	$7.19x10^{-3}$	$3.60x10^{-5}$

It should be noted that an increase or decrease in the volume of percolating water affects the contact time linearly, which is further incorporated into the formulation of the source term f_{wi}. Therefore, the source term is a quadratic function of percolation. It should also be noted that the contact time fraction approximation should only be considered reasonable over a relatively small range of percolating water speeds. Use of the contact time fraction also implies that the disposed waste is not in continuous full saturation.

The last factor in equation (6-23), $10^{(1-IA)}$, is the multiplier due to the relative inaccessibility of radioactivity in activated metals waste streams. The multiplier for activated metal waste forms has been discussed in Section 2.2.4. Use of the accessibility factor in the estimates of the groundwater migration source term is discussed in Reference 1.

6.3.2 Migration Reduction Factor

The waste form and package factor, as expressed above, yields the total source term (in m^3/yr) that can be expected from a given de minimis waste stream, and the product of the radioactive concentration with the source term gives the annual release (in Ci/yr). This source term must be related to the radionuclide concentrations at the groundwater biota access locations. This relation is expressed through the site selection factor (f_s) in units of yr/m^3. This factor, which has also been referenced as the "confinement factor" or "reduction factor" (Ref. 1), is the ground water migration analog of the (X/Q) dispersion factor in meteorological diffusion calculations.

In this report, a variation of the migration model utilized in the EIS's in support of the Part 61 rule is used (Refs. 11, 12). This model assumes that the porous medium consists of an unsaturated and a saturated zone, each of which is stationary, homogeneous and isotropic, and the fluid moving through these zones is incompressible and of constant viscosity.

Also very importantly, use of this model assumes that any liners placed beneath the disposal facilities are non-functional, or at least only partly functional. Hazardous waste facilities are required by EPA regulation to install liners, but to date there is little data regarding their overall effectiveness. Similarly, sanitary landfills may or may not incorporate liners, and like liners for hazardous waste facilities, only time and accumulated experience will demonstrate their effectiveness. The on-site disposal facility and open dump will probably not have liners installed in any case.

The source term is assumed to be given by J_0 (which is equal to f_{wi} multiplied by the waste radionuclide concentrations), whose units are in Ci/yr. The source term is assumed to exist during the source duration time (T). A geometry of the migration problem is shown in Figure 6.4.

The measurable hydrogeological parameters that must be included in a simulation of mass transport are: the geometry of the problem (e.g., the travel distance, x, to a biota access location), the hydraulic velocities of the fluid (e.g., v), the dispersion characteristics of the medium, and the retardation coefficients of the soils through which radionuclides are migrating. The space- and time-averaging of the above parameters, if necessary, may be accomplished in a straightforward manner (see Ref. 1).

As discussed in Section 6.1, it can be shown that the time dependent site selection factor is given by (Ref. 1):

$$f_{si} = [r_g/Q] \sum_j r_{tij} \qquad (6\text{-}25)$$

where (Q) is the dilution factor in units of volume/time; the factor r_g is the time-independent reduction factor due to the geometry of the problem (i.e., the spatial relationship of the disposal facility and the biota access location); j denotes the longitudinal sectors of the disposal facility shown in Figure 6.3; and r_{tij} is the reduction factor due to migration and radioactive decay which depends on both space and time, including the sectors of the disposal facility and the source duration time (T).

Geometric Reduction Factor - r_g

This reduction factor is assumed to be independent of the characteristics of the waste streams. It is also independent of the longitudinal relationship of the disposal facility with the biota access location. In this report, it is conservatively assumed that the geometric reduction factor r_g is its maximum value, unity.

000152

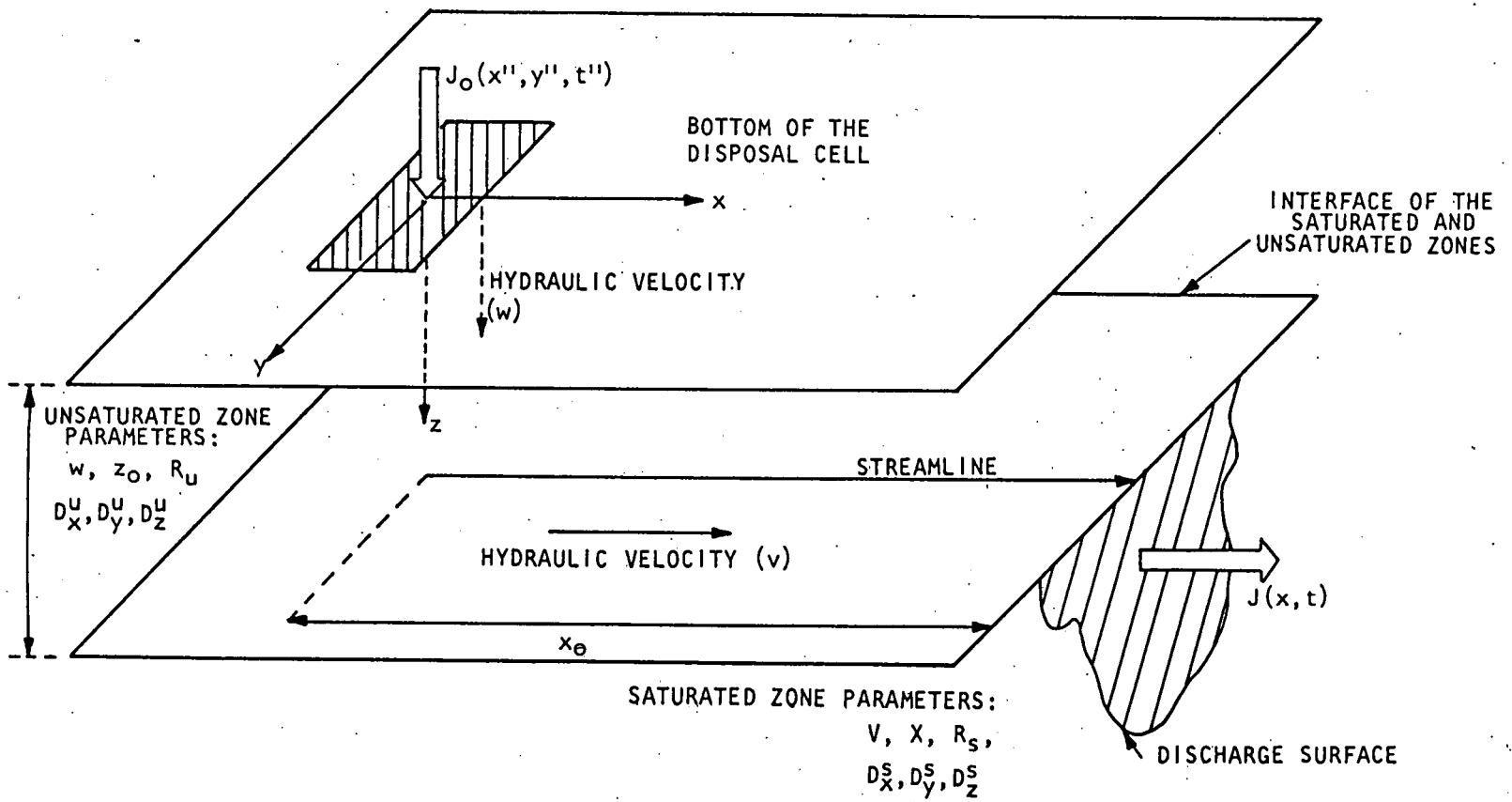

GEOMETRY OF GROUNDWATER MIGRATION

FIGURE 6.4

0001153

6400

Dilution Factor - Q

The dilution factor is independent of the characteristics of the waste stream and the geometrical relationship of the disposal facility with respect to access location. The factor Q may be the pumping rate of a well or the flow rate of a stream.

In this work, the dilution rates assumed are 200,000 m^3/year (about 100 gpm - gallons per minute) for the population well scenario and 4.5 x 10^6 m^3/year (about 5 cfs - cubic feet per second) for the surface stream scenario. Small farming communities that utilize groundwater for their needs usually have wells that range from 100 gpm to 1000 gpm depending on the population. A stream flow rate of about 5 cfs is selected since a stream with flow rate below this value is very unlikely to be used for human consumption. For example, Rock Lick Creek nearby the Maxey Flats disposal facility has an annual average flow rate of about 7 cfs, but it is not used for human consumption; it is used only for livestock.

For the intruder well scenario, Q is given by the assumed total volume of precipitation infiltrating through the disposal facility area under natural site conditions. In other words, the source term, J_0, calculated in the previous section is diluted by a minimum volume of water (infiltrating through the disposal area and recharging the groundwater) equal to the product of the site percolation (V1) with the total surface area of the disposal facility. The total surface area consists of the surface area of the disposal cells plus any space between the disposal cells. It is calculated by dividing the effective surface area (defined in Section 6.3.1) by the surface utilization efficiency (SEFF), where SEFF is defined as the ratio of the surface area of the disposal cells to the surface area of the disposal cells plus any space between the disposal cells. SEFF is provided by the code user for on-site disposal, and is assumed to be unity for municipal waste disposal and 0.9 for hazardous waste disposal.

There is a lower bound, however, for the value of the dilution volume for the intruder well. Otherwise the above technique would give invalid results for disposal facilities located in regional environments in which the natural percolation is low, e.g., a semi-arid environment. The lower bound dilution rate in this report is taken to be 7700 m^3/year (3.84 gpm), which represents the minimum practical needs of a single person living in a rural area (Ref. 3).

Migration Reduction Factor - r_{tij}

This factor depends on the time, after initiation of the scenario, that the exposure is assumed to occur, the duration of groundwater travel between the jth longitudinal sector making up the disposal facility and the biota access location, the retardation capability of the soils (radionuclide dependent), the duration of the assumed source term, and the waste stream characteristics. The longitudinal extent of the disposal facility is considered by dividing the facility into 10 sectors and summing the contributions from each sector (assumed to be equal in size)

000154

to obtain the concentrations at the biota access location. In this work, the following formula is used for the migration reduction factor r_{tij}:

$$r_{tij} = [\exp(-\lambda t)/(J x T_i)] \times [\ F_j(t) - F_j(t-T_i)\ ] \qquad (6\text{-}26)$$

where λ is the decay constant of the radionuclide; t is the time at which the migration reduction factor is applicable; J is the total number of longitudinal sectors the disposal site has been divided into, which is 10 in this work (see Figure 6.3); T_i is the source duration time for the ith de minimis waste stream; and j denotes the sector of the disposal site. The function $F_j(t)$ is given by the following formula (see Refs. 1,2):

$$F_j(t) = 0.5 \times U(t) \times [\mathrm{erfc}(X_-) + \exp(P_j)\ \mathrm{erfc}(X_+)] \qquad (6\text{-}27)$$

$$X_\pm = \frac{\sqrt{P_j}}{2} \frac{1 \pm t/(Rt_{wj})}{\sqrt{t/(Rt_{wj})}} \qquad (6\text{-}28)$$

where U(t) is the unit impulse function that is zero for a negative argument and is equal to unity otherwise; t_{wj} is the water travel time between the disposal sector being considered and the biota access location; P_j is the Peclet number for the distance between the disposal sector and the biota access location; R is the retardation coefficient of the radionuclide; and erfc(x) is the complement of the error function and is given by the formula (Ref. 12):

$$\mathrm{erfc}(x) = 1 - \int_0^x (2/\pi)\ \exp(-t^2)\ dt \qquad (6\text{-}29)$$

The retardation coefficients (R) that are utilized in the above equations depend on the radionuclide as well as the geochemistry of the soils and the transporting groundwater. They are indicative of the reversible ion exchange capability of the soils and represent the ratio of the radionuclide velocities in the soil to the groundwater velocities. The cation exchange capacity of the soils is a parameter which can be used to estimate the retardation coefficients of the soils, since retardation coefficients are usually linearly dependent on the cation exchange capacity. Five optional sets of retardation coefficients, presented in Table 6-7, may be selected by the user of the code.

The clay and mineral content of the soils, in addition to the groundwater chemistry, significantly affects the retardation capability of the soils. The retardation coefficients given in Table 6-7 span the general range of values that are encountered in groundwater migration calculations. The first set is representative of coefficients for sandy soils with low to

TABLE 6-7 . Assumed Retardation Coefficients[a]

Element[b]	Valence	Set 1	Set 2	Set 3	Set 4	Set 5	BNWL
H	1	1	1	1	1	1	1
C	2,4	10	10	10	10	10	10
Na	1	85	173	350	720	1460	50
P	3,5	43	87	177	360	730	--
S	2,4,6	9	15	25	42	70	--
Cl	1,5,7	2	3	4	5	6	1
Ca	2	9	18	36	73	146	100
Sc	3	9	18	36	73	146	--
Cr	2,3,6	43	87	177	360	730	--
Mn	2,3,4,6,7	43	87	177	360	730	--
Fe	2,3	630	1,290	2,640	5,400	11,050	3,333
Co	2,3	420	860	1,750	3,600	7,350	333
Ni	2,3	420	860	1,750	3,600	7,350	333
Zn	2	9	18	36	73	146	--
Se	2,4,6	9	15	25	42	70	33
Rb	1	85	173	350	720	1460	500
Sr	2	9	18	36	73	146	100
Zr	4	1,000	2,150	4,640	10,000	21,500	10,000
Nb	3,5	1,000	2,150	4,640	10,000	21,500	10,000
Mo	3,4,6	2	3	4	5	6	25
Tc	6,7	2	3	4	5	6	1
Ru	3,4,6,8	2	3	4	5	6	--
Ag	1	85	173	350	720	1,460	--
Cd	2	9	18	36	73	146	10,000
Sn	2,4	85	173	350	720	1,460	1,111
Sb	3,5	9	18	36	73	146	100
I	1,3,5,7	2	3	4	5	6	1
Cs	1	85	173	350	720	1,460	1,000
Ba	2	9	18	36	73	146	--
La	3	9	18	36	73	146	--
Ce	3,4	840	1,720	3,520	7,200	14,730	--
Eu	2,3	9	18	36	73	146	250
Yb	2,3	9	18	36	73	146	--
Pb	2,4	840	1,720	3,520	7,200	14,730	16,666
Po	--	9	18	36	73	146	111
Rn	0	1	1	1	1	1	1
Ra	2	30	60	120	250	500	500
Ac	--	300	600	1,200	2,500	5,000	5,000
Th	4	840	1,720	3,520	7,200	14,730	50,000
Pa	--	840	1,720	3,520	7,200	14,730	16,666
U	4,6	840	1,720	3,520	7,200	14,730	14,286
Np	4,5,6	300	600	1,200	2,500	5,000	100
Pu	3,4,5,6	840	1,720	3,520	7,200	14,730	10,000
Am	3,4,5,6	300	600	1,200	2,500	5,000	10,000
Cm	3	300	600	1,200	2,500	5,000	3,333
Cf	--	300	600	1,200	2,500	5,000	--

(a) Sets 1 and 4 values for H, Cr, Mn, Fe, Co, Ni, Sr, Tc, I, Cs, Np, Pu, Am, and Cm are obtained from Reference 15; values for the other elements are based on chemical similarites and comparative retardations using the BNWL column (Ref. 16). Sets 2 and 3 are obtained as geometric midpoints of sets 1 and 4, and set 5 is similarly calculated.

(b) Coefficients for other isotopes of same element are assumed to be the same.

(c) These values are given in Reference 16 for desert soils with a moderate cation exchange capacity of about 5 meq/100g. They have been used as a guide to help fill in missing values.

000156

moderate cation exchange capacities, and is assumed to represent the lower bound of retardation coefficients used in this analysis. The fourth set is representative of coefficients for clayey soils with moderate to high cation exchange capacities, and is assumed to represent the best conditions that can be routinely achieved. In between these two sets, two other sets have been postulated and have been calculated utilizing the geometric mid-points of sets 1 and 4. A fifth set of coefficients has been also calculated for use in special cases.

Any one of the five sets of retardation coefficients may be selected by the user of the code for a given site. As a reference, however, the third set is assumed in this report for the northeast site, the second set for the southeast site, and the first set for the southwest site. The choice of these three sets reflects consideration of the probable presence of chelating agents or organic chemicals in the disposed waste.

The source duration time T_i for the ith de minimis waste stream is determined by dividing the total activity in the stream with the annual release fraction which is given by the factor f_{wi} multiplied by the radionuclide concentration. This calculation conservatively neglects the depletion of the radionuclide inventory at the disposal facility by previous releases, and results from the manner in which the radionuclide source term is modeled. That is, each year a fixed "slug" of activity is released until the radionuclide inventory is depleted after T_i years. No "exponential" source term, in which the fraction of the initial site inventory released each year is exponentially reduced, is considered.

The groundwater travel times t_{wj} depend on the distance between the disposal facility sector being considered and the biota access location. The travel time between waste disposed in the first sector and a biota access location is denoted by t_{w1}, and is given as the sum of the time required to traverse the unsaturated zone with the time required to move horizontally through the groundwater to the biota access location. It is assumed for both the northeast and the southeast sites, for example, that groundwater takes 10 years vertically to traverse the unsaturated zone. The assumed values of t_{w1} for the hazardous and municipal waste disposal facilities are presented in Table 6-8 for each reference site. The groundwater travel time between the center lines of two adjacent sectors is also shown in Table 6-8. To determine the groundwater travel times to biota access locations from the other sectors, an appropriate multiple of the travel time between sectors is added to t_{w1}.

The groundwater times for the sanitary landfill and hazardous waste facility are believed to be reflective of good site selection procedures, and correspond to groundwater speeds of 0.2 m/yr for the northeast site, 1.25 m/yr for the southeast site, and 10 m/yr for the southwest site. The open dump, however, is assumed to be sited in a less careful manner. The vertical travel time between the waste and the groundwater table is assumed to be zero for both the northeast and the southeast sites, and the horizontal groundwater speeds for these two sites are assumed to be 1 m/yr and 5 m/yr, respectively. For the southwest site open dump, however, the

TABLE 6-8 . Reference Travel Times and Peclet Numbers

Biota Access Location		Northeast	Southeast	Southwest
Travel Time (years)				
Between Sectors	- SLF*	170	27.2	3.4
	- OD	34	6.8	3.4
	- HWF	455	72.8	9.1
to Intruder Well	- SLF	95	23.6	280
	- OD	17	3.4	280
	- HWF	237.5	46.4	280
to Population Well	- SLF&HWF	2500	400	580
	- OD	500	100	580
to Surface Stream	- SLF&HWF	5000	800	NA**
	- OD	1000	200	NA
Peclet Number				
Between Sectors	- SLF&OD	340	680	340
	- HWF	910	1820	910
to Intruder Well	- SLF&OD	170	340	170
	- HWF	455	910	455
to Population Well	- all	10000	10000	30000
to Surface Stream	- all	20000	20000	NA

* SLF : Sanitary landfill
OD : Open dump
HWF : Hazardous Waste Facility
** NA : Not Applicable

000158

groundwater speeds and travel times are assumed to be the same as those for the sanitary landfill. This is due to the thickness of the unsaturated zone, uniformity of topography and groundwater regimes, and the semi-arid nature of the southwest site with the ensuing low stream densities and high evaporation during periods of high precipitation.

For the on-site disposal facility, the ground water travel times, t_{w1}, from the first sector to the intruder well, population well, and surface stream, and the travel times between two adjacent disposal site sectors must be supplied by the user of the code.

The Peclet number, P_j, is the distance from the disposal sector to the biota access location divided by the longitudinal dispersivity of the medium. Longitudinal dispersivities for the northeast, southeast, and southwest sites are assumed to be 10 cm, 5 cm, and 10 cm, respectively. Peclet numbers for the distances between the first sector and the biota access locations, and between two adjacent sectors, are determined in a manner similar to the travel times. The Peclet numbers for each reference site and disposal facility are given in Table 6-8, along with the Peclet numbers corresponding to the distances separating the centerline of each sector. The user of the code must supply the four appropriate Peclet numbers for the on-site disposal facility.

The discussion presented above for the variation of travel times is applicable to the selected Peclet numbers as well. In this manner, the unsaturated and saturated zones are considered as a single unit. The primary justification for this approach is the generic nature of the analysis. Moreover, as long as the groundwater travel time in the unsaturated zone is added to the saturated zone travel time, and the Peclet numbers for the two zones are added, the above is a reasonable approximation to the alternative of considering saturated and unsaturated zones as two units with the ensuing complications. Such a treatment can be found in a previous work by the authors (Ref. 1).

It may also be pointed out that using groundwater travel times (and the Peclet numbers discussed above) as the primary variables on which the migration analysis is based implicitly allows for a sensitivity analysis. Sites with differing environmental parameters may lead to similar radionuclide concentrations at the access locations. For example, similar results would be obtained if the groundwater velocity is twice as high and the distance to the access location is twice as large. Similarly, a larger unsaturated zone travel time (water speeds of the order of 10^{-2} ft/year are common) would compensate for a shorter saturated zone travel time.

6.3.3 Disposal Cell Leachate Treatment and Overflow

One of the difficulties faced when modeling groundwater impacts associated with de minimis waste disposal into municipal landfills or hazardous waste facilities is that the designs of these disposal facilities frequently include installation of disposal cell liners. These liners are frequently described as being "impermeable" and are intended to prevent

migration of toxic materials out of the waste and into the aquifer beneath the disposal facility. The existance of the liners, or alternatively the possibility of disposal of waste into highly impermeable soils, complicate groundwater migration calculations, since percolating water can potentially accumulate in rather than flow through the disposal cells.

This "bathtub" effect has been observed at low-level radioactive waste disposal facilities in the past, and if the water is allowed to continue to accumulate so that the disposal cell fills up with leachate, the disposal cell could overflow, in which case potential public impacts could occur. Alternatively, the disposal site operators could pump the accumulating leachate from the disposal cells, send the leachate through a treatment process, and then release the treated leachate to the environment. The leachate treatment process would also involve potential public impacts, since no treatment process will be fully effective in removing the toxic constituents from the leachate.

An order of magnitude estimate of potential impacts from leachate treatment and overflow is thus provided. This estimate is adopted from a calculational procedure outlined in Reference 12. Briefly, three scenarios are considered:

1. During operation of the disposal facility, accumulating leachate is continuously removed by site operators, processed in some manner, and released into a nearby stream. The contaminated stream water is consumed and used by an individual, and impacts to the individual are calculated in units of mrem/yr.
2. Accumulating leachate is allowed to completely fill up the disposal cells to the point that the leachate overflows the disposal cells. The overflowing leachate is carried to a nearby stream, and impacts from consumption and use of the contaminated stream water are again calculated in units of mrem/yr.
3. Rather than overflow, the accumulated leachate in the second scenario above is assumed to be processed through an evaporator. Radionuclides released through the evaporator stack impact the surrounding population (in person-mrem/yr).

The first scenario would correspond to a situation in which a disposal facility is designed for leachate collection and removal. This would be the case at a hazardous waste disposal facility (see Section C.4.2 of Appendix C), where in accordance with EPA regulations liners are required, and no more than 1 ft head of leachate is allowed to buildup on the liner. Example treatment processes could include filtration and ion exchange systems. The second scenario corresponds to a situation in which insufficient attention is given to accumulating leachate, which could potentially occur at some time after the disposal facility is closed. The third scenario corresponds to a situation in which remedial actions are taken at a closed disposal facility.

Impacts from the first two scenarios (H_1 and H_2) and the third scenario (P) are thus given as:

000160

$$H_1 = \sum_i \sum_n f_o (A_{in}/Q) f_{1n} \text{ PDCF-7} \quad (6\text{-}30a)$$

$$H_2 = \sum_i \sum_n f_o'(A_{in}/Q) f_{2n} \text{ PDCF-7} \quad (6\text{-}30b)$$

$$P = \sum_i \sum_n f_o' A_{in} f_{rn} \text{ POP PDCF-3} \quad (6\text{-}30c)$$

with:

$$A_{in} = C_{in} f_i \text{ VL } M_o t_c 10^{(1-IA)} \quad (6\text{-}31)$$

where:

f_o = decay correction factor for the first scenario (see below);
f_o' = decay correction factor for the other scenarios (see below);
A_{in} = activity (Ci) contained within leachate volume (VL) annually generated or processed;
Q = flow rate of surface stream (assumed to be 4.5×10^6 m^3/year - see Section 6.3.2);
f_{1n} = radionuclide release fraction from operational leachate treatment process;
f_{2n} = radionuclide retention in soil during overland flow;
f_{rn} = radionuclide fraction released into the air due to evaporator operation;
POP = population-weighted atmospheric dispersion factor (See Section 4.1.5);
C_{in} = concentration (Ci/m^3) of nth radionuclide in i^{th} de minimis waste stream;
f_i = fraction of the total site waste volume that is composed of the ith de minimis waste stream;
VL = volume (m^3) of leachate annually released or processed;
M_o = radionuclide-specific leach fraction (see Table 6-4);
t_c = fraction of a year that the leachate is in contact with the waste; and
IA = accessibility index (see Section 2.2.2).

Parameters requiring additional explanation include f_o, f_{1n}, f_{2n}, f_{rn}, VL, and t_c. The decay correction or the time delay factors, f_o and f_o', account for radionuclide decay. The first scenario is conservatively assumed to occur during the last year of waste disposal. Consequently, this factor is given by the following:

$$f_o = [1+\exp(-\lambda_n)+\exp(-2\lambda_n)+\cdots+\exp(-(ILFE-1)\lambda_n)]/ILFE \quad (6\text{-}32a)$$

where λ_n is the radionuclide decay constant (yr^{-1}) and ILFE is the facility life in years. Each term above accounts for the decay of the de minimis waste disposed in a specific year, e.g., $\exp(-\lambda_n)$ is the decay factor for the de minimis waste disposed during the penultimate year of

operations. The second and third scenarios are conservatively assumed to occur after an applicable decay time, T, after the closure of the facility. Consequently, the factor f_0' is given by the following:

$$f_0' = f_0 \exp(-\lambda_n T) \qquad (6\text{-}32b)$$

For the second and third scenarios, T is assumed to be the time between site closure and initiation of the scenario, i.e., the institutional control period (IINS), which is always input by the code user as discussed in Section 2.2.1.

The radionuclide release fractions for operational leachate treatment, f_{1n}, apply only to the first scenario. These release fractions are radionuclide-specific, are defined for a given radionuclide as the activity released by the treatment process divided by the total activity input to the treatment process (i.e., the inverse of the decontamination factor for the radionuclide treatment process). Given the very wide range in treatment process that could be implemented, f_{1n} is conservatively assumed to be unity for all radionuclides in this report. The user of the code may optionally use different values of f_{1n} based upon further research and specific information on particular treatment processes.

The factor f_{2n} is also radionuclide-specific, and applies only to the second scenario. It gives, for a given radionuclide, the fraction that is retained in soil during transport from the disposal cell to the stream. Due to a lack of site-specific data, these retention fractions are conservatively assumed to be unity for all radionuclides. The user of the code may optionally substitute alternative values for f_{2n} based on further research and site-specific information.

The radionuclide release fractions for the evaporator, f_{rn}, are assumed based upon information obtained from Reference 12, and upon assumed chemical similarities of particular elements. They are given in Table 6-9.

TABLE 6-9 . Release Fractions for Leachate Treatment

Radionuclide	Release Fraction - f_{rn}
H-3	0.90
C-14	0.25
Cl-36	0.01
Tc-99	0.01
All Ruthenium	0.01
All Iodine	0.01
All others	2.5×10^{-3}

000162

VL is difficult to estimate, but for this report will be assumed to be equal to the total volume of water percolating into the disposal cells per year. This volume is given as the percolation (p) times the effective disposal site surface area (S_f), where S_f is given as equation 6-21. This also gives conservative results, since it corresponds to the last year of facility operation when the disposal facility will be filled to capacity with waste. The percolation (p) is a function of the design and operation of the disposal facility. Default values for p for municipal and hazardous waste disposal are discussed in Section 6.3.1. For on-site disposal, p is supplied by the code user.

The contact time fraction, t_c, also differs depending upon the scenario. For the first scenario, leachate is assumed to be removed continuously during operation, and so percolating water is assumed to flow through the waste rather than saturate the waste continuously. Thus t_c for the first scenario is given as a function of percolation as discussed in Section 6.3.1 and listed in Table 6-6. For the second and third scenarios, the waste is assumed to be in continuous saturated contact with the leachate, and so t_c for these last two scenarios is assumed to be unity.

6.4 Exposed Waste Scenarios

In these scenarios, the earthen cover over the disposed waste is assumed to be totally or partially removed, resulting in exposure of the waste and dispersal by wind or water. Two possible mechanisms are considered for removal of the cover: (1) the actions of a potential inadvertant intruder (see Section 6.2), and (2) erosion of the cover by wind or surface water. For each removal mechanism, two radiological exposure scenarios are considered. One involves suspension and airborne dispersal of contaminated particulates to the area surrounding the disposal site, leading to exposures to the surrounding population resulting from inhalation, immersion and other pathways. The second scenario involves transport of radionuclides via surface water runoff to an off-site surface water body, leading to exposures to individuals using the contaminated water body. This results in four exposed waste scenarios depending upon the particular cover removal mechanism and radionuclide transport agent considered: intruder-air, intruder-water, erosion-air, and erosion-water.

The following equations are utilized to calculate human exposures resulting from these scenarios. For the water transport and access scenarios:

$$H = \sum_i \sum_n (f_o f_d f_{wi} f_s)_{wat} C_{in} \text{ PDCF-7} \qquad (6\text{-}33)$$

and, for the air transport and access scenarios:

$$P = \sum_i \sum_n (f_o f_d f_{wi} f_s)_{air} C_{in} \text{ PDCF-8} \qquad (6\text{-}34)$$

where PDCF-7 and PDCF-8 are the radionuclide specific pathway dose conversion factors discussed and presented in Appendix D, C_{in} is the radionuclide concentration in the ith de minimis waste stream (see equation 6-5), n denotes summation over all the radionuclides, and i denotes summation over all the de minimis waste streams. Exposures are calculated for the water transfer scenarios to an individual who is assumed to consume and use contaminated water from the off-site surface water body, and H represents the 50th year annual dose rate in mrem/yr after 50 years of exposure. For the air transport scenrios, exposures are calculated to the surrounding population, and P represents the total population dose rate in person-mrem/yr after 50 years of exposure. The values for the transfer factors are presented below.

The time delay factor (f_0) is defined by:

$$f_0 = \exp[- \lambda T] \qquad (6\text{-}35)$$

where T is the delay time, and λ is the decay constant. For the intruder-initiated exposed waste scenarios, the delay time (T) is taken to be the period between the cessation of active disposal operations and the end of the active institutional control period, or IINS. IINS is always specified by the user of the code. For the erosion-initiated exposed waste scenarios, the delay time is assumed to be 1000 years for both sanitary landfill and hazardous waste disposal, and 300 years for open dump disposal. These values are extremely conservative. Previous estimates on the erosion potential of adequately emplaced cover materials have ranged from 1000 years to 10,000 years to erode 1 meter of soil cover (Ref. 4). For on-site disposal, the erosion delay time is specified by the user of the code.

The site design factor (f_d) is defined as the fraction of the exposed area that is waste, and will be assumed to be independent of the waste stream considered. It will be taken as the product of the waste emplacement and the cover mixing efficiencies for the intruder-initiated scenarios (see Section 6-2), and as the product of the waste emplacement and the surface utilization efficiencies for the erosion-initiated scenarios. (For on-site disposal, f_d is further multiplied by the surface utilization efficiency as discussed in Section 6-2.) The waste emplacement efficiency is 0.8 for the reference municipal waste disposal facilities and 0.75 for the reference hazardous waste disposal facilities. The cover mixing efficiency (RMIX) was calculated to be 0.59 for sanitary landfill disposal, 0.87 for open dump disposal, and 0.41 for hazardous waste disposal. The surface utilization efficiency (SEFF) is the fraction of the total disposal area that is occupied by waste disposal cells, and is equal to unity for municipal waste (sanitary landfill and open dump) disposal and 0.9 for hazardous waste disposal. For on-site disposal, the waste emplacement, the cover mixing, and the surface utilization efficiencies are supplied by the user of the code.

000164

The waste form and package factor (f_{wi}) denotes the total volume of the soil-waste mixture mobilized by the transfer agent per year. In this report, it may be empirically broken down into the following components.

$$f_{wi} = E \times (A_i/d) \qquad (6\text{-}36)$$

where:

E = soil-waste mixture mobilization rate (in g/m^2-yr) which will be taken to be independent of the waste stream.

A_i = area of the soil-waste mixture (in m^2) that can be identified with the $(i)^{th}$ de minimis waste stream.

d = density of the soil-waste mixture (in g/m^3)

This equation is applicable for both the wind transport scenario and the surface water scenarios. Specific values for the above parameters and the site selection factor, f_{si}, are discussed below.

6.4.1 Wind Transport Scenario

For the erosion-initiated scenarios, the airborne mobilization rate (E) is obtained from calculations presented in Section 5.5.3.1. Based upon average wind speeds at each of the reference sites, E is approximated as 5.53×10^{-4} mg/m^2-sec at the northeast site, 1.54×10^{-5} mg/m^2-sec at the southeast site, and 7.95×10^{-3} mg/m^2-sec at the southwest site. The density of the soil/waste mixture is assumed to be 1.6 g/cm^3.

Since for the erosion initiated scenario the entire disposal facility is assumed to be exposed to wind transfer, A_i is given as the following:

$$A_i = V_i/(EMP \times EFF \times SEFF) \qquad (6\text{-}34)$$

where

V_i = total disposed volume of the ith de minimis waste stream;
SEFF = surface utilization efficiency;
EMP = waste emplacement efficiency; and
EFF = volumetric disposal efficiency, in m.

The first parameter is effectively supplied by the user of the code. The last three parameters are defined in Sections 6.3.1 and 6.3.2, and values for EMP and EFF are provided in Table 6-4 for municipal and hazardous waste disposal. For on-site disposal values for these last three parameters are supplied by the user of the code.

For the intruder-initiated scenarios, calculations are more complicated since there are two different intruder scenarios considered in this

report, and each scenario involves different exposed waste areas. For the intruder-construction scenario, a 200 m^2 area is assumed to be exposed for 500 hours out of the year while for intruder-agriculture scenario, an 1800 m^2 area is assumed to be exposed for an entire year. In addition, the two intrusion scenarios involve dust mobilization initiated by both man-made and natural mechanisms, and the fractions of a year that the two mechanisms are applicable differ for each scenario. This means that a time-weighted average mobilization rate must be calculated for each scenario. Finally, the cover mixing efficiency (defined in Section 6.2.1) is considered for the intruder-agriculture scenario but not for the intruder-construction scenario.

Considering the above factors, it may be demonstrated that total off-site releases are very similar for either intruder scenario, and that as long as the cover over the disposed waste is not much thicker than 1 m, the releases from the intruder-agriculture scenario are slightly larger. Thus, the intruder-agriculture scenario is assumed for calculation of off-site impacts. In this case, A_i is given as 1800 m^2 multiplied by the ratio of the disposed de minimis waste volume to the total volume of waste (de minimis plus non-radioactive) disposed.

To calculate the time-weighted dust mobilization rate for the intruder-agriculture scenario, an elevated dust loading is assumed for 100 hours out of the year which accounts for activities such as tilling which could raise significant quantities of dust through the mechanical distiurbance of the soil. (See Section 6.3.2 for a discussion of the assumed human activities incorporating this scenario.) The remainder of the year (8660 hours) natural wind suspension is assumed to prevail.

As discussed in reference 1, dust mobilization caused by heavy equipment operation may be calculated using the following empirical equation:

$$E' = E_0 \times (s/30) \times (50/PE)^2 \qquad (6\text{-}35)$$

where E_0 is 0.432 mg/m^2-sec, s is the silt content of the soil (in percent), and PE is Thornthwaite's Precipitation-Evaporation index. The values for E' are calculated using appropriate values from Table C-9 of Appendix C, and are presented in Table 6-10.

TABLE 6-10 . Mobilization Rates for Erosion Scenarios

Site Environment	Natural E(mg/m^2-sec)	E'(mg/m^2-sec)	Time-averaged E(mg/m^2-sec)
Northeast	5.53×10^{-4}	0.127	2.03×10^{-3}
Southeast	1.54×10^{-5}	0.218	2.50×10^{-3}
Southwest	7.95×10^{-3}	5.306	6.84×10^{-2}

000166

The time-weighted average values for E, also presented in Table 6-10, are calculated assuming that the site-specific natural dust mobilization rates calculated above for the erosion-initiated scenario are applicable for the remainder of the year. Also given in Table 6-10 are the natural mobilization rates quoted at the beginning of this section.

The site selection factor, f_s, is similar for both the intruder- and erosion-initiated scenarios. For the former, it is equal to POP as discussed in Section 4.1.5 for a ground level release. For the latter, POP is multiplied by three to account for population growth during the years between site closure and initiation of the scenario.

6.4.2 Surface Water Scenario

Based on surface water erosion calculations (see Appendix A of ref. 3), the mobilization rate for both surface water scenarios (i.e., the factor E in equation 6-27) is calculated to be 1.84×10^2 g/m^2-year. This factor corresponds to an annual erosion rate of about 0.82 tons/acre. Annual erosion rates vary with the soil properties, vegetation, prior erosion, topography, etc. The annual erosion rate for the Appalacian region for the past 125 million years has been calculated to be 0.75 tons/acre. The other factors in equation 6-33 remain as defined in Section 6.4.1 for the respective erosion-initiated and intruder-initiated scenarios.

The surface water site selection factor can be estimated by considering the flow rate of a nearby stream assumed to be utilized by a member of the population. In this report, the inverse of twice the value of the dilution factor Q previously utilized to determine groundwater impacts at the surface water biota access location will be utilized for the site selection factor, i.e., 1.11×10^{-7} yr/m^3. Twice the value is utilized to account for the increased flow conditions during heavy precipitation and subsequent heavy stream flow rates. The assumption of this value corresponds to dilution of the released radioactivity in a stream with a flow rate of about 10 cubic feet per second, and it is conservative since a stream with a flow rate this low is unlikely to be utilized for human consumption.

CHAPTER 6.0 REFERENCES

(1) Aikens, A. E., et.al., Dames & Moore, "Generic Methodology for Assessment of Radiation Doses From Groundwater Migration of Radionuclides in LWR Wastes in Shallow Land Burial Trenches," Prepared for Atomic Industrial Forum, Inc., AIF/NESP-013, December 1977.

(2) Lester, D., et.al. Science Application Inc., "Systems Analysis Study of Shallow Land Burial Project," Volumes 1, 2, 3, USNRC Report NUREG/CR-1963, March 1981.

(3) Oztunali, O. I., et.al., "Data Base for Radioactive Waste Management, Volume 3, Impacts Analyses Methodology Report," USNRC Report NUREG/CR-1759, November 1981.

(4) Healy, J. W., and J. C. Rodgers, "Limits for the Department of Energy Transuranic Wastes," Los Alamos Scientific Laboratory, LA-UR-79-100, January 1979.

(5) U.S. Department of Health Education and Welfare, "Radiological Health Handbook," Revised Edition, January 1970.

(6) U.S. Nuclear Regulatory Commission, Office of Nuclear Materials Safety and Safeguards, "Final Generic Environmental Statement on Uranium Milling," USNRC Report NUREG-0706, September 1980.

(7) Adam, J. A., and V. L. Rogers, "A Classification System for Radioactive Waste Disposal - What Waste Goes Where?," NUREG-0456, FBDU-224-10, Prepared by Ford Bacon & Davis Utah for USNRC, June 1978.

(8) Thornthwaite, C. W., and J. R. Mather, "Instructions and Tables Computing Potential Evapotranspiration and the Water Balance," Climatology, Vol. 10, No. 3, 1964.

(9) Fenn, D. G., K. J. Henley, and T. V. DeGeare, "Use of the Water Balance Method for Predicting Leachate Generationb from Solid Waste Disposal Sites," EPA/530/SW-168, 1975.

(10) Freeze, R. A., and J. A. Cherry, Groundwater, Prentice Hall, Inc., New Jersey, 1979.

(11) U.S. Nuclear Regulatory Commission, Office of Nuclear Materials Safety and Safeguards, "Draft Environmental Impact Statement on 10 CFR Part 61 : Licensing Requirements for Land Disposal of Radioactive Waste," NUREG-0782, September 1981.

(12) U.S. Nuclear Regulatory Commission, Office of Nuclear Materials Safety and Safeguards, "Final Environmental Impact Statement on 10 CFR Part 61 : Licensing Requirements for Land Disposal of Radioactive Waste," NUREG-0945, November 1982.

000168

(13) U.S. Department of Commerce, "Statistical Abstract of the United States-1981," (102nd Edition), Bureau of the Census, December 1981.

(14) Abramowitz, M., and I. A. Stegun, Handbook of Mathematical Functions with Formulas, Graphs, and Mathematical Tables, National Bureau of Standards, Applied Mathematics Series-55, December 1965.

(15) Staley, G. B., G. P. Turi, and D. L. Schreiber, U.S. Nuclear Regulatory Commission, "Radionuclide Migration From Low-Level Waste: A Generic Overview," Management of Low-Level Radioactive Waste, Volume 2, Pergamon Press, New York, 1979.

(16) Schneider, K. J., and A. M. Platt, "High-Level Radioactive Waste Management Alternatives," Battelle Pacific Northwest Laboratories Report No. BNWL-1900, May 1974.

7.0 RECYCLE OF METAL OR GLASS

This chapter considers the methodology for calculating exposures to individuals and populations resulting from recycle of the metal or glass component of de minimis waste. As mentioned previously (see Section 4.3.3), the sorting option for a municipal incinerator has three variations, one of which involves recycle of the metal/glass component. The waste is first size-reduced by putting it through a hammermill, and then one of the following is performed:

1. The size-reduced waste is incinerated and the combustion residue is sent to landfill disposal.

2. The size-reduced waste is sent through an air classifier to separate the light combustible fraction from the heavy non-combustible fraction. The combustible fraction is then incinerated, while the remaining non-combustible fraction -- consisting of metal, glass, and other material -- is sent to landfill disposal.

3. The size-reduced waste is sent through an air classifier and the separated combustible fraction is incinerated. The non-combustible metal/glass fraction is separated from the other non-combustible material and is sold as scrap for recycle. The remaining non-combustible material is sent to landfill disposal.

Variation 3 involves recycle of metal and glass which are sold for scrap. In addition to these sorting options, if the de minimis waste is received at the disposal site in metal packages (e.g., 55-gallon drums), then it is possible that the metal packages may also be recycled as scrap. The metal/glass sold for scrap is assumed to be processed into consumer products, and individuals and populations associated in the retrieval, manufacture, and use of these products receive radiation exposures.

To date, there has been relatively little work performed to characterize impacts from recycle of contaminated metal scrap arising from de minimis waste disposal. One work which appears to be partly applicable to de minimis waste disposal is Reference 1, and with some reservations, is used in this report. The authors are aware of no work which addresses impacts from recycle of contaminated glass, and so a number of assumptions must be made to enable such impacts to be calculated.

In sections below, a metal recycle scenario and a glass recycle scenario are considered. However, first a background section is presented.

7.1 Background

Materials recovery is one of the two principal forms of resource recovery. (The other form of resource recovery is energy recovery.) Specific materials may be recovered for reuse either in their existing form or some modified or derived form. For example, newspapers as a fibrous material may be recovered for reuse as newsprint, wallboard building materials, or roofing materials.

It is apparent that much of the waste materials currently being discarded are potentially recoverable, and there has been considerable interest in the development of practical and economical recovery systems. The success of the various materials recovery efforts has been quite variable; recovery efforts have been extremely successful for some materials and quite unsuccessful for others. A number of materials may be potentially recycled, but only recycle of metal and glass is believed to be of significance in terms of de minimis waste disposal (see Appendix B).

A brief discussion of recycle activities carried out for metal and glass is presented below. A more extensive discussion of resource recovery can be found in Appendix B.

Metals

Considerable recycling of metallic waste is already being performed. Recycling rates for in-house wastes in the metals processing industries are fairly high, and vary depending upon the degree to which the metals are used in composite materials. Out-of-house recycle rates for ferrous metals are also significant, although in the past several years the market for scrap metal has been depressed. As of about 1970, about 40 million tons of scrap metal was used in steel production. Much of this material recovery was performed prior to mixing of scrap metal with municipal refuse (e.g., recovery of junked automobiles). In 1973, about 4 million tons of steel cans were discarded in the United States, and only about 2% were recovered. Most non-ferrous metals are recycled to a greater degree than ferrous metals, which is primarily due to smaller existing supplies of ore.

Impacts from metals recycling are calculated in this work based on six scenarios for scrap metal recycle considered and treated in detail in Reference 1. These six scenarios consider the following: (1) copper tubing into copper tubing for domestic plumbing, (2) copper wire into copper wire for domestic wiring, (3) ferrous sheet into metal siding for commercial buildings, (4) ferrous sheet into stainless-steel kitchen sinks, (5) ferrous pipe into iron construction rods, and (6) bulk iron into cast-iron frying pans. These scenarios are further discussed in Section 7.2.

Glass

The manufacture of glass and glass products is quite extensive in this country, and is expanding. As of about 1970, about 5% of all glass produced in the United States originated from recycled material. Practically all of this recycled material originated as clean in-house scrap glass ("cullet") from two major sources: bottle recycling, and manufacturing of sheet and plate glass. Currently, about 13 million tons of glass is discarded annually of which only about 3% is recovered (Appendix B), generally by source separation techniques.

For maximum marketability, cullet must be clean, no greater than a

000171

specified small size, and colorless (termed "flint" cullet). The market value of the recycled cullet drops dramatically when any of the above three criteria are not met, particularly the third criteria. An entire batch of new clear glass manufactured from recycled glass can be ruined by inclusion of only a small percentage of colored glass.

Given the difficulty of achieving high quality cullet by out-of-house recovery techniques, research has been devoted to finding alternative uses for low quality cullet. One possible use is to mix the cullet with other inorganics for use as a road fill, or to include the material in an asphalt mix to produce "glassphalt." This second scenario is the scenario selected for glass recycling in this work. A more extensive discussion of this scenario can be found in Section 7.3.

7.2 Recovery of Metal

There are many potential recycling scenarios which describe the pathways from metal reclamation to product use. One fairly recent reference discusses commercial recycle of radioactively contaminated scrap metals that may be recovered from decommissioned nuclear facilities via six pathways (Ref. 1). Each recycle pathway begins with pickup of a reference quantity of scrap metal (100 tons) at a decommissioning site and ends after a product made from the scrap has been used for 30 years.

The following strategy was used in Reference 1 to achieve the main objectives of the study, which were "to describe and explain a generic methodology for estimating radiation doses to individuals and to population groups from recycling radioactively contaminated scrap metals that may be reclaimed from decommissioned nuclear power plants, or any other nuclear facility."

1. Select reference materials to be assessed. The materials selected were 9×10^7g (100 tons) of each of copper wire plus tubing, ferrous sheet, ferrous pipe, and large (bulk) pieces of ferrous scrap. Each gram of metal was assumed to be contaminated homogeneously with 10 pCi of one of the 27 radionuclides considered, except for ^{90}Sr (2 pCi/g) and ^{239}Pu and ^{241}Am (0.2 pCi/g). Each radionuclide was considered separately.

2. Select common, contemporary pathways for recycling the chosen metals. Six recycle pathways were selected: (i) copper tubing into copper tubing for domestic plumbing, (ii) copper wire into copper wire for domestic wiring, (iii) ferrous sheet into stainless-steel kitchen sinks, (v) ferrous pipe into iron construction rods, and (vi) bulk iron into cast-iron frying pans.

3. Characterize each recycle pathway. Persons who might be exposed to the metals were identified and conditions under which they might be exposed were specified.

4. Calculate radiation doses to each exposed person from recycle of the appropriate reference material under the specified conditions. A complete set of calculations was made for each of the 27 radionuclides considered.

5. Divide the persons involved in each recycle pathway into functionally, or occupationally, related groups. The following 11 groups were chosen: scrap yard workers, smelter workers, persons living near smelters, and members of the general public who might be exposed to unsmelted scrap metal; slag handlers and members of the general public who might be exposed to slag from the smelters; and smelters workers, product manufacturers, product distributors, product users, and members of the general public who might be exposed to smelted, or product, metal.

6. Prepare tables of radionuclide-specific radiation-dose factors. (A radiation-dose factor is defined as the time-integrated, or total, dose to an individual or to a population group from exposures occurring during the first 30 years recovery and recycle of the reference metal.) Minimum and maximum dose factors were obtained for individuals and for functionally related population groups. (Apparently, this means those persons within a given population group receiving the lowest and highest exposures, respectively.) Individual dose factors are the minimum and maximum doses calculated separately from external and internal exposures of individuals in each of the 11 population groups (all six recycle pathways combined). Population dose factors are the minimum and maximum population doses calculated for functionally related population groups for the six recycle pathways considered separately.

One of the dose-factor tables (mentioned in above item 6) from Reference 1 is duplicated as Table 7-1. Procedures on how to use these radionuclide-specific dose-factor tables are also specified in Reference 1. The guidance given in Reference 1 specifies that the exposures are linearly proportional to the radionuclide concentration within the scrap metal.

Unfortunately, applying the information in Reference 1 to this report presents some difficulties. Some of these difficulties include the following:

1. Dose factors in Reference 1 are only calculated for 27 radionuclides while a total of 85 radionuclides are considered in this report on de minimis waste disposal. In addition, Reference 1 does not consider differing solubility classes for radionuclides, and impacts are only given in terms of whole body doses. Reference 1 does provide an algorithm to estimate the exposures to the critical organ; however, this algorithm is determined using ICRP-2 methodology while the impacts in this report are calculated using ICRP-30 methodology. These considerations may not be of special concern, however, since for most radionuclides considered in Reference 1 the dose-factors appear to be dominated by direct external radiation exposures.

000173

Table 7-1 . Dose-Factors for Recycling 90 Mg of Metal Containing 10 pCi/g of ^{14}C (a)

Population Group	Radiation dose factors					
	Individual (millirem)				Population (Person-rem)	
	External		Internal			
	Minimum	Maximum	Minimum	Maximum	Minimum	Maximum
Scrap metal						
Scrap yard	8.9E-11	2.2E-7	0	1.2E-6	3.0E-9	7.5E-9
Smelter workers	7.2E-12	2.6E-8	0	8.7E-8	2.6E-10	5.3E-10
Smelter public[b]	0	0	1.4E-12	9.8E-9	4.0E-9	2.6E-8
General public	8.2E-17	1.7E-11	0	0	4.2E-12	7.0E-12
Slag						
Slag handlers	2.7E-12	5.0E-8	0	9.7E-7		7.0E-9
General public	7.5E-9	3.9E-8	0	0		5.7E-7
Product Metal						
Smelter workers	9.7E-12	6.1E-8	0	2.8E-7	1.8E-10	6.4E-10
Product manufacturers	1.9E-12	1.6E-5	0	1.9E-6	3.4E-11	3.8E-7
Product distributors	2.4E-11	2.6E-4	0	0	1.2E-7	1.6E-5
Product users	5.9E-7	2.7E-3	0	4.5E-5	7.2E-5	2.0E-3
General public	2.1E-16	6.3E-6	0	0	2.2E-11	1.1E-3
All persons in a recycle pathway	NA	NA	NA	NA	2.1E-4	2.9E-3

(a) Source: Reference 1, Table 3.2.
(b) Internal dose factors for the smelter public are via inhalation (0%) and ingestion (100%) of soluble radionuclides.

6400
0001174

2. Dose factors in Reference 1 are calculated in a very conservative manner. Reference 1 assumes a smelter which processes 100 tons of metal per shift on a 3-shift per day and 7-day per week basis (109,500 tons/year). All of the metal processed per shift is assumed to be contaminated with radioactivity and essentially no dilution with non-radioactive metal is assumed for each succeeding step in the recycle process. Using manufacture and use of frying pans as an example, Reference 1 assumes that all the metal in one smelted batch are cast into ingots, and all ingots are transferred as a group (with no mixture with non-radioactive ingots) to a manufacturing facility. At the manufacturing facility, all radioactive ingots are manufactured into frying pans, with no mixing of other non-radioactive metal. All of the radioactive frying pans are stored together as an unmixed group, shipped to distributors in unmixed groups, and distributed to various retail facilities in smaller unmixed groups. The process is essentially repeated at successive steps until a consumer buys two frying pans and uses them continuously for 30 years, all the time scouring the pans vigorously to promote transfer of radioactivity into food. Moreover, the maximum impacts to an individual are given as the maximum exposure amongst the six pathways considered in the report.

3. The dose-factors are given on a per batch basis while the recycle of metal from de minimis waste disposal is considered in this report on a per year basis. This increases the conservatism of using Reference 1 and also means that impacts to an individual are not necessarily a linear multiple of the total activity recycled. Consider that the reference incinerator with sorting option recovers 40.5 tons of scrap metal per day for 280 days out of the year, while the Reference 1 smelter is assumed to process 100 tons of metal per shift on a 3-shift per day basis (one batch per shift). Thus, while it is theoretically possible that all of the scrap metal produced by the incinerator is smelted by the same smelter shift, it is much more likely that the scrap metal is distributed throughout all three smelter shifts. This means that one must distinguish between maximum impacts per batch and maximum impacts per year. That is, the maximum impacts per batch would be proportional to the total annual activity in the recycled scrap metal (A) divided by 280. Over a year's time, however, the contaminated scrap metal would tend to distributed over all three daily shifts, and the annual impacts to a given smelter worker would be proportional to A/3.

   The linearity assumption becomes weaker throughout successive subsequent steps involving manufacturing, handling, and consumer use. For example, if it can be indeed assumed that the radioactivity concentration in a given batch remains undiluted throughout successive processing and handling steps, then the radioactivity concentration in a iron frying pan may be conservatively assumed to be proportional to A/280. This means that the impacts to a consumer would also be proportional to A/280, since the consumer would not buy (2x280 =) 560 frying pans per year. These impacts may be compared with those for the smelter worker, which as discussed above would be proportional to A/3.

000175

4. The dose-factor tables in Reference 1 for individual and population impacts are given in terms of total exposures over 30 years. This presents particular difficulties in terms of individual impacts, since some individuals (e.g., smelter workers) would be exposed (for a given batch) for considerably less than a year while other persons (e.g., consumers) would be exposed over 30 years. This is less of a problem for population impacts, although the exposure units (person-rem/30 years) are different than those for any of the other population impacts calculated in this report (person-mrem/yr).

5. Total population impacts would probably not be realistically represented by either the maximum or minimum population dose-factors, but some average of the two.

6. Impacts are calculated as if the total charge input to a given smelter were composed of scrap metal. This will probably not be true for most smelters. As noted by Reference 1, the U.S. iron and steel industry uses three basic types of furnaces, each using scrap and other materials in different proportions. The electric furnace produces about 15% of the nation's raw steel and can accommodate virtually a 100% scrap charge. The open hearth furnace produces about 35% and can accommodate a 45% scrap charge, while the basic oxygen furnace accounts for over half of the total steel production and typically uses a 30% scrap charge. This means that the assumption of a 100% scrap charge is conservative, yet not unrealistic, for individual impacts, but probably over conservative for population impacts. A more realistic scrap charge for population impacts would probably be in the neighborhood of .15(100) + .35(45) + .5(30) = 46%.

Calculation of Impacts from Recovered Metal

It is apparent that use of the Reference 1 information in this report's calculational format requires some careful judgement. The dose-factors used in this report for individual and population impacts are listed in Table 7-2 based upon the following considerations.

(1) The reference municipal incinerator is assumed to transport all recovered contaminated scrap metal to a single smelter.

(2) Scrap yard workers are not considered in the calculations; they are assumed to be equivalent to workers at the reference municipal incinerator and have thus been already considered.

(3) Maximum individual impacts are given in terms of annual impacts (units of mrem/yr). Dose factors obtained from the Reference 1 tables are the maximum of those listed for smelter worker. This is done since smelter workers are those individuals most likely to be exposed to all metal recycled from a given incinerator; calculation of maximum exposures to other individuals in the process chain becomes much more problematical. This also avoids the problems presented by the Reference 1 batch and 30-year exposure formats.

TABLE 7-2 . Dose Factors Used in the Metal Recycling Scenarios

Nuclide	Individual (mrem/yr)	Population (person-mrem/ 30 years)	Nuclide	Individual (mrem/yr)	Population (person-mrem/ 30 years)	Nuclide	Individual (mrem/yr)	Population (person-mrem/ 30 years)
H-3	2.13E-5**	2.95E+0	Tc-99	4.63E-7	1.87E+0	Ra-226	2.59E-2	3.97E+1
C-14	3.14E-7	7.80E-1	Tc-99m	4.08E-3	1.64E+1	Ra-228	2.99E+0	1.50E+3
Na-22	7.15E-2	1.23E+3	Ru-103	8.50E-3	2.22E+0	Ac-227	1.34E+0	1.35E+3
P-32	1.96E-3	1.83E+1	Ru-106	6.10E-3	4.38E+1	Th-228	5.89E+0	9.96E+2
P-33	2.85E-4	2.66E+0	Ag-108m	4.80E-2	1.46E+3	Th-229	8.92E-1	1.38E+3
S-35	1.92E-4	1.89E+0	Ag-110m	8.89E-2	5.67E+2	Th-230	9.97E-2	9.35E+0
Cl-36	8.17E-4	2.26E+2	Cd-109	8.98E-4	8.42E+0	Th-232	8.54E-2	8.00E+0
Ca-45	2.95E-4	3.52E+0	Sn-113	8.36E-3	3.77E+1	Pa-231	1.57E-1	2.42E+2
Sc-46	6.57E-2	2.77E+2	Sn-126	6.50E-2	7.81E+3	U-232	1.13E-1	9.25E+0
Cr-51	1.07E-1	4.27E+0	Sb-124	5.91E-2	2.41E+2	U-233	1.03E-1	9.59E+0
Mn-54	2.20E-2	1.31E+2	Sb-125	3.51E-4	1.45E+1	U-234	8.80E-4	6.24E+0
Fe-55	7.30E-7	5.69E-1	I-125	1.40E-3	5.71E+0	U-235	2.71E-3	9.44E+2
Fe-59	2.60E-2	6.93E+0	I-129	9.80E-5	1.18E+1	U-236	9.57E-2	8.95E+0
Co-57	3.95E-3	2.61E+1	I-131	6.56E-4	6.11E+0	U-238	1.62E-3	2.32E+2
Co-58	1.80E-2	1.00E+1	Cs-134	4.60E-2	6.01E+2	Np-237	9.17E-1	1.54E+3
Co-60	8.20E-2	2.61E+3	Cs-135	2.40E-4	6.50E+1	Pu-236	1.23E-1	1.77E+0
Ni-59	1.53E-6	4.66E+0	Cs-136	7.02E-2	2.82E+2	Pu-238	1.17E-1	9.81E+0
Ni-63	3.80E-6	1.04E-1	Cs-137	1.90E-2	2.10E+3	Pu-239	1.10E-1	1.03E+1
Zn-65	1.40E-2	6.52E+1	Ba-140	8.81E-4	8.21E+0	Pu-240	1.10E-1	1.03E+1
Se-75	1.22E-2	5.59E+1	La-140	7.38E-2	2.96E+2	Pu-241	1.19E-6	9.51E-4
Rb-86	2.03E-3	1.89E+1	Ce-141	5.47E-4	5.08E+0	Pu-242	1.04E-1	9.68E+0
Sr-85	1.71E-2	6.98E+1	Ce-144	1.54E-3	1.11E+1	Pu-244	1.09E+0	1.68E+3
Sr-89	1.15E-4	6.39E-2	Eu-152	1.91E-3	2.70E+2	Am-241	9.00E-2	1.36E+2
Sr-90	6.25E-4	1.25E+2	Eu-154	3.72E-2	2.57E+3	Am-243	9.21E-1	1.42E+3
Zr-95	5.60E-2	2.48E+1	Yb-169	1.01E-2	4.05E+1	Cm-242	1.30E-1	3.67E-1
Nb-94	5.10E-2	6.13E+3	Pb-210	8.24E-3	8.15E+0	Cm-243	4.92E-1	5.65E+2
Nb-95	1.83E-4	1.71E+0	Po-210	1.13E-1	4.21E-1	Cm-244	1.24E-1	6.94E+0
Mo-99	1.26E-3	1.18E+1	Rn-222	6.56E+0	3.38E+2	Cm-248	1.08E-1	9.96E+0
						Cf-252	4.58E-3	1.02E+0

000127

(4) Maximum individual dose factors to smelter workers are determined by adding the maximum dose factors for external and internal exposures.

(5) Population dose factors are determined by the geometric average of the maximum and minimum dose factors presented in the Reference 1 tables for "all persons in a recycle pathway", minus the dose factors to scrap yard workers. Use of the population dose factors results in units of total person-mrem as calculated over 30 year's exposure following one year's generation of contaminated metal scrap.

(6) Reference input activity for all the radionuclides is taken to be 0.9 mCi; dose-factors for Sr-90, Pu-239, and Am-241, for which reference input activities are 0.18, 0.018, and 0.018 mCi, respectively, are converted to this reference activity by multiplying them with the ratio of 0.9 mCi and their input activities.

(7) Dose factors for radionuclides not listed in Reference 1 are determined by using four reference nuclides and the following scaling procedure: radionuclides with a mass number less than 210 are scaled to either Co-60 (those with total emitted gamma energies > 0.1 MeV and those which do not emit beta particles) using the ratios of the respective gamma energies, or Sr-90 (all the other nuclides) using the ratios of the respective beta particle energies. Radionuclides with a mass number greater than or equal to 210 are scaled to either Am-241 (those with total emitted gamma energies > 0.001 MeV and those which do not emit alpha particles) using the ratios of the respective gamma energies, or Pu-239 (all the other nuclides) using the ratios of the respective average alpha particle energies.

(8) The population dose factors for the above scaled nuclides are furthermore multiplied by a radionuclide-specific decay correction factor. This correction factor is necessary due to the fact that the decay characteristics of scaling nuclides (Co-60, Sr-90, Pu-239, and Am-241) and scaled nuclides are different. Population dose factors for the scaling nuclides contain a correction for decay (Ref. 1), and a correction for the scaled nuclides must be applied. Assuming that the total effect of decay on the population dose factor for a given nuclide can be expressed as a finite sum of exponentials, i.e.,

$$\text{Decay factor} = [1+\exp(-\lambda)+\exp(-2\lambda)+\cdots+\exp(-28\lambda)+\exp(-29\lambda)]/30$$

$$= (1 - e^{-30\lambda})/[\,30\,(1 - e^{-\lambda})] \qquad (7\text{-}1)$$

this correction factor becomes the following:

$$\text{Correction factor} = \frac{(1-e^{-30\lambda_a})\,(1-e^{-\lambda_b})}{(1-e^{-30\lambda_b})\,(1-e^{-\lambda_a})} \qquad (7\text{-}2)$$

where λ_a and λ_b are the decay constants of the scaled and scaling radionuclides, recpectively, in units of year^{-1}.

Individual and population impacts are thus calculated as follows:

$$H = \sum_n (1/3)\ (A_n/A_o)\ (1/IX3)\ F_i \qquad (7\text{-}3)$$

and

$$P_{30} = \sum_n 0.46\ (A_n/A_o)\ F_p \qquad (7\text{-}4)$$

where:

A_n = annual activity (Ci) of radionuclide n released into recycled metal from reference municipal incinerator.
A_o = reference activity (0.0009 Ci)
IX3 = number of reference facilities (see Table 2-7).
1/3 = correction factor for impacts to smelter workers.
0.46 = correction factor for population impacts (see page 7-7).

and where F_i and F_p are the individual and population dose factors listed in Table 7-2. Impacts to individuals are divided by the number of processing facilities, IX3. However, this correction is not applicable to impacts to populations.

Impacts to individuals (H) are calculated in units of mrem/yr, while impacts to populations (P_{30}) are calculated in units of person-mrem as calculated over 30 year's exposure following one year's generation of contaminated metal scrap.

Calculation of Impacts from Recycle of Metal Packages

In addition to the recycle of metal recovered from municipal incinerators, the code allows the option of recovery of metal packages as scrap. Such recovery could occur at a municipal waste incinerator, a hazardous waste incinerator, a municipal waste landfill (sanitary landfill or open dump), or a hazardous waste disposal facility, depending upon the particular treatment or disposal facility to which the waste is initially sent.

Individual and population impacts are estimated as follows:

$$H = \sum_n (1/3)\ (IK2/100)\ f_p\ (Q_n/A_o)\ (1/IX)\ F_i \qquad (7\text{-}5)$$

$$P_{30} = \sum_n 0.46\ (IK2/100)\ f_p\ (Q_n/A_o)\ F_p \qquad (7\text{-}6)$$

where all parameters, except IK2, f_p, Q_n, and IX, have been presented in equations 7-3 and 7-4.

000179

IK2 is one of the packaging indices (see Section 2.2) and denotes the fraction of waste packages recovered from the treatment or disposal facility. It is a value input by the user of the code. f_p is the fraction of the activity within a metal container that remains on the container surface after the container has been emptied. This fraction can be estimated by assuming a residual film on the inside of a container and then dividing the total volume of the residual film by the total volume of the container. Assuming a film thickness of about 0.5 mm, this results in a calculated f_p equal to about 10^{-3} for most potential waste package sizes (e.g., from 55-gallon drums to 200 ft^3 liners). Q_n is the total annual activity (curies) delivered to the treatment or disposal facility. IX stands for the number of reference facilities involved. If the packages are recycled from the reference disposal facility, i.e., the case when IP is equal to 1 (see Table 2-7), then IX is equal to IX4. Otherwise (i.e., when IP is not equal to 1), IX is equal to IX3.

Finally, it should be pointed out that this equation does not consider the dilution resulting from the potential recycle of noncontaminated metal packages from the reference facility. The authers are aware of no readily available data on this dilution, and this effect is conservatively neglected.

7.3 Recovery of Glass

There has been considerable research devoted to finding uses for recycled glass having mixed colors. The most common use appears to be to use the recycled glass as an aggregate for asphalt mixes used for road construction and conditioning. This is the approach taken for use of glass and other grit (small stones, pieces of brick or bone, etc.) recovered from the Ames, Iowa prototype solid waste recovery plant and the Altoona, Pennsylvania waste compositing facility (Refs. 2, 4). Other uses investigated have included reuse of glass bits in production of mineral wool and foam insulations, well panels, tiles, and building blocks and bricks (Refs. 2, 5). (Also see Appendix B for additional information.)

Total asphalt production in the United States has varied over the last 10-15 years (e.g., from 140 million barrels in 1976 to 173 million barrels in 1978), but totaled 141 million barrels in 1980 (592.2 million gallons). At a density of one short ton per 5.5 barrels, this corresponds to production of a total asphalt mass equal to 25.6 million tons in 1980 (Ref. 6). The paving market consumes about 75% of this product. (Asphalt is used in surfacing more than 90% of the paved roads in the United States.) (Ref. 7)

Road design, construction, and maintenance are obviously complex subjects, and there are a number of varying applications for asphalt use. The composition of the asphalt varies depending upon the application, as does the requirements for the aggregate (e.g., aggregate size, density within the asphalt, etc.). One obvious variation is that the thickness of the road surface depends upon the expected weight of traffic. Flexible

asphalt pavement thicknesses can vary from 5 in for a road handling light traffic to 10 in for a road handling heavy traffic (Ref. 7). Assuming an average road thickness of 7.5 in, an annual asphalt highway paving volume equal to 444 million gallons (0.75x592.2 million gallons), and a 50% aggregate density, this results in total road mileage equal to $17.64 \times 10^6/W$ meters, where W is the width of the road. At an average lane width equal to 11 feet (Ref. 8), this results in the equivalent paving of 2.6 million meters (1600 miles) of two-lane roads, or 1.3 million meters (800 miles) of four-lane roads. This would include new construction and maintenance of existing roads.

Given this background, individual and population exposures must be estimated for each radionuclide. This is done by assuming that the glassphalt is used in a parking lot for a busy shopping center. In performing this calculation, the following assumptions are made:

(1) Recycled glass is assumed to have a density of 0.58 g/cm^3 (see Table 4-9). It is assumed to be mixed in a weight ratio of 30:70 with sand and other materials. The density of the final product is assumed to be about 1.3 g/cm^3 (an average of 1.6 g/cm^3 for sand and other materials and 0.58 g/cm^3 for glass). The mixture is poured in a layer of 7.5 inches onto a parking lot. These assumptions result in an area of approximately 1250 m^2 per 90 metric tons of recycled glass, assuming all of the 90 tons is used to construct one parking lot.

(2) Maximum individual impacts are calculated by assuming a shopping center worker (such as a customer helper or a shopping cart retriever) who spends 2000 hours a year at the shopping center of which a conservative 10 percent is spent on top of the contaminated glassphalt. (1250 m^2 assumed above is less than one-tenth the area of a typical shopping center having parking space for 500 cars.)

(3) Population impacts are calculated using the following assumptions:

- o Average area per vehicle in the parking lot is 26 m^2 (about 10 ft by 28 ft including spaces between rows of parking spaces);
- o Average shopping trip duration per vehicle is 1 hour;
- o Average shopping trip involves 1.5 people per vehicle;
- o The shopping center is open 2500 hours/yr;
- o Average person spends 5 minutes per shopping trip on top of the recycled glassphalt; and
- o Lifetime of the parking lot is 30 years.

The equations used to calculate individual exposures (mrem/yr) and population exposures (person-mrem/30 yrs) are as follows:

$$H = \sum_n 0.3\ (A_n/90)\ p_d\ CF\ DF\ (1/IX3)\ EDF_i\ PDCF\text{-}5 \qquad (7\text{-}7)$$

$$P_{30} = \sum_n 0.3\ (A_n/90)\ p_d\ CF\ DF\ EDF_p\ PDCF\text{-}5 \qquad (7\text{-}8)$$

000181

where PDCF-5 is the pathway dose conversion factor used in direct radiation exposure calculations (see Chapter 3.0), and where

- 0.3 = Dilution factor to account for mixing of recycled glass with other materials
- A_n = annual activity (Ci) of radionuclide n released into recycled glass from reference municipal incinerator.
- 90 = base-case annual mass of glass recycled (MT)
- p_d = density of dirt (assumed to be 1.6 MT/m^3)
- CF = finite area factor (see below).
- DF = distance factor considering the thickness of the poured glassphalt parking lot.
- IX3 = number of reference facilities (see Table 2-7).
- EDF_i = individual exposure duration factor (see below).
- EDF_p = population exposure duration factor (see below).

The concepts used in developing the above equations are similar to those used in Chapter 3.0, e.g.:

$$D_w = C_w \, (p_d/p_w) \, f_c \, \text{PDCF-5} \qquad (3\text{-}12)$$

where f_c stands for the correction factors given by:

$$f_c = \text{PK CF DF EDF} \qquad (3\text{-}13)$$

The expression (C_w/p_w) in equation (3-12) has been replaced in equations (7-5) and (7-6) by the numerically identical expression $(A_n/90)$. The reason 90 MT is used instead of the annual mass of recycled glass is that the base case above uses 90 MT. f_c is replaced by the CF, DF and EDF factors. (PK is assumed to be unity.)

The factor CF can be obtained from Table 3-1 for a radius of 20 m (area of 1250 m^2) to be 0.6936. The factor DF is obtained from an expression derivable from equation (3-1), and the reasoning used in calculating DF given by equation (3-11). It is equal to the following:

$$DF = [E_2(\mu_a 1m) - E_2(\mu_a 1m + \mu_d t)]/E_2(\mu_a 1m) \qquad (7\text{-}9)$$

where exposure is assumed to occur 1 m above the parking lot, μ_a is the linear attenuation coefficient in air (assumed to be 0.0097 m^{-1}), μ_d is the linear attenuation coefficient of the glassphalt in the parking lot (assumed to be 0.1212 cm^{-1} - see Section 5.2.3, covered waste scenario) and t is the thickness of the glassphalt layer (assumed to be 7.5 inches). The resultant DF is calculated to be 0.9738.

The factors EDF_i and EDF_p embody the assumptions on specific exposure conditions detailed above. EDF_i is simply the ratio of the time spent on the recycled glassphalt to the time in one year, i.e., 0.10 x (2000/8760) = 0.0228. EDF_p is more complicated since it is in units of persons. The above assumptions on population exposures imply the following for each 90 MT of recycled glass:

- o There are about 180,000 person-trips per year: (2500 hrs/yr x 1250 m^2 x 1.5 persons/vehicle)/(26 m^2/vehicle x 1 hr/trip).

- o There are 27,000,000 person-minutes for 30 years, or about 52 person-years for 30 years (180,000 person-trips/yr x 30 years x 5 minutes/trip), spent on top of the recycled glassphalt.

Consequently, EDF_p is given by the following:

$$EDF_p = 52 \times \text{Occupancy factor} \times \text{Decay factor} \qquad (7\text{-}10)$$

The occupancy factor relates to the fact that the above calculations assume full occupancy of the parking spaces during the entire period the shopping center is open, i.e., 2500 hours/year. This is overly conservative; however, there is no readily available data. Therefore, it is assumed to be unity.

The decay factor accounts for the decay of the radionuclides during the 30 years of exposure. This factor is given by equation 7-1:

$$\text{Decay factor} = (1 - \exp[-30\lambda])/[30(1 - \exp[-\lambda])] \qquad (7\text{-}1)$$

Another conservatism in the above scenario involves the lifetime of the parking lot. It is very unusual for a parking lot to be in service during the entire period of exposure of 30 years. Frequently, parking lots have to be resurfaced every five years. Consequently, the contaminated glassphalt radiation would be attenuated through other materials. This would mean that the population impacts (P_{30}) for the glass recycle scenario could be as much as six times too conservative. However, the authors possess no data on the longetivity of parking lots, and it is not considered.

One additional item will have to be considered, and that is the contribution to population exposures of the other groups involved in the recycle pathway. In the scrap metal recycle scenarios, the product users group constituted the major population group contributing to the exposures. In this report, relying on the conservativeness of the above individual and population exposure assumptions, it will be assumed that population exposures from other groups are negligible.

000183

CHAPTER 7.0 REFERENCES

(1) O'Donnell, et.al., "Potential Radiation Dose to Man From Recycle of Metals Reclaimed From a Decommissioned Nuclear Power Plant," Oak Ridge National Laboratory, USNRC Report NUREG/CR-0134, 1978.

(2) Pavoni, J.L., J.E. Heer, Jr., D.J. Hagerty, "Handbook of Solid Waste Disposal, Material and Energy Recovery," Van Nostrand Reinhold, 1975.

(3) Funk, H.D., and S.H. Russell, "Operating Experience of the Ames Solid Waste Recovery Plant," Energy and Resource Recovery From Industrial and Municipal Solid Wastes, AIChE Symposium Series No. 162, Volume 73, 1977.

(4) Wang, L.K., and N.C. Pereira (eds.), "Handbook of Environmental Engineering, Volume 2, Solid Waste Processing and Resource Recovery," The Humana Press, 1980.

(5) Morey, B., and A. Gupta, "A Review of Resource Recovery Technology, "Energy and Resource Recovery From Industrial and Municipal Solid Wastes, AIChE Symposium Series No. 162, Volume 73, 1977.

(6) U.S. Department of Commerce, "Statistical Abstract of the United States-1981," (102 Edition), Bureau of the Census, December 1981.

(7) "Encyclopedia of Chemical Technology," Kirk-Othmer, 1963.

(8) Urquhart, L.C. (ed.), "Civil Engineering Handbook," McGraw-Hill, 1959.

8.0 COMPUTER CODES AND EXAMPLE PROBLEMS

This chapter describes the basic structure and the data requirements of the computer codes that comprise the de minimis waste radiological impacts analysis methodology. It should be stressed at the outset that the codes are intended to be "dynamic" codes. That is, more accurately descriptive modifications to the calculational methodology, such as site-specific descriptions of incineration and/or disposal practices, can and should be utilized to improve the reliability of its results. In addition, a considerable amount of user-obtained data can be supplied to the codes, and this data can also be used for increased reliability of the results. Consequently, this chapter stresses the basic outline and structure of the codes, and the definitions of the parameters required rather than the values assumed for these parameters. Representative values for these parameters (i.e., input data) that can be used have been discussed in the previous chapters and in the Appendices.

Section 8.1 outlines the basic structure of the codes and the general approach used to develop the codes. Section 8.2 discusses the data bases required, defines the individual parameters utilized, and presents the input formats for the values for these parameters. Finally, Section 8.3 presents several example problems.

8.1 Structure of the Codes

The purpose of the codes is to provide a tool for a systematic examination of the radiological impacts resulting from disposal of material contaminated with radioactive isotopes through means less restrictive than disposal at a licensed near-surface disposal facility. The calculational methodology is structured as a pair of computer codes, and the selection of a particular code depends upon the type of information desired.

To use one code, IMPACTS, the user inputs information regarding the waste physical and radiological characteristics, as well as information regarding the particular waste treatment and/or disposal methods to be considered. The code then calculates radiological impacts to individuals and populations based on calculation of movement of radioactive material through various environmental pathways.

To use the second code, INVIMPS, the user inputs information regarding the waste physical characteristics, the treatment and/or disposal technology to be considered, and a set of organ-specific "dose limitation criteria" (i.e., a set of maximum allowable dose rates to an individual). The code then determines maximum concentration limits for waste which will limit impacts to an individual to the dose limitation criteria.

The basic structure of these two codes is further discussed below.

8.1.1 IMPACTS Code

This code is designed to calculate all the impacts presented in Table 2-2. Briefly, these consist of the following for the three disposal options considered:

- Onsite treatment/disposal - offsite exposures to individuals and population resulting from incineration, disposal operations, and post-disposal scenarios including releases due to intrusion, groundwater migration, erosion, and leachate accumulation; and exposures to inadvertant intruders.

- Offsite treatment/disposal as municipal waste - same impacts as above plus onsite exposures to maximum worker and all workers from incineration (including waste sorting options) and disposal operations; exposures to maximum worker and all workers resulting from transportation; population exposures from transportation; and population exposures and maximum worker exposures resulting from recycle of part of the contaminated waste.

- Offsite treatment/disposal as hazardous waste - same impacts as the above offsite treatment/disposal as municipal waste, except that no impacts associated with waste sorting options at the hazardous waste incinerator are calculated.

In order to calculate these impacts, the code requires four distinct types of input data.

(1) Radiological fundamental dose conversion factors and other generic pathway information such as uptake factors;
(2) Treatment and/or disposal site environmental characteristics;
(3) Treatment and/or disposal technology characteristics; and
(4) Waste physical and radiological characteristics.

These four types of data are provided by data files: the first is provided by a file called TAPE1, the second and third provided by a file called TAPE2, and the fourth is provided by a file called TAPE5. The last file, TAPE5, also provides execution directives to the code in the form of decision indices. These are further discussed in Section 8.2.

Based on these data, the code calculates radiological impacts using the following subroutines:

(1) READ2 - This subroutine reads the treatment/disposal site environmental characteristics and treatment/disposal technology characteristics from TAPE2.

(2) READ5 - This subroutine reads the waste stream characteristics from TAPE5, calculates the pathway dose conversion factors from generic pathway information (including fundamental dose conversion factors) read from TAPE1, and calculates the transportation exposures.

000186

(3) SPLICE - This subroutine calculates operational impacts from incineration, sorting, and resource recovery. It also divides the waste stream into two possible substreams if so indicated. It also calculates possible impacts from recycling recovered scrap metal and glass.

(4) INTIMP - This subroutine calculates the inadvertant intruder impacts from the construction and agriculture scenarios. Intruder groundwater scenario impacts are calculated later.

(5) EXPWAS - This subroutine calculates impacts from the intruder-initiated and erosion-initiated exposed waste scenarios.

(6) OPSIMP - This subroutine calculates the onsite and offsite impacts associated with disposal operations.

(7) OVRFLO - This subroutine calculates impacts resulting from leachate accumulation in the disposal cells.

(8) GWATER - This subroutine calculates impacts resulting from groundwater migration of radioactivity at three biota access locations (intruder-well, population-well, and surface water) at 16 different times after closure of the disposal facility.

8.1.2 INVIMPS Code

This code is designed to calculate the limiting concentrations that would lead to a given set of organ-specific dose limitation criteria. In contrast with IMPACTS, this code considers only maximum individuals, i.e., maximum transportation worker, maximum incinerator worker, maximum sorting/resource recovery worker, maximum disposal facility worker, inadvertant intruder (two scenarios), maximum exposed individual from exposed waste scenarios (two scenarios), and maximum exposed individual at three groundwater access locations. These are calculated for a given treatment and/or disposal technology, i.e., one of the three discussed in Section 8.1.1. This code requires the following input data:

(1) Radiological fundamental dose conversion factors and other generic pathway information such as uptake factors;
(2) Treatment and/or disposal site environmental characteristics;
(3) Treatment and/or disposal technology characteristics;
(4) Waste physical characteristics; and
(5) Dose limitation criteria.

As can be seen, these are the same as the IMPACTS code requirements except that dose limitation criteria are required rather than waste radiological characteristics. The same TAPE1 and TAPE2 data files used by IMPACTS are also used by INVIMPS, and contain the first three of the above five types of data. The last two types are contained in TAPE5. Based on this data, the code calculates limiting radionuclide concentrations using the following subroutines:

(1) READ2 - Same subroutine used by IMPACTS.

(2) READ5 - This subroutine reads the waste physical characteristics and dose limitation criteria from TAPE5, and fundamental dose conversion factors and other generic pathway information from TAPE1, and calculates the limiting radionuclide concentrations for transportation.

(3) SPLICE - This subroutine calculates the limiting radionuclide concentrations for incineration, sorting, and resource recovery operations, as well as recycle of scrap metal and glass.

(4) INTIMP - This subroutine calculates the limiting radionuclide concentrations for the two inadvertant intruder scenarios considered: construction and agriculture.

(5) EXPWAS - This subroutine calculates the limiting radionuclide concentrations for the intruder-initiated and erosion-initiated exposed waste scenarios (water transport only).

(6) OPSIMP - This subroutine calculates the limiting radionuclide concentrations associated with disposal facility operations.

(7) OVRFLO - This subroutine calculates the limiting radionuclide concentrations for the leachate accumulation and overflow scenarios.

(8) GWATER - This subroutine calculates the limiting radionuclide concentrations at each time step at each of the three groundwater biota access locations. The minimum limiting concentrations across the time steps are determined and become the limiting concentrations for the access location.

In all the above subroutines, limiting radionuclide concentrations for each organ are calculated. The overall limiting concentration for each nuclide across all organs is then determined and printed in a summarized form.

8.2 Data Files

As discussed above, the codes require five different types of data:

(1) Radiological fundamental dose conversion factors and other generic pathway information;
(2) Treatment and/or disposal site environmental characteristics;
(3) Treatment and/or disposal technology characteristics;
(4) Waste physical and radiological characteristics; and
(5) Dose limitation criteria.

The first four of these types of data are discussed below. The fifth, dose limitation criteria, is a set of annual dose limits (mrem/year) used

000188

only by the INVIMPS code. As stated previously, TAPE1 contains the first item above, TAPE2 contains the second and third items above, and TAPE5 contains the last two items above. These tapes are discussed below. However, first a summary of the parameters organized in functional groups are presented in Tables 8-1 through 8-5.

Table 8-1 presents definitions of the decision indices discussed in Section 2.2. Table 8-2 presents definitions of the waste stream specific arrays, and Table 8-3 presents definitions of radionuclide dependent arrays. Finally, Tables 8-4 and 8-5 present definitions of facility dependent parameters and the site environment dependent parameters, respectively.

The data file structures are then presented in Tables 8-6 through 8-9. Table 8-6 presents the structure of TAPE1 containing the fundamental dose conversion factors and other generic pathway information, Table 8-7 presents the structure of TAPE2 containing treatment/disposal site environmental and technology characteristics and Tables 8-8 and 8-9 present the structure of TAPE5 for the IMPACTS and the INVIMPS codes, respectively, containing the waste characteristics and dose limitation criteria.

Finally, Table 8-10 lists the 85 radionuclides that are considered in the computer codes, along with the default solubility classes (SOLB) for each radionuclide (see Table 8-3). The radionuclides are given in the order in which they are considered in the codes.

8.3 Example Problems

This section presents example problems for the IMPACTS and INVIMPS computer codes. In a manner consistent with the general approach adopted in this chapter, the examples for IMPACTS have been selected to illustrate the mechanics and structure of the code, and not to assess whether the waste streams considered are viable candidates for disposal through less restrictive means. (One of the examples selected is natural dirt with environmentally normal levels of contamination.) Similarly, the examples selected for INVIMPS are also designed to illustrate the mechanics and structure of the code, and the results cannot necessarily be interpreted as viable maximum radionuclide concentration limitations.

The data contained in the current TAPE1 and TAPE2 data files are utilized for all example problems. These data files are listed in Appendix F and are not discussed in this section any further. TAPE5 data files for the example problems are discussed below.

8.3.1 IMPACTS Examples

Two example problems are considered. The first of these is divided into 3 cases and involves disposal of a single waste stream into a hazardous waste disposal facility potentially located in three alternative disposal

TABLE 8-1 . Decision Indices Definitions

All these indices are located in Common Block DTNX, and are read from the TAPE5 file.

IR : Region index - 1, 2, or 3.

IDAT : Additional data index; generic default data in the code will be replaced with facility- or site-specific information as follows:

0 = No additional data
1 = Only POP, POPE, XOQI, XOQO, EDFI, and EDFO data (see Table 8-4).
2 = Only PRC, TSC, DTTM, TTM, DTPC, TPC, FSC, FSA, QFC, and NRET will be given (see Table 8-5 for definitions).
3 = Both #1, and #2 will be provided.

If IQ=1, IDAT must be 2 or 3 since the user must input values for all parameters listed in the IDAT=2 option. In addition for IQ=1 the following facility specific values are needed: VINC, VANN, ADAY, EMP, EFF, SEFF, DEN1, DEN2, RMIX, GERO, OSWR, and OSDL (see Table 8-4 for definitions).

IQ : Disposal facility index (See Section 2.2.1);
1 = Generator On-site Facility,
2 = Sanitary Landfill,
3 = Open Dump,
4 = Hazardous Waste Facility I,
5 = Hazardous Waste Facility II.

If waste is processed by incineration prior to disposal (see ISPC index in Table 8-2), then IQ also indicates the type of incinerator considered. That is, IQ = 1 indicates use of the on-site incinerator, IQ = 2 or 3 indicates the use of the municipal waste incinerator, and IQ = 4 or 5 indicates the use of the hazardous waste incinerator.

IPOP : Population in the vicinity of treatment/disposal facility; 1 = rural, 2 = urban.

ILFE : Facility operational life in years

IINS : Institutional control period in years

IOFL : Index denoting whether impacts from leachate accumulation and overflow are to be calculated (IOFL = 1), or not (IOFL = 0).

NSTR : Number of de minimis waste streams to be analyzed.

ISPC : These decision indices are presented in Table 8-2.

000190

TABLE 8-2. Waste Stream Specific Arrays

BASN(2) : Waste stream name array
Location : Common Block CHRC
Read From : TAPE5

This array contains the alphanumeric descriptive names of the waste streams. Each name can be up to 10 characters long.

BAS(2,92) : Basic data matrix
Location : Common Block BAST
Read From : TAPE5

This matrix contains most of the basic information for each waste stream. Two rows (denoted by the first index) are provided in this array in the event that the waste stream is divided into substreams in accordance with the last two of the three sorting options available for municipal waste incineration (IQ = 2 or 3, and IP = 4 or 5 - see Table 2-7). In this case the information for incinerator residue is stored in the first row (i.e., the new information on incinerator residue such as new radionuclide concentrations replaces that for the original waste stream), while information for the discard portion is stored in the second row. In all other cases, waste stream information is stored in the first row, while the second row is vacant. The columns of the BAS array (denoted by the second index) refer to the following:

Index	Description
1	Total mass of the waste stream in metric tons - MT (2.2 tons) generated annually.
2	Density of the waste stream in MT/m^3 (g/cm^3).
3	Volume of the waste stream in m^3.
4	Reserved
5	Maximum individual occupational impacts (in units of mrem/year) resulting from transportation of the waste stream.
6	Total occupational exposures (in units of person-mrem/year) resulting from transportation of the waste stream.
7	Population impacts (in units of person-mrem/year) resulting from transportation of the waste stream.
8-92	Radionuclide concentrations of the waste stream (in units of Ci/MT or uCi/g) for the 85 radionuclides considered.

TABLE 8-2 (continued)

ISPC(2,15) : Waste stream decision indices
Location : Common Block BAST
Read From : TAPE5

This matrix complements the information provided in the BAS matrix, and contains waste stream specific decision indices. In a manner similar to the BAS matrix, two rows are provided for two possible substreams (see the BAS matrix discussion above). The columns of this matrix (denoted by the second index) refer to the decision indices described in Table 2-7 and are summarized below:

Index	Description
1	ID - Dispersibility index
2	IA - Accessibility index
3	IK1 - First Packaging index
4	IK2 - Second Packaging index
5	IP - Processing index
6-7	Reserved
8-11	IX's - Distribution indices
12-15	IC's - Composition indices

Alternative values for these indices are presented in Table 2-7. One item of note is that the IP index must be compatible with the IQ index (see Table 8-1). For example, if IQ is not equal to 2 or 3 (municipal waste treatment/disposal option), then IP cannot be equal to 3 through 5 (denoting the "sorting" options 1, 2, and 3, respectively).

BIMP(10,65) : Basic impacts matrix
Location : Common Block BAST
Read From : Internally calculated.

This matrix is the basic impacts matrix for the problem execution. The first index refers to the 10 different organs being considered in this report, i.e., lung, stomach wall, large lower intestine (LLI) wall, total body, kidneys, liver, red marrow, bone surface, thyroid, and ICRP total body dose equivalent. The second index refers to the following:

000192

TABLE 8-2 (continued)

Index	Description
	Post-Disposal Impacts
1	Intruder-construction scenario (mrem/yr)
2	Intruder-agriculture scenario (mrem/yr)
3	Intruder-initiated (air) exposed waste scenario (person-mrem/yr)
4	Erosion-initiated (air) exposed waste scenario (person-mrem/yr)
5	Intruder-initiated (water) exposed waste scenario (mrem/yr)
6	Erosion-initiated (water) exposed waste scenario (mrem/yr)
	Incineration Impacts
7	Population exposures from incineration (person-mrem/yr)
8	Maximum off-site individual exposures from incineration (mrem/yr)
9	Total worker exposures at incinerator facility (person-mrem/yr)
10	Maximum worker exposures at incinerator facility (mrem/yr)
	Disposal Operational Impacts
11	Population exposures from disposal operations (person-mrem/yr)
12	Maximum off-site individual exposures from disposal operations (mrem/yr)
13	Total worker exposures at disposal facility (person-mrem/yr)
14	Maximum worker exposures at disposal facility (mrem/yr)
	Groundwater Impacts
	The next set of potential impacts result from groundwater migration of radionuclides. For each of the three access locations (i.e., intruder-well, population-well, and surface water), impacts are given at the following 16 times (in years) after the closure of the facility: 20, 40, 60, 80, 100, 120, 160, 200, 400, 600, 800, 1000, 2000, 5000, 10000, and 20000.
15-30	Individual exposures at the intruder-well (mrem/yr)
31-46	Individual exposures at the population-well (mrem/yr)
47-62	Individual exposures at the surface water access location (mrem/yr)
	Leachate Accumulation Impacts
63	Leachate treatment/discharge exposures to an individual (mrem/yr)
64	Leachate overflow exposures to an individual (mrem/year)
65	Airborne exposures to population from evaporator operation (person-mrem/yr)

TABLE 8-3 . Radionuclide Dependent Arrays

NUC(85) : Radionuclide names
Location : Common Block CHRC
Read From : Internally set through data statement.

This array contains the 6 character alpha-numeric names of the nuclides. These radionuclide names are listed in Table 8-10 in the order in which they are stored in NUC array.

SOL(85) : Radionuclide solubilities
Location : Common Block CHRC
Read From : TAPE5

This array contains the 1 character alpha-numeric (W, D, Y, or *) solubilities of the nuclides.

SOLB(85) : Default radionuclide solubilities
Location : Common Block CHRC
Read From : TAPE1

This array contains the 1 character alpha-numeric (W, D, Y, or *) default solubility classes of the nuclides. The use of these default solubility classes vary somewhat depending upon whether one is using the IMPACTS or the INVIMPS code. In the IMPACTS code, the solubilities of the radionuclides considered in a particular problem are always specified in TAPE5 by the user. However, if a radionuclide happens to be a progenitor of a decay chain and the solubilities of the daughters are not provided in TAPE5 by the code user (this may be done by inputting the daughter as having a zero concentration), then the solubility classes of the daughter radionuclides are specified by SOLB. In the INVIMPS code, SOLB is used as a default in order to calculate limiting radionuclide concentrations. The code user may override SOLB values, however, and replace the default solubility classes for particular radionuclides. A limitation in the use of both codes is that only one solubility class may be considered for a given radionuclide in a given waste stream. If a waste stream contains concentrations of a particular radionuclide having two (or three) solubility classes (e.g., 1 Ci/m^3 of U-235 with solubility class Y, and 0.003 Ci/m^3 of U-235 with solubility class W), then the waste stream may be handled by dividing it into two (or three) hypothetical waste streams and summing the results. The assumed default solubility classes are given in Table 8-10.

AL(85) : Decay constants
Location : Common Block NUCS
Read From : TAPE1

This array contains the decay constants (in yr^{-1}) of the nuclides.

000194

TABLE 8-3 (continued)

FMF(85) : Leachate partition ratios
Location : Common Block NUCS
Read From : TAPE1

This array contains the radionuclide-dependent partition ratios between the radionuclide concentrations in the trench leachate and in the unsolidified waste obtained from Maxey Flats experimental data (see Section 6.3 - Table 6-5).

RET(85,5) : Retardation coefficients
Location : Common Block NUCS
Read From : TAPE1

This array contains the retardation coefficients of the radionuclides for five different soil conditions (see Section 6.3 - Table 6-7). Only RET(I,1) and RET(I,4) are read in from TAPE1; using these values the rest of the coefficients are calculated internally in subroutine READIN.

FRACT(85,3): Release fractions for incineration
Location : Common Block NUCS
Read From : Internally set through data statement.

This array gives radionuclide release fractions for three different incineration cases: municipal incinerator, hazardous waste incinerator, and open burning (see pages 4-13, 4-12, and 5-19, respectively). The release fractions for the on-site incinerator are assumed to be the same as those for the hazardous waste incinerator.

NUX(85) : Index denoting radionuclide presence
Location : Common Block NUCS
Read From : Internally set during reading of TAPE5

This array indicates whether a radionuclide is present (value of 1) or not present (value of 0) in the waste stream being analyzed.

PDCF(85,10,7) : Pathway dose coversion factors
Location : Common Block BAST
Read From : Internally calculated

This matrix contains the pathway dose conversion factors (see Appendix D) that are calculated in subroutines UPTAKE and DOSE from fundamental dose conversion factors and other generic pathway data that are read in from TAPE1. The first index is the radionuclide index. The second index is the organ index corresponding to the following: lung, stomach wall, large lower intestine (LLI) wall, total body, kidneys, liver, red marrow, bone surface, thyroid, and ICRP total body dose equivalent. The third index refers to the pathways explained in Appendix D.

TABLE 8-4 . Facility Dependent Parameters

All these facility dependent parameters, unless specified otherwise, are located in Common Block FACP. In addition, default values for these parameters are read from TAPE2 for each type of facility. For the generator on-site facility (IQ = 1), site-specific values (except for transportation related values) have to be input by the code user from TAPE2. Most arrays contain 5 rows, which correspond to the 5 option values for the decision index IQ.

It may also be noted that although the codes are currently set up so that facility dependent parameters must always be separately input by the code user for on-site disposal, the TAPE2 input file is structured so that with a few code modifications this information could be input along with the default values for the other reference facilities. This may be a useful (time saving) approach if one wished to perform multiple runs for a given site-specific facility.

TDIS(5) : Transportation distance (miles) to the facility
TVEL(5) : Transportation velocity (miles/hr) to the facility
Reference : Page 3-12

These two arrays are in units of miles for convenience. They are always used as a ratio; thus the use of non-metric units has no effect on the calculations.

VINC(5) : Annual volume incinerated (m^3/yr)
VANN(5) : Annual volume disposed (m^3/yr)
Reference : Table 2-4

XOQI(5) : Default X/Q values for waste incineration (yr/m^3)
XOQO(5) : Default X/Q values for disposal facility operations (yr/m^3)
Reference : Table 4-3 and Chapter 5

These are the X/Q values for off-site airborne transport. XOQI is usually for an elevated release while XOQO is for a ground level release.

EDFI(5) : Exposure duration factor for incineration (dimensionless)
EDFO(5) : Exposure duration factor for disposal facility operations (dimensionless)
Reference : Appendix C.5.2.3

These are the exposure duration factors for incineration and disposal facility operation, respectively. They are multiplied by appropriate X/Q values to obtain site selection factors (f_s) for airborne releases resulting in off-site individual impacts. Exposure duration factors denote the fraction of the time, while an airborne release is assumed to occur, that the individual is located in the centerline of the contaminated plume.

000196

TABLE 8-4 (continued)

DEN1(5) : Density of the waste during shipment and incineration (g/cm^3)
DEN2(5) : Average density of the waste during disposal (g/cm^3)

DEN1 is only meaningful for transportation calculations and for incineration of waste at a municipal or hazardous waste incinerator. For example, DEN1(2) denotes the average non-radioactive waste density shipped to a municipal waste incinerator, or to a sanitary landfill. DEN2 denotes the average density of the waste (radioactive plus non-radioactive) during disposal operations.

TWI(5,3) : Waste-to-air transfer factor for incinerator operations
Reference : Tables 4-7 and 4-13

TWO(5,3) : Waste-to-air transfer factor for disposal facility operations
Reference : Tables 5-6 and 5-9

The first index of the TWI and TWO arrays refers to the facility and the second index refers to low, medium, and high dust loading levels, respectively. TWI is not meaningful for hazardous waste disposal.

ADAY(5,3) : Daily exposed area (m^2)
Reference : Sections 5.2.3, 5.2.4, 5.3.3, 5.3.4, 5.5.3.2, and 5.5.4

The first index of ADAY is the facility index, and the second index is variable as follows. For the sanitary landfill and open dump, ADAY(I,1), ADAY(I,2), and ADAY(I,3) correspond to the exposed areas for off-site release calculations, for equipment operators, and for other operations personnel, respectively. For the hazardous waste facility, ADAY(I,1), ADAY(I,2), and ADAY(I,3) correspond to the exposed areas for off-site release calculations, for unpackaged waste, and for packaged waste, respectively. For the on-site disposal facility only ADAY(1,1) is meaningful and denotes the exposed area for off-site release calculations.

RMIX(5) : Cover mixing efficiency (dimensionless)
Reference : Section 6.2.1

EMP(5) : Waste emplacement efficiency (dimensionless)
EFF(5) : Volumetric disposal efficiency (m^3/m^2)
Reference : Table 6-4

SEFF(5) : Surface utilization efficiency (dimensionless)
Reference : Page 6-28

GERO(5) : Delay time for erosion (in years)
Reference : Section 6.4

TABLE 8-4 (continued)

OSWR : On-site incinerator weight reduction factor
Reference : Section 5.1

The following parameters are temporary variables used in subroutine READ2. They are read in from TAPE2 and utilized to compute some of the variables defined above and in Table 8-5.

OSDL : On-site dust loading (g/m^3)
Reference : Section 5.1

DSP(6) : Distance to center of population ring (m)
PDS(6) : Population within each population ring (people)
WSP(6) : Average wind speed for a given stability class (m/sec)
STB(6) : Fraction of a year that the given stability class occurs.
HYTI : Airborne release height for incineration (m)
HYTO : Airborne release height for disposal facility operation (m)
DISTI : Distance to maximum exposed off-site individual, incineration (m)
DISTO : Distance to maximum exposed off-site individual, disposal facility operations (m)
EDFID : Exposure duration factor for maximum exposed off-site individual, incineration
EDFOD : Exposure duration factor for maximum exposed off-site individual, disposal facility operations
Reference : Section C.5.2.3

This set of parameters are input only if the code user chooses to provide site-specific data to calculate impacts from airborne releases of radionuclides (IDAT = 1 and IDAT = 3 cases - see Table 8-1). That is, the user has the option of inputting information which is used to determine site specific XOQI, XOQO, EDFI, EDFO (see above), POP, and POPE (see Table 8-5) parameter values.

000198

TABLE 8-5 . Site Dependent Parameters

All the site dependent parameters are input from TAPE2.

The codes in their present forms permit consideration of one of three generic site environments. These include a humid site with low-permeability soils, a humid site with moderate permeability soils, and a semi-arid site with high permeability soils. These sites correspond to designations northeast, southeast, and southwest, respectively (IR = 1, 2, or 3). The user also has the option of providing site-specific values for certain site environment dependent parameters (see index IDAT). The parameters that depend on the site environmental characteristics have been outlined in Table 2-6, and are discussed below.

FSC(3) : Construction site selection factor (dimensionless)
Location : Common Block DRP1

This array (denoting f_s-construction) contains the site selection factor for the air uptake pathway of the intruder-construction scenario. It is a measure of dust mobilization and depends on environmental parameters such as antecedent moisture conditions, soil particle size distribution, and annual average wind speed,

FSA(3) : Agriculture site selection factor (dimensionless)
Location : Common Block DRP1

This array (denoting f_s-agriculture) contains the site selection factor for the air uptake pathway of the intruder-agriculture scenario. It is a measure of dust mobilization and depends on environmental parameters such as antecedent moisture conditions, soil particle size distribution, and annual average wind speed,

PRC(3,5) : Infiltrating percolation (m/yr)
Location : Common Block DRP1

This matrix contains the annual potential infiltration into the disposal cells in meters (see Section 6.3). The first index corresponds to the site, and the second index corresponds to the disposal facility index, IQ.

TSC(3,5) : Contact time fraction (dimensionless)
Location : Common Block DRP1

This matrix contains the potential contact time fraction (denoted by t sub c in the report) between the waste and the infiltrating percolation (see Table 6-6). The first index corresponds to the site, and the second index corresponds to the disposal facility index, IQ.

TABLE 8-5 (continued)

QFC(3,3) : Dilution factors
Location : Common Block DRP1

This array contains the dilution factors (Q) in units of (m^3/yr) for three groundwater access locations: intruder well, population well, and surface water (see Section 6.3.2).

DTTM(3,5) : Incremental groundwater travel times (yr)
Location : Common Block DRP1

TTM(3,3,5) : Groundwater travel times (yr)
Location : Common Block DRP1

DTTM contains the incremental travel times between the sectors of the disposal facility. TTM contains the travel times between the sector of the disposal site closest to the access locations and the three groundwater access locations mentioned above for QFC(3,3). Their values are given in Table 6-8. The first index corresponds to the site, and the last index corresponds to the disposal facility index, IQ. The second index of TTM corresponds to the access location.

DTPC(3,5) : Incremental Peclet numbers (dimensionless)
Location : Common Block DRP1

TPC(3,3,5) : Peclet numbers (dimensionless)
Location : Common Block DRP1

DTPC contains the incremental Peclet number between the sectors of the disposal facility. TPC contains the Peclet number between the sector of the disposal site closest to the access locations and the three groundwater access locations mentioned above for QFC(3,3). Their values are given in Table 6-8. The first index corresponds to the site, and the last index corresponds to the disposal facility index, IQ. The second index of TPC corresponds to the access location.

NRET(3) : Retardation status array
Location : Common Block DRP1

The values in this array indicates the condition of the soils in the vicinity of the disposal site with regards to the retardation of radionuclides. It determines which RET(85,5) will be used in the groundwater migration analysis, i.e., RET(85,NRET(IR)) is used.

000200

TABLE 8-5 (continued)

TPOP(3) : Population density (people/mile^2) around the transportation route
Location : Common Block DRP2
Reference : Section 3.3

TDOZ(3) : Dose factor (mile^2/ft^2) for transportation population exposure calculations
Location : Common Block DRP2
Reference : Section 3.3

In a manner similar to the TDIS and TVEL arrays (see Table 8-4), these two arrays are in units of miles for convenience. They are always used as a product so that the mile^2 units cancel. The unit of ft^2, however, is essential; it is cancelled by the factor 100 ft^2 in the equations used to interpolate dose rate at 10 ft to the origin. Thus, the use of non-metric units has no effect on the calculations.

WVEL(3) : Average wind speed at the site (m/sec).
Location : Common Block DRP2
Reference : Section 4.1.5

EFAC(3) : Dust mobilization rate (g/m^2-sec) for hazardous waste facility operations.
Location : Common Block DRP2
Reference : Table 5-13

POP(3) : Airborne population factor (person-yr/m^3) for treatment/disposal operations.
Location : Common Block DRP2
Reference : Sections 4.1.5 and 6.4.1

This array contains the population site selection factor POP discussed in Section 4.1.5; it is used for operational release scenarios, and for the intruder-initiated exposed waste air transport scenarios.

POPE(3) : Population factor (person-yr/m^3) for airborne exposed waste scenarios
Location : Common Block DRP2
Reference : Section 6.4.1

This array contains the site selection factor for the erosion-initiated exposed waste air transport scenario. Site-specific values of POP and POPE can be input by the user utilizing the parameters defined on the last page of Table 8-4.

TABLE 8-5 (continued)

POPW(3) : Site selection factor (yr/m^3) for waterborne exposed waste scenarios.
Location : Common Block DRP2
Reference : Section 6.4.1

This array contains the site selection factor for the intruder- and erosion-initiated exposed waste surface water transport scenarios.

AXOQ(3) : Accident atmospheric dispersion factor (yr/m^3)
Location : Common Block DRP2
Reference : Table 5-14

EERO(3) : Dust mobilization rates for erosion initiated exposed waste scenario (g/m^2-sec)
Location : Common Block DRP2
Reference : Table 6-10

EREC(3) : Dust mobilization rates for intruder initiated exposed waste scenario (g/m^2-sec)
Location : Common Block DRP2
Reference : Table 6-10

000202

TABLE 8-6 . Structure of TAPE1

Card	Columns	Format	Parameter	Definition
1	1-85	85A1	SOLB	Default solubility classes
2		A1		Label
3	1	A1	TSOL	Solubility class
to	3-8	A6	TNUC	Nuclide name
161	10-99	10E9.2	DCF1	Ingestion fundamental dose conversion factors (mrem/pCi)
162		A1		Label
163	1	A1	TSOL	Solubility class
to	3-8	A6	TNUC	Nuclide name
321	10-99	10E9.2	DCF2	Inhalation fundamental dose conversion factors (mrem/pCi)
322		A1		Label
323	1-6	A6	TNUC	Nuclide name
to	10-99	10E9.2	DCF4	Ground surface contamination fundamental dose conversion factors (mrem/yr per pCi/m^2)
407				
408		A1		Label
409	1-6	A6	TNUC	Nuclide name
to	10-99	10E9.2	DCF5	Air immersion fundamental dose conversion factors (mrem/yr per pCi/m^3)
493				
494		A1		Label
495	1-6	A6	TNUC	Nuclide name
to	10-18	E9.2	DCF3	Ground volume contamination fundamental dose conversion factors (mrem/yr per pCi/m^3)
579				
	19-63	5E9.2	FF	Uptake factors
	64-72	E9.2	AL	Decay constant
	73-81	E9.2	FMF	Leachate partition ratios
	81-99	2E9.2	RET	Retardation coefficients

TABLE 8-7 . Structure of TAPE2

Card	Columns	Format	Parameter	Definition
For each distinct site environment, the following eight input cards are required. More detailed definitions of these parameters can be found in Table 8-5. Each of the first five cards below give values for one of the treatment/disposal facilities, i.e., Card 1 refers to IQ = 1, Card 2 refers to IQ = 2, etc.				
1	1 - 10	E10.3	PRC	Infiltrating percolation
	11 - 20	E10.3	TSC	Contact time fraction
	21 - 30	E10.3	DTTM	Incremental water travel time
	31 - 60	3E10.3	TTM	Water travel times
	61 - 70	E10.3	DTPC	Incremental Peclet number
	71 -100	3E10.3	TPC	Peclet numbers
2	1 -100			Same as above for IQ = 2.
3	1 -100			Same as above for IQ = 3.
4	1 -100			Same as above for IQ = 4.
5	1 -100			Same as above for IQ = 5.
6	1 - 10	E10.3	FSC	Soil-to-air transfer factor (intruder-construction)
	11 - 20	E10.3	FSA	Soil-to-air transfer factor (intruder-agriculture)
	21 - 50	3E10.3	QFC	Dilution factor
	51 - 60	E10.3	POP	Population-weighted factor
	61 - 70	E10.3	POPE	Population-weighted factor (air)
	71 - 80	E10.3	POPW	Site selection factor (water)
	81 - 90	E10.3	TPOP	Population density along transport route
	91 -100	E10.3	TDOZ	Distance dependent dose factor
7	1 - 10	E10.3	WVEL	Average wind speed
	11 - 20	E10.3	AXOQ	Accident X/Q
	21 - 30	E10.3	EFAC	Dust mobilization factor
	31 - 40	E10.3	EERO	Mobilization rate for erosion scenario
	41 - 50	E10.3	EREC	Mobilization rate for intruder scenario
8	1 - 5	I5	NRET	Retardation index

TAPE2 currently contains data for three site environments. Consequently, the above eight cards are repeated two more times, and occupy cards 9 through 24.

The next block of data contains facility-specific parameters. For each distinct facility, the following three input cards are required. Detailed definitions of these parameters can be found in Table 8-4.

000204

TABLE 8-7 (continued)

Card	Columns	Format	Parameter	Definition
25	1 - 10	E10.3	TDIS	Transportation distance
	11 - 20	E10.3	TVEL	Transportation velocity
	21 - 30	E10.3	VINC	Annual volume incinerated
	31 - 40	E10.3	XOQI	Incineration X/Q value
	41 - 50	E10.3	EDFI	Incineration exposure duration factor
	51 - 60	E10.3	DEN1	Density of waste for transportation and at incinerator
	61 - 70	E10.3	VANN	Annual volume disposed
	71 - 80	E10.3	XOQO	Disposal operations X/Q value
	81 - 90	E10.3	EDFO	Disposal operations exposure duration factor
	91 -100	E10.3	DEN2	Density of waste during disposal
26	1 - 30	3E10.3	TWI	Incineration waste-to-air transfer factor
	31 - 60	3E10.3	TWO	Operations waste-to-air transfer factor
	61 - 90	3E10.3	ADAY	Daily exposed area
	91 -100	E10.3	RMIX	Cover mixing efficiency
27	1 - 10	E10.3	EMP	Emplacement efficiency
	11 - 20	E10.3	EFF	Disposal efficiency
	21 - 30	E10.3	SEFF	Surface disposal efficiency
	31 - 40	E10.3	GERO	Erosion delay time

TAPE2 currently contains data for five facilities. Consequently, the above three cards are repeated four more times, and occupy cards 28 through 39.

The next block contains data for the site-specific POP, POPE, XOQI, XOQO, EDFI, and EDFO options. (They are necessary in IDAT=1 or 3 cases.) TAPE2 does not normally contain these data. The block length is 7 cards. The first six cards contain (1) the distances to the center of 6 population rings, (2) the population within each ring, (3) the wind speed for one of six stability classes, and (4) the frequency within that stability class. Six cards are sufficient because by definition there are six population rings, and six stability classes. (Also see Table 8-4 and Appendix C.)

TABLE 8-7 (continued)

Card	Columns	Format	Parameter	Definition
1	1 - 10	E10.3	DSP	Distance in meters to center of the population ring
	11 - 20	E10.3	PDS	Population (persons) within the population ring
	21 - 30	E10.3	WSP	Average wind speed (m/sec) for Stability Class A
	31 - 40	E10.3	STB	Fraction of a year that the wind is in Stability Class A
2 through 6				Repeat for the next population ring and Stability Classes B through F.
7	1 - 10	E10.3	HYTI	Incineration release height
	11 - 20	E10.3	HYTO	Disposal operations release height
	21 - 30	E10.3	DISTI	Distance to off-site individual, incineration
	31 - 40	E10.3	DISTO	Distance to off-site individual, disposal operations
	41 - 50	E10.3	EDFID	Exposure duration factor for off-site individual, incineration
	51 - 60	E10.3	EDFOD	Exposure duration factor for off-site individual, disposal operations

The next block of data contains site-specific environmental parameters. They are necessary when IDAT=2 or 3, and when IQ=1. The current TAPE2 contains these cards as 40 through 42.

40	1 - 10	E10-3	PRC	Infiltrating percolation
	11 - 20	E10-3	TSC	Contact time fraction
	21 - 30	E10-3	DTTM	Incremental water travel time
	31 - 60	3E10-3	TTM	Water travel time
	61 - 70	E10-3	DTPC	Incremental Peclet number
	71 -100	3E10-3	TPC	Peclet number
41	1 - 10	E10-3	FSC	Soil-to-air transfer rate (intruder-construction)
	11 - 20	E10-3	FSA	Soil-to-air transfer rate (intruder-agriculture)
	21 - 50	3E10-3	QFC	Dilution factor
	51 - 60	E10-3	WVEL	Average wind velocity
	61 - 70	E10-3	AXOQ	Accident X/Q
	71 - 80	E10-3	EFAC	Dust mobilization factor
42	1 - 5	I5	NRET	Retardation index

000206

TABLE 8-7 (continued)

The next block of data contains facility-specific operational parameters. They are necessary when IDAT=2 or 3 and when IO=1. The current TAPE2 contains these cards as 43 and 44.

Card	Columns	Format	Parameter	Definition
43	1 - 10	E10.3	VINC	Annual volume incinerated
	11 - 20	E10.3	VANN	Annual volume disposed
	21 - 50	3E10.3	ADAY	Daily exposed area
	51 - 60	E10.3	EMP	Emplacement efficiency
	61 - 70	E10.3	EFF	Disposal efficiency
	71 - 80	E10.3	SEFF	Surface disposal efficiency
	81 - 90	E10.3	DEN1	Density of waste before disposal
	91 -100	E10.3	DEN2	Density of waste during disposal
44	1 - 10	E10.3	RMIX	Cover mixing efficiency
	11 - 20	E10.3	GERO	Erosion delay time (years)
	21 - 30	E10.3	OSWR	On-site incinerator weight reduction factor
	31 - 40	E10.3	OSDL	On-site operational dust loading

TABLE 8-8 . Structure of TAPE5 for IMPACTS

Card	Columns	Format	Parameter	Definition
1	1 - 3	I3	IR	Region index
	4 - 6	I3	IDAT	Treatment/disposal environment index
	7 - 9	I3	IQ	Facility index
	10 - 12	I3	NSTR	Number of waste streams
	13 - 15	I3	IPOP	Facility environment index
	16 - 18	I3	ILFE	Life span of facility
	19 - 21	I3	IINS	Institutional control period
	22 - 24	I3	IOFL	Overflow index

Repeat next block of data NSTR times.

1	1 - 10	A10	BASN	Waste stream name
	11 - 20	E10.3	BAS(1)	Total mass of waste stream
	21 - 30	E10.3	BAS(2)	Density of waste stream
	31 - 40	E10.3	BAS(3)	Volume of waste stream
2	1 - 75	15I5	ISPC	Waste stream decision indices

For each waste stream, repeat next card of data as many times as needed to specify all radionuclide concentrations. Each card contains up to five radionuclides, their solubilities, and their concentrations. The last radionuclide to be read must be blank. That is, if there were five radionuclides one card would suffice; however, another blank card must be inserted since the last nuclide read must contain a blank name. The radionuclide names must also match those listed in Table 8-10.

1	1 - 6	A6	NUCD	Nuclide name
	7			Blank
	8	A1	SOL	Solubility class
	9 - 18	E10-3	BAS	Nuclide concentration
	19 - 20			Blank
	21 - 40			Same for the second nuclide.
	41 - 60			Same for the third nuclide.
	61 - 80			Same for the fourth nuclide.
	81 -100			Same for the fifth nuclide.

It may be also noted that the solubility classes input above by the code user always override the default solubility classes specified in the array SOLB. If the concentration of a particular radionuclide is assumed to be zero, yet it is also known that it will ultimately ingrow as a daughter of another radionuclide whose concentration is specified by the user, then the solubility class of the daughter may be optionally specified by the code user. This can be done by inputting the daughter as having zero concentration. Otherwise, impacts from the daughter would be calculated using the default solubility class in SOLB.

000208

TABLE 8-9 . Structure of TAPE5 for INVIMPS

Card	Columns	Format	Parameter	Definition
1	1 - 3	I3	IR	Region index
	4 - 6	I3	IDAT	Disposal/treatment index
	7 - 9	I3	IQ	Facility index
	10 - 12	I3	IPOP	Facility environment index
	13 - 15	I3	ILFE	LIfe span of facility
	16 - 18	I3	IINS	Institutional control period
	19 - 21	I3	IOFL	Overflow index
	22 - 24	I3	NSOL	Solubility class override index
2	1 - 10	A10	BASN	Waste stream name
	11 - 20	E10.3	BAS(1)	Total mass of waste stream
	21 - 30	E10.3	BAS(2)	Density of waste stream
	31 - 40	E10.3	BAS(3)	Volume of waste stream
3	1 - 75	15I5	ISPC	Decision indices
4	1 -100	10E10.3	DLC	Dose limitation criteria

The next block contains NSOL cards. It is necessary if the code user would like to modify some of the radionuclide default solubility classes (see Table 8-10) for a specific case. One radionuclide per card is required.

1 - 6	A6	NUCD	Alpha-numeric radionuclide name
8	A1	SOLD	Radionuclide solubility

The new solubility classes are stored in array SOL (see Table 8-3).

TABLE 8-10 . Radionuclide Names and Solubility Classes

Nuclide	Sol.	Nuclide	Sol.	Nuclide	Sol.	Nuclide	Sol.
H-3	*	Sr-85	Y	Cs-134	D	Pa-231	Y
C-14	*	Sr-89	Y	Cs-135	D	U-232	Y
Na-22	D	Sr-90	Y	Cs-136	D	U-233	Y
P-32	W	Zr-95	Y	Cs-137	D	U-234	Y
P-33	W	Nb-94	Y	Ba-140	D	U-235	Y
S-35	W	Nb-95	Y	La-140	W	U-236	Y
Cl-36	W	Mo-99	Y	Ce-141	Y	U-238	Y
Ca-45	W	Tc-99	W	Ce-144	Y	Np-237	Y
Sc-46	Y	Tc-99M	W	Eu-152	W	Pu-236	Y
Cr-51	Y	Ru-103	Y	Eu-154	W	Pu-238	Y
Mn-54	W	Ru-106	Y	Yb-169	Y	Pu-239	Y
Fe-55	Y	Ag-108[a]	Y	Pb-210	W	Pu-240	Y
Fe-59	Y	Ag-110[a]	Y	Po-210	W	Pu-241	Y
Co-57	Y	Cd-109	Y	Rn-222	*	Pu-242	Y
Co-58	Y	Sn-113	W	Ra-226	W	Pu-244	Y
Co-60	Y	Sn-126	W	Ra-228	W	Am-241	Y
Ni-59	W	Sb-124	W	Ac-227	Y	Am-243	Y
Ni-63	W	Sb-125	W	Th-228	Y	Cm-242	Y
Zn-65	Y	I-125	D	Th-229	Y	Cm-243	Y
Se-75	W	I-129	D	Th-230	Y	Cm-244	Y
Rb-86	D	I-131	D	Th-232	Y	Cm-248	Y
						Cf-252	Y

(a) These nuclides are actually Ag-108m and Ag-110m.

000210

site environments. This example problem illustrates the effects of different treatment/disposal site environmental characteristics on long-term impacts of de minimis waste disposal. The waste stream is assumed to have physical and radiological characteristics corresponding to spent ion exchange resins (and filter media) generated during cleanup of fluids in secondary coolant loops of pressurized water reactors. The second example problem illustrates impacts from waste incineration, recycle, and disposal by a less adequate disposal method (an open dump), and also illustrates how the code can be used to consider two or more waste streams simultaneously. The waste streams considered include a compressible trash waste stream and bulk quantities of ordinary dirt.

The TAPE5 input file for these two examples is presented in Table 8-11. Background information for each example problem is provided below.

8.3.1.1 Problem Statement

Example 1: Hazardous Waste Facility - II

In this example, a single waste stream (NSTR = 1) is assumed to be disposed into a hazardous waste facility. A somewhat higher level of rainwater percolation into the disposed waste is assumed, which could possibly be the case for a disposal facility operating under interim status requirements under RCRA (IQ = 5). The disposal facility is assumed to be located in a rural setting (IPOP = 1) in each of the three disposal site environments (IR = 1 : southeast, IR = 2 : midwest, and IR = 3 : southwest), and leachate accumulation impacts are calculated (IOFL = 1) for the first two sites, but not for the third site. The disposal facility is assumed to operate for 20 years (ILFE = 20) and have a 30 year institutional control period (IINS = 30). Default parameter values for facility and disposal site environmental characteristics are used (IDAT = 0).

The waste stream consists of ion exchange resins (and filter media) from secondary coolant loops from pressurized water reactors. Eighty MT of resins having an average density of 1 gm/cm^3 are assumed to be generated annually, which is about the annual mass of this waste projected to generated within a single NRC region (see Appendix E). The waste stream is assumed to be only moderately dispersable (ID = 2), and it is assumed to be composed of non-combustible material containing no activated metal (IA = 1) nor any contaminated metal or glass fractions (IC's = 0, 0, 0, 100). Radionuclide concentrations are given in units of Ci/MT (μCi/g) and are assumed to correspond to those provided in Appendix E.

The resins are further assumed to be distributed through 5 hazardous waste disposal facilities (IX4 = 5). Ten waste shipment vehicles are used (IX1 = 10), and each shipment containing the resin waste is assumed to consist totally of resin waste (IX2 = 100). No waste incineration is assumed to take place prior to disposal (IP = 1 and IX3 = 1). The waste is assumed to be transported to the disposal facility in metal packages (IK1 = 1). Half of these metal packages are assumed to be recovered at the hazardous waste facility and recycled as scrap metal (IK2 = 50).

TABLE 8-11 . TAPE5 for IMPACTS Example Problems

```
  1  0  5  1  1 20 30  1
SEC-RESINS      80.00        1.0      80.00
   2    1    1    50    1   -1   -1   10  100    0    5    0    0    0  100
H-3    *  1.15E-04  C-14    *  4.25E-06  CR-51  Y  1.33E-03  MN-54  W  2.36E-05  FE-55  Y  2.08E-05
FE-59  Y  6.62E-05  CO-58  Y  3.92E-05  CO-60  Y  4.03E-05  ZN-65  Y  9.12E-06  NI-59  W  2.49E-08
NI-63  W  7.66E-06  SR-90  Y  8.42E-06  NB-94  Y  7.86E-10  ZR-95  Y  2.69E-05  TC-99  W  3.58E-08
RU-103 Y  9.37E-05  AG-110 Y  5.88E-05  I-129  D  1.06E-07  CS-134 D  3.19E-04  CS-135 D  3.58E-08
CS-137 D  9.54E-04  CE-141 Y  1.33E-04  CE-144 Y  1.47E-04  PU-238 Y  7.29E-06  PU-239 Y  3.69E-06
PU-241 Y  1.61E-04  PU-242 Y  8.08E-09  AM-241 Y  8.54E-06  AM-243 Y  5.76E-07  CM-242 Y  1.61E-05
CM-243 Y  3.94E-09  CM-244 Y  4.42E-06                                                                $
  2  0  5  1  1 20 30  1
SEC-RESINS      80.00        1.0      80.00
   2    1    1    50    1   -1   -1   10  100    0    5    0    0    0  100
H-3    *  1.15E-04  C-14    *  4.25E-06  CR-51  Y  1.33E-03  MN-54  W  2.36E-05  FE-55  Y  2.08E-05
FE-59  Y  6.62E-05  CO-58  Y  3.92E-05  CO-60  Y  4.03E-05  ZN-65  Y  9.12E-06  NI-59  W  2.49E-08
NI-63  W  7.66E-06  SR-90  Y  8.42E-06  NB-94  Y  7.86E-10  ZR-95  Y  2.69E-05  TC-99  W  3.58E-08
RU-103 Y  9.37E-05  AG-110 Y  5.88E-05  I-129  D  1.06E-07  CS-134 D  3.19E-04  CS-135 D  3.58E-08
CS-137 D  9.54E-04  CE-141 Y  1.33E-04  CE-144 Y  1.47E-04  PU-238 Y  7.29E-06  PU-239 Y  3.69E-06
PU-241 Y  1.61E-04  PU-242 Y  8.08E-09  AM-241 Y  8.54E-06  AM-243 Y  5.76E-07  CM-242 Y  1.61E-05
CM-243 Y  3.94E-09  CM-244 Y  4.42E-06                                                                $
  3  0  5  1  1 20 30  0
SEC-RESINS      80.00        1.0      80.00
   2    1    1    50    1   -1   -1   10  100    0    5    0    0    0  100
H-3    *  1.15E-04  C-14    *  4.25E-06  CR-51  Y  1.33E-03  MN-54  W  2.36E-05  FE-55  Y  2.08E-05
FE-59  Y  6.62E-05  CO-58  Y  3.92E-05  CO-60  Y  4.03E-05  ZN-65  Y  9.12E-06  NI-59  W  2.49E-08
NI-63  W  7.66E-06  SR-90  Y  8.42E-06  NB-94  Y  7.86E-10  ZR-95  Y  2.69E-05  TC-99  W  3.58E-08
RU-103 Y  9.37E-05  AG-110 Y  5.88E-05  I-129  D  1.06E-07  CS-134 D  3.19E-04  CS-135 D  3.58E-08
CS-137 D  9.54E-04  CE-141 Y  1.33E-04  CE-144 Y  1.47E-04  PU-238 Y  7.29E-06  PU-239 Y  3.69E-06
PU-241 Y  1.61E-04  PU-242 Y  8.08E-09  AM-241 Y  8.54E-06  AM-243 Y  5.76E-07  CM-242 Y  1.61E-05
CM-243 Y  3.94E-09  CM-244 Y  4.42E-06                                                                $
  2  0  3  2  2 20  0  1
TRASH           100.         0.5       200.
   2    1    0    0    5   -1   -1   32   10    4   16   50   20   20   10
H-3    *  1.15E-04  C-14    *  4.25E-06  CR-51  Y  1.33E-03  MN-54  W  2.36E-05  FE-55  Y  2.08E-05
FE-59  Y  6.62E-05  CO-58  Y  3.92E-05  CO-60  Y  4.03E-05  ZN-65  Y  9.12E-06  NI-59  W  2.49E-08
NI-63  W  7.66E-06  SR-90  Y  8.42E-06  NB-94  Y  7.86E-10  ZR-95  Y  2.69E-05  TC-99  W  3.58E-08
RU-103 Y  9.37E-05  AG-110 Y  5.88E-05  I-129  D  1.06E-07  CS-134 D  3.19E-04  CS-135 D  3.58E-08
CS-137 D  9.54E-04  CE-141 Y  1.33E-04  CE-144 Y  1.47E-04  PU-238 Y  7.29E-06  PU-239 Y  3.69E-06
PU-241 Y  1.61E-04  PU-242 Y  8.08E-09  AM-241 Y  8.54E-06  AM-243 Y  5.76E-07  CM-242 Y  1.61E-05
CM-243 Y  3.94E-09  CM-244 Y  4.42E-06                                                                $
CON-DIRT        500.         1.6       312.5
   3    1    0    0    1   -1   -1    3  100    0    1    0    0    0  100
U-238  Y  5.95E-07  U-234  Y  5.95E-07  TH-230 Y  5.95E-07  RA-226 W  5.95E-07  RN-222 *  5.95E-07
PO-210 W  5.95E-07  PB-210 W  5.95E-07  U-235  Y  2.75E-08  PA-231 Y  2.75E-08  AC-227 Y  2.75E-08
TH-232 Y  9.81E-07  TH-228 Y  9.81E-07  RA-228 W  9.81E-07                                            $
```


000212

Example 2: Incineration/Open Dump

In this example, two de minimis waste streams, combustible trash and bulk quantities of dirt (NSTR = 2), are assumed to be disposed into an open dump (IQ = 3), with the trash waste stream being first incinerated in a municipal incinerator.

These treatment and disposal facilities are assumed to be located in an urban setting (IPOP = 2) having the southeast site environmental characteristics (IR = 2). The open dump is conservatively assumed to operate for 20 years (ILFE = 20) and have a negligible institutional control period (IINS = 0) following closure. Default parameter values for facility and disposal site environmental characteristics are used (IDAT = 0). Leachate accumulation impacts are calculated (IOFL = 1).

The combustible trash waste stream is assumed to have an average density of 0.5 g/cm^3 (0.5 MT/m^3), and to be generated at an annual rate of 100 MT/yr. This waste stream is assumed to be only moderately dispersible (ID = 2), and have a composition as follows: 50% combustible, 20% metal, 20% glass, and 10% other material (IC's = 50, 20, 20, 10). Radionuclide concentrations for this waste stream are assumed to correspond to those used in Example 1 for pressurized water reactor secondary coolant system ion exchange resins. The radionuclide content is assumed to be derived from surface contamination of materials rather than by activation (IA=1).

The dirt waste stream is assumed to have an average density of 1.6 g/cm^3, and to be generated at an annual rate of 500 MT/yr. This waste stream is assumed to be highly dispersible (ID = 3), and have no combustible metal or glass component (IC's = 0, 0, 0, 100). By definition, the waste stream does not include any activated metals (IA = 1). Radionuclides within this waste stream correspond to those typically found in natural soil (i.e., U-235, U-238, and Th-232 decay chain series) in concentrations typical of natural soil (Refs. 1,2,3). This is done as an aid in assessing the reasonableness of the calculational methodology. The radionuclides considered and their concentrations (μCi/g) are given in Table 8-12, along with the solubility classes assumed for this example.

TABLE 8-12 . Natural Dirt Radionuclides and Concentrations

Nuclide and Solubility		Concentration (μCi/g)	Nuclide and Solubility		Concentration (μCi/g)
Pb-210	W	5.95×10^{-7}	Th-230	Y	5.95×10^{-7}
Po-210	W	5.95×10^{-7}	Th-232	Y	9.81×10^{-7}
Rn-222	*	5.95×10^{-7}	Pa-231	Y	2.75×10^{-8}
Ra-226	W	5.95×10^{-7}	U-234	Y	5.95×10^{-7}
Ra-228	W	9.81×10^{-7}	U-235	Y	2.75x10-8
Ac-227	Y	2.75×10^{-8}	U-238	Y	5.95×10^{-7}
Th-228	Y	9.81×10^{-7}			

Differences are assumed in the manner in which the two waste streams are transported to the treatment/disposal facilities, and in the extent of waste treatment prior to disposal. Both waste streams are assumed to be transported in an unpackaged form (IK1 = 0); however, the trash waste stream is first delivered to municipal incinerators, with the residue from combustion being disposed in nearby open dumps. The municipal incinerators recycle scrap metal and glass recovered from input waste (sorting option no. 3 - IP = 5). The dirt waste stream is delivered directly to the open dumps (IP = 1).

Delivery of the trash waste stream is assumed to be distributed equally through 32 transport vehicles, and only 10% of a vehicle load, when carrying the de minimis waste, is actually assumed to consist of de minimis waste. (That is, an average load involving transport of the de minimis waste stream consists of 10% de minimis waste and 90% other non-radioactive waste). The waste is furthermore distributed through 4 municipal incinerators and the incinerator residue is distributed through 16 disposal facilities (IX's = 32, 10, 4, 16). The bulk dirt waste stream, on the other hand, is always assumed to be delivered as a full load (a transport vehicle containing this waste contains no other type of waste). This waste stream is delivered in three transport vehicles to a single open dump facility (IX's = 3, 100, 0, 1).

8.3.1.2 Problem Results

A shortened summary of the results for IMPACTS Example 1 is presented as Table 8-13, while a summary of the results for IMPACTS Example 2 is presented as Table 8-14. All impacts in the two tables are presented for the whole body. The complete problem results, including results for most impact scenarios for 9 additional human organs, are given in Appendix G.

IMPACTS Example 1 involved disposal of pressurized water reactor secondary coolant system ion exchange resins into hazardous waste disposal facilities located in three different disposal site environments. The results of most impact scenarios, including those for disposal facility operation, inadvertent intrusion, exposed waste (initiated by intrusion or erosion), and groundwater, appear to be fairly low. The only significant impacts appear to be those associated with waste transportation.

Waste transportation impacts are calculated assuming that only two vehicles are used to transport the waste to each hazardous waste facility. Each vehicle transports 8 MT of de minimis waste per year, and each de minimis waste shipment consists of a full load of de minimis waste. The average transport distance per trip is assumed to be 100 miles for each site environment. As a result of these conservative assumptions, the impacts to the maximum exposed transport worker is determined to be approximately 5 mrem/yr (whole body). These impacts are entirely due to direct (external) gamma radiation.

A question may also be raised regarding a possible transportation accident situation in which the waste may be dispersed into the air, resulting in

000214

TABLE 8-13 . Summary of Impacts for IMPACTS Example 1

Impact Scenarios	Units*	Site Environment: Northeast	Southeast	Southwest
Transportation:				
Maximum worker	a	4.7 E+0	4.7 E+0	4.7 E+0
All workers	b	9.4 E+1	9.4 E+1	9.4 E+1
Population along route	b	6.4 E+2	1.7 E+2	9.4 E+0
Disposal Facility Operation:				
Off-site individual	a	4.5 E-12	6.5 E-12	1.9 E-12
Maximum worker	a	2.8 E-1	2.8 E-1	2.8 E-1
All workers	b	4.8 E+1	4.8 E+1	4.8 E+1
Leachate treatment	a	6.2 E-7	3.7 E-6	--
Intruder:				
Construction scenario	a	1.2 E-2	1.2 E-2	1.3 E-2
Agriculture scenario	a	2.4 E-2	2.4 E-2	2.4 E-2
Exposed Waste:				
Intruder water	a	7.1 E-7	7.1 E-7	--
Intruder airborne	b	1.6 E-4	6.7 E-5	1.4 E-4
Erosion water	a	3.2 E-5	3.2 E-5	--
Erosion airborne	b	3.3 E-2	3.2 E-4	1.3 E-2
Ground Water:				
Intruder well	a	9.0 E-9	7.8 E-8	4.2 E-11
Population well	a	1.3 E-9	3.0 E-8	9.9 E-13
Surface water	a	3.5 E-11	9.2 E-10	--
Leachate Accumulation:				
Overflow	a	1.2 E-4	2.9 E-4	--
Evaporation	b	1.8 E-2	1.5 E-2	--
Metal Package Recycle:				
Maximum individual	a	5.7 E-4	5.7 E-4	5.7 E-4
Population	c	4.8 E+1	4.8 E+1	4.8 E+1

* a: mrem/yr; b: person-mrem/yr; c: person-mrem/30 yrs.
All impacts are for the total body.

TABLE 8-14 . Summary of Impacts for IMPACTS Example 2

Impact Scenarios	Units*	Waste Stream: Trash	Cont. Dirt	Total
Transportation:				
Maximum worker	a	1.2 E+0	7.0 E-2	--
All workers	b	7.3 E+1	4.2 E-1	7.3 E+1
Population along route	b	4.8 E+1	2.7 E-1	4.8 E+1
Incinerator Operation:				
Off-site individual	a	8.7 E-5	--	8.7 E-5
Off-site population	b	1.2 E+1	--	1.2 E+1
Maximum worker	a	3.9 E-1	--	3.9 E-1
All workers	b	5.8 E+1	--	5.8 E+1
Disposal Facility Operation:				
Off-site individual	a	2.0 E-2	1.3 E-1	1.5 E-1
Off-site population	b	5.1 E+1	2.1 E+1	7.3 E+1
Maximum worker	a	1.8 E-1	5.6 E-2	2.4 E-1
All workers	b	2.9 E+0	5.6 E-2	3.0 E+0
Leachate treatment	a	3.5 E-7	1.5 E-4	1.5 E-4
Intruder:				
Construction scenario	a	4.7 E-2	1.5 E-2	7.2 E-2
Agriculture scenario	a	2.0 E-1	1.8 E-1	3.8 E-1
Exposed Waste:				
Intruder water	a	2.7 E-6	8.6 E-6	1.1 E-5
Intruder airborne	b	4.4 E-3	2.4 E-3	6.8 E-3
Erosion water	a	1.2 E-5	6.9 E-4	7.1 E-4
Erosion airborne	b	2.8 E-3	3.5 E-3	6.3 E-3
Ground Water:				
Intruder well	a	3.6 E-7	1.6 E-4	1.6 E-4
Population well	a	1.0 E-8	8.0 E-6	8.0 E-6
Surface water	a	5.2 E-10	4.7 E-8	4.7 E-8
Leachate Accumulation:				
Overflow	a	2.7 E-4	1.1 E-2	1.1 E-2
Evaporation	b	7.8 E-2	2.0 E-2	9.8 E-2
Recycle:				
Metal - max. ind.	a	3.2 E-1	--	3.2 E-1
Metal - population	c	2.2 E+4	--	2.2 E+4
Glass - max. ind.	a	3.3 E+0	--	3.3 E+0
Glass - population	c	9.5 E+3	--	9.5 E+3

* a: mrem/yr; b: person-mrem/yr; c: person-mrem/30 yrs.
All impacts are for the total body.

000216

potential impacts due to inhalation and immersion. Such potential impacts would probably not be any larger than those calculated for disposal facility operation. Since the waste is packaged, impacts for hazardous waste facility operation include a scenario for which a waste package (a 55 gallon drum) is dropped from a height, breaks open and disperses some of its contents into the air (one such accident per year per disposal facility). This impact scenario would be very similar to a postulated transportation accident scenario, and would also include impacts to workers from being in proximity to the waste during waste disposal operations. The impacts in this case were only about 0.3 mrem/yr.

One must be careful in comparing impacts due to groundwater migration to those for leachate accumulation, since one or the other would probably occur, but not both. Assuming that the disposal facility is located in a humid site having very impermeable soils (e.g., the northeast site), or is equipped with a functional liner, then leachate accumulation impacts may be more likely. Assuming that the disposal facility is located in a humid site having moderately permeable soils (e.g., the southeast site) and is not equipped with a functional liner, then groundwater migration impacts may be more likely. In any case, both groundwater migration impacts and leachate accumulation impacts are extremely low.

It may be noticed that leachate accumulation impacts are not determined for the southwest site, nor are any impacts involving surface flow or groundwater migration to a nearby surface stream. This is because of the semi-arid nature of the southwest site, and because the nearest "stream bed" to the southwest site is normally dry.

IMPACTS Example 2 in Table 8-14 involves disposal of two waste streams, trash and contaminated dirt, in an open dump located in the southeast site environment. The trash is incinerated prior to disposal, however, and the metal and glass content in the waste is assumed to be recovered as scrap for recycle. The largest impacts for the trash waste stream appear to be those associated with waste transportation and recycle of the glass scrap.

Transportation impacts are on the order of 1 mrem/year, and for the trash stream are based on the use of 32 transport vehicles transporting waste an average of 10 miles per trip. Only 10% of the vehicle load consists of de minimis waste. Impacts from possible transportation accidents are again believed to be on the order of those for operations at the hazardous waste facility discussed above for IMPACTS Example 1.

Impacts from recycling the glass portion of the trash waste stream are determined in a very conservative manner to be on the order of 3.3 mrem/yr to the maximum exposed individual.

Impacts for the dirt waste stream are also presented in Table 8-14, as well as the total impacts. The dirt waste stream contains radionuclides in concentrations which typically occur naturally in soil, and so are a measure of the conservativeness of the calculational methodology. Total individual impacts associated with the disposal facility (operations,

inadvertent intruder, exposed waste, etc.) are determined assuming that the dirt is disposed into one of the four disposal facilities receiving the residue from incineration of the trash waste stream. For waste transportation, however, different individuals are assumed to be involved in transporting dirt than those involved in transporting trash.

8.3.2 INVIMPS Examples

Two example problems are again selected to illustrate the INVIMPS code. In these example problems, a single hypothetical waste stream is considered which is assumed to be extremely dispersible yet have a significant metal/glass component. (This is not particularly realistic but is assumed to illustrate an extreme case for purposes of determining maximum radionuclide concentrations). In the first example, the waste stream is assumed to be packaged and transported to a hazardous waste disposal facility (HWF-I). In the second example, the waste stream is assumed to be transported to a municipal incinerator where recovery of scrap metal and glass is carried out. The incinerator residue is disposed in a number of nearby sanitary landfills. These two examples illustrate the differences in maximum radionuclide concentrations that result from considering alternative waste treatment and disposal options within a given environmental setting.

In both example problems, the dose limitation criteria is assumed to be 25 millirem/yr to each of the organs considered. That is, each organ is assumed to be limited to 25 millirem/yr for each of the impact scenarios used to calculate limiting radionuclide concentrations.

In addition, default solubility classes are used for all of the 85 radionuclides considered. However, for illustration purposes, NSOL (see Table 8-9) is set equal to 2, and two radionuclides which have a single solubility class are input as if the solubility class was being changed. These two radionuclides are Sc-46, and Cs-137.

The TAPE5 input file for these two examples is presented in Table 8-15.

8.3.2.1 Problem Statement

<u>Example 1: Hazardous Waste Facility - I</u>

In this example, waste disposal is assumed to be in a hazardous waste landfill facility. Compared with the hazardous waste facility considered in the above Section 8.3.1.1, a somewhat lower level of rainwater percolation into the disposed waste is assumed (IQ = 4). The landfill facility is assumed to be located in a rural setting (IPOP = 1) in the southeast site environment (IR = 2). The disposal facility is assumed to operate for 20 years (ILFE = 20) and have a 30 year institutional control period (IINS = 30). Default values for facility and disposal site environmental characteristics are used (IDAT = 0). Impacts from possible leachate accumulation and overflow are considered (IOFL = 1).

000218

TABLE 8-15 . TAPE5 for INVIMPS Example Problems

```
  2  0  4  1 20 30  1  2
HWF-I          100.      1.0      100.
    3    1    1   50    1   -1   -1    4  100    0    1   50   20   20   10
       25.       25.       25.       25.       25.       25.       25.       25.       25.       25.
SC-46  Y
CS-137 D
  2  0  2  1 20  5  1  2
INC/SLF        100.      1.0      100.
    3    1    0    0    5   -1   -1    4  100    1    4   50   20   20   10
       25.       25.       25.       25.       25.       25.       25.       25.       25.       25.
SC-46  Y
CS-137 D
```


6400

000219

The particular type of facility generating the de minimis waste stream is not specified. However, for this example this hypothetical waste stream (NSTR = 1) is assumed to be extremely dispersible (ID = 3) and have the following composition: 50% combustible, 20% metal, 20% glass, and 10% other material (IC's = 50, 20, 20, 10). Radionuclide contamination is assumed to be by surface contamination rather than by activation (IA=1). The waste stream is assumed to have an average density of 1 g/cm^3 and to be generated at an annual rate of 100 MT/yr.

Only four transport vehicles are assumed to be used to transport the waste to the disposal facility, and each shipment containing the contaminated material is assumed to consist totally of de minimis waste. The waste is all assumed to be delivered to a single disposal facility, and no waste processing by incineration is assumed (IX's = 4, 100, 0, 1; and IP = 1). The waste is furthermore assumed to be all delivered in metal packages (IK1 = 1). Half of these metal packages are assumed to be recovered as scrap for recycle (IK2 = 50).

Example 2: Incineration/Sanitary Landfill

In this example, the hypothetical waste stream is assumed to be transported to a municipal incinerator where metal and glass are recovered for sale as scrap (IP = 5). The residue from combustion is disposed into nearby sanitary landfills (IQ = 2). These treatment and disposal facilities are again assumed to be located in a rural setting (IPOP = 1) in the southeast site environment (IR = 2). The landfill is assumed to operate for 20 years (ILFE = 20) and to have a 5 year institutional control period after facility closure (IINS = 5). Default values for facility and disposal site environmental characteristics are again used (IDAT = 0), and impacts from possible leachate accumulation and overflow are considered (IOFL = 1).

The waste stream characteristics for this example are the same as those given above for the first example. The only difference is that in this example the waste is assumed to be in an unpackaged form (IK's = 0, 0).

Again, only four transport vehicles are assumed to be used to transport the waste to the incinerator, and each shipment containing the contaminated material is assumed to consist totally of de minimis waste. The waste is all assumed to be delivered to a single incinerator, but the residue from combustion is assumed to be distributed through four sanitary landfills (IX's = 4, 100, 1, 4).

8.3.2.2 Problem Results

Tables 8-16 and 8-17 present maximum radionuclide concentrations (in Ci/m^3) for INVIMPS Examples 1 and 2, respectively, for three example radionuclides: I-125, Cs-137, and Pu-239. These example problems involve a single hypothetical waste stream and two different waste disposal methods. The waste stream is rather unrealistic, but is assumed for purposes of illustration. It is generated at a rate of 100 MT/yr, is

000220

TABLE 8-16 . Summary of Maximum Radionuclide Concentrations for INVIMPS Example One (HWF-I)

Impact Scenarios	Radionuclide Concentrations (Ci/m^3)		
	I-125	Cs-137	Pu-239
Transport worker	5.2 E-2	4.8 E-3	*
Disposal facility operations			
Off-site individual	*	*	1.7 E+5
Facility worker	1.2 E-1	4.6 E-2	2.9 E-5
Leachate treatment	1.3 E+2	2.1 E+4	1.1 E+3
Intruder			
Construction scenario	*	3.2 E-1	4.6 E-2
Agriculture scenario	*	1.6 E-1	7.0 E-2
Exposed waste			
Erosion initiated	*	*	2.9 E-1
Intruder initiated	*	3.2 E+3	2.9 E+2
Groundwater			
Intruder well	*	*	*
Population well	*	*	*
Surface water	*	*	*
Leachate overflow	*	4.6 E+1	1.2 E+0
Metal package recycle	9.7 E+2	7.2 E+1	1.2 E+1

* Effectively no limit (exceeds 1.0 E+6 Ci/m^3).

TABLE 8-17 . Summary of Maximum Radionuclide Concentrations for INVIMPS Example 2 (Inc./SLF)

Impact Scenarios	Radionuclide Concentrations (Ci/m^3)		
	I-125	Cs-137	Pu-239
Transport worker	1.4 E-1	1.3 E-2	*
Incinerator			
Off-site individual	2.8 E+0	8.0 E+2	2.6 E-1
Incinerator worker	2.3 E+0	2.1 E-1	8.6 E-2
Recycle of material			
Metal	2.7 E+0	2.0 E-1	3.4 E-2
Glass	5.7 E-2	5.3 E-3	*
Residue Disposal			
Disposal facility operations			
Off-site individual	1.3 E+1	1.8 E+3	6.0 E-1
Facility worker	3.9 E+0	3.6 E-1	6.5 E-2
Leachate treatment	9.7 E+2	1.6 E+5	8.0 E+3
Intruder			
Construction scenario	*	2.0 E+0	5.2 E-1
Agriculture scenario	*	7.2 E-1	5.5 E-1
Exposed waste			
Erosion initiated	*	*	2.0 E+1
Intruder initiated	*	1.4 E+4	2.3 E+3
Groundwater			
Intruder well	*	*	5.5 E+3
Population well	*	*	*
Surface water	*	*	*
Leachate overflow	*	1.2 E+3	5.2 E+1
Discard Material Disposal			
Disposal facility operations			
Off-site individual	9.2 E+2	1.3 E+5	4.4 E+1
Facility worker	2.9 E+1	2.7 E+0	4.8 E+0
Leachate treatment	7.1 E+3	*	5.9 E+4
Intruder			
Construction scenario	*	1.5 E+1	3.8 E+0
Agriculture scenario	*	5.3 E+0	4.1 E+0
Exposed waste			
Erosion initiated	*	*	1.4 E+1
Intruder initiated	*	1.0 E+5	1.7 E+4
Groundwater			
Intruder well	*	*	4.0 E+4
Population well	*	*	*
Surface water	*	*	*
Leachate overflow	*	8.5 E+3	3.8 E+2

* Effectively no limit (exceeds 1.0 E+6 Ci/m^3).

000222

extremely dispersible, and contains a significant metal/glass fraction. Table 8-16 presents results for disposal into a hazardous waste facility (HWF-I), while Table 8-17 presents results for incineration within a municipal incinerator, followed by disposal of the residue within sanitary landfills. Recycle of scrap metal and glass is assumed.

Maximum radionuclide concentrations in the tables are determined based on concentrations calculated for 9 organs of the body plus the (ICRP) whole body dose equivalent. Exceptions include maximum concentrations determined for transportation and recycle (metal and glass) scenarios, which are based on whole body impacts. Maximum concentrations are based upon an individual dose limitation criteria equal to 25 mrem/yr for each organ and whole body dose equivalent. (Maximum concentrations are all based on impacts to individuals rather than populations.) In the tables, radionuclide concentrations exceeding 10^6 Ci/m^3 for a given scenario are assumed to have effectively no limit for that scenario.

In Table 8-16, maximum concentrations for impact scenarios involving waste disposal (as opposed to transport, incineration and recycle) are listed twice: once for residue disposal and once for discard material disposal. This is because operations at the incinerator involves separation of the waste input to the incinerator into three substreams: a combustible substream which is incinerated, a metal/glass substream which is recycled, and a non-combustible discard substream. The residue from incinerating the combustible substream is disposed into the sanitary landfill, as is the discard material. Hence, maximum concentrations for the original waste stream are determined in terms of concentrations determined separately for each of the two disposed substreams.

I-125 and Cs-137 are limited by the waste transport scenario. As shown in Table 8-16, the maximum concentration for I-125 is determined to be about 0.05 Ci/m^3 while the maximum concentration for Cs-137 is determined to be about 0.005 Ci/m^3. These limits are nearly identical to those calculated for the glass recycle scenario as shown on Table 8-17. The maximum concentration for Pu-239 is determined to be about 3×10^{-5} Ci/m^3 based upon impacts to a worker for hazardous waste disposal facility operation (Table 8-16). These operational impacts include an accident scenario as discussed in Section 8.3.1.2.

These two examples also illustrate the difficulty of determining generic de minimis radionuclide concentrations rather than approaching the problem on a specific waste stream basis. Maximum radionuclide concentrations will change based upon different assumptions on waste dispersibility, radionuclide solubility classes, the amount of waste generated, the number of waste treatment and disposal facilities, and so forth. Most waste streams would probably be much less dispersible than that assumed for the example, and a realistic maximum concentration for Pu-239, for example, would probably be at least an order of magnitude higher. But if a generic rather than a specific waste stream approach is used, one would likely have to take the more conservative approach and assume a very dispersible waste form.

CHAPTER 8.0 REFERENCES

(1) Oakley, D.T., "Natural Radiation Exposure in the United States," ORP/SID 72-1, U.S. EPA Office of Radiation Programs, October 1974.

(2) Wick, O.J. and M.O. Cloninger, "Comparison of Potential Radiological Consequences From a Spent-Fuel Repository and Natural Uranium Deposits," PNL-3540, Pacific Northwest Laboratory for Office of Nuclear Waste Isolation, September 1980.

(3) U.S. Department of Health, Education, and Welfare, "Radiological Health Handbook," Revised Edition, January 1970.

000224

APPENDIX A

GENERATION RATES AND CHARACTERISTICS OF SOLID AND HAZARDOUS WASTES

TABLE OF CONTENTS

Section	Page
A.1 BACKGROUND	A-1
A.2 MUNICIPAL SOLID WASTE VOLUME PROJECTIONS AND CHARACTERISTICS	A-5
A.3 INDUSTRIAL HAZARDOUS WASTE PROJECTIONS AND CHARACTERISTICS	A-15
A.3.1 Waste Generation, Treatment and Disposal	A-16
A.3.2 Hazardous Waste Projections	A-31
REFERENCES	A-36

LIST OF TABLES

Table		Page
A-1	Major Agricultural Crops (USDA)	A-3
A-2	Waste of Major Farm Animals	A-4
A-3	Wastes from Mineral Extraction	A-4
A-4	Unit Weights and Compaction Factors for Typical Materials Disposed into Landfills	A-7
A-5	Assumed Composition of Municipal Waste	A-9
A-6	U.S. Industrial Waste Generation as of 1974	A-17
A-7	Potentially Hazardous Waste Growth Projections	A-18
A-8	Estimated 1980 Industrial Hazardous Waste Generation by Industry	A-19
A-9	Potentially Hazardous Waste Quantities for 1974 by EPA Region	A-20
A-10	Estimated Hazardous Waste Generation Rates for 1980 and 1981 by EPA Region	A-20
A-11	Estimated Waste Management Practices as of 1977	A-21
A-12	Percent of Hazardous Waste Treated/Disposed Off-Site by EPA Region	A-21
A-13	Estimated Off-Site Hazardous Waste Management Services Utilized by Industrial Category	A-22
A-14	1980 Estimated Mass of Hazardous Waste Material Processed by Commercial Off-Site Facilities by Waste Management Option and by EPA Region	A-23
A-15	Number of Commercial Facilities Offering Specific Hazardous Waste Management Options (June 1980)	A-24
A-16	Types of Chemical, Physical, and Biological Treatment Processes	A-26
A-17	Estimated Environmental Adequacy of Disposal Practices for Potentially Hazardous Wastes	A-28
A-18	Contaminants Involved in Damage Incidents by Disposal Method	A-29
A-19	Mechanisms Involved in Incidents of Damage by Disposal Method	A-30
A-20	Projections of Off-Site Hazardous Waste Treatment/Disposal by NRC Region and Waste Management Option	A-33
A-21	Projected Waste Mass Ultimately Disposed at Off-Site Hazardous Waste Disposal Facilities	A-34

000227

APPENDIX A. Generation Rates and Characteristics of Solid and Hazardous Wastes

To enable calculation of the radiological impacts of disposal of particular low-activity low-level waste streams by less restrictive means (also termed "de minimis waste disposal"), an estimate is needed of the present and future compositions and rates of generation of non-radioactive solid and hazardous wastes. This estimate is performed based upon a review of several information sources that have been prepared over a number of years. The projections thus obtained are prone to uncertainties, which is partly because uncertainties exist in the data upon which the projections are based--particularly for earlier data sources. In addition, the definitions of what constitutes a "municipal solid" or a "hazardous" waste are not precise and furthermore may change due to regulatory actions. Also, the volumes of wastes generated depend upon a number of factors which are difficult to project, such as changes in the designs and operating practices of particular industrial processes, particular regulatory requirements, or the state of the economy. For example, stricter regulatory controls on air and water pollution will result in larger volumes of solid wastes to be disposed.

A.1 BACKGROUND

The United States is an industrial, consumer-oriented society, and enormous quantities of all types and forms of wastes are generated annually. Such waste may be loosely classified as (1) municipal solid waste from residential, commercial and institutional sources; (2) industrial waste; (3) mineral and agricultural waste; and (4) air and water treatment sludge. A portion of the waste from each of the above four loose waste classes may be defined as being potentially hazardous.

In the ensuing discussion, annual generation rates of each of the above four "classes" of waste are briefly addressed in turn, followed by a brief discussion of projected hazardous waste generation rates. The references used to formulate this discussion have generally focused on data assembled around two time frames: data collected as of about 1969, and data collected as of about 1976. Some later data is also available. Much of this data has been collected by the Environmental Protection Agency (EPA), which has carried out extensive studies of the generation and characteristics of different types and forms of waste, as well as technologies available for adequate treatment and disposal. These studies have been carried out as part of EPA's mandate under several Acts of Congress, including the Resource Recovery and Conservation Act (RCRA). In general, information from more than one time frame is presented below, as this helps to give the reader an appreciation of the uncertainties involved in making waste projections.

Following this background section, a more detailed discussion is presented on the generation and characteristics of municipal solid waste, and on the generation and characteristics of industrial hazardous waste. More detailed information on typical waste management techniques, including transportation and disposal, is also presented for these two waste types. These two waste types were selected since they are of most interest in terms of options for disposal of low-activity radioactive waste by less restrictive means.

Municipal solid waste. Municipal solid waste includes waste from residential, commercial, and institutional sources, and can be characterized as mostly consisting of common household or office trash. One reference, which quotes data assembled in 1969, estimated an annual generation rate of municipal waste of 250 million tons/yr, of which only about 190 million tons was actually collected (Ref. 1). This reference postulated that much of the remainder was disposed in scattered heaps around the countryside, accumulated in back yards or vacant lots, or strewn alongside roadways. Another reference (Ref. 2) provides an estimated generation rate for municipal waste of 190 million metric tons (MT)/yr, and further estimates the rate of generation to be increasing at a rate of 4 to 6 percent per year. A later reference, which was published in 1978 and reprinted in 1979, presents solid waste generation as of 1976 (Ref. 3). In this reference, municipal solid waste generation is estimated at 130 million MT/yr in 1976 and is estimated to climb to 180 million MT/yr by 1985. A slightly higher estimate is made in Reference 4, which estimates a total residential and commercial generation rate of about 145 million tons in 1977.

Industrial waste. Industrial waste is generated as byproducts of a number of manufacturing operations, and is the principal source of waste identified by EPA as being potentially hazardous. Earlier estimates (around 1969) of industrial waste generation were put at about 110 million tons/yr in Reference 1, and at about the same generation rate in Reference 5. Reference 5 also estimates an approximate hazardous waste generation rate of about 10 million tons/yr, or about 10% of all industrial waste generated. This source term was estimated to be increasing at a rate of 5 to 10% annually, and about 90% of such waste was believed to be in a liquid or semi-liquid form (Ref. 5). More recent data estimates industrial waste generation at 344 million MT/year in 1976 with a growth rate of about 3%, of which 10-15% is expected to be classified as hazardous (Ref. 3).

Mineral and agricultural waste. The annual generation rate of mineral and agricultural waste has been estimated at billions of tons per year. One reference (Ref. 6) estimates agricultural waste, which includes crop residues, animal manures, and food processing residues, as being generated at a rate of over 2 billion tons per year. Mineral solid waste generation has been estimated at 1.1 to 1.5 billion tons/yr. The generation rate of both types of waste is expected to grow with time. An appreciation of the principal sources of such agricultural and mining waste can be obtained by reference to Tables A-1, A-2, and A-3 (Ref. 6).

Air and water treatment sludge. Five million MT (dry weight) of waste water treatment sludge was estimated to be generated from about 18,000 water treatment plants, and this mass was projected to double over the next 8 to 10 years. Of this waste, about 25% was landfilled, 25% spread on land surfaces, 15% disposed into the ocean, and 35% incinerated. Wet sludge from flue gas treatment systems at fossil fuel power stations was estimated at 120 million MT/yr (wet weight) by the year 1985. This was based upon an assumed installation of air treatment systems on plants generating a total of 100,000 MW of power (Ref. 3). These estimates of sludge generation are probably high, since air and water cleaning requirements have not proven to be as extensive as expected in 1977.

000229

Table A-1. Major Agricultural Crops (USDA)

Crop	Acres Harvested (10^6)	Field Waste (tons/cap/yr)	Field Waste (10^6 tons/yr)	Nature
Corn, grain	57.0	4.5	256.0	Leaves, stalks
Wheat	50.0	1.3	65.0	Stubble, straw
Oats	18.0	1.8	33.0	Stubble, straw
Barley	11.0	1.8	19.0	Stubble, straw
Rye	1.5	1.3	1.8	Stubble, straw
Mixed grains	1.0	1.3	1.8	Stubble, straw
Rice	2.0	3.0	5.9	Stubble, straw
Flax	2.7	0.8	1.1	Leaves, stalks, straw
Alfalfa, clover seed	1.4	0.8	1.1	Leaves, stalks, straw
Sorghum for grain	13.0	3.0	39.0	Leaves, stalks, straw
Cotton	10.0	2.0	20.0	Leaves, stalks, straw
Beans, dry	2.0	2.0	3.0	Leaves, stalks, straw
Peas, dry	0.4	2.0	0.7	Leaves, stalks, straw
Soybeans for beans	37.0	2.0	74.0	Leaves, stalks, straw
Peanuts for nuts	1.6	3.0	4.4	Leaves, stalks, straw
Potatoes	1.7	3.0	4.4	Leaves, vines, culls
Sweet potatoes	0.2	3.0	0.6	Leaves, vines, culls
Tobacco	1.0	0.5	0.4	Leaves, vines, culls
Sugar cane	0.7	0.5	0.4	Leaves, vines, culls
Sugar beets	1.2	3.0	3.5	Leaves, vines, culls
Vegetables	4.0	3.0	11.0	Leaves, stalks, culls
Fruits and nuts	5.0	2.0	10.0	

With addition of omitted specialty crops--tung nut, castor oil bean, guar, etc.--this waste is of the order of 3 tons/cap/yr or 16.5 lb/cap/day.

Table A-2. Waste of Major Farm Animals

Animal	Population (10^6)	Manure (tons/unit/yr)	(10^6 tons)
Cattle	110	10	1100
Hogs	48	8	400
Sheep	22	3	66
Horses, mules	1	10	10
Poultry			
Broilers	2600	0.005	13
Turkeys	116	0.025	3
Layers	350	0.05	16
Ducks, pigeons, rock hens, etc.	10	0.05	0.05
Pets			
Cats	21	0.06	1.25
Dogs	25	0.10	2.5

Approximately 8 tons/cap/yr or 45 lb/cap/day

Table A-3. Wastes from Mineral Extraction (10^6 tons)

Material	Mine Wastes	Mill Tailings	Washing Plant	Slag	Processing Plant	Total
Copper	300	200		6		506
Iron and steel	120	110		15	2	247
Coal, bituminous	13		90			103
Coal, anthracite	1		3			4
Phosphates	1		60	4	10	75
Lead-zinc	3	20	2			25
Aluminum					6	6
Coal ash					26	26
Others	10	10	30	15	235	300
Total:	448	340	185	40	279	1292

000231

Hazardous waste generation. EPA has estimated that a considerable portion of the waste thus generated is hazardous. Most of the waste thus identified as being hazardous is defined as such due to the toxic nature of the material, although some of the waste is considered hazardous due to a number of other possible factors such as etiologic activity, genetic activity, flammability, corrosiveness, or reactivity. One reference estimates a total hazardous waste generation rate as of 1977 of 1066.9 million MT (Ref. 7). This waste mass is distributed as follows (Ref. 7):

	Million MT
Hospitals	0.5
Private households	10.5
Metals mining	989.1
Electric power generation	31.3
Industrial waste	35.5
	1066.9

Of this waste, hospitals and private households are exempt from RCRA, so hazardous waste generated by such sources would be expected to be disposed generally as municipal waste. Waste from electric power generation is classified under RCRA as a "special" waste. Metal mining waste would be expected to be almost exclusively disposed in place--generally in large heaps. This leaves about 35.5 million MT of hazardous wastes from industrial sources, most of which is disposed into landfills (Ref. 7). It is estimated that up to 90% of industrial hazardous wastes is disposed in an inadequate manner (Ref. 3).

A.2 MUNICIPAL SOLID WASTE VOLUME PROJECTIONS AND CHARACTERISTICS

As discussed above, the municipal solid waste generation rate has been estimated at 130 million MT in 1976 and is projected to rise to 180 million MT by 1985 (Ref. 3). This waste mass will most likely include waste of a hazardous or toxic nature which has been discarded by hospitals and households (e.g., pesticides, paint, miscellaneous chemicals). The above projection implies that an average of about 5.6 million MT will be added to the waste generation rate each year between 1976 and 1985, or a growth rate of about 3.7% per year. This growth rate is slightly less than the lower end of the range in growth rates (4-6%) estimated in Reference 2.

It would be useful to estimate the municipal waste generation rate between 1980 and the year 2000, since this is the time period considered for low-level waste projections for the draft and final Part 61 environmental impact statements (EIS) (Refs. 8, 9). At a growth rate of 3.7% since 1976, the waste generation rate would be estimated at about 150 million MT/yr during 1980 and 309 million MT/yr by the year 2000. This corresponds to an average generation rate of about 221 million MT/yr over the 20-year period. This waste generation rate is assumed to be distributed across the United States according to population density. This is reasonable since most municipal

solid waste is composed of common household trash. Using the 1979 United States population as a guide (Ref. 10), the population distribution across the five U.S. Nuclear Regulatory Commission (NRC) regions is given as follows:

NRC Region	Percent Pop. Distribution
I	25
II	20
III	24
IV	16
V	15

The corresponding waste volumes are proportional to the waste densities, which are variable depending upon the composition of the waste. The waste volumes ultimately disposed are functions of the degree of compaction afforded during waste transportation and disposal, and upon possible treatment options such as incineration. One reference (Ref. 2) estimates a typical average municipal waste density of about 0.1 gm/cm^3 (0.1 MT/m^3). A second reference (Ref. 6) provides a density range of 200 to 500 lbs/yd^3 (0.12-0.30 gm/cm^3) for mixed municipal refuse, while a third reference (Ref. 11) estimates a density range between 200 and 300 lbs/yd^3 (0.12-0.18 gm/cm^3) for solid wastes in garbage cans or other receptacles at the household or on the street curb. Assuming an average density of 250 lbs/yd^3 (0.15 gm/cm^3), this results in a projected waste volume generation rate of 1,000 million m^3/yr during 1980 and 2,060 million m^3/yr by the year 2,000, or an average of 1,473 million m^3/yr over the 20-year period.

Much if not most of the waste thus generated will be somewhat reduced in volume as part of collection procedures. Large compacting collection vehicles can be expected to reduce the volume of waste collected by such vehicles by about 60 to 70 percent (Ref. 2). The density of the waste after compaction in a standardized collector truck is about 500 to 700 lb/yd^3 (0.30-0.42 gm/cm^3) (Ref. 11). Assuming that the waste thus collected is disposed into a sanitary landfill, the waste thus disposed is generally further compacted by landfill equipment to a density on the order of 800 to 1000 lb/yd^3 (0.47-0.59 gm/cm^3) (Ref. 11). Table A-4 lists typical unit densities for various materials commonly disposed in landfills, as well as the approximate degree to which the individual materials can be compacted (Ref. 12). Municipal waste, however, is composed of a mixture of materials as discussed below.

Municipal solid waste may potentially consist of almost anything, but has been estimated to contain approximately 75 percent organics, which are mostly cellulosic. The composition of the waste will vary over different cities and regions of the country, depending upon the economic, business, and life-style characteristics of the city or region (Ref. 13). The environment of the region in which the waste is generated will also have a large influence on the waste composition, including its moisture content. Seasonal variations have also been observed.

000233

Table A-4. Unit Weights and Compaction Factors for Typical Materials Disposed into Landfills

Materials	Unit wt. (lb/yd^3)	Compaction factor*
Demolition--mixed, noncombustible	2,400	0.8
Demolition--mixed, combustible	600	0.7
Dirt, sand or gravel	2,430	0.8
Rock	2,430	0.6
Broken pavement or sidewalk	2,560	0.7
Construction mixed	1,620	0.7
Street sweepings	2,300	0.9
Logs and stumps 10" diameter and greater	675	0.5
Logs and stumps less than 10" diameter	675	0.5
Limbs and leaves chipped	320	0.4
Limbs and leaves not chipped	270	0.3
Brush	54	0.1
Grass and garden	135	0.2
Paunch manure	1,730	0.8
Pen sweepings	1,090	0.6
Other meat packing wastes	1,730	0.8
Poultry processing wastes	1,730	0.8
Tires and rubber products--new	400	0.2
Tires and rubber products--used	400	0.2
Rubber manufacturing wastes	1,500	0.3
Oil, tars and asphalts (liquid)	1,620	0.1
Bean or grain wastes	1,300	0.8
Potato processing wastes	1,130	0.8
Other food processing waste	540	0.6
Fruits and vegetables	950	0.5
Ashes and cinders	1,220	0.9
Fly ash	2,160	1.0
Cement industry waste	2,400	1.0
Other fine particles	1,620	0.9
Garbage and kitchen waste, domestic	167	0.3
Garbage and kitchen waste, commercial	167	0.3
Mixed trash and refuse (incl. garbage)	140	0.2
Mixed trash and refuse (no garbage)	140	0.2
Incinerator residue domestic	810	0.7
Incinerator residue, commercial and industrial	810	0.7
Paper and cardboard	120	0.2
Cans	160	0.2
Furniture, combustible	80	0.2
Furniture, noncombustible	80	0.2
Major appliances	300	0.3
Heavy metal scrap	4,050	0.9
Light metal scrap	1,350	0.3
Wood crates	300	0.5
Glass and bottles	700	0.9
Battery cases and automotive	1,200	0.9
Automotive bodies	216	0.3
Wire	540	0.2
Chemical waste, dry	1,080	0.9
Chemical waste, liquid or wet	1,620	0.9
Sewage sludge solids	1,750	0.1
Sewage grit	2,200	0.9
Sewage screenings	1,600	0.9
Sewage grease skimmings	1,600	0.9

*Compaction Factor Adjustment. A factor was assigned to each material which would adjust the material received during a day or week or reduce its volume "as received" to the volume which it would occupy when mixed with other materials and compacted into a landfill. Cover dirt is not included.

000234

6400

Thus, estimates of waste composition as obtained from the literature can be quite variable. To illustrate, estimates of waste composition as obtained from two sources are provided below. The first estimate is based upon a review of municipal solid waste collected from four different cities (Ref. 14), while the second estimate presents an "average" waste composition (Ref. 13).

Material	Percent Composition of Municipal Waste	
	Range	Average
Paper	40 - 54	45.0
Wood	1.5 - 3.5	3.0
Plastic	2 - 3	2.5
Rags	1.5 - 8	4.5
Glass	3.5 - 10	6.0
Metal	7 - 13	9.0
Stone, sand	7 - 8.5	7.5
Organics (food and yard wastes)	20 - 27	22.5

Municipal Solid Waste Composition*	
Component	% by Weight
Paper	39.6
Glass	10.0
Metals	9.5
Ferrous (8.6)	
Aluminum (0.6)	
ONF (0.3)**	
Plastics	4.1
Rubber and leather	2.7
Textiles	1.6
Wood	3.6
Food waste	13.3
Yard waste	14.1
Misc. inorganic	1.4

*Approximately 25% moisture content
**Other non-ferrous

In this report, an average municipal waste composition as obtained from Reference 15 is assumed, and this assumed composition is listed in Table A-5. An average moisture content of about 22% is also assumed, resulting in a wet composition of about 63% combustibles, 9% metal, 8% glass, and 20% "other" Also listed in Table A-5 are the assumed uncompacted densities of each of the individual waste components, resulting in a weighted average uncompacted density of about 250 lb/yd^3 (Ref. 15).

000235

Table A-5. Assumed Composition of Municipal Waste

Component	Weight Percent	Moisture Content (%)	Uncompacted Density (lb/yd^3)
Combustibles:	63	--	--
Paper	40	6	137.7
Cardboard	4	5	83.7
Plastics	3	2	108
Textiles	2	10	108
Garden trimmings	12	60	175.5
Wood	2	20	405
Metal:	9	--	---
Tin cans	6	3	148.5
Non-ferrous metals	1	2	270
Ferrous metals	2	2	270
Glass:	40	--	---
Bottles	40	2	326.7
Other:	20	--	---
Dirt, bricks, ash, etc.	4	8	810
Leather	0.5	10	270
Rubber	0.5	2	216
Food products	15	70	486
	100	21.9*	250*

*Weighted averages.

Of this waste, most will be collected and transported away from the place of generation for treatment and disposal. Some of it, however, will be disposed by other means such as incineration in apartment house, institutional or backyard incinerators, disposed into sewer systems, or random dumping (e.g., littering).

Of the waste transported off-site for treatment and/or disposal, most is collected by public or private companies. In a survey involving 46% of the U.S. population, it was determined that about 12% of the waste collected and transported away from the source of generation was performed by individuals. A very similar statistic (13%) was observed for commercial wastes. The collection frequency was determined to be about 48% on a weekly basis, 32% twice a week, and 20% more often than twice a week (Ref. 6). Collecting such waste involved approximately 175,000 people and 138,000 vehicles as of 1975. Approximately 78,000 of these vehicles were large compactor units while the remaining 60,000 were other types of vehicles (Ref. 14). The numbers of people and vehicles involved in waste collecting would be expected to grow in a reasonably proportional relationship to the growth of the waste volume, or about 4% per year.

A 1966-67 survey of about 600 cities provides some information on the hauling distances for waste collection. This survey determined that at that time many cities were not faced with long hauling distances to disposal sites. Approximately half of the cities reported a haul distance of less than 5 miles. It is believed, however, that haul distances have probably generally increased since the survey. This is because at the time of the survey, about 50% of the larger cities (over 25,000 population) using sanitary landfills had less than 6 years of remaining capacity (Ref. 6).

The current ultimate fate of the waste is approximately as follows (Ref. 14):

Treatment/Disposal Mode	Percent
Incineration	9
Compost production	<1
Recovery	7
Sanitary landfill	6
Open dumps	78

As shown, about 9% of the waste is incinerated by some manner of controlled method (as opposed to an uncontrolled method such as open burning). This technique is used by about 20% of communities having populations exceeding 25,000 (Ref. 6). As of about the 1967 time frame, there were 74,600 tons/day of installed incinerator capacity operating in the United States; this capacity was spread through about 300 municipal incinerators (and several thousand industrial incinerators, often models in the 200-500 lb/hr range using two-stage combustion). However, something like 70% of these units were without adequate air pollution control devices (mostly due to system overloading), and therefore did not meet existing air codes. Many also produced residues and quench waters that were released into the environment without adequate treatment and control. More recent restrictions and regulations on environmental releases to air and water pathways will probably

000237

restrict increased use of incineration in the near future (Ref. 6). Very little of the energy created through the incineration process is currently recovered for use.

Composting is primarily a method of supplying humus to soil by converting organic material into a dessicated, non-odoriferous form through bacterial action. It has proven to be considerably more popular in Europe than in the United States, and as of June 1967, there were only approximately 730 tons/day of installed composting capacity in the United States (Ref. 6). A significant future increase in capacity is not anticipated. Various processes have been developed and demonstrated in this country, and typically a product is produced which can be sold as a soil conditioner. Most composting processes require the addition of moisture to the input refuse, and sewage sludge is frequently used for this purpose (Ref. 6).

The above item "recovery," or "resource recovery," refers to (1) recycling of once-used materials, or (2) "energy recovery," which is use of solid waste as a fuel in place of coal, oil, or gas (Ref. 15). Recycle activities can basically take two forms. One would be a case in which all waste is taken to a facility which sorts the waste into recyclable and other fractions. Another case would be one in which recyclable material is sorted by private citizens prior to having the waste picked up, leaving few sorting requirements at the recycle facility. This latter case is known as "source separation" (Ref. 6), and may take a number of forms. For example, some cities have recycle boxes for deposit of newspapers, bottles (e.g., soda, beer), and cans.

As of 1977, of the above 7% waste recovery, 6% was recycled through source separation, or setting aside recyclable material at the point of generation. There were about 3,000 recycling centers in the country, and curbside collection was practiced in 215 cities (multimaterial: 40 cities; paper only: 175 cities). Ninety percent of the waste material recycled through source separation consisted of paper. Very little (less than 1%) was recycled through sorting of mixed waste at a recycle facility; source separation accounted for 90% of all the materials recovered from solid waste. The remaining <1% of waste recovered was converted into energy (e.g., steam for electricity, space heating, process heating) at "resource recovery" facilities (Ref. 6).

The above table is interesting in that while it indicates that 84% of the waste is disposed by land disposal, 93% of the land disposal facilities utilized do not qualify as sanitary landfills according to the criteria set forth by EPA (Ref. 17). Thus, such facilities are classified by EPA as "open dumps." The total number of both classes of land disposal facilities was about 18,500 sites in 1976 (Ref. 3), of which only 20 sites were lined and about 60 had provisions for leachate control. The total land area covered by these 18,500 facilities is about 500,000 acres, resulting in a rough average land area of about 27 acres per site (Ref. 3).

An EPA survey of 11,781 unacceptable land disposal sites resulted in the following types of problems being identified (Ref. 14):

Problem	Number of Sites	Percent
No daily cover	1,046	8.9
Burning	304	2.6
Water pollution	320	2.7
Burning and no daily cover	5,393	45.8
Water pollution and no daily cover	764	6.5
Burning and water pollution	199	1.6
Burning, water pollution, and no daily cover	3,755	31.8
Total:	11,781	

Thus, of all the open dumps surveyed, 93% had either no or an insufficient daily cover, 84% burned all or a part of the waste at least some of the time and 45% had an existing or potential water pollution problem (Ref. 14). Many of these sites probably also practiced unauthorized or informal scavenging for useful items, as opposed to a controlled recycle operation. (Uncontrolled scavenging is prohibited at a facility classified as a sanitary landfill, although controlled salvage operations are allowed.)

The above 1976 data indicates that of the municipal waste collected for transport from the generator's site, about 9% is incinerated in a controlled manner while a maximum of 66% has the potential for combustion in an uncontrolled manner at open dumps. It is not believed to be reasonable to assume that all incinerable material sent to open dumps that practice burning will actually be burned, since most facilities probably perform such burning only some of the time, and open burning would be expected to be an inefficient combustion process in any case.

Future waste treatment and disposal practices are difficult to project. It is apparent that a number of factors will influence such practices. These factors can include public and political support for and against regulations controlling waste treatment, recycle, and disposal; public and political support for and against the existence of waste treatment, recycle, and disposal facilities; the cost and energy savings that are projected to result from a particular treatment or recycle process as compared with corresponding perceived environmental impacts; and the availability of funds to finance construction of treatment, recycle, and disposal facilities.

For example, a community may wish to install a waste incineration/recycle facility in which the heat produced is used to generate electricity. But whether political and public support for the siting of such a facility exists is another story. There may be opposition to such a facility due to perceived local environmental inputs (e.g., airborne effluents) as well as perceived short-term increases in costs for waste disposal, despite evidence that the facility will reduce long-term impact and costs. Federal or state

000239

regulations which would require improved methods may be rolled back, leaving local officials with less justification to implement a particular project. Capital funds may be difficult to acquire, particularly in the absence of federal assistance. Thus, a community may find it difficult to modify existing waste treatment and disposal practices, no matter how unsatisfactory such practices may be in terms of long-term costs and environmental impacts, and even if alternatives are identified which will clearly decrease long-term costs and impacts.

Other factors are more purely economic and technical. Improved land disposal techniques, for example, are naturally more expensive than open dumping, and the prevailing human attitude toward waste disposal in general has almost invariably been to do whatever is least expensive in the short run, provided that public health hazards are not too noticeable. In the case of incineration, future use may be reduced rather than increased, despite the growing scarcity of waste disposal space near sources of generation. Tighter restrictions on airborne and waterborne effluents may act to close existing units, and high capital costs may restrict more environmentally sound units from being constructed. Even without consideration of air and water effluent treatment systems, large incineration units would be expected to be expensive. When one adds on such treatment systems, and then considers that changes in requirements may require retrofitting later, it can be seen that the delays in facility construction that could occur combined with the current high interest rates can easily result in very large cost overruns for a given facility.

Future use of large resource recovery facilities may be even more problematical. Present technologies have often had difficulties in processing and disposing of waste in a manner which is sanitary, economical, reliable, or ecologically sound (Ref. 18). In incinerators designed to recover heat, for example, corrosion of steam tubes can be a problem. Corrosion caused by the high chloride content of the input refuse feed can be reduced by limiting the temperature of combustion, although this reduces the quality of the steam produced. Another problem is that the refuse feed cannot be stockpiled for long periods, as it is likely to putrefy. Minor fluctuations in the feed input volume delivery rate can therefore hamper operations. Assuming that the steam produced would be used for space or process heating, a lack of system reliability would mean that alternative backup energy sources would need to be provided, at added expense. System reliability would be even more important if the steam produced was to be used for electrical power generation, since expensive turbines, generators, control systems, etc., must be purchased and installed. Recycled products, principally glass and metals, frequently contain sufficient impurities that they cannot be readily marketed. Such problems, among several others of a teething variety, can often make resource recovery operations uneconomical and/or have health, safety, or environmental impact problems (Ref. 18).

Although the above problems are not insurmountable, they are costly, and the result is that waste incineration and recycle activities other than source separation will probably not increase by a terribly significant amount over the next several years. Likewise, use of unsatisfactory disposal practices such as open dumps will probably eventually be all but eliminated, although it is difficult to project how quickly this will be accomplished. What is believed to be a reasonable, although somewhat pessimistic, estimate of

near-term treatment and disposal practices is given below. This estimate is also believed to result in a conservative analysis of the impacts of disposal of waste by less restrictive means. As stated above, long-term practices are difficult to project, although the use of sanitary landfills rather than open dumps will probably increase significantly.

Treatment/Disposal Mode	Percent
Controlled incineration, no recycle	10
Incineration and recycle	1
Recycle as source separation	10
Compost production	<<1
Sanitary landfill	12
Open dumps	67

As shown, about 10% of the waste is assumed to be incinerated through some controlled method, with no attempt to recycle the metal and glass portion of the input waste feed. Of this, almost all is assumed to take place at moderate combustion temperatures, and about 10% of the time a sorting step is incorporated in which non-combustible items are removed before incineration. A higher temperature slagging operation is assumed for a small fraction of the waste, in which there are no sorting operations either prior to or after the slagging activities. To summarize, of the waste incineration carried out with no attempt at recycle, the following fractions are assumed to apply:

Incineration/Waste Handling Mode	Percent
Mod. temp., sorting	10
Mod. temp., no sorting	85
slagging, no sorting	5

In any case, the residues from waste incineration, including ashes, slag, and sorted materials, are assumed to be disposed by land disposal according to the following fractions: 15% sanitary landfills, 85% open dumps. This distribution is in accordance with the distribution between sanitary landfill and open dump disposal as given in the above table.

One percent of the generated waste is assumed to be incinerated, with the metal and glass fraction sorted out of the input feed for recycle purposes. The incineration process is assumed to be a relatively low temperature operation similar to the operation discussed above. The residue from incineration is disposed by land disposal according to the above fractions.

Ten percent of the waste is assumed to be recycled by means of source separation activities. That is, waste sorting is carried out by private citizens prior to pickup by refuse collection organizations and agencies. Ninety percent of this recycled material is assumed to consist of paper while the remainder is assumed to consist of metal and glass.

000241

The remaining 79% of the waste generated is assumed to be disposed by means of land disposal. Fifteen percent of the waste disposed in this manner is assumed to be disposed into sanitary landfills (12% of all as-generated waste) while the remaining 85% is assumed to be disposed into open dumps (67% of all as-generated waste).

A.3 INDUSTRIAL HAZARDOUS WASTE PROJECTIONS AND CHARACTERISTICS

As discussed in the above Section A.1, what may be described as "hazardous waste" may be generated by a number of sources, including households, hospitals, industrial firms, mines, and power companies. Of these sources, this appendix is principally concerned with hazardous waste generated by industrial firms, since such waste frequently consists of solids having somewhat similar physical (but not chemical) characteristics to low-level radioactive waste (e.g., trash), and such waste is frequently treated and/or disposed by private firms which receive waste from a number of waste generators. (Other than radioactivity, most low-level radioactive waste would not be considered hazardous, at least not as defined by the four characteristics summarized below.)

Treatment and disposal of such waste is regulated by EPA principally through RCRA. EPA has identified two methods for determining a hazardous waste: listing a waste as being hazardous, and testing a waste to determine whether it exhibits one of four measurable characteristics. A particular substance may be placed on the EPA hazardous waste list if it contains chemicals that have a reported toxic, carcinogenic, mutagenic, or teratogenic effect on humans or other life forms. There are several substances currently on the list and the list keeps expanding.

The four measurable characteristics used as criteria in standardized tests for hazardous waste identification include ignitability, corrosivity, reactivity, and toxicity. The first three characteristics produce acute effects capable of causing immediate damage while the fourth creates chronic effects more likely to appear over a longer time period. These four characteristics are defined as follows (Ref. 4):

- Ignitability--wastes that pose a fire hazard during routine management.
- Corrosivity--wastes requiring special containers because of their ability to corrode standard materials or requiring segregation from other wastes because of their ability to dissolve and thus mobilize other toxic contaminants.
- Reactivity--wastes that, during routine management, tend to react spontaneously, to react vigorously with air or water, to be unstable to shock or heat, to generate toxic gases, or to explode.
- Toxicity--wastes that, when improperly managed, may release toxicants in sufficient quantities to pose a substantial hazard to human health or environment.

Given the above, it is apparent that the definition of a hazardous waste is a rather general one, and may include a multitude of different types and

forms of waste material. For this reason, projections of present and future volumes and characteristics of hazardous waste, as well as projections of treatment and disposal options, are much more judgemental than those for municipal waste. This section, therefore, has been divided into two subsections. The first subsection summarizes available data on hazardous waste generation, treatment, and disposal. The second subsection presents the waste projections based upon the data.

A.3.1 Waste Generation, Treatment, and Disposal

From a series of ongoing studies on industrial waste generation, treatment, and disposal, EPA has produced estimates of the principal sources of industrial waste. One earlier estimate categorizes waste generation by 14 major industries. This estimate is believed to include the majority of waste generated by industry and is given for the year 1974 (Ref. 19). This estimate is summarized in Table A-6.

The generation rate of industrial waste has been estimated to rise to 336-344 million MT/yr by the time frame 1976-1977 (Refs. 3, 19).

EPA has also made a series of estimates of the fraction of the generated industrial waste that may be considered hazardous (Refs. 19, 20). One EPA reference provides estimates for the year 1974, as well as projections for the years 1977 and 1983 (Ref. 19). These estimates are given in Table A-7, along with the percent (by wet mass) contributed by each major industry. The percent growth (based on dry mass) from the years 1974 to 1983 is also given.

Later estimates are also available which provide estimated generation rates for the years 1980 and 1981 (Refs. 4, 20). Table A-8 lists hazardous waste generation for 1980 according to Standard Industrial Classification (SIC) codes. Of the 41,240,000 MT (wet) generated, about 62% is generated by the chemicals and allied products industries and 10% by the primary metal industries (Ref. 20). Waste generation is estimated to rise to 43 million MT (wet) in 1981 (Ref. 4).

As expected, industrial hazardous waste generation is not uniform across the country but is concentrated in the eastern parts of the country as well as the Great Lakes region. The chemicals industry is concentrated in EPA Regions IV and VI, for example, while the primary metals industry is concentrated in EPA Region V. An estimate of the 1974 generation rate by EPA region is given in Table A-9 (Ref. 19). Estimates of the 1980 and 1981 hazardous waste generation rates by EPA Region are given in Table A-10 (Ref. 20).

Of this waste, most is generated in a liquid or semi-liquid form. There are currently greater than 100,000 surface impoundments for liquified industrial waste (Ref. 3), of which probably 10-15% may be classified as containing hazardous material. Somewhere between 70 and 80% of the hazardous industrial waste being generated is disposed on the property of the waste generator (Ref. 3).

000243

Table A-6. U.S. Industrial Waste Generation as of 1974 (Million Metric Tons Annually)

Industry Category	Total Dry	Total Wet	% of Wet Mass
1. Batteries	0.000	0.010	0.005
2. Inorganic chemicals	40.000	68.000	34.0
3. Organic chemicals, pesticides, explosives	2.200	7.000	3.5
4. Electroplating	0.909	5.276	2.6
5. Paints	0.370	0.396	0.20
6. Petroleum refining	0.625	1.757	0.88
7. Pharmaceuticals	0.244	1.218	0.61
8. Primary metals	100.342	109.902	55.0
9. Textile dyeing and finishing	0.310	2.099	1.1
10. Rubber and plastics	2.007	3.254	1.6
11. Leather tanning and finishing	0.064	0.203	0.10
12. Special machinery	0.305	0.366	0.18
13. Electronic components	0.037	0.060	0.03
14. Waste oil re-refining	0.057	0.057	0.03
Totals:	147.470	199.598	

Reference 7 provides a breakdown of the estimated quantities of waste disposed by different disposal methods (as of 1977), and this estimate is printed as Table A-11 (Ref. 7). As shown, about 23% of the waste is estimated to be disposed off of the waste generator's site.

The use of treatment and disposal services removed from the waste generator's site is of particular interest in this appendix, since de minimis radioactive waste which contains hazardous chemicals or other materials would be expected to be treated and/or disposed by commercial hazardous waste operations rather than by hazardous waste generators. Reference 20 provides more recent estimates of the fraction of the total hazardous waste generated which is treated/disposed by off-site waste management services. This estimate calculates to be 17-18% for 1980 and about 23% for 1981. An estimate for 1981 as determined by EPA Region is provided in Table A-12 (Ref. 20).

Table A-7. Potentially Hazardous Waste Growth Projections

Industry	Amount (Million Metric Tons/Yr) 1974 Dry	1974 Wet	1974 % of Wet Mass	1977 Dry	1977 Wet	1977 % of Wet Mass	1983 Dry	1983 Wet	1983 % of Wet Mass	Growth* 74-83
1. Batteries	0.005	0.010	0.035	0.082	0.164	0.48	0.105	0.209	0.55	2000
2. Inorganic chemicals	2.000	3.400	12.	2.300	3.900	11.	2.800	4.800	13.	40
3. Organic chemicals, pesticides and explosives	2.150	6.860	24.	3.500	11.666	34.	3.800	12.666	33.	77
4. Electroplating	0.909	5.276	18.	1.316	4.053	12.	1.751	5.260	14.	92
5. Paint and allied products	0.075	0.096	0.33	0.084	0.110	0.32	0.105	0.145	0.38	40
6. Petroleum refining	0.625	1.757	6.1	0.715	1.811	5.4	0.811	1.888	5.0	30
7. Pharmaceuticals	0.062	0.065	0.23	0.070	0.074	0.22	0.104	0.108	0.28	68
8. Primary metals smelting and refining	4.454	8.335	29.	4.732	9.104	27.	5.536	10.418	27.	24
9. Textile dyeing and finishing	0.048	1.770	6.2	0.500	1.870	5.5	0.179	0.716	1.9	373
10. Leather tanning	0.045	0.146	0.51	0.050	0.143	0.42	0.068	0.214	0.56	51
11. Special machinery	0.102	0.163	0.57	0.094	0.153	0.45	0.157	0.209	0.55	54
12. Electronic components	0.026	0.036	0.13	0.036	0.078	0.23	0.050	0.108	0.28	92
13. Rubber and plastics	0.205	0.785	2.7	0.242	0.944	2.8	0.299	1.204	3.2	46
14. Waste oil re-refining	0.057	0.057	0.20	0.074	0.074	0.22	0.144	0.144	0.38	253
Totals (to date):	10.763	28.755		13.795	34.174		15.909	38.089		48

*Figures based on dry weight quantities

000245

Table A-8. Estimated 1980 Industrial Hazardous Waste Generation by Industry

SIC*	Industry	Wet Mass (x 10^3 MT)	Percent Contributed
22	Textile mill products	203	0.49
24	Lumber and wood products	87	0.21
25	Furniture and fixtures	36	0.09
26	Paper and allied products	1,295	3.14
27	Printing and publishing	154	0.37
28	Chemicals and allied products	25,509	61.85
29	Petroleum and coal products	2,119	5.14
30	Rubber and misc. plastic products	249	0.60
31	Leather and leather tanning	474	1.15
32	Stone, clay, and glass products	17	0.04
33	Primary metal industries	4,061	9.85
34	Fabricated metal products	1,997	4.84
35	Machinery, except electrical	332	0.81
36	Electric and electronic equipment	1,093	2.65
37	Transportation equipment	1,240	3.01
38	Instruments and related products	90	0.22
39	Misc. manufacturing industries	318	0.77
**	Non-manufacturing industries	1,971	4.78
	Total:	41,235	

*Standard Industrial Classification
**Non-manufacturing categories:

SIC 5085 Drum reconditioners
SIC 07 Agricultural services
SIC 5161 Chemical warehouses
SIC 40 Railroad transportation
SIC 55 Automotive dealers and gasoline service stations
SIC 72 Personal services
SIC 73 Business services
SIC 76 Misc. repair services
SIC 80 Health services
SIC 82 Educational services

Table A-9. Potentially Hazardous Waste Quantities for 1974 by EPA Region (Metric Tons)

EPA Region	Dry Basis	Wet Basis	% of Wet Mass
I	205,171	1,208,486	4.2
II	586,460	1,920,524	6.7
III	1,720,138	3,888,173	14.
IV	1,434,088	4,451,865	15.
V	2,647,572	6,541,708	23.
VI	2,797,065	7,120,978	25.
VII	161,932	558,595	1.9
VIII	220,071	517,736	1.8
IX	550,693	1,487,911	5.2
X	439,818	1,059,038	3.7
Totals:	10,763,008	28,755,014	

Table A-10. Estimated Hazardous Waste Generation Rates for 1980 and 1981 by EPA Region

	1980 Estimates		1981 Estimates	
EPA Region	Mass (x 10^3 wet MT)	Percent	Mass (x 10^3 wet MT)	Percent
I	1,104	2.7	1,131	2.6
II	3,113	7.5	3,216	7.5
III	4,354	10.6	4,507	10.6
IV	10,353	25.1	10,697	25.1
V	6,428	15.6	6,611	15.5
VI	10,536	25.6	11,025	25.8
VII	1,201	2.9	1,231	2.9
VIII	318	0.8	325	0.8
IX	2,838	6.9	2,925	6.9
X	995	2.4	1,023	2.4
Totals:	41,235		42,694	

000247

Table A-11. Estimated Waste Management Practices as of 1977 (Millions of Metric Tons)

Type of Disposal	On-site(a)	Off-site(b)	Total
Landfill	12	7	19
Incineration	1	1	2
Land treatment	2	-	2
Lagoon	12	-	12
Well injection	NA	NA	NA
Other	-	Trace	Trace
Total:	27	8	35

(a) Means disposal of waste on waste generator's property.
(b) Means transferring the waste to a hazardous waste handling company.

Table A-12. Percent of Hazardous Waste Treated/Disposed Off-Site by EPA Region

EPA Region	% Disposal Off-site	EPA Region	% Disposal Off-site
I	51	VI	12
II	32	VII	36
III	20	VIII	47
IV	13	IX	31
V	39	X	49
Mass Weighted Average: 23%			

A breakdown of the fractions of the waste generated by various industries which are treated or disposed off-site is given in Table A-13. This table is given for the year 1981 and is interesting in that it indicates that the use of off-site treatment and disposal services by a given industry is not proportional to its waste generation rate. For example, the chemical industries contribute 62% of the waste mass but account for only 12% of the off-site treatment/disposal.

Table A-13. Estimated Off-site Hazardous Waste Management Services Utilized by Industrial Category

SIC*	Industry	Projected Mass Treated/Disposed Off-Site (x 10^3 wet MT)	% of Off-Site Use
22	Textile mill products	122	1.3
24	Lumber and wood products	18	0.2
25	Furniture and fixtures	29	0.3
26	Paper and allied products	40	0.4
27	Printing and publishing	80	0.8
28	Chemicals and allied products	1,165	12.0
29	Petroleum and coal products	786	8.1
30	Rubber and misc. plastic products	244	2.5
31	Leather and leather tanning	259	2.7
32	Stone, clay, and glass products	5	0.1
33	Primary metal industries	1,398	14.4
34	Fabricated metal products	1,637	16.8
35	Machinery, except electrical	279	2.9
36	Electric and electronic equipment	858	8.8
37	Transportation equipment	1,049	10.8
38	Instruments and related products	77	0.8
39	Misc. manufacturing industries	262	2.7
--	Non-manufacturing industries**	1,430	14.7
	Totals:	9,738	100

* Standard Industrial Classification
** See Table A-6 for detailed breakdown by manufacturing category

Table A-14 provides a breakdown for 1980 of the masses of waste estimated to be treated and disposed off-site as a function of waste management option and EPA Region. Of the six principal waste management options utilized by industry, the most common options include direct landfilling (38%) and chemical treatment (33%). Table A-15 summarizes by EPA Region the number of facilities which as of 1980 were offering treatment or disposal services. Most treatment/disposal services are located in EPA Region V (Ref. 20).

000249

Table A-14
1980 Estimated Mass of Hazardous Waste Material
Processed by Commercial Off-Site Facilities by Waste
Management Option and by EPA Region
(Thousand Wet Metric Tons)

EPA Region	Landfill	Land Treatment/Solar Evaporation	Incineration	Chemical* Treatment	Resource Recovery	Deep Well Injection	Total Region
I	6	-	23	81	35	-	145
II	375	-	26	619	135	-	1,155
III	170	-	48	467	51	-	736
IV	226	**	65	157	22	-	470**
V	330	-	97	486	170	152	1,235
VI	650	117**	98	146	-	635	1,646**
VII	62	-	-	36	3	-	101
VIII	***	-	-	-	-	-	***
IX	822	345	40	294	-	-	1,501
X	59	75	-	62	8	-	204
Totals:	2,699	537	398	2,346	424	788	7,192
% of Total Mass:	38	7	6	33	6	11	

* These are gross volumes and include 10 % that will require further treatment.
** Volume data from Region IV is included in Region VI to prevent disclosure of confidential data.
*** Although some landfills in the regions may handle hazardous waste, it could not be determined if these facilities plan to meet RCRA requirements.

Note: Detail may not add to total because of rounding.

000250

6400

Table A-15. Number of Commercial Facilities Offering Specific Hazardous Waste Management Options (June 1980)

EPA Region	Type of Treatment/Disposal Practice*						Total No. of Facilities
	Landfill	Land Treatment/Solar Evaporation	Incineration	Chemical Treatment	Resource Recovery	Deep-Well Injection	
I	1	0	3	3	5	0	8
II	2	0	1	8	8	0	13
III	3	0	1	8	2	0	11
IV	2	1	7	4	2	0	12
V	11	0	6	16	10	1	37
VI	10	3	6	3	0	8	21
VII	3	0	0	1	1	0	4
VIII	**	0	0	0	0	0	**
IX	10	6	1	2	0	0	14
X	2	1	0	2	5	0	7
TOTAL U.S.	44	11	25	47	33	9	127

* The sum of these numbers are greater than the total number of facilities because more than one treatment/disposal option may be available at a facility.

** Based on an interview with EPA Region VIII, some sanitary landfills may currently be handling hazardous waste. As in other Regions these facilities are not included in the reported data in this study.

000251

"Chemical treatment" in Table A-14 includes several chemical, physical, or biological processes designed to either transform the waste into a less hazardous material or to reduce its volume prior to disposal. Following treatment, a residual is often left which must be then disposed as a hazardous waste, generally by landfilling but occasionally by incineration. The volume of this residual runs at about 10% of the volume of the treated waste. Of the wastes so treated, about 50% are composed of waste water and acids, 20% are alkalines, and 30% oily waste and sludges. Industries typically utilizing chemical treatment processes include the metal finishing and steel industries, textile manufacturers, refineries, the petrochemical and pharmaceutical industries, and the automotive industry.

The most common types of chemical, physical, and biological treatment processes are listed in Table A-16 (Ref. 21), along with examples of the types of wastes so treated. Some treatment processes--e.g., neutralization--are commonly used and are broadly applicable. The most frequently used processes include neutralization (pH adjustment), precipitation, oxidation, reduction, ion exchange, and chemical fixation. Other treatment processes are not as highly developed and/or are specific to particular wastes.

Off-site incineration of hazardous waste is currently taking place at seven large high-temperature units and at 18 smaller units. Most of the incinerated waste consists of materials such as solvents and oily wastes. Some sludges and solids are also incinerated, however.

Resource recovery techniques transform a portion of the waste into a marketable material, and frequently the hazardous nature of the residual is greatly reduced. The majority of resource recovery operations involve the recovery of solvents through distillation techniques. The mass of waste sent to recovery operations in Table A-14 includes only waste which is sent to facilities offering both resource recovery and disposal services. There are additional facilities, principally involved in solvent reclamation, which offer recovery services only.

Deep well injection operations are concentrated in EPA Regions V and VI, and involve pumping liquid wastes (generally excepting chlorinated hydrocarbons) into porous formations removed from potable water and mineral-bearing structures. Industries especially favoring this disposal technique include refineries and the petrochemical industry.

Land treatment and solar evaporation are considered similar processes, and have been frequently used to treat and dispose of oil production-related waste streams such as brines and rotary muds. Solar evaporation is generally carried out utilizing large ponds, while land treatment processes typically involve application of organic waste onto or beneath the soil which is subsequently mixed to assist in aerobic decomposition of the waste.

Table A-16. Types of Chemical, Physical, and Biological Treatment Processes

Type of Treatment	Description of Process	Examples of Wastes Treated
Chemical Treatment:		
Neutralization	Neutralizing agents are reacted with wastes to adjust the pH level	Acids and alkalines from chemical, petroleum, and metal plating industries
Oxidation	Mixing of an oxidizing agent with waste to combine with another compound	Reduced ferrous iron from steel industry
Coagulation	Destabilization and aggregation of smaller particles to make settling easier	Heavy metals
Precipitation	Addition of chemicals to cause separation from a solution or suspension	Electroplating wastes
Reduction	Reduction of the oxidation state of a material	Hexavalent chromium salts
Physical Treatment:		
Sedimentation	Removal of settled suspended solids	Dissolved solids
Distillation	Boiling a mixture of liquids to extract a vapor of the lower boiling components	Halogenated and non-halogenated solvents
Evaporation	Concentration of solids by boiling off the solvent	Rinse waters from metal plating
Flotation	Floating materials to the surface by attaching them to air bubbles and then skimming the surface	Organics
Biological Treatment:		
Aerobic	Microorganisms which require oxygen for their existence are used to treat wastes	Sludges
Anaerobic	Microorganisms which do not require oxygen for their existence are used to treat wastes	High strength organic waste

000253

Of interest is the relative cost of the above waste treatment/disposal options. EPA has made estimates of such costs, and a representative set of these estimates is listed below (Ref. 21). As shown, the largest costs are associated with waste incineration.

Method	Cost ($/MT)
Land spreading	2-25
Chemical fixation	5-500
Surface impoundment	14-180
Secure chemical landfill	50-400
Incineration (land based)	75-2,000
Physical, chemical, or biological treatment	Varies

Also of interest is the environmental adequacy of the various waste treatment and disposal practices. One earlier EPA reference provides an estimate of the fraction of the total waste mass that was estimated to be treated or disposed in an environmentally acceptable manner in about the 1977 time frame (Ref. 19). The data in this reference appears to be reasonably consistent with the data from Reference 7, and is presented as Table A-17 (Ref. 19). As shown, about 90% of the waste generated in 1977 was estimated to be disposed in an inadequate manner. In terms of landfill disposal, which is the disposal method of principal interest in this report, only about 7% of the waste disposed into landfills in 1977 was estimated to be disposed in an environmentally adequate manner. There is no breakdown, however, of the different levels of adequacy for on-site vs. off-site treatment and disposal.

The future environmental adequacy of hazardous waste management is likely to show considerable improvement, although it is difficult to project when unsuitable waste management methods will be totally eliminated. The Resource Conservation and Recovery Act (RCRA) was enacted in 1976 and called for a national program to control hazardous waste. All waste identified as hazardous in regulations issued under Subtitle C of RCRA are to be tracked in manifests from where they originate to their final disposition. The disposition of the waste--whether treatment, storage, or disposal--is regulated using permits issued by either the EPA or an authorized State. Regulations for carrying out Subtitle C of RCRA are set forth in 40 CFR Parts 260 to 266, 270, and 271.

The composition of the waste that would be sent to hazardous waste disposal facilities is difficult to predict. One source provides some indication in that it lists the types of contaminants involved in damage incidents by disposal method. This data was obtained from an EPA compilation of 421 industrial and pesticide waste-related damage case studies (Ref. 19). A summary of this data, which was obtained prior to promulgation of the comprehensive RCRA regulations discussed above, is presented in Table A-18. As shown, the contaminants receiving the highest number of citations in the case study include (for land disposal methods) Cr, Fe, miscellaneous inorganics, phenols, miscellaneous organics, and pesticides. This data may not be nationally representative, however, "since 65 of the 421 cases

Table A-17. Estimated Environmental Adequacy of Disposal Practices For Potentially Hazardous Wastes*

Disposal Practice	Percent of Total Wet Weight of Potentially Hazardous Wastes
Environmentally Inadequate:	
Unlined Surface Impoundments	48.3
Non-Secure Landfills	30.3
Uncontrolled Incineration	9.7
Deep-Well Injection	1.7
Landspreading	.3
Use on Roads	<.1
Sewered	<.1
Total:	90.4
Environmentally Adequate:	
Controlled Incineration	5.6
Secure Landfills	2.3
Recovery	1.7
Lined Surface Impoundments	<.1
Wastewater Treatment	<.1
Autoclaving	<.1
Total:	9.6

*Based on annual generation in 14 key industries during the period 1973-1975.

studied were obtained from an incomplete survey of one state that already has a permit system for landfills and surface impediments. The most flagrant environmental offenses generally occur in those states that do not have regulatory programs for industrial waste disposal. Further, such states generally do not have adequate documentation of damages" (Ref. 18). The mechanisms involved in the damage incidents have also been listed by disposal methods, and this list is provided as Table A-19 (Ref. 18). Of 302 incidents at a landfill, dump, or other land disposal methods, fires and explosions accounted for 14 such incidents (4.6%).

000255

Table A-18. Contaminants Involved In Damage Incidents By Disposal Method

Containment	TOTAL	Disposal Method*				
		Surface Impoundments	Landfills Dumps	Other Land Disposal**	Smelting Slag, Mine Tailings	Storage
As	19	5	4	10		
Cd	5	3	1	1		
Cr	33	11	9	12	1	
Cs	1		1			
Cu	20	6	4	7	3	
Fe	40	10	20	6	4	
Hg	11	1	1	9		
Mn	26	3	15	4	4	
Ni	13	5	2	5	1	
Pb	22	5	6	8	3	
Zn	22	9	5	5	3	
Cl^-	27	11	6	9	1	
CN^-	19	6	4	9		
F^-	8	5		3		
NH_3	14	6	2	6		
NO_3^-	16	6	2	7		1
SO_4=	18	9	2	5	2	
Inorganic Acids	27	9	4	10	4	
Miscellaneous Inorganics	83	21	25	29	6	2
PCBs	3		1	2		
Petrochemicals	27	10	5	10		2
Phenols	31	9	10	12		
Misc. Organics	88	19	25	39		5
Bacteria	11	1	2	8		
Pesticides	71	1	6	57		7
Radioactive	9	2	3	1	1	2
Unspecified Leachate	25	5	18	1	1	
Total	689	178	183	275	34	19

* Cases studied: 421
**Disposing on vacant properties, on farmland, spray irrigation, etc.

Table A-19. Mechanisms Involved in Incidents of Damage By Disposal Method(a)

	Surface Impoundments	Landfills, Dumps	Other Land Disposal(b)	Storage of Wastes	Smeltings Slag, Mine Tailings
Number of Cases	89	99	203	15	15
Damage of Mechanism (number of cases)					
Groundwater (159)	57	64	117	10	11
Surface Water (170)	42	49	71	-	8
Air (17)	3	5	9	-	-
Fires, Explosions (14)	-	11	3	-	-
Direct Contact Poisoning (52)	1	6	40	5	-
Wells Affected(c) (140)	32	28	74	4	2

(a) The tabulation is on 421 cases studied thus far. The numbers in the matrix add up to more than 421, because several damage incidents involved more than one damage mechanism.

(b) Haphazard disposal on vacant properties, on farmland, spray irrigation, etc.

(c) Not included as a damage mechanism.

Note: The data presented in this table have been derived solely from case studies associated with land disposal of industrial wastes.

000257

Another reference (Ref. 22) reports a survey of the types of wastes accepted by 64 hazardous waste management facilities. The percent that each type of waste is accepted among the 64 facilities is given below.

Waste Type	% of Time Waste Type is Accepted
Caustics	8.1
Acids	9.7
Heavy Metals in Solution	7.5
Cyanide	5.3
Solvent/Cleaners	12.8
Halogenated Organics	5.3
Still and Tank Bottoms	8.8
Paint Sludges	7.5
Sludges with Heavy Metals	9.1
Arsenic	3.1
Oily Water	3.4
Oil Wastes	10.6
Radioactive	0.9
Pesticides	6.9
Explosives	0.9

Obviously much of the waste is in a liquid or semi-liquid form.

One of the problems in making projections is that hazardous waste management facilities frequently accept only particular types of wastes from particular sources or companies. For example, a small facility may be set up to handle nothing but oil wastes from the local oil refinery businesses. This can be compared to the types of wastes generally sent to municipal solid waste facilities, which as discussed above generally consist of paper, metal, glass, and other materials in reasonably constant volume fractions. However, if one were to pick the types of waste that a hazardous waste facility might accept that would be somewhat similar to "de minimis" radioactive waste, good candidates would probably be waste from the chemical and drug industries. One reference estimates that about 20% of the waste from the chemical and drug industries is process waste, and the remainder is trash (Ref. 6).

A.3.2 Hazardous Waste Projections

As for municipal waste, it is convenient to project hazardous waste generation rates by NRC Region for the time period from 1980 to the year 2000. This is open to uncertainties, however, since the definitions of what exactly is hazardous and what exactly is subject to RCRA requirements are currently in a state of flux, not to say confusion. In addition, there appear to be some inconsistencies in projected growth rates from different sources. To illustrate, yearly estimated generation rates (in millions of MT (wet)) from various sources are listed below:

Year	Generation Rate (Million MT (Wet))	Reference
1974	28.755	19
1977	34.174	19
1977	35.5	7
1980	41.235	20
1981	42.694	20
1983	38.089	19

Of course, References 7 and 19 precede Reference 20 by several years, and the question that one is left with is whether the general increase in waste mass over the years represents an actual increase or merely more accurate estimates for the later reference than for the earlier references. Basing a projection on the data from all the references, one can arrive at an average increase in waste generation of about 5-6% per year. Basing a projection merely on Reference 20, one can arrive at an average increase in waste generation of only about 3.5% per year.

The latter approach is the more conservative case, in terms of waste disposal by less restrictive means, and will be used in this appendix. Assuming a growth rate of 3.5% per year, this results in a hazardous waste generation rate (wet) of 41 million MT in 1980 and 82 million MT in the year 2000, or an average over the 20-year period of 59.4 million MT.

Of this waste mass, some would be treated and disposed by the waste generator and some would be treated and disposed by an off-site hazardous waste management service. The latter is of principal interest in this appendix. Projections of off-site hazardous waste management practices by NRC Region are given in Table A-20. These projections are made assuming a proportionate continuation of existing waste management practices, and are given in terms of projected masses for the year 1980, the year 2000, and as an average over the 20-year period.

Some of the listed waste treatment options will involve generation of a secondary waste stream which will probably require disposal at a hazardous waste disposal facility. A byproduct of incineration, for example, will consist of ashes and other residues. Based upon data given previously, secondary waste streams are assumed to be generated which consist of 5% of the waste mass incinerated, 5% of the waste mass sent to resource recovery, and 10% of the waste mass sent to chemical treatment. The total projected waste mass eventually disposed by off-site services is given in Table A-21.

000259

Table A-20. Projections of Off-Site Hazardous Waste Treatment/Disposal by NRC Region and Waste Management Option

NRC Region	Mass per Waste Management Option (Million MT (wet))						
	Landfill	Land Treatment/ Solar Evaporation	Incineration	Chemical Treatment	Resource Recovery	Deep Well Injection	Total NRC Region
I	(28)**	(0)	(4.5)	(56)	(12)	(0)	
1980*	0.58	0	0.09	1.16	0.25	0	2.08
2000	1.16	0	0.19	2.32	0.50	0	4.14
ave.	0.84	0	0.14	1.68	0.36	0	3.00
II	(36)	(7)	(10)	(42)	(5)	(0)	
1980	0.60	0.12	0.17	0.70	0.09	0	1.67
2000	1.19	0.24	0.33	1.39	0.17	0	3.31
ave.	0.86	0.17	0.24	1.01	0.12	0	2.40
III	(28)	(0)	(8)	(39)	(13)	(12)	
1980	0.74	0	0.20	1.03	0.34	0.32	2.64
2000	1.47	0	0.39	2.05	0.68	0.63	5.26
ave.	1.07	0	0.29	1.49	0.50	0.46	3.81
IV	(41)	(5)	(6)	(11)	(.2)	(38)	
1980	0.73	0.08	0.10	0.20	0.004	0.68	1.78
2000	1.45	0.16	0.21	0.39	0.007	1.35	3.54
ave.	1.05	0.12	0.15	0.28	0.005	0.98	2.57
V	(52)	(24)	(2)	(21)	(.4)	(0)	
1980	0.64	0.30	0.03	0.26	0.005	0	1.23
2000	1.27	0.59	0.06	0.51	0.01	0	2.45
ave.	0.92	0.42	0.04	0.37	0.007	0	1.77
	(37)***	(7.2)	(6.1)	(34)	(6.1)	(10)	

*Projected waste masses for the year 1980, the year 2000, and the average over the 20-year period.

**Numbers in parentheses are the assumed percentage of the total waste mass per NRC Region treated/disposed by a particular waste management option.

***Average percent across all regions.

Table A-21. Projected Waste Mass Ultimately Disposed at Off-site Hazardous Waste Disposal Facilities

	Disposed Mass per NRC Region (million MT (wet))					
Year	I	II	III	IV	V	Total
1980	0.71	0.68	0.86	0.76	0.67	3.68
2000	1.43	1.35	1.73	1.50	1.32	7.33
ave.	1.03	0.98	1.26	1.09	0.96	5.32

Of particular interest is the applicability of each of the listed hazardous waste treatment and disposal options to radioactive waste disposal by less restrictive means. Landfill disposal is obviously applicable, while the options of deep well injection and land treatment/solar evaporation would both be generally inapplicable. Both these latter waste treatment/disposal options involve liquid wastes in bulk quantities, and use of these options is dominated by the oil acquisition and refining industries in addition to some petrochemical industries. Radioactive material suitable for disposal by less restrictive means would typically be a solid material such as ordinary trash.

Similarly, resource recovery is not considered to be a generally applicable treatment/disposal method for radioactive material disposed by less restrictive means. Most resource recovery operations involve the recovery of solvents through distillation techniques. Other resource recovery operations include reprocessing of mercury and other metals, petroleum re-refining, and automobile battery recovery (Ref. 23). Such recovery operations are typically specific to particular materials, and the feed to the operations is typically obtained by contracting with specific industrial waste generators. It would appear that in most cases the feed for recovery operations is so different from the forms of possible candidates for de minimis waste disposal that hazardous waste recovery does not appear to be a likely candidate for re-entry of de minimis waste into environmental pathways. In any case, known transfer of de minimis radioactive waste to hazardous waste recovery operations may be precluded by regulation.

Incineration can be considered partially applicable to de minimis waste disposal. Most of the hazardous waste being incinerated consists of solvents and oily wastes, although some sludges and solids are also incinerated. Most radioactive materials which are candidates for disposal by less restrictive means consist of solids, and at first glance it would appear that little incineration of de minimis material as a hazardous waste would actually take place. However, there is continual development of incineration processes for solid hazardous wastes, and the fraction of the hazardous waste incinerated which consists of a solid may increase in the future. Reference 4, for example, states that "high temperature incineration systems can be used to dispose of organic compounds such as halogenated hydrocarbons,

000261

vinyl chloride monomers, pesticides, herbicides, and off-specification pharmaceuticals. Nearly any type of organic waste can be incinerated with the exception of materials with high metal concentrations....." It should be recalled, however, that with any complex process such as incineration, it is a long way from an experimentally developed process to a routinely operating facility. Incineration is currently generally more expensive than any of the other waste treatment/disposal options. Another problem is that the incineration process generates liquid and airborne effluents which contain portions of the hazardous waste contents. Public opposition to hazardous waste incinerator operation has therefore resulted (Ref. 24). The residue from incineration must also be disposed in most cases as a hazardous waste. These types of problems have in the past resulted in limited use of incineration as a hazardous waste treatment option and will probably continue to do so in at least the near future.

It is somewhat difficult to judge the applicability of "chemical treatment" to de minimis waste disposal, since a variety of different chemical, physical, or biological processes may be involved. Most of the waste so treated appears to consist of liquids, while most of the "non-liquid" waste so treated appears to consist of sludges. Most de minimis material, conversely, will consist of solids. In addition, from a review of Table A-15, it would appear that most treatment processes are geared to specific types of wastes produced by specific industries. That is, an operator of a treatment facility would contract with a limited number of waste generators whose waste streams so treated will be: (1) in large enough quantities to make such treatment economically worthwhile to the treatment facility operator, and (2) of a known and relatively uniform composition. This latter requirement would be a matter of facility safety. The relatively small volumes of radioactive de minimis material sent to a hazardous waste treatment/disposal facility would probably be in insufficient quantity to justify treatment, and would probably not be considered compatible with the treatment process. Such de minimis materials would probably be landfilled.

Given the above, it can be seen that almost all solid de minimis waste material treated as a hazardous waste would probably be landfilled, while it is possible that a small fraction could be incinerated. An assumption of 90% landfill and 10% incineration would probably be conservative. The conservatively high incineration fraction would tend to account for possible treatment of very small quantities of de minimis waste by chemical treatment methods.

A remaining issue is the estimated gross composition of "solid" hazardous wastes sent to landfills. This estimate is as follows:

Waste	Percent
Combustibles	35
Glass	5
Metallic waste	10
Wet sludges	20
Other (includes process wastes, ash, etc.)	30

REFERENCES

(1) Brunner, D.R. and D.J. Keller, "Sanitary Landfill Design and Operation," SW-65ts, U.S. Environmental Protection Agency, 1972.

(2) U.S. Nuclear Regulatory Commission, "Disposal of Ionization Type Smoke Detectors Used in the Home," undated.

(3) U.S. Environmental Protection Agency, "Solid Waste Facts, A Statistical Handbook," SW-694, EPA Office of Water and Waste Management, October 1979.

(4) Council on Environmental Quality, "Environmental Quality-1981," 12th Annual Report of the Council on Environmental Quality.

(5) U.S. Environmental Protection Agency, "Hazardous Wastes," SW-138, EPA, 1975.

(6) Mantell, C.C., "Solid Wastes: Origin, Collection, Processing, and Disposal," John Wiley and Sons, 1975.

(7) International Research and Technology Corporation, "Hazardous Waste Regulatory Analysis," briefing to U.S. Nuclear Regulatory Commission Division of Waste Management, January 30, 1978.

(8) U.S. Nuclear Regulatory Commission, "Draft Environmental Impact Statement on 10 CFR Part 61: 'Licensing Requirements for Land Disposal of Radioactive Waste,'" NUREG-0782, Office of Nuclear Material Safety and Safeguards, September 1981.

(9) U.S. Nuclear Regulatory Commission, "Final Environmental Impact Statement on 10 CFR Part 61: 'Licensing Requirements for Land Disposal of Radioactive Waste,'" NUREG-0945, Office of Nuclear Material Safety and Safeguards, November 1982.

(10) U.S. Department of Commerce, "Statistical Abstract of the United States, 1980," 101st Edition, December 1980.

(11) Pavoni, J.L., J.E. Heer, Jr., and D.J. Hagerty, "Handbook of Solid Waste Disposal: Materials and Energy Recovery," Van Nostrand Reinhold Company, New York, 1975.

(12) Bond, R.G., and C.P. Straub, and R. Prober (eds.), "CRC Handbook of Environmental Control, Volume II: Solid Waste," Chemical Rubber Company Press, Cleveland, Ohio, 1973.

(13) Snyder, N.W., "Pyrolysis of Municipal Solid Waste," Energy and Resource Recovery From Industrial and Municipal Solid Wastes, AIChE Symposium Series, No. 162, Volume 73, 1977.

(14) Buckley, D.W., et al., "Environmental Assessment of Consumer Products Containing Radioactive Material," NUREG/CR-1775, Science Applications, Inc., for U.S. Nuclear Regulatory Commission, October 1980.

000263

(15) Tchobauoglous, G., H. Theisan, and R. Eliassen, "Solid Wastes: Engineering Principles and Management Issues," McGraw-Hill Book Company, 1977.

(16) Lowe, R.A., M. Loube, and F.A. Smith, "Energy Conservation Through Improved Solid Waste Management," SW-125, U.S. Environmental Protection Agency, 1974.

(17) U.S. Environmental Protection Agency, "Guidance Manual for the Classification of Solid Waste Disposal Facilities" (Draft), EPA Office of Solid Waste, November 1979.

(18) Morey, B. and A. Gupta, "A Review of Resource Recovery Technology," Energy and Resource Recovery from Industrial and Municipal Solid Wastes, AIChE Symposium Series, No. 162, Volume 73, 1977.

(19) U.S. Environmental Protection Agency, "State Decision-Makers Guide for Hazardous Waste Management," SW-612, EPA, 1977.

(20) U.S. Environmental Protection Agency, "Hazardous Waste Generation and Commercial Hazardous Waste Management Capacity, An Assessment," SW-894, EPA, December 1980.

(21) Council on Environmental Quality, "Environmental Quality - 1980," 11th Annual Report of the Council on Environmental Quality.

(22) Farb, D. and S.D. Ward, "Information About Hazardous Waste Management Facilities," SW-145, U.S. Environmental Protection Agency, February 1975.

(23) Straus, M.A., "Hazardous Waste Management Facilities in the United States - 1977," EPA/530/SW-146.3, U.S. Environmental Protection Agency, 1977.

(24) U.S. Environmental Protection Agency, "Siting of Hazardous Waste Management Facilities and Public Opposition," SW-809, Centaur Associates, Inc., for U.S. EPA, November 1979.

APPENDIX B

RESOURCE RECOVERY

TABLE OF CONTENTS

Section		Page
B.1	MATERIALS RECOVERY	B-1
B.1.1	Introduction	B-1
B.1.2	Recycle of Specific Materials	B-3
B.1.3	Methods and Equipment for Separation	B-10
B.1.4	Materials Recovery Systems	B-15
B.2	ENERGY RECOVERY	B-20
B.3	MUNICIPAL RESOURCE RECOVERY FACILITIES	B-29
REFERENCES		B-32

LIST OF TABLES

Table		Page
B-1	Consumption of Selected Recycled Materials	B-2
B-2	Trends in Material Recovery from Post-Consumer Municipal Waste, 1971-1975, by Type of Material	B-3
B-3	Non-Ferrous Metals In-House Recycling Rates	B-4
B-4	Out-of-House Recovery of Non-Ferrous Metals	B-6
B-5	Flyash Generation and Use for 1969	B-10
B-6	Current Size Reduction Equipment and Potential Applications to Municipal Solid Waste	B-12
B-7	Summary of Operational U.S. and Canadian Mass Burning Waterwall Systems	B-21
B-8	Municipal Resource Recovery Systems: 1979	B-30

LIST OF FIGURES

Figure		Page
B.1	Operation of a Typical Hammermill	B-13
B.2	Operation of a Typical Wet Pulper	B-13
B.3	Representative Schematic of Fairfield-Hardy Composting System	B-17
B.4	Diagram of Franklin, Ohio Fiber Recovery System	B-19
B.5	Saugus, Massachusetts Waterwall Incinerator	B-23
B.6	Schematic of Ames, Iowa Plant	B-23

000267

APPENDIX B. Resource Recovery

The concepts of resource recovery are manifested in various related fields of activity. These concepts principally comprise: (a) recovering materials from refuse in a relatively pure form suitable for use as raw materials for products similar to those discarded; (b) recovering materials that because of their previous application or contamination cannot be totally reclaimed but may be utilized in lower grade applications; (c) changing, in form and substance, large portions of the waste into new products; and (d) burning waste directly to produce energy or converting waste into a storable fuel such as oil or gas (Ref. 1). The main thrust of current resource recovery efforts is directed at the vast quantity of municipal and other solid waste material generated each year.

Current resource recovery activities can be separated into two general categories:

(1) Materials Recovery: recovery of specific materials for reuse either in their existing form or some modified or derived form; and

(2) Energy Recovery: conversion of the materials into a fuel or directly into energy.

An example of the first category of activity would include recovery and reuse of newspaper as a fibrous material--as newsprint, wallboard building materials, or roofing materials. An example of the second category of activity would include converting the recovered newspaper into an energy source (e.g., incinerating the paper and recovering the heat energy).

The remaining portion of this appendix discusses the above two categories of resource recovery. Section B.1 addresses materials recovery while Section B.2 addresses energy recovery. Section B.3 summarizes the principal resource recovery systems currently in operation, under construction, or planned.

B.1 MATERIALS RECOVERY

B.1.1 Introduction

It is apparent that much of the waste materials currently being discarded are potentially recoverable, and there has been considerable interest in the development of practical and economical materials recovery systems. The success of the various materials recovery efforts has been quite variable; recovery efforts have been extremely successful for some materials and quite unsuccessful for others. The potential market for recovery of useful materials is enormous, and an idea of the extent of the "existing" market (as of 1969-70) can be obtained by consulting Table B-1 (Ref. 2).

Table B-1 includes recycle by "in-house" and "out-of-house" methods. As an example of this distinction, consider the recycle of ferrous metal. An in-house source of recovered materials would be scrap from metal trimming or

Table B-1. Consumption of Selected Recycled Materials[a]

Material	Total Consumption	Consumption of Recycled Material (1000 Tons)	Recycled Material Value ($ Million)	Recycled Material as Percent of Total Consumption
Aluminum	4,590	1,056	553	23
Copper and copper base alloys	3,240	1,489	1,460	46
Ferrous metal	131,000	65,000	3,000	49
Lead	1,540	585	175	38
Nickel and nickel base alloys	145	42.1	209	29
Zinc	1,520	182	53	12
Precious metals (gold, silver & platinum)	2.0E+8[b]	7.9E+7[b]	487	40
Paper	60,000	11,400	250	19
Textiles	5,190	1,400	84	27

[a]1969 figures with the exception of ferrous materials which are 1970 estimates.

[b]Measured as Troy ounces.

0002269

other process operations. However, if ferrous metal is recovered from municipal waste at a recyling center or from junked automobiles, then this would be an out-of-house waste source. The trends in out-of-house recovery of a number of materials are summarized in Table B-2 (Ref. 1).

Another concept is one of recycle by means of "source separation," in which portions of a waste stream are separated by citizens prior to disposal of the waste. Source separation accounts for much if not most of the current out-of-house recycling of paper and glass waste. Source separation recycle activities do not provide much opportunity of recycle of de minimis waste materials, since regulations allowing disposal of waste by less restrictive means may be written as to preclude source separation recycle of de minimis waste. The potential for disposed waste entering the recycle stream would arise from recovery operations carried out at a recycle center (e.g., at a resource recovery facility).

B.1.2 Recycle of Specific Materials

A number of materials may be potentially recycled, and these can be separated into six major groups: metals, glass, paper, plastics, wood, and textiles. A

Table B-2. Trends in Material Recovery from Post-Consumer Municipal Waste, 1971-1975, by Type of Material[a]

Material recycled	1971	1972	1973	1974	1975
Paper and paperboard[b]	7495	8075	8730	8430	6830
% of gross paper and board discards	15.9	16.0	16.5	16.3	15.5
Aluminum	20	30	35	52	87
% of gross aluminum discards	2.4	3.2	3.4	5.0	8.7
Ferrous metals[c]	140	200	300	400	500
% of gross ferrous discards	1.3	1.4	2.4	3.4	4.4
Glass[b]	221	273	306	327	368
% of gross glass discards	1.8	2.1	2.3	2.5	2.7
Rubber (including tires and other)	257	245	219	194	189
% of gross rubber discards	8.9	7.9	6.8	6.1	6.9
Total materials	8133	8825	9590	9400	7975
% of gross nonfood product waste	9.5	9.6	10.1	10.0	9.3
% of total post-consumer waste	6.1	6.2	6.7	6.5	5.9

[a]In thousands of tons.

[b]Most metal and glass recovery is performed by source separation methods.

[c]These estimates for ferrous metal recycling are highly inferential and preliminary. There are no regularly collected statistics on this category. EPA estimates are based in part on work by the Resource Technology Corporation for the American Iron and Steel Institute regarding magnetic separation facilities.

seventh group, which does not involve recycle so much as utilization of an otherwise waste material, consists of "flyash" from coal power plants and incinerators. In terms of de minimis waste disposal, recycle of metals and glass is of primary importance. Most paper recycling is performed by in-house recycling or source separation methods, and therefore afford little opportunity for recycle of de minimis radioactive materials. Recycle of wood, plastics, and textiles is almost totally performed by in-house methods. A brief discussion of recycle activities for each of the above major groups follows. Information is generally dated from the 1969-70 time frame (Ref. 2), although some updated data is also available.

Metals. Considerable recycling of metallic waste is already being performed. Recycling rates for in-house wastes in the metal processing industries are fairly high, and vary depending upon the degree to which the metals are used in composite materials. For example, clean steel from metal trimming operations may be readily reused. However, galvanized steel, which is a composite of steel and zinc, is not as readily reused since it must be separated into components using a chemical process. Of the 131 million tons of ferrous steel produced in 1970, about 25 million tons was generated by in-house recycle sources. This 25 million tons represented about 100 percent of the in-house steel waste produced by steel processing operations. The in-house recovery rates for other, non-ferrous, metals is given in Table B-3 (Ref. 2).

Out-of-house recycle rates for ferrous metals is also significant, although in the past several years the market for scrap metal has been depressed. As of about 1970, over 40 million tons of ferrous scrap metal was used in steel production. This recycle rate was practically constant from the years 1955 to 1970, rising by about 8% over this period from 37 million tons to just over 40 million tons; by contrast, total steel production rose by about 15% during this time period. Much of this material recovery was performed prior to mixing with municipal refuse (e.g., recovery of junked automobiles). At present, about one-fourth of the scrap steel recycled originates from discarded automobiles (Ref. 1). In addition, something over 400,000 tons of shredded

Table B-3. Non-Ferrous Metals In-House Recycling Rates

Material	1000 Tons of In-House Waste Recycled (1969)	Percent of In-House Waste (1969)
Aluminum	855	100
Copper	832	100
Lead	88	100
Zinc	141	68
Nickel	17.7	82
Stainless steel	219.5	100
Precious metals	(Troy ounces)	-
Gold	1,350,000	90
Silver	32,000,000	93
Platinum	540,000	90

000271

tin cans were used in 1970 in copper leaching operations in the western states (Ref. 2). In 1973, about 4 million tons of steel cans were generated in the United States and only about 2% were recovered (Ref. 1).

There are a number of reasons for this general depression in the scrap ferrous metal market, one of which is the current general depression in the overall steel industry itself. Other factors include high transportation costs, changes in methods of steel production, and restrictive impurity reguirements. Contributing to the first factor are freight rates set by the Interstate Commerce Commission which favor transport of virgin materials (ores) as opposed to recycled items.

The last two factors are technical in nature. Over the years, steel production has shifted from open-hearth furnaces to basic oxygen furnaces. The basic oxygen furnace produces steel in a much shorter processing time than does the open-hearth furnace. Since scrap metal contains contaminants and takes longer to melt in the furnace, the scrap metal portion of the furnace charge must be reduced.

Also of significance is the fragile metallurgy of steel production, which leads to restrictions in the amounts of contaminants allowed in the smelted steel. The use of different types of metal as composites has increased over the years, which reduces the marketability of recycled scrap. Only a very small amount of extraneous material such as copper, tin, or other non-ferrous metal is required to significantly affect the quality of steel produced according to existing manufacturing methods. For example, the tin coating on steel cans reduces the ductility of the steel while the lead in the soldered seam of the cans tends to sink to the bottom of the furnace and infiltrate the refractory material. This means that recycled tin cans are generally not used for steel production but are used almost exclusively in the copper industry for leaching operations. Use in leaching operations can account for only a fraction of the total amount of tin cans produced each year, and consequently the market potential for recycled steel cans is low.

It is possible that the market for scrap metals could, like the economy, rise in the future. More favorable freight rates may be arranged. A newer furnace design, the electric furnace, can accommodate a charge consisting totally of ferrous scrap, although at present it accounts for less than 20% of the steel being produced. (The general state of the economy, however, restricts large capital investments, and electrical costs have also risen significantly over the last several years.) Newer metal cans are starting to be used which eliminate tin coatings. Alternatively, recovered cans may be put through a detinning procedure although this adds an expense to the recyle process. Finally, the development of large metal shredders (e.g., for automobiles) enhances the ability to separate components of scrap materials containing different types of metals, thus increasing the value of the scrap.

Most non-ferrous metals are recycled to a greater degree than ferrous metals, which is mostly due to smaller existing supplies of ore. Table B-4 lists the out-of-house recycle amounts for several non-ferrous metals for the year 1969 (Ref. 2).

000272

Table B-4. Out-of-House Recovery of Non-Ferrous Metals

Material	1000 Tons Recycled	Percent of Non-In-House Scrap Recycled
Aluminum	201	15
Copper	657	40
Lead	497	38
Zinc	41	4
Nickel	24.5	29
Stainless steel	158.5	76
Precious metals	(Troy ounces)	-
Gold	450,000	64
Silver	43,000,000	65
Platinum	1,660,000	98

Of interest is the apparent low recycle rates for zinc, nickel, and aluminum. The low apparent rate of zinc recovery is due to non-recoverable corrosion of galvanized steel products, and due the fact that much of the zinc that is recovered is incorporated into brass products. A similar situation exists for nickel. The low recovery rate for aluminum is difficult to explain, since there is little or no problem with contamination of aluminum by other metals and the energy requirements to produce an aluminum ingot are much smaller for scrap metal than for bauxite ore. Certainly one of the reasons is the extensive use of aluminum in throw away packaging. Such a use makes aluminum recovery much more difficult, since the discard material is very diffusely mixed with large volumes of municipal waste. Some progress has been made, however, through the use of can (and other forms of clean aluminum scrap) reclamation centers. Recovery of aluminum cans totaled 2,000 tons in 1970, 19,000 tons in 1971, and 28,000 tons in 1972 (18% of the total number of aluminum cans produced in 1972) (Ref. 2). Currently, only about 4% of the approximately 1 million tons of aluminum cans, aluminum foil, and aluminum scrap in discarded automobiles is being recovered, although some aluminum can recycling operations have claimed 15-20% recovery in some urban areas (Ref. 1). Much additional information on aluminum recycle is available in Reference 3.

Glass. The manufacture of glass and glass products is quite extensive in this country and is expanding. For example, the consumption of glass for packaging (except beverage containers) totaled 5.1 million tons in 1958, 4.9 million tons in 1971, and 6.6 million tons in 1980. Consumption of glass in beverage containers totaled 6.2 million tons in 1972 (Ref. 6). In 1981, production of all types of glass containers totaled 13.3 million tons, of which about 8.5 million tons was beverage containers (Ref. 7). Millions of tons of glass were also used for many other applications such as windows or glass foam (Ref. 6).

As of about 1970, about 5% of all the glass annually produced in the United States originated from recycled material. Practically all of this recycled scrap originated as clean in-house scrap glass ("cullet") from two major sources: bottle recycling and manufacturing of sheet and plate glass. Most of the cullet originating from bottle recycling is due to in-house breakage

000273

and other waste from breweries, dairies, soft drink plants, and other bottling facilities. Most of the sheet and plate glass waste comes from various industrial operations such as manufacture of windows, doors, and automobile window glass. Recycled cullet melts at a much lower temperature than do the virgin materials used in glass manufacture, and so glass manufacturers are eager to obtain sources of high quality cullet. The problem for glass recycle activities arises in the phrase "high quality." Purity standards for recycled cullet are fairly high and while these standards may be easily met by in-house sources such as a window manufacturer, they are significantly harder to meet by out-of-house sources such as a recycle center for municipal waste.

For maximum marketability, cullet should be clean, no greater than a specified small size, and colorless (termed "flint" cullet). The market value of the recycled cullet drops dramatically when any of the three criteria are not met. The presence of contaminants weakens the strength of the glass, and a small particle size is needed to allow rapid dissolution. For maximum value, cullet should not exceed one particle above 20 mesh in 18 kg of glass. There is also a minimum size specification (Ref. 4). Colorless glass accounts for 60-70% of the total glass produced (Ref. 4), and only a small percentage of brown or green glass can ruin the color of an entire batch of new clear glass. Therefore, clear glass must be separated from colored glass by a significant amount, or else the market value of the clear glass is significantly reduced to that of colored glass.

Another problem is that available glass separation processes seem to be relatively inefficient and also seem to work at cross purposes to the three criteria discussed above. Hand sorting methods are slow, labor intensive (and therefore costly), prone to error, and require large cullet sizes. Optical sorting systems appear to be more or less successful at separating glass of different colors, but require a mixed glass feed which contains few impurities other than glass. In addition, coarse cullet sizes are required for efficient use, which mitigates against achieving the size criteria. In addition, both hand and optical sorting systems would still require washing. Froth flotation systems operate best using small cullet sizes and wash the cullet as part of operation, but cannot separate by color. Of course, a combination of methods could be used to achieve the highest quality cullet, but this adds expense. (The various glass separation processes are discussed in more detail in Section B.1.3.)

Given the difficulty of achieving high quality cullet by out-of-house recovery techniques, research has been devoted to finding alternative uses for low quality cullet. One possible use is to mix the cullet with other inorganics (rocks, ceramics, brick, bone, etc.) and use as a road fill, or include the material in an asphalt mix to produce "glassphalt." Other possible uses include formed glass structural products, rock wool, tiles, wall panels, foam insulations, or slurry seals for roads (Refs. 2, 4).

Currently, about 13 million tons (12 million metric tons) of glass is discarded annually of which only about 3% is recovered (Ref. 1).

Paper. In 1969, approximately 11.4 million tons of paper and board wastes were recycled, and of this total approximately 1.7 million tons were in-house wastes. These in-house wastes include wastes from cutting, trimming, and processing operations in printing houses, envelope plants, and card plants, and from overruns in the newspaper industry. About 90% of all in-house paper wastes are recovered and recycled (Ref. 2).

Paper recycled from out-of-house sources is generally done through source separation methods since, like in-house recycle sources, source separation provides the greatest likelihood of achieving a relatively uncontaminated recycle product. Once a paper waste stream is mixed with other municipal solid wastes, the difficulty of separation from the other materials combined with the inherent high levels of contamination discourage recycle activities. A more likely recovery scenario for paper mixed with other wastes would be incineration combined with heat recovery.

Even given a clean recycle stream, recycled paper requires a considerable amount of processing for it to be reused. For example, recycled newsprint must be separated from the other refuse, shredded, physically and chemically manipulated to separate individual fibers, deinked, and then returned to a paper mill. Since the recycle processing operations tend to weaken the paper fibers, recycled paper is of inferior grade and is generally used in applications where strength, uniform thickness, and color are not as important considerations (e.g., paperboard, roofing materials, some greeting cards).

Most of the out-of-house paper recycle activities involve industrial sources, although in recent years there has been some interest in separating and recycling paper from municipal sources--particularly regarding recycling of newsprint. Such activities, however, are generally focused in large metropolitan areas, where there may sufficient supplies of used newsprint and other paper products to support deinking and reprocessing mills. Current freight rates favor transport of virgin pulp materials rather than transport of recycled pulp.

Plastics. Almost all of the plastic waste that is recycled does so as an in-house activity. Once the plastic material is released for use by consumers, it is practically impossible to recycle it. To illustrate, consider that in 1970, about 18 billion pounds of various types of plastic items were produced in the United States. About 3.5 billion pounds of this plastic were lost as scrap during manufacturing and processing, of which about 2.5 billion pounds were recovered and recycled. The remaining 1 billion pounds of in-house plastic scrap was disposed as solid waste. Most of the remaining 14.5 billion pounds of plastic was also probably disposed as solid waste (Ref. 2).

Significant additional out-of-house recycle of plastic material is not likely to happen soon. Much of the plastic consists of packaging materials such as thin films or bubble packages. The material is fragile, flexible, has a very low density, and is generally mixed or contaminated with other organic materials such as food or paper. Plastics are thus very difficult to separate from other waste materials. Even if it could be separated economically, the low density of the plastic material can result in prohibitive transportation costs for the separated scrap. In addition, plastics are constructed of a variety of different formulations and combinations of hydrocarbons, and

000275

reblending all the different plastic types has proven to be difficult. It is possible that recycle and reuse could be made of food containers such as milk containers, although there is a much greater contamination problem with recycled plastic than with materials such as glass.

Wood. In-house recovery of wood products is already very extensive. In the past, much of the lumber mill wastes (sawdust, wood chips, bark slabs, etc.) were incinerated, although currently such mill wastes are quite often converted into paper pulp. About a quarter of the paper pulp generated each year in the United States orginates from waste from wood processing operations (Ref. 2).

Out-of-house recyle of wood is relatively insignificant. Some wood is recovered and reused from demolition operations, and a very small fraction is recovered from municipal waste and used in pulping operations. Out-of-house recovery of wood is likely to remain at insignificant levels, with the possible exception as a component of a refuse derived fuel.

Textiles. As of about 1970, over 3 million tons of textile wastes were annually generated in the United States, of which about a third was in-house waste produced during cloth manufacture. About 30% of the in-house waste was recycled and used as wiping rags, fiber in high-grade paper, padding and batting, and fiber in roofing materials (Ref. 2).

Out-of-house recycling of textile wastes amounted to about one million tons per year, principally from source separation activities at industrial firms. Most such recycled waste is used as industrial wiping materials.

Flyash. As part of the combustion process at municipal waste incinerators and coal-fired power stations, tiny particulates are generated which are carried along with the escaping combustion gasses. These particulates consist of tiny particles of soot, cinders, dust, ashes, and miscellaneous partially burned materials, and are collectively referred to as "flyash." The sizes of the flyash particles will vary, but can typically range from about 9 to 120 microns in diameter (Ref. 2). Flyash particles will be removed from the combustion gasses prior to discharge through the plant chimney according to the removal efficiency of the particular airborne effluent treatment system installed at the power plant or incinerator. Such effluent removal systems often consist of electrostatic collectors or filters.

Most flyash is generated as a result of combustion of coal, and in 1980 about 36 million tons of flyash were generated as a result of consumption of about 480 million tons of coal. Most of this flyash was disposed by either slurrying the ash to an on-site settling pond or by conditioning the ash with up to 20% water and transporting it to an off-site land disposal area. A small fraction--about 10%--was placed to some use. An idea of the types of uses to which flyash may be put to is presented in Table B-5, which lists the results of a survey of coal flyash generation and utilization for the year 1969 (Ref. 3). The significant aspect in terms of this paper is that almost all uses involved binding the flyash with a solid matrix such as cement or asphalt. This would indicate that use of flyash from municipal incinerators burning de minimis quantities of radioactive waste would not be expected to be a significant environmental pathway for human exposures.

Table B-5. Flyash Generation and Use for 1969

	Tons
Generation:	21,091,406
Use*:	
o Mixed with cement clinker or cement (pozzolan cement)	40,701
o Mixed with raw material before forming cement clinker	132,226
o Partial replacement of cement in:	
a. Concrete products	170,450
b. Structural concrete	176,788
c. Dams and other mass concrete	161,874
o Stabilizer for road bases, parking areas, etc.	148,193
o Lightweight aggregate	263,564
o Fill material for roads, construction sites, etc.	203,100
o Filler in asphalt mix	110,829
o Miscellaneous (oil well cementing, grouting, mine fire and subsidence control, etc.	235,732
Total used:	1,643,457

*In addition, 284,036 tons were otherwise removed from plant sites at no cost to the utility.

B.1.3 Methods and Equipment for Separation

The following is a brief discussion of equipment and methodology used for separating waste into recyclable components. The emphasis is on separation at a centralized facility rather than source separation activities, since regulations can easily preclude disposal of de minimis waste through source separation recycle channels. The potential for de minimis waste disposed into mixed municipal waste being recycled through a centralized resource recovery facility needs, however, to be considered.

Concepts. One of the striking aspects of resource recovery and recycle operations is the large number of variations on the extent of activities, efficiencies of operations, process flow sheets, and possible equipment and methodologies. Resource recovery operations at a given facility may be possibly very limited, and utilized only as an adjunct to other activities. Conversely, recycle activities could be potentially very extensive.

An example of the former could be a municipal incinerator in which large metal items are occasionally removed from input waste prior to feeding the waste into the incinerator. The metal items are removed to avoid damage to the incinerator, and are subsequently recycled merely as a means of slightly reducing the costs of separating and disposing of the material. An example of the latter is a complex recovery facility which separates and sells scrap metal and glass as an ongoing process. (Most such complex recycle facilities exist today only on paper.) Obviously, the types of materials recovered and the efficiency to which the materials are recovered are highly variable depending upon individual facility designs, operating practices, and the principal focus of the process operation.

000277

Recycle activities may be differentiated in the use to which the remaining waste material is put to after the recyclable material is removed. For example, a facility may remove metal and glass streams from municipal waste and then dispose of the remainder. Or, a community may send its waste through a shredder, since the size reduction activity increases the disposal efficiency of the waste and thus reduces landfill requirements. Portions of the waste may or may not be removed for recycle. Some manner of limited reclamation activity may also be carried out at the landfill.

Most of the later designs for recycle facilities are centered around a processing operation for the organic fraction of the waste. Such a processing operation may be composting, pulping, or pyrolysis (to produce an organic fuel), but is generally incineration at a moderate temperature. Such incineration may or may not be accompanied by recovery of the heat energy for uses such as process heat or electricity. Systems designed to recover recycle materials following the processing operation are termed "back-end" systems, and an example is the Chicago Northwest Incinerator which recovers tin cans from ash and other residue following combustion (Ref. 2). The market value for the materials recovered using back-end systems is frequently low, since thermal processing can increase the difficulty of removing contaminants from recycled materials. Systems designed to recover material prior to the processing operation are termed "head-end" systems, and most of the design and development work on recycle operations has been concentrated on head-end systems. Material recovery with head-end systems is relatively inefficient, and there has been some interest in combined systems, although it may be unlikely that the increased recovery efficiency will offset the additional capital and operating costs.

Separation techniques and equipment. The most basic means of separating materials from refuse is by hand sorting. Hand sorting has been traditionally used in the past and will probably continue to be used at least to some extent in the future, if only as a means of separating large, bulky items (e.g., mattresses, appliances) from solid waste prior to further processing. Hand sorting suffers from a number of drawbacks, however, and is very unlikely to be used for the bulk of future recycle activities. One drawback is the possibility of human error which works against achieving a pure recycle product stream. Another drawback is that hand sorting is limited to pieces of a moderate to large size. The largest drawback is probably that it is just plain uneconomical. Hand sorting of refuse requires approximately 1½ to 2½ man-hours per ton of sorted refuse, and wage scales in the United States are generally too high to economically produce a recycled product which generally can be sold at only the lowest quality unit rates (Refs. 2, 5).

Given a mostly mechanical recycle operation, then, the first step is to transform the heterogeneous mixture of odds and ends that characterize municipal waste into a more homogeneous mass. This is principally because most of the machinery which has been designed to separate materials is derived from machinery used to process minerals, and such machinery is designed to operate with mostly homogenous mixtures.

In practice, this end is accomplished by sending the refuse through a size reduction step prior to the separations operations. The size reduction step has additional benefits if the organic fraction is to be composted or thermally decomposed (e.g., in the case of incineration, excess air requirements are reduced, grate sizes are reduced, and combustion is improved). There are a number of techniques by which size reduction can be accomplished, and Table B-6 lists several such equipment types along with their potential application to municipal solid waste (Ref. 2).

By far, the most common type of equipment proposed or used for solid waste size reduction is the hammermill, although use of shredders, rasp mills, and wet pulpers have also been attempted. Operation of a typical hammermill is illustrated in Figure B.1. Basically, hammers are fixed to a roter shaft which is turned, moving the hammers in an arc. Blocks or other obstacles

Table B-6. Current Size Reduction Equipment and Potential Applications to Municipal Solid Waste

Basic Types	Variations	Potential Application to Municipal Solid Waste
Crushers	Impact	Direct application as a form hammermill.
	Jaw, roll, and gyrating	As a primary or parallel operation on brittle or friable material.
Case disintegrators	Multi-cage or single-cage	As a parallel operation on brittle or friable material.
Shears	Multi-blade or single-blade	As a primary operation on wood or ductile materials.
Shredders, cutters, and clippers	Pierce-and-tear type	Direct as hammermill with meshing shredding members, or parallel operation on paper and boxboard.
	Cutting type	Parallel on yard waste, paper boxboard, wood, or plastics.
Rasp mills and drum pulverizers		Direct on moistened municipal solid waste; also as bulky item sorter for parallel line operations.
Disk mills	Single or multiple disk	Parallel operation on certain municipal solid waste fractions for special recovery treatment.
Wet pulpers	Single or multiple disk	Second operation on pulpable material.
Hammermills		Direct application or in tandem with other types.

000279

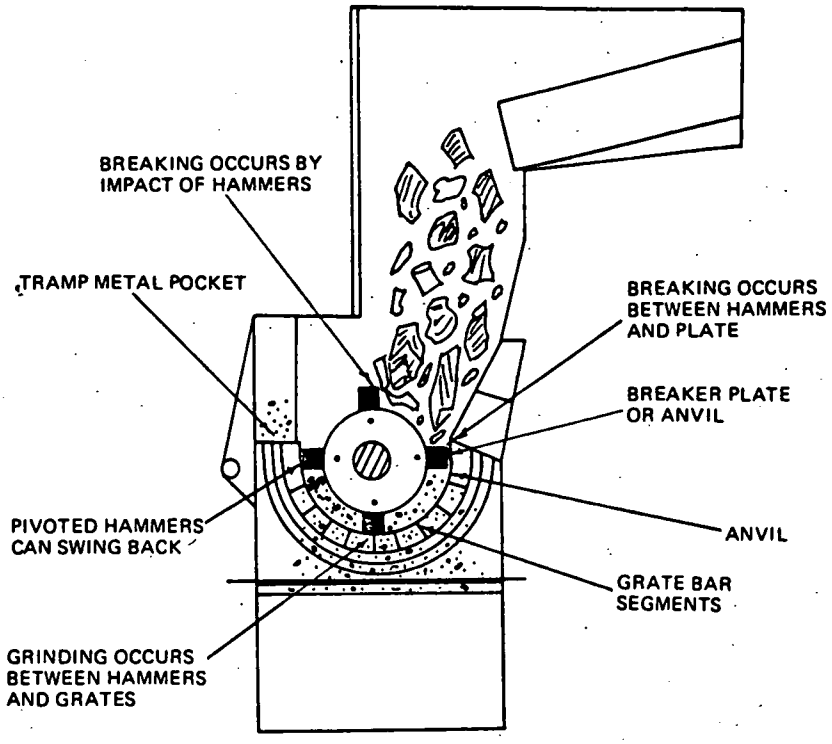

Figure B.1 Operation of a Typical Hammermill

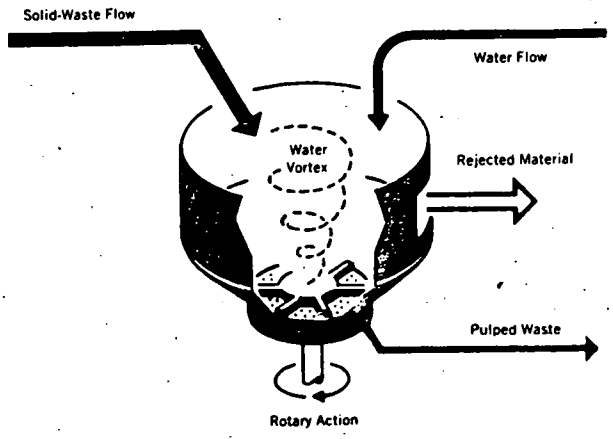

Figure B.2 Operation of a Typical Wet Pulper

(anvils) are positioned on the inner surfaces of a surrounding cylinder, so that the waste material is caught between the hammers and the anvils. Hammermills can be very efficient mechanisms for size reduction of municipal waste, but generally require considerable maintenace. Another disadvantage of hammermills and other dry size reduction systems is that the sparks generated by striking hammers have occasionally been a source of ignition for detonation of potentially explosive waste materials (such as a discarded can of gasoline).

An example of a wet size reduction system is a hydropulper (or wet pulper), which is used as part of resource recovery systems designed around recovery of the organic fraction of the waste as a paper fiber. A typical wet pulper, which is illustrated in Figure B.2 (Ref. 1), operates much like an oversized kitchen disposal unit. A large tank is filled with water which is swirled into a vortex using a spinning impeller located at the bottom of the tank. Waste poured into the tank is swept down the vortex and the organic fraction disintegrated into a fibrous slurry. The pulped material is discharged through holes in the bottom of the pulper, while inorganic materials such as cans or bottles are broken up by the sharp edges of the impeller and expelled tangentially. A pretreatment step is required to remove large objects (furniture, white goods, tires, etc.) prior to feeding the waste to the pulper.

Once a fairly uniformly sized feed is produced, there are a number of potential techniques for component separation. These include the following:

- particle size
- specific gravity (density)
- magnetism
- electrical conductivity
- color (optical techniques)
- chemical separation.

Separation by particle size is one of the simpler methods of materials separation. It has proven to be moderately effective for separation of municipal waste basically because the materials to be separated differ in terms of physical properties such as ductility, and size reduction equipment such as hammermills tend to leave different materials in different particle size ranges. Although suitable generally for only a course degree of separation, the equipment used is simple to construct and operate. The most common piece of equipment is the vibrating screen, which can be used in either a wet or dry mode of operation. Spiral classification units have also been used with less success.

Materials separation by density is very commonly used in the mineral industry, and various techniques based upon density differences have been devised for various types of recyclable materials. These techniques include flotation, dense media separators, vibrating tables, jigs, dry air stream classifiers, and inertial separators. In flotation techniques, waste particles are suspended in a liquid through which air is bubbled. Lighter waste particles are carried upward with the air bubbles and are collected using a weir overflow or by racking and screening techniques. Flotation techniques are useful for separating small glass particles from other material.

000281

Dense media techniques operate by suspending the waste material pieces in a liquid; heavier pieces tend to sink to the bottom while lighter materials tend to rise. Separation is controlled by varying the density of the liquids--e.g., by mixing water with solid particles such as magnetite or ferrosilicon. Density separation techniques are useful for separation of metals.

Vibrating tables can also be used. One type, known as a "stoner," is an inclined horizontal table which is shaken sideways, with a high speed in one direction and a slower speed in the reverse. Separation is accomplished via differences in the relative inertias of heavy and light particles. Another type, known as a "Wifley" table, is also an inclined horizontal table but has a series of small ridges running longitudinally along the table surface. Water flowing across the table carries lighter materials up and over the longitudinal ridges, while the heavier materials tend to collect against the ridges. A jig acts by producing a pulse of water up through a collection of waste particles. Particles tend to separate as the lighter particles are carried to higher levels in the water than the heavier particles.

Air classifiers are most commonly used for separating shredded paper from other materials. Waste is dropped into a chute and into a stream of air. The lighter paper products tend to fly out of the top of the chute while the heavier materials drop to the bottom of the chute.

Magnetic separators are very extensively used for recovery of ferrous metals. Large electromagnets are a common sight in scrap yards and are suitable for separating very large metallic pieces from raw refuse. Electromagnetic systems can also be easily adapted to separating small metallic pieces and fines once the refuse is reduced in size. A somewhat related technique is to use the differences in electrical conductivity of different materials by creating eddy currents within the particles. Electrical conductivity separation techniques are still largely experimental, however.

Sorting by optical techniques (color) has long been practiced in the mineral industry to color sort diamonds, and have also been used in the food and agriculture industries (e.g., to sort kernels of corn). Color sorting techniques appear to be particularly useful to sort colored glass from flint glass particles. However, the glass particles must be completely dry to achieve efficient operation. In addition the equipment required is sophisticated and expensive.

Chemical separation techniques are also possible. Such techniques can include combustion, in which a waste stream is incinerated and then the non-combustible items (e.g., metals) can be separated from the ash. It is useful as a technique for removing gross impurities from complex metallic shapes such as plastics from junked automobile bodies. Another example is the separation of tin cans from incinerator ash as discussed above for the Chicago Northwest Incinerator.

B.1.4 Materials Recovery Systems

As mentioned earlier, most materials recovery systems have been designed as an adjunct to a processing operation for the organic fraction of the input waste

stream. This is because the organic fraction of the input waste stream is generally a very sizable fraction of the input waste stream (greater than 50% by weight), and economics dictate that some form of recovery must be performed on this organic fraction. It is very unlikely that any resource recovery operation that recovers only the inorganic fraction, disposing of the organic fraction by conventional means such as landfill disposal or incineration, could recover sufficient income to pay for itself.

Most such organic materials processing operations involve energy recovery, and several typical energy recovery system designs are discussed in Section B.2. This section, however, will concentrate on some typical systems designed around materials recovery of the inorganic fraction. These systems include composting or recovery of paper fibers.

Composting. Composting is primarily a method of supplying humus to soil by converting organic material into a dessicated, non-odoriferous form through bacterial action. A product is produced which can be sold as a soil conditioner. It has proven to be considerably more popular in Europe than in the United States, and while a number of processes have been developed and demonstrated, most of the composting plants established in the United States over the past 20 years have closed. This is because the composting process is quite expensive when compared with other solid waste disposal methods, and there are a number of economical alternatives to use of compost as a soil conditioner. Thus, there is a lack of an adequate market for the process product.

One of the few successful composting facilities in the United States is the plant in Altoona, Pennsylvania, which has handled refuse disposal for the city continuously since 1960 at an average rate of about 25 tons per day. As of 1980, the Altoona plant was the only composting facility operating on a regular basis (Refs. 1, 2).

The Altoona plant uses a Fairfield-Hardy composting system similar to the system illustrated as Figure B.3. The feed is municipal refuse from which most of the inorganic fraction has been removed. A hammermill first shreds the waste, and then the shredded material is conveyed to a ferrous metal separator. The remaining material then undergoes a secondary size reduction process using a wet pulper, and is transferred in a moist form to a digester which is 37 ft. in diameter and 10 ft deep. The waste enters the digester on its perimeter and is mixed as it slowly moves to the discharge point at the center (an average retention time is 4 to 5 days). The digested compost is sent through a vibrating screen to remove plastics and is then dried and stored. Additional separation processes are then generally carried out (density separators, screens) to remove glass and other fine materials prior to packaging the compost for shipment. The Altoona plant operates 5 days per week and is operated by 5 men and a supervisor (Ref. 2).

Only about 32-34% of the 25 tons of solid waste processed per day is converted to compost. However, ferrous metals recovered as part of the process are sold as scrap. Recovery of glass as a glass product is prohibitively uneconomical, and so glass recovered from the operation is used as a road conditioner.

000283

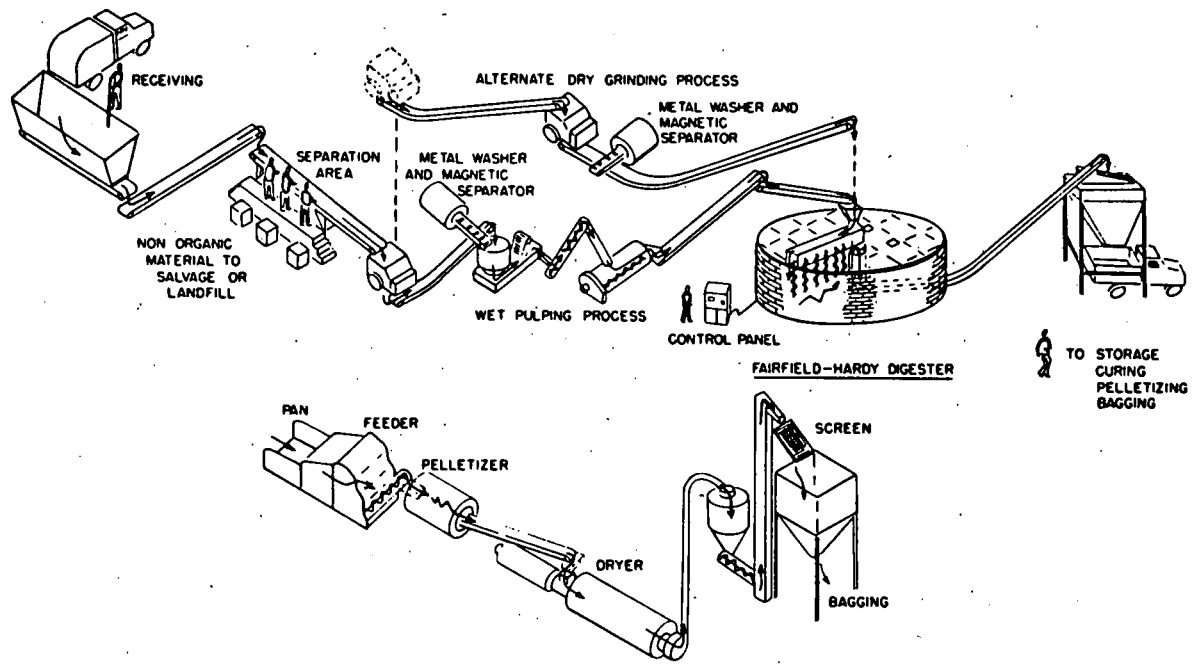

Figure B.3 Representative Schematic of Fairfield-Hardy Composting System

000284

6400

Rags, plastics, non-ferrous metals, and other unrecovered materials are disposed at a dump located across the street from the plant (Ref. 2).

Fiber Recovery. Recovery and reuse of paper fiber is another option, although to date no large-scale system has been developed which has been profitable. A facility located in Franklin, Ohio (discussed below) has demonstrated the concept by recovering and selling recovered fiber for a short time. This operation has been terminated, however, and the system is now advertised as a method for generating a refuse derived fuel. The fiber value of the recovered pulp is quite low, and so the market value of the product is also low. The energy value of the product is much higher. Thus, the most feasible method of paper fiber recovery is likely to continue to be source separation, and most resource recovery systems will probably continue to be designed around energy recovery processes.

The Franklin, Ohio facility was constructed through an EPA demonstration grant and utilizes a system developed by the Black-Clawson Company. The four major subsystems comprising the plant (Figure B.4) consist of pulping/separation, dewatering/incineration, fiber recovery, and glass recovery. The incineration process is used to dispose of sewage sluge from an adjacent wastewater treatment plant.

Municipal refuse delivered to the plant is first screened to remove large items and then sent to a wet pulper. Inorganic objects are ejected from the pulper and fed to a continuous belted magnetic separator, where ferrous materials are recovered. Non-magnetic materials are either returned to the pulper or landfilled. The slurry leaving the bottom of the pulper is pumped through a cyclone to remove grit and then directed to the fiber recovery system, or alternatively the dewatering/incinerating subsystem. The grit is dewatered and sent to the glass recovery system. Liquefied material pumped to the dewatering/incineration subsystem is first thickened and then mixed with sewage sluge. The sluge is then further dewatered using a cone press and fed to a fluidized-bed incinerator. Combustion products are processed through a venturi scrubber and then released to the atmosphere. Scrubber liquid effluents are processed in the waste water treatment plant.

The slurry sent to the fiber recovery subsystem is diluted with additional water and then screened to remove fine particles. The light fraction is then thickened, using a barrel thickener, dewatered using a cone press, and then stored for sale to an asphalt tile manufacturer. About 20 tons of paper fiber can be recovered for every 100 tons of solid waste processed.

The glass recovery system accepts the heavy fraction (grit) removed by the cyclone (following pulping). A washing and screening step first removes particles smaller than a quarter inch, and the oversize fraction passed to a drum magnet to separate ferrous materials. A heavy media separator removes light organics from the oversize fraction and the heavier materials are jigged to removed pieces of aluminum. The resulting glass-rich stream is then dewatered, dried, and sent through an electrostatic separator to remove any remaining electrically conducting scrap. An opacity sorter then removes the glass particles which are separated into flint and colored cullet using a color sorter.

000285

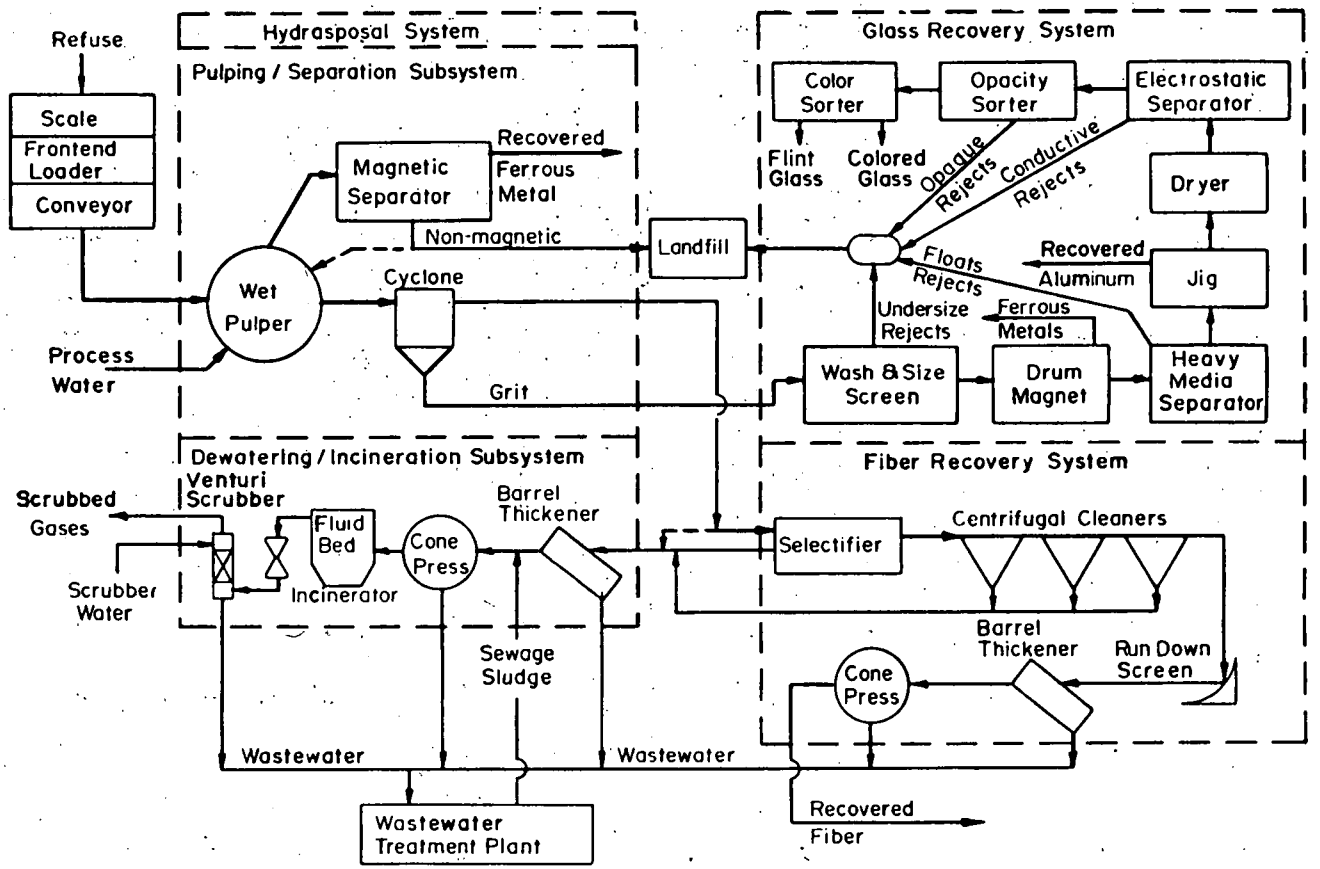

Figure B.4 Diagram of Franklin, Ohio Fiber Recovery System

000286

6400

One of the interesting features of the Franklin plant is its complementary arrangement with the adjacent waste water treatment plant. The solid waste plant incinerates sewage sludge from the sewage treatment plant, while the sewage treatment plant accepts and treats process waste water from the solid waste plant. Despite this advantageous arrangement, the facility has not demonstrated a profit and has instead incurred an operating cost of about $4.40 per ton of waste (Ref. 1). One problem is that although the plant capacity is 150 tons of waste per day, the plant was under utilized and only averaged a throughput of about 35 tons/day (Ref. 1). Another minor problem is that despite state-of-the-art separation techniques for glass recovery, the resulting glass product was still of less than top quality (Ref. 4). It is theorized, however, that a wet pulping system on a 500-1000 ton/day scale could be economical, and possibly even profitable, if the separated organic stream is dewatered and sold as a fuel rather than a fiber product (Ref. 1).

B.2 ENERGY RECOVERY

This section discusses a number of resource recovery systems based around recovery of the organic fraction of the waste as energy. The emphasis is on systems designed from the start for resource recovery, rather than possible modifications to existing waste treatment and disposal facilities not originally designed for resource recovery. An example of the latter case is a refractory walled municipal incinerator which adds a boiler to recover a portion of the otherwise wasted heat energy.

Four example energy recovery systems are discussed below:

(1) Mass burning of unprocessed solid waste heat recovery furnaces (waterwall incinerators);
(2) Mass burning of unprocessed solid waste in small, modular, starved-air, two-chamber incinerators (modular combustion units, or MCU's);
(3) Semi-suspension of processed solid waste in dedicated burners or as a refuse-derived fuel (RDF) as a supplement to a fossil fuel such as coal; and
(4) Conversion of solid waste to other fuel forms through pyrolysis.

This discussion is followed by an overview section.

Waterwall incineration. The great majority of municipal waste incinerators in operation in the United States are refractory wall units for which no heat recovery is attempted. A variation in incinerator design which has attracted some interest involves lining the furnace walls with a series of closely spaced metal tubes through which water is circulated. These designs are termed waterwall furnaces and heat energy transferred to the circulating water may be recovered for electrical energy, process heat or other purposes. Waterwall incinerators were introduced in Europe and developed by two principal firms--Josef Martin Feuerungsbau GmbH and Von Roll Ltd.--but only recently introduced to this country. As of 1981, there were ten mass burning waterwall incinerators in operation in the United States plus two more in Canada. These units are listed in Table B-7 and represent a total U.S. plant design capacity of 6128 tons/day (2200 tons/day in Canada) (Ref. 8).

000287

Table B-7. Summary of Operational U.S. and Canadian Mass Burning Waterwall Systems

Location	Placed in Service	Design Capacity (TPD)	Current Capacity (TPD)	Number of Lines	Total Tons Processed	Availability (%)	Steam Output (lb/hr)	Cost (1981) Capital ($ millions)	Cost (1981) Unit ($/TPD)*
Saugus, MA	November 1975	1200	1050	2	2,000,000	77	370,000	88.5	73,750
Chicago, IL	September 1970	1600	1200	4	3,700,000	75	330,000	57.0	35,635
Harrisburg, PA	October 1972 (plus 14 TPD sludge)	720	580	2	1,000,000	85	130,000	17.6	24,437
Nashville, TN	August 1974	720	530	2	850,000	50	100,000 (or 14 tons refrig.)	41.6	57,735
Oceanside, NY	June 1974	750	450	3	700,000	50	60,000 (plus 2480 kw electricity)	24.8	33,060
Braintreee, MA	May 1971	384	250	2	485,000	85	60,000	6.6	17,135
Navy Public Works Center Norfolk, VA	May 1967	180	140	2	575,000	50	45,000	6.2	34,532
Norfolk Naval Shipyard Portsmouth, VA	August 1977	160	50	2	50,000	40	25,000	6.7	42,000
Hampton, VA (NSA, USAF)	September 1980	200	240	2	71,300	85	62,000	14.4	71,760
Montreal, Canada	September 1970	1200	975	4	3,100,000	71	220,000	35.5	29,556
Quebec City, Quebec, Canada	June 1974 June 1975	1000	650	4	1,458,000	75	130,000	59.4	59,400
Gallatin, TN	1982	200	--	2	--	--	54,000	9.4	47,000

*TPD: Tons/Day

000288

6400

One example waterwall incinerator is the unit located in Saugus, Massachusetts and operated by the Refuse Energy Systems Company (RESCO). The Saugus facility is the only operating facility in the United States based upon Von Roll technology and is illustrated schematically in Figure B.5. The Saugus plant has an average refuse capacity of 1500 tons/day with a 1725 tons/day peak capacity, but has been operating at an average of only about 1050 tons of refuse per day. Superheated steam is produced during operation, and this steam is delivered to the General Electric Company at 625 psig and 825°F at an average rate of 285,000 lb/hr and a peak delivery capability of 350,000 lb/hr (Ref. 1).

Refuse delivered to the plant is first dumped into a large storage pit having a holding capacity of 6700 tons. The refuse is then transferred to furnace hoppers using a crane. Refuse enters the furnance through a chute, dropping onto a reciprocating grate system consisting of three grates. After drying on the first grate, the refuse tumbles down to the middle grate where actual combustion takes place. Depending upon the moisture content of the refuse, combustion can be extended over the third grate if necessary. The reciprocating action of the grates can be varied, which in turn varies the speed that the refuse is transferred through the furnace and thus enhancing combustion efficiency. Auxiliary fuel is generally not needed (Ref. 1).

Steam is generated in the water walls by furnace radiation as well as the hot combustion gases, which are in the range of 650°F. Combustion gases exiting the furnance are first passed through a pair of electrostatic precipitators and are then discharged to the atmosphere through concrete stacks. The operating emission limit at the plant is 0.05 grams per standard ft^3 (Ref. 1)

The residue dropping off of the last grate is combined with flyash collected by the electrostatic precipitators, water-quenched, and conveyed to a 8-ft diameter rotating trommel screen. Smaller materials passing through the 2-in holes in the trommel screen are collected on a vibrating conveyer and conveyed past a drum magnet to remove ferrous metal pieces. The ferrous metal recovered by the magnet is sold as low grade scrap as are bulky metal items overflowing the trommel. The residue not removed by the magnet is a glassy aggregate which is landfilled (Ref. 1).

The plant operates 24 hours/day and 7 days/week, although refuse is delivered to the plant for only 5 days/week (Ref. 1). About every 8 weeks one of the two furnaces is shutdown for approximately 3 to 4 days, and a 2-week outage is scheduled for each furnace once a year (Ref. 9). Approximately 55 employees work at the facility (Ref. 8).

Modular Combustion Units (MCU's). MCU's are typically small two-chamber designs, and have been used for many years in the past for volume reduction--generally in large retail or commerical complexes, apartment houses, institutions, and industrial sites (Ref. 10). Something like 20 different companies manufacture the units, and the units range in size from 1 to 20 tons per day. MUC's can be combined, however, in modular fashion to achieve capacities of 20 to 100 tons/day. Since they are shop fabricated, construction is quick and simple. Their relatively low capital and operating costs make them feasible in some instances for communities as small as 10,000 to 15,000 people (Ref. 1).

000289

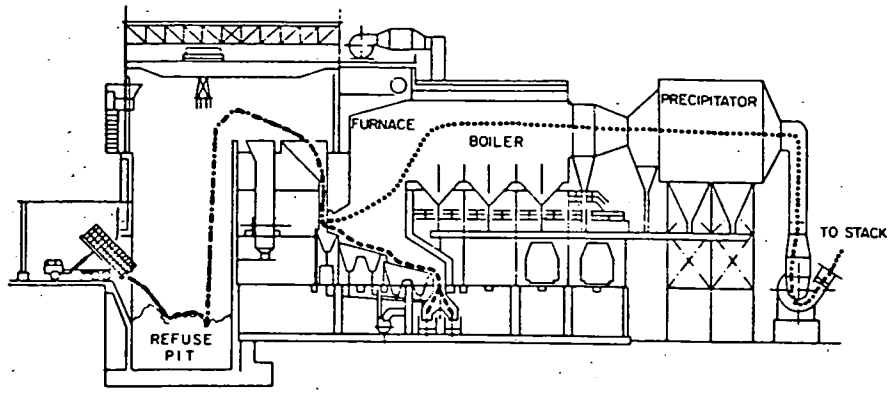

Figure B.5 Saugus, Massachusetts Waterwall Incinerator

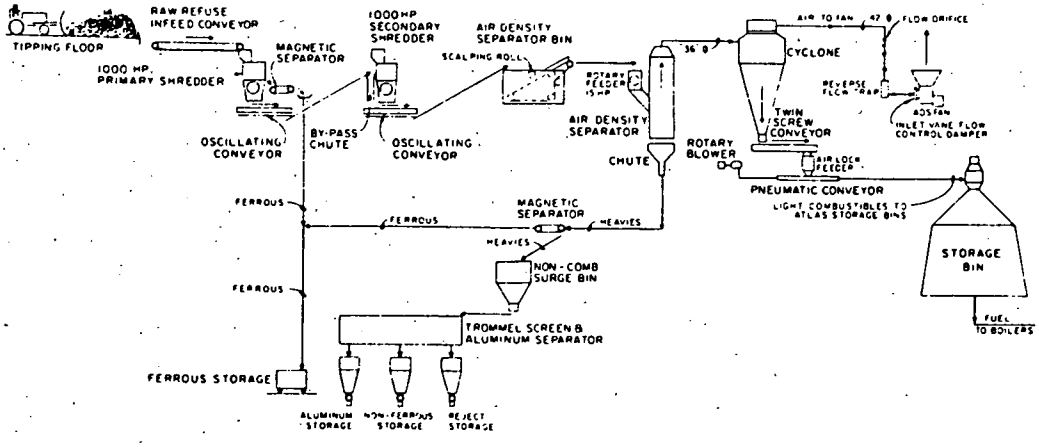

Figure B.6 Schematic of Ames, Iowa Plant

Another advantage is reduced air pollution and smoke. The units are designed to limit the combustion air supply, resulting in high flue gas temperatures. High temperature operation also minimizes the need for auxiliary fuel powering after burner devices.

Addition of heat-recovery systems in the units has only been incorporated during the past few years, and systems are available to recover steam, hot water, or heated air. There are currently about 20 such heat-recovery units in operation, ranging in size from 15 to 100 metric tons/day and most of these are in industrial sites. At least one industrial site burns municipal waste 1 day/week and industrial waste the remaining time.

Wang, et al. in Reference 1 describes the operation of a typical MCU:

> Refuse is charged repeatedly in batches, and after 10-12 hours of charging, the unit is allowed to burn down. Residue is raked out after the burn-down (8-12 hours) and the process is repeated. The starved air units consist of a cylindrical or elliptical cross-section primary chamber incorporating underfire air slots in the hearth-type floor. Overfire air is also supplied. All combustion air is provided by forced draft fans. In many such incinerators, the proportion of underfire to overfire air is regulated from a temperature sensor (thermocouple) in the exhaust flue (higher exit temperatures increase overfire air and decrease underfire air).
>
> Most units incorporate a gas- or oil-fired afterburner that is energized whenever the exit gas temperature falls below the set point temperature (usually 650-750°C). The afterburner is either mounted in a separate, secondary combustion chamber or in a refractory-lined stack.
>
> Starved air incinerators are available in capacities from 100 to 1000 kg/hour and, if properly operated and maintained, can meet most federal, state, and local air pollution codes when fed with typical office and plant trash (principally paper, cardboard, and wood).
>
> The modular combustion units can be equipped with a boiler (usually of the firetube type) for the recovery of heat. The larger units can also be equipped with automatic feed and residue removal systems thus increasing the daily throughput and somewhat stabilizing the steam generation rate.

The major drawback of this system in relationship to resource recovery is the relatively small design capabilities as compared to the mass burning incinerator system.

Refuse-derived fuel (RDF). This option involves converting the organic fraction of the waste into a fuel that can be burned in existing fossil fuel combustors. Applications can include either burning the RDF in a dedicated semi-suspension furnace or burning the RDF as a supplement to coal in a suspension-fired burner.

Preparation of a refuse derived fuel requires processing the input waste feed to remove the inorganic fraction and to size-reducing the organic fraction for

000291

ease of combustion. This is often accomplished by shredding and classification, although as discussed earlier the concept of wet pulping is an additional processing option. The combustible material produced by the processing operations can be specified fairly narrowly in terms of physical properties, heat of combustion, and percentages of water and ash (Ref. 1). A typical RDF composition is listed below (Ref. 1):

Typical RDF Composition by Waste Component

Component	Wt %
Paper	55.0
Food waste	16.0
Yard waste	13.7
Glass, ceramics	2.7
Wood	2.6
Textiles	2.5
Leather and rubber	1.8
Miscellaneous	3.9

The first commercial refuse-derived fuel facility in the United States was constructed in Ames, Iowa. This plant produces RDF which is burned in a city-owned power plant. The plant includes a 33 MW suspension fired boiler and two 20 MW spreader-stoker (equipped with grates) boilers. A schematic of the plant is illustrated in Figure B.6 (Ref. 1).

Wang, et al. provides in Reference 1 a description of the operation of the Ames RDF system:

> The plant has a maximum refuse-handling capacity of 50 tons/hour and typically operates at about 30 tons for 8-12 hours per day depending on the refuse supply. It accepts all general household and commercial refuse delivered by both commercial and private haulers.
>
> The wastes are moved from the tipping floor into the processing equipment by a front-end loader which pushes the material onto a variable speed conveyor. The conveyor transfers the waste to the first-stage shredder where it is reduced to an average 7-in size. This shredder has 9 x 9 in grate openings and 48 hammers that weigh approximately 150 pounds each. The shredder rotates at 690 rpm and is driven by a 1000 hp motor.
>
> Upon leaving the shredder, the fragmented waste stream is subjected to a magnetic separator whereby approximately 90% or more of the ferrous metal is extracted. The ferrous extracts are deposited on a conveyor belt and transported to storage for subsequent transport and sale.
>
> The remainder of the material, less the larger ferrous materials, moves to a second-stage shredder which reduces the material to an average 2 in size. This shredder has a drive unit identical to the first-stage shredder, but has grate openings that are 3 in x 5 in and hammers that weigh only 45 pounds.

The finely shredded material next passes to an air classifier where it is subjected to an air stream of approximately 250,000 ft^3/min in a baffled chamber. Here the lighter particles are carried upward into the high velocity stream whereas the heavier particles fall downward and out of the chamber, thus providing the separation of "heavies" from "lights."

The light material stream leaving the top of the classifier enters a cylone, is separated from the air stream, and drops to a screw feeder RDF to be fed to a pneumatic pipeline. The RDF is pneumatically delivered to a conical-type storage bin located about 600 ft away at the power plant facility. The bin is 84 ft in diameter and provides storage of approximately 550 tons of RDF. The RDF drops through grates in the bin floor to four separate drag conveyor lines. These conveyors meter the RDF into four separate airlock feeders which inject it into four separate pneumatic conveying lines that feed directly into the combustion zones of the power plant boilers about 300 ft away.

The heavy materials which drop out of the air classifier are conveyed to a magnetic separator where more ferrous materials are separated and transferred to storage. The remainder of the materials are transported to the aluminum recovery portion of the plant. First, a 48-in diameter trommel screen separates a minus 5/8-in fraction, which is mostly glass and grit. The larger materials leaving the trommel are subjected to an eddy current separator where mostly aluminum is recovered, and the residual material is transported to the rejects storage for subsequent delivery to the landfill.

The aluminum recovery system has produced minimal amounts of product due to operating problems and the fact that the refuse fed to the system contains very little aluminum.

Ferrous metals are recovered at the rate of 10-12 tons/day, which amounts to 5-6% of the incoming refuse. These are sold at 47-1/2% of the Chicago bundle price to Vulcan Materials Company in Gary, Indiana.

The refuse-derived fuel is by far the largest recycled fraction, averaging about 85% of the incoming refuse. This fraction is mostly paper, plastics, and wood, and has an average heat content of 5200 Btu/lb. The RDF is used primarily in the suspension-fired boiler, where it is burned with pulverized coal and provides between 10 and 20% of the total fuel requirements of the boiler. The spreader-stoker boilers can accept the RDF as supplementary fuel whenever the suspension-fired boiler is out of service for maintenance and inspection. The total reject materials sent to the landfill have averaged about 8.5% of the incoming refuse.

Pyrolysis. Pyrolysis of municipal solid waste has largely been an American concept, and was developed as a means to convert solid waste into a marketable fuel. Pyrolysis involves the destructive distillation of the organic fraction

000293

of solid waste, occurring when organic material is heated in the effective absence of oxygen. The process is an endothermic (heat absorbing) reaction rather than exothermic.

The various pyrolytic processes that have been developed operate by either recovering liberated heat and/or by recovering a gaseous or liquid form. All processes reduce the input waste feed to three forms--gases, liquids, and solids. Gases primarily include hydrogen, methane, carbon monoxide, and carbon dioxide; liquids primarily include water and organic chemicals such as acetic acid, methanol, and benzene; and solids consist principally of a carbonaceous char. The form and characteristics of the derived fuel varies for each of the various pyrolytic processes and are functions of the particle size of the waste feed, the presence of calalysts, and the reaction time, temperature, and pressure in the pyrolysis reactor. To maximize gas production, reactor temperatures are held in the range of 800 to 1,600°C (1,400-3,000°F), while to maximize oil production, temperatures are on the order of 500°C (900°F). Pressures range from 1 to 70 atmospheres (Ref. 10).

The carbon char residue is biologically inactive and may be safely disposed in sanitary landfills following removal from the reactor. Conversely, the residue may be potentially used as an aggregate for construction and paving. This is especially feasible if the pyrolysis temperature is maintained high enough to melt the residue (including ash and other non-combustibles such as cans and glass) into a slag which can be removed in a molten state and quenched to form a glassy aggregate (Ref. 10).

There are currently four pyrolysis systems being tested and developed on a large-scale basis, although no commercially operated systems are in operation. These four large-scale systems are located in Baltimore, Maryland, San Diego, California, South Charleston, West Virginia, and Erie County, New York (Ref. 10). One of these systems--the Baltimore, Maryland operation is discussed below. This 1,000 tons/day unit is based on the Landgard process, and was originally developed by Monsanto Enviro-Chem Systems, Inc., although the City of Baltimore currently operates the plant.

Wang, et al. describes the concept of the Baltimore pyrolytic system in Reference 1:

> Processing starts on a receiving floor where bulldozers push the refuse onto two conveyors that lead to two separate shredders, each 73-in in diameter and 99 in long, driven by 900 hp motors.
>
> The shredded refuse is stored in a conical bin with a 2000 ton capacity. A drag-line bucket is used to undercut the refuse pile and move it out of the bottom of the bin to a kiln feed conveyor. The conveyor discharges to two ram feeders, which extrude the refuse through stainless teel tubes into the pyrolysis kiln. As the refuse tumbles down the inclined kiln, it is dried, volatilized, and partially combusted before being discharged at the lower end into a water quench bath.

The residue from the quench bath is removed by a drag conveyor and transferred to a flotation unit where the light char and ash float and are conveyed to dewatering operating prior to storage of the char. The heavier materials (metals and glass) sink, and are conveyed to a belt magnet where the ferrous metals are separated for sale as scrap, and the glassy aggregate is transferred to a storage pile for use in asphalt road construction.

The offgases resulting from pyrolysis are partially combusted in the kiln, and provide the heat necessary to sustain the pyrolysis reactions at the temperature of 1200°F for the offgases, and 2000°F for the solids.

The gaseous pyrolysis products exit the kiln at the feed end and proceed through a crossover duct where air is added to complete the combustion of the gases and any carbon and soot entrained in the gas stream. The gases enter an afterburner tangentially, and the resulting cyclonic flow pattern causes molten flyash particles to be thrown to the vessel sidewalls from where they flow to a slag tap hole in the bottom of the afterburner.

Quench air is added to the afterburner exit to cool them below the ash fusion temperature. The gases then flow through two parallel waste per hr, heat boiler/economizer assemblies that generate about 200,000 lb of steam per hour at 100-260 psig, for sale to a nearby utility.

Finally, the flue gases are drawn through a wet gas scrubber by an induced draft fan (the fan produces sufficient suction to draw the gases through the entire system), and are discharged through a humidifier to the atmosphere.

The Baltimore plant has hindered the construction of pyrolytic systems due to numerous equipment malfunctions and shutdowns.

Overview. Over the past 10 to 20 years there have been considerable work done and processes developed for recovery of energy from municipal waste. One of the most popular energy recovery systems--and in fact considered by many the system of choice--is the mass burning waterwall incinerator. A product--steam--is generated which can be sold, air pollution standards are more easily met, and little or no pretreatment (size reduction) of the waste is necessary prior to combustion. Operation of the waterwall incinerator is similar to operation of the standard refractory walled furnace which has been in use for years. Given the waterwall furnace's long development time in Europe and relatively few waste processing steps, there is a smaller probability of a breakdown than with some of the other resource recovery systems.

One of the disadvantages of the waterwall furnaces that have operated in the United States is that maintenance of the ash handling and grate systems has proven to be somewhat labor intensive (Refs. 8, 12). These disadvantages are being remedied, however. Maintenance of the ash handling system can be reduced by utilization of wet sump drag conveyors and improved ash pit designs. This

000295

will also reduce the dust associated with the ash. The grate problem appears to be one of under design; while U.S. grates have a life of typically less than a year, European grates have demonstrated lives of 7 to 8 years. All grate systems, however, will require periodic maintenance (Ref. 8).

RDF systems are not as popular as they once were. One of the reasons is that the RDF fuel increases the ash content of the residue, which results in a need for increased attention to dust control during residue removal. More importantly, much of the generated ash passes out of the furnace as particulates, which increases the potential for air pollution. This means that RDF is limited to facilities having adequate pollution control equipment, and care must be taken to not overload the plant air treatment system. In practice, RDF is limited to coal-fired plants rather than plants designed for gas or oil combustion.

Most RDF systems currently in development use mechanical shredders such as hammermills, and maintenance of these shredders has been proven to be rather labor intensive. In addition, with dry shredding systems exist the potential for explosions. This could be caused by a discarded can of gasoline being ignited by the sparks generated by the flailing hammers. Another problem is that RDF is often dusty and if stored in silos as it frequently is, the dust level could lead to explosions.

MCU's have proven to be popular and useful. Their main disadvantage is that their size is not condusive to economics of scale. That is, the throughput of waste is generally not great enough to justify recovery of the inorganic fraction. MCU's are primarily used in industry and in institutions such as hospitals, and are dedicated for combustion of waste generated by these organizations.

A number of problems have been observed with the pyrolytic systems under development. Several design changes have been required at both the Baltimore, Maryland and San Diego, California facilities. Many of these problems have been either eliminated or reduced. However, it is apparent that pyrolysis is a system still under development, and additional time will probably be required before the system is accepted for regular commercial use.

B.3 MUNICIPAL RESOURCE RECOVERY FACILITIES

In 1979, there were 29 resource recovery facilities in operation. Seven were mass burning waterwall incinerators, eight produced or burned refuse-derived fuel, six were modular combustion units, and there were eight others. In the construction stage there were 14 facilities consisting of two waterwall incinerators, five refuse-derived fuel facilities, two modular combustion units, and five others. In the advanced planning stage there were 22 facilities consisting of eight waterwall incinerators, eight refuse-driven fuel facilities, three modular combustion units, and three others (Ref. 11).

Table B-8 gives an overall summary of resource recovery systems in the United States for 1979. This table also lists the products produced by the resource recovery facilities and gives totals for the number of facilities selling ferrous metals, aluminum, and glass.

Table B-8. Municipal Resource Recovery Systems: 1979

Type	Operational*				Under Construction*				In Advanced Planning*			
	RDF	MCU	WWC	Other	RDF	MCU	WWC	Other	RDF	MCU	WWC	Other
Number	8	6	7	8	5	2	2	5	8	3	8	3
Average Capacity (tons/day)	858	60	782	--	2,067	75	600	--	1,713	205	1,284	--
Capacity Range (ton/day)	160-2000	19-100	160-1600	--	750-3500	50-100	200-1000	--	300-2400	150-240	150-3000	--
Products												
Steam	0	6	6	2	1	2	2	3	2	3	5	0
RDF	7	0	0	0	5	0	0	0	4	0	0	0
Electricity	1	0	0	0	0	1	0	0	4	0	4	1
Ferrous Metals	7	0	2**	1	5	0	1	2	7	1	4	0
Aluminum	3	0	0	1	4	0	0	1	0	0	0	0
Glass	2	0	0	1	3	0	0	1	0	0	0	0

002297

Table B-8. (Continued)

Type	Operational*				Underconstruction*				In Advanced Planning*			
	RDF	MCU	WWC	Other	RDF	MCU	WWC	Other	RDF	MCU	WWC	Other
Methane	0	0	0	4	0	0	0	2	0	0	0	1
Non-Iron	0	0	0	0	0	0	0	0	0	0	1	0
Humus	0	0	0	1	0	0	0	1	0	0	0	0

(In 1979) Number of facilities selling ferrous metals 7
(In 1979) Number of facilities selling aluminum 3
(In 1979) Number of facilities selling glass 1

RDF = Refuse-derived fuel
MCU = Modular combustion unit
WWC = Mass burning waterwall incinerator
Other = Methane, pyrolysis, co-disposal, and composting

* Operating - Plants that are currently accepting solid waste and processing it; plants that have been accepting waste but are temporarily shut down to repair, modify, or expand, or to work out legal, financial, or marketing problems; and plants in the shakedown phase. In addition, these facilities must be doing more than shredding, incineration, ferrous metals recovery, and landfilling; they must have the capability for additional materials or energy recovery. This category does not include plants closed permanently.

Under construction - Progress from ground breaking through, but not including, the startup or shakedown phase. Construction at these facilities may be halted, but a date for resuming work must be known.

Advanced planning - To qualify for this category, one of four conditions must be met: A Request for Proposals (RFP) must have been issued for design and construction of the project; construction funding must have been made available; final engineering design must be under way, or, in the case of privately initiated projects, where an RFP will not be a part of the procurement process, either a preliminary design must be complete and must have been accepted by the community involved as a basis for making a go/no-go decision, or a full service proposal must have been formally offered for disposal services over a multi-year contract period for a predetermined price.

** Material for both being recovered but not sold.

000298

6400

REFERENCES

(1) Wang, L. K. and N. C. Pereira (eds.), "Handbook of Environmental Engineering, Volume 2, Solid Waste Processing and Resource Recovery," The Humana Press, Clifton, New Jersey, 1980.

(2) Pavoni, J. L., J. E. Heer, Jr., and D. J. Hagerty, "Handbook of Solid Waste Disposal: Material and Energy Recovery," Van Nostrand Reinhold, New York, 1975.

(3) Mantell, C. C., "Solid Wastes: Origin, Collection, Processing, and Disposal," John Wiley and Sons, 1975.

(4) Morey, B. and A. Gupta, "A Review of Resource Recovery Technology," Energy and Resource Recovery from Industrial and Municipal Solid Wastes, AIChE Symposium Series No. 162, Volume 73, 1977.

(5) Wilson, D. G., "Review of Advanced Solid-Waste Processing Technology," Energy and Resource Recovery from Industrial and Municipal Solid Wastes, AIChE Symposium Series No. 162, Volume 73, 1977.

(6) Lowe, R. A., et al., "Energy Conservation Through Improved Solid Waste Management," SW-125, U.S. Environmental Protection Agency, 1974.

(7) U.S. Department of Commerce, Bureau of the Census, "Current Industrial Reports: Glass Containers, Summary for 1981," M32G(81)-13, August 1982.

(8) Systech Corporation, "An Overview of U.S. and Canadian Experience with European Mass Burning Waterwall Incinerator Systems," Systech Corporation for U.S. Environmental Protection Agency, 1981.

(9) Personnel communication from K. Batton, Refuse Energy Systems Company Resource Recovery Facility, Saugus, Massachusetts, to J. Furfaro, Dames & Moore, February 16, 1983.

(10) Levy, S. J., D. B. Sussman, and D. Ruby, "Recovering Energy from Municipal Solid Waste: A Review of Activity in the United States," U.S. Environmental Protection Agency, May 1980.

(11) Max, B. J., "Resource Recovery and Waste Reduction Activities, A Nationwide Survey," SW-432a, U.S. Environmental Protection Agency, 1979.

(12) Personal communication from R. Baumgartner, Von Roll Inc., Cranford, N.J., to J. Furfaro, Dames & Moore, February 16 & 18, 1983.

APPENDIX C

REFERENCE TREATMENT AND DISPOSAL FACILITIES

APPENDIX C

REFERENCE TREATMENT AND DISPOSAL FACILITIES

TABLE OF CONTENTS

Section		Page
C.1	INTRODUCTION	C-1
C.2	ON-SITE TREATMENT AND DISPOSAL	C-2
	C.2.1 Reference Pathological Incinerator	C-2
	C.2.2 Reference On-Site Disposal Area	C-6
C.3	MUNICIPAL SOLID WASTE TREATMENT AND DISPOSAL	C-14
	C.3.1 Solid Waste Incineration	C-15
	C.3.1.1 Background on Municipal Waste Incineration	C-15
	C.3.1.2 Reference Municipal Incinerator	C-27
	C.3.1.3 Waste Size Reduction, Separations, and Materials Recovery	C-33
	C.3.2 Solid Waste Disposal	C-39
	C.3.2.1 Overview of Operations	C-40
	C.3.2.2 Personnel Requirements	C-44
	C.3.2.3 Assumptions for Personnel Exposures	C-47
C.4	OFF-SITE TREATMENT AND DISPOSAL OF HAZARDOUS WASTE	C-51
	C.4.1 Hazardous Waste Incineration	C-52
	C.4.2 Hazardous Waste Disposal	C-61
C.5	REFERENCE SITES AND ENVIRONMENTAL CHARACTERISTICS	C-71
	C.5.1 Environmental Properties	C-72
	C.5.2 Derived Parameters	C-73
	C.5.2.1 Independent Derived Environmental Parameters	C-78
	C.5.2.2 Dependent Derived Environmental Parameters	C-83
	C.5.2.3 User Supplied and Override Environmental Parameters	C-87
REFERENCES		C-90

LIST OF TABLES

Table		Page
C-1	Typical Volume Reduction Factors (VRF) for Pathological Incinerators	C-5
C-2	On-Site Treatment and Disposal Facility Parameters	C-13
C-3	Particulate Emission Factors by Incinerator Category	C-23
C-4	Measured Particulate Emission Factors for Seven Municipal Incinerators	C-25
C-5	Composition of Waste Input to Reference Incinerator	C-30
C-6	Personnel Requirements for Some Modern Energy and Materials Recovery Systems	C-37
C-7	Commercial Hazardous Waste Incineration Industry as of 1980	C-52
C-8	Particulate Emissions from Test Burns at Two Rotary Kilns	C-57
C-9	Summary of Reference Treatment and Disposal Facility Site Environmental Properties	C-74
C-10	Water Balance Analysis Data and Assumptions	C-75
C-11	Detailed Water Balance Calculations	C-76
C-12	Base Population Distributions for Reference Sites	C-78
C-13	Independent Derived Environmental Parameters	C-80
C-14	Summary of Population Density, Data Base, and Demographic Model	C-83
C-15	Dependent Derived Environmental Parameters	C-85

LIST OF FIGURES

Figure		Page
C.1	Multiple-Chamber Incinerator With a Pathological Waste Retort	C-3
C.2	Summary of Information Needed in an Application for Burial of Radioactive Waste in Soil by Individual Licensees	C-8
C.3	Cross-Section Through a Typical Municipal Incinerator	C-17
C.4	Illustration of a Typical Refractory Walled Rectangular Furnace	C-19
C.5	Trench Method of Sanitary Landfill	C-41
C.6	Area Method of Sanitary Landfill	C-41
C.7	Ramp Method of Sanitary Landfill	C-41
C.8	Cross-Section of Reference Sanitary Landfill	C-43
C.9	Operation of a Typical Rotary Kiln Incinerator	C-55
C.10	Layout of Reference Hazardous Waste Facility	C-64
C.11	Cross-Section of a Typical Hazardous Waste Disposal Cell	C-65
C.12	Map of Thornthwaite's Precipitation-Evaporation Index Values for State Climatic Divisions	C-77

APPENDIX C. Reference Treatment and Disposal Facilities

C.1 INTRODUCTION

This appendix presents background information and assumptions regarding the reference facilities assumed for treatment and/or disposal of de minimis waste. Also presented are the reference environmental characteristics assumed for the treatment and disposal facilities.

Section C.2 presents a background and assumptions for on-site treatment and disposal of waste by a licensee. The treatment facility is assumed to be a small incinerator of the type commonly used by universities, hospitals, and research institutions to burn pathological, biological and other waste materials. Disposal is assumed to consist of burial in soil.

Section C.3 covers treatment and disposal of waste as a municipal solid waste. That is, the de minimis waste in this case is assumed to not contain toxic, reactive, or other materials which would make it a hazardous waste as defined by the Environmental Protection Agency (EPA) under the Resource Recovery and Conservation Act (RCRA). The reference treatment facility is assumed to consist of a 500 tons/day refractory-walled municipal incinerator. The basic incinerator is assumed to combust the waste without any significant waste pretreatment steps and with no recovery of recyclable materials. Optional "sorting" modules consisting of waste pretreatment (size reduction and removal of non-combustible materials) and resource recovery (recycle of scrap metal and glass) are also addressed. These optional modules are characterized in a conservative manner as discussed in the section.

Disposal of waste is assumed to be by landfilling, and two levels of landfill adequacy are characterized. These include a sanitary landfill and an open dump. Open burning of waste is practiced at the open dump. Both operational and long-term (e.g., ground water migration) impacts differ for the two reference landfills.

Section C.4 addresses treatment and disposal of de minimis waste as a hazardous waste as defined under RCRA. Treatment is assumed to consist of incineration while disposal is assumed to consist of a secure landfill. The emphasis in this case is on treatment and disposal facilities which perform such functions as a commercial enterprise, and are licensed to do so by EPA or a state with licensing authority. The commercial hazardous waste incinerator is assumed to consist of a 100 tons/day rotary kiln, which is typical of the type of large-scale hazardous waste incinerators currently in commercial service. No distinction is assumed for a "well-operated" or "poorly operated" hazardous waste landfill in terms of operational impacts, although the user of the code may assume alternate levels of long-term environmental impacts.

Section C.5 addresses the different environmental characteristics which may be assumed for any of the reference treatment and disposal facilities discussed

in the previous sections. Three different sets of environmental characteristics are assumed: (1) a site located in a humid area and having a moderate population density plus soils of moderate permeability, (2) a site located in a humid area and having a high population density plus soils of low permeability, and (3) a site located in an arid environment and having a low population density plus soils of high permeability. If desired, environmental characteristics specific to a particular site may also be assumed.

C.2 ON-SITE TREATMENT AND DISPOSAL

This chapter addresses the assumptions used for estimating potential radiological impacts to individuals and populations due to on-site treatment and/or disposal of de minimis waste by a licensee. The assumed treatment method consists of incineration in a small incinerator commonly used at universities, hospitals, and research institutes to combust pathologic materials. On-site disposal involves burial in soil.

C.2.1 Reference Pathological Incinerator

Over the last several years there has been considerable interest in developing and marketing systems by which licensees may volume reduce low-level waste streams through thermal processes such as incineration or calcination. Many of these systems are described in Reference 1. These systems are frequently large scale units, are expressly designed for radiological applications, including personnel shielding considerations, and are equipped with extensive (and complicated) airborne effluent treatment systems.

The focus of this report, however, is on treatment and disposal of waste which has so little radioactivity that it can be handled under considerably less restrictive criteria than most low-level waste streams. The type of incinerator design that is of interest in this appendix is therefore not a large-scale system designed expressly for radioactive waste treatment. Rather, the interest in this appendix is on smaller incinerator designs that were originally intended for purposes other than low-level waste incineration, and which typically feature less complex airborne effluent treatment systems. Control of radionuclide releases would be principally achieved by limiting the radionuclide concentration in the waste as well as the rate of waste feed to the incinerator.

The reference on-site incinerator is thus assumed to be a small unit of the type commonly used by institutions, universities, research facilities, and hospitals to dispose of materials such as biological wastes, scintillation fluids and other organic liquids, and trash. Small licensees such as institutions, universities, research facilities, and hospitals are probably the types of licensees who are most likely to incinerate de minimis waste on-site. The reference on-site incinerator, discussed below, is assumed to be quite similar to the pathological incinerator outlined in Reference 2.

Pathological incinerators are often multiple chamber designs with hot refractory hearths (frequently fixed hearths) and which operate at temperatures ranging from 900°C to 1000°C. Off-gas treatment systems vary, although use of high efficiency particulate air (HEPA) filters, vapor condensers, and wet scrubbers are common. Typical process rates range from 100 to 500 lbs/hr. A diagram of a representative multiple chamber incinerator with a pathological waste retort is provided as Figure C.1 (Ref. 2).

000305

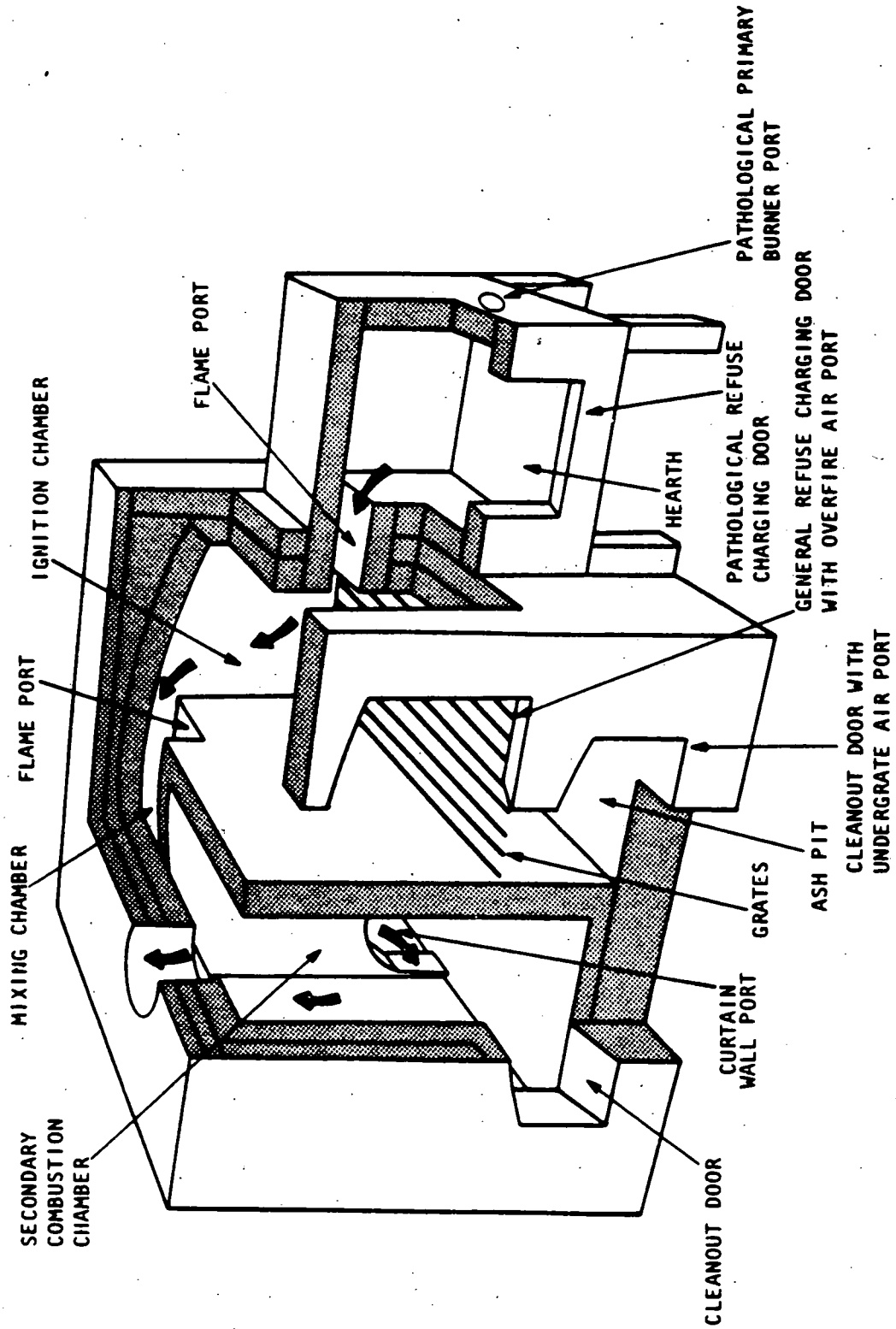

MULTIPLE-CHAMBER INCINERATOR WITH A PATHOLOGICAL-WASTE RETORT

Figure C.1

Pathological incinerators may be used to volume reduce biological wastes, scintillation fluids and other organic liquids, and trash. Aqueous liquids can also be evaporated on the refractory hearth. Typical volume reduction factors (the ratio of the waste volume prior to incineration to the volume of the incinerated residue) are given in Table C-1. Such incinerators are currently frequently used to dispose of biological waste (e.g., animal carcasses) and scintillation fluids and vials containing small quantities of beta-emitting radionuclides such as tritium or carbon-14. Incineration of wastes containing isotopes such as I-125, I-131, Co-60, or Cs-137 is performed less often. Release of radioactivity to the atmosphere is generally controlled by controlling the rate of waste feed (Ref. 2).

Decontamination factors for the reference pathological incinerator are estimated below, where the decontamination factor is defined as the ratio of the total amount of (mass or radioactivity) of a given species input in a given time interval to the total amount of that species in the treated off-gas in the same time interval. Decontamination factors are therefore the inverses of the release fractions.

The decontamination factors are estimated using various data. One source of data considers incineration of human tissue and animal carcasses in eight pathological incinerators. In these eight incinerators, the average feed rate was 41.2 kg/hr, the average particulate release rate was 6.54E-5 kg per m^3 of off-gas, and the average off-gas flow rate was 1580 m^3/hr (Ref. 2). These values indicate that about 2.51E-3 kg of particulates were released per kilogram of waste burned. A particulate decontamination factor (DF) of about 400 is obtained from the inverse of this ratio. Another source characterizes particulate releases for pathological incinerators in the size range of 50 to 100 lbs/hr and equipped with combustion controls and afterburners to ensure good combustion and minimal emissions. In this reference, a particulate release rate of 8 lb per ton of waste is estimated, which corresponds to a release fraction equal to 4.0E-3, or a DF equal to 250 (Ref. 6).

It is assumed that the particulate DF is applicable to all radioactive species except iodine (I-129), chlorine (Cl-36), ruthenium (Ru-103, Ru-106), technetium (Tc-99), tritium (H-3), and carbon (C-14). On the basis of the DF's reported for a fluidized bed calciner/incinerator (see Section C.5.1 of Reference 2), a DF of 100 is assumed for iodine, technetium and other semi-volatiles. Decontamination factors of 1.1 and 1.3 are assumed for tritium and carbon-14, respectively. These factors correspond to release of 90% of the tritium and 75% of the carbon-14 initially present in the waste. A summary of

000307

Table C-1. Typical Volume Reduction Factors (VRF) for Pathological Incinerators

Waste Type	VRF
Trash, uncompacted	20
Full liquid scintillation vials	
Glass vials	4
Polyethylene or nylon vials	>100
Scintillation fluids and organic liquids	>100
Aqueous liquids	>100
Biological waste	15

the decontamination factors and release fractions assumed for the reference pathological incinerator is given below.

Reference Pathological Incinerator

Nuclide	DF	Release Fraction
H-3	1.1	0.90
C-14	1.3	0.75
Cl-36	100	0.01
Tc-99	100	0.01
Ru-103	100	0.01
Ru-106	100	0.01
I-125	100	0.01
I-129	100	0.01
All others	400	2.5E-3

Other facility-specific parameters, such as the annual throughput of waste through the incinerator, the waste mass reduction factor, and the density of incinerator residue must be supplied by the user of the codes. This is discussed in more detail in the next section.

C.2.2 Reference On-Site Disposal Area

Background

The option of disposal by a licensee on his own property (on-site disposal) may take a variety of forms, depending upon the level of regulatory control placed upon such disposal and the characteristics of the disposed materials. One form of disposal which was occasionally practiced in the past was the option formerly set forth in NRC regulations as Section 20.304 of 10 CFR Part 20. In Section 20.304, licensees were authorized to dispose of specified small quantities of radionuclides by burial in soil without prior approval. Limiting quantities of various radionuclides were set forth in Appendix C of Part 20. Burials were required to be at least 4 feet deep, each burial was required to be separated from other burials by at least 6 feet, and no more than 12 such burials were allowed per year.

This section of the NRC regulations was deleted in October 1980 (Ref. 3) in response to suggestions made by representatives of several states. The main concern was that there were no records kept of the total amount of material disposed, nor of the location of such disposal. Although the deletion of Section 20.304 was essentially a policy decision, an attempt at a technical justification was provided by the observation that Section 20.304 imposed no radionuclide concentration limits. As stated in Reference 3, "such quantities pose a small risk if they are properly buried and left undisturbed, particularly if they are dispersed through a large volume of waste material. However, Section 20.304 imposes no concentration limits, and the quantities as concentrated "point sources" are potentially large enough to cause excessive radiation exposures if the radioactive material is mishandled, improperly buried, or disturbed after burial. For example, Section 20.304 allows burial of up to one millicurie of cobalt-60. As a point source this quantity delivers a dose rate of over 100 millirems per hour at a distance of 10 centimeters. If a burial site were disturbed, and a person came into contact with one millicurie of cobalt-60 for an extended period, an over-exposure could occur."

000309

In deleting Section 20.304, the Commission did not prohibit on-site disposal of small quantities of radionuclides, but required that licensees obtain prior approval before conducting such disposal. However, one of the purposes of deleting Section 20.304 was to minimize waste burials by individual licensees. Licensees are currently required to file an application for such disposal and this application is being assessed pursuant to Section 20.302 of 10 CFR Part 20. Section 20.302 requires licensees to submit information describing the waste material, the levels of radioactivity involved, the proposed conditions of disposal, the environment of the disposal site, and procedures to be observed to minimize the risk of unexpected or hazardous exposures. NRC later provided additional guidance regarding the information to be included in such applications, and this information is summarized as Figure C.2 (Ref. 4). The authors do not expect that many such applications will be received.

The above disposal option is principally geared toward wastes generated by small licensees such as hospitals, research facilities, or universities, and for such waste types as miscellaneous trash. Another consideration is a situation in which a licensee may have very large quantities of diffusely contaminated material such as dirt contaminated with tiny concentrations of thorium or uranium. The authors know of no requirements or guidance for licensees to dispose of such material by application and preapproval, other than Section 20.302. However, NRC has published guidance in the form of a technical position on disposition of existing thorium and uranium processing facilities, the grounds of which are known to be contaminated with residual radioactive materials (Ref. 5). Although this guidance is restricted to remedial actions at existing facilities (and not applicable to any newly licensed facilities), it is useful to discuss the guidance as background to assumptions developed for the reference on-site disposal area.

As noted in Reference 5, some of the sites formerly used for processing thorium and uranium are known today to be contaminated with residual radioactive materials. Some are currently covered by NRC licenses. Others were once licensed, but the licenses to possess and use material have expired. In many cases, the total amount of contaminated soil is very large, but the concentrations of radioactive materials are believed to be sufficiently low to justify their disposal or storage on-site rather than their transport off-site to a commercial disposal site. In many instances packaging and transporting the wastes off-site would be too costly and not justified from the standpoints of risk to the public health or cost-benefit. Furthermore, because of the high volume of waste, limited commerical waste disposal capacity, and restrictions placed on receipt of waste at commercial sites, it is not presently feasible to dispose of these materials at commercial sites (Ref. 5).

The technical position establishes five acceptable options for licensees to apply for disposal or on-site storage of thorium and uranium contaminated wastes. The applications would be reviewed pursuant to Section 20.302 of 10 CFR Part 20, and the matters of principal importance would include:

- Concentrations of thorium and uranium present
- Volume of contaminated soil
- Costs for off-site and on-site disposal
- Availability of off-site burial space
- Disposal site characteristics
- Depth of burial and accessibility of buried wastes
- State and local government views

Figure C.2

Summary of Information Needed in an Application for Burial of Radioactive Waste in Soil by Individual Licensees

---

1. Justification. It is incumbent on the applicant to demonstrate that local land burial is preferable to other disposal alternatives. Convenience and lesser cost than other disposal methods will not, by themselves, be considered acceptable justification.

2. A description of the type and quantity of material to be buried.

   a. Isotopes and estimated quantity of each isotope for any one burial.

   b. The number of burials anticipated annually.

   c. The estimated volume of waste per burial and annually.

   d. The physical form(s) of the waste.

3. Packaging for the waste. As a minimum, waste should be packaged in strong, tight containers which would preclude loss of the contents. Acceptable containers would include, for example, 55-gallon steel drums or steel boxes which would not be readily susceptible to corrosion. Cardboard or wooden boxes would not be considered suitable containers. If packaging is not contemplated, an explanation and justifiction for not packaging should be submitted.

4. Burial location. In general, only burial sites which are located on the property of the applicant will be considered acceptable. The nature of the waste proposed to be buried should be such that long-term site control is not necessary for protection of public health and safety. A map or sketch of the applicant's property which shows specifically where on the property burials will be made should be submitted.

5. Nature of the burial site. An analysis of the adequacy of the site which demonstrates that transport of radioactive material away from the site is highly unlikely to occur must be submitted. Information which should be included in the analysis is the nature of the environment, including topographical, geological, hydrological, and meteorological characteristics of the site; usage of ground and surface waters in the general area; and the nature and location of other potentially affected facilities. The water table should be a minimum of 10 feet below the depth at which the waste will be buried. The 10-foot depth should be the high point for the water table.

6. Depth of burial. The depth at which waste will be buried should be specified. As a minimum, the burial depth should be at least 4 feet below the surface.

000311

Figure C.2 (Continued)

7. Restriction and posting of burial sites. The means for assuring that access to the burial site will be limited to authorized personnel should be described. An acceptable method for access restriction would be an 8-foot chain link fence around the site posted with "CAUTION-RADIOACTIVE MATERIAL" signs.

8. Radiation safety procedures. The specific program for handling the waste to be buried, including radiation safety precautions to be followed, should be submitted.

9. Recordkeeping. The program for maintaining records of burial should be described.

10. Local requirements. The contacts made with local officials to determine the extent to which local laws and requirements could affect burial of radioactive waste should be described. It is the responsibility of the applicant to assure that all local requirements are met.

11. Notification. Notification in writing is required when the licensee decides to permanently discontinue all activities involving licensed materials. Therefore, if for some reason a licensee intends to abandon, sell, transfer, or otherwise give up control of the burial site, NRC must be notified.

The five options include:

1. Disposal of acceptably low concentrations of thorium and uranium with no restriction on burial method.

   Under this option, the concentrations of thorium and uranium are set sufficiently low that no member of the public is expected to receive a radiation dose commitment from the disposed materials in excess of 1 millirad per year to the lung or 3 millirads per year to the bone from inhalation and ingestion, under any foreseeable use of the material or property. Limiting concentrations for this disposal option are as follows:

Kind of Material	Concentration (pCi/gm)
Thorium (Th-232, Th-228) if all daughters are present	10
Depleted uranium	35
Enriched uranium	30
Natural uranium (U-238 plus U-234) if all daughters present	10

   These concentrations are of the same order of magnitude (or less) as naturally occurring thorium and uranium concentrations (e.g., 120 pCi/gm of uranium in Florida phosphate rock and 50-80 pCi/gm of uranium in Tennessee bituminous shale). It is also expected that currently licensed operations will be conducted in such a manner as to minimize the possibility of soil contamination and when such occurs to reduce the contamination to levels as low as reasonably achievable.

2. Disposal of certain low concentrations of thorium and uranium when buried under prescribed conditions with no subsequent land use restrictions and no continuing NRC licensing of the material.

   Under this option the concentrations of thorium and uranium are set so that no member of the public will receive a radiation dose exceeding those discussed under option 1 when the wastes are buried in an approved manner absent intrusion into the burial grounds. This option will require establishing prescribed conditions for disposal in the license, such as depth and distribution of material, to minimize the likelihood of intrusion. Burial will be permitted only if it can be demonstrated that the buried materials will be stabilized in place and not be transported away from the site. Acceptability of the site for disposal will depend on topographical, geological, hydrological and meteorological characteristics of the site. At a minimum, burial depth will be at least 4 feet below the surface. In the event that there is an intrusion into the burial ground, no member of the public will likely receive a dose in excess of 170 millirems to the whole body or any individual body organ.

000313

The average concentration of radioactive material that may be buried under this option in the case of natural thorium (Th-232 plus Th-228) is 50 pCi/gm, if all daughters are present and in equilibrium; for enriched uranium it is 100 pCi/gm if the uranium is soluble and 250 pCi/gm if insoluble; for depleted uranium it is 100 pCi/gm if the uranium is soluble and 300 pCi/gm if insoluble. Natural uranium containing radium-226 and its daughters are not included under this option.

3. Disposal of low concentrations of natural uranium ores, with all daughters in equilibrium, when buried under prescribed conditions in areas zoned for industrial use and the recorded title documents are amended to state in the permanent land records that the land contains buried radioactive materials and are conditioned in a manner acceptable under state law to impose a covenant running with the land that the specified land may not be used for residential building. (There is no continuing NRC licensing of the material.)

   Disposal will be approved if the burial criteria outlined in option 2 are met, including burial at a minimum of 4 feet. (Depending upon local soil characteristics, burial at depths greater than 4 feet may be required.) In order to assure protection against radon-222 releases, it is necessary that the recorded title documents be amended to state in the permanent land records that no residential building should be permitted over specified areas of land where natural uranium ore residues (U-238 plus U-234) in concentrations exceeding 10 pCi/gm have been buried. Industrial building is acceptable as long as the concentration of buried material does not exceed 40 pCi/gm of uranium (i.e., Ra-226 shall not exceed 20 pCi/gm).

4. Disposal of land-use-limited concentrations of natural thorium or natural uranium with daughters in secular equilibrium and depleted or enriched uranium without daughters present when buried under prescribed conditions in areas zoned for industrial use and the recorded title documents are amended to state that the land contains buried radioactive material and are conditioned in a manner acceptable under state law to impose a covenant running with the land that the land: (1) may not be excavated below stated depths in specified areas of land unless cleared by appropriate health authorities, (2) may not be used for residential or industrial structures over specified areas where radioactive materials in concentrations higher than those specified in options 2 and 3 are buried, and (3) may not be used for agricultural purposes in the specified areas. (There is no continuing NRC licensing of the disposal site.)

   Under this option, conditions of burial will be such that no member of the public will receive radiation doses in excess of those discussed under option 1 absent intrusion into the burial ground. Criteria for disposal under these conditions is predicated upon the assumption that intentional intrusion is less likely to occur if a warning is given in land documents of record not to excavate below burial depths in specified areas of land without clearance by health authorities; not to construct residential or industrial buildings on the site; and not to use specified areas of land for agricultural purposes. A maximum individual exposure limit of 500 millirems per year to thorium and uranium buried under this

restriction is therefore applied instead of 170 millirems as used in options 2 and 3. In addition, any exposure to such materials is likely to be more transient than assumed (essentially continual exposure) under those options. These two factors combining to increase the concentration limits calculated under option 2 by about 10. Thus, the average concentration that may be buried under this option for thorium (Th-232 plus Th-228) is 500 pCi/gm if all daughters are present and in equilibrium; for enriched uranium it is 1000 pCi/gm if the uranium is soluble and 2500 pCi/gm if insoluble; and for depleted uranium it is 1000 pCi/gm if the uranium is soluble and 3000 pCi/gm if insoluble. With respect to natural uranium with daughters present and in equilibrium, the concentration that may be buried under this option is 200 pCi/gm of U-238 plus U-234 (i.e., 100 pCi/gm of Ra-226). Depending upon local soil characteristics, burial at depths greater than 4 feet may be required.

5. Storage of licensed concentrations of thorium and uranium on-site pending the availability of an appropriate disposal site.

   When concentrations exceed those specified in option 4, long-term disposal will not normally be a viable option. In such cases, the thorium and uranium may be permitted to be stored on-site under an NRC license until a suitable method of disposal is found.

Reference Treatment/Disposal Facility

It is apparent that unlike municipal or hazardous waste disposal, relatively few assumptions may be made for the design and operation of the reference on-site treatment or disposal facility. Parameters quantifying such specifications must be frequently supplied by the user of the computer codes. A minimum list of parameters to be supplied by the code user is provided as Table C-2, along with sections in this report where such parameters are discussed. All of these parameters address the characteristics of the waste treatment or disposal facility, and are independent of the environmental characteristics of the treatment/disposal facility site. These parameters, which are input by the code user in addition to the decision indices discussed in Chapter 2, are briefly discussed below. Parameters dependent upon the treatment/disposal site environmental characteristics are discussed in Section C.5.

Parameters specific to the on-site incinerator include VINC and OSWR. VINC, in cubic meters, is the annual volume of all waste (radioactive plus non-radioactive) processed through the on-site incinerator. OSWR is dimensionless, and denotes the overall mass (as opposed to volume) reduction factor for the incinerator. It is defined as the mass of the waste input to the incinerator divided by the mass of the incinerated waste residue. The airborne release fractions for the reference incinerator are not input by the code user but are provided internally within the codes using data statements. The code user may optionally use different airborne release fractions by making some simple code modifications.

Parameters specific to the on-site disposal area include VANN, ADAY, EMP, SEFF, EFF, RMIX, and OSDL. VANN is input in units of m^3 and denotes the annual volume of all waste (radioactive plus non-radioactive) disposed at the

000315

Table C-2. On-Site Treatment and Disposal Facility Parameters

Parameter	Units	Description	Reference
VINC	m^3	Total waste volume incinerated annually	Section 4.2
OSWR	*	Incinerator mass reduction factor	Section 4.2
VANN	m^3	Total waste volume disposed annually	Section 5.1
ADAY	m^2	Daily exposed area at disposal facility	Section 5.1
EMP	*	Waste emplacement efficiency	Section 6.3.1
SEFF	*	Surface utilization efficiency	Section 6.3.2
EFF	m	Volumetric disposal effiency	Section 6.3.1
RMIX	*	Cover mixing efficiency	Section 6.2.1
OSDL	g/m^3**	Disposal facility airborne dust loading	Section 5.1
DEN2	g/cm^3	Density of waste being disposed	Section 5.1
GERO(1)	yrs	Delay time until start of erosion scenario	Section 6.4

*Dimensionless.
**Grams per cubic meter of air.

on-site facility. ADAY, in m^2, denotes the daily exposed area of the facility working face. That is, assuming a given volume of waste disposed per day, ADAY represents the surface area of the waste exposed to dispersion by wind or mechanical action. EMP is the waste emplacement efficiency, and is the ratio of the volume of the waste disposed to the total volume of available disposal space. (That is, assuming that a disposal cell is excavated and waste emplaced within it, the emplacement efficiency accounts for the fraction of the space within the originally excavated disposal cell that consists of backfill. The disposal cell cover is considered separately as discussed below.) SEFF is also dimensionless, and denotes the surface utlization efficiency. This is included to account for the possibility that waste is disposed in a series of separated holes to disposal cells. SEFF is defined as the total surface area of the disposal cells (the effectiv site surface area - S_f) divided by the total surface area of the disposal cells plus any space between the disposal cells. EFF stands for the volumetric disposal efficiency and is given in units of meters. It is the ratio of the total volume (m^3) of available disposal space within the disposal cells to the total surface area (S_f-in m^2) of the disposal cells.

RMIX is dimensionless, stands for the cover mixing efficiency, and is discussed in Section 6.2.1 of Chapter 6. RMIX may be calculated using Figure 6.1, and is the fraction of the total volume of material during the intruder-construction scenario that consists of the disposed soil/waste mixture. OSDL is input in units of g/m^3, and stands for the on-site dust loading as discussed in Section 5.1. It is used as part of calculations providing a conservative upper-bound estimate of off-site impacts from disposal operations.

DEN2 is in units of g/cm^3, and refers to the average density across all the waste disposed in the on-site facility. DEN2 is the density of the waste as it is being disposed and compacted, which may differ from the density of the waste prior to disposal. This is a common occurrence at a sanitary landfill.

GERO is the delay time (in years) prior to initiation of the erosion scenario at the disposal facility, and is discussed in Section 6.4. The delay time is specific to the particular disposal facility considered. As discussed in Section 6.4, the delay time is assumed for each of the four reference facilities (sanitary landfill, open dump, and the two hazardous waste facilities) and provided by the user of the code for the on-site facility. The notation GERO(1) indicates that the on-site delay time corresponds to the first member of a five member array.

C.3 MUNICIPAL SOLID WASTE TREATMENT AND DISPOSAL

This chapter presents a background and discusses the assumptions for the reference facilities assumed for treatment and disposal of de minimis waste as a municipal solid waste. The chapter is separated into two principal sections: Section C.3.1, Solid Waste Incineration, and Section C.3.2, Solid Waste Disposal.

000317

Section C.3.1 first presents a subsection providing a background on municipal waste incineration and includes data on typical incinerator design and operation, airborne effluent treatment, personnel requirements, and design variations. Additional information on waste processing options is provided in Appendix B. The next subsection, subsection C.3.1.2, presents the assumptions regarding the operation of the reference municipal incinerator, which is a 500 tons/day refractory walled unit featuring no waste pretreatment or resource recovery. This is followed by a subsection addressing optional ("sorting") modules for waste pretreatment and recovery of metal and glass.

Section C.3.2 addresses solid waste disposal, and two reference facilities are assumed which have different operating characteristics and long-term environmental impacts. These are a reference sanitary landfill and a reference open dump.

C.3.1 Solid Waste Incineration

C.3.1.1 Background on Municipal Waste Incineration

Incineration is a widely used method for volume reduction of municipal waste. Following combustion, a more or less non-combustible residue is produced which may then be disposed in a theoretically more environmentally acceptable manner than the original waste stream. As of about 1967, the installed incinerator capacity in the United States totalled about 74,600 tons/day. This capacity was spread through about 300 municipal incinerators plus several thousand small industrial incinerators, often models in the 200-500 lb/hr range and also frequently utilizing two-stage combustion. It has also been estimated that about 70% of the existing incinerators were without adequate air pollution control devices, were often overloaded, and did not meet existing air quality standards. One of the principal reasons for this is that most of the existing incinerators are of older designs, are relatively inefficient, and were built several years prior to passage of the Clean Air Act in the 1970's. In addition, many produced residues and quench waters that were released into the environment without adequate treatment and control (Ref. 7).

It is apparent from the above paragraph that considerable improvement could be made in the design and operation of incinerators used for treatment of municipal waste. The need for improvement has been noted by EPA and others, and progress has been made in improving the efficiency of combustion and reducing environmental releases. New incinerator designs are being developed, tested, and placed into operation. Over the next several years, however, and at least to the end of the century, most municipal waste processing through incineration will probably continue to be performed at the older, less efficient units. (Additional information is provided in Appendices A and B.)

Typical Municipal Incinerator Operation

Practically all incinerators now in operation are built to operate at moderate temperatures--i.e., in the range of 1300 to 1800°F. Practically all are constructed of refractory-lined brick with no provision for recovery of the heat produced by combustion. Typically, incineration in municipal facilities leaves a residue (ash, glass, metals, etc.) that is reduced to about 10 to 25% of the original volume of the waste feed. Municipal incinerators may be

operated in a batch or continuous mode, but most of the later ones are designed for continuous operation, as this leads to lower maintenance requirements and more efficient combustion (Ref. 8).

A cross section of a typical municipal refuse incinerator is shown in Figure C.3 (Ref. 8). In general, waste arrives at the incinerator in motor vehicles (trailers, compactor trucks, etc.). After weighing the loaded vehicles, the waste is dumped into a large storage pit. The volume of the storage pit is generally equivalent to 5 to 7 days input of waste. Typically constructed of concrete, the size of the storage pit may range from 20 to 40 feet wide, from 40 to 80 feet deep, and up to several hundred feet long for very large facilities. The storage pit is often enclosed to protect against wind and weather, and also to reduce the odors, dust, and noise associated with incinerator operation. Water pipes are often incorporated into the pit design to extinguish fires occasionally resulting from spontaneous combustion of the waste.

Waste enters the combustion chamber through a charging chute which is generally located at a much high elevation than the storage pit. An overhead crane--generally a bridge crane in larger incinerators--equipped with a clamshell bucket or grapple is therefore used to transfer the refuse from the storage pit to the charging chute. The facility will also incorporate some method to remove bulky or otherwise unwanted items from the feed which could otherwise possibly clog the charging chute. These items could include appliances, for example, or mattresses, drums, or tree stumps. The criteria for removing bulky items from the input waste feed will vary depending upon the incinerator. One obvious factor will be the cross-sectional size of the charging chute. For smaller chutes, smaller items must be rejected. After removal, incinerator operators may exercise one of three options: (1) send the bulky items to a waste disposal facility (landfill), (2) send the bulky items through a size-reduction process prior to incineration, or (3) send the bulky items to a small incinerator specifically designed for such material.

Operation of the transfer crane will be somewhat influenced by the density of the waste, which will be a variable depending on the waste composition, the moisture content, and the extent to which the waste is compacted during collection. In general, waste arriving without compaction will be in a density range of about 200-300 lb/yd^3 (0.12-0.18 gm/cm^3), while waste arriving in standardized collector trunks will typically be in a density range of about 500-700 lb/yd^3 (0.30-0.42 gm/cm^3). After the compacted waste is dumped into the storage pit, however, the density of the waste is likely to decrease to approximately 400 to 500 lb/yd^3 (0.24-0.30 gm/cm^3) (Ref. 8). Since variations in composition, density, and moisture content tend to reduce combustion efficiency, the transfer crane will often be used to mix the refuse in the storage pit. In addition to producing a more uniform feed at the charging chute, the mixing action reduces the potential for spontaneous combustion of the waste.

Waste is then fed into the furnace through a charging chute. In batch-fed furnaces, the chute is equipped with a gate which is closed except for waste charging purposes. In continuous-feed furnaces, the charging chute is maintained full of waste, which provides an air seal for the furnace. The chute is generally rectangular and care is taken to ensure a smooth surface so that waste readily passes down the chute. Sometimes the cross section of the chute

000319

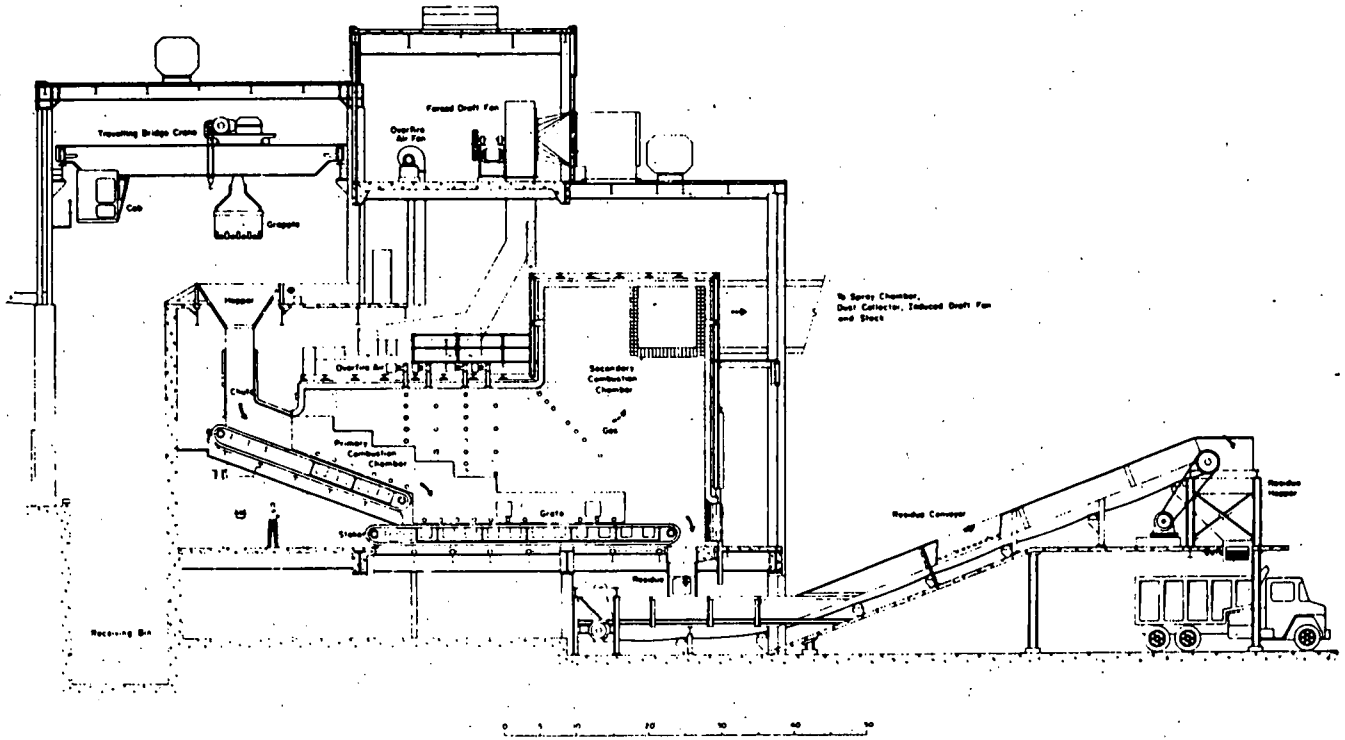

Figure C.3 Cross-Section Through a Typical Municipal Incinerator

000320

6400

increases from top to bottom. A charging hopper is generally built into the top of the charging chute. The hopper is built in the shape of an inverted truncated pyramid and provides an opening into the chute about 4 feet wide by 4 to 10 feet long, and is large enough to contain a full load from the crane.

As might be expected, there is a large variety of furnace designs having different configurations, shapes, and operating characteristics. The most common type of refuse furnace used at this time in the United States is the rectangular furnace, and a sketch illustrating a typical design is shown in Figure C.4. A variation frequently used in large incinerators is the multi-cell rectangular furnace, in which a series of smaller primary combustion chambers are arranged side by side. This variation is also illustrated in Figure C.4. Other commonly used furnaces include the vertical circular furnace, which is an older design frequently used in batch-feed operations, and the rotary kiln furnace.

In any case, a typical furnace is equipped with a grate system which transfers the waste through a series of combustion zones in the furnace. A number of grate designs have been developed, and some of these include traveling grates (depicted in Figure C.3), rocking grates, reciprocating grates, or Dusseldorf roller grates. From the charging chute, the grates transfer the waste from a drying area, through a zone of ignition, and into the primary combustion chamber. The mechanical motion of the transfer grates agitates the waste for more complete combustion. Air forced up through the grates and through entry ports in the sides of the combustion chamber also agitates the waste and improves combustion.

Combustion in the furnace is controlled by varying the residence time of the waste within the furnace, the temperature at which the combustion takes place, and the degree of turbulence provided to the waste and combustion gases. This can be accomplished by varying the speed of the grates, by varying the amount of excess air provided, and by supplying excess fuel (e.g., oil, gas) at varying rates.

Combustion gases passing out of the primary combustion chamber are first directed into a secondary combustion chamber where additional oxidation takes place. Gases are then directed through whatever airborne effluent treatment system is utilized at the facility, and are then discharged through a chimney. Masonry chimneys are generally preferred over metallic chimneys. If the height of the chimney is insufficient to provide a sufficient natural draft through the furnace, induced- or forced-draft fans are incorporated into the design of the system. A typical incinerator chimney height is about 200 ft (61 m) (Ref. 9).

The solid residues of combustion drop off the end of the transfer grates. This residue amounts to about 10 to 25% of the volume of the original feed and consists of materials such as ash, cans, glass, rocks, and so forth. The composition of the residue can be quite variable. Example residue compositions

000321

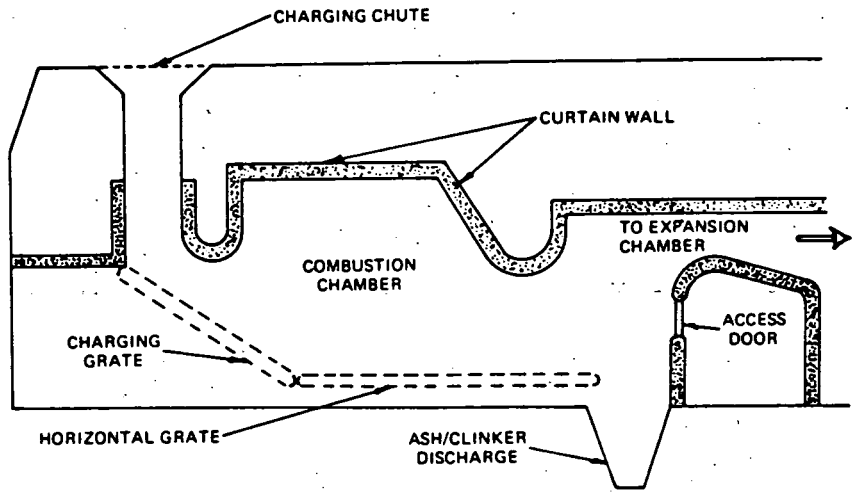

Single-Celled Furnace

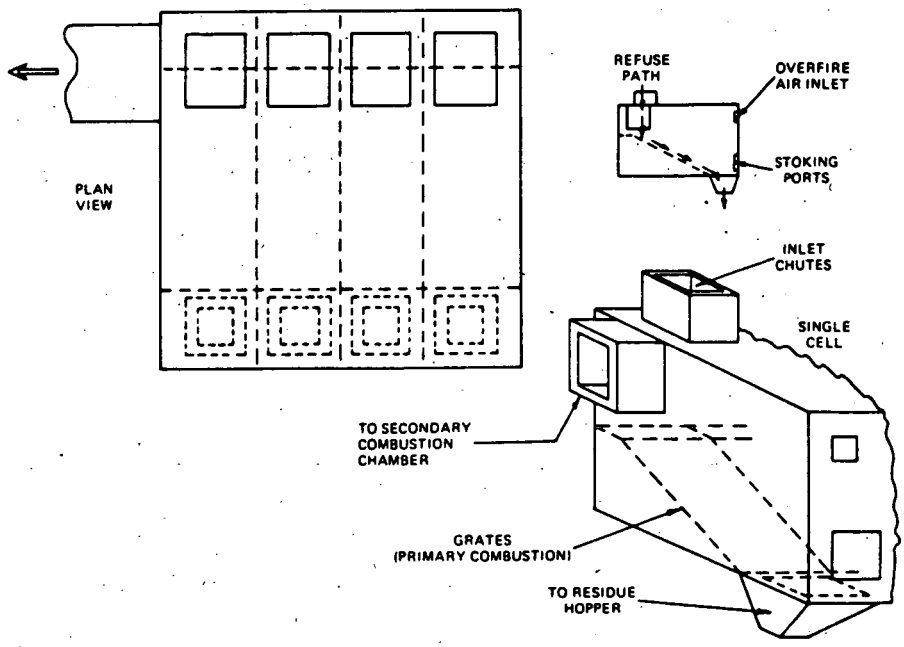

Multi-Celled Furnace

Figure C.4 Illustration of a Typical Refractory Walled Rectangular Furnace

from residue samples obtained from four municipal incinerators are listed below in weight percent (Ref. 9):

Component	Incinerator C	E	F	G	Average
Fines	38.9	74.5	79.4	52.6	61.4
Unburned combustibles	1.3	0.1	0.7	1.1	0.8
Metal	13.0	21.4	16.8	20.0	17.8
Glass, rock	46.8	4.0	3.1	26.3	20.0
Density (lb/yd^3)	-	1490	1620	1600	1570

Much of the residue is very fine and powdered, and of course is at a highly elevated temperature when discharged from the furnace. To preclude wind scattering of the residue and for general ease of handling, residue discharged from the furnace is typically quenched in a quench tank. The damp residue is then transferred to a residue hopper where it may be trucked to landfill disposal.

Water requirements for a large municipal incinerator can be rather high, depending upon the design of the furnace, the residue quenching procedures, and the effluent treatment system. Typical water requirements range from 300 to 2,000 gallons per ton of incinerated waste. Since water used at the facility will be elevated in chemical and solids content as well as temperature, discharge of the water can have environmental consequences. Increased attention over the last several years has been given to treat the water prior to discharge, and also to greater recycle of the water within the facility (Ref. 8).

Throughput of waste through the incinerator will vary depending upon several factors such as weather conditions, the season of the year, and maintenance requirements. Maximum quantities of solid wastes are generated in summer months. Given a particular monthly average throughput, the weekly throughput will typically vary by plus or minus 10%. Maintenance requirements--at least in terms of the time required for repairs--are generally reduced for newer incinerators as compared to older units. Newer continuous-feed furnaces generally require repairs on about a 90-day cycle. The average downtime then typically runs at about 15% of the total operating time during the 90-day period.

Airborne Effluent Treatment

Effluents released through the plant chimney include gaseous combustion products as well as particulates. Gases include aldehydes, nitrogen oxides, organic acids, hydrocarbons, sulfur oxides, carbon monoxide, carbon dioxide, and water vapor. Particulates consist of tiny particles of soot, cinders, dust, ashes, and miscellaneous partially burned materials such as charred paper, and are collectively referred to as "flyash." The sizes of the flyash particles will vary depending upon the incinerator design, its operation, and the composition of the input waste, and range from about 9 to 120 microns in diameter (Ref. 8).

000323

The amounts of gas and particulate emissions are functions of the basic incinerator design, its operating conditions, and the composition of the incinerated refuse. Among all parameters, the greatest influences on the quantity of particulates emitted are (1) the volumes of air forced through the furnace to support combustion (the "excess air requirements"), and (2) the manner in which this air is supplied. Air may be introduced from beneath the combustion zone (under fire air), from the side, or from the top. As the amount of under fire air increases, the amount of flyash emitted also increases. Erratic refuse charging causes disruptions of the combustion bed and consequent releases of larger quantities of particulates. This is especially a problem in batch-fed furnaces, where large quantities of uncombusted particulate matter (as well as carbon monoxide) may be emitted for an extended period of time following charging of the furnace. In continuously fed furnaces, particulate emissions are influenced strongly by the type of grate used. Higher particulate emissions are observed in rotary kilns and rectangular furnaces using reciprocating grates than in rectangular furnaces using rocking or traveling grates (Refs. 8, 10).

Sulfur oxides emissions are a function of the sulfur content of the refuse, while carbon monoxide and uncombusted hydrocarbon emissions are influenced by poor combustion caused by limitations in the incinerator design or in operating conditions. Nitrogen oxide emissions increase as functions of the temperature of the combustion zone, the residence time in the combustion zone prior to quenching, and the excess air requirements (Ref. 10).

Most of the effluent treatment systems installed in current incinerators are mainly geared to particulate removal, and can include devices such as settling chambers, cyclones, wet baffle screens, wet scrubbers, bag filters, and electrostatic precipitators. Settling chambers and cyclones are relatively inefficient but are useful (particularly cyclones) as an uncomplicated means of removing very large particulates prior to further treatment of an air stream, and help prevent clogging of following, more efficient treatment devices. Wet scrubbers can be made to be efficient particulate removers, and also will help remove some of the combustion gases. Most of the existing designs, however, are probably not very efficient. In addition, wet baffle screens and scrubbers share a disadvantage of generating a secondary liquid waste stream. Bag filters operate like oversized vacuum cleaners. Electrostatic precipitators are efficient particulate removers, and operate by electrically charging the suspended particulates and forcing the air stream past a series of oppositely charged baffles. A disadvantage is a high initial installation cost, although operating costs are fairly low.

Typical particulate collection efficiencies of some common incinerator effluent control devices are listed below (Ref. 10).

Type of System	Efficiency (%)
Settling chamber	0 to 30
Settling chamber and water spray	30 to 60
Wetted baffles	60
Mechanical collector	30 to 80
Scrubber	80 to 95
Electrostatic precipitator	90 to 96
Fabric filter	97 to 99

Even with air treatment systems of only moderate effectiveness, significant quantities of flyash will be collected which must be removed from the facility site for disposal or possible other use (see Appendix B). This flyash may be added to the combustion residue, although the two waste streams are also frequently handled separately. Transfer of the flyash for disposal is sometimes accomplished as a wet slurry and sometimes "dry." The former is generally the case when on-site disposal is practiced, since this generally entails use of settling ponds. The latter is the case when the flyash is transported off-site for disposal; this is accomplished using covered trucks and up to 20% water conditioning to prevent dusting (Ref. 7).

Typical particulate emission factors for a number of general incinerator categories are presented in Table C-3, often for incinerators having a minimum of off-gas controls. This information is obtained from a 1977 EPA compilation of air pollutant emission factors for use in estimating airborne impacts from various sources (Ref. 10). A description of the different incinerator categories is also provided in Table C-3 (Ref. 10). Additional data are listed in Table C-4, which summarizes particulate emission factors observed in a 1970 study of seven existing operating municipal incinerators (Ref. 9). Generally, the emission factors for the seven municipal incinerators are less than the typical values summarized from Reference 10. It was noted, however, that all incinerators would still either exceed or have difficulty meeting even the most minimal air pollutant standards (Ref. 9). It is also interesting to note in Table C-3 that typical release fractions for most incinerator types seem to be within about a factor of 5.

Personnel Requirements

The personnel requirements at a municipal incinerator will vary depending upon the incinerator facility design and throughput. Newer facilities can probably be expected to be much more automated than older facilities, and therefore less labor intensive. Personnel will typically include an overall supervisor, a scalemaster, crane operators, charging-floor operators, general process controllers, residue removal operators, and maintenance men (Ref. 8).

A rough estimate of the average personnel requirements per ton of incinerated waste can be made using data from Reference 9, which is a survey and evaluation of seven large incinerators. The estimate is made using data for yearly projected labor costs and is summarized below. (Cost data was not available for one incinerator.) All the plants were constructed in the 1960's. Shown is the labor requirements in man-hours per ton of incinerated waste for each facility in addition to the average labor requirements over all six incinerators. The percentage of labor costs attributable to maintenance activities is also shown.

000325

Table C-3. Particulate Emission Factors by Incinerator Category

Incinerator Type	Emission Factor (lb/ton)[a]
Municipal[b]	
Multiple chamber, uncontrolled	30
With settling chamber and water spray system[c]	14
Industrial/commercial[d]	
Multiple chamber	7
Single chamber	15
Controlled air[e]	1.4
Trench[f]	37
Flue-fed[g]	
Single chamber	30
Modified	6
Domestic single chamber[h]	
Without primary burner	35
With primary burner	7

[a]Pounds of particulates (flyash) released per ton of refuse burned.

[b]Municipal multiple-chamber units often have capacities greater than 50 tons/day and are usually equipped with automatic charging mechanisms, temperature controls, and movable grate systems. Municipal incinerators are also usually equipped with some kind of particulate control device such as a spray chamber or electrostatic precipitator.

[c]Most municipal incinerators are equipped with at least this much effluent control.

[d]The capacities of these units generally range from 50 to 4000 lb/hr, and are often manually charged and intermittently operated. Of either single- or multiple-chamber design, some industrial incinerators are similar to municipal incinerators in size and design. Better equipped emission control systems include gas-fired afterburners, scrubbers, or both.

[e]These units operate on a controlled combustion principle in which the waste is burned in the main chamber in the absence of sufficient oxygen for complete combustion. The resulting highly combustible gas mixture is burned with excess air in a secondary chamber, resulting in efficient combustion. These units are usually equipped with automatic charging mechanisms and are characterized by high effluent temperatures.

Table C-3 (Continued)

[f]A trench incinerator is simple to construct and inexpensive to operate. In operation, a trench is first dug and filled with waste. A U-shaped combustion chamber is formed by the sides and bottom of the trench and air is supplied from nozzles along the top of the trench. The angles are directed at an angle below the horizontal to provide a curtain of air across the top of the trench and to provide air for combustion. The trench incinerator is relatively inefficient, but is often used to dispose of a variety of materials. The release fraction listed is for municipal refuse. Typical release fractions for other materials include wood: 13 lb/ton, and rubber tires: 138 lb/ton.

[g]These units are commonly found in large apartment houses and are characterized by the charging method of dropping refuse down the incinerator flue and into the combustion chamber. Modified flue-fed incinerators use afterburners and draft controls to improve combustion efficiency and reduce emissions.

[h]This category includes incinerators marketed for residential use. Fairly simple in design, they may have single or multiple chambers and are usually equipped with an auxiliary burner to aid combustion.

000322

Table C-4. Measured Particulate Emission Factors for Seven Municipal Incinerators

Incinerator	Year Built	Description	Emission Factor (lb/ton) (a)
A	1966	300 ton/day refractory-walled, multiple-chambered furnaces with inclined, reciprocating grate sections followed by stationary grate sections. Equipped with a wet scrubber.	10.4
B	1966	300 ton/day refractory-walled multiple-chambered furnaces with three sections of inclined rocking grates. Equipped with wet scrubber, flooded baffle walls.	14.5
C	1967	5-6 ton/day conical burner with double metal walls and fixed grates. Equipped with centrifugal-type water scrubber, afterburner and water scrubber, and electrostatic precipitator.	3.1 (b)
D	1965	500 ton/day refractory-walled multiple-chambered furnaces with two sections of traveling grates (one inclined and one horizontal). Equipped with wet scrubber (flooded baffle walls).	8.8
E	1963	500 ton/day furnaces with three reciprocating grate sections followed by a rotary kiln. Equipped with wet scrubbers using a water spray and a baffle wall. Recovery of tin cans and other ferrous metals from residue.	8.6
F	1963	600 ton/day furnaces with three reciprocating grate sections followed by a rotary kiln. Equipped with a wet scrubber using water sprays and a baffle wall.	12.5
G	1967	400 ton/day furnaces with four sections of inclined reciprocating grates. Equipped with multitube dry cyclones following a wet-baffle wall.	20.4
		Average	11.2

(a) Pounds of particulates (flyash) emitted per ton of refuse incinerated.

(b) Average of three measurements.

Parameter	Incinerator A	B	D	E	F	G
Design capacity (tons/day)	300	300	900	500	600	400
Year constructed	1966	1966	1965	1963	1963	1967
Man-hrs/ton*	0.44	0.74	0.44	0.49	0.36	0.43
Maintenance** requirements (% of labor cost)	14	15	28	30	19	29

* Geometric average = 0.47 man-hrs/ton, arithmetic average = 0.48 man-hrs/ton.
**Arithmetic average = 22.5%, geometric average = 21.4%.

Variations

It is apparent that most existing municipal incinerators suffer from a number of operational drawbacks, including air and water pollution, incomplete combustion in many cases, wastage of the thermal energy created, no recycle of useful materials, and relatively poor volume reduction. A number of improvements which could be implemented, and in some cases are being implemented, are discussed below. It is difficult to project to what extent such improvements will be implemented in American incinerator designs in anything like the near future, since construction of new facilities and modifications to existing facilities will both involve large capital expenditures and waste disposal is generally near the bottom of most communities' list of priorities.

One way in which overall operational efficiency can be improved is to improve the combustion efficiency. Enhancing combustion increases the amount of waste volume reduction achieved and it also reduces airborne effluents, since the excess air requirements would be lower. Reduced excess air requirements means reduced particulate loadings in the airborne effluent stream as well as a reduced volume of air to be treated.

One way to increase combustion efficiency is to reduce the sizes of the individual pieces of refuse. That is, input refuse would be first directed to a pretreatment process such as a hammermill in which waste is chopped into smaller individual sizes. This creates a more homogeneous waste mixture which is easier to agitate and which improves combustion. Once the waste has been reduced in size, it is possible to send the waste through further treatment processes to remove non-combustible items prior to incineration. An air classifier, for example, will remove heavy items such as metal or glass from lighter, combustible materials such as paper or plastic. Separated heavier materials may also be further treated to recover items such as metals which may be recycled. Much work has been done to develop such recycle systems, which are termed "head-end" systems since they remove recyclable materials prior to incineration. There has also been some progress in developing systems for recovery of recyclable materials after combustion, although recovery from such "back-end" systems is apparently more difficult than from head-end systems. (Consult Appendix B for further information on waste pretreatment and materials recovery processes.)

000329

Another obvious improvement is to recover and utilize the heat generated through combustion. One method frequently used in Europe and only occasionally used in the United States is to line the walls of the furnace with a series of closely spaced metal tubes. Water is circulated through the tubes and the steam thus produced can be used for space or process heat, or possibly for generating electricity. The excess air requirements for such "waterwall" furnaces are greatly reduced (e.g., by about a factor of 4) compared to ordinary furnaces, which reduces particulate entrainment and also results in smaller volumes of effluent gases needing treatment. Operational problems in the United States connected with waterwall furnaces have mainly consisted of pitting of the water tubes in addition to scale deposits within the tube. The former can be controlled by maintaining high water temperatures within the tubes while the latter can be controlled by attention to water chemistry.

A general problem with any heat recovery system is that many times the heat recovered cannot be sold. The steam produced is often unreliable and of poor quality.

Almost all waste processed to the end of the century will probably continue to be incinerated in low-to-moderate temperature furnaces. Most will be refractory wall but increased use will continue to be made of waterwall designs. Newer incinerator designs which have been investigated and will receive some use include fluidized beds and high temperature designs such as slagging furnaces. Designs which produce a liquid or gaseous fuel for later combustion may also be incorporated. Along these lines, considerable work has been performed on pyrolysis units.

C.3.1.2 Reference Municipal Incinerator

The characteristics of the reference municipal incinerator are based upon the previous subsection. The reference municipal incinerator is conservatively assumed to use a refractory wall furnace for which little or no size reduction is performed on the input waste feed. In addition, there is assumed to be no separation of non-combustible items from the waste feed and no recovery of recyclable materials such as metal or glass. ("Sorting" options--size reduction, separations and recovery of recyclable materials--may be added on as modules to the basic unit, and these options are addressed in Subsection C.3.1.3.) The reference facility is assumed to be a 500 tons/day unit which operates at that level for 280 days per year. This size is moderately large and is typical of the size of the incinerators built in the last 20-30 years. The number of operating days per year (280) is also typical of existing practices.

Whether or not the heat of combustion is recovered--i.e., by placing a boiler within the refractory wall furnace--is expected to have a negligible effect on the radiological impacts from burning de minimis waste in the incinerator. The assumption of a waterwall furnace, in which heat may be more efficiently recovered, is believed to be less conservative than a refractory wall furnace. This is because (1) most existing incinerators in the United States are refractory wall designs and will therefore probably still account for most waste incineration to the year 2000, and (2) larger airborne effluents would be expected from refractory wall designs than from waterwall designs.

In operation, waste is assumed to be delivered to the incinerator in trucks or other types of wheeled transport vehicles. The waste is assumed to be dumped into the storage pit and mixed using a waste transfer crane. Bulky items--including mattresses, tree stumps, or waste delivered in packages--are assumed to be sent through a size reduction operation consisting of a small hammermill. This size reduction operation is not nearly as extreme as would be required for extensive materials recovery operations; it is carried out only to the point that the bulky waste can be accommodated by the waste transfer chute. As an option, large metal objects such as appliances or emptied 55-gallon drums may be either size-reduced and incinerated or sold for scrap metal.

Incinerator operation is assumed to result in an overall reduction in waste volume by about a factor of 6, assuming no waste sorting or materials recovery. The residue from combustion is quenched after removal from the furnace and the wet residue is assumed to be trucked to a sanitary landfill, which is assumed to be located within a few miles of the incinerator.

Airborne Effluents. Airborne releases from the reference municipal incinerator are estimated using the information summarized in Sections C.2.1 and C.3.1.1. In Table C-2, EPA estimates a release rate of 14 lb of flyash per ton of waste for a municipal incinerator with a minimal effluent treatment system--e.g., a settling chamber and a water spray system (Ref. 10). This is somewhat greater than the average release rate for the seven incinerators listed in Table C-3 (Ref. 9). It may also be noted that the measured release rates were generally for systems with few off-gas controls, and over the past several years (certainly since acquisition of the data used in References 9 and 10) there has been considerable more interest in improving air quality. As noted in Reference 9, the incinerators examined all had difficulties meeting even the most minimum air quality standards. Since air quality standards have been tightening, this means that the flyash release rates of most incinerators would need to be reduced to meet the tighter standards.

A release rate of 10 lb of flyash per ton of waste is thus conservatively assumed for the reference municipal incinerator. This corresponds to a particulate release fraction equal to 5.0E-3, or an overall decontamination factor (DF) equal to 200. As time goes on and improved airborne treatment systems are installed in the older incinerators, this release rate will be even more conservative. In addition, many of the newer incinerators built over time will probably be waterwall designs.

For volatiles and semi-volatiles, release fractions equivalent to those for the pathological incinerator (Section C.2.1) are assumed. No basis could be found for use of different values.

000331

The release fractions (f_r) and corresponding decontamination factors (DF) assumed for the reference 500 tons/day municipal incinerator are given below:

Nuclide	f_r	DF
H-3	0.90	1.1
C-14	0.75	1.3
Cl-36	0.01	100
Tc-99	0.01	100
Ru-103	0.01	100
Ru-106	0.01	100
I-125	0.01	100
I-129	0.01	100
All others*	0.005	200

*Assumed to be released as particulates

Material Flow. Material flow through the reference municipal incinerator is estimated based upon a number of sources, including References 8, 40, and 41. The assumed composition of the waste input to the reference municipal waste incinerator is listed in Table C-5 (Ref. 40). Also listed for each component is the total daily mass of each component assuming 500 tons/day throughput, the assumed moisture content (wt %), the fraction of inert residue resulting from incineration (wt %), and the density.

The density listed in Table C-5 (250 lb/yd^3) is for uncompacted waste in standardized collector trucks. After collection and compaction, waste density is typically increased to 500 to 700 lb/yd^3. Following delivery to the incinerator, however, the waste will be deposited in a storage bin and mixed using the waste transfer crane. This will tend to reduce the waste density to levels on the order of 500 lb/yd^3 within the waste storage bin.

Daily waste input to the incinerator is thus assumed to be as follows:

315 tons	combustibles (63%)
45 tons	metal (9%)
40 tons	glass (8%)
100 tons	other (20%)
500 tons	

At an assumed density of 500 lb/yd^3 in the incinerator storage bin, this results in an approximate daily volume of waste equal to 2,000 yd^3/day.

During incineration, a portion of the incinerated waste will be carried out of the combustion zone and enter the effluent treatment system, of which a certain fraction will be captured as flyash and the remainder released into the air as an airborne effluent.

Table C-5. Composition of Waste Input to Reference Incinerator

Waste Component	Mass[a] (tons/day)	Weight %	Moisture Content(%)	Inert Residue(%)	Uncompacted Density (lb/yd^3)
Combustibles:	315	63	--	--	--
Paper	200	40	6	6	137.7
Cardboard	20	4	5	5	83.7
Plastics	15	3	2	10	108
Textiles	10	2	10	2.5	108
Garden trimmings	60	12	60	4.5	175.5
Wood	10	2	20	1.5	405
Metal:	45	9	--	--	--
Tin cans	30	6	3	98	148.5
Non-ferrous metals	5	1	2	96	270
Ferrous metals	10	2	2	96	270
Glass:	40	8	--	--	--
Bottles	40	8	2	98	326.7
Other:	100	20	--	--	--
Dirt, bricks, ash, etc.	20	4	8	70	810
Leather	2.5	0.5	10	10	270
Rubber	2.5	0.5	2	10	216
Food products	75	15	70	5	486
	500	100	21.9[b]	--	250[c]

[a]Based on a 500 tons/day incinerator.
[b]Weighted average.
[c]Weighted average.

A typical figure of 35 lb of particulates per ton of incinerated waste is assumed for material carried out of the furnace (Refs. 7, 15). Given the previous assumption of 10 lb of particulates per ton of incinerated waste released out of the facility stack, this results in about 25 lb (dry) of flyash captured by the effluent treatment system per ton of waste. In addition, approximately 119 tons (dry) of residue will be generated per day. This figure is based upon multiplying the mass of each component by the percentage that is transformed into inert residue (see Table C-5). Assuming that the flyash is added to the residue prior to disposal, this results in a total daily solid waste stream equal to:

Flyash	6.25 tons
Residue	119 tons
Total	125 tons (dry)

The residue, however, is assumed to be quenched with water during removal from the incinerator. Assuming a 50% moisture content, this results in a total residue mass equal to about 250 tons/day. The volume of this residue, assuming an overall volume reduction factor of 6 for the incinerator, is about 333 yd^3. This results in a wet residue density of about 1500 lb/yd^3. The composition of the residue is approximately as follows:

Water	125 tons (50%)
Glass	39 tons (16%)
Metal	44 tons (18%)
Ash and other material	42 tons (17%)
	250 tons (wet)

Personnel. Personnel requirements are estimated using information from the previous section. Assuming that it requires an average of 0.48 man-hours per ton of waste, incinerating 500 tons per day would require 240 man-hours. Assuming that each person works 8 hours per day, this conforms to a payroll of about 30 persons. Assumed jobs and personnel requirements for each job are listed as follows:

Occupations	No. of persons	Dust environment	Proximity
Superintendent	1	low	mod
Assist. Super.	1	low	mod
Office Mgr.	1	low	far
Secretary	1	low	far
Scalemaster	2	mod	mod
Crane Operator	2	mod	mod
Charging Floor Op.	6	mod	close
Process Controllers	4	mod	mod
Residue Handlers	4	high	close
Maintenance/labor	8	high	close
Total:	30		

The descriptors "dust environment" and "proximity factor" are used to estimate personnel radiation exposures. To determine inhalation and other exposures due to airborne contaminants, each person working at the incinerator is assumed to work in an environment in which the air is assumed to be at a particular dust loading. For example, a high average for the airborne dust loading for the interior of a house is about 50 μgm of dust per m^3 of air while a high average for natural ambient conditions is about 100 $\mu gm/m^3$ (Ref. 11). The assumed dust loading in which a person works is a function of their occupation. For example, persons who spend much of their time within an office (superintendent, assistant superintendent, office manager, secretary) would be subjected to a smaller airborne dust loading than persons working in proximity to the waste. The largest dust loadings would be assigned to persons who may be in contact with fine-grained materials (refuse handlers, maintenance/labor). Most of the dust would be non-radioactive. The amount of radioactive material that is contained within the dust would be proportional to the fraction of waste input to the facility that is radioactive. A first estimate of the dust loadings for each assumed environment is as follows:

Dust environment	Dust loading ($\mu gm/m^3$)
low	100
mod	200
high	400

Similarly, the proximity factor is used to estimate the exposures to each person due to direct gamma radiation. Each person is assumed to spend a significant amount of time at a particular proximate distance from the waste, which is the source of the direct gamma radiation. Again, persons who spend most the their time within the facility offices are assumed to work at a greater distance from the waste than persons working directly with the waste. In addition, various solid objects such as walls, equipment, and vehicles would

000335

provide shielding. A first estimate of the distances assumed for each proximity factor is given below:

Proximity Factor	Distance (m)
close	1
mod	10
far	30

Other considerations include the facts that the incineration process will vary the volume of the waste handled as well as the tendency for the waste to disperse. That is, the incinerator residue volume will be reduced by about a factor of 6 as compared to the input waste volume. In addition, the residue has a high ash content and so will be in a more dispersible form than the input waste. This could have an effect on the impacts calculated depending upon whether a given site worker spends most of his time at either the "head end" of the facility, where waste is received (e.g., charging floor operators), or the "tail end" of the facility, where residue is removed (e.g., residue handlers). In this report, all personnel except for residue handlers and maintenance/labor are assumed to work at the head end of the facility. Residue handlers are assumed to work at the tail end while maintenance/labor personnel are assumed to spend half their time at the head end and half their time at the tail end.

C.3.1.3 Waste Size Reduction, Separations, and Materials Recovery

Three optional modules, which are collectively referred to as "sorting" modules, are added as adjuncts to the above reference municipal incinerator. The first optional module consists of a pretreatment step in which the waste is reduced in size by mechanical means. This option may be added to any municipal incinerator as a means of improving combustion efficiency and reducing airborne effluents.

The second optional module consists of a size reduction step followed by a waste separations step in which the combustible fraction in the size-reduced waste is separated from the non-combustible fraction. The combustible fraction may be then used as a refuse-derived fuel (RDF), or possibly incinerated with no energy recovery, while the non-combustible fraction is assumed to be sent to landfill disposal. The separations step is useful in that it increases the heat content of the incinerated waste and reduces the volume of incinerated refuse. Removal of the non-combustible fraction also improves the mechanical reliability of furnace operations. (The metal and glass contained in municipal waste leads to increased wear of refractory and other material, and can lead to jamming of grates and other mechanical equipment.)

The third module consists of waste size reduction and separations, followed by recovery of scrap metal and glass for reuse. Such materials recovery can be accomplished by a number of methods but is assumed for this paper to be accomplished as a follow-on to the size reduction and separations operations. This is the most common method proposed to recover such materials (see Appendix B).

As discussed above, waste size reduction is a necessary prerequisite to the materials recovery option, but may be performed for its own purposes as a means of improving combustion efficiency and reducing airborne effluents. Separation of the size-reduced waste into combustible and non-combustible

fractions is another option. The materials thus separated from the combustible function will be a mixture of materials (metal, glass, ceramics, stones, etc.) and economics may dictate against further materials separation and recovery. There may not be a local market, for example, for the ferrous metals recovered, or the separations process may not obtain scrap materials of sufficient quality. In any case, the reference size-reduction module is assumed to consist of a hammermill shredder. The reference separations module is assumed to consist of a hammermill shredder coupled with an air classifier to separate the light combustible fraction from the heavy non-combustible fraction. (See Appendix B for a discussion of the various waste pretreatment and separations processes.)

The materials recovery module is assumed to recover both ferrous and non-ferrous (principally aluminum) metals as well as glass. This is believed to be conservative; while magnetic separators have been in use for several years to separate ferrous metals from mixed materials, there has been less experience with methods to economically separate non-ferrous metals. There is even less experience with separation of high quality glass. The conservativeness of the assumption is illustrated by data from Reference 12, which is an EPA nationwide survey of resource recovery and waste reduction activities. Of 65 municipal refuse resource recovery facilities either operational, under construction, or in advanced planning, 30 facilities* recovered or planned to recover ferrous metals. Aluminum recovery was practiced or planned at only nine facilities while glass recovery was practiced or planned at only seven facilities.

In the model materials recovery module, ferrous metals are assumed to be recovered by magnetic separation while non-ferrous metals are assumed to be recovered by heavy-media separations. Glass recovery is assumed to be achieved by froth separation and by screening. The glass thus recovered is projected to be too high in contaminants (e.g., rocks, pebbles, ceramic pieces, bone, metal bits) for sale as high quality cullet. In addition, it is not color sorted. Therefore, the recovered glass is assumed to be used as an input feed to "glassphalt" production.

As discussed above, reduced airborne effluents would be logically expected from each of the above three optional modules. The authors are unable to find any data, however, with which to quantify this expected reduction. Given this, the same release fractions for the optional modules are conservatively assumed as were assumed for the reference municipal incinerator. The user of the codes, however, may substitute different release fractions as additional data becomes available.

Material Flow. The material flows for the three optional modules are estimated in a similar manner as that for the reference incinerator. In fact, the material flow for the first optional module is assumed to be the same as given previously.

The second optional module involves waste size reduction and separations, but no recovery of recyclable material. In this case, the input waste is assumed to be size-reduced and separated into combustible and non-combustible fractions to the degree available with current separations technologies. For this

---

*At two of the 29 currently operating facilities, ferrous metals are recovered but not sold.

000337

report, the combustible fraction is assumed to contain 95% of the combustible waste, 5% of the metal, 5% of the glass, and 10% of the other material originally contained in the waste. This results in the following distributions, assuming a 500 tons/day incinerator:

Non-combustible		
comb.	19.75 tons	(8%)
metal	38 tons	(20%)
glass	42.75 tons	(23%)
other	90 tons	(48%)
	186.5 tons	
	p = 1038 lb/yd^3	
	v = 359 yd^3	

Combustible		
comb.	299.25 tons	(95%)
metal	2.25 tons	(1%)
glass	2 tons	(1%)
other	10 tons	(3%)
	313.5 tons	
	p = 485 lb/yd^3	
	v = 1292 yd^3	

The above densities are difficult to estimate. The size reduction process will tend to decrease the density of most materials and increase the densities of others. (In particular, the size reduction process will tend to increase the density of the combustible fraction.) A typical density range for shredded municipal waste has been given as 600 to 900 lb/yd^3 (Ref. 8). For this report, the densities of the individual components of the waste as given in Table C-5 are all assumed to be increased by a factor of 3. This results in a weighted density of 1038 lb/yd^3 for the total non-combustible fraction and 485 lb/yd^3 for the combustible fraction. The daily volume can be obtained from these densities.

Incineration of the combustible fraction, which is estimated to be about 63% of the total input waste, results in effluent and solid waste streams similar to those discussed above for the reference incinerator. For this report, the total effluent particulate release is assumed to be 0.63 x 10 = 6.3 lb of particulates per ton of waste delivered to the facility. Similarly, flyash production is assumed to total 0.63 x 25 = 15.75 lb of flyash per ton of waste delivered to the incinerator. Residue generation is again estimated based upon information listed in Table C-5. This is calculated to be about 22.7 tons/day (dry). Again assuming that the flyash is added to the residue, this results in a total residue mass (dry) of

Flyash	3.9 tons
Residue	22.7 tons
	26.6 tons (dry)

As before, the residue is assumed to be quenched to a 50% water content upon removal from the incinerator, resulting in 53.2 tons of residue being trucked to disposal per day. Given an assumed volume reduction factor of 20 for the combustible material, this results in a total wet density and volume of about 1500 lb/yd^3 and 70.8 yd^3, respectively. The composition of the residue is given as follows:

Water	26.6 tons (50%)
Glass	2.2 tons (4%)
Metal	2.2 tons (4%)
Ash and other material	22.2 tons (42%)
	53.2 tons (wet)

This third module involves recovery of the recyclable material from the non-combustible fraction, which for this report is assumed to be metal and glass. Based on References 40 and 41, the overall efficiency of recovery is assumed to be 85% of the glass from the entire input waste and 90% of the metal. This results in three basic streams--a metal stream, a glass stream, and a discard stream--as summarized below:

Recovered Metal	
Tin cans	27 tons (67%)
Non-ferrous	4.5 tons (11%)
Ferrous	7 tons (22%)
	40.5 tons

$p = 747\ lb/yd^3$
$v = 108\ yd^3$

Recovered Glass
34 tons
$p = 980\ lb/yd^3$
$v = 69\ yd^3$

Discarded Material	
Comb.	15.75 tons (14%)
Metal	2.25 tons (2%)
Glass	4 tons (4%)
Other	90 tons (80%)
	112 tons

$p = 1410\ lb/yd^3$
$v = 159\ yd^3$

Personnel. Additional personnel requirements for a 500 tons/day incinerator with optional size reduction, separations, and materials recovery modules are somewhat difficult to project. These personnel requirements will vary depending upon the design and throughput of the incinerator as well as the sorting modules. From a survey (Ref. 9) of seven existing refactory wall furnaces, which were all constructed in the 1960's (and so were designed in the 1950's) and which incorporated no waste sorting or materials recovery provisions,* the personnel requirements were determined to range from 0.36 to 0.74 man-hr/ton (0.47 man-hr/ton average).

More modern facilities would be expected to be designed to be less labor intensive. Table C-6 lists five modern facilities at which energy and materials recovery are either carried out or are projected. The first three units are incinerators while the last two units produce a refuse-derived fuel. (See Appendix B for more details of typical materials and energy recovery processes.) The Chicago and Saugus facilities are operating while the other three facilities have been designed but have not been constructed. As can be seen, reduced personnel requirements are projected despite the fact that the facilities practice some materials recovery as well as energy recovery.

In determining personnel requirements for the size reduction and materials recovery options, two alternatives are thus presented. One alternative would be to characterize a modern facility designed from scratch for materials and energy recovery, while the second option would be to assume that size-reduction, separations, and materials recovery operations are added on to an

*An exception was Incinerator E, which recovered some ferrous metals.

000339

Table C-6. Personnel Requirments for Some Modern Energy and Materials Recovery Systems

Unit	Capacity (tons/day)	Personnel (man-hrs/ton)	Description
Chicago Northwest Inc. (Ref. 8)	1600	0.31	Operating waterwall boiler, no waste size reduction. Steam produced for use within plant and as outside process heat. Tin can recovery from residue.
CPU-400 (Ref. 8)	400	0.32	Prototype unit. Shredders, air-classifiers, recovery of metals and low grade glass mixture. Electricity generated by gas turbine.
Saugus, Mass Inc. (Refs. 13, 14)	1500	0.29	Operating waterwall boiler, no waste size reduction. Heat recovery for steam production and sale to utility. Recovery of ferrous metals.
Kinney/Black-Clawson fuel recovery process (Ref. 15)	1000	0.14	Prototype hydropulping unit for refuse-derived fuel recovery. Hydropulping, recovery of ferrous metals. Recovery of low-grade glass, non-ferrous metals, stones, etc. for asphaltic concrete aggregate.
Garrett pyrolysis system (Ref. 15)	500 1000 2000	0.42 0.32 0.21	Prototype pyrolysis systems for refuse-derived fuel recovery. Shredders, air-classifiers, recovery of ferrous metals and glass.

existing facility. The former alternative will be the general situation over time, while there is something of a current incentive for the latter alternative. That is, there are over 300 existing municipal incinerators and most of these incinerators have difficulty meeting effluent standards. Since materials size-reduction and separations operations improve combustion efficiency, and since materials recovery will help to recover costs associated with the additional pretreatment steps, there will be an incentive for existing facilities to install such pretreatment and recovery equipment. In any case, it will take time for the more modern units to replace the older units.

Thus, the more conservative approach is taken and it is assumed that size reduction, separations, and materials recovery operations are added on to an existing facility. Some estimate of the possible man-power requirements can be obtained from Reference 15, which provides a description of the St. Louis Fuel Recovery System. In this case, municipal waste is shredded in a hammermill and the combustible fraction separated from the non-combustible fraction using an air classifier. The combustible fraction is trucked to an existing coal-burning electrical power plant located 18 miles away, where the combustible fraction of the municipal waste is used as a supplementary refuse-derived fuel (RDF). The RDF is stored in a large storage bin at the power plant and piped pneumatically to one of the boilers for combustion. Ferrous metals are recovered from the non-combustible fraction while the discards from the recovery process are landfilled (Ref. 15).

Personnel requirements for this 650 tons/day highly-automated demonstration facility have consisted of seven full-time personnel (two front-end loader operators, one control room operator, one yard man, two truck drivers, and one supervisor). In addition, one welder and two welder helpers are employed on an as-needed basis for hammer retipping. Finally, one operator is required for each power plant shift to maintain a storage bin for the recovered refuse derived fuel. Currently operations are limited to one shift per day.

Based upon the above, and an assessment of the designs of existing materials recovery systems in comparison with standard incineration operations, the following projections of personnel requirements are made for the size reduction module:

Size Reduction Module

Occupations	No. of persons	Dust Environment	Proximity
Hammermill Op.	1	Mod.	Mod.
Storage Bin Attendant	1	Mod.	Mod.
General Labor	1	Mod.	Close

The following projections of personnel requirements are made for the separations module:

000341

Separations Module

Occupations	No. of persons	Dust Environment	Proximity
Hammermill Op.	1	Mod.	Mod.
Air Class Op.	1	Mod.	Mod.
Materials Handler	1	High	Close
Storage Bin Attendant	1	Mod.	Mod.
General Labor	1	Mod.	Close
Total:	5		

The following personnel projections are made for the materials recovery module, in addition to the personnel projections made for the separations module:

Materials Recovery Module

Occupations	No. of persons	Dust Environment	Proximity
Ferrous Metal Recovery	1	Mod.	Mod.
Heavy Media Sep. Op.	1	Low	Mod.
Glass Sep.	1	Low	Mod.
Materials Handlers	1	High	Close
General Labor	1	Mod.	Close
Total:	5		

C.3.2 Solid Waste Disposal

The purpose of this section is to arrive at a set of reasonable assumptions and scenarios by which occupational exposures and operational offsite airborne releases may be determined for landfill disposal of de minimis radioactive waste. In this section, distinctions are made between exposures and releases associated with a "sanitary landfill," and those associated with an "open dump." Some of the distinctions between these two types of facilities which would lead to source variations include the following:

Sanitary Landfill	Open Dump
Daily cover	No daily cover
No open burning	Open burning part of time

Other site variations, such as the larger groundwater impacts that would be associated with an open dump are dealt with elsewhere (e.g., see Section C.5).

Waste characteristics (e.g., whether the waste exists as a combustible, metal/glass, or other material, or whether the waste consists of dirt or ash) also will impact the source term as discussed below.

C.3.2.1 Overview of Operations

This section provides a background of facility operations and presents some basic assumptions based upon past experience.

Sanitary Landfill. Existing landfills are quite variable in size, and can range from less than an acre to several hundred acres. One reference states, however, that most facilities cover 10 acres or less (Ref. 16). Another reference estimates that as of about 1976, there were about 18,500 sites covering a total of 500,000 acres, which results in a mean surface area of about 27 acres per site (Ref. 17). In this work, the reference sanitary landfill size is assumed to be 25 acres, which is relatively small and consistent with the size of the reference landfill in Reference 18.

There are three principal variations in sanitary landfill operations as shown in Figures C.5 through C.7. These include the trench method, the area method, and the ramp method. Each of these similar methods is discussed below, although a given site may use more then one method depending upon site and waste characteristics (Ref. 8).

In the trench method, a long narrow excavation is made and the excavated soil is stockpiled. Waste is then deposited in generally a sloping manner at one end of the excavation and is then compacted while being covered with a layer of soil. If the waste is not covered with soil during the initial emplacement/compaction process, a compacted soil layer is emplaced at the end of the day. The trench method is most suitable for sites where the groundwater table is at a significant depth, where there is a sufficient layer of cover soil, and where the site topography is regular.

The area method involves dumping refuse on the undisturbed existing ground surface. (The top soil is occasionally removed and stockpiled for the final soil cover.) After the refuse has been dumped, it is spread over the ground surface in a reasonably uniform layer and then compacted. The compacted layer of refuse and dirt is covered with soil either at the end of the day or when the deposition area is filled. This method is commonly used when the groundwater table lies near the surface, where the site topography is irregular, and where the cover soil must be obtained from off-site sources.

The ramp method, or progressive slope method, is a combination of the trench and area methods. A small excavation is first made in front of the exposed face of an existing slope, and the excavated soil stockpiled. Refuse is dumped on the exposed slope, compacted, and covered with compacted soil. This process is repeated at the faces of the newly created slopes so that a succession of slopes are produced across the landfill site.

By whatever method, the deposited waste is compacted and covered with a layer of soil--at least at the end of the day but often more frequently. The result is a series of cells in which the refuse/soil mixture is completely surrounded by a layer of soil. After the landfill is filled a final cover is emplaced

000343

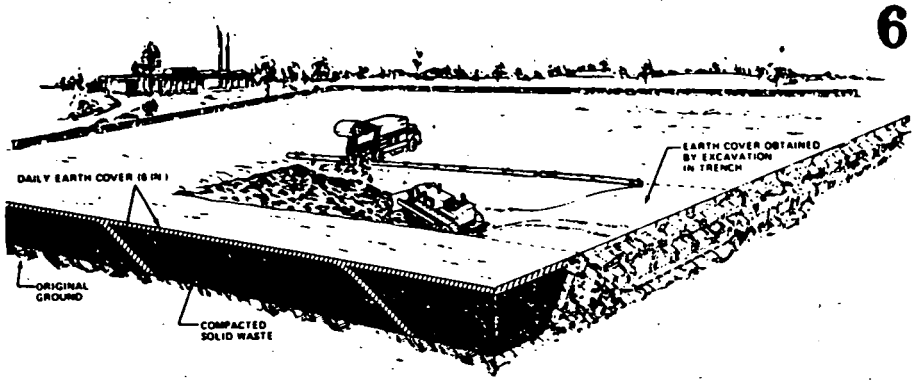

Figure C.5 Trench Method of Sanitary Landfill

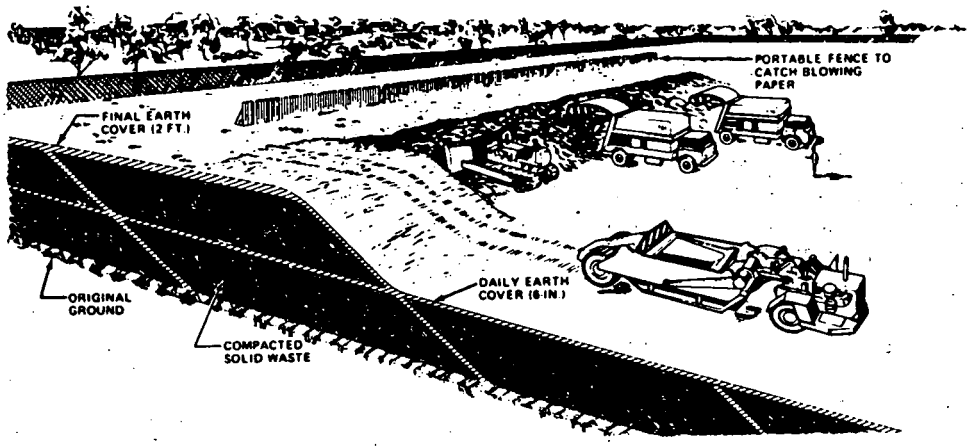

Figure C.6 Area Method of Sanitary Landfill

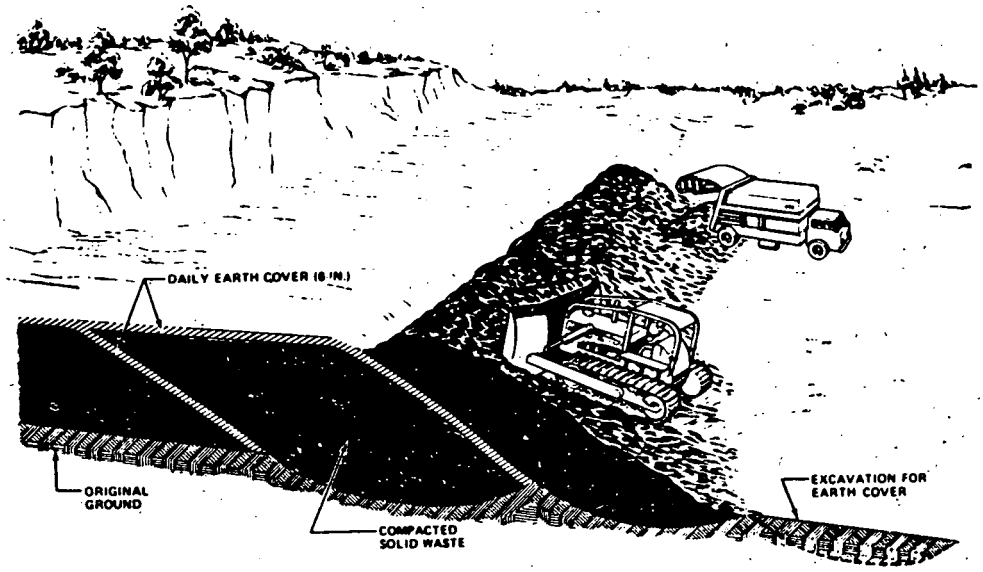

Figure C.7 Ramp Method of Sanitary Landfill

and compacted. EPA draft guidelines suggest that the daily cover soil should be a minimum 6 inches (15 cm) thick, and that cells which will not have additional waste placed on them for 3 months or more should be covered with soil a minimum 6 inches (15 cm) thick. Cells which will not have additional waste placed on them for 3 months or more should be covered with a minimum of 12 inches (30 cm) of cover material. For the final cover, the guidelines suggest that the completed landfill be covered by at least 6 inches (15 cm) of clay (or other low permeable materials) followed by at least 18 inches (45 cm) of additional soil to support a vegetation cover. Deeply rooted vegetation may require a greater depth of cover (Ref. 19).

The reference landfill in this report is assumed to consist of 24 ft (about 7 m) of waste/soil mixture topped by about a 2.5 ft cap (about 0.75 m). This depth is consistent with the assumptions in Reference 18 and can be achieved by excavating into the ground or building up the ground surface. The waste/soil mixture is assumed to consist of three 7 ft high waste cells separated vertically by 1 ft soil thicknesses. This is in accordance with the draft EPA guidelines given above, where it is assumed that a single layer of cells is completed before moving on to the next layer. Cells are separated horizontally by a sloping 6 inch soil layer as shown in Figure C.8. The 7 ft cell height is 1 ft less than 8 ft; and 8 ft is about the maximum cell height that can generally be conveniently accommodated (Ref. 8).

Figure C.8 also illustrates a leachate collection system and liner. These features are included mainly for completeness, since depending upon the design, operation, or environmental setting of the facility a leachate collection system and liner may or may not be incorporated.

As a rule of thumb, waste thus disposed in disposal cells is mixed with dirt and daily cover material at about a ratio of four parts waste to one part soil. This results in the following total volume of waste deposited in the site as disposed and compacted (which is different from the volume arriving at the site):

$$\text{Total comp. waste vol.} = (25 \text{ acres})\ (4.356\text{E}+4 \text{ ft}^2/\text{acre})\ (24 \text{ ft})\ (0.8)$$

$$= 20{,}908{,}800 \text{ ft}^3\ (774{,}400 \text{ yd}^3)$$

Assuming that the landfill operates for 20 years and for 280 days out of the year (equivalent to 5 days a week plus part of a weekend, and allowing for closures due to weather conditions and holidays), this results in a daily volume of compacted waste equal to:

$$\text{Daily Volume} = 3734 \text{ ft}^3/\text{day}$$
$$= 138 \text{ yd}^3/\text{day}$$

For economical operations, landfills must compact waste to minimum densities on the order of 800-1000 lb/yd^3 (0.47-0.59 gm/cm^3) (Ref. 8). Given this density range, the daily mass of waste disposed would range from 55 to 69 tons/day.

000345

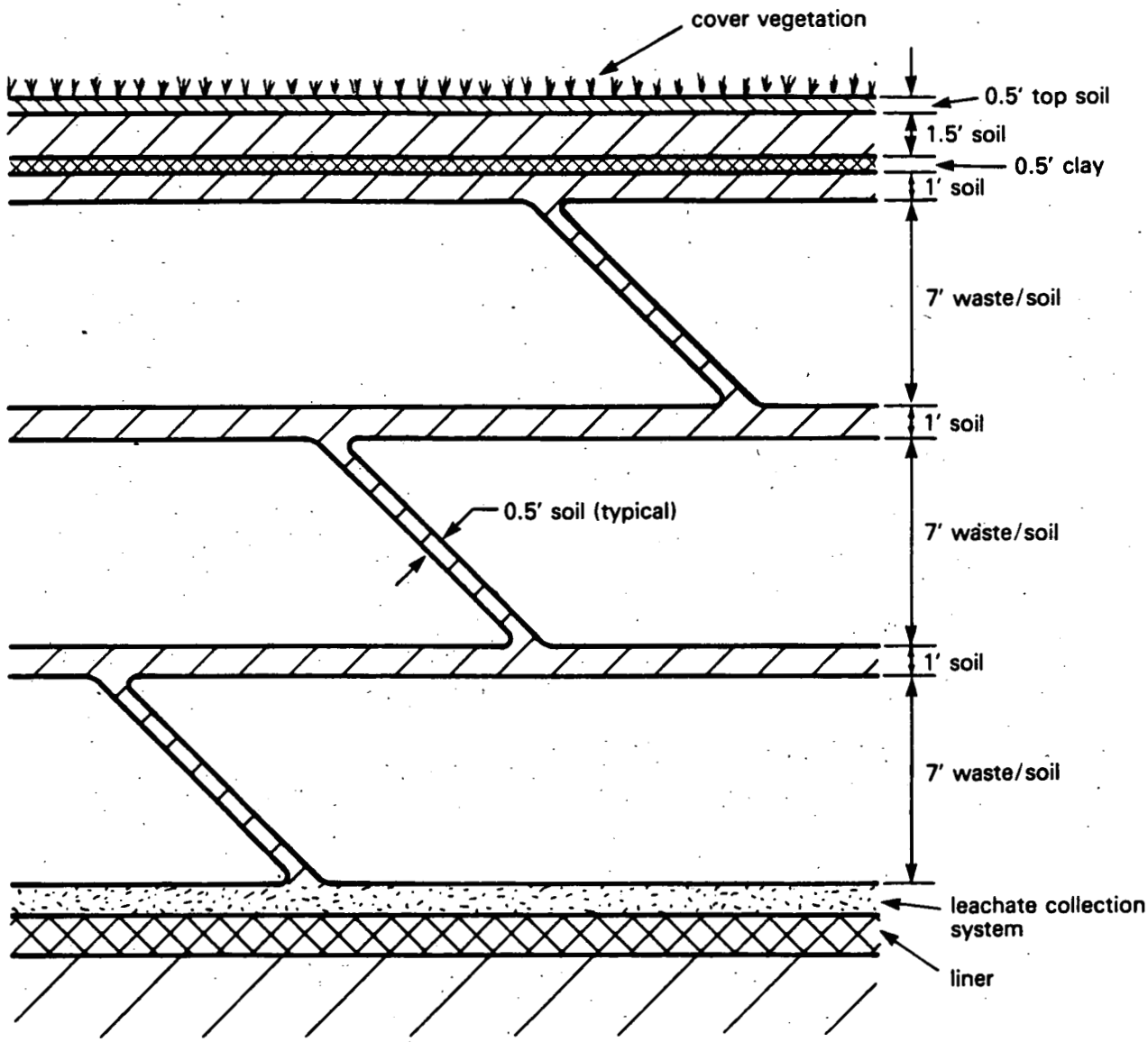

Figure C.8 Cross-Section of Reference Sanitary Landfill

The daily volume of waste actually received would be somewhat larger (Ref. 8). Waste arriving in compactor vehicles has a density of about 600 lb/yd^3 (0.36 gm/cm^2), while uncompacted waste in garbage cans has a density of about 250 lb/yd^3 (0.15 gm/cm^3). This would result in a daily as-received volume at the site ranging from 5030 ft^3/day (186 yd^3/day) to 14,930 ft^3/day (553 yd^3/day).

Open Dump. As the name implies, operation of an open dump is a much less organized process than operation of a sanitary landfill. Consequently, characterizing the open dump in terms of size and operation is more difficult than for a sanitary landfill. In any case, the reference open dump is assumed to cover 25 acres, which is the same size as the sanitary landfill, and like the sanitary landfill is assumed to be operated for 20 years prior to closure. This is a very conservative assumption, since current regulatory activities are upgrading landfilling practices and extensive future use of open dumps may be problematical.

The daily and annual volume and mass of waste disposed at the dump is difficult to project. Unlike the sanitary landfill, the deposited waste is allowed to sit around for several days prior to being covered with dirt. In addition, open burning is practiced. This means that a cross-sectional view of the completed dump would reveal a more helter-skelter mixture of waste and soil rather than the more regular series of cells that would characterize the sanitary landfill. The practice of open burning would reduce the volume of the deposited waste. The degree of volume reduction, however, would probably not be terribly high. At a typical municipal incinerator the volume reduction factor is typically less than 10, and the efficiency of waste combustion at the dump would be expected to be considerably lower. In addition, the less organized nature of the operation would imply that the degree of waste compaction achieved during waste emplacement would not be as high as at a properly operated sanitary landfill. Given this--the somewhat increased volume reduction due to waste burning being balanced by the expected decrease in waste/soil compaction--the average volume and mass of waste disposed at the dump is assumed to be roughly the same as at the sanitary landfill.

After the dump is filled, the dump is assumed to be covered with a layer of rather indifferently compacted soil. The planting of a layer of cover vegetation is also assumed to be performed in a rather indifferent manner. The thickness of soil covering the top portion of the waste is assumed to be the same as the sanitary landfill--i.e., about 0.3 meter (1 ft). However, unlike the sanitary landfill, there is assumed to be no low permeability layer within the cover. Also different from the sanitary landfill, less care is taken to compact and grade the waste and final cover.

C.3.2.2 Personnel Requirements

Sanitary Landfill. Personnel requirements for the reference sanitary landfill are somewhat difficult to project, and are estimated based upon consideration of a number of sources (Refs. 8, 19, 20, 21, 22).

Reference 8 observes that occupations associated with operation of a sanitary landfill can be separated into two groups: administration and operation. The types of activities associated with each group are as follows:

000347

Types of Activities at Sanitary Landfill

Administration	Operation
Management	Weighing
Accounting	Operating equipment
Billing	o spreading
Engineering	o compacting
Typing	o excavating
Filing	o hauling
	o road maintenance
	o dust control
	Maintaining equipment
	Traffic control
	Vector control
	Litter control
	Site security

At most municipalities, administrative functions will probably be part of a governmental or contractual organization and will be removed from the sanitary landfill site.

As far as operations are concerned, Reference 8 provides a rule of thumb for labor requirements. This rule is that "4 to 6 laborers are involved in the deposition of 1000 yd^3 of refuse per day." This includes the foreman, equipment operators, gatemen, and so forth, but does not include administrative personnel. An uncertainty is whether this refers to waste as-disposed and compacted or waste as-received at the site.

Reference 20 provides a table of estimated landfill site personnel requirements as a function of daily waste tonnage, based upon Los Angeles County Sanitation Districts. This table is reproduced below:

	Tons/day			
Classification	200	500	1,000	4,000
Equipment operator	1	2	4	12
Laborer	0	0	1	2
Weighmaster	1	1	1	3
Foreman	0	0	1	1

Reference 20 also provides a summary of the projected labor (and cost) requirements for two proposed sites in the Des Moines, Iowa Metropolitan area. These two sites cover 522 acres, and the personnel required are:

Occupation	Personnel
Equipment operators	7-8
Laborers	8
Foremen	2
Gate keepers/fee collectors	4
	21-22

From the above data, it can be seen that the personnel requirements at the reference 25-acre sanitary landfill are on the order of a single worker. This produces some slight difficulties. One can either greatly increase the size of the reference landfill or determine the personnel requirements for a large landfill and ratio these requirements to the reference 25-acre landfill. This is the same as saying that the single worker has a number of jobs at the landfill, and what one is essentially doing is determining what fraction of the time the worker is spending at each job. The latter approach is adopted in this report.

At any rate, assuming an ersatz 250-acre site, the personnel requirements are estimated as follows:

Occupation	No. of Personnel
Foreman	1
Equipment operator	3
Laborer	4
Gate keeper/fee collector/ weigher/traffic control	2
	10

Open Dump. Personnel requirements for the open dump would be expected to be reduced as compared with the sanitary landfill. This is because the operators of the dump would be expected to cut corners where possible, and getting by with a less than optimal number of workers is one way of doing so. There is, however, no obvious rule-of-thumb by which to determine the degree to which corners will be cut. The sanitary landfill was assumed to require 10 men for a 250-acre site. If a 250-acre open dump is assumed to be 20% less efficient in operation, this would mean that the open dump would require only 8 men.

The open dump is therefore assumed to require two fewer personnel than the sanitary landfill. The personnel occupations are similar. Differences consist of one equipment operator and one laborer being deleted. The open dump occupations are listed below:

Occupation	No. of Personnel
Foreman	1
Equipment Operator	2
Laborer	3
Gate Keeper/fee collector/ weigher/traffic control	2
	8

C.3.2.3 Assumptions for Personnel Exposures

Sanitary Landfill. As in the case of the incinerator, it is convenient to determine exposures by estimating the average proximity of the worker to radiation sources as well as the dust environment that he works in. The former relationship would be used to estimate exposures due to direct gamma radiation. The latter relationship would be used to estimate inhalation and immersion exposures. The radiological content of the dust environment would be a function of the dilution of the de minimis waste with the non-radioactive waste and the tendency for the de minimis waste to disperse into respirable particles. (This tendency could be estimated as follows: activated metal << contaminated metal/glass < combustibles < ash; where ash would be about the same as dirt.)

At any rate, when waste arrives at the landfill in trucks, the trucks are first weighed and a fee determined. The trucks are then directed to the open working face of the landfill, where the waste is dumped. The trucks then leave the site. The dumped waste is spread and compacted with construction equipment, and in the process the waste is mixed with and partially covered by non-contaminated soil. The waste is totally covered by a layer of dirt at the end of each working day at least 6 inches thick. Older sections of the landfill are covered by a thickness of dirt at least 1 ft thick. Temporary snow fences are placed around the open face to catch wind scattered paper and other lightweight materials.

This means that there are two major sources of radiation exposure to site personnel: (1) the open working face would be a source of direct gamma radiation plus contaminated airborne dust, and (2) disposed waste would be a source of direct gamma radiation as attenuated through 6 to 12 inches of soil. Much more minor sources of personnel exposure would be from direct gamma radiation from radionuclides deposited on the ground surface after being blown from the open face, as well as immersion and inhalation exposures from resuspension of the deposited radionuclides. In addition, the trucks would be a source of direct gamma radiation. These latter subpathways would be very minor compared to the above three major pathways, but are believed to be effectively considered in any case as part of the exposure calculations.

The open working face will be a source of direct gamma radiation as well as a source of airborne dust. To calculate impacts due to direct gamma radiation, the geometry of the open working face must be considered as well as the worker's relationship to the working face. Waste is deposited and compacted into a series of rhomboid- or lozenge-shaped disposal cells resembling a slanting parallelogram in a side view. Exposures from direct gamma radiation can be modeled to various personnel as a slab source of infinite depth but finite dimensions, and considering each workers proximate location to the source. Equipment operators would have the largest exposures, since they would be involved in crushing and spreading the waste, and would thus be located directly above the deposited waste--i.e., an effective distance on the order of 1 meter. Other site workers would be located at greater distances.

The geometry of the deposited waste may be illustrated by the following sketch:

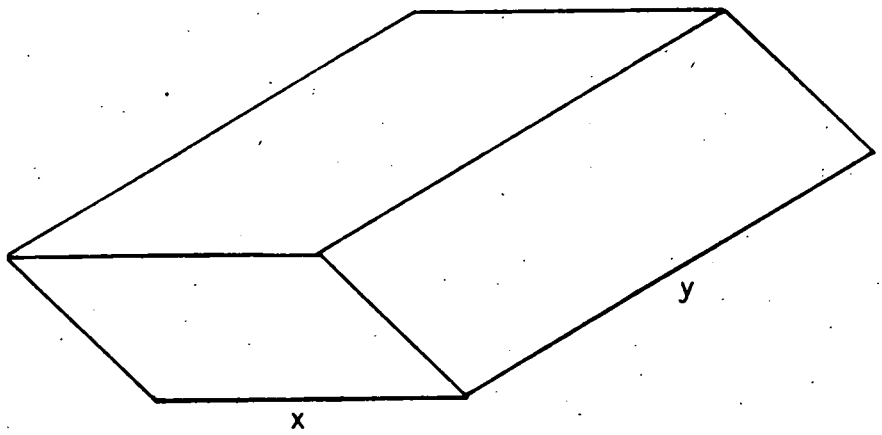

Assuming a cell height of about 7 ft, and a total compacted waste volume equal to 3734 ft^3 for a 25-acre site, this leaves (xy) dimensions equal to 933.4 ft^2. If x is assumed to be equal to y, x = y = 23.1 ft.

If equipment operators spend all their time above the waste surface, the total effective surface area of the open working face would be approximately equal to $(23.1)^2 + 9.9 \times 23.1 = 762\ ft^2$. For other site workers, the radioactive source can be envisioned by a wall 7 ft high and 23.1 ft long, and having a surface area equal to 162 ft^2.

Impacts due to airborne dust are approximated by assuming that each worker spends his time in a particular average dust environment in a similar manner as workers at the municipal waste incinerator. Equipment operators would spend the working day in the highest dust environment while gate keepers/ traffic controllers would be subjected to the lowest dust environment.

Direct radiation exposures from disposed waste as attenuated through a soil cover would be applied equally to all personnel.

The proximity relationships and dust environments are assumed to be as follows:

Occupation	Number	Proximity to working face	Ave. dust environment
Foreman*	1	mod.	mod.
Equip. Op.	3	close	high
Laborer	4	mod.	mod.
Gate/traffic	2	far	low

*Foremen at construction and other jobs tend to be jack-of-all-trades; that is, the foreman would be expected to spend his working day performing each of the other jobs for a given fraction of the day.

000351

The reference distances and dust environments assumed for each descriptor are as follows:

Occupation	Number	Proximity to working face (m)	Ave. dust environment ($\mu g/m^3$)
Foreman	1	30	200
Equip. Op.	3	1	400
Laborer	4	30	200
Gate/traffic	2	50	100

Open Dump. Occupational exposures at the open dump would be expected to be related to two major sources plus some minor sources. The two major sources include: (1) direct gamma radiation and inhalation of suspended dust originating from the working face of the dump; and (2) direct gamma exposures from the disposed and covered waste as attenuated through a layer of soil. The first set of exposures would include waste material that has been dumped in addition to ashes and other residues resulting from waste burning. For the second set of exposures, the degree of shielding provided by the covering soil could possibly be less than that at the sanitary landfill.

The minor sources of radiation exposures would be generally similar to those for the sanitary landfill. These include direct gamma radiation from waste delivery trucks, direct gamma exposures from covered waste soil surfaces contaminated from deposited dust particles arising from the open areas of the dump, and resuspension of the deposited dust particles. Contamination of covered surfaces would probably be more significant than at a sanitary landfill. These subpathways, however, would still be much less significant in terms of operational exposures than the three major sources discussed above.

Calculation of radiological impacts to the open dump site workers requires a number of assumptions regarding waste handling practices, particularly regarding the procedures used for waste burning. For this report it is assumed that as waste trucks arrive at the site, they are checked into the site and fees are assessed in a similar manner as the sanitary landfill. However, as waste is dumped at the working site, the waste is pushed by earth moving equipment into piles. As part of this process, some mixing with site soil occurs. However, the waste is not completely covered with a layer of soil at the end of the day as called for in the draft EPA guidelines on landfill disposal. Rather, the waste is left uncovered. It is set on fire during the late afternoon prior to the site workers leaving for the day, and is left to smolder and burn all night. The next day, the ashes are pushed around with construction equipment and the process is repeated throughout the working week. The following Monday, the burned waste is assumed to be more or less covered with soil by site personnel and the process of waste receipt, piling, and burning is repeated.

This is obviously only one way in which the open dump could be operated, but it is believed to be reasonable given the likely nature of the open burning operation. It will undoubtedly be a fairly obnoxious process, and probably the fewer people involved, the better. In any case, it is by definition not a totally controllable process, and it is unlikely that disposal site operators will want to carry out waste burning with waste delivery vehicles in the immediate area. This is for obvious safety as well as liability reasons.

This means that personnel exposures will be calculated in a similar manner as the sanitary landfill, but with a few minor differences. Direct gamma radiation to site workers would be calculated in a similar manner as previously, except that the areas of the working face that would contribute to worker exposure would be larger. If a similar waste geometry as that for the sanitary landfill can be assumed, then the average surface area to which the equipment operators would be exposed would be an average of the area associated with 5 days' waste delivery. For a 25-acre site, this would be equal to 15/5 x (762) = 2286 ft^2. For other site workers, the surface area for exposure would be approximately 15/5 (161.7) = 485 ft^2.

Impacts due to airborne dust would be calculated similarly to the sanitary landfill, except that a somewhat higher dust level may be assumed for each site worker. This is because in an effort to cut corners regarding disposal site operational costs, the operators of the open dump could be expected to spend less time with dust control measures (e.g., sprinkling). Another consideration is that the waste burning operation will alter the dispersability characteristics of the burned waste. Given the inefficient nature of the waste burning operation, and giving some fluctuations in the waste burning operation, about half (or less) of the week's pile of waste can be assumed to be burned. This will increase the ash content of the site soil and also result in a higher dust environment for the workers. Direct radiation exposures from disposed waste as attenuated through a layer of soil would be calculated similarly to before, except that a thinner soil cover may be assumed.

000353

The assumed proximity factors and average dust environments for the reference open dump are as follows:

Occupation	Number	Proximity to Working Face	Ave. Dust Environment
Foreman	1	mod	mod*
Equip. Op.	2	close	high*
Laborer	3	mod	mod*
Gate/traf.	2	far	low*
Total:	8		

*These values are all assumed to be somewhat higher than corresponding relative dust levels in a sanitary landfill.

The corresponding reference distances and dust environments are assumed to be:

Occupation	Number	Proximity to Working Face (m)	Ave. Dust Environment ($\mu g/m^3$)
Foreman	1	30	250
Equip. Op.	2	1	500
Laborer	3	30	250
Gate/traf.	2	50	150

C.4 OFF-SITE TREATMENT AND DISPOSAL OF HAZARDOUS WASTE

This chapter addresses reference facilities used for treatment and disposal of hazardous waste, with emphasis on those aspects of the treatment/disposal facilities which are most significant for determining radiological impacts of disposal of selected low activity low-level waste streams by less restrictive means. This chapter is divided into two sections: Section C.4.1 addresses a reference hazardous waste incineration facility, while Section C.4.2 addresses a reference hazardous waste disposal facility (or HWF), which is assumed to be a landfilling operation. Each section begins with an introductory background subsection.

C.4.1 Hazardous Waste Incineration

Background

There may be a number of methods by which hazardous waste may be treated to reduce its hazardous potential. As discussed in Appendix A, however, incineration is believed to be the treatment method which is generally the most applicable to de minimis waste which is hazardous due to its chemical or physical characteristics. In addition, it is believed that in almost all cases such treatment of de minimis waste will be carried out by a commercial service at a site removed from that of the waste generator. Thus, this section concentrates on typical types of incineration processes offered by commercial hazardous waste treatment/disposal firms.

The commercial hazardous waste incineration industry as of about 1980 is summarized in Table C-7 by EPA region (Ref. 23). As of 1980, there were 7 large high-temperature and 18 smaller units in operation in the United States. The estimated mass of incinerated waste totaled 398,000 wet metric tons (MT), which represented an average utilization of the maximum incineration capacity of about 59%. The maximum capacity was estimated by EPA assuming 75% operation on a 24 hours per day, 7 days a week, 365 days per year basis (Ref. 23). This estimate corresponds to an average maximum daily capacity across all 25 incinerators of about 98 wet MT/day (108 tons/day).

Table C-7. Commercial Hazardous Waste Incineration Industry as of 1980

EPA Region	No. of Facilities	Mass Incinerated (thousand wet MT)	Projected Max. Capacity (thousand wet MT)
I	3	23	23
II	1	26	33
III	1	48	131
IV	7	65	74
V	6	97	134
VI	6	98	230
VII	0	-	-
VIII	0	-	-
IX	1	40	45
X	0	-	-
	25	398	670

There are a number of different types of hazardous waste incineration systems currently in operation or under development. Some systems have proven to be more popular than others--e.g., rotary kilns, multiple hearth incinerators, fluidized bed incinerators, multiple chamber incinerators, or liquid injection incinerators (Ref. 24).

000355

Rotary kilns are adopted from lime processing equipment and involve use of a slowly rotating cylinder mounted at a slight incline to the horizontal. The waste is tumbled within the cylinder as it burns, and this tumbling action improves combustion efficiency. Rotary kilns are very versatile and are suitable for a broad range of wastes, including most organic wastes. Rotary kilns are well suited for incineration of solids and sludges, and can incinerate gases and liquids by injecting these materials into the burners using auxiliary nozzles. Combustion temperatures are in the range of 810-1650°C (1500-3000°F).

Multiple hearth incinerators operate using a series of vertically stacked hearths. Solid waste moves slowly through the drying and combustion zones in the furnace, while gases and liquids are fed into the furnace through side ports and nozzles. Multiple hearth incinerators are well suited for solids and sludges, and can also handle liquids and gases. While multiple hearth incinerators can accept most organic wastes, their current applications have largely consisted of sewage sludge incineration. Assuming incineration of sewage sludge, furnace temperatures are typically in the range of 320-540°C (600-1000°F) in the drying zone and 760-980°C (1400-1800°F) in the combustion zone.

Fluidized bed incinerators can handle organic wastes, and operate by injecting waste into a hot agitated bed of inert granular particles such as sand. Heat is transferred between the bed material and the waste during combustion. The agitation of the bed material promotes waste mixing and thus contributes to combustion. Fluidized beds are ideal for liquids, and can also handle solids and gases. However, solids are quite limited in terms of size, and so considerable pretreatment would be necessary to incinerate many solid waste forms (e.g., trash waste streams).

Multiple chamber incinerators often have application for general industrial waste refuse, particularly for relatively small scale use. Modular systems using multiple chamber designs are available in a range of sizes. In operation, waste is combusted on a grate or hearth in an ignition chamber. Gases, ash and pieces of unburned material passing out of the ignition chamber are further mixed and combusted in one or more secondary mixing and combustion chambers. Multiple chamber incinerators are generally limited to solid materials; sludges, powders, tars, and other wastes are generally not acceptable. Combustion temperatures are on the order of 540°C (1000°F).

Liquid injection incinerators have proven to be quite popular, and operate by injecting liquids or slurries into vertical or horizontal combustion chambers. Injected liquids are frequently atomized through nozzles to increase the rate of vaporization. Such incinerators are limited to pumpable liquids and slurries, and operate at combustion temperatures in the approximate range of 650-1650°C (1200-3000°F).

Reference Hazardous Waste Incinerator

The types of wastes which would be expected to be suitable for disposal by less restrictive means would generally be composed of solid materials such as miscellaneous trash. Therefore, the reference hazardous waste incinerator assumed for this report must be capable of handling solids. One of the

most versatile incinerator types is the rotary kiln, and is the reference incinerator design assumed. Five of the 25 operating hazardous waste incinerators are rotary kilns (Ref. 25). These incinerators can accept a wide variety of waste forms, including liquids, sludges, solids in bulk quantities, and solids delivered in drums and other packages. In addition, rotary kilns lend themselves to relatively large-scale operations. Finally, rotary kilns have been demonstrated (see Section C.3.1.1) to generate fairly high levels of airborne particulates during operation, which makes the selection of a rotary kiln as a reference incinerator conservative for purposes of determining impacts from airborne releases.

The reference rotary kiln hazardous waste incinerator is assumed to have a maximum waste capacity of 100 tons/day, and to operate at an average utilization of about 75%. This capacity is assumed based upon Table C-7 and Reference 23, and is conservative in terms of potential radiological impacts (e.g., the average utilization of hazardous waste incinerators in 1980 was about 59%.) A schematic of a typical rotary kiln operation is shown in Figure C.9 (Refs. 24, 26-28).

Waste delivered to the reference facility is generally temporarily stored prior to combustion, with different waste types segregated from one another. This is done for safety and also to control the composition of material fed to the incinerator. An assessment is made regarding incoming wastes as to the type of contained material, the flammability, hazard potential, and other characteristics pertinent to incinerator performance and operational safety. Waste is accepted in a solid, liquid, or semi-solid (sludge) form. In addition, waste may be accepted in a packaged form (e.g., as 55-gallon metal or fiber drums) or in a bulk form (e.g., as a liquid delivered in a tanker vehicle). A separate area is available for transfer of liquid waste from tanker vehicles into temporary storage tanks.

The mechanism of charging waste to the incinerator, as well as the rate at which the waste is charged, varies depending upon the nature of the waste. Bulk liquid waste is fed to the incinerator by means of a variety of possible nozzles and atomizers. Watery wastes are generally atomized into the combustion chamber, while flammable wastes are often fed through burner nozzles to aid in combustion and reduce the need for auxiliary fuel. Bulk solid waste such as contaminated trash is fed to a conveyor which conveys the waste to a charging hopper located above the furnace. Drummed waste may be emptied onto the conveyor, fed into the burner without being emptied, or sent through a shredder prior to feeding to the burner. In the last option, a mix of waste and waste package is fed into the burner, and this option is frequently used for waste delivered in fiber or other easily shredded packages. The first option can possibly be used as a means of reusing waste packages. The second option--that of sending drummed waste directly into the burner--is implemented for waste considered to be the most hazardous. This of course reduces the need for waste handling.

The kiln has dimensions on the order of 10 feet in diameter and 30 feet long, and spins at a rate of about a quarter of a revolution per minute. A typical operating temperature is about 815-870°C (1500-1600°F), and solid waste material is typically retained within the kiln on the order of a few hours. The retention time, however, can vary significantly depending upon the type of

000357

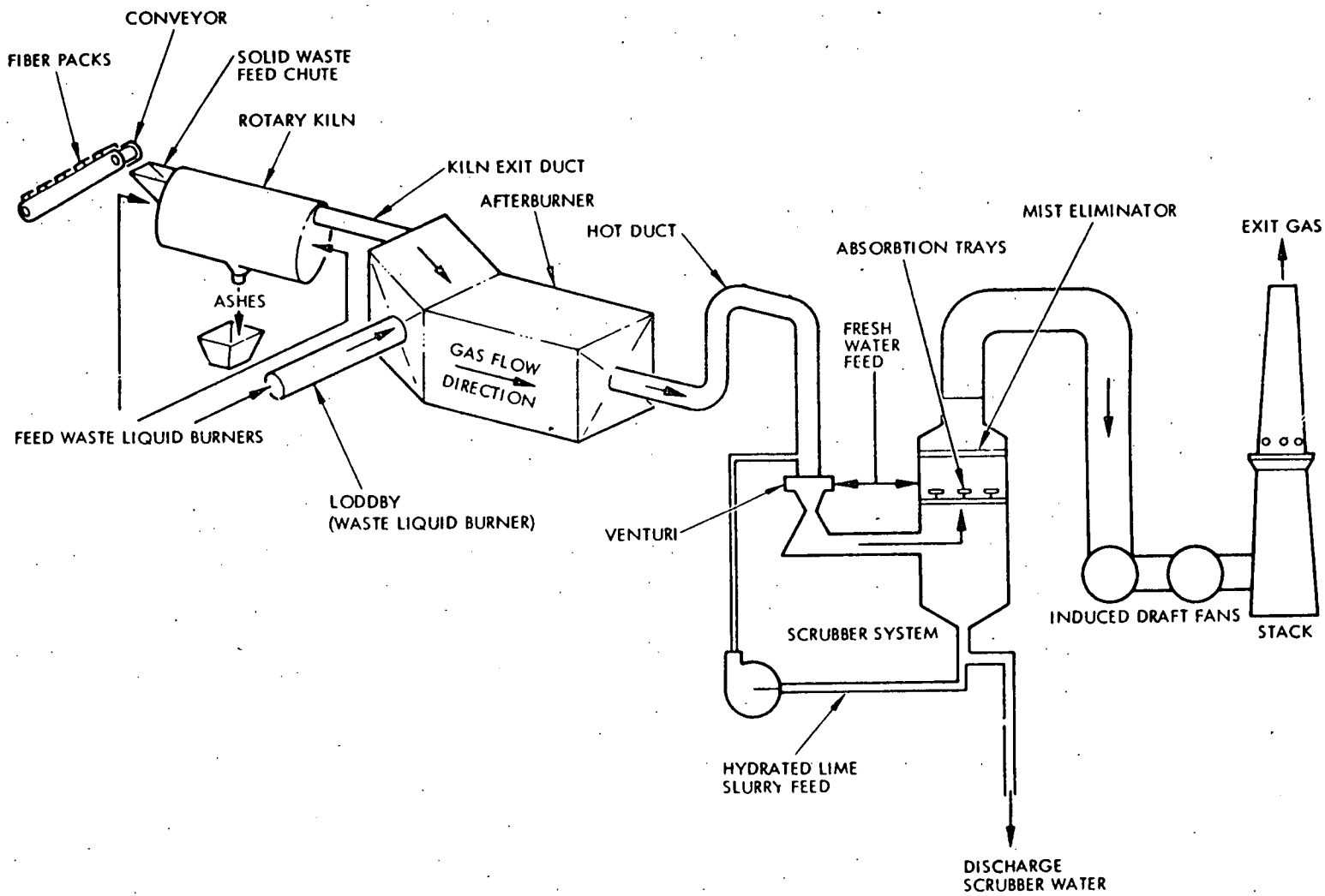

Figure C.9 Operation of a Typical Rotary Kiln Incinerator

000358

6400

waste and mode of incinerator operation. A residue discharge port is located at the lower end of the slanted kiln. This residue consists of ash, glass, metal, and other materials such as waste drums; the collected ash is quenched with water and loaded onto trucks for transport to an on-site landfill for disposal.

Combustion gases are retained in the kiln combustion area an average of 2 seconds, and after passing out of the kiln flow through a mixing chamber to a secondary combustion chamber. The secondary combustion chamber burns uncombusted gases and particulates from the kiln, and can be fired either by auxiliary fuel or combustible liquid waste. The secondary combustion chamber operates at a temperature range of about 980-1090°F (1800-2000°F). Gases from the secondary combustion chamber are quenched and sent through scrubbers and a demister prior to discharge through the plant stack. Waste liquids from the scrubber, demister, and ash handling system are generally acidic, and are neutralized prior to discharge to settling ponds where further treatment may be provided if necessary. Any flyash or other solid material collected in the effluent treatment system is combined with the residue and disposed.

Radiological Effluents

An estimate of the fraction of the incinerated waste radionuclides which are released into the air can be made using data from the previous two chapters as well as test data from existing rotary kiln hazardous waste incinerators. These tests were performed as part of an EPA program intended to evaluate the environmental, technical, and economic feasibility of disposing of industrial wastes. Test burns were conducted at existing commercial incinerators and with real-world industrial wastes. Particulate releases obtained from manipulating test data obtained at two existing rotary kiln hazardous waste incinerators are summarized in Table C-8 (Refs. 27, 28). As indicated, particulate releases vary depending upon the type of waste and the design of the incinerator and effluent treatment system. For the test burns involving PCB-containing capacitors, reduced effluents were observed when the waste was put through a shredding process. The data also indicated that for the tests involving PVC solid waste, particulate release from the furnace was about five times as large as the particulate release from the stacks.

These data were published in 1977, and considerable additional interest has been observed in the public and others for reducing emissions from hazardous waste and other incinerators. Given this, and also given the variability in the waste likely to be sent to hazardous waste incinerators as well as in the design of the incinerators themselves, there appears to be no good reason to assume any better or worse radiological releases than those for the reference pathological incinerator. For this report, then, the radionuclide release fractions for the reference hazardous waste incinerator are assumed to be the same as those discussed in Section C.2.1 for the reference pathological incinerator.

Material Flow

Material flow through the reference hazardous waste incinerator is more difficult to estimate than that for the reference municipal waste incinerator. This is due to the heterogeneous nature of the waste incinerated as well as the reduced level of information in the literature available to the authors as compared with municipal waste incineration.

000359

Table C-8. Particulate Emissions from Test Burns at Two Rotary Kilns

Incinerator Capacity (tons/day)	Effluent Treatment System	Waste Burned	Particulate Release mg/m³ air	Particulate Release lb/ton
125 (liquids, solids, and slurries)	Secondary combustion chambers, venturi scrubber, absorption trays, mist eliminator, 30 m (100 ft) stack	Hammermilled PCB-containing capacitors in fiber drums (330 kg/hr)	35	17.4[a]
		Whole PCB-containing capactors (360 kg/hr)	53	24.2[a]
		Nitrochlorobenezene liquid waste (404 l/hr)	14	4.1[a,b]
		Nitrochlorobenezene liquid waste (350 l/hr)	16	5.4[a,b]
48 (solids) 94,500 l/day (liquids)	Secondary combustion chamber, quench elbow, quench chamber, high energy venturi scrubber, demister, 61 m (200 ft) stack.	PVC solid waste particles in fuel oil (845 kg/hr)[e]	70.9[f]	8.7[c]
		PVC solid waste particles in fuel oil (845 kg/hr)[e]	71.4[f]	9.7[d]

[a]Estimated based upon a stack air flow rate of 1370 m³/min.
[b]Based on a specific gravity of 1.395 gm/ml.
[c]Estimated based upon a stack air flow rate of 30,600 ft³/min.
[d]Estimated based upon a stack air flow rate of 33,800 ft³/min.
[e]Fuel oil is added to support combustion.
[f]The particulate release from the furnace hot zone for these two tests were 357 mg/m³ and 378 mg/m³, respectively.

The volume reduction achieved by incineration will vary depending upon the specific characteristics of the waste--e.g., whether the waste is a solid or a liquid. Much of the waste incinerated at the hazardous waste incinerator will be in a liquid form, and the fraction of the waste incinerated at any given incinerator that is liquid will vary depending upon several factors such as the incinerator design and the manufacturing processes carried out by the incinerator customers. From Reference 43, however, it can be implied that about 60% of all the hazardous waste currently being incinerated is in a liquid form.

From Table C-1, an overall volume reduction factor of 100 can be postulated for liquids. The achievable volume reduction factor for solids will vary depending upon the characteristics of the waste. A reasonable volume reduction factor, however, would probably be in the range of 4 to 20, based upon experience with pathological and municipal waste incineration. Assuming an average solid waste volume reduction factor of about 10, this leads to an overall volume reduction factor for the reference hazardous waste incinerator equal to $1/(.6/100 + .4/10) = 21.7$. At an average input waste density of 1 gm/cm^3, this implies that the daily volume of waste delivered to the reference 100 tons/day incinerator is 91 m^3 (119 yd^3), and the average daily volume of residue discharged for disposal is 4 m^3 (5.5 yd^3).

The mass and density of the residue is difficult to estimate. In Appendix A, it was estimated, based in part on Reference 23, that hazardous waste incineration resulted in waste mass reduction by about a factor of 20. Assuming this value here, this results in a daily generated mass of residue equal to 5 tons (4.5 MT). The density of the residue is thus calculated to be 1830 lb/yd^3 (1.09 gm/cm^3).

Personnel Requirements

Operation of a hazardous waste incinerator is somewhat similar to a municipal solid waste incinerator, and so one would expect that the personnel requirements would be similar. There are some important differences, however. Unlike a municipal solid waste incinerator, the waste handled will be by definition hazardous. More attention must be paid to safety during waste receipt and handling. In addition, a much greater heterogeneous mixture is received at the hazardous waste incinerator, which means that more personnel hours are required to regulate waste flow into the facility and through the incinerator. Since operations would be conducted on a contract basis, administrative requirements could also be augmented. Compliance with EPA requirements would also require administrative personnel time.

It is apparent that personnel requirements depend upon factors such as the design of the incinerator, the throughput of waste through the incinerator, and the types of waste handled. Easily combustible wastes may be processed at a much faster rate than non-combustible wastes. Liquids also seem to be processed at faster rates than solid wastes.

One EPA estimate of incineration costs (Ref. 37) estimates personnel requirements for a 300 tons/day rotary kiln incinerator which operates at that throughput for 300 days out of the year. These personnel requirements consist of:

000361

Operators	3
Supervisors	2
Secretaries and crew	7
Administrators	1
Total:	13

Assuming each person works 2080 hrs/yr, this corresponds to a total work requirement of 0.30 man-hr per ton of waste (Ref. 37).

This estimate appears to be a bit low, however, when compared with the actual personnel requirements for the two existing operating facilities used to test burn hazardous waste as summarized in Table C-8. One 125 ton/day facility accepts waste from a number of outside sources, and employs a total of 42 persons. (Apparently, at least some of these are engaged in waste delivery or other activities which are not directly related to the operation of the incinerator.) Assuming each person works 2080 hrs/yr and the facility burns 125 tons/day of waste for 365 days/yr, this corresponds to personnel requirements of about 1.91 man-hrs/ton (Ref. 28).

Another facility is dedicated to incinerating waste generated by a particular industry and does not normally accept waste from outside sources. This facility requires 56 man-hrs/day to operate, and would therefore require 1.17 man-hrs/ton assuming incineration of solid waste at the maximum capacity for solid waste combustion (48 tons/day). At the maximum capacity of liquid waste combustion of 54,500 l/day and assuming a liquid waste density of 1 gm/cm^3, this corresponds to approximate man-hour requirements of 0.93 man-hr/ton.

In a previous section, it was estimated that it required approximately 0.36 to 0.74 man-hour to incinerate a ton of municipal waste, with an average of 0.47-0.48 man-hr/ton. Assuming that it requires twice the effort to incinerate a ton of hazardous waste, this would result in labor requirements of approximately 1 man-hr/ton. Assuming that each worker works 8 hours, the labor requirements for a 100 tons/day hazardous waste incinerator would be approximately 13 persons. A total of five administrative personnel are assumed to be employed to handle waste shipment scheduling and billing, site engineering, and regulatory matters. This corresponds to a total man-hour requirement of about 1.4 man-hours per ton of waste, which is within the man-hour range calculated above for the two existing facilities. Based upon experience with municipal waste incineration, these personnel are assumed to be distributed as follows:

Occupations	No. of persons
Manager	1
Assist. Manager (Foreman)	1
Secretary	1
Office Manager	1
Engineer	1
Billing/Accounting Personnel	1
Waste Shipment Schedulers	2
Occupational Health	2
Operators	2
Process Controllers	2
Residue Handlers	2
Maintenance/Labor	2
Total:	18

Radiological Implications to Personnel

As before, to approximate radiological impacts to incinerator operating personnel, it is necessary to estimate (1) the potential for workers to be exposed to direct radiation emitted from received waste, and (2) the potential for radioactive material to be dispersed into the air and inhaled or otherwise contacted by facility personnel.

This estimate is made in a similar manner as that for the municipal waste incinerator. Each person is assumed to be characterized by a given proximity factor and dust environment as follows.

Occupation	No. of persons	Dust Environment	Proximity Factor
Manager	1	low	mod
Assist. Manager	1	low	mod
Secretary	1	low	far
Office Manager	1	low	far
Engineer	1	low	far
Billing/Accounting Personnel	1	low	far
Waste Shipment Schedulers	2	low	far
Occupational Health	2	mod	mod
Operators	2	mod	close
Process Controllers	2	mod	mod
Residue Handlers	2	high	close
Maintenance/Labor	2	high	close
Total:	18		

Specific values for the different dust environments and proximity factors are assumed to be as follows:

000363

Dust Environment ($\mu g/m^3$)	
low	100
mod	200
high	400

Proximity Factor (m)	
far	30
mod	10
close	1

The dust environments assumed are believed to be very conservative, since the hazardous nature of the waste being handled requires much greater consideration (than at a municipal waste facility) given to worker safety and minimizing airborne releases. Dust control procedures would therefore be expected to be much more extensive.

C.4.2 Hazardous Waste Disposal

Over the last decade considerable interest has grown regarding the safe disposal of hazardous waste. As of about the 1977 time frame, EPA estimated that over 90% of the hazardous waste being generated was being handled by disposal practices which did not seem adequate to protect public health and the environment (Ref. 29). As a result of this concern, the Resource Conservation and Recovery Act (RCRA) was enacted in 1976 which called for a national program to control hazardous waste. All waste identified as hazardous in regulations issued under Subtitle C of RCRA are to be tracked by manifests from where they originate to their final disposition. The disposition of the waste--whether treatment, storage, or disposal--is regulated using permits issued by either the EPA or an authorized State. Regulations for carrying out Subtitle C of RCRA are set forth in 40 CFR Parts 260 to 266, 270, and 271.

Two types of hazardous waste disposal facilities are identified under the regulations:

> Facilities with interim status. These facilities were in existence at the time the interim status standards became effective (November 19, 1980). Although facility operators have notified EPA of their hazardous waste activities and have applied for permits, processing of their applications has not been completed. During this processing period, such operators must comply with Interim Status Standards as set forth in 40 CFR Part 265. These interim standards are intended to move operations of existing facilities toward RCRA's goal of protecting human health and the environment.
>
> Facilities having a permit issued by EPA or an authorized state. These facilities must comply with the General and Specific (Permit) Standards set forth in 40 CFR Part 264, which are intended to ensure accomplishment of RCRA's goals. All new facilities are covered by the Standards.

It is apparent that hazardous waste disposal is in a period of transition, and it will take time to modify past and current disposal practices. This is believed to be true despite the existence of comprehensive regulations, and especially for disposal facilities operated by a waste generator exclusively for that generator's waste. The authors believe that disposal practices will be much more quickly updated for disposal facilities operated commercially,

since these are much more visible and so generate more public interest. In addition, solid hazardous waste disposal is generally carried out in a series of excavated cells such as a series of disposal trenches. Waste disposed at a disposal facility after the effective date of the regulations (November 19, 1980) would probably be generally disposed in waste cells designed and constructed according to the new requirements; and as long as new waste cells are sited so that no interaction takes place with old waste disposal cells (required under the regulations), older, more unsatisfactory disposal practices would not affect the newer waste disposed.

Given the tighter disposal requirements as discussed above, coupled with public interest in safe waste disposal, there is considerably less justification for separating hazardous waste facilities into "good" and "poor" facilities than there was for separating municipal waste disposal facilities into "sanitary landfills" and "open dumps." This does not mean that there will not prove to be some disposal practices which are more environmentally adequate than others. This is expected since one's knowledge of hazardous waste characteristics and disposal dynamics will not stay stationary over time.

It does mean, however, that continuing use of blatantly poor disposal practices is not likely to occur at least at the commercial disposal facilities. This is due to (1) the presence of a uniform set of national hazardous waste shipment, treatment, and disposal standards, (2) the interest manifested in such publicly visible operations, and (3) the relatively small number of such facilities.

Given the above, the reference hazardous waste disposal facility is not separated into a "well operated" site and a "poorly operated" site as was the case for the reference municipal waste disposal facility. A consistent level of operations is assumed. However, some differences in groundwater and leachate accumulation impacts are assumed. This anticipates an improved data base on hazardous waste disposal being generated over time, and also reflects the variations in operations carried out by sites operating under the interim status standards.

Reference Hazardous Waste Facility (HWF)

The characteristics of the reference hazardous waste facility (HWF) are developed using a number of sources (Refs. 23, 25, 26, 29-35, 44). The reference HWF is meant to be a typical of landfill operations, but is not meant to be indicative of any one of the 44 facilities currently (June 1980) in operation.

Design. The reference HWF is assumed to be a landfilling operation and to have a total acreage committed to hazardous waste disposal of 150 acres, and have a maximum waste disposal capacity of 64.5 million ft^3. The overall size--150 acres--is in the range of some of the larger commercial hazardous waste disposal facilities, which tends to result in a conservative calculation of possible radiological impacts from de minimis waste disposal. The total disposal capacity corresponds to a density of 430,000 ft^3 of waste per acre, which is the value assumed in Reference 23.

000365

Disposal is assumed to be carried out in a series of excavated pits ("disposal cells"), and for the purposes of this appendix, 64 such disposal cells are assumed to be excavated and filled with waste over the operating life of the HWF. The figure 64 is somewhat arbitrary but it is believed to be reasonable given conflicting priorities. Obviously, too many such disposal cells would reduce disposal efficiency at the site, while too few could lead to water management problems. Assuming a 20-year operating life, 64 disposal cells correspond to construction of somewhat greater than 3 disposal cells per year, a number which can be conveniently handled by site workers. This also results in an average waste capacity of about 1,008,000 ft^3 per disposal cell.

The overall size of the disposal cell must be somewhat larger than the volume of waste disposed, since the waste emplacement efficiency (the percentage of the disposal cell used for waste disposal) will be less than unity. The waste emplacement efficiency at a given site will depend upon the form of the waste, whether or not the waste is packaged, and the disposal practices of the facility operator. Most packaged waste delivered to the disposal facility will be delivered in 55-gallon drums, and a waste emplacement efficiency of about 75% can be achieved assuming that the waste is neatly stacked. Bulk waste can probably achieve a somewhat higher waste emplacement efficiency. There is a need to separate different types of waste, however, especially incompatible waste streams, and placing earthen barriers between layers of waste and between different types of waste will reduce the overall waste emplacement efficiency of the disposal cell.

Assuming an average waste emplacement efficiency of 75% within the disposal cells, this results in a total excavated volume of about 1,340,000 ft^3 per disposal cell. This can be achieved by a disposal cell having an average depth of about 25 ft, and having overall surface dimensions of about 260 ft by 360 ft. This results in interior dimensions of about 110 ft by 210 ft along the bottom of the cell, given a 1:3 slope along the sides of the cell. This slope is necessary in order to install a disposal cell liner. Each disposal cell is assumed to be filled with wasted and other material to about 6 inches of the top of the cell. Disposal cells are assumed to be separated by a space equal to about 15 ft.

The layout of the disposal cells is illustrated in Figure C.10. The above assumptions result in a total disposal area having dimensions of about 2185 ft by 2985 ft. A buffer zone would surround the disposal area. The size of the buffer zone would vary depending upon site-specific conditions.

A more detailed look at the cross section of a typical waste disposal cell is depicted in Figure C.11. According to the regulations, the disposal cell must be designed to prevent the migration into the environment of hazardous constituents during the operating life of the facility plus a post-closure care period. The regulations further require that the disposal system consist, at a minimum, of a leachate collection and removal system and at least one liner.* The function of the leachate collection and removal system is to minimize the

*An owner/operator may be exempted from liner and leachate collection system requirements if he can demonstrate that alternative design and operating practices, together with the environmental characteristics of the disposal site, will prevent the migration of any hazardous constituents into the ground or surface water at any future time.

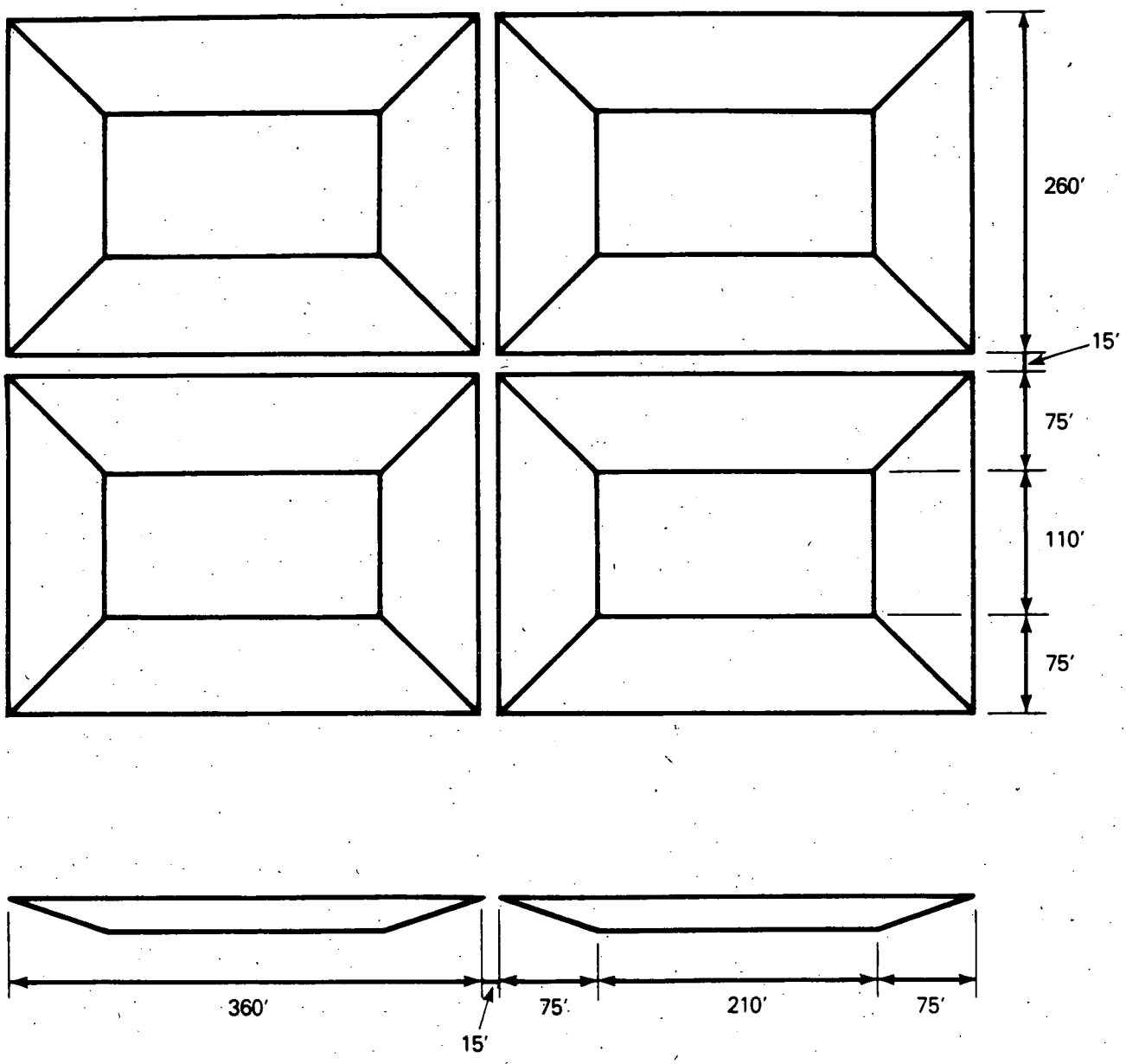

Figure C.10 Layout of Reference Hazardous Waste Facility

000367

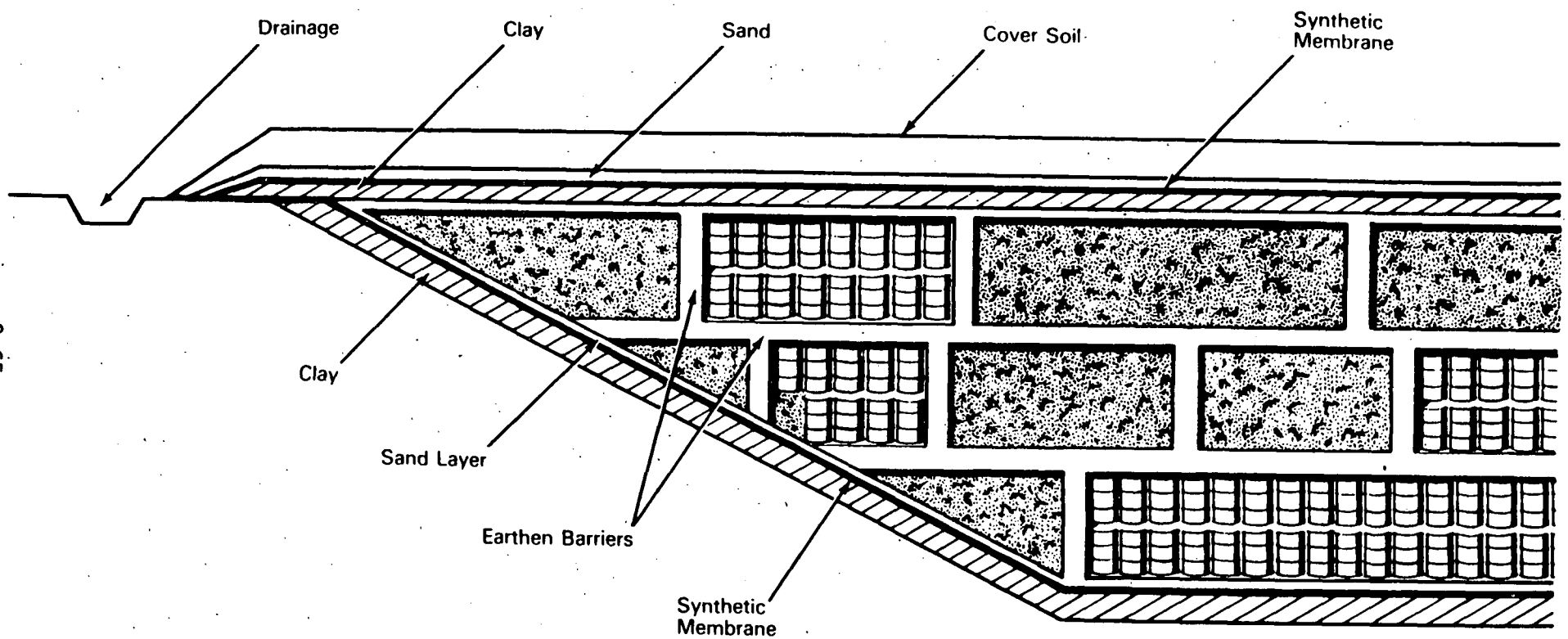

Figure C.11 Cross-Section of a Typical Hazardous Waste Disposal Cell

000368

6400

head (depth) of leachate on the liner. It must be capable of achieving a leachate head of one foot or less. The liner itself must be designed and constructed to prevent migration of liquids and must allow no more than negligibly small infiltration of liquids into the liner itself.

An EPA guidance document on meeting the requirements (Ref. 44) states that liner systems should be contructed wholly above the seasonal high water table (i.e., in the unsaturated soil). Landfill cells (i.e., units or discrete parts) should be designed with an underliner system consisting of (as a minimum) a leachate detection, collection, and removal system and a synthetic liner having a thickness of at least 30 mil. A secondary liner consisting of at least a compacted clay layer is recommended beneath the synthetic membrane. Where the final cover will not be applied to landfill cells for 30 or more years after first placement of wastes, the underliner system should consist (as a minmimum) of both primary and secondary leachate detection, collection, and removal systems; a primary synthetic liner; and a secondary soil liner (e.g., clay) Further information on EPA recommendations on landfill design, liner systems, and final cover is contained in Reference 44.

The particular liner design utilized is not significant for purposes of this appendix. The main function is to contain the hazardous waste at least through the operating life of the site plus a 30-year post-closure period. The leachate collection and removal system provides a mechanism to remove liquids that may accumulate within the disposal cell. This simply consists of sloping the floor of the disposal cell to one or more sumps, and liquids accumulated in the sump may be removed by a standpipe inserted in the sump (not shown in Figure C.11). A highly permeable layer (e.g., sand at least 12 in thick) covers the floor in the disposal cell to aid in movement of liquids toward the sumps. A graded granular or synthetic fabric filter is located above the drainage layer.

Completed disposal cells must be capped with a final cover designed to achieve the following (Ref. 33):

- minimize migration of liquids;
- function with minimum maintenance;
- promote drainage and minimize erosion of cover;
- accommodate settling and subsidence; and
- have a permeability equal to or less than that of the bottom liner.

EPA guidelines on designs for final covers (caps) state that the final covers should consist of (at a minimum) a vegetated top cover, a middle drainage layer, and a low permeability bottom layer (Ref. 44). For this appendix, and based on these minimum recommendations, the cover design is assumed to consist of 2-ft of compacted clay followed by a synthetic membrane at least 20 mil thick. This is followed by a 1 ft drainage layer composed of highly permeable material (sand), a synthetic fabric filer, and 2 ft of soil which is vegetated. This results in a thickness of about 5 ft of soil and other material covering the top of the waste. The cap is sloped slightly to promote runoff without erosion. Diversion ditches would also be constructed to facilitate removal of precipitation and to help preclude run-on of precipitation into disposal cells.

000369

Figure C.11 illustrates a basically below-grade landfill. Another design option which is also used is to construct the landfill so that it includes a significant above-grade component. This could result after filling and final grading in a large mound filled with waste.

Operation. Operation of the HWF is believed to be much more similar to a low-level radioactive waste disposal facility than to a sanitary landfill. This is because the toxic nature of the received waste necessitates much greater concern regarding proper waste identification and handling. References 31, 34, and 35 provide information on operation of typical existing hazardous waste disposal facilities.

Waste arriving at the HWF is checked in at the entrance to the facility. The bill of lading is checked and the contents of the waste delivery vehicles are checked for obvious discrepancies with the bill of lading, for possibly hazardous conditions, and compliance with Department of Transportation (DOT), EPA, and state requirements. A manifesting system is now required by EPA with the intent of providing tracking of hazardous waste from where it is generated, through possible treatment, and finally to ultimate disposal.

The waste contents are checked against data collected on previous waste shipments or similar waste types to help determine proper disposition and handling requirements. Samples may also be taken of the incoming waste and analyzed in an on-site laboratory. A waste disposition sheet is filled out for the shipment which describes the location for disposal within the landfill (e.g., any segregation requirements), the type of hazard the material represents, and any special precautions. After waste disposal, the location of the waste within the disposal cell is recorded for future reference. Frequently the applicable information regarding the waste shipment (e.g., waste type, chemical content, volume, mass, waste generator, disposal location, etc.) is recorded on a computer data management and recordkeeping system.

Waste accepted at the HWF may be packaged or may be disposed in a bulk form, but in any case it is important to ensure that incompatible waste materials do not come into contact with one another. Separation of waste materials may be accomplished as shown in Figure C.11 by construction of individual clay-lined cells. Vertical walls 18-in thick and 12-in thick floors and caps are typically used in constructing these cells. Other procedures for ensuring a compatible disposal environment include procedures such as surrounding drums of acidic wastes with a basic material such as lime.

The EPA regulations place restrictions on the liquid content of the waste (Ref. 33). Bulk or non-containerized liquid waste or waste containing free liquid may not be placed in the landfill unless one of two conditions is met: (1) the disposal unit has a liner and a leachate collection and removal system meeting the standards, or (2) before disposal, liquids are treated or stabilized so that free liquids are not present. Containers holding free liquids may not be placed into the disposal cells unless at least one of the following four conditions is met: (1) free-standing liquids are removed by decanting or are mixed with an absorbent or solidified, or otherwise eliminated, (2) the container is very small (e.g., an ampule), (3) the container is designed to hold free liquids for use other than storage (e.g., a battery), or (4) the container is a lab pack. In addition, EPA regulations require that containers must be at least 90% full when placed in the landfill. Empty containers must be reduced in volume by crushing or shredding.

Considerable emphasis in well managed sites is given to worker safety. Workers are equipped with coveralls, gloves, and other equipment, and emergency or special equipment (e.g., respirators, controlled air suits) are available if needed. Showers and eye wash stations are also provided. Procedures for proper waste handling are developed and practiced, and emergency procedures are drilled periodically. Routine "preventive maintenance" is also practiced, with inspections of site areas--e.g., disposal cells, fences, disposal practices--carried out on a weekly basis. Care is taken to minimize dispersion of particulate material, and periodic sampling and monitoring for contaminant migration is also carried out. Liquids recovered from disposal cells, either while the disposal cell is open or after it is closed, are treated and either released or combined with absorbents to form a sludge and disposed into a disposal cell.

The final closure of the site proceeds according to a specified plan.

Personnel Requirements

Personnel requirements for the reference HWF are estimated based upon information contained in References 31 and 34, and upon a comparison of the types of operations expected to be carried out at the HWF with typical operations at a low-level radioactive waste disposal facility (Ref. 22). Many of the same operations are carried out at both types of facilities; however, there are a number of differences. For example, there is no need at the HWF for an extensive radiation health physics program, although there is an obvious need for an extensive industrial health program. In addition, monitoring activities at most hazardous waste sites appears to be less extensive than those at existing low-level waste disposal sites.

Waste placement operations are also somewhat different. At a low-level waste facility, waste is almost always delivered in packages. The presence of ionizing radiation emitted by the waste packages complicates waste placement, however, and many of the waste packages are disposed randomly. At a hazardous waste disposal facility, much of the waste is delivered in a bulk (unpackaged) form. However, the lack of ionizing radiation emitted by the waste greatly facilitates handling and emplacement of waste delivered in both packaged and bulk forms.

As before, personnel activities can be divided into staff and management, where most of the staff would be involved in waste handling and disposal activities. These include workers such as equipment operators, semi-skilled laborers, and unskilled laborers. To estimate the number of such waste handlers required, use can be made of (1) the estimated composition of the waste, and (2) information on waste handling requirements as set forth in Reference 36. Based on Appendix A and on experience with hazardous waste handling practices, about 20% of the waste is assumed to arrive at the site in drums or other packages, about 20% is assumed to arrive as a sludge, and about 60% is assumed to arrive as an unpackaged material which is more or less a solid. (This is a conservative assumption for purposes of estimating site personnel requirements.) Reference 36 provides an estimate of the personnel man-hour requirements for disposal of packaged waste into a low-level radioactive waste disposal facility. This reference estimates a man-hour requirement of 24 man-minutes per container for stacked disposal of 55-gallon (7.5 ft^3) drums, and 6 man-minutes per container for random disposal. Assuming

000371

that the man-hour requirements for random disposal of 55-gallon drums applies to disposal of sludges and unpackaged solids, and that all packaged waste is stacked, one obtains the following time estimates:

sludges:	(3.225E+6)	(.2)	(6)	(1/7.5) =	516,000	man-min
packaged solids:	(3.225E+6)	(.2)	(24)	(1/7.5) =	2,064,000	man-min
unpackaged solids:	(3.225E+6)	(.6)	(6)	(1/7.5) =	1,548,000	man-min
					4,128,000	man-min

The above calculations are believed to be conservative, since one would expect that it would take less time to randomly dispose of unpackaged waste (which could be delivered in dump trucks) than packaged waste, and considerably less time to dispose of sludges and other semi-liquids. In any case, a single worker would work approximately 2080 x 60 = 124,800 minutes per year. Dividing 4,128,000 by 124,800 results in a requirement for about 31 workers.

Based on the above, the following personnel requirements are assumed for the reference HWF:

Personnel Requirements

	Management		Staff
1	Site manager	2	Secretarial personnel
1	Assistant site manager	2	Waste shipment schedulers
1	Foreman	2	Billing/accounting personnel
1	Environmental services manager	1	Laboratory technician
1	Safety supervisor	3	Industrial safety personnel
1	Customer service coordinator	8	Equipment operators
1	Records manager	14	Semi-skilled laborers (includes mechanics)
1	Security/traffic control coordinator	15	Unskilled laborers
		3	Security/traffic control personnel

Total: 58 on-site personnel.

Radiological Implications to Personnel

In estimating radiological impacts to site personnel, it is important to consider the operational similarities and differences between a sanitary landfill (or open dump) and an HWF. The similarities indicate that the general manner that radiological impacts are calculated would be similar for the two facilities. Waste is delivered in trucks which are directed to the particular working area of the HWF, and after dumping the waste, the trucks leave the site and the waste is covered. This means that it will again be generally convenient to estimate exposures by estimating the average distance that a worker spends in proximity to radiation sources as well as the dust environment that he works in. The former relationship would be used to estimate exposures due to direct gamma radiation. The latter relationship would be used to estimate inhalation and immersion exposures.

As before there are two main sources of radiation exposure to site personnel: (1) disposed waste would be a source of direct radiation as attenuated through a layer of soil, and (2) the working area of the HWF would be a source of direct radiation plus airborne contamination. Again, much more minor sources of personnel exposure would include direct radiation from radionuclides deposited on the ground surface after being blown from the open face, resuspension of these dust particles, and waste delivery trucks. These additional minor sources of radiation exposure, however, are believed to be considered intrinsically in the calculations.

All site personnel may be assumed to be equally exposed to gamma radiation emitted by disposed waste.

The working area will be a source of direct gamma radiation as well as a source of airborne dust. To estimate these exposures, however, one must consider the operational differences between a sanitary landfill (or open dump) and a hazardous waste facility. At a sanitary landfill, almost all of the waste arrives in an unpackaged form, and packaged or not, standard practice is to spread the waste on the ground in thin layers and then crush and compact it using heavy machinery. This crushing and spreading operation provides a driving mechanism for airborne dispersion of waste particulates. At an HWF, operational safety considerations require that much greater attention be given to minimizing dispersion of dust particulates. Packaged waste would be stacked to conserve disposal space, and airborne releases would be generally negligible except for the possible event of an accident in which a container falls, breaks open, and releases part of its contents into the air. Even given this situation, such exposures would only be received by those directly handling the waste; administrative personnel would not be involved.

Unpackaged waste would be dumped at an HWF into a prepared portion of the disposal cell, covered with earth to preclude scatter by wind, and then compacted. Waste would be dumped from above or from the sides of the cells, and personnel contact would be minimized. Unlike the municipal landfill, there would be no crushing or spreading operations to provide a mechanical driving force for airborne dispersion. Rather, waste would probably be covered with a layer of soil prior to compaction to minimize airborne dispersion. This means that about the only mechanisms for dispersion would be (1) waste emplacement activities (dumping) and (2) wind suspension prior to covering with soil. In addition, much of the waste will be received in a damp or semi-liquid form, which would resist dispersion. (Liquids and other excessively damp wastes should be stabilized during disposal operations so that the wastes have the consistency of damp soil or other material with sufficient mechanical strength to support construction equipment.)

This means that unlike the other treatment and disposal facilities considered in this report, radiological impacts would differ depending upon whether the waste arrived in either a packaged or unpackaged form. If the waste arrived in a packaged form, a worker could receive more direct (external) radiation exposure and less exposure from airborne releases. If the waste arrived in an unpackaged form, a worker could receive less direct radiation exposure and more exposure from airborne releases.

000373

For determining direct gamma radiation from packaged waste, it can be assumed that about 20% of the waste arriving daily at the site is in 55-gallon drums. Assuming that waste is received 260 days out of the year, then 12,404 ft^3 of waste would be received per day, of which 2481 ft^3 would be in 55-gallon drums (331 containers). If it is assumed that an average of 5 days worth of packaged waste is received and stacked prior to covering with earth, then 12,404 ft^3 of waste will be stacked at any given time. If a 75% volume utilization efficiency is assumed along with a 9 ft lift (three drums stacked on top of one another), this results in a cross-sectional area equal to 1838 ft^2. Assuming one side is as long as another, this results in a total surface area of 1838 ft^2 on the top and bottom and 386 ft^2 on each of the four sides.

During waste placement, waste drums will be unloaded from trucks and stacked by workers with the help of slings and hoists. A crane or two would be located to one side of the disposal cell and would be used to hoist the drums into place. Heavy equipment operators would run the cranes while laborers and semi-skilled laborers would attach the slings to the drums, help maneuver the drums into place, and detach the slings. (Pallatizing the drums would hasten operations.) Unskilled laborers, and perhaps semi-skilled laborers, would be site workers spending the most time in proximity to the waste, while equipment operators would spend less time in proximity to the waste. Administrative personnel would spend essentially no time in proximity to the waste.

Airborne impacts for packaged waste disposal are approximated assuming an accident in which a container of waste is dropped from a significant height, breaks open, and disperses part of its contents into the air. These estimates are made in Chapter 5.0 based upon assumptions derived from transportation accident considerations.

If the waste is assumed to arrive in an unpackaged form, then exposures due to direct gamma radiation are calculated in a somewhat similar manner as those for packaged waste. In this case, arriving waste is assumed to be dumped into prepared areas to form individual waste cells similar to those depicted in Figure C.11. Waste would be dumped from above or from the side, and personnel contact with the waste would be less extensive than would be the case with packaged waste. If it is again assumed that 5 days worth of solid unpackaged waste is accumulated prior to covering with soil, then approximately 37,200 ft^3 of waste would be so collected. Assuming a 9 ft lift, this results in top and bottom surface areas equal to 4134 ft^2, or 64 ft on a side. This results in side surface areas equal to 579 ft^2.

Airborne impacts from unpackaged waste disposal are estimated assuming that particulates are suspended by wind rather than by mechanical action.

C.5 REFERENCE SITES AND ENVIRONMENTAL CHARACTERISTICS

Calculation of radiological impacts from processing and disposal of de minimis waste is influenced by the environmental characteristics at the waste treatment and disposal location. It is furthermore expected that the user of the impact analysis codes will be mostly interested in generic applications rather than site-specific applications. Given the above, two approaches have been adopted to include environmental considerations into the calculational methodology. First, a set of three different reference treatment/disposal site environmental

characteristics are assumed, and any of the three may be specified by the user of the codes. Many of the assumed parameters specific to these site environments may furthermore be overriden by the code user and different parameters substituted. Second, all site environmental characteristics (or calculational factors which are derived from specific site environmental characteristics) are stored in a separate input file in the computer codes, and the user may optionally expand the file to include additional reference sites.

The environmental characteristics for the reference treatment/disposal sites are derived from three of the four regional disposal sites assumed for the environmental impact statements for the regulation 10 CFR Part 61 on low-level radioactive waste disposal (Refs. 22, 38). Some differences from the Part 61 regional sites are assumed, however, particularly regarding parameters relating to groundwater impacts. The three reference sites adopted for this report include what has been termed the northeast site, the southeast site, and the southwest site. Site characteristics for any one of the reference sites are called by the user by inputing the appropriate integer value for the region index, IR (see Chapter 2.0). A brief descriptive summary of the environmental characteristics of each of the three reference sites follows:

IR	Site	Precipitation	Soil Characteristics	Population Density
1	northeast	humid	low permeability	high
2	southeast	humid	moderate permeability	moderate
3	southwest	semi-arid	high permeability	low

The remainder of this chapter is separated into two sections. Section C.5.1 summarizes the basic environmental properties assumed for each reference site. Section C.5.2 presents the parameters which are used in the computer codes and are derived from the site-specific environmental parameters. Many of these parameters are specific to the particular waste treatment and disposal operation assumed--e.g., on-site waste incineration, off-site municipal solid waste incineration, off-site hazardous waste disposal. Such parameters may be more readily specified for off-site municipal solid waste treatment and disposal and off-site hazardous waste treatment and disposal, since reference facilities and facility operations are assumed. For on-site waste treatment and disposal, however, specific information on the disposal operation must be input by the user. This additional information to be input is also discussed in Section C.5.2, as are those parameters whose values may be overriden by the code user.

C.5.1 Environmental Properties

The basic environmental properties assumed for the three reference sites are listed in Tables C-9 through C-12. The environmental properties have been developed from a number of sources and are meant to be typical of environmental conditions within a particular area of the country. The assumed environmental parameters, however, should not be interpreted as representing any existing disposal site or specific location.

000375

Most of the base environmental properties associated with each reference site are summarized in Table C-9. As shown, the first two sites are located in humid environments while the last site is located in a semi-arid environment.

The average annual natural percolation (PERC) into the groundwater system refers to the amount of rainfall falling onto a site that actually infiltrates into the groundwater system beneath the site. It has been calculated for each reference site as summarized in Tables C-10 and C-11, and using actual representative data (Ref. 36). The calculation involves a mass balance of precipitating water taking into account factors such as infiltration, runoff, evaporation, and transpiration. Note that for the southwest site, a water balance calculation indicates that only a negligible quantity of precipitating water actually enters the groundwater system. For conservativeness, however, and to provide a driving force for the calculations, the percolation for this site is assumed to be 1 mm per year.

The PE index is the Thornthwaite precipitation-evaporation index that is indicative of the antecedent moisture conditions of the soil and is commonly used to differentiate between the dusting potential of soils in different climatic divisions. The PE index is presented in Figure C.12 for the conterminous 48 states of the union (Ref. 36). The PE index and the average silt content of the site soil is used to calculate impacts due to potential inadvertent intrusion into locations of disposed waste.

The average cation exchange capacity of the site soils is used as a guide for selecting retardation coefficients for purposes of calculating impacts from groundwater migration of radionuclides from disposal locations. The groundwater travel time and groundwater speed are also used in the groundwater migration calculations.

The base population distributions for each of the reference sites are summarized in Table C-12. These population sets are used to determine impacts from airborne releases of radionuclides from facilities located in "rural" environments. For facilities located in "urban" environments, population distributions are assumed which are a factor of 10 higher. Other population distributions are assumed for impacts calculated several years following disposal facility closure--e.g., from erosion of a disposal facility several hundred to a few thousand years following disposal. These assumptions are addressed below.

C.5.2 Derived Parameters

Based on the above, a number of derived parameters may be obtained which are used in the calculations. Some of these derived environmental parameters are independent of the particular treatment/disposal method assumed, and are selected by the code user by inputting the desired value of the region index (IR). Other derived parameters are less straightforward, however, since these latter parameters are a function of the assumed treatment or disposal method in addition to the site environment. For municipal or hazardous waste treatment/disposal, reference facilities are assumed, and so these dependent parameters

Table C-9. Summary of Reference Treatment and Disposal Facility Site Environmental Properties

Environmental property	Reference Sites		
	NE(1)*	SE(2)*	SW(3)*
Mean average temperature °C (°F)	8°C (46°F)	17°C (63°F)	14°C (57°F)
Average wind speed m/sec (mph)	4.61 (10.3)	3.61 (8.1)	6.67 (15.5)
No. of days per year having at least 0.01 in of precipitation	146	115	**
Average annual precipitation mm (in)	1,034 (41)	1,168 (46)	485 (19)
Average annual natural percolation (PERC) into groundwater system mm (in)	75 (2.9)	180 (7.1)	1 (.04)
Precipitation-evaporation (PE) index of site vicinity	136	91	21
Average silt content of site soils (%)	65	50	65
Average cation exchange capacity (meq/100g)	15	10	5
Groundwater travel time (yrs), waste to water table	10	10	277
Groundwater speed (m/yr)***	0.2	1.25	10

*The numbers in parentheses denote values for the region index, IR, which are used in the codes to specify environmental parameters for each of the reference sites (e.g., if IR=1, then environmental parameters assumed for the northeast site are used in the calculations).

**Not applicable.

***For the open dump, the ground water speeds for each of the three reference sites are assumed to be 1 m/yr, 5 m/yr, and 10 m/yr, respectively.

000377

Table C-10. Water Balance Analysis Data and Assumptions

Legend: All units in mm of water except for C which is dimensionless.

S_M = Maximum Soil Moisture Storage
P = Precipitation
C = Surface Runoff Coefficient
R = Surface Runoff
I = Infiltration
PET = Potential Evapotranspiration
I-PET = Difference Between (I) and (PET)
CNS = Cumulative Sum of Negative (I-PET)
S = Soil Moisture Storage
dS = Change in Soil Moisture Storage
AET = Actual Evapotranspiration
PERC = Percolation into Ground Water System

Assumptions:

P = Data from Representative Location
PET = Data from Representative Location
C = Estimated for Each Region Based on Typical Soil Descriptions of Region
S_M = For Humid Sites Assumed 100 mm and for Arid Site Assumed 50 mm

Calculations: Follow in Table C-11

000378

Table C-11. Detailed Water Balance Calculations

Month:	J	F	M	A	M	J	J	A	S	O	N	D
Northeast Site: S_M: 100 mm												
P	71	65	73	72	92	110	114	110	92	86	78	71
C	.20	.20	.20	.20	.15	.15	.15	.15	.15	.18	.20	.20
R	14	13	15	14	14	16	17	16	14	15	16	14
I	57	52	58	58	78	94	97	94	78	71	62	57
PET	0	0	0	28	77	111	129	110	75	38	6	0
I-PET	57	52	58	30	1	-17	-32	-16	3	33	56	57
CNS						-17	-49	-65				
S	214	266	324	100	100	84	60	51	54	87	100	157
dS	57	52	58	0	0	-14	-24	-9	3	33	13	57
AET	0	0	0	28	78	108	121	103	75	38	6	0
PERC	0	0	0	30	2	0	0	0	0	0	43	0
Southeast Site: S_M: 100 mm												
P	80	100	96	84	82	102	149	147	103	64	77	81
C	.14	.14	.14	.14	.14	.12	.12	.12	.12	.12	.14	.14
R	11	14	13	12	11	12	18	18	12	8	11	11
I	69	86	83	72	71	90	131	129	91	56	66	70
PET	13	15	37	65	115	158	172	157	114	64	29	13
I-PET	56	71	46	7	-44	-68	-41	-28	-23	-8	37	57
CNS					-44	-112	-153	-181	-204	-212		
S	100	100	100	100	64	32	21	16	12	11	48	100
dS	0	0	0	0	-36	-32	-11	-5	-4	-1	37	52
AET	13	15	37	65	113	147	162	151	10	63	29	13
PERC	56	71	46	7	0	0	0	0	0	0	0	0
Southwest Site: S_M: 50 mm												
P	6	10	20	48	71	79	64	72	37	45	19	14
C	.10	.10	.10	.10	.10	.10	.10	.10	.10	.10	.10	.10
R	1	1	2	5	7	8	6	7	4	4	2	1
I	5	9	18	43	64	71	59	65	33	41	17	13
PET	1	4	21	47	86	129	154	136	95	49	15	0
I-PET	4	5	-3	-4	-4	-58	-95	-71	-62	-8	2	13
CNS			-3	-7	-29	29	-182	-253	-315	-323		
S	20	25	23	20	14	8	3	1	1	1	3	16
dS	23	9	-2	-3	-6	-6	-5	-2	0	0	1	18
AET	1	4	20	46	70	76	67	67	95	41	15	13
PERC	0	0	0	0	0	0	0	0	0	0	0	0

000379

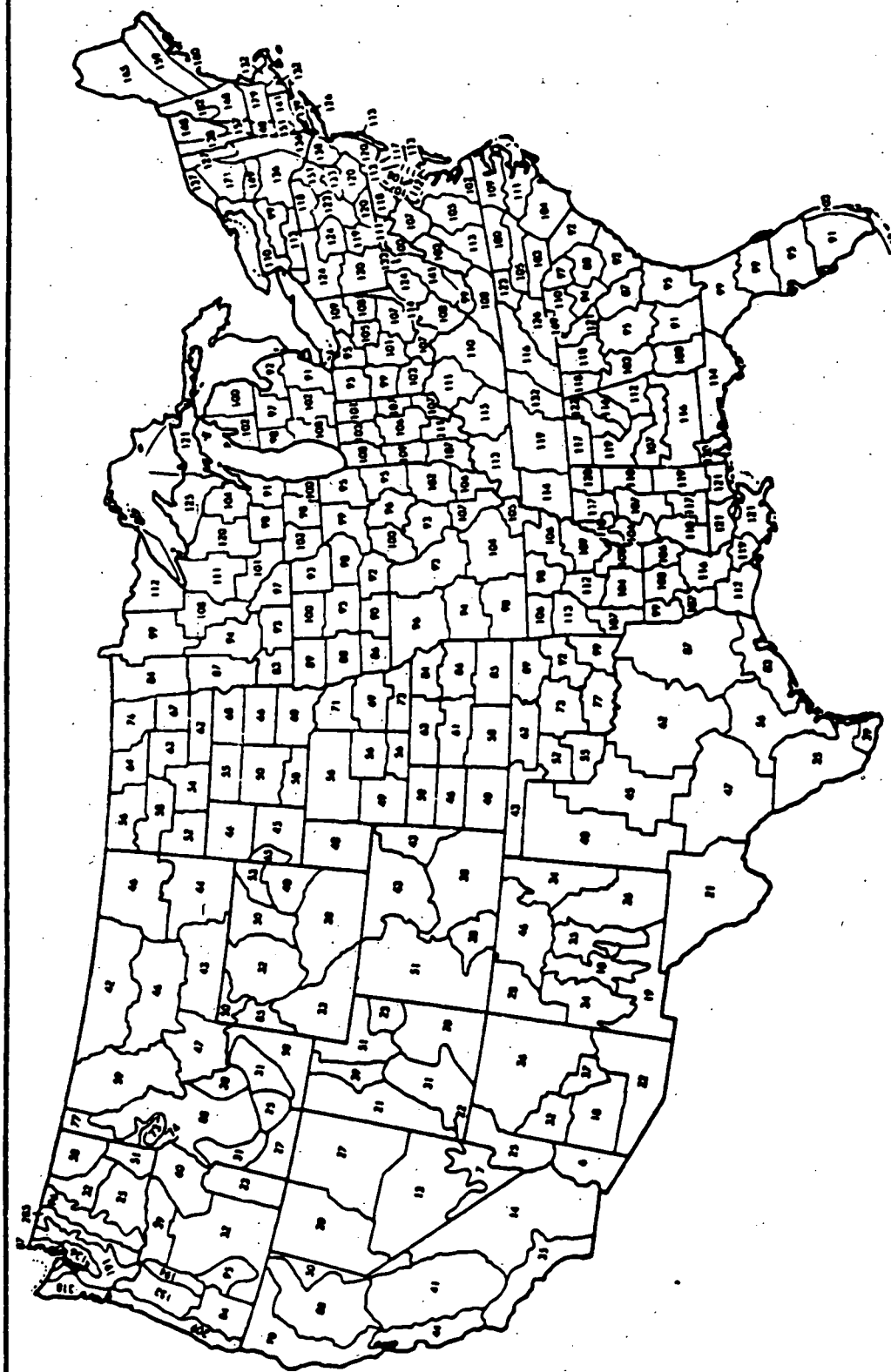

MAP OF THORNTHWAITE'S PRECIPITATION-EVAPORATION INDEX VALUES FOR STATE CLIMATIC DIVISIONS

DAMES & MOORE

Figure C.12

Table C-12. Base Population Distributions for Reference Sites

Distance From Facility	Northeast	Southeast	Southwest
0-5 miles	3,440	2,024	59
5-10 miles	20,513	8,115	180
10-20 miles	73,636	36,000	3,529
20-30 miles	121,559	124,995	9,062
30-40 miles	556,639	203,435	4,888
40-50 miles	1,012,788	104,933	27,158

are derived in this report and presented in this appendix. For on-site disposal, the dependent environmental parameters must be supplied by the user of the code.

In the remainder of this section, the independent derived environmental parameters are first summarized, followed by the dependent derived environmental parameters. Finally, user supplied and override parameters are summarized. Parameters used in the calculations which are totally independent of the site environment are discussed in the main body of this report, and in Section C.2.2.

C.5.2.1 Independent Derived Environmental Parameters

The derived environmental parameters which are used in this report and are independent of the particular method used to treat or dispose of the deminimis waste are summarized below. The terminology "symbol" refers to the variable name used for the particular parameter in the computer codes.

Symbol	Scenario	Environmental Property
FSC	Intruder-construction	Site selection factor for airborne release
FSA	Intruder-agriculture	Site selection factor for airborne release
QFC	Groundwater migration	Dilution factor
NRET	Groundwater migration	Retardation coefficient set
POP	Several scenarios	Transfer factor for airborne impacts to off-site populations
POPE	Exposed waste scenario	Transfer factor for airborne impacts from erosion
POPW	Exposed waste scenario	Transfer factor for waterborne impacts
EERO	Exposed waste scenario	Airborne mobilization rate due to erosion
EREC	Exposed waste scenario	Airborne mobilization rate due to intruder
TPOP	Transportation	Population density along transport route
TDOZ	Transportation	Intermediate calculational factor
WVEL	Several scenarios	Site wind speed
EFAC	Several scenarios	Natural dust mobilization rate
AXOQ	Accident-dropped container	X/Q factor for accident

000381

Corresponding environment-specific values for each of these parameters are given in Table C-13. FSC stands for the site-selection factor (f_s) used for determining airborne impacts stemming from the intruder-construction scenario at a closed disposal site. It is a function of the personnel exposure time, the wind speed at the site, the silt content of the site soil, and the precipitation-evaporation index of the site vicinity. Its derivation is discussed in Section 6.2.1. Similarly, FSA is the site selection factor used for determining airborne impacts from the intruder-agriculture scenario at a closed disposal site. Its derivation is discussed in Section 6.2.2.

The parameters QFC and NRET are used as part of determining impacts from groundwater migration. QFC is the dilution factor (Q) and is discussed in Section 6.3.2. It is the volume of water (in m^3) into which radionuclides released into ground or surface water are diluted. NRET is a dimensionless integer index used to select a particular set (RET) of retardation coefficients for use in the calculations.

Any one of five possible sets of retardation coefficients may be selected by the user of the code (see Table 6-2 in Section 6.3.2); for this report, however, each site environment is assigned a particular NRET set.

The parameter POP has used for several scenarios in this report involving impacts to populations due to airborne releases. These scenarios include airborne releases from: (1) waste incineration (Chapter 4), (2) operation of waste disposal facilities (Chapter 5), (3) intruder-initiated exposed waste scenarios (Chapter 6), and (4) operation of a leachate evaporator (Chapter 6). Basically, POP is the population-weighted sum of the atmospheric dispersion factor (X/Q) as a function of the radial distance from a release source (units of person-year/m^3). POPE is very similar to POP and is used to estimate impacts to populations due to airborne releases associated with the erosion-initiated exposed waste scenario. It is determined by multiplying POP by a factor of 3 to account for population growth in the site area during the period prior to initiation of the scenario.

In this report, reference values for POP and POPE are assumed for each reference site. An example derivation of POP for a particular site is given below. The user may override the assumed values for these parameters, however, as discussed in Subsection C.5.2.3.

As discussed in Section 4.1.5, X/Q for a site atmospheric condition consisting of 1/3 stability Class C, 1/3 stability class D, and 1/3 stability Class F may be expressed a ground level release as follows:

$$X/Q = 4.168 \times 10^{-8}\, q(r)/r^2 \qquad (4\text{-}16)$$

where X/Q is in units of year/m^3, r is the distance from the source point in meters, and q(r) is given as:

$$q(r) = 0.133\,(1 + .0002r)^{\frac{1}{2}} + 0.178\,(1 + .0015r)^{\frac{1}{2}} + 1 + .0003r \qquad (4\text{-}17)$$

For each site environment, POP is calculated as follows: Obtain X/Q from the above equations for the midpoint of the distance from the source point, multiply X/Q by the population in the sector slice, and sum over all distances. As an example for the southeast site (see Table C-12):

Table C-13. Independent Derived Environmental Parameters

Symbol	Scenario/Env. Prop.	Reference Site Environments NE	SE	SW
FSC	Intruder-construction	9.18E-12	2.01E-11	2.64E-10
FSA	Intruder-agriculture	2.96E-11	3.18E-11	8.06E-11
	Dilution factors for groundwater migration			
QFC(1)	·Intruder well	7.7E+3	7.7E+3	7.7E+3
QFC(2)	·Population well	2.0E+5	2.0E+5	2.0E+5
QFC(3)	·Surface water	4.5E+6	4.5E+6	NA
	Airborne transfer factors for population impacts			
POP*	·Operational & intruder exposed waste	5.05E-10	1.75E-10	1.33E-11
POPE*	·Erosion exposed waste	1.51E-9	5.25E-10	3.99E-11
POPW	Waterborne transfer factor for exposed waste	1.11E-7	1.11E-7	NA
TPOP	Transportation population density	2280	610	60
TDOZ	Transportation factor	7.06E-5	7.06E-5	3.92E-5
WVEL	Site average wind speed	4.61	3.61	6.67
AXOQ	Hazardous waste accident X/Q factor	9.68E-11	1.40E-10	4.11E-11
EFAC	Natural dust mobilization rate	5.53E-7	1.54E-8	7.95E-6
EERO	Airborne mobilization rate, erosion	5.53E-7	1.54E-8	7.95E-6
EREC	Airborne mobilization rate, intruder	2.03E-6	2.50E-6	6.84E-5
NRET	Retardation coefficient set used for groundwater migration	3	2	1

* Values given for rural environment (IPOP=2). For an urban environment (IPOP=1), multiply by 10.

r (miles)	r (meters)	X/Q	Population	POP
2.5	4,023	7.36E-15	2,024	1.49E-11
7.5	12,070	1.62E-15	8,115	1.31E-11
15	24,140	6.90E-16	36,000	2.48E-11
25	40,233	3.83E-16	124,995	4.78E-11
35	96,326	2.63E-16	203,435	5.35E-11
45	72,419	2.00E-16	104,933	2.09E-11
			Total:	1.75E-10

These reference values of POP and POPE are assumed to be applicable to a rural environment. For operations taking place in an urban environment, the calculated reference values are multiplied by 10. (For POP and POPE calculations involving user-supplied override parameters, no such multiplication by 10 is performed.)

POPW is discussed in Section 6.4.2 and is used as the site selection factor (f_s) for the waterborne releases associated with the intruder- and erosion-initiated exposed waste scenarios.

EERO and EREC denote the airborne mobilization rates, respectively, for the erosion-initiated and intruder-initiated exposed waste scenarios. These mobilization rates are in units of g/m^2-sec and are discussed in Section 6.4.1.

Two environment-specific parameters associated with waste transportation include TPOP and TDOZ. TPOP is the population density (persons/mile^2) along the transport route.

It is apparent that the population density can be highly variable, depending upon the region of the country considered and the relationship of waste generators, transport routes, and waste treatment/disposal facilities to population centers. Waste delivered to a treatment or disposal facility, for example, may originate in an area of high population density and be treated/disposed in an area of low population density.

Given the generic nature of this study, it would be counterproductive, not to mention impossible, to attempt to provide a detailed population density distribution for all possible transportation routes between all possible waste generators and all possible waste treatment/disposal facilities. What is done, rather, is to estimate average population densities in the vicinity of each of the reference site environments considered in this report. As discussed in Section 2.1, these reference site environments are derived from the regional disposal facility sites considered for the Part 61 EIS (Refs. 22, 38). These regional sites were all assumed to be located in rural environments.

The four regional sites were termed the northeast, southeast, western, and midwest regional sites in the Part 61 EIS, and this report uses the environmental characteristics from the first three sites. The population densities for these sites averaged over a 50-mile radius around the sites are as follows: northeast: 228 persons/mile^2, southeast: 61 persons/mile^2, western: 6 persons/mile^2, and midwest: 79 persons/mile^2. Assuming that

these population densities represent rural environments and that waste transportation will be through rural as well as urban areas, the following population densities are assumed in this report:

TPOP		
Reference Site Environments		
NE	SE	SW
2280	610	60

These values may be compared to the average population densities as averaged over each of the five NRC regions within the contiguous United States. These are calculated as follows (Ref. 39, 41):

NRC Region		Ave. Pop. Density (persons/mile^2)
1	(NE)	300
2	(SE)	130
3	(NW)	117
4&5	(W)	37

As shown, these average population densities are all less than the population densities assumed in this report for the three reference sites.

Another comparison may be made with the assumptions for population densities made in the Final Environmental Statement on the Transportation of Radioactive Material by Air and Other Modes (Ref. 42). In this statement, a demographic model is used which considers population densities for "urbanized areas" (a central city with 50,000 or more inhabitants and surrounding closely settled territory), "other urban areas" (urban populations outside the urbanized areas around the larger cities), and rural areas. Using this data base, a demographic model is formulated which assumes that individuals are located in either urban, suburban, or rural environments. An extreme density urban environment (calculations dominated by New York City) was also considered. The population densities for this data base and demographic model are given in Table C-14. Reasonable correlation appears to be made between the assumptions in this statement of the assumptions in this report, especially considering that it is very unlikely than a waste treatment or disposal facility will be located within the heart of a built up (central city) urban area.

TDOZ is the solution to equation 3-22 with the variables P, L, K and V assumed to be unity (see Section 3.3). TDOZ was calculated by assuming a lower boundary for the exposure distance (x_{min}) equal to 30 ft for the northeast and southeast sites, and 100 ft for the southwest site.

The final three parameters include WVEL, EFAC, and AXOQ. WVEL is merely the site wind speed, in m/sec, listed in Table C-9. EFAC is the dust mobilization rate at the site due to ambient wind conditions. It has units of g/m^2-sec and is derived for each reference site using equations 5-18 and 5-19 as discussed in Section 5.5.3.1 of this report. AXOQ is in units of yr/m^3 and denotes the atmospheric dispersion factor used for calculation of off-site impacts to an individual resulting from a dropped container accident. It is derived using equation 5-21 as discussed in Section 5.5.4.

000385

Table C-14. Summary of Population Density, Data Base, and Demographic Model

Population Zone	Land area (%)	Population Distribution (%)	Population Density (persons/mile^2)
A. Urbanized Area			
-- Central City	0.18	31.5	10,000
-- Urban fringe	0.8	26.8	1,862
-- Total	0.98	58.3	3,375
B. Other Urban Areas	0.53	15.2	1,862
C. Rural Areas	98.5	26.5	15.5
D. Demographic Model Used in Statement			
-- Urban	0.18	31.5	10,000
-- Suburban	1.3	42.0	1,862
-- Rural	98.5	26.5	15.5
-- Extreme density urban*	--	--	40,000

*Calculations dominated by only one case, New York City.

C.5.2.2 Dependent Derived Environmental Parameters

The derived environmental parameters which are used in this report and are dependent upon the particular treatment/disposal method are summarized below. All parameters relate to groundwater migration calculations. The terminology "symbol" refers to the variable name used for the particular parameter in the computer codes. These parameters are given in the computer codes for the reference municipal and hazardous waste disposal facilities but must be provided by the user for on-site disposal.

Symbol	Scenario	Unit	Environmental Property
DTTM	Groundwater migration	yrs	Travel time between sectors
TTM	Groundwater migration	yrs	Travel time from first sector to appropriate biota access location
DTPC	Groundwater migration	*	Peclet number between sectors
TPC	Groundwater migration	*	Peclet number from first sector to appropriate biota access location
PRC	Groundwater migration	m/yr	Percolation coefficient
TSC	Groundwater migration	*	Contact time fraction

*Dimensionless.

Specific assumed values for all but the last two of the above parameters for the reference waste disposal facilities are given in Table C-15. The reference disposal facilities include a municipal waste sanitary landfill, a municipal waste open dump, and a hazardous waste landfill facility. Two variations on the hazardous waste facility are given which differ depending upon the amount of percolation assumed to contact the waste.

Formulation of the travel times and Peclet numbers is discussed in Section 6.3.2 Briefly, groundwater migration is modeled for the reference disposal facilities by assuming that the disposal facilities are laid out as rectangles with the longer dimension conservatively aligning with the direction of groundwater flow. The dimensions of the municipal waste landfills (sanitary landfill and open dump) are 300 m by 340 m (102,000 m^2) while the dimensions of the hazardous waste facility are 665 m by 910 m (606,000 m^2). These disposal areas are then divided into 10 sectors, and 1/10 of the disposal site radionuclide inventory is assumed to be released as a point source from the center of each sector. The dose rate obtained at each down gradient biota access location is obtained by summing the dose rate calculated from releases from each sector.

TTM is the time (years) for radionuclides to travel from the disposal waste in the first sector (the sector nearest the biota access locations) to the particular biota access location considered. This time is the sum of the vertical travel time from the waste to the aquifier and the horizontal travel time along the aquifier to the biota access location. For the hazardous waste facility in the southeast site, for example, TTM is 46.4 years to the intruder well. This corresponds to a travel time of 10 years from the waste to the aquifier added to a travel time of 36.4 years across half the first sector distance (45.5 m divided by a ground water speed of 1.25 m/yr). The travel time for each of the next nine sectors is determined by adding successive multiples of the travel time between the midpoints of adjacent sectors. TTM is calculated for the other disposal methods in a similar manner, except that the vertical travel time is assumed to be zero for the open dump when located in the northeast and souteast site environments.

The travel time between adjacent sectors, designated by DTTM, is determined by dividing the sector widths by the groundwater speeds. DTTM is shown to be 72.8 years for the hazardous waste facility at the southeast site.

The Peclet numbers are determined and used in an analogous manner to the groundwater travel times, where a Peclet number is calculated as the distance to the biota access location divded by the longitudinal dispersivity of the medium. TPC is the Peclet number calculated for the distance between the first sector (the sector closest to the biota access locations) and the particular biota access location. The Peclet number for each of the next nine sectors is determined by adding successive multiples of the Peclet number calculated for the distances between the midpoints of adjacent sectors. The Peclet number between sectors is denoted DTPC.

Table C-15. Dependent Derived Environmental Parameters

		Reference Site Environments								
		NE			SE			SW		
Symbol	Parameter/Env. Prop.	SL*	OD*	HWF*	SL	OD	HWF	SL	OD	HWF
DTTM	Travel time between sectors (years)	170	34	455	27.2	6.8	72.8	3.4	3.4	9.1
	Travel time (years)									
TTM(1)	·to intruder well	95	17	237.5	23.6	3.4	46.4	280	280	280
TTM(2)	·to population well	2500	500	2500	400	100	400	580	580	580
TTM(3)	·to surface stream	5000	1000	5000	800	200	800	NA	NA	NA
DTPC	Peclet number between sectors	340	340	910	680	680	1820	340	340	910
	Peclet number									
TPC(1)	·to intruder well	170	170	455	340	340	910	170	170	455
TPC(2)	·to population well	10000	10000	10000	10000	10000	10000	30000	30000	30000
TPC(3)	·to surface stream	20000	20000	20000	20000	20000	20000	NA	NA	NA

* SL: Municipal waste sanitary landfill
OD: Municipal waste open dump
HWF: Hazardous waste facility

The distances assumed between sectors and from the midpoint of the first sector to each of the biota access locations are given below for each of the reference sites and facilities.

	Site Environments					
	NE		SE		SW	
Distances (m)	LF*	HWF*	LF	HWF	LF	HWF
Between sectors	34	91	34	91	34	91
From first sector midpoint:						
• to intruder well	17	45.5	17	45.5	17	45.5
• to population well	500	500	500	500	3,000	3,000
• to surface water	1,000	1,000	1,000	1,000	NA**	NA**

* LF: municipal waste landfill (both sanitary landfill and open dump)
HWF: hazardous waste facility
**Not applicable.

The assumed dispersivities are 0.1 m for the northeast site, 0.05 m for the southeast site, and 0.1 m for the southwest site.

The parameter PRC is the annual percolation into the disposal cells, in m/yr. The parameter TSC is dimensionless and is given as the following:

$$TSC = t_c = p/nv$$

where

t_c = p/nv, the contact time fraction
p = percolation into waste (m/yr)
n = effective porosity of the disposed waste
v = speed of percolating water (m/yr)

For this work, n is assumed to be 0.25 and v is assumed to be 111 m/yr (1 ft/day). The percolation, p, is a function of the amount of rainfall at the site (plus other site environmental conditions) as well as the assumed effectiveness of the disposal facility covers. This results in the following values for PRC and TSC:

	Site Environments					
Disposal Facility	NE		SE		SW	
	PRC	TSC	PRC	TSC	PRC	TSC
Sanitary landfill	0.074	2.66E-3	0.180	6.47E-3	0.001	3.60E-5
Open Dump	0.150	5.39E-3	0.360	1.29E-2	0.002	7.19E-5
Hazardous Waste Facility - 1	0.036	1.29E-3	0.030	1.08E-3	0.001	3.60E-5
Hazardous Waste Facility - 2	0.074	2.66E-3	0.180	6.47E-3	0.001	3.60E-5

000389

C.5.2.3 User Supplied and Override Environmental Parameters

To complete the discussion, two additional features of the codes must be considered. First, for on-site disposal most of the environmental parameters discussed in the previous two subsections must be supplied by the user of the codes. Second, many of the environmental parameters calculated for each of the three reference sites may be overridden by the code user and replaced with other valves. This mostly applies to off-site treatment/disposal facilities but also applies to some parameters used to determine impacts from airborne releases from the on-site facility.

For on-site disposal, the following environmental parameters must in all cases be supplied by the code user: PRC, TSC, DTTM, TTM, DTPC, TPC, FSC, FSA, QFC, WVEL, EFAC, and NRET. The derivation of these paramters has been discussed in the preceeding two subsections. For off-site disposal as a municipal or hazardous waste, the code user may optionally replace the assumed values for these parameters with other input values.

Values for parameters associated with routine (non accident) airborne releases from a facility may also be overriden by the code user. These include atmospheric dispersion (X/Q) factors for incinerator and disposal facility operation, and the population-weighted atmospheric transfer factor, POP. The X/Q factors are multiplied by individual exposure duration factors, to form what has been termed site selection factors (f_S) for determining impacts to an individual located off the waste treatment or disposal facility site. The exposure duration factors denote the fraction of the time, that the airborne release occurs, that the exposed individual is located in the centerline of the released plume of activity. Use of the X/Q and POP factors has been discussed in Section 4.1.5. (Also see the previous Section C.5.2.)

If the code user chooses to exercise the override option, the following information must be provided (each parameter is an array having 6 values):

Parameter	Units	Description
DSP	meters	Distance to population
PDS	persons	Population at distance specified by DSP
WSP	m/sec	Wind speed in each stability class
STB	yr^{-1}	Frequency of each stability class

Six additional parameter values that must be input to determine incinerator and disposal facility operational X/Q values are listed below:

Parameter	Units	Description
HYTI	m	Airborne release height for incinerator
HYTO	m	Airborne release height for disposal facility operation
DISTI	m	Distance to off-site individual, incinerator
DISTO	m	Distance to off-site individual, disposal facility operation
EDFID	*	Exposure duration factor for off-site individual, incinerator
EDFOD	*	Exposure duration factor for off-site individual, disposal facility operation

*Dimensionless

X/Q factors and POP are then determined by the codes using the procedure outlined in Section 4.1.5. To summarize, XOQI, XOQO, and POP are calculated as shown in equations C-1, C-2, and C-3, where XOQI and XOQO denote, respectively, X/Q factors for incinerator and disposal facility operations. (The release height is always assumed to be zero when determining POP -- see Section 4.1.5.)

$$XOQI = 2.032\ EDFID \sum_{I=1}^{6} STB(I)\ \exp[-\tfrac{1}{2}(HYTI/SIGZ)^2]/(WSP(I)\ DISTI\ SIGZ) \qquad (C\text{-}1)$$

$$XOQO = 2.032\ EDFOD \sum_{I=1}^{6} STB(I)\ \exp[-\tfrac{1}{2}(HYTO/SIGZ)^2]/(WSP(I)\ DISTO\ SIGZ) \qquad (C\text{-}2)$$

$$POP = 2.032 \sum_{J=1}^{6} \sum_{I=1}^{6} (PDS(J)\ STB(I))/(WSP(I)\ DSP(J)\ SIGZ) \qquad (C\text{-}3)$$

In these equations, SIGZ stands for δ_Z, which is the vertical standard deviation of the plume given by equation 4-14--i.e.:

$$\delta_Z = (ar)\ (1 + br)^c \qquad (4\text{-}14)$$

where (r) is the distance (in meters) from the release point, and a, b, and c are constants that depend upon the stability class. These constants are as follows:

Pasquill Stability Class	I	Constants a	b	c
A	1	0.2	0	0
B	2	0.12	0.	0
C	3	0.08	0.0002	-0.5
D	4	0.06	0.0015	-0.5
E	5	0.03	0.0003	-1
F	6	0.016	0.0003	-1

To calculate XOQ, r in equation 4-14 is replaced by DISTI or DISTO. To calculate POP, r in equation 4-14 is replaced by DSP(J).

REFERENCES

(1) Triglio, G., "Volume Reduction Techniques in Low-Level Radioactive Waste Management," NUREG/CR-2206, Teknekron, Inc., for U.S. Nuclear Regulatory Commission, September 1981.

(2) Wild, R. E., O. I. Oztunali, J. J. Clancy, C. J. Pitt, and E. D. Picazo, "Data Base for Radioactive Waste Management, Volume 2: Waste Source Options Report," NUREG/CR-1759, Dames and Moore for U.S. Nuclear Regulatory Commission, November 1981.

(3) U.S. Nuclear Regulatory Commission, "10 CFR Part 20: Standards for Protection Against Radiation; Burial of Small Quantities of Radionuclides," Federal Register Notice, 45 FR 71761, October 30, 1982.

(4) U.S. Nuclear Regulatory Commission, "Information Needed in an Application For Burial of Radioactive Waste in Soil by Individual Licensees," November 1980.

(5) U.S. Nuclear Regulatory Commission, "Disposal or Onsite Storage of Thorium or Uranium Wastes From Past Operations," Federal Register Notice, 46 FR 52061, October 23, 1981.

(6) Sittig, M., "Environmental Sources and Emissions Handbook," Noyes Data Corporation, 1975.

(7) Mantell, C. L., "Solid Wastes: Origin, Collection, Processing, and Disposal," John Wiley & Sons, 1975.

(8) Pavoni, J. L., J. E. Heer, Jr., and D. J. Hagerty, "Handbook of Solid Waste Disposal, Materials and Energy Recovery," Van Nostrand Reinhold Company, 1975.

(9) Achinger, W.C. and L.E. Daniels, "An Evaluation of Seven Incinerators," SW-51ts.1j, U.S. Environmental Protection Agency, 1970.

(10) U.S. Environmental Protection Agency, "Compilation of Air Pollutant Emission Factors, Third Edition, Parts A and B (Including Supplements 1 through 7)," Research Triangle Park, NC, August 1977.

(11) Healy, J. W. and J. C. Rodgers, "Limits for the Department of Energy Transuranic Wastes," LA-UR-79-100, Los Alamos Scientific Laboratory, January 1979.

(12) Max, B. J., "Resource Recovery and Waste Reduction Activities, A Nationwide Survey," SW-432, U.S. Environmental Protection Agency, November 1989.

(13) Wang, L. K. and N.C. Pereira (eds.), "Handbook of Environmental Engineering, Vol. 2: Solid Waste Processing and Resource Recovery," Humana Press, Clifton, New Jersey, 1980.

000393

(14) Systech Corporation, "An Overview of U.S. and Canadian Experience with European Mass Burning Waterwall Incinerator Systems," Systech Corporation for U.S. Environmental Protection Agency, May 1980.

(15) General Electric Company, "Solid Waste Management Technology Assessment," Van Nostrand Reinhold Company, 1975.

(16) Personal Communication from Ken Shuster, U.S. Environmental Protection Agency, Office of Solid Waste, to G. W. Roles, U.S. Nuclear Regulatory Commission, Division of Waste Management, December 1, 1982.

(17) U.S. Environmental Protection Agency, "Solid Waste Facts, A Statistical Handbook," SW-694, October, 1979.

(18) Buckley, D. W., et al., "Environmental Assessment of Consumer Products Containing Radioactive Material," NUREG/CR-1775, Science Applications, Inc. for U.S. Nuclear Regulatory Commission, October 1980.

(19) U.S. Environmental Protection Agency, "Landfill Disposal of Solid Waste," Federal Register Notice, 44 FR 18138, March 26, 1979.

(20) Bond, R. G., et al., (eds.), "Handbook of Environmental Control, Volume II: Solid Waste," Chemical Rubber Company (CRC), 1973.

(21) Brunner, D. R. and D. J. Keller, "Sanitary Landfill Design and Operation," SW-65ts, U.S. Environmental Protection Agency, 1972.

(22) U.S. Nuclear Regulatory Commission, "Draft Environmental Impact Statement on 10 CFR Part 61: 'Licensing Requirements for Land Disposal of Radioactive Waste'," NUREG-0782, Office of Nuclear Material Safety and Safeguards, September 1981.

(23) U.S. Environmental Protection Agency, "Hazardous Waste Generation and Commercial Hazardous Waste Management Capacity, An Assessment," SW-894, Booz-Allen & Hamilton, Inc. and Putnum, Hayes & Bartlett, Inc. for U.S. EPA, December 1980.

(24) Scurlock, A. C., et al., "Incineration in Hazardous Waste Management," SW-141, U.S. Environmental Protection Agency, 1975.

(25) U.S. Environmental Protection Agency, "Review of Activities of Major Firms in the Commercial Hazardous Waste Management Industry, 1981 Update," SW-894.1, Booz-Allen & Hamilton, Inc., for U.S. Environmental Protection Agency, 1982.

(26) U.S. Environmental Protection Agency, "Siting of Hazardous Waste Management Facilities and Public Opposition," SW-809, Centaur Associates, Inc. for U.S. EPA, 1979.

(27) U.S. Environmental Protection Agency, "Destroying Chemical Wastes in Commercial-Scale Incinerators (Facility Report 5)," SW-122C.4, 1977.

(28) U.S. Environmental Protection Agency, "Destroying Chemical Wastes in Commercial-Scale Incinerators (Facility Report 6)," SW-122C.5, 1977.

(29) Corson, A., et al., "State Decision-Makers Guide for Hazardous Waste Management," SW-612, U.S. Environmental Protection Agency, 1977.

(30) Neely, N., et al., "Remedial Actions at Hazardous Waste Sites, Survey and Case Studies," SW-910, U.S. Environmental Protection Agency, January 1981.

(31) Pojasek, R. B., "Toxic and Hazardous Waste Disposal," Volume 4, Ann-Arbor Science, 1980.

(32) U.S. Environmental Protection Agency, "Hazardous Waste Facilities Storage/ Treatment Standards--A Summary of the Regulations," SW-904, Office of Water and Waste Management, January 1981.

(33) Wilkes, A., et al., "Controlling Hazardous Waste Under RCRA," (SW-959), U.S. Environmental Protection Agency, September 1982.

(34) Pojasek, R. B., "Toxic and Hazardous Waste Disposal," Volume 2, Ann-Arbor Science, 1980.

(35) Miklitsch, F. J., "Cecos International, Inc., Facilities Operation Plan, Secure Chemical Management Facilities," undated.

(36) Oztunali, O. I., G. C. Re', P. M. Moskowitz, E. D. Picazo, and C. J. Pitt, "Data Base for Radioactive Waste Management, Volume 3, Impacts Analyses Methodology Report," NUREG/CR-1759, Dames & Moore for U.S. Nuclear Regulatory Commission, November 1981.

(37) Vogel, G. A., "The Estimation of Hazardous Waste Incineration Costs," MITRE Corporation for U.S. Environmental Protection Agency, January 1983.

(38) U.S. Nuclear Regulatory Commission, "Final Environmental Impact Statement on 10 CFR Part 61: 'Licensing Requirements for Land Disposal of Radioactive Waste'," NUREG-0945, Office of Nuclear Material Safety and Safeguards, November 1982.

(39) U.S. Geologic Survey, "The National Atlas of the United States," Washington, D.C., 1970.

(40) Tchobanoglous, G., H. Theisen, and R. Eliassen, "Solid Wastes, Engineering Principles and Management Issues," McGraw-Hill Book Company, 1977.

(41) U.S. Department of Commerce, "Statistical Abstract of the United States," 102nd Edition, December 1981.

(42) U.S. Nuclear Regulatory Commission, "Final Environmental Statement on the Transportation of Radioactive Material by Air and Other Modes," NUREG-0170, Office of Standards Development, December 1977.

(43) Keitz, E., et al., "Hazardous Waste Control Technology Data Base, A Profile of Incineration Facilities," MITRE Corporation for U.S. Environmental Protection Agency, November 1982.

(44) U.S. Environmental Protection Agency, "Draft RCRA Guidance Document: Landfill Design, Liner Systems and Final Cover," July 1982.

APPENDIX D

PATHWAY DOSE CONVERSION FACTORS

TABLE OF CONTENTS

Section		Page
D.1	CONCEPT OF PDCF	D-1
D.2	CALCULATIONAL PROCEDURES	D-6
	D.2.1 Radionuclides Considered	D-9
	D.2.2 Fundamental Dose Conversion Factors	D-9
	D.2.3 Translocation Factors	D-22
	D.2.4 Lists of Pathway Dose Conversion Factors	D-24
REFERENCES		D-45

LIST OF TABLES

Table		Page
D-1	Uptake Pathways Considered for Pathway Dose Conversion Factors	D-4
D-2	Biota Access Location-to-Human Pathway Descriptions	D-5
D-3	Equations Used to Calculate Pathway Dose Conversion Factors	D-7
D-4	Radionuclides Considered in Report	D-10
D-5	Element Solubility Classes	D-11
D-6	DCF1: Fundamental Dose Conversion Factor for Ingestion	D-14
D-7	DCF2: Fundamental Dose Conversion Factor for Inhalation	D-16
D-8	DCF3: Fundamental Dose Conversion Factor for External Exposure (Volume Source)	D-18
D-9	DCF4: Fundamental Dose Conversion Factor for External Exposure (Area Source)	D-19
D-10	DCF5: Fundamental Dose Conversion Factor for External Exposure (Air Immersion)	D-20
D-11	f_1: Soil-to-Plant Transfer Factors	D-25
D-12	f_4: Feed- and Water-to-Meat Transfer Factors	D-26
D-13	f_6: Feed- and Water-to-Milk Transfer Factors	D-27
D-14	Water-to-Seafood Transfer Factors	D-28
D-15	Radionuclide Independent Parameters Used in Calculations	D-29
D-16	Intermediate Parameters Used in Calculations	D-30
D-17	PDCF-1: PDCF for Chronic Airborne Pathways	D-31
D-18	PDCF-2: PDCF for Acute Airborne Pathways	D-33
D-19	PDCF-3: PDCF for Chronic Airborne Pathways Including Food/Air Pathways	D-35
D-20	PDCF-4: PDCF for Food/Soil Pathways	D-37
D-21	PDCF-5: PDCF for Direct Gamma Radiation (Volume Source)	D-39
D-22	PDCF-6: PDCF for Well Water Pathways	D-41
D-23	PDCF-7: PDCF for Surface Water Pathways	D-43

LIST OF FIGURES

Figure		Page
D.1	Total Exposure Rate vs. Gamma Energy at One Meter Above Bulk Contaminated Soil	D-21

000399

APPENDIX D. Pathway Dose Conversion Factors

This appendix presents the data and calculational procedures used to determine the pathway dose conversion factors (PDCF's) used in the computer codes to determine radiological impacts resulting from the presence of a given concentration of a particular radionuclide at a particular biota access location.

D.1 CONCEPT OF PDCF

There are many diverse mechanisms through which radionuclides contained in de minimis waste streams may be potentially released (e.g., mobilized from the waste and become accessible to a transport agent such as wind or water), transported through the environment (e.g., moved from one location to another through the atmosphere or soil by a transport agent), and thereby become accessible to humans through various pathways. Human access to the radioactive material may result either through direct human contact with contaminated material (e.g., inhalation of air, ingestion of water, or direct exposure to radiation) or indirectly through contaminated biota (through a multitude of pathways involving ingestion of plants or animals which have taken up radionuclides) which have come into contact with contaminated material. Each of these radionuclide release/transport/pathway combinations (scenarios) represents a complex series of interactions which are affected by a wide range of parameters such as waste properties, treatment or disposal facility environmental conditions, and operational procedures.

In this report, the generalized approach to calculating human exposures to an individual from a given release/transfer/pathway scenario and a given de minimis waste stream is given as follows:

$$H = \sum_{i=1}^{N} C_i \times I_i \times PDCF_i \qquad \text{(D-1)}$$

where:

H = the dose rate to an individual in units of mrem/yr;
C_i = the concentration of the ith radionuclide (in Ci/m^3) in the particular de minimis waste stream considered;

I_i = a transfer factor relating the concentration of the radionuclide in the waste to the concentration of the waste at a biota access location (a location, such as a well drilled into an aquifer, where humans may be exposed to or uptake radioactivity); and

$PDCF_i$ = the pathway dose conversion factor for the ith radionuclide in units of mrem/yr per Ci/m^3.

In the above equation, the generalized transfer factor, I, represents the movement of a radionuclide from the waste to a biota access location. This frequently involves a complex series of calculations which are discussed in appropriate chapters of the main report. Once the concentration of a given radionuclide is determined at a given biota access location, the interaction

of the radionuclide (and the radiation it emits) with human tissue must be quantified and the resultant dose rates determined. This is done through a series of radionuclide-specific parameters known as pathway dose conversion factors which are independent of the original means of contamination.

As an example, consider a construction worker who operates heavy machinery within an excavation into a sanitary landfill into which a quantity of radionuclides had been disposed several years earlier. Over the intervening years, the waste has decomposed and the excavation process stirs up a cloud of dust which contains a portion of the disposed radioactivity. Thus, the worker can be modeled as being immersed in a cloud of dust containing known concentrations (Ci per m^3 of air) of a particular group of radionuclides. Potential exposures to the worker could result from the following five pathways:

- inhalation of the contaminated air;
- direct ionizing radiation exposure from being immersed in the contaminated air;
- direct ionizing radiation exposure from contaminated dust which has settled to the ground surface;
- inhalation of contaminated dust which has been resuspended from the ground surface; and
- immersion in the contaminated dust which has been resuspended from the ground surface.

The resulting radiological impacts would be determined by a series of equations describing the movement and uptake of the radioactivity. Factors such as the breathing rate of the individual would be considered, in addition to the deposition and resuspension rates of the individual radionuclides, and so forth. A series of dose conversion factors (termed fundamental dose conversion factors (DCF) in this report to distinguish them from PDCF's) would be used to determine resulting exposures. (For example, once a known quantity of a given radionuclide is inhaled, a dose rate can be determined by multiplying by an appropriate inhalation DCF). The total dose rate from immersion in the contaminated cloud would be determined by adding the dose rate from all five pathways.

Consider, however, that one may be interested in calculating dose rates to several individuals at different times. In addition, the above five pathways would be appropriate for a number of situations in which an individual could be immersed in a contaminated cloud--e.g., due to disposal operations at (or intrusion into) a hazardous waste facility or open dump, processing operations at a municipal or hazardous waste incinerator, etc. It would be highly inconvenient to repeatedly calculate radionuclide movement and uptake through the five example pathways, and repeatedly sum the result. Furthermore, the main use of the calculational methodology is expected to be in generic rather than site-specific calculations.

Based on the above, the approach taken is to decouple the dose rate calculational procedure from the original means of contamination. Using the above example, a single PDCF is created for each radionuclide which is a combination of the impacts received through the five separate pathways. That is, given a unit concentration (1 Ci/m^3) of a radionuclide in air, the dose rates from all five pathways are summed to effectively form a single pathway dose conversion

000401

factor. Different PDCF's are created for different combinations of environmental pathways.

The pathway dose conversion factors used in this report are summarized in Table D-1 and D-2. All PDCF's are given in units of mrem/yr per Ci/m^3 in the media at the biota access location. Depending upon the situation, the media may consist of a solid (e.g., Ci per m^3 of soil), a liquid (e.g., Ci per m^3 of water), or a gas (e.g., Ci per m^3 of air).

Different PDCFs are used appropriate to a given situation. As shown, some PDCF's are composed of primary and secondary pathways. For some exposure scenarios, more than one PDCF is used.

The first three pathway dose conversion factors are very similar and are all used to estimate exposures when the biota access location is contaminated air. PDCF-1 is used to determine impacts from airborne releases of radionuclides which occur on a chronic basis and in a working environment. Applications of PDCF-1 include airborne releases during operation of a waste treatment or processing facility (e.g., a municipal waste incinerator, landfill, hazardous waste incinerator or disposal facility). Impacts are calculated to facility personnel. PDCF-2 is used to determine impacts from airborne release of radionuclides due to construction activities at a closed disposal site (intruder-construction scenario), or for other impact scenarios when the period of exposure lasts for considerably less than a year (acute exposures). The acute nature of the impacts are considered when formulating the equations used to describe the pathways.

PDCF-3 is also used to determine impacts of airborne releases due to the actions of an intruder, but for a scenario in which the intruder is assumed to live at the closed disposal site (intruder-agriculture scenario). The period of exposure is assumed to last continuously for several years. The main difference between PDCF-1 and PDCF-3 is that the latter includes a pathway involving consumption of leafy vegetables dusted by fallout.

PDCF-4 is used to determine chronic exposures from consumption of food (vegetables, etc.) grown in contaminated soil, as well as consumption of animals (or animal products) which have been fed forage grown in contaminated soil. It is used to calculate a portion of the impacts arising from the intruder-agriculture scenario.

PDCF-5 determines direct gamma radiation exposures due to a person's proximity to soil contaminated with radionuclides. Exposures are modeled as an infinite slab source. PDCF-5 is used extensively in the computer codes to determine direct gamma radiation exposures from a number of applications, including waste transportation, waste processing and disposal operations, and post-disposal scenarios involving human intrusion. In the equations describing exposure to humans resulting from these applications, correction factors are inserted which correct for specific materials (which may be different from dirt) and possible finite extents of the sources.

Table D-1. Uptake Pathways Considered for Pathway Dose Conversion Factors

PDCF	Biota Access media	Uptake Pathways	
1*	air	Inhalation (air)	(p)**
		Direct Radiation (air)	(p)
		Inhalation (soil)	(s)**
		Direct Radiation (area)	(s)
		Direct Radiation (air)	(s)
2*	air	Inhalation (air)	(p)
		Direct Radiation (air)	(p)
		Inhalation (soil)	(s)
		Direct Radiation (area)	(s)
		Direct Radiation (air)	(s)
3	air	Inhalation (air)	(p)
		Direct Radiation (air)	(p)
		Food (air)	(p)
		Inhalation (soil)	(s)
		Direct Radiation (area)	(s)
		Direct Radiation (air)	(s)
4	soil	Food (soil)	
5	soil	Direct Radiation (Volume)	
6	well water	Food (water)	(p)*
		Inhalation (soil)	(s)*
		Direct Radiation (area)	(s)
		Direct Radiation (air)	(s)
7	open water	Food (water)	(p)
		Fish (water)	(p)
		Inhalation (soil)	(s)
		Direct Radiation (area)	(s)
		Direct Radiation (air)	(s)

*PDCF-1 is used for exposures that last approximately for an entire year for several years (chronic exposures), while PDCF-2 is used for exposures that occur once for considerably less than a year (acute exposures).

**(p) = primary pathway, (s) = secondary pathway

000403

Table D-2. Biota Access Location-to-Human Pathway Descriptions

Pathway Designation	Description
Food (soil)	This uptake pathway includes a total of three subpathways and denotes uptake of radionuclides originating in plants via soil-to-root transfer from contaminated soil: plant-to-human plant-to-animal-to-human plant-to-animal-to-product-to-human
Food (air)	This uptake pathway includes a total of six subpathways and includes the above three food (soil) subpathways resulting from uptake of radionuclides originating on plant surfaces via deposition from contaminated air and the same three food (soil) subpathways resulting from fallout contamination of the ground.
Food (water)	This uptake pathway includes a total of nine subpathways and includes all the food (soil) pathways resulting from radionuclides originating on plant surfaces via irrigation deposition from contaminated water and from irrigation contamination of the ground. The following three subpathways in addition to the plant pathways are added: water-to-human water-to-animal-to-human water-to-animal-to-product-to-human
Ingestion (fish)	Uptake of radionuclides from eating fish caught in contaminated open water.
Inhalation (air)	Uptake of radionuclides from breathing air contaminated due to suspension of contaminated soil particulates by human activities.
Inhalation (soil)	Uptake of radionuclides from breathing air contaminated due to natural suspension and volatilization of surface soil.
Direct Radiation (volume)	Direct exposure to ionizing radiation from standing on ground homogeneously contaminated.
Direct Radiation (area)	Direct exposure to ionizing radiation from standing on ground whose surface is contaminated.
Direct Radiation (air)	Direct exposure to ionizing radiation from standing in air homogeneously contaminated.

PDCF-6 and PDCF-7 are used to determine impacts due to use of contaminated water. Pathways include direct consumption of water as well as use of the water as irrigation. Consumption of watered crops is considered as well as resuspension of contaminated dust particules from irrigated ground surfaces. PDCF-7 differs from PFCF-6 in that PDCF-7 is used for exposures involving open water bodies such as a stream while PDCF-6 is used for well water applications. PDCF-7 has an added pathway involving consumption of fish.

The PDCF's used in this report are generic. That is, they are constructed assuming a set of parameters typical of many environmental conditions and human actions. Different assumptions could be incorporated depending upon site-specific environmental conditions. In addition, all PDCF's are calculated assuming that the exposure period lasts for a total year. Many exposures, however, are acute and last for considerably less than a year. For such acute exposures a correction factor used to normalize acute exposures to the one-year reference value is incorporated into the calculations. This correction factor is generally termed the exposure duration factor (EDF) in the main body of this report.

D.2 CALCULATIONAL PROCEDURES

PDCF's are calculated based upon a number of sources. Equations used to calculate the PDCF's are mainly based upon References 1 and 2, and generally adopt the following generic form:

$$PDCF_{irps} = \sum_{i=1}^{N} C_{ips} \, f_{ips} \, DCF_{irp} \qquad (D\text{-}2)$$

where:

$PDCF_{irps}$ = the pathway dose conversion factor (50-year dose commitment in mrem/year) specific to organ (r), nuclide (i), pathway (p) and scenario (s);

N = the total number of pathways in the scenario;

C_{ips} = the concentration of nuclide (i) in the medium of pathway (p) via scenario (s) (in Ci/m^3);

f_{ips} = the pathway usage factor of nuclide (i) of pathway (p) via scenario (s) which is considered in the calculation of the accumulated radiation dose to man; and

DCF_{irp} = the fundamental dose conversion factor, a value specific to a given nuclide (i), pathway (p), and organ (r) which is used to calculate radiation dose commitments.

The specific equations used to calculate the PDCF's are summarized in Table D-3. In the table, the components of each equation are first separated into each individual pathway comprising the PDCF, and then the equation for the PDCF is summarized.

000405

Table D-3. Equations Used to Calculate Pathway Dose Conversion Factors

PDCF	Uptake Pathways	Pathway Equations
1	Inhalation (air)	$C_a*f_{15}*DCF2$
	Direct Radiation (air)	$C_a*f_{15}*DCF5$
	Inhalation (soil)	$C_a*D_1*f_{18}*f_{14}*f_{15}*DCF2$
	Direct Radiation (area)	$C_a*D_1*f_{18}*DCF4$
	Direct Radiation (air)	$C_a*D_1*f_{18}*f_{14}*DCF5$

$$PDCF\text{-}1 = C_a*(f_{15}*DCF2 + DCF5) + C_a*D_1*f_{18}*(f_{14}*(f_{15}*DCF2 + DCF5) + DCF4) \quad \text{(D-3)}$$

2	Inhalation (air)	$C_a*f_{15}*DCF2$
	Direct Inhalation	$C_a*f_{15}*DCF5$
	Inhalation (soil)	$C_a*D_1*f_{18}*f_{14}*f_{15}*DCF2*0.242$
	Direct Radiation (area)	$C_a*D_1*f_{18}*DCF4*0.242$
	Direct Radiation (air)	$C_a*D_1*f_{18}*f_{14}*DCF5*0.242$

$$PDCF\text{-}2 = C_a*(f_{15}*DCF2 + DCF5) + (C_a*D_1*f_{18}*(f_{14}*(f_{15}*DCF2 + DCF5) + DCF4)*0.242 \quad \text{(D-4)}$$

3	Inhalation (air)	$C_a*f_{15}*DCF2$
	Direct Radiation (air)	$C_a*f_{15}*DCF5$
	Food (air)	$C_a*(D_1*PT + (D_2/CY)*F*PTP)*DCF1$
	Inhalation (soil)	$C_a*D_1*f_{18}*f_{14}*f_{15}*DCF2$
	Direct Radiation (area)	$C_a*D_1*f_{18}*DCF4$
	Direct Radiation (air)	$C_a*D_1*f_{18}*f_{14}*DCF5$

$$PDCF\text{-}3 = C_a*(f_{15}*DCF2 + DCF5) + C_a*(D_1*PT + D_2/CY)*F*PTP)*DCF1 + C_a*D_1*f_{18}*(f_{14}*(f_{15}*DCF2 + DCF5) + DCF4) \quad \text{(D-5)}$$

Table D-3 (Continued)

PDCF	Uptake Pathways	Pathway Equations
4	Food (soil)	C_s*(PT/D)*DCF1

PDCF-4 = C_s*(PT/D)*DCF1 (D-6)

5	Direct Radiation (Volume)	C_s*DCF3

PDCF-5 = C_s*DCF3 (D-7)

6	Food (water)	C_w*(W_1*PT + (W_2/CY)*PTP + FT/1000)*DCF1
	Inhalation (soil)	C_w*W_1*f_{18}*f_{14}*f_{15}*DCF2
	Direct Radiation (area)	C_w*W_1*f_{18}*DCF4
	Direct Radiation (air)	C_w*W_1*f_{18}*f_{14}*DCF5

PDCF-6 = C_w(W_1*PT + (W_2/CY)*PTP + FT/1000)*DCF1 (D-8)
+ C_w*W_1*F_{18}* (f_{14}*(f_{15}*DCF2 + DCF5) + DCF4)

7	Food (water)	C_w*(W_1PT + (W_2/CY)*PTP + FT/1000)*DCF1
	Fish (water)	C_w*(F_{12}/1000)*DCF1
	Inhalation (soil)	C_w*W_1*f_{18}*f_{14}*f_{15}*DCF2
	Direct Radiation (area)	C_w*W_1*f_{18}*DCF4
	Direct Radiation (air)	C_w*W_1*f_{18}*f_{14}*DCF5

PDCF-7 = C_w(W_1*PT + (W_2/CY)*PTP + FT/1000)*DCF1 (D-9)
+ C_w(F_{12}/1000)*DCF1
+ C_w*W_1*f_{18}* (f_{14}* (f_{15}*DCF2 + DCF5) + DCF4

000407

In the equations, the parameters can be aggregated into three groups: those parameters involving the initial concentration of a radionuclide at a biota access location, those parameters involving fundamental dose conversion factors, and those parameters involving translocation parameters. The initial concentration of a nuclide is given as unity for each biota access location -- i.e.:

Symbol	Definition	Units
C_a	Initial air concentration	1 Ci/m^3
C_s	Initial soil concentration	1 Ci/m^3
C_w	Initial water concentration	1 Ci/m^3

The other parameters are discussed below following a summary of the radionuclides considered in this study.

D.2.1 Radionuclides Considered

A total of 85 radionuclides are considered in this report, and these radionuclides are listed in Table D-4, along with the radionuclides half lives and default solubility classes. Default solubility classes are used in the computer codes in two situations as discussed in Chapter 8 of this report. First, the default solubility classes are used in the INVIMPS code to determine limiting radionuclide concentrations for the different radiological impact scenarios. The user of the INVIMPS code, however, may easily specify use of alternative solubility classes for particular radionuclides. Second, in both the IMPACTS and the INVIMPS codes the effects of radionuclide decay chains are considered in a manner very similar to that in Reference 23. The default solubility classes are used to determine the impacts of radionuclide daughter ingrowth, unless alternative solubility classes for the daughters are specified by the user of the codes.

Table D-5 lists all the elemental solubility classes considered in this report, as well as typical chemical forms appropriate to each solubility class. The information on chemical forms was obtained from Reference 3.

D.2.2 Fundamental Dose Conversion Factors

All the PDCF's are based upon five sets of fundamental dose conversion factors (DCF). These include DCF's for 50-year committed inhalation dose in units of mrem per pCi inhaled, 50-year committed ingestion dose in units of mrem per pCi ingested, and three sets of DCF's for direct radiation exposure applications. The use of these last three DCF's depends upon the particular biota access location considered, and include factors for volume contamination of soil (mrem/yr per pCi/m^3), surface contamination of soil or other material (mrem/yr per pCi/m^2), and air contamination (mrem/yr per pCi/m^3). The values of these fundamental DCF's are a function of the radionuclide of concern, the solubility

Table D-4. Radionuclides Considered in Report

Isotope	Sol.	Half-life (years)	Isotope	Sol.	Half-life (years)	Isotope	Sol.	Half-life (years)
H-3	*	12.3	Tc-99m	W	6.91E-4	Ac-227	Y	21.6
C-14	*	5.730	Ru-103	Y	1.08E-1	Th-228	Y	1.19
Na-22	D	2.62	Ru-106	Y	1.01	Th-229	Y	7,340
P-32	W	3.91E-2	Ag-108m	Y	5	Th-230	Y	8.0E+4
P-33	W	6.68E-2	Ag-110m	Y	6.99E-1	Th-232	Y	1.41E+10
S-35	W	2.41E-1	Cd-109	Y	1.24	Pu-231	Y	3.25E+4
Cl-36	W	3.08E+5	Sn-113	W	3.15E-1	U-232	Y	72
Ca-45	W	4.52E-1	Sn-126	W	1.0E+5	U-233	Y	1.62E+5
Sc-46	Y	2.30E-1	Sb-124	W	1.65E-1	U-234	Y	2.47E+5
Cr-51	Y	7.62E-2	Sb-125	W	2.71	U-235	Y	7.1E+8
Mn-54	W	8.30E-1	I-125	D	1.65E-1	U-236	Y	2.39E+7
Fe-55	Y	2.60	I-129	D	1.17E+7	U-238	Y	4.51E+9
Fe-59	Y	1.25E-1	I-131	D	2.21E-2	Np-237	Y	2.14E+6
Co-57	Y	7.40E-1	Cs-134	D	2.046	Pu-236	Y	2.85
Co-58	Y	1.95E-1	Cs-135	D	3.0E+6	Pu-238	Y	86.4
Co-60	Y	5.26	Cs-136	D	3.75E-2	Pu-239	Y	2.44E+4
Ni-59	W	8.0E+4	Cs-137	D	30.0	Pu-240	Y	6,580
Ni-63	W	92	Ba-140	W	3.51E-2	Pu-241	Y	13.2
Zn-65	Y	6.71E-1	La-140	Y	4.59E-3	Pu-242	Y	3.79E+5
Se-75	W	3.30E-1	Ce-141	Y	8.90E-2	Pu-244	Y	7.6E+7
Rb-86	D	5.11E-2	Ce-144	Y	7.78E-1	Am-241	Y	458
Sr-85	Y	1.75E-1	Eu-152	W	12.7	Am-243	Y	7,950
Sr-89	Y	1.44E-1	Eu-154	W	16	Cm-242	Y	4.45E-1
Sr-90	Y	28.1	Yb-169	Y	8.71E-2	Cm-244	Y	17.6
Zr-95	Y	1.79E-1	Pb-210	W	20.4	Cm-243	Y	32
Nb-94	Y	2.0E+4	Po-210	W	3.79E-1	Cm-248	Y	4.75E+5
Nb-95	Y	9.59E-2	Rn-222	*	1.05E-2	Cf-252	Y	2.646
Mo-99	Y	7.61E-3	Ra-228	W	6.7			
Tc-99	W	2.12E+5	Ra-226	W	1,602			

000409

Table D-5. Element Solubility Classes

Element	Solubility Class	Compounds
H	*	All compounds
C	*	All compounds
Na	D	All compounds
P	W	Some phosphates
	D	Most phosphorus compounds
S	W	Elemental sulphur
	D	Information not provided
Cl	W	Information not provided
	D	Information not provided
Ca	W	All compounds
Sc	Y	Information not provided
Cr	Y	Oxides and hydroxides
	D	All other compounds
Mn	W	Oxides, hydroxides, halides and nitrates
	D	All other compounds
Fe	W	Oxides, hydroxides and halides
	D	All other compounds
Co	Y	Oxides, hydroxides, halides and nitrates
	W	All other compounds
Ni	W	Oxides, hydroxides, halides, nitrates and carbides
	D	All other compounds
Zn	Y	Oxides, hydroxides, phosphates and nitrates
	W	Halides and sulphides
	D	Sulphates
Se	W	Elemental selenium, oxides, and hydroxides
	D	All other compounds
Rb	D	All compounds
Sr	Y	Strontium titanate
	W	All other compounds
Zr	Y	Zirconium carbide
	W	Oxides, hydroxides, halides and nitrates
	D	All other compounds
Nb	Y	Oxides and hydroxides
	W	All other compounds
Mo	Y	Molybdenum, sulphide, oxides and hydroxides
	D	All other compounds
Tc	W	Oxides, hydroxides, halides and nitrates
	D	All other compounds
Ru	Y	Oxides and hydroxides
	W	Halides
	D	All other compounds
Cd	Y	Oxides and hydroxides
	W	Sulphides, halides and nitrates
	D	All other compounds

Table D-5 (Continued)

Element	Solubility Class	Compounds
Ag	Y	Oxides and hydroxides
	W	Nitrates and sulphides
	D	Silver metal and all other compounds
Sn	W	Sulphides, oxides, hydroxides, halides, nitrates and stannic compounds
	D	All other compounds
Sb	W	Oxides, hydroxides, sulphides, sulphates, carbonates, nitrates, and halides
	D	All other compounds
I	D	All compounds
Cs	D	All compounds
Ba	D	All compounds
La	Y	Oxides, hydroxides and fluorides
	W	All other compounds
Ce	Y	Oxides, hydroxides and fluorides
	W	All other compounds
Eu	Y	Oxides, hydroxides, carbides and fluorides
	W	All other compounds
Yb	Y	Oxides, hydroxides, carbides, and fluorides
	W	All other compounds
Pb	D	All compounds
Po	W	Oxides, hydroxides and nitrates
	D	All other compounds
Rn	*	All compounds
Ra	W	All compounds
Ac	W	All compounds
Th	Y	Oxides and hydroxides
	W	All other compounds
Pa	W	All compounds
U	D	Most hexavalent uranium compounds
	W	Most tetravalent uranium compounds
	Y	UO_2 and U_3O_8
Np	W	All compounds
Pu	Y	Plutonium dioxide
	W	All other compounds
Am	W	All compounds
Cm	W	All compounds
Cf	Y	Oxides and hydroxides
	W	All other compounds

000111

class, and the organ receiving the dose. The DCF's are given in terms of nine organs (whole body, red bone marrow, bone surface, liver, thyroid, kidney, lung, stomach wall, lower large intestine) plus the effective whole body dose equivalent, and are listed in Table D-6 through D-10 according to the following schedule:

Symbol	Definition	Units	Table
DCF1	Fundamental DCF for Ingestion	mrem/yr per pCi	D-6
DCF2	Fundamental DCF for Inhalation	mrem/yr per pCi	D-7
DCF3	Fundamental DCF for External Exposure (Volume Source)	mrem/yr per pCi/m^3	D-8
DCF4	Fundamental DCF for External Exposure (Area Source)	mrem/yr per pCi/m^2	D-9
DCF5	Fundamental DCF for External Exposure (Air Immersion)	mrem/yr per pCi/m^3	D-10

A brief description of each fundamental DCF follows.

Ingestion DCF (DCF1). Ingestion dose conversion factors (50-year committed dose) for this report were principally obtained from Reference 4. DCF's for some radionuclides of interest, however, were not listed in Reference 4, and so DCF's for these nuclides were filled in based upon information obtained from References 5 and 6. All ingestion DCF's are based upon more recent models for radionuclide transfer within the human body as presented by the International Commission on Radiological Protection (ICRP) in ICRP-30 (Ref. 7). A quality factor of 20 is assumed for alpha-emitting radionuclides.

Inhalation DCF (DCF2). The inhalation fundamental dose conversion factors (50-year committed dose) are based on a model originally published by the ICRP Task Group on Lung Dynamics in 1966 (Ref. 8). More recent versions of the basic model, however, are incorporated based upon ICRP-30. Similarly to the ingestion of DCF's, Reference 4 was used as a source for most of the 85 radionuclides considered. DCF's for radionuclides not listed in Reference 4 were obtained by consulting references 5 and 6. A medium aerodynamic diameter of one micron is assumed for particulates, and a quality factor of 20 is assumed for alpha-emitting radionuclides.

Direct radiation (volume) DCF (DCF3). DCF3 is used to estimate exposures due to gamma radiation emitted by radionuclides homogeneously distributed through soil, and in which the contaminated soil extends horizontally and downward to infinity (i.e., an infinite slab source). This dose conversion factor has been developed from exposure rate data presented in HASL-195 for K-40, natural uranium, and thorium plus daughters uniformly distributed in soil (Ref. 9). Table 2 of Reference 9 presents the exposure rate data as a function of gamma energy and height above soil, and this table has been used to construct a graph of exposure rate as a function of gamma energy. This graph is presented as Figure D.1 for a distance of one meter above the soil surface. Use of the graph allows the effects of self-shielding and buildup to be intrinsically considered in the calculations.

TABLE D-6 . DCF1: Fundamental Dose Conversion Factor for Ingestion (mrem/pCi)

Nuclide and Solubility	Lung	Stomach Wall	LLI Wall	Total Body	Kidneys	Liver	Red Marrow	Bone	Thyroid	ICRP
• H-3	8.36E-08	1.08E-07	1.43E-07	8.30E-08	8.56E-08	8.28E-08	8.26E-08	6.56E-08	8.28E-08	8.98E-08
• C-14	8.49E-07	1.21E-06	1.46E-06	1.92E-06	1.06E-06	1.23E-06	3.38E-06	7.05E-06	8.89E-07	1.54E-06
D Na-22	2.57E-05	1.04E-05	1.35E-05	1.36E-05	1.49E-05	1.40E-05	1.95E-05	2.50E-05	1.21E-05	1.86E-05
D P-32	4.06E-06	3.00E-06	2.45E-05	4.70E-06	4.01E-06	4.02E-06	1.48E-05	2.70E-05	4.02E-06	7.51E-06
W P-32	4.06E-06	3.00E-06	2.45E-05	4.70E-06	4.01E-06	4.02E-06	1.48E-05	2.70E-05	4.02E-06	7.51E-06
D P-33	3.47E-07	6.73E-07	3.13E-06	1.11E-06	3.47E-07	3.47E-07	1.85E-06	4.88E-06	3.47E-07	9.18E-07
W P-33	3.47E-07	6.73E-07	3.13E-06	1.11E-06	3.47E-07	3.47E-07	1.85E-06	4.88E-06	3.47E-07	9.18E-07
D S-35	2.82E-07	4.92E-07	2.11E-06	4.47E-07	2.82E-07	2.82E-07	7.63E-11	2.82E-07	2.82E-07	4.48E-07
W S-35	2.82E-07	4.92E-07	2.11E-06	4.47E-07	2.82E-07	2.82E-07	7.63E-11	2.82E-07	2.82E-07	4.48E-07
D Cl-36	2.96E-06	4.11E-06	2.96E-06	3.06E-06	2.96E-06	2.96E-06	2.96E-06	2.96E-06	2.96E-06	3.03E-06
W Cl-36	2.96E-06	4.11E-06	2.96E-06	3.06E-06	2.96E-06	2.96E-06	2.96E-06	2.96E-06	2.96E-06	3.03E-06
W Ca-45	1.98E-07	5.29E-07	1.04E-05	4.28E-06	1.98E-07	1.98E-07	1.28E-05	1.94E-05	1.98E-07	3.16E-06
Y Sc-46	1.80E-07	2.53E-06	3.85E-05	5.73E-06	1.05E-06	7.47E-07	1.49E-06	5.14E-07	2.85E-08	6.40E-06
D Cr-51	1.62E-08	6.70E-08	9.18E-07	1.39E-07	3.14E-08	2.59E-08	4.63E-08	2.91E-08	1.37E-08	1.32E-07
W Cr-51	1.62E-08	6.70E-08	9.18E-07	1.39E-07	3.14E-08	2.59E-08	4.63E-08	2.91E-08	1.37E-08	1.32E-07
Y Cr-51	1.62E-08	6.70E-08	9.18E-07	1.39E-07	3.14E-08	2.59E-08	4.63E-08	2.91E-08	1.37E-08	1.32E-07
D Mn-54	2.32E-06	1.44E-06	7.99E-06	1.23E-06	1.46E-06	3.68E-06	1.76E-06	1.36E-06	4.64E-07	3.01E-06
W Mn-54	2.32E-06	1.44E-06	7.99E-06	1.23E-06	1.46E-06	3.68E-06	1.76E-06	1.36E-06	4.64E-07	3.01E-06
W Fe-55	7.10E-07	1.84E-08	7.08E-07	3.50E-07	6.44E-07	1.22E-06	6.41E-07	4.37E-07	6.32E-07	7.79E-07
Y Fe-55	7.10E-07	1.84E-08	7.08E-07	3.50E-07	6.44E-07	1.22E-06	6.41E-07	4.37E-07	6.32E-07	7.79E-07
W Fe-59	6.08E-06	3.33E-06	3.02E-05	2.94E-06	4.04E-06	5.65E-06	3.69E-06	3.09E-06	2.47E-06	7.56E-06
Y Fe-59	6.08E-06	3.33E-06	3.02E-05	2.94E-06	4.04E-06	5.65E-06	3.69E-06	3.09E-06	2.47E-06	7.56E-06
W Co-57	2.98E-07	2.85E-07	4.56E-06	1.84E-07	2.12E-07	2.53E-07	3.57E-07	1.78E-07	1.10E-07	7.78E-07
Y Co-57	2.98E-07	2.85E-07	4.56E-06	1.84E-07	2.12E-07	2.53E-07	3.57E-07	1.78E-07	1.10E-07	7.78E-07
W Co-58	1.05E-06	1.35E-06	1.45E-05	7.65E-07	7.74E-07	7.73E-07	9.67E-07	4.58E-07	2.20E-07	3.10E-06
Y Co-58	1.05E-06	1.35E-06	1.45E-05	7.65E-07	7.74E-07	7.73E-07	9.67E-07	4.58E-07	2.20E-07	3.10E-06
W Co-60	8.62E-06	5.30E-06	4.02E-05	4.37E-06	5.67E-06	6.83E-06	5.42E-06	3.99E-06	3.10E-07	1.13E-05
Y Co-60	8.62E-06	5.30E-06	4.02E-05	4.37E-06	5.67E-06	6.83E-06	5.42E-06	3.99E-06	3.10E-07	1.13E-05
D Ni-59	1.30E-07	1.52E-07	9.99E-07	2.10E-07	1.32E-07	1.32E-07	1.35E-07	1.34E-07	1.44E-07	2.10E-07
W Ni-59	1.30E-07	1.52E-07	9.99E-07	2.10E-07	1.32E-07	1.32E-07	1.35E-07	1.34E-07	1.44E-07	2.10E-07
D Ni-63	3.15E-07	3.89E-07	3.40E-06	5.77E-07	3.15E-07	3.15E-07	3.15E-07	3.15E-07	3.15E-07	5.77E-07
W Ni-63	3.15E-07	3.89E-07	3.40E-06	5.77E-07	3.15E-07	3.15E-07	3.15E-07	3.15E-07	3.15E-07	5.77E-07
D Zn-65	2.84E-05	1.05E-05	1.51E-05	1.26E-05	1.69E-05	1.67E-05	1.73E-05	1.58E-05	1.12E-05	1.93E-05
W Zn-65	2.84E-05	1.05E-05	1.51E-05	1.26E-05	1.69E-05	1.67E-05	1.73E-05	1.58E-05	1.12E-05	1.93E-05
Y Zn-65	2.84E-05	1.05E-05	1.51E-05	1.26E-05	1.69E-05	1.67E-05	1.73E-05	1.58E-04	1.12E-05	1.93E-05
D Se-75	6.14E-06	8.07E-06	7.29E-06	1.02E-05	2.65E-05	2.12E-05	7.66E-06	6.29E-06	4.18E-06	9.62E-06
W Se-75	6.14E-06	8.07E-06	7.29E-06	1.02E-05	2.65E-05	2.12E-05	7.66E-06	6.29E-06	4.18E-06	9.62E-06
D Pb-86	1.74E-05	3.29E-06	6.46E-06	1.00E-05	1.69E-05	1.69E-05	1.68E-05	1.67E-05	1.67E-05	1.71E-05
D Sr-85	7.62E-07	1.14E-06	5.55E-06	1.86E-06	9.40E-07	8.03E-07	2.21E-06	2.24E-06	7.59E-07	1.98E-06
Y Sr-85	6.18E-08	6.44E-07	6.73E-06	1.23E-06	2.86E-07	2.05E-07	4.81E-07	2.11E-07	3.01E-08	1.49E-06
D Sr-89	8.55E-07	2.49E-06	8.67E-05	1.80E-06	8.55E-07	8.55E-07	5.23E-06	1.08E-05	8.55E-07	8.87E-06
Y Sr-89	4.28E-08	2.49E-06	1.10E-04	4.87E-07	4.28E-08	4.28E-08	2.61E-07	5.38E-07	4.27E-08	9.17E-06
D Sr-90	5.99E-06	8.76E-07	7.78E-05	9.45E-05	5.99E-06	5.71E-06	4.30E-04	8.60E-04	5.99E-06	8.75E-05
Y Sr-90	3.00E-07	8.76E-07	9.60E-05	5.02E-06	3.00E-07	2.86E-07	2.15E-05	4.30E-05	3.00E-07	1.13E-05
W Zr-95	4.73E-07	1.31E-06	2.86E-05	5.45E-07	4.18E-07	2.95E-07	6.62E-07	3.30E-07	3.22E-08	3.75E-06
Y Zr-95	4.73E-07	1.31E-06	2.86E-05	5.45E-07	4.18E-07	2.95E-07	6.62E-07	3.30E-07	3.22E-08	3.75E-06
W Nb-94	6.36E-07	2.85E-06	4.63E-05	7.14E-06	2.57E-06	1.04E-06	2.73E-06	2.83E-06	4.55E-07	7.14E-06
Y Nb-94	6.36E-07	2.85E-06	4.63E-05	7.14E-06	2.57E-06	1.04E-06	2.73E-06	2.83E-06	4.55E-07	7.14E-06
Y Nb-95	5.23E-07	1.03E-06	1.46E-05	5.04E-07	4.99E-07	3.17E-07	6.74E-07	3.22E-07	4.71E-08	2.58E-06
D Mo-99	1.24E-06	2.00E-06	2.84E-06	1.18E-06	1.35E-05	2.27E-05	1.14E-06	1.84E-06	5.25E-07	3.20E-06
Y Mo-99	1.76E-07	1.90E-06	5.00E-05	3.76E-07	7.88E-07	1.23E-06	2.51E-07	1.60E-07	1.36E-07	4.99E-06
D Tc-99	3.17E-07	9.30E-07	3.20E-06	2.14E-07	4.58E-07	6.28E-07	3.22E-07	4.10E-07	1.41E-05	1.02E-06
W Tc-99	3.17E-07	9.30E-07	3.20E-06	2.14E-07	4.58E-07	6.28E-07	3.22E-07	4.10E-07	1.41E-05	1.02E-06
D Tc-99m	4.38E-08	1.30E-07	8.84E-08	1.54E-08	2.45E-08	2.76E-08	2.61E-08	1.63E-08	2.19E-07	5.78E-08
W Tc-99m	4.38E-08	1.30E-07	8.84E-08	1.54E-08	2.45E-08	2.76E-08	2.61E-08	1.63E-08	2.19E-07	5.78E-08
Y Ru-103	6.79E-07	1.01E-06	2.41E-05	5.29E-07	5.28E-07	4.67E-07	6.52E-07	3.96E-07	2.53E-07	3.11E-06
Y Ru-106	8.51E-06	6.41E-06	2.60E-04	5.94E-06	8.25E-06	8.27E-06	8.31E-06	9.57E-06	8.06E-06	2.88E-05
D Ag-108	2.23E-06	3.85E-06	2.84E-05	7.62E-06	3.92E-06	2.55E-05	2.45E-06	1.31E-06	4.81E-07	7.62E-06
W Ag-108	2.23E-06	3.85E-06	2.84E-05	7.62E-06	3.92E-06	2.55E-05	2.45E-06	1.31E-06	4.81E-07	7.62E-06
Y Ag-108	2.23E-06	3.85E-06	2.84E-05	7.62E-06	3.92E-06	2.55E-05	2.45E-06	1.31E-06	4.81E-07	7.62E-06
D Ag-110	3.07E-06	5.55E-06	4.00E-05	1.08E-05	5.55E-06	3.19E-05	3.49E-06	1.82E-06	6.70E-07	1.08E-05
W Ag-110	3.07E-06	5.55E-06	4.00E-05	1.09E-05	5.55E-06	3.19E-05	3.49E-06	1.82E-06	6.70E-07	1.08E-05
Y Ag-110	3.07E-06	5.55E-06	4.00E-05	1.08E-05	5.55E-06	3.19E-05	3.49E-06	1.82E-06	6.70E-07	1.08E-05
D Cd-109	1.17E-06	1.51E-06	1.71E-05	1.82E-05	1.51E-04	2.73E-05	1.37E-06	1.21E-06	1.02E-06	1.31E-05
W Cd-109	1.17E-06	1.51E-06	1.71E-05	1.82E-05	1.51E-04	2.73E-05	1.37E-06	1.21E-06	1.02E-06	1.31E-05
Y Cd-109	1.17E-06	1.51E-06	1.71E-05	1.82E-05	1.51E-04	2.73E-05	1.37E-06	1.21E-06	1.02E-06	1.31E-05
D Sn-113	9.40E-08	5.29E-07	2.93E-05	3.08E-06	2.04E-07	1.61E-07	6.59E-07	8.66E-07	7.99E-08	3.08E-06
W Sn-113	9.40E-08	5.29E-07	2.93E-05	3.08E-06	2.04E-07	1.61E-07	6.59E-07	8.66E-07	7.99E-08	3.08E-06
D Sn-126	2.22E-06	5.92E-06	1.60E-04	1.95E-05	3.03E-06	2.53E-06	1.01E-05	1.87E-05	2.04E-06	1.95E-05
W Sn-126	2.22E-06	5.92E-06	1.60E-04	1.95E-05	3.03E-06	2.53E-06	1.01E-05	1.87E-05	2.04E-06	1.95E-05
D Sb-124	6.11E-07	3.92E-06	7.88E-05	9.81E-06	1.35E-06	2.42E-06	2.28E-06	2.96E-06	4.37E-07	9.81E-06
W Sb-124	2.00E-07	3.50E-06	8.62E-05	1.01E-05	9.44E-07	8.07E-07	1.41E-06	6.99E-07	6.51E-08	1.01E-05
D Sb-125	2.23E-07	1.10E-06	2.14E-05	2.81E-06	4.18E-07	9.21E-07	8.36E-07	2.17E-06	1.71E-07	2.81E-06
W Sb-125	5.03E-08	9.51E-07	2.33E-05	2.80E-06	2.43E-07	2.32E-07	4.48E-07	3.35E-07	2.06E-08	2.80E-06
D I-125	1.51E-07	2.52E-07	1.10E-07	5.59E-05	1.00E-07	1.09E-07	2.52E-07	2.45E-07	1.27E-03	3.85E-05
D I-129	8.21E-07	7.84E-08	6.70E-08	3.18E-06	7.02E-07	7.24E-07	9.42E-07	8.79E-07	7.80E-03	2.34E-04
D I-131	3.69E-07	1.14E-07	5.32E-08	9.08E-07	2.15E-07	2.45E-07	2.94E-07	3.32E-07	1.80E-03	5.45E-05
D Cs-134	1.60E-04	4.99E-05	5.75E-05	6.84E-05	1.00E-04	1.00E-04	9.26E-05	8.86E-05	7.81E-05	1.12E-04
D Cs-135	1.12E-05	2.40E-07	5.35E-07	6.61E-06	1.12E-05	1.12E-05	1.12E-05	1.30E-05	1.13E-05	1.13E-05
D Cs-136	2.14E-05	8.44E-06	1.01E-05	9.05E-06	1.32E-05	1.36E-05	1.20E-05	1.08E-05	9.55E-06	1.41E-05

000413

TABLE D-6 . DCF1 (Continued)

Nuclide and Solubility	Lung	Stomach Wall	LLI Wall	Total Body	Kidneys	Liver	Red Marrow	Bone	Thyroid	ICRP
D Cs-137	1.00E-04	2.18E-05	2.59E-05	4.91E-05	7.73E-05	7.87E-05	7.38E-05	7.99E-05	6.72E-05	8.19E-05
D Ba-140	9.18E-07	2.10E-06	9.95E-05	1.11E-06	6.05E-07	4.68E-07	1.34E-06	1.26E-06	3.97E-07	9.64E-06
W La-140	9.39E-07	4.04E-06	6.58E-05	1.04E-06	8.10E-07	5.90E-07	1.02E-06	3.52E-07	2.27E-08	8.62E-06
Y Ce-141	4.92E-08	8.22E-07	3.18E-05	1.72E-07	4.68E-08	4.11E-08	1.22E-07	3.98E-08	3.74E-10	2.89E-06
W Ce-141	4.92E-08	8.22E-07	3.18E-05	1.72E-07	4.68E-08	4.11E-08	1.22E-07	3.98E-08	3.74E-10	2.89E-06
D Ce-141	4.92E-08	8.22E-07	3.18E-05	1.72E-07	4.68E-08	4.11E-08	1.22E-07	3.98E-08	3.74E-10	2.89E-06
Y Ce-144	3.49E-08	2.05E-06	4.28E-05	3.03E-07	1.04E-07	7.59E-08	1.37E-07	1.47E-07	4.41E-09	2.09E-05
W Ce-144	3.49E-08	2.05E-06	4.28E-05	3.03E-07	1.04E-07	7.59E-08	1.37E-07	1.47E-07	4.41E-09	2.09E-05
D Ce-144	3.49E-08	2.05E-06	4.28E-05	3.03E-07	1.04E-07	7.59E-08	1.37E-07	1.47E-07	4.41E-09	2.09E-05
W Eu-152	8.88E-07	2.38E-06	3.70E-05	6.48E-06	1.72E-06	1.11E-05	3.40E-06	7.73E-06	2.46E-07	6.48E-06
W Eu-154	7.99E-07	3.03E-06	6.66E-05	9.55E-06	1.66E-06	1.37E-05	4.26E-06	1.65E-05	2.11E-07	9.55E-06
W Yb-169	1.80E-08	9.66E-07	2.63E-05	3.12E-06	1.81E-07	1.24E-07	6.14E-07	2.71E-07	1.36E-09	3.00E-06
Y Yb-169	1.80E-08	9.66E-07	2.63E-05	3.12E-06	1.81E-07	1.24E-07	6.14E-07	2.71E-07	1.36E-09	3.00E-06
W Pb-210	3.00E-04	1.95E-07	2.03E-05	1.70E-03	9.40E-04	1.40E-03	1.00E-03	9.60E-03	3.00E-04	7.77E-04
W Po-210	5.20E-04	4.54E-06	1.80E-04	4.10E-04	9.30E-03	1.60E-03	5.40E-04	2.40E-04	5.20E-04	2.04E-03
D Po-210	5.20E-04	4.54E-06	1.80E-04	4.10E-04	9.30E-03	1.60E-03	5.40E-04	2.40E-04	5.20E-04	2.04E-03
* Rn-222	0.00E+00	0.00E+00	0.00E+00	0.00E+00	0.00E+00	0.00E+00	0.00E+00	0.00E+00	0.00E+00	0.00E+00
W Ra-226	5.90E-04	5.37E-06	3.30E-04	3.40E-03	5.90E-04	5.90E-04	2.20E-03	2.00E-02	5.90E-04	1.38E-03
W Ra-228	4.10E-04	2.34E-06	7.14E-05	1.70E-03	4.00E-04	4.00E-04	1.30E-03	9.80E-03	4.00E-04	7.89E-04
Y Ac-227	1.10E-04	3.73E-07	2.48E-05	1.30E-03	2.00E-03	1.60E-02	1.00E-02	1.00E-01	1.10E-04	5.52E-03
W Ac-227	1.10E-04	3.73E-07	2.48E-05	1.30E-03	2.00E-03	1.60E-02	1.00E-02	1.00E-01	1.10E-04	5.52E-03
Y Th-228	7.50E-06	4.91E-06	4.70E-04	3.80E-05	7.88E-06	2.34E-05	3.80E-04	4.10E-03	7.42E-06	2.10E-04
W Th-228	7.50E-06	4.91E-06	4.70E-04	3.80E-05	7.88E-06	2.34E-05	3.80E-04	4.10E-03	7.42E-06	2.10E-04
Y Th-229	1.01E-05	4.88E-06	2.10E-04	2.30E-04	9.44E-06	3.64E-05	2.60E-03	3.20E-02	9.39E-06	1.29E-03
W Th-229	1.01E-05	4.88E-06	2.10E-04	2.30E-04	9.44E-06	3.64E-05	2.60E-03	3.20E-02	9.39E-06	1.29E-03
Y Th-230	4.56E-06	4.03E-06	1.80E-04	9.24E-05	4.31E-06	2.18E-05	1.00E-03	1.60E-02	4.56E-06	6.29E-04
W Th-230	4.56E-06	4.03E-06	1.80E-04	9.24E-05	4.31E-06	2.18E-05	1.00E-03	1.60E-02	4.56E-06	6.29E-04
Y Th-232	3.97E-06	3.47E-06	1.50E-04	9.63E-05	3.75E-06	1.88E-05	1.10E-03	1.80E-02	3.94E-06	6.92E-04
W Th-232	3.97E-06	3.47E-06	1.50E-04	9.63E-05	3.75E-06	1.88E-05	1.10E-03	1.80E-02	3.94E-06	6.92E-04
Y Pa-231	2.20E-04	4.70E-06	1.90E-04	2.10E-03	3.60E-03	2.80E-02	1.50E-02	1.78E-01	2.20E-04	9.55E-03
W Pa-231	2.20E-04	4.70E-06	1.90E-04	2.10E-03	3.60E-03	2.80E-02	1.50E-02	1.78E-01	2.20E-04	9.55E-03
Y U-232	1.30E-06	4.66E-06	2.00E-04	8.40E-05	1.30E-04	1.15E-06	7.10E-04	7.80E-03	1.21E-06	3.45E-04
W U-232	3.24E-05	6.42E-06	2.00E-04	2.10E-03	3.30E-03	2.86E-05	1.80E-02	1.95E-01	3.02E-05	8.19E-03
D U-232	3.24E-05	6.42E-06	2.00E-04	2.10E-03	3.30E-03	2.86E-05	1.80E-02	1.95E-01	3.02E-05	8.19E-03
Y U-233	6.95E-07	4.18E-06	1.80E-04	2.40E-05	6.78E-05	6.06E-07	9.60E-06	1.40E-04	6.39E-07	2.53E-05
W U-233	1.74E-05	5.51E-06	1.70E-04	5.80E-04	1.70E-03	1.51E-05	2.40E-04	3.50E-03	1.60E-05	2.61E-04
D U-233	1.74E-05	5.51E-06	1.70E-04	5.80E-04	1.70E-03	1.51E-05	2.40E-04	3.50E-03	1.60E-05	2.61E-04
Y U-234	6.87E-07	4.17E-06	1.80E-04	2.38E-05	6.69E-05	6.32E-07	9.34E-06	1.40E-04	6.32E-07	2.51E-05
W U-234	1.72E-05	5.48E-06	1.70E-04	5.80E-04	1.70E-03	1.58E-05	2.30E-04	3.50E-03	1.58E-05	2.57E-04
D U-234	1.72E-05	5.48E-06	1.70E-04	5.80E-04	1.70E-03	1.58E-05	2.30E-04	3.50E-03	1.58E-05	2.57E-04
Y U-235	7.44E-07	4.05E-06	1.90E-04	2.16E-05	6.05E-05	6.08E-07	7.38E-06	1.20E-04	5.80E-07	2.44E-05
W U-235	1.62E-05	5.37E-06	1.80E-04	5.20E-04	1.50E-03	1.38E-05	1.80E-04	2.90E-03	1.45E-05	2.24E-04
D U-235	1.62E-05	5.37E-06	1.80E-04	5.20E-04	1.50E-03	1.38E-05	1.80E-04	2.90E-03	1.45E-05	2.24E-04
Y U-236	6.47E-07	3.92E-06	1.70E-04	2.24E-05	6.32E-05	5.95E-07	8.03E-06	1.30E-04	5.95E-07	2.35E-05
W U-236	1.62E-05	5.16E-06	1.60E-04	5.40E-04	1.60E-03	1.49E-05	2.00E-04	3.10E-03	1.49E-05	2.37E-04
D U-236	1.62E-05	5.16E-06	1.60E-04	5.40E-04	1.60E-03	1.49E-05	2.00E-04	3.10E-03	1.49E-05	2.37E-04
Y U-238	6.14E-07	3.67E-06	1.70E-04	2.12E-05	5.96E-05	5.35E-07	7.65E-06	1.10E-04	5.63E-07	2.24E-05
W U-238	1.53E-05	4.85E-06	1.60E-04	5.10E-04	1.50E-03	1.34E-05	1.90E-04	2.80E-03	1.41E-05	2.20E-04
D U-238	1.53E-05	4.85E-06	1.60E-04	5.10E-04	1.50E-03	1.34E-05	1.90E-04	2.80E-03	1.41E-05	2.20E-04
Y Np-237	1.20E-04	5.24E-06	2.00E-04	1.00E-03	2.10E-03	1.60E-02	6.10E-03	8.70E-02	1.20E-04	4.69E-03
W Np-237	1.20E-04	5.24E-06	2.00E-04	1.00E-03	2.10E-03	1.60E-02	6.10E-03	8.70E-02	1.20E-04	4.69E-03
Y Pu-236	3.84E-07	4.96E-06	2.20E-04	4.48E-06	8.13E-06	6.28E-05	2.08E-05	2.40E-04	3.84E-07	3.31E-05
W Pu-236	3.84E-07	4.96E-06	2.20E-04	4.48E-06	8.13E-06	6.28E-05	2.08E-05	2.40E-04	3.84E-07	3.31E-05
Y Pu-238	3.23E-06	4.71E-06	2.10E-04	2.83E-05	5.72E-05	4.40E-04	1.70E-04	2.10E-03	3.23E-06	1.37E-04
W Pu-238	3.23E-06	4.71E-06	2.10E-04	2.83E-05	5.72E-05	4.40E-04	1.70E-04	2.10E-03	3.23E-06	1.37E-04
Y Pu-239	3.63E-06	4.42E-06	2.00E-04	3.13E-05	6.33E-05	4.90E-04	1.90E-04	2.60E-03	3.63E-06	1.57E-04
W Pu-239	3.63E-06	4.42E-06	2.00E-04	3.13E-05	6.33E-05	4.90E-04	1.90E-04	2.60E-03	3.63E-06	1.57E-04
Y Pu-240	3.62E-06	4.42E-06	2.00E-04	3.13E-05	6.32E-05	4.90E-04	1.90E-04	2.60E-03	3.62E-06	1.57E-04
W Pu-240	3.62E-06	4.42E-06	2.00E-04	3.13E-05	6.32E-05	4.90E-04	1.90E-04	2.60E-03	3.62E-06	1.57E-04
Y Pu-241	7.51E-08	2.23E-08	9.92E-07	6.19E-07	1.23E-06	9.50E-06	3.86E-06	4.83E-05	7.49E-08	2.79E-06
W Pu-241	7.51E-08	2.23E-08	9.92E-07	6.19E-07	1.23E-06	9.50E-06	3.86E-06	4.83E-05	7.49E-08	2.79E-06
Y Pu-242	3.45E-06	4.21E-06	1.90E-04	2.98E-05	6.01E-05	4.70E-04	1.80E-04	2.60E-03	3.45E-06	1.53E-04
W Pu-242	3.45E-06	4.21E-06	1.90E-04	2.98E-05	6.01E-05	4.70E-04	1.80E-04	2.60E-03	3.45E-06	1.53E-04
Y Pu-244	3.71E-06	4.68E-06	3.00E-04	3.01E-05	6.00E-05	4.60E-04	1.70E-04	2.60E-03	3.44E-06	1.62E-04
W Pu-244	3.71E-06	4.68E-06	3.00E-04	3.01E-05	6.00E-05	4.60E-04	1.70E-04	2.60E-03	3.44E-06	1.62E-04
Y Am-241	1.20E-04	4.85E-06	2.10E-04	1.00E-03	2.20E-03	1.70E-02	6.40E-03	8.00E-02	1.20E-04	4.59E-03
W Am-241	1.20E-04	4.85E-06	2.10E-04	1.00E-03	2.20E-03	1.70E-02	6.40E-03	8.00E-02	1.20E-04	4.59E-03
Y Am-243	1.30E-04	5.35E-06	2.20E-04	1.00E-03	2.20E-03	1.70E-02	6.40E-03	8.50E-02	1.30E-04	4.73E-03
W Am-243	1.30E-04	5.35E-06	2.20E-04	1.00E-03	2.20E-03	1.70E-02	6.40E-03	8.50E-02	1.30E-04	4.73E-03
Y Cm-242	2.72E-06	5.25E-06	2.30E-04	2.58E-05	5.72E-05	4.40E-04	1.40E-04	1.50E-03	2.72E-06	1.18E-04
W Cm-242	2.72E-06	5.25E-06	2.30E-04	2.58E-05	5.72E-05	4.40E-04	1.40E-04	1.50E-03	2.72E-06	1.18E-04
Y Cm-243	8.30E-05	5.92E-06	2.50E-04	7.10E-04	1.50E-03	1.20E-02	4.20E-03	4.80E-02	8.22E-05	2.92E-03
W Cm-243	8.30E-05	5.92E-06	2.50E-04	7.10E-04	1.50E-03	1.20E-02	4.20E-03	4.80E-02	8.22E-05	2.92E-03
Y Cm-244	6.40E-05	4.96E-06	2.20E-04	5.60E-04	1.20E-03	9.30E-03	3.30E-03	3.80E-02	6.40E-05	2.31E-03
W Cm-244	6.40E-05	4.96E-06	2.20E-04	5.60E-04	1.20E-03	9.30E-03	3.30E-03	3.80E-02	6.40E-05	2.31E-03
Y Cm-248	5.80E-04	7.80E-05	1.10E-03	4.00E-03	8.10E-03	6.30E-02	6.10E-03	8.80E-02	4.80E-04	8.70E-03
W Cm-248	5.80E-04	7.80E-05	1.10E-03	4.00E-03	8.10E-03	6.30E-02	6.10E-03	8.80E-02	4.80E-04	8.70E-03
Y Cf-252	3.28E-05	2.10E-05	5.70E-04	2.30E-04	5.20E-04	4.00E-03	6.50E-04	6.90E-03	2.51E-05	6.66E-04
W Cf-252	3.28E-05	2.10E-05	5.70E-04	2.30E-04	5.20E-04	4.00E-03	6.50E-04	6.90E-03	2.51E-05	6.66E-04

TABLE D-7 . DCF2: Fundamental Dose Conversion Factor for Inhalation (mrem/pCi)

Nuclide and Solubility	Lung	Stomach Wall	LLI Wall	Total Body	Kidneys	Liver	Red Marrow	Bone	Thyroid	ICRP
• H-3	1.25E-07	1.25E-07	1.33E-07	1.25E-07	1.29E-07	1.24E-07	1.24E-07	9.85E-08	1.24E-07	1.26E-07
• C-14	6.18E-09	7.35E-09	7.22E-09	1.41E-08	7.92E-09	8.88E-09	2.42E-08	5.08E-08	6.48E-09	1.09E-08
D Na-22	9.43E-06	6.22E-06	7.53E-06	9.16E-06	9.91E-06	9.45E-06	1.30E-05	1.67E-05	8.14E-06	1.14E-05
D P-32	7.63E-06	5.01E-07	3.91E-06	3.56E-06	3.00E-06	3.01E-06	1.11E-05	2.02E-05	3.01E-06	5.21E-06
W P-32	9.87E-05	1.28E-06	1.04E-05	3.87E-06	2.11E-06	2.11E-06	7.76E-06	1.42E-05	2.11E-06	1.56E-05
D P-33	1.10E-06	3.08E-07	6.85E-07	7.95E-07	2.58E-07	2.58E-07	1.37E-06	3.64E-06	2.58E-07	6.33E-07
W P-33	1.56E-05	3.29E-07	1.39E-06	3.27E-06	1.87E-07	1.87E-07	9.95E-07	2.65E-06	1.87E-07	2.32E-06
D S-35	7.55E-07	2.43E-07	4.92E-07	3.37E-07	2.11E-07	2.11E-07	2.11E-07	2.11E-07	2.11E-07	3.02E-07
W S-35	1.88E-05	2.66E-07	1.03E-06	3.52E-06	1.68E-07	1.68E-07	1.68E-07	1.68E-07	1.68E-07	2.48E-06
D Cl-36	4.92E-06	2.04E-06	1.86E-06	2.41E-06	1.86E-06	1.86E-06	1.86E-06	1.86E-06	1.86E-06	2.24E-06
W Cl-36	1.69E-04	2.46E-06	1.86E-06	3.12E-05	1.86E-06	1.86E-06	1.86E-06	1.86E-06	1.86E-06	2.19E-05
W Ca-45	3.58E-05	3.26E-07	5.11E-06	9.56E-06	1.66E-07	1.66E-06	1.08E-05	1.62E-05	1.66E-07	6.62E-06
Y Sc-46	1.71E-04	1.23E-05	1.95E-05	3.90E-05	6.66E-06	1.56E-05	8.18E-06	6.22E-06	7.47E-06	2.96E-05
D Cr-51	1.41E-07	9.10E-08	2.19E-07	1.12E-07	8.18E-08	8.03E-08	9.92E-08	1.01E-07	6.73E-08	1.09E-07
W Cr-51	1.39E-06	8.70E-08	4.18E-07	3.37E-07	4.96E-08	8.18E-08	6.92E-08	5.55E-08	4.07E-08	2.13E-07
Y Cr-51	1.98E-06	9.47E-08	4.37E-07	4.43E-07	4.74E-08	9.51E-08	6.92E-08	5.14E-08	4.00E-08	2.64E-07
D Mn-54	4.18E-06	3.15E-06	3.98E-06	4.10E-06	5.35E-06	1.70E-05	5.96E-06	5.86E-06	2.30E-06	5.69E-06
W Mn-54	2.47E-05	4.20E-06	4.79E-06	3.66E-06	3.40E-06	9.17E-06	4.03E-06	3.44E-06	2.73E-06	7.16E-06
W Fe-55	3.20E-06	1.04E-08	3.64E-07	6.29E-07	1.09E-06	2.07E-06	1.08E-06	7.40E-07	1.07E-06	1.57E-06
Y Fe-55	2.51E-05	1.28E-08	3.91E-07	6.09E-07	5.05E-07	9.58E-07	5.03E-07	3.43E-07	4.95E-07	3.96E-06
W Fe-59	5.15E-05	5.28E-06	1.56E-05	5.51E-06	6.22E-06	1.00E-05	5.72E-06	5.07E-06	4.74E-06	1.34E-05
Y Fe-59	8.29E-05	5.29E-06	1.50E-05	4.96E-06	4.07E-06	7.32E-06	4.18E-06	3.41E-06	3.58E-06	1.56E-05
W Co-57	1.49E-05	7.08E-07	2.45E-06	8.04E-07	6.26E-07	1.17E-06	1.03E-06	7.24E-07	5.26E-07	2.80E-06
Y Co-57	6.17E-05	2.01E-06	2.45E-06	2.25E-06	9.86E-07	2.62E-06	2.20E-06	1.67E-06	1.03E-06	9.60E-06
W Co-58	2.96E-05	3.22E-06	7.38E-06	2.65E-06	2.12E-06	3.99E-06	2.39E-06	1.78E-06	2.04E-06	6.77E-06
Y Co-58	5.92E-05	5.16E-06	7.40E-06	4.17E-06	2.81E-06	6.04E-06	3.44E-06	2.58E-06	3.24E-06	1.15E-05
W Co-60	1.30E-04	1.82E-05	2.78E-05	1.71E-05	1.87E-05	2.90E-05	1.75E-05	1.47E-05	1.44E-05	3.59E-05
Y Co-60	1.30E-03	1.00E-04	2.85E-05	8.20E-05	5.85E-05	1.20E-04	6.45E-05	5.08E-05	6.01E-05	2.41E-04
D Ni-59	1.33E-06	1.27E-06	1.42E-06	1.32E-06	1.28E-06	1.28E-06	1.31E-06	1.30E-06	1.39E-06	1.32E-06
W Ni-59	4.44E-06	3.92E-07	8.29E-07	9.19E-07	3.85E-07	3.85E-07	3.92E-07	3.89E-07	4.22E-07	9.19E-07
D Ni-63	3.23E-06	3.05E-06	3.52E-06	3.10E-06	3.05E-06	3.04E-06	3.04E-06	3.04E-06	3.04E-06	3.10E-06
W Ni-63	1.14E-05	9.51E-07	2.49E-06	2.30E-06	9.18E-07	9.14E-07	9.14E-07	9.14E-07	9.14E-07	2.30E-06
D Zn-65	1.18E-05	1.14E-05	1.39E-05	1.40E-05	1.87E-05	1.86E-05	1.92E-05	1.77E-05	1.25E-05	1.88E-05
W Zn-65	2.53E-05	9.32E-06	1.03E-05	1.05E-05	1.31E-05	1.42E-05	1.36E-05	1.23E-05	9.32E-06	1.56E-05
Y Zn-65	7.65E-05	1.30E-05	8.41E-06	1.24E-05	1.29E-05	1.78E-05	1.39E-05	1.21E-05	1.09E-05	2.27E-05
D Se-75	5.03E-06	5.88E-06	4.66E-06	7.62E-06	1.98E-05	1.59E-05	5.70E-06	4.70E-06	3.15E-06	7.22E-06
W Se-75	2.01E-05	5.96E-06	4.29E-06	9.68E-06	1.67E-05	1.43E-05	5.55E-06	4.55E-06	3.10E-06	8.47E-06
D Rb-86	7.68E-06	7.33E-07	1.26E-06	6.69E-06	1.11E-05	1.11E-05	1.10E-05	1.10E-05	1.10E-05	1.09E-05
D Sr-85	1.72E-06	1.21E-06	2.15E-06	2.01E-06	1.36E-06	1.23E-06	3.40E-06	3.77E-06	1.34E-06	1.92E-06
Y Sr-85	2.65E-05	2.44E-06	3.37E-06	6.38E-06	1.36E-06	2.85E-06	1.72E-06	1.30E-06	1.42E-06	5.03E-06
D Sr-89	6.55E-06	3.95E-07	1.38E-05	3.89E-06	2.18E-06	2.18E-06	1.33E-05	2.74E-05	2.18E-06	5.73E-06
Y Sr-89	3.10E-04	1.22E-06	5.26E-05	4.76E-06	4.35E-08	4.38E-08	2.64E-07	5.44E-07	4.35E-08	4.30E-05
D Sr-90	9.89E-06	1.97E-07	1.41E-05	2.40E-04	1.46E-05	1.46E-05	1.10E-03	2.20E-03	1.46E-05	2.10E-04
Y Sr-90	8.50E-03	2.86E-05	8.90E-04	1.50E-04	3.65E-06	1.90E-05	1.20E-04	2.30E-04	3.65E-06	1.45E-03
W Zr-95	6.85E-05	3.98E-06	1.55E-05	4.74E-06	2.93E-06	4.68E-06	5.46E-06	7.77E-06	2.94E-06	1.34E-05
Y Zr-95	1.30E-04	5.77E-06	1.59E-05	5.55E-06	3.02E-06	6.51E-06	3.88E-06	3.17E-06	3.55E-06	2.12E-05
W Nb-94	1.55E-04	1.31E-05	3.07E-05	3.61E-05	2.56E-05	1.39E-05	2.36E-05	3.37E-05	9.73E-06	3.61E-05
Y Nb-94	2.77E-03	1.18E-04	3.49E-05	4.14E-04	7.10E-05	1.45E-04	8.36E-05	7.29E-05	8.21E-05	4.14E-04
Y Nb-95	3.10E-05	2.39E-06	7.17E-06	1.94E-06	1.30E-06	2.53E-06	1.61E-06	1.19E-06	1.35E-06	6.06E-06
D Mo-99	4.04E-06	4.50E-07	5.01E-07	7.88E-07	8.40E-06	1.41E-05	7.15E-07	1.15E-06	3.69E-07	2.30E-06
Y Mo-99	1.89E-05	8.83E-07	2.05E-05	4.85E-07	4.26E-07	7.07E-07	1.79E-07	1.28E-07	1.78E-07	4.39E-06
D Tc-99	9.63E-07	4.90E-07	5.09E-07	1.69E-07	3.48E-07	4.77E-07	2.44E-07	3.11E-07	1.07E-05	7.08E-07
W Tc-99	5.22E-05	5.70E-07	1.66E-06	8.87E-07	3.07E-07	4.21E-07	2.15E-07	2.75E-07	9.46E-06	7.25E-06
D Tc-99m	8.54E-08	3.09E-08	1.67E-08	9.81E-09	1.25E-08	1.83E-08	1.45E-08	1.08E-08	1.33E-07	2.85E-08
W Tc-99m	1.82E-07	2.72E-08	1.35E-08	1.05E-08	8.36E-09	1.55E-08	1.25E-08	9.21E-09	5.72E-08	3.58E-08
Y Ru-103	5.84E-05	1.85E-06	1.18E-05	1.98E-06	1.02E-06	1.92E-06	1.23E-06	9.25E-07	9.89E-07	9.40E-06
Y Ru-106	3.80E-03	6.96E-06	1.40E-04	6.18E-05	8.95E-06	1.15E-05	9.37E-06	1.00E-05	9.19E-06	5.22E-04
D Ag-108	2.22E-05	1.77E-05	1.05E-05	3.01E-05	3.04E-05	2.41E-04	1.14E-05	8.62E-06	4.59E-06	3.01E-05
W Ag-108	1.01E-04	1.25E-05	1.63E-05	2.53E-05	1.29E-05	8.07E-05	8.33E-06	6.18E-06	5.51E-06	2.53E-05
Y Ag-108	1.69E-03	1.15E-04	2.20E-05	2.83E-04	6.62E-05	1.82E-04	7.92E-05	6.22E-05	7.44E-05	2.83E-04
D Ag-110	3.00E-05	2.41E-05	1.45E-05	3.96E-05	4.11E-05	3.00E-04	1.49E-05	1.13E-05	6.29E-06	3.96E-05
W Ag-110	1.17E-04	1.68E-05	2.19E-05	3.09E-05	1.67E-05	9.47E-05	1.07E-05	7.88E-06	7.44E-06	3.09E-05
Y Ag-110	4.44E-04	3.89E-05	2.20E-05	8.03E-05	2.29E-05	6.62E-05	2.49E-05	1.92E-05	2.36E-05	8.03E-05
D Cd-109	1.24E-05	1.07E-05	1.24E-05	1.61E-04	1.46E-03	2.64E-04	1.28E-05	1.16E-05	9.84E-06	1.14E-04
W Cd-109	5.40E-05	3.34E-06	1.09E-05	5.20E-05	4.22E-04	7.59E-06	3.77E-06	3.43E-06	2.83E-06	3.96E-05
Y Cd-109	2.89E-04	1.54E-06	9.25E-06	6.39E-05	1.24E-04	2.32E-06	1.65E-06	1.46E-06	8.88E-07	4.51E-05
D Sn-113	3.52E-06	1.82E-06	6.51E-06	4.00E-06	1.93E-06	1.79E-06	9.21E-06	1.87E-05	1.88E-06	4.00E-06
W Sn-113	6.81E-05	1.57E-06	1.45E-05	1.07E-05	8.84E-07	1.46E-06	2.85E-06	4.88E-06	8.40E-07	1.07E-05
D Sn-126	5.96E-05	4.51E-05	7.92E-05	8.66E-05	5.33E-05	4.74E-05	2.08E-04	4.37E-04	4.85E-05	8.66E-05
W Sn-126	5.59E-04	2.22E-05	9.66E-05	9.95E-05	1.89E-05	2.27E-05	6.25E-05	1.23E-04	1.81E-05	9.95E-05
D Sb-124	7.51E-06	2.95E-06	1.46E-05	5.55E-06	2.84E-06	9.32E-06	5.66E-06	1.26E-05	2.10E-06	5.55E-06
W Sb-124	1.53E-04	5.77E-06	4.03E-05	2.52E-05	2.87E-06	6.51E-06	4.03E-06	4.59E-06	2.49E-06	2.52E-05
D Sb-125	2.36E-06	1.14E-06	4.26E-06	2.13E-06	1.12E-06	3.92E-06	2.40E-06	1.01E-05	8.44E-07	2.13E-06
W Sb-125	8.03E-05	2.33E-06	1.24E-05	1.22E-05	1.24E-06	3.17E-06	1.98E-06	3.62E-06	1.20E-06	1.22E-05
D I-125	4.40E-07	9.18E-08	6.88E-08	3.52E-05	6.33E-08	7.40E-08	1.63E-07	1.58E-07	7.99E-04	2.42E-05
D I-129	7.88E-07	4.61E-08	4.28E-08	2.05E-06	4.49E-07	4.66E-07	6.05E-07	5.64E-07	5.00E-03	1.50E-04
D I-131	2.40E-06	7.47E-08	3.41E-08	6.13E-07	1.47E-07	1.86E-07	2.02E-07	2.21E-07	1.10E-03	3.43E-05
D Cs-134	3.38E-05	3.26E-05	3.71E-05	4.55E-05	6.77E-05	6.99E-05	6.16E-05	5.89E-05	5.19E-05	6.55E-05
D Cs-135	6.40E-07	3.82E-08	8.51E-08	4.40E-06	7.47E-06	7.47E-06	7.47E-06	8.62E-06	7.48E-06	6.69E-06
D Cs-136	6.98E-06	4.97E-06	5.55E-06	6.00E-06	8.68E-06	9.03E-06	7.91E-06	7.15E-06	6.35E-06	8.39E-06

000415

TABLE D-7 . DCF2 (Continued)

Nuclide and Solubility	Lung	Stomach Wall	LLI Wall	Total Body	Kidneys	Liver	Red Marrow	Bone	Thyroid	ICRP
D Cs-137	1.62E-05	1.39E-05	1.60E-05	3.26E-06	5.13E-05	5.23E-05	4.91E-05	5.31E-05	4.47E-05	4.83E-05
D Ba-140	9.74E-06	1.15E-06	1.78E-05	2.08E-06	1.46E-06	1.42E-06	3.61E-06	5.23E-06	1.97E-06	4.91E-06
W La-140	2.01E-05	1.81E-06	2.11E-05	1.05E-06	1.63E-06	2.44E-06	8.52E-07	7.27E-07	2.87E-07	5.54E-06
Y Ce-141	6.31E-05	5.96E-07	1.54E-05	1.15E-06	2.76E-07	8.59E-07	3.03E-07	2.99E-07	9.40E-08	9.26E-06
W Ce-141	4.25E-05	5.78E-07	1.44E-05	1.36E-06	3.20E-06	1.09E-05	9.36E-07	2.32E-06	1.40E-07	7.64E-06
D Ce-141	2.53E-06	5.56E-07	5.26E-06	3.27E-06	1.70E-05	5.81E-05	4.07E-06	1.19E-05	4.36E-07	6.54E-06
Y Ce-144	2.90E-03	4.65E-06	1.30E-04	4.68E-05	2.37E-05	8.13E-05	8.95E-06	1.47E-05	8.22E-07	3.96E-04
W Ce-144	6.80E-04	3.65E-06	1.20E-04	5.11E-05	2.30E-04	8.10E-04	8.29E-05	1.40E-04	4.46E-06	1.75E-04
D Ce-144	1.73E-05	3.00E-06	4.01E-05	1.70E-04	1.00E-03	3.40E-03	1.50E-04	6.10E-04	1.88E-05	3.45E-04
W Eu-152	2.13E-04	7.36E-05	5.55E-05	2.21E-04	1.37E-04	1.28E-03	2.93E-04	8.88E-04	3.05E-05	2.21E-04
W Eu-154	2.93E-04	6.66E-05	6.62E-11	2.86E-04	1.25E-04	1.58E-03	3.92E-04	1.94E-03	2.64E-05	2.86E-04
W Yb-169	3.45E-05	1.07E-06	1.18E-05	9.55E-06	9.32E-07	1.52E-06	3.74E-06	2.72E-05	3.05E-07	6.99E-06
Y Yb-169	5.14E-05	1.29E-06	1.25E-05	1.11E-05	4.51E-07	1.21E-06	1.41E-06	2.33E-06	3.17E-07	8.07E-06
W Pb-210	6.20E-03	1.20E-06	4.70E-05	3.50E-03	3.30E-03	3.10E-03	2.20E-03	2.00E-02	6.70E-04	2.60E-03
W Po-210	4.60E-02	2.22E-06	8.79E-05	1.30E-03	1.40E-02	2.50E-03	8.30E-04	3.70E-04	8.00E-04	8.76E-03
D Po-210	1.00E-03	7.22E-07	2.85E-05	2.10E-03	4.60E-02	8.00E-03	2.70E-03	1.20E-03	2.60E-03	9.95E-03
* Rn-222	2.34E-06	1.55E-10	6.86E-12	3.39E-08	1.37E-08	1.35E-09	1.68E-09	1.03E-08	3.02E-10	2.83E-07
W Ra-226	5.60E-02	3.81E-06	1.80E-04	4.70E-03	6.60E-04	6.60E-04	2.50E-03	2.30E-02	6.60E-04	8.51E-03
W Ra-228	4.80E-03	9.58E-06	6.99E-05	2.50E-03	5.40E-04	7.50E-04	1.70E-03	1.40E-02	5.40E-04	1.80E-03
Y Ac-227	1.03E+00	7.31E-05	1.80E-03	1.01E-01	9.10E-02	6.94E-01	4.50E-01	4.47E+00	6.50E-03	5.20E-01
W Ac-227	8.40E-02	3.55E-05	2.20E-04	1.62E-01	2.46E-01	1.91E+00	1.22E+00	1.22E+01	1.40E-02	6.81E-01
Y Th-228	7.16E-01	9.23E-05	2.90E-03	1.90E-02	1.30E-03	2.50E-03	3.70E-02	4.01E-01	8.60E-04	1.34E-01
W Th-228	1.17E-01	2.20E-05	7.10E-04	2.20E-02	2.40E-03	1.20E-02	2.12E-01	2.31E+00	2.50E-03	1.13E-01
Y Th-229	1.23E+00	1.50E-04	1.40E-03	1.07E-01	4.70E-03	1.50E-02	6.59E-01	7.82E+00	4.20E-03	6.35E-01
W Th-229	1.16E-01	8.34E-05	3.90E-04	1.42E-01	4.40E-03	2.20E-02	1.59E+00	1.90E+01	4.30E-03	7.81E-01
Y Th-230	5.26E-01	2.67E-06	1.00E-04	3.80E-02	1.10E-03	5.50E-03	2.54E-01	3.98E+00	1.10E-03	2.59E-01
W Th-230	5.40E-02	2.74E-06	9.35E-05	5.60E-02	2.60E-03	1.30E-02	6.23E-01	9.78E+00	2.80E-03	3.78E-01
Y Th-232	4.54E-01	7.64E-06	1.10E-04	3.80E-02	1.10E-03	4.90E-03	2.71E-01	4.53E+00	1.10E-03	2.66E-01
W Th-232	4.70E-02	8.75E-06	9.23E-05	5.90E-02	2.30E-03	1.10E-02	6.53E-01	1.10E+01	2.40E-03	4.16E-01
Y Pa-231	5.94E-01	2.50E-05	1.70E-04	1.38E-01	1.92E-01	1.49E+00	8.08E-01	9.36E+00	1.20E-02	6.59E-01
W Pa-231	5.80E-02	3.91E-05	1.30E-04	2.61E-01	4.41E-01	3.43E+00	1.84E+00	2.16E+01	2.60E-02	1.16E+00
Y U-232	8.87E-01	5.58E-05	1.10E-03	5.30E-02	5.80E-03	4.50E-03	8.80E-02	9.54E-01	1.80E-03	3.24E-01
W U-232	6.70E-02	8.54E-06	1.30E-04	7.60E-03	9.70E-03	3.70E-04	5.70E-02	6.29E-01	1.90E-04	3.50E-02
D U-232	1.10E-03	1.86E-05	5.12E-05	2.00E-02	3.20E-02	2.90E-04	1.72E-01	1.91E+00	3.00E-04	8.02E-02
Y U-233	5.42E-01	3.86E-06	1.10E-04	1.70E-02	1.70E-03	1.55E-05	2.40E-04	3.60E-03	1.64E-05	1.12E-01
W U-233	5.60E-02	6.20E-06	9.42E-05	2.60E-03	5.00E-03	4.44E-05	7.00E-04	1.00E-02	4.69E-05	7.80E-03
D U-233	9.50E-04	1.42E-05	4.12E-05	5.70E-03	1.70E-02	1.50E-04	2.30E-03	3.50E-02	1.60E-04	2.54E-03
Y U-234	5.36E-01	3.83E-06	1.10E-04	1.60E-02	1.70E-03	1.62E-05	2.40E-04	3.50E-03	1.61E-05	1.11E-01
W U-234	5.50E-02	6.15E-06	9.41E-05	2.50E-03	4.90E-03	4.64E-05	6.80E-04	1.00E-02	4.63E-05	7.71E-03
D U-234	9.40E-04	1.40E-05	4.10E-05	5.60E-03	1.60E-02	1.50E-04	2.30E-03	3.40E-02	1.50E-04	2.50E-03
Y U-235	4.84E-01	2.48E-05	2.50E-04	1.50E-02	1.50E-03	3.16E-05	1.90E-04	2.90E-03	2.07E-05	9.97E-02
W U-235	5.00E-02	7.84E-06	1.10E-04	2.30E-03	4.40E-03	4.12E-05	5.30E-04	8.50E-03	4.28E-05	6.93E-03
D U-235	8.50E-04	1.42E-05	4.36E-05	5.10E-03	1.50E-02	1.30E-04	1.80E-03	2.80E-02	1.40E-04	2.15E-03
Y U-236	5.06E-01	3.83E-06	1.00E-04	1.60E-02	1.60E-03	1.55E-05	2.00E-04	3.20E-03	1.52E-05	1.04E-01
W U-236	5.20E-02	6.47E-06	8.92E-05	2.40E-03	4.60E-03	4.43E-05	5.90E-04	9.20E-03	4.37E-05	7.26E-03
D U-236	8.90E-04	1.55E-05	4.08E-05	5.30E-03	1.50E-02	1.50E-04	2.00E-03	3.10E-02	1.40E-04	2.30E-03
Y U-238	4.80E-01	8.96E-06	2.80E-04	1.50E-02	1.50E-03	1.76E-05	2.00E-04	2.90E-03	1.59E-05	9.86E-02
W U-238	4.90E-02	6.15E-06	1.10E-04	2.30E-03	4.40E-03	4.02E-05	5.60E-04	8.30E-03	4.16E-05	6.81E-03
D U-238	8.30E-04	1.26E-05	3.81E-05	5.00E-03	1.50E-02	1.30E-04	1.90E-03	2.80E-02	1.40E-04	2.13E-03
Y Np-237	5.69E-01	4.74E-05	1.80E-04	6.60E-02	1.02E-01	7.89E-01	3.00E-01	4.24E+00	5.80E-03	3.46E-01
W Np-237	5.90E-02	7.93E-05	1.60E-04	1.22E-01	2.51E-01	1.94E+00	7.43E-01	1.05E+01	1.40E-02	5.73E-01
Y Pu-236	4.45E-01	3.45E-06	1.30E-04	1.20E-02	6.60E-03	5.00E-02	1.80E-02	2.09E-01	3.40E-04	7.95E-02
W Pu-236	6.40E-02	2.90E-06	1.10E-04	1.50E-02	3.20E-02	2.47E-01	8.10E-02	9.42E-01	1.50E-03	6.59E-02
Y Pu-238	6.08E-01	2.90E-06	1.20E-04	6.00E-02	9.00E-02	7.00E-01	2.61E-01	3.27E+00	5.10E-03	3.07E-01
W Pu-238	6.40E-02	2.77E-06	1.10E-04	1.11E-01	2.30E-01	1.79E+00	6.71E-01	8.40E+00	1.30E-02	4.89E-01
Y Pu-239	5.80E-01	2.72E-06	1.10E-04	6.70E-02	1.03E-01	7.97E-01	3.03E-01	4.16E+00	5.80E-03	3.47E-01
W Pu-239	6.00E-02	2.59E-06	1.00E-04	1.24E-01	2.55E-01	1.98E+00	7.56E-01	1.04E+01	1.50E-02	5.75E-01
Y Pu-240	5.79E-01	2.74E-06	1.10E-04	6.70E-02	1.03E-01	7.95E-01	3.02E-01	4.15E+00	5.80E-03	3.46E-01
W Pu-240	6.00E-02	2.62E-06	1.00E-04	6.70E-02	2.55E-01	1.97E+00	7.55E-01	1.04E+01	1.50E-02	5.74E-01
Y Pu-241	1.10E-03	1.03E-07	6.88E-07	1.20E-03	2.20E-03	1.70E-02	6.80E-03	8.50E-02	1.60E-04	5.38E-03
W Pu-241	1.54E-05	1.81E-07	6.23E-07	2.50E-03	4.90E-03	3.80E-02	1.60E-02	1.94E-01	3.00E-04	1.09E-02
Y Pu-242	5.50E-01	2.75E-06	1.10E-04	6.30E-02	9.80E-02	7.57E-01	2.87E-01	4.19E+00	5.60E-03	3.36E-01
W Pu-242	5.70E-02	2.71E-06	9.74E-05	1.18E-01	2.42E-01	1.88E+00	7.18E-01	1.05E+01	1.40E-02	5.64E-01
Y Pu-244	5.48E-01	1.40E-04	6.50E-04	6.30E-02	9.70E-02	7.49E-01	2.71E-01	4.24E+00	5.50E-03	3.34E-01
W Pu-244	5.60E-02	1.60E-04	3.00E-04	1.17E-01	2.40E-01	1.86E+00	6.76E-01	1.06E+01	1.40E-02	5.61E-01
Y Am-241	6.15E-01	8.79E-06	1.30E-04	6.90E-02	1.06E-01	8.24E-01	3.12E-01	3.90E+00	6.00E-03	3.48E-01
W Am-241	6.40E-02	1.18E-05	1.10E-04	1.28E-01	2.63E-01	2.04E+00	7.77E-01	9.73E+00	1.50E-02	5.63E-01
Y Am-243	5.95E-01	5.96E-05	3.70E-04	6.90E-02	1.07E-01	8.23E-01	3.13E-01	4.17E+00	6.10E-03	3.53E-01
W Am-243	6.10E-02	9.48E-05	1.90E-04	1.28E-01	2.63E-01	2.03E+00	7.77E-01	1.03E+01	1.50E-02	5.79E-01
Y Cm-242	1.72E-01	2.70E-06	1.20E-04	3.00E-03	7.50E-04	5.80E-03	2.00E-03	2.30E-02	4.95E-05	2.32E-02
W Cm-242	5.50E-02	2.87E-06	1.10E-04	3.50E-03	6.20E-03	4.80E-02	1.50E-02	1.68E-01	3.00E-04	1.76E-02
Y Cm-243	6.27E-01	2.18E-05	1.50E-04	4.80E-02	6.80E-02	5.26E-01	1.90E-01	2.15E+00	3.70E-03	2.46E-01
W Cm-243	6.80E-02	3.15E-05	1.40E-04	8.70E-02	1.82E-01	1.41E+00	5.13E-01	5.78E+00	1.00E-02	3.60E-01
Y Cm-244	6.07E-01	3.02E-06	1.30E-04	3.90E-02	5.20E-02	3.98E-01	1.41E-01	1.62E+00	2.70E-03	2.05E-01
W Cm-244	6.70E-02	2.93E-06	1.10E-04	6.80E-02	1.45E-01	1.12E+00	3.99E-01	4.56E+00	7.70E-03	2.85E-01
Y Cm-248	2.22E+00	3.40E-03	1.80E-03	2.60E-01	4.01E-01	3.09E+00	2.97E-01	4.28E+00	2.40E-02	8.78E-01
W Cm-248	2.32E-01	5.00E-03	3.20E-03	4.82E-01	9.86E-01	7.60E+00	7.36E-01	1.06E+01	5.80E-02	1.07E+00
Y Cf-252	8.71E-01	3.20E-04	3.40E-04	2.10E-02	1.20E-02	9.40E-02	1.50E-02	1.63E-01	6.80E-04	1.38E-01
W Cf-252	1.30E-01	2.60E-04	4.00E-04	2.90E-02	6.10E-02	4.73E-01	7.70E-02	8.22E-01	3.00E-03	8.84E-02

Table D-8. DCF3: Fundamental Dose Conversion Factor for External Exposure (Volume Source) (mrem/yr per pCi/m^3)

Nuclide	DCF*	Nuclide	DCF	Nuclide	DCF
H-3	0.00E+00	Tc-99m	5.89E-07	Ac-227	1.78E-06
C-14	0.00E+00	Ru-103	2.77E-06	Th-228	8.62E-06
Na-22	1.34E-05	Ru-106	1.11E-06	Th-229	1.20E-06
P-32	0.00E+00	Ag-108m	8.81E-06	Th-230	1.07E-09
P-33	0.00E+00	Ag-110m	1.66E-05	Th-232	0.00E+00
S-35	0.00E+00	Cd-109	2.27E-07	Pa-231	2.05E-07
Cl-36	0.00E+00	Sn-113	1.48E-06	U-232	8.32E-10
Ca-45	6.42E-15	Sn-126	1.18E-05	U-233	3.16E-10
Sc-46	1.24E-05	Sb-124	1.11E-05	U-234	4.89E-10
Cr-51	1.85E-07	Sb-125	2.49E-06	U-235	7.46E-07
Mn-54	5.10E-06	I-125	3.14E-07	U-236	2.62E-10
Fe-55	0.00E+00	I-129	1.61E-08	U-238	6.55E-08
Fe-59	7.34E-06	I-131	2.16E-06	Np-237	1.10E-06
Co-57	5.61E-07	Cs-134	9.41E-06	Pu-236	1.46E-10
Co-58	5.01E-06	Cs-135	0.00E+00	Pu-238	1.09E-10
Co-60	1.55E-05	Cs-136	1.30E-05	Pu-239	0.00E+00
Ni-59	0.00E+00	Cs-137	3.39E-06	Pu-240	1.32E-10
Ni-63	0.00E+00	Ba-140	1.05E-06	Pu-241	1.37E-12
Zn-65	3.50E-06	La-140	1.39E-05	Pu-242	1.29E-10
Se-75	1.99E-06	Ce-141	3.70E-07	Pu-244	1.62E-06
Rb-86	5.84E-07	Ce-144	2.70E-07	Am-241	7.65E-08
Sr-85	3.10E-06	Eu-152	6.20E-06	Am-243	9.41E-07
Sr-89	5.32E-11	Eu-154	6.91E-06	Cm-242	4.81E-10
Sr-90	1.92E-13	Yb-169	1.41E-06	Cm-243	5.55E-07
Zr-95	9.23E-06	Pb-210	1.03E-08	Cm-244	5.94E-11
Nb-94	9.50E-06	Po-210	1.09E-10	Cm-248	0.00E+00
Nb-95	4.70E-06	Rn-222	9.51E-06	Cf-252	1.36E-08
Mo-99	8.62E-07	Ra-226	3.16E-08		
Tc-99	1.39E-14	Ra-228	4.31E-06		

*DCF: fundamental dose conversion factor

000417

TABLE D-9 . DCF4: Fundamental Dose Conversion Factor for External Exposure (Area Source) (mrem/year per pCi/m^2)

Nuclide	Lung	Stomach Wall	LLI Wall	Total Body	Kidneys	Liver	Red Marrow	Bone	Thyroid	ICRP
H-3	0.00E+00	0.00E+00	0.00E+00	0.00E+00	0.00E+00	0.00E+00	0.00E+00	0.00E+00	0.00E+00	0.00E+00
C-14	0.00E+00	0.00E+00	0.00E+00	0.00E+00	0.00E+00	0.00E+00	0.00E+00	0.00E+00	0.00E+00	0.00E+00
Na-22	1.85E-04	1.70E-04	1.68E-04	1.97E-04	1.82E-04	1.73E-04	1.88E-04	2.06E-04	2.30E-04	1.90E-04
P-32	0.00E+00	0.00E+00	0.00E+00	0.00E+00	0.00E+00	0.00E+00	0.00E+00	0.00E+00	0.00E+00	0.00E+00
P-33	0.00E+00	0.00E+00	0.00E+00	0.00E+00	0.00E+00	0.00E+00	0.00E+00	0.00E+00	0.00E+00	0.00E+00
S-35	0.00E+00	0.00E+00	0.00E+00	0.00E+00	0.00E+00	0.00E+00	0.00E+00	0.00E+00	0.00E+00	0.00E+00
Cl-36	2.65E-13	6.85E-14	1.38E-13	3.36E-12	4.03E-16	3.26E-15	8.70E-14	4.29E-13	1.68E-13	1.62E-12
Ca-45	2.08E-15	7.10E-16	1.14E-15	1.81E-14	2.86E-17	7.88E-17	6.96E-16	3.39E-15	2.02E-15	8.95E-15
Sc-46	1.72E-04	1.59E-04	1.57E-04	1.83E-04	1.70E-04	1.61E-04	1.74E-04	1.86E-04	2.16E-04	1.76E-04
Cr-51	2.90E-06	2.65E-06	2.60E-06	3.11E-06	2.78E-06	2.68E-06	2.99E-06	3.70E-06	3.68E-06	3.11E-06
Mn-54	7.44E-05	6.89E-05	6.74E-05	7.93E-05	7.33E-05	6.96E-05	7.56E-05	8.19E-05	9.37E-05	7.93E-05
Fe-55	1.26E-09	3.25E-10	6.56E-10	1.59E-08	1.91E-12	1.55E-11	4.15E-10	2.04E-09	7.96E-10	1.59E-08
Fe-59	9.74E-05	9.00E-05	8.96E-05	1.04E-04	9.70E-05	9.19E-05	9.85E-05	1.05E-04	1.22E-04	1.04E-04
Co-57	1.15E-05	1.03E-05	9.93E-06	1.27E-05	1.05E-05	1.04E-05	1.00E-05	1.85E-05	1.60E-05	1.27E-05
Co-58	8.70E-05	8.04E-05	7.89E-05	9.26E-05	8.56E-05	8.15E-05	8.85E-05	9.70E-05	1.09E-04	9.26E-05
Co-60	2.02E-04	1.87E-04	1.86E-04	2.14E-04	2.01E-04	1.91E-04	2.04E-04	2.16E-04	2.52E-04	2.14E-04
Ni-59	2.37E-09	6.11E-10	1.23E-09	3.00E-08	3.59E-12	2.91E-11	7.78E-10	3.85E-09	1.50E-09	3.00E-08
Ni-63	0.00E+00	0.00E+00	0.00E+00	0.00E+00	0.00E+00	0.00E+00	0.00E+00	0.00E+00	0.00E+00	0.00E+00
Zn-65	4.85E-05	4.48E-05	4.44E-05	5.15E-05	4.81E-05	4.56E-05	4.89E-05	5.26E-05	6.11E-05	5.15E-05
Se-75	3.59E-05	3.26E-05	3.20E-05	3.89E-05	3.40E-05	3.30E-05	3.55E-05	5.00E-05	4.70E-05	3.74E-05
Rb-86	7.96E-06	7.36E-06	7.29E-06	8.47E-06	7.92E-06	7.51E-06	8.07E-06	8.62E-06	1.00E-05	8.18E-06
Sr-85	4.59E-05	4.22E-05	4.11E-05	4.96E-05	4.48E-05	4.29E-05	4.70E-05	5.37E-05	5.70E-05	4.74E-05
Sr-89	1.20E-08	1.11E-08	1.10E-08	1.28E-08	1.19E-08	1.13E-08	1.22E-08	1.31E-08	1.51E-08	1.28E-08
Sr-90	0.00E+00	0.00E+00	0.00E+00	0.00E+00	0.00E+00	0.00E+00	0.00E+00	0.00E+00	0.00E+00	0.00E+00
Zr-95	7.15E-05	6.61E-05	6.46E-05	7.66E-05	7.01E-05	6.66E-05	7.26E-05	8.09E-05	9.02E-05	7.66E-05
Nb-94	1.40E-04	1.30E-04	1.27E-04	1.50E-04	1.38E-04	1.31E-04	1.43E-04	1.56E-04	1.77E-04	1.50E-04
Nb-95	6.85E-05	6.33E-05	6.22E-05	7.30E-05	6.74E-05	6.41E-05	6.96E-05	7.59E-05	8.63E-05	7.30E-05
Mo-99	1.39E-05	1.29E-05	1.26E-05	1.49E-05	1.36E-05	1.30E-05	1.40E-05	1.62E-05	1.77E-05	1.49E-05
Tc-99	4.93E-11	4.30E-11	4.04E-11	5.52E-11	4.56E-11	4.44E-11	3.62E-11	8.63E-11	7.26E-11	5.52E-11
Tc-99m	1.20E-05	1.07E-05	1.05E-05	1.31E-05	1.10E-05	1.09E-05	1.09E-05	1.87E-05	1.65E-05	1.31E-05
Ru-103	4.37E-05	4.00E-05	3.93E-05	4.68E-05	4.23E-05	4.08E-05	4.45E-05	5.12E-05	5.41E-05	4.68E-05
Ru-106	1.84E-05	1.70E-05	1.66E-05	1.97E-05	1.80E-05	1.72E-05	1.88E-05	2.11E-05	2.30E-05	1.97E-05
Ag-108	1.46E-04	1.35E-04	1.32E-04	1.57E-04	1.43E-04	1.37E-04	1.49E-04	1.68E-04	1.84E-04	1.57E-04
Ag-110	2.40E-04	2.22E-04	2.18E-04	2.55E-04	2.37E-04	2.25E-04	2.43E-04	2.64E-04	3.00E-04	2.55E-04
Cd-109	3.02E-07	1.88E-07	1.83E-07	9.25E-07	4.03E-07	1.36E-07	1.04E-07	5.07E-07	6.11E-07	5.62E-07
Sn-113	2.41E-05	2.20E-05	2.16E-05	2.66E-05	2.36E-05	2.22E-05	2.46E-05	2.98E-05	3.07E-05	2.66E-05
Sn-126	3.93E-04	3.63E-04	3.55E-04	4.20E-04	3.85E-04	3.67E-04	3.99E-04	4.50E-04	4.94E-04	4.20E-04
Sb-124	1.56E-04	1.44E-04	1.43E-04	1.66E-04	1.55E-04	1.47E-04	1.59E-04	1.71E-04	1.93E-04	1.66E-04
Sb-125	3.91E-05	3.58E-05	3.49E-05	4.34E-05	3.90E-05	3.62E-05	3.92E-05	4.68E-05	5.01E-05	4.34E-05
I-125	1.09E-06	7.73E-07	6.77E-07	2.30E-06	1.87E-06	7.92E-07	4.00E-07	1.89E-06	2.26E-06	1.61E-06
I-129	1.07E-06	7.81E-07	6.70E-07	2.03E-06	1.77E-06	8.44E-07	4.04E-07	1.87E-06	2.17E-06	2.03E-06
I-131	3.57E-05	3.26E-05	3.19E-05	3.91E-05	3.50E-05	3.31E-05	3.62E-05	4.46E-05	4.55E-05	3.91E-05
Cs-134	1.39E-04	1.28E-04	1.26E-04	1.48E-04	1.36E-04	1.30E-04	1.41E-04	1.56E-04	1.74E-04	1.48E-04
Cs-135	0.00E+00	0.00E+00	0.00E+00	0.00E+00	0.00E+00	0.00E+00	0.00E+00	0.00E+00	0.00E+00	0.00E+00
Cs-136	1.89E-04	1.74E-04	1.71E-04	2.01E-04	1.86E-04	1.77E-04	1.90E-04	2.12E-04	2.39E-04	2.01E-04
Cs-137	5.37E-05	4.96E-05	4.85E-05	5.74E-05	5.26E-05	5.00E-05	5.44E-05	6.07E-05	6.74E-05	5.74E-05
Ba-140	1.70E-05	1.56E-05	1.52E-05	1.84E-05	1.66E-05	1.58E-05	1.72E-05	2.05E-05	2.15E-05	1.84E-05
La-140	1.89E-04	1.75E-04	1.74E-04	2.01E-04	1.89E-04	1.79E-04	1.92E-04	2.05E-04	2.33E-04	2.01E-04
Ce-141	7.04E-06	6.30E-06	6.11E-06	7.81E-06	6.70E-06	6.37E-06	6.33E-06	1.10E-05	9.81E-06	7.81E-06
Ce-144	4.89E-06	4.37E-06	4.22E-06	5.63E-06	5.18E-06	4.52E-06	4.31E-06	6.58E-06	6.74E-06	5.63E-06
Eu-152	9.74E-05	8.93E-05	8.81E-05	1.04E-04	9.67E-05	9.11E-05	9.70E-05	1.11E-04	1.24E-04	1.04E-04
Eu-154	1.06E-04	9.81E-05	9.67E-05	1.14E-04	1.05E-04	9.96E-05	1.07E-04	1.19E-04	1.34E-04	1.14E-04
Yb-169	2.78E-05	2.42E-05	2.28E-05	3.19E-05	2.73E-05	2.53E-05	2.20E-05	4.48E-05	4.03E-05	2.92E-05
Pb-210	1.44E-07	1.11E-07	9.67E-08	2.56E-07	1.63E-07	1.23E-07	6.44E-08	2.64E-07	2.42E-07	2.56E-07
Po-210	7.59E-10	7.04E-10	6.89E-10	8.11E-10	7.48E-10	7.11E-10	7.70E-10	8.41E-10	9.56E-10	8.11E-10
Rn-222	3.81E-04	3.52E-04	3.48E-04	4.05E-04	3.78E-04	3.59E-04	3.86E-04	4.21E-04	4.71E-04	4.05E-04
Ra-226	3.81E-04	3.52E-04	3.49E-04	4.05E-04	3.78E-04	3.59E-04	3.86E-04	4.22E-04	4.72E-04	4.05E-04
Ra-228	8.00E-05	7.41E-05	7.30E-05	8.56E-05	7.89E-05	7.48E-05	8.07E-05	8.96E-05	1.01E-04	8.56E-05
Ac-227	4.09E-05	3.69E-05	3.59E-05	4.51E-05	3.93E-05	3.76E-05	3.89E-05	5.68E-05	5.43E-05	4.51E-05
Th-228	3.00E-04	2.81E-04	2.78E-04	3.18E-04	3.04E-04	2.85E-04	3.05E-04	3.26E-04	3.61E-04	3.18E-04
Th-229	1.99E-04	1.82E-04	1.80E-04	2.13E-04	1.96E-04	1.86E-04	1.97E-04	2.30E-04	2.49E-04	2.13E-04
Th-230	3.85E-08	3.09E-08	2.97E-08	7.85E-08	3.26E-08	3.12E-08	2.59E-08	6.59E-08	5.48E-08	7.85E-08
Th-232	1.96E-08	1.43E-08	1.41E-08	5.74E-08	1.48E-08	1.39E-08	1.13E-08	3.41E-08	2.74E-08	5.74E-08
Pa-231	2.77E-06	2.49E-06	2.44E-06	3.25E-06	2.66E-06	2.51E-06	2.73E-06	3.74E-06	3.62E-06	3.25E-06
U-232	2.86E-08	2.04E-08	2.08E-08	9.07E-08	1.97E-08	1.87E-08	1.73E-08	4.81E-08	3.89E-08	9.07E-08
U-233	2.27E-08	1.87E-08	1.86E-08	4.41E-08	1.83E-08	1.81E-08	1.77E-08	3.74E-08	3.11E-08	4.41E-08
U-234	1.74E-08	1.11E-08	1.19E-08	7.07E-08	1.00E-08	9.33E-09	9.15E-09	2.95E-08	2.31E-08	7.07E-08
U-235	1.50E-05	1.35E-05	1.32E-05	1.70E-05	1.41E-05	1.37E-05	1.41E-05	2.26E-05	2.04E-05	1.70E-05
U-236	1.40E-08	8.41E-09	9.19E-09	6.41E-08	6.85E-09	6.67E-09	6.52E-09	2.41E-08	1.81E-08	6.41E-08
U-238	1.73E-04	1.60E-04	1.57E-04	1.85E-04	1.70E-04	1.62E-04	1.73E-04	1.98E-04	2.19E-04	1.85E-04
Np-237	2.18E-05	1.96E-05	1.91E-05	2.43E-05	2.07E-05	1.99E-05	2.09E-05	3.04E-05	2.88E-05	2.43E-05
Pu-236	1.59E-08	8.15E-09	9.70E-09	8.85E-08	4.96E-09	4.85E-09	6.33E-09	2.69E-08	2.01E-08	8.85E-08
Pu-238	1.23E-08	5.67E-09	7.22E-09	7.67E-08	2.67E-09	2.64E-09	4.52E-09	2.05E-08	1.51E-08	7.67E-08
Pu-239	8.96E-09	6.04E-09	6.56E-09	3.38E-08	4.85E-09	4.85E-09	5.59E-09	1.47E-08	1.17E-08	3.38E-08
Pu-240	1.20E-08	5.63E-09	7.07E-09	7.33E-08	2.87E-09	2.77E-09	4.44E-09	2.01E-08	1.49E-08	7.33E-08
Pu-241	0.00E+00	0.00E+00	0.00E+00	0.00E+00	0.00E+00	0.00E+00	0.00E+00	0.00E+00	0.00E+00	0.00E+00
Pu-242	1.01E-08	4.81E-09	6.00E-09	6.07E-08	2.50E-09	2.44E-09	3.78E-09	1.69E-08	1.26E-08	6.07E-08
Pu-244	2.91E-05	2.68E-05	2.63E-05	3.16E-05	2.85E-05	2.72E-05	2.96E-05	3.32E-05	3.64E-05	3.16E-05
Am-241	2.01E-06	1.64E-06	1.46E-06	2.66E-06	1.98E-06	1.78E-06	1.08E-06	3.70E-06	3.18E-06	2.66E-06
Am-243	2.03E-05	1.79E-05	1.72E-05	2.30E-05	1.90E-05	1.84E-05	1.72E-05	3.20E-05	2.84E-05	2.30E-05
Cm-242	1.44E-08	6.70E-09	8.48E-09	8.52E-08	2.78E-09	2.82E-09	5.26E-09	2.39E-08	1.86E-08	8.52E-08
Cm-243	1.17E-05	1.05E-05	1.02E-05	1.31E-05	1.09E-05	1.06E-05	1.09E-05	1.74E-05	1.58E-05	1.31E-05
Cm-244	1.24E-08	5.63E-09	7.26E-09	7.56E-08	2.07E-09	2.12E-09	4.44E-09	2.06E-08	1.59E-08	7.56E-08
Cm-248	9.04E-09	4.19E-09	5.30E-09	5.37E-08	1.76E-09	1.75E-09	3.27E-09	1.50E-08	1.17E-08	5.37E-08
Cf-252	1.09E-08	5.41E-09	6.56E-09	5.89E-08	2.46E-09	2.42E-09	4.11E-09	1.81E-08	1.50E-08	5.89E-08

TABLE D-10 . DCF5: Fundamental Dose Conversion Factor for External Exposure (Air Immersion) (mrem/year per pCi/m^3)

Nuclide	Lung	Stomach Wall	LLI Wall	Total Body	Kidneys	Liver	Red Marrow	Bone	Thyroid	ICRP
H-3	0.00E+00	0.00E+00	0.00E+00	0.00E+00	0.00E+00	0.00E+00	0.00E+00	0.00E+00	0.00E+00	0.00E+00
C-14	0.00E+00	0.00E+00	0.00E+00	0.00E+00	0.00E+00	0.00E+00	0.00E+00	0.00E+00	0.00E+00	0.00E+00
Na-22	9.84E-03	9.10E-03	8.99E-03	1.05E-02	9.73E-03	9.25E-03	9.99E-03	1.10E-02	1.23E-02	1.01E-02
P-32	0.00E+00	0.00E+00	0.00E+00	0.00E+00	0.00E+00	0.00E+00	0.00E+00	0.00E+00	0.00E+00	0.00E+00
P-33	0.00E+00	0.00E+00	0.00E+00	0.00E+00	0.00E+00	0.00E+00	0.00E+00	0.00E+00	0.00E+00	0.00E+00
S-35	0.00E+00	0.00E+00	0.00E+00	0.00E+00	0.00E+00	0.00E+00	0.00E+00	0.00E+00	0.00E+00	0.00E+00
Cl-36	2.41E-12	6.22E-13	1.25E-12	3.05E-11	3.66E-15	2.96E-14	7.92E-13	3.92E-12	1.52E-12	1.47E-11
Ca-45	7.92E-15	2.71E-15	4.37E-15	6.88E-14	1.09E-16	3.00E-16	2.65E-15	1.29E-14	7.70E-15	3.40E-14
Sc-46	9.29E-03	8.62E-03	8.51E-03	9.88E-03	9.21E-03	8.73E-03	9.40E-03	1.01E-02	1.17E-02	9.55E-03
Cr-51	1.35E-04	1.23E-04	1.21E-04	1.45E-04	1.29E-04	1.25E-04	1.39E-04	1.72E-04	1.71E-04	1.45E-04
Mn-54	3.85E-03	3.57E-03	3.51E-03	4.11E-03	3.81E-03	3.61E-03	3.93E-03	4.26E-03	4.85E-03	4.11E-03
Fe-55	6.52E-09	1.69E-09	3.39E-09	8.26E-08	9.89E-12	8.04E-11	2.14E-09	1.06E-08	4.15E-09	8.26E-08
Fe-59	5.48E-03	5.07E-03	5.04E-03	5.81E-03	5.44E-03	5.19E-03	5.52E-03	5.89E-03	6.85E-03	5.81E-03
Co-57	5.11E-04	4.59E-04	4.44E-04	5.63E-04	4.70E-04	4.63E-04	4.48E-04	8.30E-04	7.19E-04	5.63E-04
Co-58	4.44E-03	4.11E-03	4.04E-03	4.74E-03	4.37E-03	4.19E-03	4.52E-03	4.96E-03	5.59E-03	4.74E-03
Co-60	1.15E-02	1.07E-02	1.06E-02	1.23E-02	1.15E-02	1.09E-02	1.16E-02	1.23E-02	1.44E-02	1.23E-02
Ni-59	1.10E-08	2.83E-09	5.70E-09	1.39E-07	1.66E-11	1.35E-10	3.60E-09	1.78E-08	6.93E-09	1.39E-07
Ni-63	0.00E+00	0.00E+00	0.00E+00	0.00E+00	0.00E+00	0.00E+00	0.00E+00	0.00E+00	0.00E+00	0.00E+00
Zn-65	2.68E-03	2.48E-03	2.46E-03	2.85E-03	2.66E-03	2.53E-03	2.71E-03	2.90E-03	3.37E-03	2.85E-03
Se-75	1.65E-03	1.50E-03	1.47E-03	1.78E-03	1.57E-03	1.52E-03	1.63E-03	2.29E-03	2.16E-03	1.71E-03
Rb-86	4.37E-04	4.07E-04	4.00E-04	4.66E-04	4.37E-04	4.11E-04	4.44E-04	4.74E-04	5.51E-04	4.51E-04
Sr-85	2.23E-03	2.05E-03	2.00E-03	2.39E-03	2.17E-03	2.08E-03	2.28E-03	2.60E-03	2.77E-03	2.30E-03
Sr-89	6.33E-07	5.89E-07	5.78E-07	6.74E-07	6.26E-07	5.96E-07	6.44E-07	6.96E-07	8.00E-07	6.74E-07
Sr-90	0.00E+00	0.00E+00	0.00E+00	0.00E+00	0.00E+00	0.00E+00	0.00E+00	0.00E+00	0.00E+00	0.00E+00
Zr-95	3.61E-03	3.34E-03	3.27E-03	3.86E-03	3.54E-03	3.37E-03	3.67E-03	4.09E-03	4.55E-03	3.86E-03
Nb-94	7.22E-03	6.70E-03	6.56E-03	7.70E-03	7.11E-03	6.78E-03	7.33E-03	8.04E-03	9.11E-03	7.70E-03
Nb-95	3.50E-03	3.24E-03	3.18E-03	3.74E-03	3.45E-03	3.28E-03	3.56E-03	3.89E-03	4.41E-03	3.74E-03
Mo-99	7.00E-04	6.44E-04	6.33E-04	7.48E-04	6.85E-04	6.52E-04	7.07E-04	8.07E-04	8.85E-04	7.48E-04
Tc-99	2.09E-09	1.82E-09	1.71E-09	2.34E-09	1.93E-09	1.89E-09	1.53E-09	3.65E-09	3.07E-09	2.34E-09
Tc-99m	5.37E-04	4.85E-04	4.70E-04	5.85E-04	4.96E-04	4.89E-04	4.93E-04	8.44E-04	7.41E-04	5.85E-04
Ru-103	2.11E-03	1.94E-03	1.90E-03	2.26E-03	2.05E-03	1.97E-03	2.16E-03	2.47E-03	2.62E-03	2.26E-03
Ru-106	9.22E-04	8.52E-04	8.33E-04	9.85E-04	9.04E-04	8.63E-04	9.41E-04	1.06E-03	1.15E-03	9.85E-04
Ag-108	7.26E-03	6.70E-03	6.55E-03	7.75E-03	7.08E-03	6.78E-03	7.41E-03	8.24E-03	9.10E-03	7.75E-03
Ag-110	1.27E-02	1.18E-02	1.16E-02	1.35E-02	1.25E-02	1.19E-02	1.29E-02	1.40E-02	1.59E-02	1.35E-02
Cd-109	3.57E-06	2.24E-06	2.16E-06	1.07E-05	4.88E-06	1.65E-06	1.23E-06	5.99E-06	7.25E-06	6.55E-06
Sn-113	1.12E-03	1.03E-03	1.01E-03	1.22E-03	1.09E-03	1.04E-03	1.15E-03	1.38E-03	1.42E-03	1.22E-03
Sn-126	1.96E-02	1.82E-02	1.77E-02	2.10E-02	1.93E-02	1.84E-02	2.00E-02	2.25E-02	2.47E-02	2.10E-02
Sb-124	8.81E-03	8.15E-03	8.07E-03	9.37E-03	8.78E-03	8.33E-03	8.96E-03	9.59E-03	1.09E-02	9.37E-03
Sb-125	1.87E-03	1.72E-03	1.68E-03	2.03E-03	1.84E-03	1.74E-03	1.89E-03	2.22E-03	2.37E-03	2.03E-03
I-125	2.45E-05	1.73E-05	1.51E-05	5.18E-05	4.18E-05	1.76E-05	8.92E-06	4.26E-05	5.07E-05	3.61E-05
I-129	2.06E-05	1.51E-05	1.30E-05	3.81E-05	3.39E-05	1.65E-05	7.81E-06	3.63E-05	4.15E-05	3.81E-05
I-131	1.67E-03	1.53E-03	1.50E-03	1.80E-03	1.62E-03	1.55E-03	1.71E-03	2.06E-03	2.12E-03	1.80E-03
Cs-134	7.04E-03	6.52E-03	6.37E-03	7.52E-03	6.93E-03	6.59E-03	7.19E-03	7.93E-03	8.85E-03	7.52E-03
Cs-135	0.00E+00	0.00E+00	0.00E+00	0.00E+00	0.00E+00	0.00E+00	0.00E+00	0.00E+00	0.00E+00	0.00E+00
Cs-136	9.93E-03	9.19E-03	9.04E-03	1.06E-02	9.78E-03	9.30E-03	1.00E-02	1.11E-02	1.25E-02	1.06E-02
Cs-137	2.69E-03	2.48E-03	2.43E-03	2.87E-03	2.63E-03	2.51E-03	2.74E-03	3.04E-03	3.37E-03	2.87E-03
Ba-140	8.15E-04	7.48E-04	7.30E-04	8.74E-04	7.93E-04	7.56E-04	8.26E-04	9.74E-04	1.02E-03	8.74E-04
La-140	1.09E-02	1.01E-02	1.00E-02	1.16E-02	1.09E-02	1.03E-02	1.11E-02	1.18E-02	1.34E-02	1.16E-02
Ce-141	3.11E-04	2.79E-04	2.72E-04	3.43E-04	2.93E-04	2.83E-04	2.83E-04	4.85E-04	4.30E-04	3.43E-04
Ce-144	2.46E-04	2.23E-04	2.18E-04	2.73E-04	2.52E-04	2.29E-04	2.29E-04	3.13E-04	3.24E-04	2.73E-04
Eu-152	5.19E-03	4.78E-03	4.70E-03	5.52E-03	5.15E-03	4.85E-03	5.19E-03	5.81E-03	6.56E-03	5.52E-03
Eu-154	5.74E-03	5.30E-03	5.22E-03	6.11E-03	5.67E-03	5.37E-03	5.74E-03	6.37E-03	7.22E-03	6.11E-03
Yb-169	1.13E-03	9.92E-04	9.44E-04	1.28E-03	1.10E-03	1.03E-03	9.36E-04	1.78E-03	1.61E-03	1.18E-03
Pb-210	4.22E-06	3.35E-06	2.87E-06	5.93E-06	5.04E-06	3.78E-06	1.93E-06	7.81E-06	7.30E-06	5.93E-06
Po-210	3.93E-08	3.63E-08	3.56E-08	4.19E-08	3.85E-08	3.67E-08	3.96E-08	4.33E-08	4.93E-08	4.19E-08
Rn-222	2.15E-02	1.99E-02	1.97E-02	2.28E-02	2.14E-02	2.02E-02	2.17E-02	2.36E-02	2.65E-02	2.28E-02
Ra-226	2.15E-02	1.99E-02	1.97E-02	2.28E-02	2.14E-02	2.03E-02	2.18E-02	2.36E-02	2.65E-02	2.28E-02
Ra-228	4.26E-03	3.93E-03	3.89E-03	4.52E-03	4.19E-03	4.00E-03	4.30E-03	4.74E-03	5.37E-03	4.52E-03
Ac-227	1.86E-03	1.68E-03	1.64E-03	2.02E-03	1.78E-03	1.71E-03	1.79E-03	2.54E-03	2.45E-03	2.02E-03
Th-228	1.91E-02	1.79E-02	1.78E-02	2.02E-02	1.94E-02	1.82E-02	1.95E-02	2.05E-02	2.29E-02	2.02E-02
Th-229	1.09E-02	1.00E-02	9.97E-03	1.17E-02	1.08E-02	1.03E-02	1.09E-02	1.25E-02	1.36E-02	1.17E-02
Th-230	1.41E-06	1.21E-06	1.13E-06	1.73E-06	1.33E-06	1.27E-06	1.02E-06	2.41E-06	2.07E-06	1.73E-06
Th-232	5.96E-07	5.00E-07	4.63E-07	8.22E-07	5.63E-07	5.26E-07	3.93E-07	1.04E-06	8.93E-07	8.22E-07
Pa-231	1.25E-04	1.13E-04	1.11E-04	1.37E-04	1.20E-04	1.15E-04	1.25E-04	1.68E-04	1.63E-04	1.37E-04
U-232	8.37E-07	7.07E-07	6.70E-07	1.19E-06	7.74E-07	7.30E-07	6.07E-07	1.41E-06	1.22E-06	1.19E-06
U-233	8.89E-07	7.85E-07	7.59E-07	1.06E-06	8.07E-07	7.93E-07	7.44E-07	1.47E-06	1.26E-06	1.06E-06
U-234	4.11E-07	3.37E-07	3.19E-07	6.78E-07	3.74E-07	3.46E-07	2.76E-07	7.11E-07	6.07E-07	6.78E-07
U-235	6.76E-04	6.07E-04	5.94E-04	7.37E-04	6.33E-04	6.16E-04	6.38E-04	1.01E-03	9.16E-04	7.37E-04
U-236	2.99E-07	2.39E-07	2.21E-07	5.33E-07	2.61E-07	2.48E-07	1.72E-07	5.41E-07	4.48E-07	5.33E-07
U-238	9.05E-03	8.33E-03	8.18E-03	9.65E-03	8.90E-03	8.45E-03	9.07E-03	1.03E-02	1.14E-02	9.65E-03
Np-237	9.84E-04	8.91E-04	8.69E-04	1.07E-03	9.39E-04	9.05E-04	9.52E-04	1.36E-03	1.30E-03	1.07E-03
Pu-236	2.10E-07	1.53E-07	1.46E-07	5.33E-07	1.64E-07	1.51E-07	1.06E-07	3.78E-07	3.10E-07	5.33E-07
Pu-238	1.18E-07	7.85E-08	7.78E-08	3.96E-07	8.04E-08	7.15E-08	5.30E-08	2.09E-07	1.71E-07	3.96E-07
Pu-239	2.42E-07	2.07E-07	2.03E-07	3.65E-07	2.09E-07	2.05E-07	1.95E-07	4.00E-07	3.39E-07	3.65E-07
Pu-240	1.21E-07	8.15E-08	8.00E-08	3.89E-07	8.63E-08	7.59E-08	5.44E-08	2.15E-07	1.78E-07	3.89E-07
Pu-241	0.00E+00	0.00E+00	0.00E+00	0.00E+00	0.00E+00	0.00E+00	0.00E+00	0.00E+00	0.00E+00	0.00E+00
Pu-242	1.07E-07	7.41E-08	7.22E-08	3.30E-07	7.78E-08	7.00E-08	5.00E-08	1.92E-07	1.58E-07	3.30E-07
Pu-244	1.48E-03	1.37E-03	1.34E-03	1.58E-03	1.45E-03	1.39E-03	1.51E-03	1.68E-03	1.85E-03	1.58E-03
Am-241	6.93E-05	5.70E-05	5.04E-05	8.41E-05	6.93E-05	6.22E-05	3.74E-05	1.27E-04	1.10E-04	8.41E-05
Am-243	8.86E-04	7.86E-04	7.53E-04	9.77E-04	8.31E-04	8.04E-04	7.63E-04	1.38E-03	1.23E-03	9.77E-04
Cm-242	1.26E-07	8.19E-08	8.33E-08	4.48E-07	7.59E-08	7.00E-08	5.74E-08	2.22E-07	1.82E-07	4.48E-07
Cm-243	5.22E-04	4.70E-04	4.59E-04	5.70E-04	4.93E-04	4.78E-04	4.89E-04	7.74E-04	7.07E-04	5.70E-04
Cm-244	9.70E-08	5.96E-08	6.26E-08	3.81E-07	5.26E-08	4.78E-08	4.19E-08	1.69E-07	1.39E-07	3.81E-07
Cm-248	7.81E-08	5.00E-08	5.07E-08	2.81E-07	4.70E-08	4.26E-08	3.43E-08	1.37E-07	1.13E-07	2.81E-07
Cf-252	1.10E-07	7.41E-08	7.48E-08	3.47E-07	6.70E-08	6.37E-08	5.41E-08	1.91E-07	1.60E-07	3.47E-07

000419

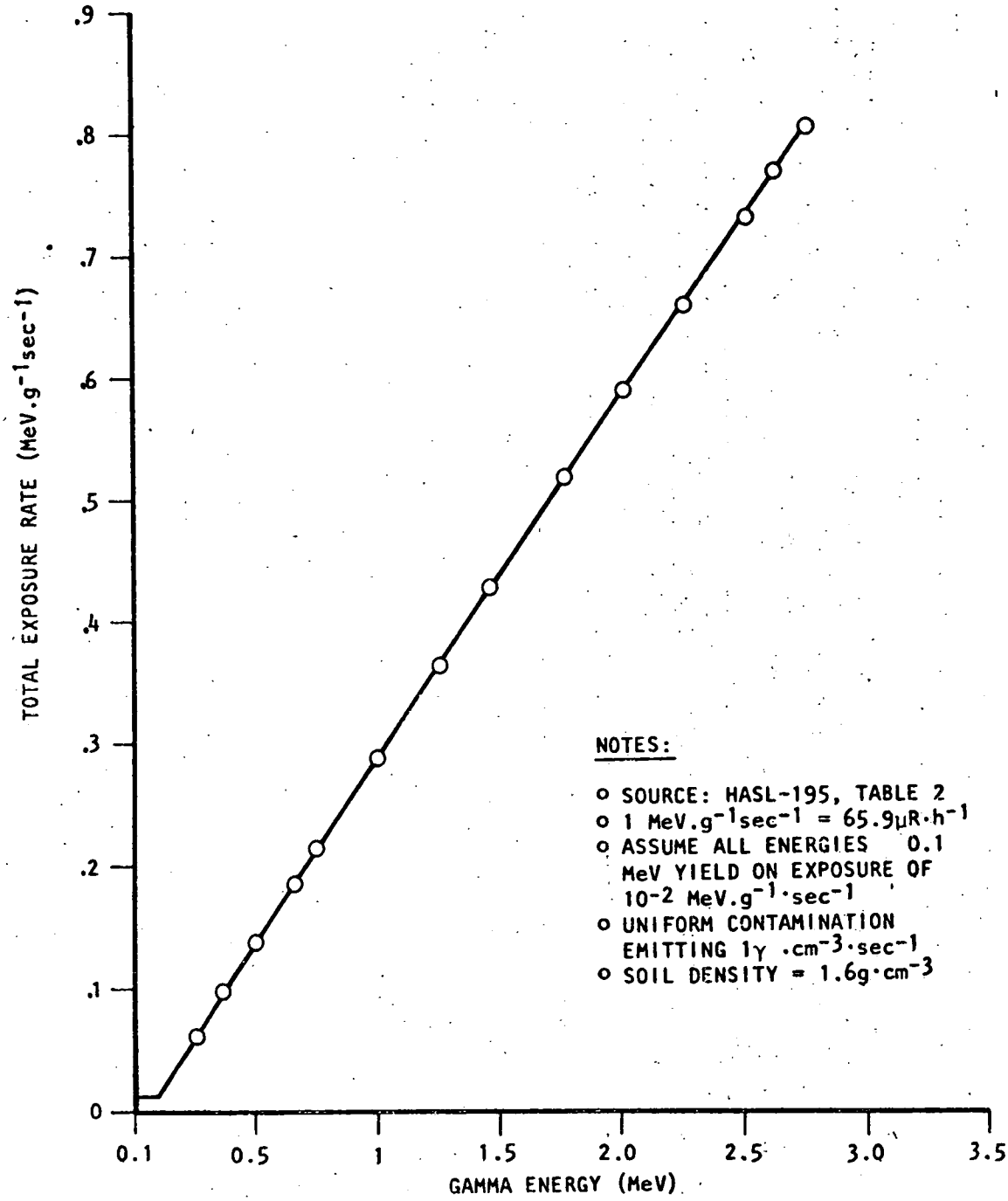

TOTAL EXPOSURE RATE VS. GAMMA ENERGY AT ONE METER ABOVE BULK CONTAMINATED SOIL

DAMES & MOORE

Figure D.1

Exposure rates, E, for the radionuclides of interest in this report were then calculated from the expression:

$$E = K \Sigma f_i E_T \qquad \text{(D-10)}$$

where f_i is the fraction of gamma photons of energy T per disintegration, E_T is the exposure rate factor obtained from Figure D.1 for energy T, and K is a proportionality constant which converts the exposure rate factors in HASL-195 to units of dose equivalent (mrem/year per Ci/m^3). In this case, K = 65.9 μR/hr per MeV/g-sec, and it is assumed that one Roentgen equals one rem. Gamma energies and fractional data for the various radionuclides were obtained from Reference 10.

The resultant annual external gamma dose conversion factors resulting from volume contaminated soil (DCF3) are presented in Table D-8. These DCF's are applied equally to all organs of the body.

Other direct exposure DCF's. The two remaining fundamental DCF's used in this report are the external exposure dose conversion factors resulting from direct photon and electron radiation emanating from surface contaminated material, and from immersion in uniformly contaminated air. These DCF's are denoted by DCF4 and DCF5, respectively.

In the past, the electron component (beta radiation) of the exposure was frequently neglected in comparison to the photon component (gamma radiation) of the exposure due to the comparative penetration capabilities of these radiations. This is the case for DCF3, since a few millimeters of soil is sufficient to stop most of the electron radiation from the radionuclides considered in this work. It is more accurate to include the electron component when the exposure is due to a surface contamination or to immersion in contaminated air.

These DCF's are presented in Tables D-9 and D-10 in units of mrem per year for a unit concentration of a radionuclide at the biota access location--i.e., pCi/m^2 for DCF4 and pCi/m^3 for DCF5. All DCF's have been obtained from Reference 11. For each case, DCF's for photons and electrons have been calculated for tissue-equivalent material at the body surface of an exposed individual. For internal body organs, only photons have been considered (Ref. 11).

D.2.3 Translocation Factors

The remaining parameters in the equations listed in Table D-3 may be termed translocation parameters (also referred to as uptake factors or pathway parameters). Some of these are radionuclide-specific and are used to track the transfer of radionuclides through food products. Five sets of these transfer factors are listed in Tables D-11 through D-14 as obtained from the literature. A number of literature sources have been considered, and a comparative compilation of the factors obtained from the literature is presented in the tables, along with the actual factors used in this report. These five sets of transfer factors are summarized below:

000421

Symbol	Definition	Units	Table
f_1	Soil-to-Plant Transfer Factor (pCi/kg in fresh vegetation per pCi/kg in soil)	Dimentionless	D-11
f_4	Feed or Water-to-Meat Transfer Factor (pCi/kg in meat per pCi/day ingested by beef cattle)	day/kg	D-12
f_6	Feed or Water-to-Animal Product (Milk) Transfer Factor (pCi/ℓ in milk per pCi/day ingested by cow)	day/ℓ	D-13
f_{12}	Water-to-Fish Transfer Factor (pCi/kg of fresh fish per pCi/ℓ of water concentration)	ℓ/kg	D-14
$f_{12}P$	Water-to-Freshwater Seafood Transfer Factor (pCi/kg of fresh seafood per pCi/ℓ of water concentration)	ℓ/kg	D-14

In selecting a particular transfer factor for use in this report, more recent references from the literature have generally been utilized. In doing so, the intent was to try to provide a reasonable yet conservative estimate of radionuclide transfer. Examination of the tables reveals for a number of elements a considerable spread in transfer factor values depending upon the reference cited. This is not suprising when one considers that the cited transfer factors generally represent averages of a number of measurements involving different types of plant and animal food products. For example, Table D-11 lists factors for radionuclide uptake by means of root uptake from soil to plants used for food products. The transfer factors represented in the various citations were selected by the citation authors by considering uptake factors measures for several different types of plants, and these uptake factors can vary significantly depending upon the plant, environmental conditions, and so forth. The citations are furthermore believed to give generally conservative transfer factors. They are often meant as conservative "default" values to be used in the absence of site-specific information on crop production, environmental characteristics, and so forth.

For most of the transfer factors the inherent uncertainty makes little difference in the impacts calculated. This is because impacts are dominated for most radionuclides by exposures from other pathways than food pathways. This is the case for impacts associated with Co-60 and Cs-137, for example, which are dominated by direct external radiation pathways, or impacts associated with Pu-239, which are dominated by inhalation pathways. For some radionuclides, however, food ingestion pathways are more significant, and so for these radionuclides selection of the soil-to-plant transfer factor in Table D-11 becomes more critical. Radionuclides which fall into this category include carbon-14 and radium-226. For carbon-14, for example, Reference 16 indicates that the currently used soil-to-plant transfer factor may be as much as a factor of 10 too large. Additional work is recommended in determining appropriate root uptake factors for these and other radionuclides of concern.

Other parameters used in the calculations are listed in Tables D-15 and D-16.

D.2.4 Lists of Pathway Dose Conversion Factors

The pathway dose conversion factors used in this report are listed in Tables D-17 through D-23. These PDCF's are given in terms of individual radionuclides and solubility classes, and also for 9 organs of the body plus an effective whole body equivalent as calculated using ICRP-26 methodology. All PDCF's are given in units of mrem/yr per Ci/m^3.

000423

Table D-11. f_1: Soil-to-Plant Transfer Factors (dimensionless)

Element	Ref 1	Ref 2	Ref 12	Ref 13	Ref 14	Ref 15
Hydrogen	4.8E+0(a)	4.8E+0				
Carbon	5.5E+0(b)	5.5E+0				
Sodium	5.2E-2	5.2E-2			4.6E-3	
Phosperous	1.1E+0	1.1E+0				
Sulphur	5.9E-1					
Chlorine	5.0E+0					
Calcium	3.6E-2					
Scandium	1.1E-3					
Chronium	2.5E-4	2.5E-4			1.3E-2	
Manganese	2.9E-2	2.9E-2			1.2E-1	
Iron	6.6E-4	6.6E-4			4.2E-4	
Cobalt	9.4E-3	9.4E-3			1.5E-2	
Nickel	1.9E-2	1.9E-2			2.1E-2	
Zinc	4.0E-1	4.0E-1			1.1E-1	
Selenium	1.3E+0					
Rubidium	1.3E-1	1.3E-1				
Strontium	1.7E-2	1.7E-2		2.9E-1	7.5E-2	
Zirconium	1.7E-4	1.7E-4			7.7E-4	
Niobium	9.4E-3	9.4E-3				
Molybdenum	1.2E-1	1.2E-1				
Technetium	2.5E-1	2.5E-1		1.1E+0		
Ruthenium	5.0E-1	5.0E-2			1.4E-3	
Silver	1.5E-1	1.5E-1				
Cadmium	3.0E-1					
Tin	2.5E-3					
Antimony	1.1E-2					
Iodine	2.0E-2	2.0E-2		5.5E-2	4.5E-3	
Cesium	1.0E-2	1.0E-2		9.3E-3	5.0E-3	
Barium	5.0E-3	5.0E-3			1.3E-3	
Lanthanum	2.5E-3	2.5E-3				
Cerium	2.5E-3	2.5E-3			7.3E-4	
Europium	2.5E-3					
Ytterbium	2.5E-3					
Lead	6.8E-2		4.0E-3	3.9E-3		
Polonium	1.5E-1			2.6E-4		
Radon	3.5E+0					
Radium	3.1E-4		1.4E-3	6.2E-2		
Actinium	2.5E-3			2.5E-3		
Thorium	4.2E-3		4.2E-3	3.5E-4		
Protactinium	2.5E-3			2.5E-3		
Uranium	2.5E-3		2.5E-3	2.9E-4		
Neptunium	2.5E-3	2.5E-3			6.0E-2	
Plutonium	2.5E-4			2.0E-4		5.6E-4
Americium	2.5E-4					5.6E-3
Curium	2.5E-3					
Californium	2.5E-3					

(a) Values selected for use in this report have been underlined.
(b) For carbon-14, Reference 16 suggests that a transfer factor equal to 5.5E-1 may be more appropriate.

Table D-12. f_4: Feed- and Water-to-Meat Transfer Factors (day/kg)

Element	Ref 1	Ref 2	Ref 12	Ref 13	Ref 17	Ref 15
Hydrogen	1.2E-2[a]	1.2E-2				
Carbon	3.1E-2	3.1E-2				
Sodium	3.0E-2	3.0E-2			8.3E-2	
Phosphorus	4.6E-2	4.6E-2			5.7E-2	
Sulphur	1.0E-1					
Chlorine	8.0E-2					
Calcium	4.0E-3				7.2E-4	
Scandium	1.6E-2					
Chromium	2.4E-3	2.4E-3			9.2E-3	
Manganese	8.0E-4	8.0E-4			3.9E-4	
Iron	4.0E-2	4.0E-2			1.9E-2	
Cobalt	1.3E-2	1.3E-2			9.7E-3	
Nickel	5.3E-3	5.3E-3			2.0E-3	
Zinc	3.0E-2	3.0E-2			1.2E-1	
Selenium	1.5E-2					
Rubidium	3.1E-2	3.1E-2			1.1E-2	
Strontium	6.0E-4	6.0E-4		3.0E-4	5.9E-4	
Zirconium	3.4E-2	3.4E-2			2.1E-2	
Niobium	2.8E-1	2.8E-1			2.5E-1	
Molybdenum	8.0E-3	8.0E-3			6.8E-3	
Technetium	4.0E-1	4.0E-1		8.7E-3		
Ruthenium	4.0E-1	4.0E-1				
Silver	1.7E-2	1.7E-2			1.9E-3	
Cadmium	5.3E-4					
Tin	8.0E-2					
Antimony	4.0E-3					
Iodine	2.9E-3	2.9E-3		7.0E-3		
Cesium	4.0E-3	4.0E-3		1.4E-2		
Barium	3.2E-3	3.2E-3			9.7E-5	
Lanthanum	2.0E-4	2.0E-4				
Cerium	1.2E-3	1.2E-3				
Europium	4.8E-3					
Ytterbium	4.0E-3					
Lead	2.9E-4		7.1E-4	9.1E-4		
Polonium	1.2E-2			4.0E-3		
Radon	2.0E-2					
Radium	3.4E-2		5.1E-4	5.0E-4		
Actinium	6.0E-2			1.6E-6		
Thorium	2.0E-4		2.0E-4	1.6E-6		
Protactinium	8.0E-2			1.6E-6		
Uranium	2.4E-4		3.4E-4	1.6E-6		
Neptunium	2.0E-4	2.0E-4				
Plutonium	1.4E-5			4.1E-7		3.9E-4
Americium	2.0E-4					3.9E-3
Curium	2.0E-4					
Californium	2.0E-4					

(a) Values selected for use in this report have been underlined.

000425

Table D-13. f_6: Feed- and Water-to-Milk Transfer Factors (day/ℓ)

Element	Ref 1	Ref 2	Ref 12	Ref 13	Ref 18	Ref 19
Hydrogen	1.0E-2[a]	1.0E-2			1.4E-2	1.4E-2
Carbon	1.2E-2	1.2E-2			1.5E-2	1.5E-2
Sodium	4.0E-2	4.0E-2			3.5E-2	3.5E-2
Phosphorus	2.5E-2	2.5E-2			1.6E-2	1.6E-2
Sulphur	1.8E-2				1.6E-2	1.6E-2
Chlorine	5.0E-2				1.7E-2	1.7E-2
Calcium	8.0E-3				1.1E-2	1.1E-2
Scandium	5.0E-6					5.0E-6
Chromium	2.2E-3	2.2E-3			1.6E-3	1.0E-3
Manganese	2.5E-4	2.5E-4			3.3E-4	8.4E-5
Iron	1.2E-3	1.3E-3			2.7E-4	5.9E-5
Cobalt	1.0E-3	1.0E-3			1.8E-3	2.0E-3
Nickel	6.7E-3	6.7E-3			1.0E-3	1.0E-3
Zinc	3.9E-2	3.9E-2			1.0E-2	1.0E-2
Selenium	4.5E-2				4.0E-3	4.0E-3
Rubidium	3.0E-2	3.0E-2			1.2E-2	1.2E-2
Strontium	8.0E-4	8.0E-4		2.4E-3	1.4E-3	1.4E-3
Zirconium	5.0E-6	5.0E-6			3.0E-5	2.0E-2
Niobium	2.5E-3	2.5E-3				2.0E-2
Molybdenum	7.5E-3	7.5E-3			1.4E-3	1.4E-3
Technetium	2.5E-2	2.5E-2		9.9E-3		9.9E-3
Ruthenium	1.0E-6	1.0E-6			6.1E-7	6.1E-7
Silver	5.0E-2	5.0E-2			1.9E-2	1.0E-2
Cadmium	1.2E-4				1.0E-3	2.0E-3
Tin	2.5E-3				1.2E-3	1.2E-3
Antimony	1.5E-3				1.1E-4	2.0E-5
Iodine	6.0E-3	6.0E-3		1.0E-2	9.9E-3	9.9E-3
Cesium	1.2E-2	1.2E-2		5.6E-3	7.1E-3	7.1E-3
Barium	4.0E-4	4.0E-4			3.5E-4	3.5E-4
Lanthanum	5.0E-6	5.0E-6				2.0E-5
Cerium	6.0E-4	1.0E-4			2.0E-5	2.0E-5
Europium	5.0E-6					2.0E-5
Ytterbium	5.0E-6					2.0E-5
Lead	6.2E-4		1.2E-4	9.9E-5	2.6E-4	2.6E-4
Polonium	3.0E-4			1.2E-4	3.4E-4	1.4E-4
Radon	2.0E-2					2.0E-2
Radium	8.0E-3		5.9E-4	5.9E-4	4.5E-4	4.5E-4
Actinium	5.0E-6			2.0E-5		2.0E-5
Thorium	5.0E-6		5.0E-6	5.0E-6		5.0E-6
Protactinium	5.0E-6			5.0E-6		5.0E-6
Uranium	5.0E-4		6.1E-4	1.2E-4	6.1E-4	6.1E-4
Neptunium	5.0E-6	5.0E-6				5.0E-6
Plutonium	2.0E-6			4.5E-8	1.0E-7	1.0E-7
Americium	5.0E-6				4.1E-7	2.0E-5
Curium	5.0E-6					2.0E-5
Californium	5.0E-6					2.0E-5

(a) Values selected for use in this report have been underlined.

Table D-14. Water-to-Seafood Transfer Factors (1/kg)

Element	Freshwater Fish (f_{12}) Ref 1	Ref 2	Ref 15	Freshwater Seafood ($f_{12}P$) Ref 1	Ref 2
Hydrogen	9.0E-1[a]	9.0E-1		9.0E-1	9.0E-1
Carbon	4.6E+3	4.6E+3		9.1E+3	9.1E+3
Sodium	1.0E+2	1.0E+2		2.0E+2	2.0E+2
Phosphorus	1.0E+5	1.0E+5		2.0E+4	2.0E+4
Sulphur	7.5E+2			1.0E+2	
Chlorine	5.0E+1			1.0E+2	
Calcium	4.0E+1			3.3E+2	
Scandium	2.0E+0			1.0E+3	
Chromium	2.0E+2	2.0E+2		2.0E+3	2.0E+3
Manganese	4.0E+2	4.0E+2		9.0E+4	9.0E+4
Iron	1.0E+2	1.0E+2		3.2E+3	3.2E+3
Cobalt	5.0E+1	5.0E+1		2.0E+2	2.0E+2
Nickel	1.0E+2	1.0E+2		1.0E+2	1.0E+2
Zinc	2.0E+3	2.0E+3		1.0E+4	1.0E+4
Selenium	1.7E+2			1.7E+2	
Rubidium	2.0E+3	3.0E+3		1.0E+3	1.0E+3
Strontium	3.0E+1	3.0E+1		1.0E+2	1.0E+2
Zirconium	3.3E+0	3.3E+0		6.7E+0	6.7E+0
Niobium	3.0E+4	3.0E+4		1.0E+2	1.0E+2
Molybdenum	1.0E+1	1.0E+1		1.0E+1	1.0E+1
Technetium	1.5E+1	1.5E+1		5.0E+0	5.0E+0
Ruthenium	1.0E+1	1.0E+1		3.0E+2	3.0E+2
Silver	2.3E+0			7.7E+2	
Cadmium	2.0E+2			2.0E+3	
Tin	3.0E+3			1.0E+3	
Antimony	1.0E+0			1.0E+1	
Iodine	1.5E+1	1.5E+1		5.0E+0	5.0E+0
Cesium	2.0E+3	2.0E+3		1.0E+2	1.0E+3
Barium	4.0E+0	4.0E+0		2.0E+2	2.0E+2
Lanthanum	2.5E+1	2.5E+1		1.0E+3	1.0E+3
Cerium	1.0E+0	1.0E+0		1.0E+3	1.0E+3
Europium	2.5E+1			1.0E+3	
Ytterbium	2.5E+1			1.0E+3	
Lead	1.0E+2			1.0E+2	
Polonium	5.0E+2			2.0E+4	
Radon	1.0E+0			1.0E+0	
Radium	5.0E+1			2.5E+2	
Actinium	2.5E+1			1.0E+3	
Thorium	3.0E+1			5.0E+2	
Protactinium	1.1E+1			1.1E+2	
Uranium	2.0E+0			6.0E+1	
Neptunium	1.0E+1	1.0E+1		4.0E+2	4.0E+2
Plutonium	3.5E+0		2.5E+1	1.0E+2	
Americium	2.5E+1		2.5E+2	1.0E+3	
Curium	2.5E+1			1.0E+3	
Californium	2.5E+1			1.0E+3	

(a) Values selected for use in this report have been underlined.

000427

Table D-15. Radionuclide Independent Parameters Used in Calculations

Symbol	Definition	Value	Reference
CY	Crop Yield per unit area	1 Kg/m^2	20
D	Soil Density	1600 Kg/m^3	20
f_2	Consumption of plants by man	190 Kg/year	2
f_3	Consumption of plants by animals	50 Kg/day	2
f_5	Consumption of animals by man	95 Kg/year	2
f_7	Consumption of milk by man	0.3 ℓ/day	2
f_8	Consumption of water by beef cattle	50 ℓ/day	2
f_8^P	Consumption of water by milk cows	60 ℓ/day	2
f_{11}	Consumption of water by man	370 ℓ/year	2
f_{13}	Consumption of fish by man	6.9 Kg/year	2
f_{13}^P	Consumption of seafood by man	1.0 Kg/year	2
f_{14}	Resuspension factor	8.5E-9 m^{-1}	21
f_{15}	Inhalation rate of man	8.0E+3 m^3/year	22
f_{18}	Areal mass available for resuspension (top 1 cm of soil)	16 Kg/m^2	20
R	The fraction of initial activity deposited as fallout or contaminated water that is retained by foliage.	0.25	20
RI	Irrigation rate	3.7E-3 m^3/m^2-day	20
S_1	Fraction of activity deposited on foliage removed per unit time by weathering mechanisms.	4.83E-2 day^{-1}	20
S_2	Fraction of activity deposited in the root zone removed per unit time.	7.6E-04 day^{-1}	20
V_1	Settling velocity for elements other than iodine	8.0E-4 m/sec	20
V_2	for iodines	1.0E-2 m/sec	20
Z	Mass of soil in root zone	240 Kg/m^2	2

Table D-16. Intermediate Parameters Used in Calculations

Symbol	Transfer Factor	Description
P_1	f_1*f_2	Soil-Plant-Man
P_2	$f_1*f_3*f_4*f_5$	Soil-Plant-Animal-Man
P_3	$f_1*f_3*f_6*f_7*365$	Soil-Plant-Animal-Product-Man
PT	$P_1+P_2+P_3$	Total Soil-to-Plant-to-Man
P_1P	f_2	Plant-Man
P_2P	$f_3*f_4*f_5$	Plant-Animal-Man
P_3P	$f_3*f_6*f_7*365$	Plant-Animal-Product-Man
PTP	$P_1P+P_2P+P_3P$	Total Plant-to-Man
F_1	$f_8*f_4*f_5$	Water-Animal-Man
F_2	$f_8P*f_6*f_7*365$	Water-Animal-Product-Man
F_3	f_{11}	Water-Man
FT	$F_1+F_2+F_3$	Total Water-to-Man
F_{12_1}	$f_{12}*f_{13}$	Water-Fish-Man
F_{12_2}	$f_{12}P*f_{13}P$	Water-Seafood-Man
F_{12}	$F_{12_1}+F_{12_2}$	Total Seafood-to-Man
D_1	$86400*V/(S_2*Z)$	Soil Deposition by Fallout
D_2	$86400*RV/S_1$	Foliar Deposition by Fallout
W_1	$RI/(S_2*Z)$	Soil Deposition by Irrigation
W_2	$R*RI/S_1$	Foliar Deposition by Irrigation
	86400	seconds/day
	365	days/year

000429

TABLE D-17 . PDCF-1: PDCF for Chronic Airborne Pathways

Nuclide and Solubility		Lung	Stomach Wall	LLI Wall	Total Body	Kidneys	Liver	Red Marrow	Bone	Thyroid	ICRP
H-3	•	1.00E+09	1.00E+09	1.06E+09	1.00E+09	1.03E+09	9.92E+08	9.92E+08	7.88E+08	9.92E+08	1.01E+09
C-14	•	4.94E+07	5.88E+07	5.78E+07	1.13E+08	6.34E+07	7.10E+07	1.94E+08	4.06E+08	5.18E+07	8.72E+07
Na-22	D	1.20E+12	1.08E+12	1.08E+12	1.27E+12	1.19E+12	1.13E+12	1.25E+12	1.39E+12	1.46E+12	1.25E+12
P-32	D	6.10E+10	4.01E+09	3.13E+10	2.85E+10	2.40E+10	2.41E+10	8.88E+10	1.62E+11	2.41E+10	4.17E+10
P-32	W	7.90E+11	1.02E+10	8.32E+10	3.10E+10	1.69E+10	1.69E+10	6.21E+10	1.14E+11	1.69E+10	1.25E+11
P-33	D	8.80E+09	2.46E+09	5.48E+09	6.36E+09	2.06E+09	2.06E+09	1.10E+10	2.91E+10	2.06E+09	5.06E+09
P-33	W	1.25E+11	2.63E+09	1.11E+10	2.62E+10	1.50E+09	1.50E+09	7.96E+09	2.12E+10	1.50E+09	1.86E+10
S-35	D	6.04E+09	1.94E+09	3.94E+09	2.70E+09	1.69E+09	1.69E+09	1.69E+09	1.69E+09	1.69E+09	2.42E+09
S-35	W	1.50E+11	2.13E+09	8.24E+09	2.82E+10	1.34E+09	1.34E+09	1.34E+09	1.34E+09	1.34E+09	1.98E+10
Cl-36	D	3.94E+10	1.63E+10	1.49E+10	1.93E+10	1.49E+10	1.49E+10	1.49E+10	1.49E+10	1.49E+10	1.79E+10
Cl-36	W	1.35E+12	1.97E+10	1.49E+10	2.50E+11	1.49E+10	1.49E+10	1.49E+10	1.49E+10	1.49E+10	1.75E+11
Ca-45	W	2.86E+11	2.61E+09	4.09E+10	7.65E+10	1.33E+09	1.33E+10	8.64E+10	1.30E+11	1.33E+09	5.30E+10
Sc-46	Y	2.41E+12	1.06E+12	1.11E+12	1.42E+12	1.09E+12	1.10E+12	1.12E+12	1.18E+12	1.37E+12	1.31E+12
Cr-51	D	1.87E+10	1.68E+10	1.75E+10	1.98E+10	1.75E+10	1.69E+10	1.89E+10	2.33E+10	2.29E+10	1.98E+10
Cr-51	W	2.87E+10	1.68E+10	1.91E+10	2.16E+10	1.73E+10	1.69E+10	1.87E+10	2.29E+10	2.27E+10	2.06E+10
Cr-51	Y	3.34E+10	1.68E+10	1.93E+10	2.24E+10	1.73E+10	1.70E+10	1.87E+10	2.29E+10	2.27E+10	2.10E+10
Mn-54	D	4.85E+11	4.44E+11	4.41E+11	5.15E+11	4.88E+11	5.59E+11	5.07E+11	5.44E+11	5.88E+11	5.27E+11
Mn-54	W	6.50E+11	4.52E+11	4.48E+11	5.11E+11	4.73E+11	4.96E+11	4.92E+11	5.25E+11	5.91E+11	5.39E+11
Fe-55	W	2.56E+10	8.52E+07	2.92E+09	5.13E+09	8.72E+09	1.66E+10	8.64E+09	5.93E+09	8.57E+09	1.27E+10
Fe-55	Y	2.01E+11	1.04E+08	3.13E+09	4.97E+09	4.04E+09	7.66E+09	4.03E+09	2.76E+09	3.97E+09	3.18E+10
Fe-59	W	1.00E+12	5.89E+11	6.70E+11	6.76E+11	6.39E+11	6.39E+11	6.45E+11	6.79E+11	7.80E+11	7.39E+11
Fe-59	Y	1.26E+12	5.90E+11	6.65E+11	6.72E+11	6.22E+11	6.17E+11	6.32E+11	6.66E+11	7.70E+11	7.57E+11
Co-57	W	1.89E+11	6.82E+10	7.99E+10	8.35E+10	6.87E+10	7.25E+10	6.89E+10	1.18E+11	1.01E+11	9.95E+10
Co-57	Y	5.63E+11	7.86E+10	7.99E+10	9.51E+10	7.16E+10	8.41E+10	7.83E+10	1.26E+11	1.05E+11	1.54E+11
Co-58	W	7.65E+11	5.14E+11	5.38E+11	5.84E+11	5.37E+11	5.27E+11	5.57E+11	6.03E+11	6.78E+11	6.17E+11
Co-58	Y	1.00E+12	5.30E+11	5.38E+11	5.96E+11	5.42E+11	5.43E+11	5.65E+11	6.10E+11	6.88E+11	6.55E+11
Co-60	W	2.27E+12	1.28E+12	1.35E+12	1.44E+12	1.37E+12	1.39E+12	1.38E+12	1.43E+12	1.65E+12	1.59E+12
Co-60	Y	1.16E+13	1.94E+12	1.36E+12	1.96E+12	1.69E+12	2.12E+12	1.76E+12	1.72E+12	2.01E+12	3.23E+12
Ni-59	D	1.07E+10	1.02E+10	1.14E+10	1.07E+10	1.02E+10	1.02E+10	1.05E+10	1.04E+10	1.11E+10	1.07E+10
Ni-59	W	3.55E+10	3.14E+09	6.64E+09	7.53E+09	3.08E+09	3.08E+09	3.14E+09	3.14E+09	3.39E+09	7.53E+09
Ni-63	D	2.58E+10	2.44E+10	2.82E+10	2.48E+10	2.44E+10	2.43E+10	2.43E+10	2.43E+10	2.43E+10	2.48E+10
Ni-63	W	9.12E+10	7.61E+09	1.99E+10	1.84E+10	7.34E+09	7.31E+09	7.31E+09	7.31E+09	7.31E+09	1.84E+10
Zn-65	D	3.89E+11	3.64E+11	3.81E+11	4.25E+11	4.42E+11	4.26E+11	4.51E+11	4.61E+11	4.71E+11	4.63E+11
Zn-65	W	4.97E+11	3.47E+11	3.52E+11	3.97E+11	3.97E+11	3.91E+11	4.06E+11	4.18E+11	4.46E+11	4.38E+11
Zn-65	Y	9.07E+11	3.76E+11	3.37E+11	4.12E+11	3.96E+11	4.20E+11	4.08E+11	4.17E+11	4.59E+11	4.95E+11
Se-75	D	2.58E+11	2.45E+11	2.32E+11	2.97E+11	3.65E+11	3.28E+11	2.61E+11	3.41E+11	3.10E+11	2.85E+11
Se-75	W	3.79E+11	2.46E+11	2.29E+11	3.14E+11	3.40E+11	3.15E+11	2.60E+11	3.40E+11	3.10E+11	2.95E+11
Rb-86	D	1.10E+11	5.06E+10	5.44E+10	1.05E+11	1.37E+11	1.34E+11	1.37E+11	1.40E+11	1.49E+11	1.37E+11
Sr-85	D	2.92E+11	2.66E+11	2.67E+11	3.17E+11	2.83E+11	2.70E+11	3.13E+11	3.56E+11	3.57E+11	3.03E+11
Sr-85	Y	4.91E+11	2.76E+11	2.77E+11	3.52E+11	2.83E+11	2.83E+11	2.99E+11	3.36E+11	3.57E+11	3.28E+11
Sr-89	D	5.25E+10	3.23E+09	1.10E+11	3.12E+10	1.75E+10	1.75E+10	1.06E+11	2.19E+11	1.75E+10	4.59E+10
Sr-89	Y	2.48E+12	9.83E+09	4.21E+11	3.82E+10	4.20E+08	4.19E+08	2.19E+09	4.43E+09	4.40E+08	3.44E+11
Sr-90	D	7.91E+10	1.58E+09	1.13E+11	1.92E+12	1.17E+11	1.17E+11	8.80E+12	1.76E+13	1.17E+11	1.68E+12
Sr-90	Y	6.80E+13	2.29E+11	7.12E+12	1.20E+12	2.92E+10	1.52E+11	9.60E+11	1.84E+12	2.92E+10	1.16E+13
Zr-95	W	9.82E+11	4.33E+11	5.16E+11	5.03E+11	4.49E+11	4.42E+11	4.85E+11	5.54E+11	5.71E+11	5.72E+11
Zr-95	Y	1.47E+12	4.48E+11	5.20E+11	5.10E+11	4.50E+11	4.57E+11	4.72E+11	5.17E+11	5.76E+11	6.35E+11
Nb-94	W	2.09E+12	8.95E+11	1.02E+12	1.20E+12	1.04E+12	9.07E+11	1.06E+12	1.22E+12	1.15E+12	1.20E+12
Nb-94	Y	2.30E+13	1.73E+12	1.05E+12	4.22E+12	1.41E+12	1.96E+12	1.54E+12	1.53E+12	1.73E+12	4.22E+12
Nb-95	Y	6.64E+11	4.04E+11	4.35E+11	4.59E+11	4.20E+11	4.10E+11	4.36E+11	4.71E+11	5.35E+11	4.92E+11
Mo-99	D	1.17E+11	8.19E+10	8.05E+10	9.68E+10	1.50E+11	1.92E+11	9.08E+10	1.08E+11	1.10E+11	1.09E+11
Mo-99	Y	2.36E+11	8.54E+10	2.41E+11	9.44E+10	8.60E+10	8.46E+10	8.65E+10	9.94E+10	1.09E+11	1.26E+11
Tc-99	D	7.70E+09	3.92E+09	4.07E+09	1.35E+09	2.78E+09	3.82E+09	1.95E+09	2.49E+09	8.56E+10	5.66E+09
Tc-99	W	4.18E+11	4.56E+09	1.33E+10	7.10E+09	2.46E+09	3.37E+09	1.72E+09	2.20E+09	7.57E+10	5.80E+10
Tc-99m	D	7.35E+10	6.52E+10	6.39E+10	7.96E+10	6.69E+10	6.63E+10	6.63E+10	1.14E+11	1.01E+11	7.97E+10
Tc-99m	W	7.43E+10	6.52E+10	6.38E+10	7.96E+10	6.68E+10	6.63E+10	6.62E+10	1.14E+11	1.01E+11	7.98E+10
Ru-103	Y	7.33E+11	2.58E+11	3.33E+11	3.00E+11	2.65E+11	2.63E+11	2.80E+11	3.18E+11	3.36E+11	3.59E+11
Ru-106	Y	3.05E+13	1.59E+11	1.22E+12	6.14E+11	1.81E+11	1.96E+11	1.89E+11	2.08E+11	2.13E+11	4.30E+12
Ag-108	D	1.06E+12	9.61E+11	8.86E+11	1.19E+12	1.11E+12	2.76E+12	9.96E+11	1.09E+12	1.15E+12	1.19E+12
Ag-108	W	1.69E+12	9.20E+11	9.32E+11	1.16E+12	9.72E+11	1.48E+12	9.72E+11	1.07E+12	1.16E+12	1.16E+12
Ag-108	Y	1.44E+13	1.74E+12	9.78E+11	3.22E+12	1.40E+12	2.29E+12	1.54E+12	1.52E+12	1.71E+12	3.22E+12
Ag-110	D	1.70E+12	1.54E+12	1.44E+12	1.87E+12	1.77E+12	3.77E+12	1.60E+12	1.69E+12	1.87E+12	1.87E+12
Ag-110	W	2.39E+12	1.48E+12	1.50E+12	1.80E+12	1.57E+12	2.12E+12	1.56E+12	1.67E+12	1.88E+12	1.80E+12
Ag-110	Y	5.01E+12	1.66E+12	1.50E+12	2.19E+12	1.62E+12	1.90E+12	1.68E+12	1.76E+12	2.01E+12	2.19E+12
Cd-109	D	1.01E+11	8.67E+10	1.00E+11	1.29E+12	1.17E+13	2.11E+12	1.03E+11	9.59E+10	8.24E+10	9.15E+11
Cd-109	W	4.34E+11	2.79E+10	8.83E+10	4.22E+11	3.38E+12	6.15E+10	3.08E+10	3.05E+10	2.63E+10	3.20E+11
Cd-109	Y	2.31E+12	1.35E+10	7.51E+10	5.17E+11	9.94E+11	1.94E+10	1.38E+10	1.47E+10	1.08E+10	3.64E+11
Sn-113	D	1.74E+11	1.48E+11	1.83E+11	1.93E+11	1.59E+11	1.49E+11	2.23E+11	3.30E+11	2.01E+11	1.93E+11
Sn-113	W	6.91E+11	1.46E+11	2.47E+11	2.47E+11	1.50E+11	1.46E+11	1.72E+11	2.20E+11	1.93E+11	2.47E+11
Sn-126	D	2.86E+12	2.57E+12	2.79E+12	3.24E+12	2.76E+12	2.61E+12	4.09E+12	6.23E+12	3.39E+12	3.24E+12
Sn-126	W	6.86E+12	2.38E+12	2.93E+12	3.35E+12	2.49E+12	2.41E+12	2.92E+12	3.72E+12	3.15E+12	3.35E+12
Sb-124	D	1.01E+12	8.99E+11	9.86E+11	1.05E+12	9.65E+11	9.68E+11	1.01E+12	1.14E+12	1.19E+12	1.05E+12
Sb-124	W	2.17E+12	9.22E+11	1.19E+12	1.21E+12	9.65E+11	9.46E+11	9.99E+11	1.08E+12	1.19E+12	1.21E+12
Sb-125	D	2.56E+11	2.26E+11	2.46E+11	2.80E+11	2.46E+11	2.51E+11	2.57E+11	3.65E+11	3.11E+11	2.80E+11
Sb-125	W	8.80E+11	2.36E+11	3.11E+11	3.61E+11	2.47E+11	2.45E+11	2.54E+11	3.13E+11	3.14E+11	3.61E+11
I-125	D	8.56E+10	5.90E+10	5.15E+10	4.55E+11	1.41E+11	6.02E+10	3.14E+10	1.44E+11	6.57E+12	3.15E+11
I-129	D	8.69E+10	5.92E+10	5.08E+10	1.69E+11	1.37E+11	6.73E+10	3.53E+10	1.45E+11	4.02E+13	1.35E+12
I-131	D	2.71E+12	2.46E+12	2.40E+12	2.95E+12	2.64E+12	2.50E+12	2.73E+12	3.36E+12	1.22E+13	3.22E+12
Cs-134	D	1.11E+12	1.04E+12	1.06E+12	1.26E+12	1.37E+12	1.35E+12	1.35E+12	1.42E+12	1.47E+12	1.42E+12
Cs-135	D	5.12E+09	3.06E+08	6.81E+08	3.52E+10	5.98E+10	5.98E+10	5.98E+10	6.90E+10	5.98E+10	5.35E+10
Cs-136	D	1.20E+12	1.10E+12	1.08E+12	1.27E+12	1.20E+12	1.15E+12	1.22E+12	1.35E+12	1.50E+12	1.29E+12

TABLE D-17 . PDCF-1 (Continued)

Nuclide and Solubility	Lung	Stomach Wall	LLI Wall	Total Body	Kidneys	Liver	Red Marrow	Bone	Thyroid	ICRP
Cs-137 D	4.56E+11	4.12E+11	4.23E+11	3.75E+11	7.30E+11	7.22E+11	7.23E+11	7.93E+11	7.67E+11	7.35E+11
Ba-140 D	1.81E+11	1.04E+11	2.35E+11	1.28E+11	1.12E+11	1.07E+11	1.33E+11	1.66E+11	1.46E+11	1.51E+11
La-140 W	1.31E+12	1.08E+12	1.23E+12	1.23E+12	1.16E+12	1.11E+12	1.17E+12	1.25E+12	1.42E+12	1.27E+12
Ce-141 Y	5.48E+11	4.30E+10	1.60E+11	5.66E+10	4.29E+10	4.55E+10	4.08E+10	6.91E+10	6.03E+10	1.21E+11
Ce-141 W	3.83E+11	4.29E+10	1.52E+11	5.83E+10	6.63E+10	1.26E+11	4.59E+10	8.53E+10	6.06E+10	1.09E+11
Ce-141 D	6.30E+10	4.27E+10	7.92E+10	7.35E+10	1.77E+11	5.03E+11	7.10E+10	1.62E+11	6.30E+10	9.97E+10
Ce-144 Y	2.32E+13	6.37E+10	1.07E+12	4.09E+11	2.21E+11	6.78E+11	9.78E+10	1.58E+11	4.75E+10	3.20E+12
Ce-144 W	5.47E+12	5.57E+10	9.86E+11	4.43E+11	1.87E+12	6.51E+12	6.89E+11	1.16E+12	7.66E+10	1.43E+12
Ce-144 D	1.68E+11	5.05E+10	3.46E+11	1.39E+12	8.03E+12	2.72E+13	1.23E+12	4.92E+12	1.91E+11	2.79E+12
Eu-152 W	2.30E+12	1.13E+12	9.79E+11	2.40E+12	1.68E+12	1.08E+13	2.93E+12	7.78E+12	9.97E+11	2.40E+12
Eu-154 W	2.99E+12	1.13E+12	5.88E+11	2.98E+12	1.64E+12	1.32E+13	3.79E+12	1.62E+13	1.03E+12	2.98E+12
Yb-169 W	4.45E+11	1.55E+11	2.33E+11	2.70E+11	1.73E+11	1.66E+11	1.63E+11	4.89E+11	2.47E+11	2.33E+11
Yb-169 Y	5.80E+11	1.57E+11	2.38E+11	2.82E+11	1.69E+11	1.63E+11	1.45E+11	2.90E+11	2.47E+11	2.42E+11
Pb-210 W	4.96E+13	1.03E+10	3.77E+11	2.80E+13	2.64E+13	2.48E+13	1.76E+13	1.60E+14	5.36E+12	2.08E+13
Po-210 W	3.68E+14	1.78E+10	7.03E+11	1.04E+13	1.12E+14	2.00E+13	6.64E+12	2.96E+12	6.40E+12	7.01E+13
Po-210 D	8.00E+12	5.78E+09	2.28E+11	1.68E+13	3.68E+14	6.40E+13	2.16E+13	9.60E+12	2.08E+13	7.96E+13
Rn-222 *	2.34E+12	2.14E+12	2.12E+12	2.46E+12	2.30E+12	2.18E+12	2.35E+12	2.56E+12	2.86E+12	2.46E+12
Ra-226 W	4.50E+14	2.17E+12	3.56E+12	4.01E+13	7.58E+12	7.46E+12	2.23E+13	1.87E+14	8.15E+12	7.05E+13
Ra-228 W	3.89E+13	5.27E+11	1.00E+12	2.05E+13	4.80E+12	6.45E+12	1.41E+13	1.13E+14	4.93E+12	1.49E+13
Ac-227 Y	8.24E+15	8.09E+11	1.46E+13	8.08E+14	7.28E+14	5.55E+15	3.60E+15	3.58E+16	5.23E+13	4.16E+15
Ac-227 W	6.72E+14	5.08E+11	1.98E+12	1.30E+15	1.97E+15	1.53E+16	9.76E+15	9.76E+16	1.12E+14	5.45E+15
Th-228 Y	5.73E+15	2.45E+12	2.49E+13	1.54E+14	1.23E+13	2.17E+13	2.98E+14	3.21E+15	9.08E+12	1.07E+15
Th-228 W	9.38E+14	1.89E+12	7.37E+12	1.78E+14	2.11E+13	9.77E+13	1.70E+15	1.85E+16	2.22E+13	9.06E+14
Th-229 Y	9.84E+15	2.31E+12	1.23E+13	8.57E+14	3.88E+13	1.21E+14	5.27E+15	6.26E+16	3.51E+13	5.08E+15
Th-229 W	9.29E+14	1.77E+12	4.21E+12	1.14E+15	3.64E+13	1.77E+14	1.27E+16	1.52E+17	3.59E+13	6.25E+15
Th-230 Y	4.21E+15	2.15E+10	8.00E+11	3.04E+14	8.80E+12	4.40E+13	2.03E+15	3.18E+16	8.80E+12	2.07E+15
Th-230 W	4.32E+14	2.21E+10	7.48E+11	4.48E+14	2.08E+13	1.04E+14	4.98E+15	7.82E+16	2.24E+13	3.02E+15
Th-232 Y	3.63E+15	6.12E+10	8.80E+11	3.04E+14	8.80E+12	3.92E+13	2.17E+15	3.62E+16	8.80E+12	2.13E+15
Th-232 W	3.76E+14	7.01E+10	7.39E+11	4.72E+14	1.84E+13	8.80E+13	5.22E+15	8.80E+16	1.92E+13	3.33E+15
Pa-231 Y	4.75E+15	2.15E+11	1.37E+12	1.10E+15	1.54E+15	1.19E+16	6.46E+15	7.49E+16	9.60E+13	5.27E+15
Pa-231 W	4.64E+14	3.28E+11	1.05E+12	2.09E+15	3.53E+15	2.74E+16	1.47E+16	1.73E+17	2.08E+14	9.28E+15
U-232 Y	7.10E+15	4.47E+11	8.80E+12	4.24E+14	4.64E+13	3.60E+13	7.04E+14	7.63E+15	1.44E+13	2.59E+15
U-232 W	5.36E+14	6.84E+10	1.04E+12	6.08E+13	7.76E+13	2.96E+12	4.56E+14	5.03E+15	1.52E+12	2.80E+14
U-232 D	8.80E+12	1.49E+11	4.10E+11	1.60E+14	2.56E+14	2.32E+12	1.38E+15	1.53E+16	2.40E+12	6.42E+14
U-233 Y	4.34E+15	3.10E+10	8.80E+11	1.36E+14	1.36E+13	1.24E+11	1.92E+12	2.88E+13	1.31E+11	8.96E+14
U-233 W	4.48E+14	4.97E+10	7.54E+11	2.08E+13	4.00E+13	3.55E+11	5.60E+12	8.00E+13	3.75E+11	6.24E+13
U-233 D	7.60E+12	1.14E+11	3.30E+11	4.56E+13	1.36E+14	1.20E+12	1.84E+13	2.80E+14	1.28E+12	2.03E+13
U-234 Y	4.29E+15	3.07E+10	8.80E+11	1.28E+14	1.36E+13	1.30E+11	1.92E+12	2.80E+13	1.29E+11	8.88E+14
U-234 W	4.40E+14	4.93E+10	7.53E+11	2.00E+13	3.92E+13	3.71E+11	5.44E+12	8.00E+13	3.71E+11	6.17E+13
U-234 D	7.52E+12	1.12E+11	3.28E+11	4.48E+13	1.28E+14	1.20E+12	1.84E+13	2.72E+14	1.20E+12	2.00E+13
U-235 Y	3.87E+15	2.80E+11	2.08E+12	1.20E+14	1.21E+13	3.36E+11	1.61E+12	2.33E+13	2.89E+11	7.98E+14
U-235 W	4.00E+14	1.45E+11	9.60E+11	1.85E+13	3.53E+13	4.13E+11	4.33E+12	6.81E+13	4.66E+11	5.55E+13
U-235 D	6.89E+12	1.96E+11	4.29E+11	4.09E+13	1.20E+14	1.12E+12	1.45E+13	2.24E+14	1.24E+12	1.73E+13
U-236 Y	4.05E+15	3.07E+10	8.00E+11	1.28E+14	1.28E+13	1.24E+11	1.60E+12	2.56E+13	1.22E+11	8.32E+14
U-236 W	4.16E+14	5.18E+10	7.14E+11	1.92E+13	3.68E+13	3.54E+11	4.72E+12	7.36E+13	3.50E+11	5.81E+13
U-236 D	7.12E+12	1.24E+11	3.26E+11	4.24E+13	1.20E+14	1.20E+12	1.60E+13	2.48E+14	1.12E+12	1.84E+13
U-238 Y	3.84E+15	1.04E+12	3.19E+12	1.21E+14	1.30E+13	1.13E+12	2.65E+12	2.44E+13	1.46E+12	7.90E+14
U-238 W	3.93E+14	1.02E+12	1.83E+12	1.95E+13	3.62E+13	1.31E+12	5.53E+12	6.76E+13	1.66E+12	5.56E+13
U-238 D	7.69E+12	1.07E+12	1.26E+12	4.11E+13	1.21E+14	2.02E+12	1.63E+13	2.25E+14	2.45E+12	1.82E+13
Np-237 Y	4.55E+15	4.98E+11	1.56E+12	5.28E+14	8.16E+14	6.31E+15	2.40E+15	3.39E+16	4.66E+13	2.77E+15
Np-237 W	4.72E+14	7.53E+11	1.40E+12	9.76E+14	2.01E+15	1.55E+16	5.94E+15	8.40E+16	1.12E+14	4.58E+15
Pu-236 Y	3.56E+15	2.77E+10	1.04E+12	9.60E+13	5.28E+13	4.00E+14	1.44E+14	1.67E+15	2.72E+12	6.36E+14
Pu-236 W	5.12E+14	2.33E+10	8.80E+11	1.20E+14	2.56E+14	1.98E+15	6.48E+14	7.54E+15	1.20E+13	5.27E+14
Pu-238 Y	4.86E+15	2.32E+10	9.60E+11	4.80E+14	7.20E+14	5.60E+15	2.09E+15	2.62E+16	4.08E+13	2.46E+15
Pu-238 W	5.12E+14	2.22E+10	8.80E+11	8.88E+14	1.84E+15	1.43E+16	5.37E+15	6.72E+16	1.04E+14	3.91E+15
Pu-239 Y	4.64E+15	2.18E+10	8.80E+11	5.36E+14	8.24E+14	6.38E+15	2.42E+15	3.33E+16	4.64E+13	2.78E+15
Pu-239 W	4.80E+14	2.08E+10	8.00E+11	9.92E+14	2.04E+15	1.58E+16	6.05E+15	8.32E+16	1.20E+14	4.60E+15
Pu-240 Y	4.63E+15	2.20E+10	8.80E+11	5.36E+14	8.24E+14	6.36E+15	2.42E+15	3.32E+16	4.64E+13	2.77E+15
Pu-240 W	4.80E+14	2.10E+10	8.00E+11	5.36E+14	2.04E+15	1.58E+16	6.04E+15	8.32E+16	1.20E+14	4.59E+15
Pu-241 Y	8.80E+12	8.24E+08	5.50E+09	9.60E+12	1.76E+13	1.36E+14	5.44E+13	6.80E+14	1.28E+12	4.30E+13
Pu-241 W	1.23E+11	1.45E+09	4.98E+09	2.00E+13	3.92E+13	3.04E+14	1.28E+14	1.55E+15	2.40E+12	8.72E+13
Pu-242 Y	4.40E+15	2.20E+10	8.80E+11	5.04E+14	7.84E+14	6.06E+15	2.30E+15	3.35E+16	4.48E+13	2.69E+15
Pu-242 W	4.56E+14	2.17E+10	7.79E+11	9.44E+14	1.94E+15	1.50E+16	5.74E+15	8.40E+16	1.12E+14	4.51E+15
Pu-244 Y	4.38E+15	1.28E+12	5.36E+12	5.04E+14	7.76E+14	5.99E+15	2.17E+15	3.39E+16	4.42E+13	2.67E+15
Pu-244 W	4.48E+14	1.44E+12	2.56E+12	9.36E+14	1.92E+15	1.49E+16	5.41E+15	8.48E+16	1.12E+14	4.49E+15
Am-241 Y	4.92E+15	8.03E+10	1.05E+12	5.52E+14	8.48E+14	6.59E+15	2.50E+15	3.12E+16	4.80E+13	2.78E+15
Am-241 W	5.12E+14	1.04E+11	8.89E+11	1.02E+15	2.10E+15	1.63E+16	6.22E+15	7.78E+16	1.20E+14	4.50E+15
Am-243 Y	4.76E+15	5.85E+11	3.06E+12	5.52E+14	8.56E+14	6.58E+15	2.50E+15	3.34E+16	4.90E+13	2.82E+15
Am-243 W	4.88E+14	7.87E+11	1.62E+12	1.02E+15	2.10E+15	1.62E+16	6.22E+15	8.24E+16	1.20E+14	4.63E+15
Cm-242 Y	1.38E+15	2.16E+10	9.60E+11	2.40E+13	6.00E+12	4.64E+13	1.60E+13	1.84E+14	3.96E+11	1.86E+14
Cm-242 W	4.40E+14	2.30E+10	8.80E+11	2.80E+13	4.96E+13	3.84E+14	1.20E+14	1.34E+15	2.40E+12	1.41E+14
Cm-243 Y	5.02E+15	2.38E+11	1.26E+12	3.84E+14	5.44E+14	4.21E+15	1.52E+15	1.72E+16	2.97E+13	1.97E+15
Cm-243 W	5.44E+14	3.16E+11	1.18E+12	6.96E+14	1.46E+15	1.13E+16	4.10E+15	4.62E+16	8.01E+13	2.88E+15
Cm-244 Y	4.86E+15	2.42E+10	1.04E+12	3.12E+14	4.16E+14	3.18E+15	1.13E+15	1.30E+16	2.16E+13	1.64E+15
Cm-244 W	5.36E+14	2.35E+10	8.80E+11	5.44E+14	1.16E+15	8.96E+15	3.19E+15	3.65E+16	6.16E+13	2.28E+15
Cm-248 Y	1.78E+16	2.72E+13	1.44E+13	2.08E+15	3.21E+15	2.47E+16	2.38E+15	3.42E+16	1.92E+14	7.02E+15
Cm-248 W	1.86E+15	4.00E+13	2.56E+13	3.86E+15	7.89E+15	6.08E+16	5.89E+15	8.48E+16	4.64E+14	8.56E+15
Cf-252 Y	6.97E+15	2.56E+12	2.72E+12	1.68E+14	9.60E+13	7.52E+14	1.20E+14	1.30E+15	5.44E+12	1.10E+15
Cf-252 W	1.04E+15	2.08E+12	3.20E+12	2.32E+14	4.88E+14	3.78E+15	6.16E+14	6.58E+15	2.40E+13	7.07E+14

000431

TABLE D-18 . PDCF-2: PDCF for Acute Airborne Pathways

Nuclide and Solubility		Lung	Stomach Wall	LLI Wall	Total Body	Kidneys	Liver	Red Marrow	Bone	Thyroid	ICRP
H-3	•	1.00E+09	1.00E+09	1.06E+09	1.00E+09	1.03E+09	9.92E+08	9.92E+08	7.88E+08	9.92E+08	1.01E+09
C-14	•	4.94E+07	5.88E+07	5.78E+07	1.13E+08	6.34E+07	7.10E+07	1.94E+08	4.06E+08	5.18E+07	8.72E+07
Na-22	D	3.55E+11	3.07E+11	3.14E+11	3.71E+11	3.54E+11	3.37E+11	3.88E+11	4.45E+11	4.13E+11	3.78E+11
P-32	D	6.10E+10	4.01E+09	3.13E+10	2.85E+10	2.40E+10	2.41E+10	8.88E+10	1.62E+11	2.41E+10	4.17E+10
P-32	W	7.90E+11	1.02E+10	8.32E+10	3.10E+10	1.69E+10	1.69E+10	6.21E+10	1.14E+11	1.69E+10	1.25E+11
P-33	D	8.80E+09	2.46E+09	5.48E+09	6.36E+09	2.06E+09	2.06E+09	1.10E+10	2.91E+10	2.06E+09	5.06E+09
P-33	W	1.25E+11	2.63E+09	1.11E+10	2.62E+10	1.50E+09	1.50E+09	7.96E+09	2.12E+10	1.50E+09	1.86E+10
S-35	D	6.04E+09	1.94E+09	3.94E+09	2.70E+09	1.69E+09	1.69E+09	1.69E+09	1.69E+09	1.69E+09	2.42E+09
S-35	W	1.50E+11	2.13E+09	8.24E+09	2.82E+10	1.34E+09	1.34E+09	1.34E+09	1.34E+09	1.34E+09	1.98E+10
Cl-36	D	3.94E+10	1.63E+10	1.49E+10	1.93E+10	1.49E+10	1.49E+10	1.49E+10	1.49E+10	1.49E+10	1.79E+10
Cl-36	W	1.35E+12	1.97E+10	1.49E+10	2.50E+11	1.49E+10	1.49E+10	1.49E+10	1.49E+10	1.49E+10	1.75E+11
Ca-45	W	2.86E+11	2.61E+09	4.09E+10	7.65E+10	1.33E+09	1.33E+10	8.64E+10	1.30E+11	1.33E+09	5.30E+10
Sc-46	Y	1.63E+12	3.39E+11	3.93E+11	5.89E+11	3.10E+11	3.68E+11	3.28E+11	3.31E+11	3.86E+11	5.03E+11
Cr-51	D	5.49E+09	4.71E+09	5.66E+09	5.57E+09	4.84E+09	4.67E+09	5.29E+09	6.37E+09	6.07E+09	5.55E+09
Cr-51	W	1.55E+10	4.68E+09	7.26E+09	7.37E+09	4.58E+09	4.69E+09	5.05E+09	6.01E+09	5.86E+09	6.38E+09
Cr-51	Y	2.02E+10	4.74E+09	7.41E+09	8.22E+09	4.56E+09	4.79E+09	5.05E+09	5.98E+09	5.86E+09	6.79E+09
Mn-54	D	1.46E+11	1.29E+11	1.34E+11	1.53E+11	1.53E+11	2.41E+11	1.62E+11	1.71E+11	1.60E+11	1.65E+11
Mn-54	W	3.10E+11	1.38E+11	1.40E+11	1.49E+11	1.38E+11	1.78E+11	1.46E+11	1.51E+11	1.63E+11	1.77E+11
Fe-55	W	2.56E+10	8.37E+07	2.91E+09	5.06E+09	8.72E+09	1.66E+10	8.64E+09	5.92E+09	8.56E+09	1.26E+10
Fe-55	Y	2.01E+11	1.03E+08	3.13E+09	4.90E+09	4.04E+09	7.66E+09	4.02E+09	2.75E+09	3.96E+09	3.17E+10
Fe-59	W	5.59E+11	1.79E+11	2.60E+11	2.01E+11	1.97E+11	2.19E+11	1.95E+11	2.00E+11	2.23E+11	2.65E+11
Fe-59	Y	8.11E+11	1.79E+11	2.56E+11	1.97E+11	1.79E+11	1.98E+11	1.83E+11	1.86E+11	2.13E+11	2.82E+11
Co-57	W	1.36E+11	2.11E+10	3.45E+10	2.55E+10	2.08E+10	2.50E+10	2.33E+10	3.36E+10	2.83E+10	4.15E+10
Co-57	Y	5.11E+11	3.16E+10	3.45E+10	3.71E+10	2.37E+10	3.66E+10	3.26E+10	4.12E+10	3.23E+10	9.59E+10
Co-58	W	3.68E+11	1.47E+11	1.78E+11	1.61E+11	1.46E+11	1.55E+11	1.53E+11	1.61E+11	1.81E+11	1.94E+11
Co-58	Y	6.05E+11	1.63E+11	1.78E+11	1.73E+11	1.52E+11	1.71E+11	1.61E+11	1.67E+11	1.90E+11	2.32E+11
Co-60	W	1.35E+12	4.29E+11	5.04E+11	4.61E+11	4.54E+11	5.21E+11	4.49E+11	4.45E+11	4.97E+11	6.11E+11
Co-60	Y	1.07E+13	1.08E+12	5.10E+11	9.80E+11	7.73E+11	1.25E+12	8.25E+11	7.34E+11	8.63E+11	2.25E+12
Ni-59	D	1.06E+10	1.02E+10	1.14E+10	1.06E+10	1.02E+10	1.02E+10	1.05E+10	1.04E+10	1.11E+10	1.06E+10
Ni-59	W	3.55E+10	3.14E+09	6.63E+09	7.40E+09	3.08E+09	3.08E+09	3.14E+09	3.12E+09	3.38E+09	7.40E+09
Ni-63	D	2.58E+10	2.44E+10	2.82E+10	2.48E+10	2.44E+10	2.43E+10	2.43E+10	2.43E+10	2.43E+10	2.48E+10
Ni-63	W	9.12E+10	7.61E+09	1.99E+10	1.84E+10	7.34E+09	7.31E+09	7.31E+09	7.31E+09	7.31E+09	1.84E+10
Zn-65	D	1.68E+11	1.59E+11	1.78E+11	1.90E+11	2.22E+11	2.18E+11	2.28E+11	2.21E+11	1.92E+11	2.28E+11
Zn-65	W	2.76E+11	1.42E+11	1.50E+11	1.62E+11	1.78E+11	1.83E+11	1.83E+11	1.78E+11	1.67E+11	2.03E+11
Zn-65	Y	6.85E+11	1.72E+11	1.34E+11	1.77E+11	1.76E+11	2.11E+11	1.85E+11	1.76E+11	1.80E+11	2.60E+11
Se-75	D	9.42E+10	9.61E+10	8.54E+10	1.19E+11	2.10E+11	1.77E+11	9.90E+10	1.13E+11	9.59E+10	1.14E+11
Se-75	W	2.15E+11	9.67E+10	8.24E+10	1.36E+11	1.85E+11	1.64E+11	9.78E+10	1.12E+11	9.55E+10	1.24E+11
Rb-86	D	7.35E+10	1.70E+10	2.11E+10	6.63E+10	1.01E+11	1.00E+11	1.00E+11	1.01E+11	1.03E+11	9.96E+10
Sr-85	D	8.29E+10	7.32E+10	7.91E+10	9.08E+10	7.84E+10	7.45E+10	9.80E+10	1.11E+11	9.66E+10	8.68E+10
Sr-85	Y	2.81E+11	8.31E+10	8.89E+10	1.26E+11	7.84E+10	8.74E+10	8.46E+10	9.13E+10	9.72E+10	1.12E+11
Sr-89	D	5.24E+10	3.18E+09	1.10E+11	3.11E+10	1.75E+10	1.75E+10	1.06E+11	2.19E+11	1.75E+10	4.59E+10
Sr-89	Y	2.48E+12	9.78E+09	4.21E+11	3.81E+10	3.66E+08	3.67E+08	2.13E+09	4.37E+09	3.71E+08	3.44E+11
Sr-90	D	7.91E+10	1.58E+09	1.13E+11	1.92E+12	1.17E+11	1.17E+11	8.80E+12	1.76E+13	1.17E+11	1.68E+12
Sr-90	Y	6.80E+13	2.29E+11	7.12E+12	1.20E+12	2.92E+10	1.52E+11	9.60E+11	1.84E+12	2.92E+10	1.16E+13
Zr-95	W	6.56E+11	1.32E+11	2.21E+11	1.53E+11	1.29E+11	1.38E+11	1.53E+11	1.84E+11	1.60E+11	2.23E+11
Zr-95	Y	1.15E+12	1.46E+11	2.25E+11	1.60E+11	1.30E+11	1.53E+11	1.41E+11	1.47E+11	1.64E+11	2.85E+11
Nb-94	W	1.45E+12	3.01E+11	4.37E+11	5.15E+11	4.13E+11	3.09E+11	4.05E+11	5.05E+11	3.45E+11	5.15E+11
Nb-94	Y	2.24E+13	1.14E+12	4.71E+11	3.54E+12	7.76E+11	1.36E+12	8.85E+11	8.19E+11	9.24E+11	3.54E+12
Nb-95	Y	3.51E+11	1.15E+11	1.51E+11	1.26E+11	1.12E+11	1.17E+11	1.18E+11	1.24E+11	1.41E+11	1.59E+11
Mo-99	D	5.33E+10	2.30E+10	2.30E+10	2.88E+10	8.77E+10	1.32E+11	2.68E+10	3.36E+10	2.96E+10	4.09E+10
Mo-99	Y	1.72E+11	2.65E+10	1.83E+11	2.63E+10	2.39E+10	2.53E+10	2.25E+10	2.54E+10	2.81E+10	5.76E+10
Tc-99	D	7.70E+09	3.92E+09	4.07E+09	1.35E+09	2.78E+09	3.82E+09	1.95E+09	2.49E+09	8.56E+10	5.66E+09
Tc-99	W	4.18E+11	4.56E+09	1.33E+10	7.10E+09	2.46E+09	3.37E+09	1.72E+09	2.20E+09	7.57E+10	5.80E+10
Tc-99m	D	1.87E+10	1.63E+10	1.59E+10	1.98E+10	1.66E+10	1.65E+10	1.65E+10	2.82E+10	2.59E+10	1.99E+10
Tc-99m	W	1.95E+10	1.63E+10	1.59E+10	1.98E+10	1.66E+10	1.65E+10	1.65E+10	2.82E+10	2.53E+10	2.00E+10
Ru-103	Y	5.33E+11	7.50E+10	1.54E+11	8.63E+10	7.19E+10	7.68E+10	7.69E+10	8.45E+10	8.94E+10	1.46E+11
Ru-106	Y	3.04E+13	8.13E+10	1.15E+12	5.24E+11	9.87E+10	1.18E+11	1.03E+11	1.12E+11	1.08E+11	4.21E+12
Ag-108	D	3.98E+11	3.45E+11	2.83E+11	4.77E+11	4.59E+11	2.13E+12	3.16E+11	3.22E+11	3.14E+11	4.77E+11
Ag-108	W	1.03E+12	3.03E+11	3.29E+11	4.39E+11	3.19E+11	8.52E+11	2.91E+11	3.03E+11	3.21E+11	4.39E+11
Ag-108	Y	1.37E+13	1.12E+12	3.75E+11	2.50E+12	7.45E+11	1.66E+12	8.58E+11	7.51E+11	8.73E+11	2.50E+12
Ag-110	D	6.03E+11	5.28E+11	4.45E+11	7.02E+11	6.87E+11	2.74E+12	4.86E+11	4.89E+11	5.04E+11	7.02E+11
Ag-110	W	1.30E+12	4.70E+11	5.05E+11	6.32E+11	4.92E+11	1.10E+12	4.53E+11	4.62E+11	5.13E+11	6.32E+11
Ag-110	Y	3.91E+12	6.47E+11	5.05E+11	1.03E+12	5.41E+11	8.69E+11	5.66E+11	5.52E+11	6.42E+11	1.03E+12
Cd-109	D	9.96E+10	8.59E+10	9.95E+10	1.29E+12	1.17E+13	2.11E+12	1.03E+11	9.35E+10	7.96E+10	9.13E+11
Cd-109	W	4.32E+11	2.70E+10	8.75E+10	4.17E+11	3.38E+12	6.09E+10	3.03E+10	2.82E+10	2.35E+10	3.18E+11
Cd-109	Y	2.31E+12	1.26E+10	7.43E+10	5.13E+11	9.93E+11	1.88E+10	1.34E+10	1.24E+10	8.00E+09	3.62E+11
Sn-113	D	6.44E+10	4.77E+10	8.46E+10	7.20E+10	5.09E+10	4.77E+10	1.11E+11	1.94E+11	6.12E+10	7.20E+10
Sn-113	W	5.81E+11	4.57E+10	1.48E+11	1.26E+11	4.26E+10	4.51E+10	5.98E+10	8.39E+10	5.29E+10	1.26E+11
Sn-126	D	1.07E+12	9.08E+11	1.17E+12	1.33E+12	1.01E+12	9.33E+11	2.27E+12	4.17E+12	1.13E+12	1.33E+12
Sn-126	W	5.06E+12	7.25E+11	1.31E+12	1.43E+12	7.32E+11	7.35E+11	1.10E+12	1.66E+12	8.90E+11	1.43E+12
Sb-124	D	2.96E+11	2.42E+11	3.33E+11	2.96E+11	2.57E+11	2.97E+11	2.86E+11	3.60E+11	3.09E+11	2.96E+11
Sb-124	W	1.46E+12	2.64E+11	5.39E+11	4.53E+11	2.58E+11	2.75E+11	2.73E+11	2.96E+11	3.12E+11	4.53E+11
Sb-125	D	7.77E+10	6.30E+10	8.66E+10	8.23E+10	6.77E+10	8.59E+10	7.82E+10	1.51E+11	8.22E+10	8.23E+10
Sb-125	W	7.01E+11	7.25E+10	1.52E+11	1.63E+11	6.86E+10	7.99E+10	7.49E+10	9.94E+10	8.50E+10	1.63E+11
I-125	D	2.34E+10	1.48E+10	1.29E+10	3.24E+11	3.46E+10	1.50E+10	8.60E+09	3.57E+10	6.43E+12	2.23E+11
I-129	D	2.58E+10	1.46E+10	1.26E+10	5.34E+10	3.59E+10	1.91E+10	1.22E+10	3.86E+10	4.00E+13	1.24E+12
I-131	D	6.71E+11	5.96E+11	5.83E+11	7.19E+11	6.41E+11	6.06E+11	6.63E+11	8.16E+11	9.63E+12	9.89E+11
Cs-134	D	4.80E+11	4.54E+11	4.87E+11	5.87E+11	7.47E+11	7.55E+11	7.06E+11	7.07E+11	6.78E+11	7.47E+11
Cs-135	D	5.12E+09	3.06E+08	6.81E+08	3.52E+10	5.98E+10	5.98E+10	5.98E+10	6.90E+10	5.98E+10	5.35E+10
Cs-136	D	3.41E+11	3.03E+11	3.03E+11	3.52E+11	3.50E+11	3.40E+11	3.50E+11	3.77E+11	4.12E+11	3.71E+11

TABLE D-18 . PDCF-2 (Continued)

Nuclide and Solubility	Lung	Stomach Wall	LLI Wall	Total Body	Kidneys	Liver	Red Marrow	Bone	Thyroid	ICRP
Cs-137 D	2.11E+11	1.86E+11	2.01E+11	1.13E+11	4.90E+11	4.94E+11	4.75E+11	5.16E+11	4.59E+11	4.73E+11
Ba-140 D	1.04E+11	3.27E+10	1.65E+11	4.43E+10	3.67E+10	3.51E+10	5.48E+10	7.27E+10	4.81E+10	6.70E+10
La-140 W	4.47E+11	2.80E+11	4.32E+11	3.13E+11	2.99E+11	2.91E+11	2.98E+11	3.16E+11	3.55E+11	3.49E+11
Ce-141 Y	5.15E+11	1.42E+10	1.32E+11	2.09E+10	1.23E+10	1.64E+10	1.19E+10	1.89E+10	1.55E+10	8.58E+10
Ce-141 W	3.51E+11	1.41E+10	1.24E+11	2.26E+10	3.57E+10	9.68E+10	1.70E+10	3.51E+10	1.58E+10	7.28E+10
Ce-141 D	3.08E+10	1.39E+10	5.13E+10	3.79E+10	1.46E+11	4.74E+11	4.21E+10	1.12E+11	1.82E+10	6.40E+10
Ce-144 Y	2.32E+13	4.38E+10	1.05E+12	3.83E+11	1.97E+11	6.57E+11	7.81E+10	1.28E+11	1.67E+10	3.18E+12
Ce-144 W	5.45E+12	3.58E+10	9.66E+11	4.17E+11	1.85E+12	6.49E+12	6.70E+11	1.13E+12	4.58E+10	1.41E+12
Ce-144 D	1.46E+11	3.06E+10	3.27E+11	1.37E+12	8.01E+12	2.72E+13	1.21E+12	4.89E+12	1.61E+11	2.77E+12
Eu-152 W	1.85E+12	7.24E+11	5.77E+11	1.93E+12	1.24E+12	1.04E+13	2.49E+12	7.27E+12	4.31E+11	1.93E+12
Eu-154 W	2.50E+12	6.81E+11	1.46E+11	2.46E+12	1.16E+12	1.28E+13	3.30E+12	1.57E+13	4.14E+11	2.46E+12
Yb-169 W	3.18E+11	4.48E+10	1.29E+11	1.24E+11	4.84E+10	5.01E+10	6.29E+10	2.85E+11	6.28E+10	9.97E+10
Yb-169 Y	4.53E+11	4.66E+10	1.34E+11	1.37E+11	4.45E+10	4.76E+10	4.43E+10	8.57E+10	6.29E+10	1.08E+11
Pb-210 W	4.96E+13	9.77E+09	3.76E+11	2.80E+13	2.64E+13	2.48E+13	1.76E+13	1.60E+14	5.36E+12	2.08E+13
Po-210 W	3.68E+14	1.78E+10	7.03E+11	1.04E+13	1.12E+14	2.00E+13	6.64E+12	2.96E+12	6.40E+12	7.01E+13
Po-210 D	8.00E+12	5.78E+09	2.28E+11	1.68E+13	3.68E+14	6.40E+13	2.16E+13	9.60E+12	2.08E+13	7.96E+13
Rn-222 *	5.96E+11	5.33E+11	5.27E+11	6.13E+11	5.73E+11	5.44E+11	5.84E+11	6.37E+11	7.13E+11	6.15E+11
Ra-226 W	4.49E+14	5.63E+11	1.97E+12	3.82E+13	5.85E+12	5.82E+12	2.06E+13	1.85E+14	5.99E+12	6.87E+13
Ra-228 W	3.85E+13	1.89E+11	6.70E+11	2.01E+13	4.44E+12	6.11E+12	1.37E+13	1.12E+14	4.47E+12	1.45E+13
Ac-227 Y	8.24E+15	6.40E+11	1.45E+13	8.08E+14	7.28E+14	5.55E+15	3.60E+15	3.58E+16	5.21E+13	4.16E+15
Ac-227 W	6.72E+14	3.39E+11	1.81E+12	1.30E+15	1.97E+15	1.53E+16	9.76E+15	9.76E+16	1.12E+14	5.45E+15
Th-228 Y	5.73E+15	1.17E+12	2.36E+13	1.52E+14	1.09E+13	2.04E+13	2.96E+14	3.21E+15	7.43E+12	1.07E+15
Th-228 W	9.36E+14	6.04E+11	6.10E+12	1.76E+14	1.97E+13	9.64E+13	1.70E+15	1.85E+16	2.05E+13	9.04E+14
Th-229 Y	9.84E+15	1.48E+12	1.15E+13	8.56E+14	3.79E+13	1.20E+14	5.27E+15	6.26E+16	3.40E+13	5.08E+15
Th-229 W	9.28E+14	9.43E+11	3.39E+12	1.14E+15	3.55E+13	1.76E+14	1.27E+16	1.52E+17	3.48E+13	6.25E+15
Th-230 Y	4.21E+15	2.14E+10	8.00E+11	3.04E+14	8.80E+12	4.40E+13	2.03E+15	3.18E+16	8.80E+12	2.07E+15
Th-230 W	4.32E+14	2.20E+10	7.48E+11	4.48E+14	2.08E+13	1.04E+14	4.98E+15	7.82E+16	2.24E+13	3.02E+15
Th-232 Y	3.63E+15	6.11E+10	8.80E+11	3.04E+14	8.80E+12	3.92E+13	2.17E+15	3.62E+16	8.80E+12	2.13E+15
Th-232 W	3.76E+14	7.00E+10	7.38E+11	4.72E+14	1.84E+13	8.80E+13	5.22E+15	8.80E+16	1.92E+13	3.33E+15
Pa-231 Y	4.75E+15	2.04E+11	1.36E+12	1.10E+15	1.54E+15	1.19E+16	6.46E+15	7.49E+16	9.60E+13	5.27E+15
Pa-231 W	4.64E+14	3.17E+11	1.04E+12	2.09E+15	3.53E+15	2.74E+16	1.47E+16	1.73E+17	2.08E+14	9.28E+15
U-232 Y	7.10E+15	4.46E+11	8.80E+12	4.24E+14	4.64E+13	3.60E+13	7.04E+14	7.63E+15	1.44E+13	2.59E+15
U-232 W	5.36E+14	6.84E+10	1.04E+12	6.08E+13	7.76E+13	2.96E+12	4.56E+14	5.03E+15	1.52E+12	2.80E+14
U-232 D	8.80E+12	1.49E+11	4.10E+11	1.60E+14	2.56E+14	2.32E+12	1.38E+15	1.53E+16	2.40E+12	6.42E+14
U-233 Y	4.34E+15	3.09E+10	8.80E+11	1.36E+14	1.36E+13	1.24E+11	1.92E+12	2.88E+13	1.31E+11	8.96E+14
U-233 W	4.48E+14	4.96E+10	7.54E+11	2.08E+13	4.00E+13	3.55E+11	5.60E+12	8.00E+13	3.75E+11	6.24E+13
U-233 D	7.60E+12	1.14E+11	3.30E+11	4.56E+13	1.36E+14	1.20E+12	1.84E+13	2.80E+14	1.28E+12	2.03E+13
U-234 Y	4.29E+15	3.07E+10	8.80E+11	1.28E+14	1.36E+13	1.30E+11	1.92E+12	2.80E+13	1.29E+11	8.88E+14
U-234 W	4.40E+14	4.92E+10	7.53E+11	2.00E+13	3.92E+13	3.71E+11	5.44E+12	8.00E+13	3.70E+11	6.17E+13
U-234 D	7.52E+12	1.12E+11	3.28E+11	4.48E+13	1.28E+14	1.20E+12	1.84E+13	2.72E+14	1.20E+12	2.00E+13
U-235 Y	3.87E+15	2.19E+11	2.02E+12	1.20E+14	1.20E+13	2.73E+11	1.54E+12	2.32E+13	1.96E+11	7.98E+14
U-235 W	4.00E+14	8.30E+10	9.00E+11	1.84E+13	3.52E+13	3.50E+11	4.26E+12	6.80E+13	3.73E+11	5.55E+13
U-235 D	6.82E+12	1.34E+11	3.69E+11	4.08E+13	1.20E+14	1.06E+12	1.44E+13	2.24E+14	1.15E+12	1.72E+13
U-236 Y	4.05E+15	3.07E+10	8.00E+11	1.28E+14	1.28E+13	1.24E+11	1.60E+12	2.56E+13	1.22E+11	8.32E+14
U-236 W	4.16E+14	5.18E+10	7.14E+11	1.92E+13	3.68E+13	3.54E+11	4.72E+12	7.36E+13	3.50E+11	5.81E+13
U-236 D	7.12E+12	1.24E+11	3.26E+11	4.24E+13	1.20E+14	1.20E+12	1.60E+13	2.48E+14	1.12E+12	1.84E+13
U-238 Y	3.84E+15	3.13E+11	2.48E+12	1.20E+14	1.23E+13	3.85E+11	1.86E+12	2.35E+13	4.58E+11	7.89E+14
U-238 W	3.92E+14	2.91E+11	1.12E+12	1.87E+13	3.55E+13	5.66E+11	4.74E+12	6.67E+13	6.63E+11	5.48E+13
U-238 D	6.90E+12	3.42E+11	5.42E+11	4.03E+13	1.20E+14	1.28E+12	1.55E+13	2.24E+14	1.45E+12	1.73E+13
Np-237 Y	4.55E+15	4.09E+11	1.47E+12	5.28E+14	8.16E+14	6.31E+15	2.40E+15	3.39E+16	4.64E+13	2.77E+15
Np-237 W	4.72E+14	6.64E+11	1.31E+12	9.76E+14	2.01E+15	1.55E+16	5.94E+15	8.40E+16	1.12E+14	4.58E+15
Pu-236 Y	3.56E+15	2.76E+10	1.04E+12	9.60E+13	5.28E+13	4.00E+14	1.44E+14	1.67E+15	2.72E+12	6.36E+14
Pu-236 W	5.12E+14	2.32E+10	8.80E+11	1.20E+14	2.56E+14	1.98E+15	6.48E+14	7.54E+15	1.20E+13	5.27E+14
Pu-238 Y	4.86E+15	2.32E+10	9.60E+11	4.80E+14	7.20E+14	5.60E+15	2.09E+15	2.62E+16	4.08E+13	2.46E+15
Pu-238 W	5.12E+14	2.22E+10	8.80E+11	8.88E+14	1.84E+15	1.43E+16	5.37E+15	6.72E+16	1.04E+14	3.91E+15
Pu-239 Y	4.64E+15	2.18E+10	8.80E+11	5.36E+14	8.24E+14	6.38E+15	2.42E+15	3.33E+16	4.64E+13	2.78E+15
Pu-239 W	4.80E+14	2.07E+10	8.00E+11	9.92E+14	2.04E+15	1.58E+16	6.05E+15	8.32E+16	1.20E+14	4.60E+15
Pu-240 Y	4.63E+15	2.19E+10	8.80E+11	5.36E+14	8.24E+14	6.36E+15	2.42E+15	3.32E+16	4.64E+13	2.77E+15
Pu-240 W	4.80E+14	2.10E+10	8.00E+11	5.36E+14	2.04E+15	1.58E+16	6.04E+15	8.32E+16	1.20E+14	4.59E+15
Pu-241 Y	8.80E+12	8.24E+08	5.50E+09	9.60E+12	1.76E+13	1.36E+14	5.44E+13	6.80E+14	1.28E+12	4.30E+13
Pu-241 W	1.23E+11	1.45E+09	4.98E+09	2.00E+13	3.92E+13	3.04E+14	1.28E+14	1.55E+15	2.40E+12	8.72E+13
Pu-242 Y	4.40E+15	2.20E+10	8.80E+11	5.04E+14	7.84E+14	6.06E+15	2.30E+15	3.35E+16	4.48E+13	2.69E+15
Pu-242 W	4.56E+14	2.17E+10	7.79E+11	9.44E+14	1.94E+15	1.50E+16	5.74E+15	8.40E+16	1.12E+14	4.51E+15
Pu-244 Y	4.38E+15	1.16E+12	5.24E+12	5.04E+14	7.76E+14	5.99E+15	2.17E+15	3.39E+16	4.41E+13	2.67E+15
Pu-244 W	4.48E+14	1.32E+12	2.44E+12	9.36E+14	1.92E+15	1.49E+16	5.41E+15	8.48E+16	1.12E+14	4.49E+15
Am-241 Y	4.92E+15	7.28E+10	1.04E+12	5.52E+14	8.48E+14	6.59E+15	2.50E+15	3.12E+16	4.80E+13	2.78E+15
Am-241 W	5.12E+14	9.68E+10	8.82E+11	1.02E+15	2.10E+15	1.63E+16	6.22E+15	7.78E+16	1.20E+14	4.50E+15
Am-243 Y	4.76E+15	5.04E+11	2.99E+12	5.52E+14	8.56E+14	6.58E+15	2.50E+15	3.34E+16	4.88E+13	2.82E+15
Am-243 W	4.88E+14	7.05E+11	1.55E+12	1.02E+15	2.10E+15	1.62E+16	6.22E+15	8.24E+16	1.20E+14	4.63E+15
Cm-242 Y	1.38E+15	2.16E+10	9.60E+11	2.40E+13	6.00E+12	4.64E+13	1.60E+13	1.84E+14	3.96E+11	1.86E+14
Cm-242 W	4.40E+14	2.30E+10	8.80E+11	2.80E+13	4.96E+13	3.84E+14	1.20E+14	1.34E+15	2.40E+12	1.41E+14
Cm-243 Y	5.02E+15	1.90E+11	1.22E+12	3.84E+14	5.44E+14	4.21E+15	1.52E+15	1.72E+16	2.96E+13	1.97E+15
Cm-243 W	5.44E+14	2.68E+11	1.14E+12	6.96E+14	1.46E+15	1.13E+16	4.10E+15	4.62E+16	8.00E+13	2.88E+15
Cm-244 Y	4.86E+15	2.42E+10	1.04E+12	3.12E+14	4.16E+14	3.18E+15	1.13E+15	1.30E+16	2.16E+13	1.64E+15
Cm-244 W	5.36E+14	2.34E+10	8.80E+11	5.44E+14	1.16E+15	8.96E+15	3.19E+15	3.65E+16	6.16E+13	2.28E+15
Cm-248 Y	1.78E+16	2.72E+13	1.44E+13	2.08E+15	3.21E+15	2.47E+16	2.38E+15	3.42E+16	1.92E+14	7.02E+15
Cm-248 W	1.86E+15	4.00E+13	2.56E+13	3.86E+15	7.89E+15	6.08E+16	5.89E+15	8.48E+16	4.64E+14	8.56E+15
Cf-252 Y	6.97E+15	2.56E+12	2.72E+12	1.68E+14	9.60E+13	7.52E+14	1.20E+14	1.30E+15	5.44E+12	1.10E+15
Cf-252 W	1.04E+15	2.08E+12	3.20E+12	2.32E+14	4.88E+14	3.78E+15	6.16E+14	6.58E+15	2.40E+13	7.07E+14

000433

TABLE D-19 . PDCF-3: PDCF for Chronic Airborne Pathways Including Food/Air Pathway

6400

Nuclide and Solubility		Lung	Stomach Wall	LLI Wall	Total Body	Kidneys	Liver	Red Marrow	Bone	Thyroid	ICRP
H-3	*	5.96E+10	7.67E+10	1.01E+11	5.92E+10	6.10E+10	5.90E+10	5.89E+10	4.68E+10	5.90E+10	6.39E+10
C-14	*	8.65E+11	1.23E+12	1.49E+12	1.96E+12	1.08E+12	1.25E+12	3.44E+12	7.18E+12	9.05E+11	1.57E+12
Na-22	D	8.37E+12	3.98E+12	4.85E+12	5.06E+12	5.34E+12	5.03E+12	6.69E+12	8.36E+12	4.84E+12	6.43E+12
P-32	D	1.78E+12	1.27E+12	1.04E+13	2.02E+12	1.72E+12	1.73E+12	6.35E+12	1.16E+13	1.73E+12	3.22E+12
P-32	W	2.51E+12	1.28E+12	1.05E+13	2.02E+12	1.71E+12	1.72E+12	6.33E+12	1.15E+13	1.72E+12	3.30E+12
P-33	D	1.56E+11	2.87E+11	1.33E+12	4.76E+11	1.49E+11	1.49E+11	7.94E+11	2.09E+12	1.49E+11	3.94E+11
P-33	W	2.72E+11	2.87E+11	1.34E+12	4.96E+11	1.48E+11	1.48E+11	7.91E+11	2.09E+12	1.48E+11	4.07E+11
S-35	D	1.29E+11	2.17E+11	9.25E+11	1.98E+11	1.25E+11	1.25E+11	1.72E+09	1.25E+11	1.25E+11	1.98E+11
S-35	W	2.73E+11	2.17E+11	9.29E+11	2.23E+11	1.24E+11	1.24E+11	1.38E+09	1.24E+11	1.24E+11	2.15E+11
Cl-36	D	4.44E+12	6.12E+12	4.41E+12	4.56E+12	4.41E+12	4.41E+12	4.41E+12	4.41E+12	4.41E+12	4.52E+12
Cl-36	W	5.75E+12	6.12E+12	4.41E+12	4.79E+12	4.41E+12	4.41E+12	4.41E+12	4.41E+12	4.41E+12	4.68E+12
Ca-45	W	3.05E+11	5.24E+10	1.02E+12	4.80E+11	2.00E+10	3.19E+10	1.29E+12	1.96E+12	2.00E+10	3.51E+11
Sc-46	Y	2.43E+12	1.31E+12	4.78E+12	1.97E+12	1.19E+12	1.17E+12	1.26E+12	1.23E+12	1.38E+12	1.92E+12
Cr-51	D	2.02E+10	2.27E+10	9.83E+10	3.20E+10	2.03E+10	1.92E+10	2.30E+10	2.58E+10	2.41E+10	3.14E+10
Cr-51	W	3.01E+10	2.27E+10	9.98E+10	3.38E+10	2.00E+10	1.92E+10	2.28E+10	2.55E+10	2.39E+10	3.22E+10
Cr-51	Y	3.49E+10	2.27E+10	1.00E+11	3.46E+10	2.00E+10	1.93E+10	2.28E+10	2.54E+10	2.39E+10	3.26E+10
Mn-54	D	6.66E+11	5.56E+11	1.06E+12	6.11E+11	6.02E+11	8.46E+11	6.44E+11	6.51E+11	6.24E+11	7.62E+11
Mn-54	W	8.31E+11	5.65E+11	1.07E+12	6.07E+11	5.86E+11	7.83E+11	6.29E+11	6.31E+11	6.27E+11	7.74E+11
Fe-55	W	9.72E+10	1.94E+09	7.43E+10	4.04E+10	7.37E+10	1.40E+11	7.33E+10	5.00E+10	7.23E+10	9.12E+10
Fe-55	Y	2.72E+11	1.96E+09	7.45E+10	4.03E+10	6.90E+10	1.31E+11	6.87E+10	4.68E+10	6.77E+10	1.10E+11
Fe-59	W	1.62E+12	9.25E+11	3.71E+12	9.73E+11	1.05E+12	1.21E+12	1.02E+12	9.91E+11	1.03E+12	1.50E+12
Fe-59	Y	1.87E+12	9.25E+11	3.71E+12	9.68E+11	1.03E+12	1.19E+12	1.00E+12	9.77E+11	1.02E+12	1.52E+12
Co-57	W	2.16E+11	9.36E+10	4.87E+11	9.99E+10	8.77E+10	9.51E+10	1.01E+11	1.34E+11	1.11E+11	1.69E+11
Co-57	Y	5.90E+11	1.04E+11	4.87E+11	1.12E+11	9.06E+10	1.07E+11	1.10E+11	1.42E+11	1.15E+11	2.23E+11
Co-58	W	8.59E+11	6.35E+11	1.83E+12	6.52E+11	6.06E+11	5.96E+11	6.43E+11	6.44E+11	6.98E+11	8.94E+11
Co-58	Y	1.10E+12	6.50E+11	1.83E+12	6.64E+11	6.12E+11	6.13E+11	6.52E+11	6.51E+11	7.08E+11	9.32E+11
Co-60	W	3.04E+12	1.76E+12	4.95E+12	1.83E+12	1.88E+12	2.00E+12	1.86E+12	1.79E+12	1.68E+12	2.60E+12
Co-60	Y	1.24E+13	2.41E+12	4.95E+12	2.35E+12	2.20E+12	2.73E+12	2.24E+12	2.08E+12	2.04E+12	4.24E+12
Ni-59	D	2.04E+10	2.16E+10	8.62E+10	2.65E+10	2.01E+10	2.01E+10	2.06E+10	2.05E+10	2.19E+10	2.65E+10
Ni-59	W	4.53E+10	1.45E+10	8.15E+10	2.33E+10	1.30E+10	1.30E+10	1.33E+10	1.32E+10	1.42E+10	2.33E+10
Ni-63	D	4.95E+10	5.36E+10	2.83E+11	6.80E+10	4.80E+10	4.79E+10	4.79E+10	4.79E+10	4.79E+10	6.80E+10
Ni-63	W	1.15E+11	3.68E+10	2.75E+11	6.16E+10	3.10E+10	3.09E+10	3.09E+10	3.09E+10	3.09E+10	6.16E+10
Zn-65	D	9.63E+12	3.78E+12	5.29E+12	4.52E+12	5.94E+12	5.86E+12	6.08E+12	5.60E+12	4.11E+12	6.74E+12
Zn-65	W	9.73E+12	3.76E+12	5.26E+12	4.49E+12	5.89E+12	5.82E+12	6.03E+12	5.56E+12	4.09E+12	6.71E+12
Zn-65	Y	1.01E+13	3.79E+12	5.25E+12	4.51E+12	5.89E+12	5.85E+12	6.03E+12	5.18E+13	4.10E+12	6.77E+12
Se-75	D	1.73E+12	2.18E+12	1.98E+12	2.74E+12	6.72E+12	5.41E+12	2.10E+12	1.85E+12	1.31E+12	2.59E+12
Se-75	W	1.85E+12	2.18E+12	1.98E+12	2.76E+12	6.70E+12	5.40E+12	2.10E+12	1.85E+12	1.31E+12	2.60E+12
Rb-86	D	2.29E+12	4.63E+11	8.63E+11	1.36E+12	2.25E+12	2.25E+12	2.24E+12	2.23E+12	2.24E+12	2.28E+12
Sr-85	D	3.51E+11	3.54E+11	6.96E+11	4.61E+11	3.56E+11	3.32E+11	4.84E+11	5.30E+11	4.16E+11	4.56E+11
Sr-85	Y	4.96E+11	3.26E+11	7.97E+11	4.47E+11	3.05E+11	2.99E+11	3.36E+11	3.53E+11	3.60E+11	4.43E+11
Sr-89	D	1.19E+11	1.96E+11	6.82E+12	1.70E+11	8.37E+10	8.37E+10	5.11E+11	1.05E+12	8.37E+10	7.32E+11
Sr-89	Y	2.48E+12	2.03E+11	8.93E+12	7.58E+10	3.73E+09	3.73E+09	2.24E+10	4.61E+10	3.74E+09	1.05E+12
Sr-90	D	5.43E+11	6.94E+10	6.13E+12	9.23E+12	5.80E+11	5.59E+11	4.21E+13	8.41E+13	5.80E+11	8.45E+12
Sr-90	Y	6.80E+13	2.97E+11	1.45E+13	1.59E+12	5.24E+10	1.74E+11	2.62E+12	5.17E+12	5.24E+10	1.25E+13
Zr-95	W	1.03E+12	5.69E+11	3.49E+12	5.60E+11	4.93E+11	4.73E+11	5.53E+11	5.88E+11	5.75E+11	9.62E+11
Zr-95	Y	1.52E+12	5.84E+11	3.49E+12	5.66E+11	4.93E+11	4.87E+11	5.41E+11	5.51E+11	5.80E+11	1.02E+12
Nb-94	W	2.43E+12	2.43E+12	2.59E+13	5.04E+12	2.42E+12	1.47E+12	2.52E+12	2.74E+12	1.40E+12	5.04E+12
Nb-94	Y	2.34E+13	3.26E+12	2.59E+13	8.06E+12	2.79E+12	2.51E+12	3.00E+12	3.05E+12	1.98E+12	8.06E+12
Nb-95	Y	9.45E+11	9.57E+11	8.28E+12	7.30E+11	6.88E+11	5.80E+11	7.98E+11	6.44E+11	5.60E+11	1.88E+12
Mo-99	D	2.32E+11	2.67E+11	3.44E+11	2.06E+11	1.40E+12	2.30E+12	1.96E+11	2.78E+11	1.59E+11	4.05E+11
Mo-99	Y	2.52E+11	2.61E+11	4.87E+12	1.29E+11	1.59E+11	1.99E+11	1.10E+11	1.14E+11	1.22E+11	5.88E+11
Tc-99	D	7.76E+10	2.09E+11	7.09E+11	4.85E+10	1.04E+11	1.42E+11	7.29E+10	9.28E+10	3.19E+12	2.30E+11
Tc-99	W	4.87E+11	2.10E+11	7.19E+11	5.43E+10	1.03E+11	1.42E+11	7.27E+10	9.26E+10	3.18E+12	2.83E+11
Tc-99m	D	8.32E+10	9.38E+10	8.33E+10	8.30E+10	7.23E+10	7.24E+10	7.20E+10	1.17E+11	1.49E+11	9.25E+10
Tc-99m	W	8.39E+10	9.38E+10	8.33E+10	8.30E+10	7.22E+10	7.24E+10	7.20E+10	1.17E+11	1.49E+11	9.25E+10
Ru-103	Y	1.24E+12	1.01E+12	1.84E+13	6.96E+11	6.60E+11	6.13E+11	7.68E+11	6.15E+11	5.26E+11	2.69E+12
Ru-106	Y	3.69E+13	4.96E+12	1.96E+14	5.06E+12	6.36E+12	6.39E+12	6.41E+12	7.37E+12	6.25E+12	2.59E+13
Ag-108	D	1.34E+12	1.44E+12	4.45E+12	2.15E+12	1.60E+12	5.96E+12	1.30E+12	1.25E+12	1.21E+12	2.15E+12
Ag-108	W	1.97E+12	1.40E+12	4.50E+12	2.11E+12	1.46E+12	4.68E+12	1.28E+12	1.23E+12	1.22E+12	2.11E+12
Ag-108	Y	1.47E+13	2.22E+12	4.54E+12	4.17E+12	1.89E+12	5.49E+12	1.85E+12	1.68E+12	1.77E+12	4.17E+12
Ag-110	D	2.08E+12	2.24E+12	6.46E+12	3.22E+12	2.47E+12	7.77E+12	2.03E+12	1.92E+12	1.96E+12	3.22E+12
Ag-110	W	2.78E+12	2.18E+12	6.52E+12	3.15E+12	2.27E+12	6.13E+12	2.00E+12	1.90E+12	1.97E+12	3.15E+12
Ag-110	Y	5.40E+12	2.36E+12	6.52E+12	3.55E+12	2.32E+12	5.90E+12	2.11E+12	1.99E+12	2.10E+12	3.55E+12
Cd-109	D	2.10E+11	2.27E+11	1.69E+12	2.99E+12	2.58E+13	4.66E+12	2.31E+11	2.09E+11	1.77E+11	2.14E+12
Cd-109	W	5.43E+11	1.69E+11	1.68E+12	2.12E+12	1.75E+13	2.61E+12	1.58E+11	1.43E+11	1.21E+11	1.54E+12
Cd-109	Y	2.42E+12	1.54E+11	1.67E+12	2.21E+12	1.51E+13	2.56E+12	1.42E+11	1.28E+11	1.06E+11	1.59E+12
Sn-113	D	1.94E+11	2.58E+11	6.24E+12	8.30E+11	2.01E+11	1.82E+11	3.59E+11	5.10E+11	2.18E+11	8.30E+11
Sn-113	W	7.11E+11	2.56E+11	6.31E+12	8.84E+11	1.93E+11	1.80E+11	3.08E+11	3.99E+11	2.10E+11	8.84E+11
Sn-126	D	3.32E+12	3.79E+12	3.59E+13	7.28E+12	3.39E+12	3.13E+12	6.18E+12	1.01E+13	3.81E+12	7.28E+12
Sn-126	W	7.32E+12	3.61E+12	3.60E+13	7.38E+12	3.12E+12	2.93E+12	5.01E+12	7.58E+12	3.57E+12	7.38E+12
Sb-124	D	1.05E+12	1.20E+12	6.96E+12	1.80E+12	1.07E+12	1.15E+12	1.18E+12	1.36E+12	1.22E+12	1.80E+12
Sb-124	W	2.19E+12	1.19E+12	7.73E+12	1.98E+12	1.04E+12	1.01E+12	1.11E+12	1.13E+12	1.20E+12	1.98E+12
Sb-125	D	2.73E+11	3.10E+11	1.87E+12	4.94E+11	2.77E+11	3.21E+11	3.21E+11	5.30E+11	3.24E+11	4.94E+11
Sb-125	W	8.84E+11	3.08E+11	2.08E+12	5.73E+11	2.65E+11	2.63E+11	2.88E+11	3.38E+11	3.15E+11	5.73E+11
I-125	D	2.74E+11	3.73E+11	1.89E+11	7.01E+13	2.66E+11	1.96E+11	3.46E+11	4.49E+11	1.59E+15	4.83E+13
I-129	D	1.11E+12	1.57E+11	1.34E+11	4.13E+12	1.01E+12	9.70E+11	1.21E+12	1.24E+12	9.76E+15	2.93E+14
I-131	D	3.17E+12	2.60E+12	2.47E+12	4.08E+12	2.91E+12	2.80E+12	3.10E+12	3.78E+12	2.26E+15	7.12E+13
Cs-134	D	1.81E+13	6.34E+12	7.17E+12	8.53E+12	1.20E+13	1.20E+13	1.12E+13	1.08E+13	9.77E+12	1.33E+13
Cs-135	D	1.19E+12	2.58E+10	5.75E+10	7.37E+11	1.25E+12	1.25E+12	1.25E+12	1.45E+12	1.26E+12	1.25E+12
Cs-136	D	3.48E+12	1.99E+12	2.16E+12	2.23E+12	2.60E+12	2.59E+12	2.49E+12	2.49E+12	2.52E+12	2.79E+12

TABLE D-19 . PDCF-3 (Continued)

Nuclide and Solubility	Lung	Stomach Wall	LLI Wall	Total Body	Kidneys	Liver	Red Marrow	Bone	Thyroid	ICRP
Cs-137 D	1.11E+13	2.73E+12	3.17E+12	5.59E+12	8.94E+12	9.08E+12	8.56E+12	9.28E+12	7.91E+12	9.44E+12
Ba-140 D	2.44E+11	2.49E+11	7.09E+12	2.05E+11	1.54E+11	1.40E+11	2.26E+11	2.53E+11	1.74E+11	8.15E+11
La-140 W	1.37E+12	1.36E+12	5.74E+12	1.30E+12	1.22E+12	1.15E+12	1.24E+12	1.28E+12	1.42E+12	1.86E+12
Ce-141 Y	5.51E+11	1.01E+11	2.39E+12	6.86E+10	4.61E+10	4.84E+10	4.94E+10	7.19E+10	6.03E+10	3.24E+11
Ce-141 W	3.86E+11	1.00E+11	2.38E+12	7.03E+10	6.95E+10	1.29E+11	5.45E+10	8.81E+10	6.07E+10	3.11E+11
Ce-141 D	6.64E+10	1.00E+11	2.31E+12	8.56E+10	1.80E+11	5.06E+11	7.95E+10	1.65E+11	6.30E+10	3.02E+11
Ce-144 Y	2.32E+13	2.07E+11	4.07E+12	4.30E+11	2.28E+11	6.83E+11	1.07E+11	1.68E+11	4.78E+10	4.67E+12
Ce-144 W	5.47E+12	1.99E+11	3.99E+12	4.64E+11	1.88E+12	6.51E+12	6.99E+11	1.17E+12	7.69E+10	2.90E+12
Ce-144 D	1.71E+11	1.94E+11	3.35E+12	1.42E+12	8.04E+12	2.72E+13	1.24E+12	4.93E+12	1.92E+11	4.26E+12
Eu-152 W	2.36E+12	1.31E+12	3.81E+12	2.89E+12	1.82E+12	1.16E+13	3.19E+12	8.37E+12	1.02E+12	2.89E+12
Eu-154 W	3.05E+12	1.36E+12	5.67E+12	3.71E+12	1.76E+12	1.43E+13	4.11E+12	1.75E+13	1.04E+12	3.71E+12
Yb-169 W	4.46E+11	2.28E+11	2.20E+12	5.04E+11	1.87E+11	1.75E+11	2.09E+11	5.10E+11	2.47E+11	4.58E+11
Yb-169 Y	5.81E+11	2.30E+11	2.21E+12	5.16E+11	1.83E+11	1.72E+11	1.91E+11	3.11E+11	2.47E+11	4.67E+11
Pb-210 W	7.05E+13	2.39E+10	1.79E+12	1.47E+14	9.19E+13	1.22E+14	8.73E+13	8.29E+14	2.63E+13	7.50E+13
Po-210 W	4.07E+14	3.60E+11	1.43E+13	4.13E+13	8.14E+14	1.41E+14	4.74E+13	2.11E+13	4.56E+13	2.24E+14
Po-210 D	4.72E+13	3.48E+11	1.38E+13	4.77E+13	1.07E+15	1.85E+14	6.23E+13	2.77E+13	6.00E+13	2.34E+14
Rn-222 *	2.34E+12	2.14E+12	2.12E+12	2.46E+12	2.30E+12	2.18E+12	2.35E+12	2.56E+12	2.86E+12	2.46E+12
Ra-226 W	4.92E+14	2.55E+12	2.70E+13	2.82E+14	4.95E+13	4.94E+13	1.79E+14	1.61E+15	5.01E+13	1.69E+14
Ra-228 W	6.80E+13	6.93E+11	6.07E+12	1.41E+14	3.32E+13	3.49E+13	1.06E+14	8.09E+14	3.33E+13	7.10E+13
Ac-227 Y	8.26E+15	8.72E+11	1.88E+13	1.03E+15	1.07E+15	8.28E+15	5.30E+15	5.28E+16	7.11E+13	5.10E+15
Ac-227 W	6.91E+14	5.72E+11	6.20E+12	1.52E+15	2.31E+15	1.80E+16	1.15E+16	1.15E+17	1.31E+14	6.39E+15
Th-228 Y	5.73E+15	2.79E+12	5.71E+13	1.57E+14	1.28E+13	2.33E+13	3.24E+14	3.49E+15	9.59E+12	1.09E+15
Th-228 W	9.38E+14	2.22E+12	3.96E+13	1.81E+14	2.16E+13	9.93E+13	1.72E+15	1.88E+16	2.27E+13	9.20E+14
Th-229 Y	9.84E+15	2.64E+12	2.67E+13	8.73E+14	3.94E+13	1.24E+14	5.45E+15	6.48E+16	3.58E+13	5.17E+15
Th-229 W	9.30E+14	2.11E+12	1.86E+13	1.15E+15	3.70E+13	1.80E+14	1.29E+16	1.54E+17	3.66E+13	6.34E+15
Th-230 Y	4.21E+15	2.98E+11	1.32E+13	3.10E+14	9.10E+12	4.55E+13	2.10E+15	3.29E+16	9.11E+12	2.12E+15
Th-230 W	4.32E+14	2.99E+11	1.31E+13	4.54E+14	2.11E+13	1.06E+14	5.05E+15	7.93E+16	2.27E+13	3.07E+15
Th-232 Y	3.63E+15	2.99E+11	1.12E+13	3.11E+14	9.06E+12	4.05E+13	2.24E+15	3.75E+16	9.07E+12	2.18E+15
Th-232 W	3.76E+14	3.08E+11	1.10E+13	4.79E+14	1.87E+13	8.93E+13	5.30E+15	8.92E+16	1.95E+13	3.38E+15
Pa-231 Y	4.80E+15	1.18E+12	4.02E+13	1.53E+15	2.27E+15	1.76E+16	9.53E+15	1.11E+17	1.41E+14	7.22E+15
Pa-231 W	5.09E+14	1.29E+12	3.99E+13	2.52E+15	4.26E+15	3.32E+16	1.78E+16	2.09E+17	2.53E+14	1.12E+16
U-232 Y	7.10E+15	7.72E+11	2.28E+13	4.30E+14	5.55E+13	3.61E+13	7.54E+14	8.18E+15	1.45E+13	2.62E+15
U-232 W	5.38E+14	5.17E+11	1.50E+13	2.08E+14	3.08E+14	4.96E+12	1.71E+15	1.87E+16	3.63E+12	8.53E+14
U-232 D	1.11E+13	5.98E+11	1.44E+13	3.07E+14	4.87E+14	4.32E+12	2.63E+15	2.89E+16	4.51E+12	1.21E+15
U-233 Y	4.34E+15	3.23E+11	1.35E+13	1.38E+14	1.83E+13	1.66E+11	2.59E+12	3.86E+13	1.76E+11	8.98E+14
U-233 W	4.49E+14	4.35E+11	1.26E+13	6.14E+13	1.59E+14	1.41E+12	2.24E+13	3.25E+14	1.49E+12	8.07E+13
U-233 D	8.82E+12	4.99E+11	1.22E+13	8.62E+13	2.55E+14	2.26E+12	3.52E+13	5.25E+14	2.40E+12	3.86E+13
U-234 Y	4.29E+15	3.22E+11	1.35E+13	1.30E+14	1.83E+13	1.74E+11	2.57E+12	3.78E+13	1.73E+11	8.90E+14
U-234 W	4.41E+14	4.32E+11	1.26E+13	6.06E+13	1.58E+14	1.48E+12	2.15E+13	3.25E+14	1.48E+12	7.97E+13
U-234 D	8.72E+12	4.95E+11	1.22E+13	8.54E+13	2.47E+14	2.31E+12	3.45E+13	5.17E+14	2.31E+12	3.80E+13
U-235 Y	3.87E+15	5.64E+11	1.54E+13	1.22E+14	1.63E+13	3.78E+11	2.12E+12	3.17E+13	3.30E+11	7.99E+14
U-235 W	4.01E+14	5.20E+11	1.35E+13	5.49E+13	1.40E+14	1.38E+12	1.69E+13	2.71E+14	1.48E+12	7.12E+13
U-235 D	8.02E+12	5.71E+11	1.30E+13	7.73E+13	2.25E+14	2.09E+12	2.71E+13	4.27E+14	2.26E+12	3.30E+13
U-236 Y	4.05E+15	3.05E+11	1.27E+13	1.30E+14	1.72E+13	1.66E+11	2.16E+12	3.47E+13	1.63E+11	8.34E+14
U-236 W	4.17E+14	4.13E+11	1.19E+13	5.70E+13	1.49E+14	1.40E+12	1.87E+13	2.90E+14	1.39E+12	7.47E+13
U-236 D	8.25E+12	4.85E+11	1.15E+13	8.02E+13	2.32E+14	2.24E+12	3.00E+13	4.65E+14	2.16E+12	3.50E+13
U-238 Y	3.84E+15	1.30E+12	1.51E+13	1.23E+14	1.72E+13	1.16E+12	3.19E+12	3.21E+13	1.50E+12	7.92E+14
U-238 W	3.94E+14	1.36E+12	1.30E+13	5.52E+13	1.41E+14	2.24E+12	1.88E+13	2.63E+14	2.65E+12	7.10E+13
U-238 D	8.76E+12	1.41E+12	1.24E+13	7.68E+13	2.26E+14	2.96E+12	2.95E+13	4.21E+14	3.44E+12	3.35E+13
Np-237 Y	4.56E+15	8.79E+11	1.61E+13	6.01E+14	9.69E+14	7.47E+15	2.84E+15	4.02E+16	5.53E+13	3.11E+15
Np-237 W	4.81E+14	1.13E+12	1.59E+13	1.05E+15	2.16E+15	1.67E+16	6.39E+15	9.03E+16	1.21E+14	4.93E+15
Pu-236 Y	3.56E+15	3.68E+11	1.61E+13	9.63E+13	5.34E+13	4.04E+14	1.45E+14	1.69E+15	2.75E+12	6.38E+14
Pu-236 W	5.12E+14	3.64E+11	1.60E+13	1.20E+14	2.57E+14	1.98E+15	6.49E+14	7.55E+15	1.20E+13	5.30E+14
Pu-238 Y	4.86E+15	3.47E+11	1.54E+13	4.82E+14	7.24E+14	5.63E+15	2.10E+15	2.63E+16	4.10E+13	2.47E+15
Pu-238 W	5.12E+14	3.46E+11	1.53E+13	8.90E+14	1.84E+15	1.44E+16	5.38E+15	6.73E+16	1.04E+14	3.92E+15
Pu-239 Y	4.64E+15	3.25E+11	1.46E+13	5.38E+14	8.28E+14	6.41E+15	2.44E+15	3.35E+16	4.67E+13	2.79E+15
Pu-239 W	4.80E+14	3.24E+11	1.45E+13	9.94E+14	2.04E+15	1.59E+16	6.06E+15	8.34E+16	1.20E+14	4.61E+15
Pu-240 Y	4.63E+15	3.26E+11	1.46E+13	5.38E+14	8.28E+14	6.39E+15	2.43E+15	3.34E+16	4.67E+13	2.78E+15
Pu-240 W	4.80E+14	3.25E+11	1.45E+13	5.38E+14	2.04E+15	1.58E+16	6.05E+15	8.34E+16	1.20E+14	4.60E+15
Pu-241 Y	8.81E+12	2.36E+09	7.36E+10	9.64E+12	1.77E+13	1.37E+14	5.47E+13	6.83E+14	1.29E+12	4.32E+13
Pu-241 W	1.28E+11	2.98E+09	7.31E+10	2.00E+13	3.93E+13	3.05E+14	1.28E+14	1.56E+15	2.41E+12	8.74E+13
Pu-242 Y	4.40E+15	3.11E+11	1.39E+13	5.06E+14	7.88E+14	6.09E+15	2.31E+15	3.37E+16	4.50E+13	2.70E+15
Pu-242 W	4.56E+14	3.11E+11	1.38E+13	9.46E+14	1.94E+15	1.51E+16	5.76E+15	8.42E+16	1.12E+14	4.52E+15
Pu-244 Y	4.38E+15	1.60E+12	2.60E+13	5.06E+14	7.80E+14	6.02E+15	2.18E+15	3.41E+16	4.45E+13	2.68E+15
Pu-244 W	4.48E+14	1.76E+12	2.32E+13	9.38E+14	1.92E+15	1.49E+16	5.42E+15	8.50E+16	1.12E+14	4.50E+15
Am-241 Y	4.93E+15	4.44E+11	1.68E+13	6.27E+14	1.01E+15	7.87E+15	2.98E+15	3.72E+16	5.70E+13	3.13E+15
Am-241 W	5.21E+14	4.68E+11	1.66E+13	1.10E+15	2.27E+15	1.76E+16	6.70E+15	8.38E+16	1.29E+14	4.85E+15
Am-243 Y	4.77E+15	9.87E+11	1.96E+13	6.27E+14	1.02E+15	7.86E+15	2.98E+15	3.97E+16	5.87E+13	3.18E+15
Am-243 W	4.98E+14	1.19E+12	1.81E+13	1.10E+15	2.27E+15	1.75E+16	6.70E+15	8.88E+16	1.30E+14	4.99E+15
Cm-242 Y	1.38E+15	3.81E+11	1.67E+13	2.58E+13	9.92E+12	7.66E+13	2.56E+13	2.87E+14	5.83E+11	1.94E+14
Cm-242 W	4.40E+14	3.83E+11	1.66E+13	2.98E+13	5.35E+13	4.14E+14	1.30E+14	1.45E+15	2.59E+12	1.49E+14
Cm-243 Y	5.02E+15	6.44E+11	1.84E+13	4.33E+14	6.47E+14	5.03E+15	1.81E+15	2.05E+16	3.53E+13	2.17E+15
Cm-243 W	5.50E+14	7.21E+11	1.83E+13	7.45E+14	1.56E+15	1.21E+16	4.39E+15	4.95E+16	8.57E+13	3.08E+15
Cm-244 Y	4.86E+15	3.64E+11	1.61E+13	3.50E+14	4.98E+14	3.82E+15	1.35E+15	1.56E+16	2.60E+13	1.80E+15
Cm-244 W	5.40E+14	3.63E+11	1.60E+13	5.82E+14	1.24E+15	9.60E+15	3.42E+15	3.91E+16	6.60E+13	2.44E+15
Cm-248 Y	1.78E+16	3.25E+13	8.98E+13	2.35E+15	3.76E+15	2.90E+16	2.79E+15	4.03E+16	2.25E+14	7.62E+15
Cm-248 W	1.90E+15	4.53E+13	1.01E+14	4.13E+15	8.44E+15	6.51E+16	6.31E+15	9.08E+16	4.97E+14	9.16E+15
Cf-252 Y	6.97E+15	4.00E+12	4.18E+13	1.84E+14	1.32E+14	1.03E+15	1.65E+14	1.78E+15	7.16E+12	1.15E+15
Cf-252 W	1.04E+15	3.52E+12	4.22E+13	2.48E+14	5.24E+14	4.06E+15	6.61E+14	7.05E+15	2.57E+13	7.53E+14

000435

TABLE D-20 . PDCF-4: PDCF for Food/Soil Pathways

Nuclide and Solubility		Lung	Stomach Wall	LLI Wall	Total Body	Kidneys	Liver	Red Marrow	Bone	Thyroid	ICRP
H-3	•	8.12E+04	1.05E+05	1.39E+05	8.06E+04	8.31E+04	8.04E+04	8.02E+04	6.37E+04	8.04E+04	8.72E+04
C-14	•	1.22E+06	1.74E+06	2.10E+06	2.77E+06	1.53E+06	1.77E+06	4.87E+06	1.02E+07	1.28E+06	2.22E+06
Na-22	D	5.73E+04	2.32E+04	3.01E+04	3.03E+04	3.32E+04	3.12E+04	4.35E+04	5.58E+04	2.70E+04	4.15E+04
P-32	D	1.53E+06	1.13E+06	9.24E+06	1.77E+06	1.51E+06	1.52E+06	5.58E+06	1.02E+07	1.52E+06	2.83E+06
P-32	W	1.53E+06	1.13E+06	9.24E+06	1.77E+06	1.51E+06	1.52E+06	5.58E+06	1.02E+07	1.52E+06	2.83E+06
P-33	D	1.31E+05	2.54E+05	1.18E+06	4.18E+05	1.31E+05	1.31E+05	6.97E+05	1.84E+06	1.31E+05	3.46E+05
P-33	W	1.31E+05	2.54E+05	1.18E+06	4.18E+05	1.31E+05	1.31E+05	6.97E+05	1.84E+06	1.31E+05	3.46E+05
S-35	D	7.83E+04	1.37E+05	5.86E+05	1.24E+05	7.83E+04	7.83E+04	2.12E+01	7.83E+04	7.83E+04	1.24E+05
S-35	W	7.83E+04	1.37E+05	5.86E+05	1.24E+05	7.83E+04	7.83E+04	2.12E+01	7.83E+04	7.83E+04	1.24E+05
Cl-36	D	6.13E+06	8.52E+06	6.13E+06	6.34E+06	6.13E+06	6.13E+06	6.13E+06	6.13E+06	6.13E+06	6.28E+06
Cl-36	W	6.13E+06	8.52E+06	6.13E+06	6.34E+06	6.13E+06	6.13E+06	6.13E+06	6.13E+06	6.13E+06	6.28E+06
Ca-45	W	1.13E+03	3.02E+03	5.94E+04	2.44E+04	1.13E+03	1.13E+03	7.30E+04	1.11E+05	1.13E+03	1.80E+04
Sc-46	Y	3.29E+01	4.63E+02	7.04E+03	1.05E+03	1.92E+02	1.37E+02	2.73E+02	9.40E+01	5.21E+00	1.17E+03
Cr-51	D	3.19E+01	1.32E+02	1.81E+03	2.74E+02	6.19E+01	5.10E+01	9.12E+01	5.73E+01	2.70E+01	2.60E+02
Cr-51	W	3.19E+01	1.32E+02	1.81E+03	2.74E+02	6.19E+01	5.10E+01	9.12E+01	5.73E+01	2.70E+01	2.60E+02
Cr-51	Y	3.19E+01	1.32E+02	1.81E+03	2.74E+02	6.19E+01	5.10E+01	9.12E+01	5.73E+01	2.70E+01	2.60E+02
Mn-54	D	3.37E+04	2.09E+04	1.16E+05	1.79E+04	2.12E+04	5.34E+04	2.56E+04	1.98E+04	6.74E+03	4.37E+04
Mn-54	W	3.37E+04	2.09E+04	1.16E+05	1.79E+04	2.12E+04	5.34E+04	2.56E+04	1.98E+04	6.74E+03	4.37E+04
Fe-55	W	5.25E+01	1.36E+00	5.24E+01	2.59E+01	4.76E+01	9.02E+01	4.74E+01	3.23E+01	4.67E+01	5.76E+01
Fe-55	Y	5.25E+01	1.36E+00	5.24E+01	2.59E+01	4.76E+01	9.02E+01	4.74E+01	3.23E+01	4.67E+01	5.76E+01
Fe-59	W	4.50E+02	2.46E+02	2.23E+03	2.17E+02	2.99E+02	4.18E+02	2.73E+02	2.29E+02	1.83E+02	5.59E+02
Fe-59	Y	4.50E+02	2.46E+02	2.23E+03	2.17E+02	2.99E+02	4.18E+02	2.73E+02	2.29E+02	1.83E+02	5.59E+02
Co-57	W	6.87E+02	6.57E+02	1.05E+04	4.24E+02	4.89E+02	5.83E+02	8.23E+02	4.10E+02	2.54E+02	1.79E+03
Co-57	Y	6.87E+02	6.57E+02	1.05E+04	4.24E+02	4.89E+02	5.83E+02	8.23E+02	4.10E+02	2.54E+02	1.79E+03
Co-58	W	2.42E+03	3.11E+03	3.34E+04	1.76E+03	1.78E+03	1.78E+03	2.23E+03	1.06E+03	5.07E+02	7.15E+03
Co-58	Y	2.42E+03	3.11E+03	3.34E+04	1.76E+03	1.78E+03	1.78E+03	2.23E+03	1.06E+03	5.07E+02	7.15E+03
Co-60	W	1.99E+04	1.22E+04	9.27E+04	1.01E+04	1.31E+04	1.57E+04	1.25E+04	9.20E+03	7.15E+02	2.61E+04
Co-60	Y	1.99E+04	1.22E+04	9.27E+04	1.01E+04	1.31E+04	1.57E+04	1.25E+04	9.20E+03	7.15E+02	2.61E+04
Ni-59	D	3.50E+02	4.09E+02	2.69E+03	5.65E+02	3.55E+02	3.55E+02	3.63E+02	3.60E+02	3.87E+02	5.65E+02
Ni-59	W	3.50E+02	4.09E+02	2.69E+03	5.65E+02	3.55E+02	3.55E+02	3.63E+02	3.60E+02	3.87E+02	5.65E+02
Ni-63	D	8.47E+02	1.05E+03	9.15E+03	1.55E+03	8.47E+02	8.47E+02	8.47E+02	8.47E+02	8.47E+02	1.55E+03
Ni-63	W	8.47E+02	1.05E+03	9.15E+03	1.55E+03	8.47E+02	8.47E+02	8.47E+02	8.47E+02	8.47E+02	1.55E+03
Zn-65	D	1.59E+06	5.88E+05	8.46E+05	7.06E+05	9.47E+05	9.35E+05	9.69E+05	8.85E+05	6.27E+05	1.08E+06
Zn-65	W	1.59E+06	5.88E+05	8.46E+05	7.06E+05	9.47E+05	9.35E+05	9.69E+05	8.85E+05	6.27E+05	1.08E+06
Zn-65	Y	1.59E+06	5.88E+05	8.46E+05	7.06E+05	9.47E+05	9.35E+05	9.69E+05	8.85E+06	6.27E+05	1.08E+06
Se-75	D	1.41E+06	1.86E+06	1.68E+06	2.35E+06	6.10E+06	4.88E+06	1.76E+06	1.45E+06	9.62E+05	2.21E+06
Se-75	W	1.41E+06	1.86E+06	1.68E+06	2.35E+06	6.10E+06	4.88E+06	1.76E+06	1.45E+06	9.62E+05	2.21E+06
Rb-86	D	4.35E+05	8.23E+04	1.62E+05	2.50E+05	4.23E+05	4.23E+05	4.20E+05	4.18E+05	4.18E+05	4.28E+05
Sr-85	D	7.16E+03	1.07E+04	5.22E+04	1.75E+04	8.83E+03	7.55E+03	2.08E+04	2.10E+04	7.13E+03	1.86E+04
Sr-85	Y	5.81E+02	6.05E+03	6.32E+04	1.16E+04	2.69E+03	1.93E+03	4.52E+03	1.98E+03	2.83E+02	1.40E+04
Sr-89	D	8.03E+03	2.34E+04	8.15E+05	1.69E+04	8.03E+03	8.03E+03	4.91E+04	1.01E+05	8.03E+03	8.34E+04
Sr-89	Y	4.02E+02	2.34E+04	1.03E+06	4.58E+03	4.02E+02	4.02E+02	2.45E+03	5.06E+03	4.01E+02	8.62E+04
Sr-90	D	5.63E+04	8.23E+03	7.31E+05	8.88E+05	5.63E+04	5.37E+04	4.04E+06	8.08E+06	5.63E+04	8.22E+05
Sr-90	Y	2.82E+03	8.23E+03	9.02E+05	4.72E+04	2.82E+03	2.69E+03	2.02E+05	4.04E+05	2.82E+03	1.06E+05
Zr-95	W	6.60E+01	1.83E+02	3.99E+03	7.60E+01	5.83E+01	4.12E+01	9.24E+01	4.60E+01	4.49E+00	5.23E+02
Zr-95	Y	6.60E+01	1.83E+02	3.99E+03	7.60E+01	5.83E+01	4.12E+01	9.24E+01	4.60E+01	4.49E+00	5.23E+02
Nb-94	W	5.56E+03	2.49E+04	4.04E+05	6.24E+04	2.25E+04	9.09E+03	2.38E+04	2.47E+04	3.97E+03	6.24E+04
Nb-94	Y	5.56E+03	2.49E+04	4.04E+05	6.24E+04	2.25E+04	9.09E+03	2.38E+04	2.47E+04	3.97E+03	6.24E+04
Nb-95	Y	4.57E+03	9.00E+03	1.28E+05	4.40E+03	4.36E+03	2.77E+03	5.89E+03	2.81E+03	4.11E+02	2.25E+04
Mo-99	D	2.14E+04	3.45E+04	4.90E+04	2.04E+04	2.33E+05	3.92E+05	1.97E+04	3.17E+04	9.05E+03	5.52E+04
Mo-99	Y	3.04E+03	3.28E+04	8.62E+05	6.49E+03	1.36E+04	2.12E+04	4.33E+03	2.76E+03	2.35E+03	8.61E+04
Tc-99	D	6.22E+04	1.83E+05	6.28E+05	4.20E+04	8.99E+04	1.23E+05	6.32E+04	8.05E+04	2.77E+06	2.00E+05
Tc-99	W	6.22E+04	1.83E+05	6.28E+05	4.20E+04	8.99E+04	1.23E+05	6.32E+04	8.05E+04	2.77E+06	2.00E+05
Tc-99m	D	8.60E+03	2.55E+04	1.74E+04	3.02E+03	4.81E+03	5.42E+03	5.12E+03	3.20E+03	4.30E+04	1.13E+04
Tc-99m	W	8.60E+03	2.55E+04	1.74E+04	3.02E+03	4.81E+03	5.42E+03	5.12E+03	3.20E+03	4.30E+04	1.13E+04
Ru-103	Y	1.24E+03	1.85E+03	4.41E+04	9.67E+02	9.66E+02	8.54E+02	1.19E+03	7.24E+02	4.63E+02	5.69E+03
Ru-106	Y	1.56E+04	1.17E+04	4.75E+05	1.09E+04	1.51E+04	1.51E+04	1.52E+04	1.75E+04	1.47E+04	5.27E+04
Ag-108	D	6.34E+04	1.09E+05	8.07E+05	2.16E+05	1.11E+05	7.24E+05	6.96E+04	3.72E+04	1.37E+04	2.16E+05
Ag-108	W	6.34E+04	1.09E+05	8.07E+05	2.16E+05	1.11E+05	7.24E+05	6.96E+04	3.72E+04	1.37E+04	2.16E+05
Ag-108	Y	6.34E+04	1.09E+05	8.07E+05	2.16E+05	1.11E+05	7.24E+05	6.96E+04	3.72E+04	1.37E+04	2.16E+05
Ag-110	D	8.72E+04	1.58E+05	1.14E+06	3.07E+05	1.58E+05	9.06E+05	9.92E+04	5.17E+04	1.90E+04	3.07E+05
Ag-110	W	8.72E+04	1.58E+05	1.14E+06	3.07E+05	1.58E+05	9.06E+05	9.92E+04	5.17E+04	1.90E+04	3.07E+05
Ag-110	Y	8.72E+04	1.58E+05	1.14E+06	3.07E+05	1.58E+05	9.06E+05	9.92E+04	5.17E+04	1.90E+04	3.07E+05
Cd-109	D	4.34E+04	5.61E+04	6.35E+05	6.76E+05	5.61E+06	1.01E+06	5.09E+04	4.49E+04	3.79E+04	4.86E+05
Cd-109	W	4.34E+04	5.61E+04	6.35E+05	6.76E+05	5.61E+06	1.01E+06	5.09E+04	4.49E+04	3.79E+04	4.86E+05
Cd-109	Y	4.34E+04	5.61E+04	6.35E+05	6.76E+05	5.61E+06	1.01E+06	5.09E+04	4.49E+04	3.79E+04	4.86E+05
Sn-113	D	8.47E+01	4.77E+02	2.64E+04	2.77E+03	1.84E+02	1.45E+02	5.94E+02	7.80E+02	7.20E+01	2.77E+03
Sn-113	W	8.47E+01	4.77E+02	2.64E+04	2.77E+03	1.84E+02	1.45E+02	5.94E+02	7.80E+02	7.20E+01	2.77E+03
Sn-126	D	2.00E+03	5.33E+03	1.44E+05	1.76E+04	2.73E+03	2.28E+03	9.10E+03	1.68E+04	1.84E+03	1.76E+04
Sn-126	W	2.00E+03	5.33E+03	1.44E+05	1.76E+04	2.73E+03	2.28E+03	9.10E+03	1.68E+04	1.84E+03	1.76E+04
Sb-124	D	8.80E+02	5.65E+03	1.14E+05	1.41E+04	1.95E+03	3.49E+03	3.29E+03	4.27E+03	6.30E+02	1.41E+04
Sb-124	W	2.88E+02	5.04E+03	1.24E+05	1.46E+04	1.36E+03	1.16E+03	2.03E+03	1.01E+03	9.38E+01	1.46E+04
Sb-125	D	3.21E+02	1.59E+03	3.08E+04	4.05E+03	6.02E+02	1.33E+03	1.20E+03	3.13E+03	2.46E+02	4.05E+03
Sb-125	W	7.25E+01	1.37E+03	3.36E+04	4.03E+03	3.50E+02	3.34E+02	6.46E+02	4.83E+02	2.97E+01	4.03E+03
I-125	D	1.18E+02	1.97E+02	8.58E+01	4.36E+04	7.80E+01	8.51E+01	1.97E+02	1.91E+02	9.91E+05	3.00E+04
I-129	D	6.41E+02	6.12E+01	5.23E+01	2.48E+03	5.48E+02	5.65E+02	7.35E+02	6.86E+02	6.09E+06	1.83E+05
I-131	D	2.88E+02	8.90E+01	4.15E+01	7.09E+02	1.68E+02	1.91E+02	2.29E+02	2.59E+02	1.40E+06	4.25E+04
Cs-134	D	1.48E+05	4.61E+04	5.31E+04	6.31E+04	9.23E+04	9.23E+04	8.55E+04	8.18E+04	7.21E+04	1.03E+05
Cs-135	D	1.03E+04	2.22E+02	4.94E+02	6.10E+03	1.03E+04	1.03E+04	1.03E+04	1.20E+04	1.04E+04	1.04E+04
Cs-136	D	1.98E+04	7.79E+03	9.32E+03	8.35E+03	1.22E+04	1.26E+04	1.11E+04	9.97E+03	8.82E+03	1.30E+04

TABLE D-20 . PDCF-4 (Continued)

Nuclide and Solubility	Lung	Stomach Wall	LLI Wall	Total Body	Kidneys	Liver	Red Marrow	Bone	Thyroid	ICRP
Cs-137 D	9.23E+04	2.01E+04	2.39E+04	4.53E+04	7.14E+04	7.26E+04	6.81E+04	7.38E+04	6.20E+04	7.56E+04
Ba-140 D	1.43E+02	3.28E+02	1.56E+04	1.74E+02	9.46E+01	7.32E+01	2.09E+02	1.97E+02	6.21E+01	1.51E+03
La-140 W	2.80E+02	1.21E+03	1.96E+04	3.10E+02	2.42E+02	1.76E+02	3.05E+02	1.05E+02	6.78E+00	2.57E+03
Ce-141 Y	4.40E+00	7.34E+01	2.84E+03	1.54E+01	4.18E+00	3.67E+00	1.09E+01	3.56E+00	3.34E-02	2.58E+02
Ce-141 W	4.40E+00	7.34E+01	2.84E+03	1.54E+01	4.18E+00	3.67E+00	1.09E+01	3.56E+00	3.34E-02	2.58E+02
Ce-141 D	4.40E+00	7.34E+01	2.84E+03	1.54E+01	4.18E+00	3.67E+00	1.09E+01	3.56E+00	3.34E-02	2.58E+02
Ce-144 Y	3.12E+00	1.83E+02	3.82E+03	2.71E+01	9.29E+00	6.78E+00	1.22E+01	1.31E+01	3.94E-01	1.87E+03
Ce-144 W	3.12E+00	1.83E+02	3.82E+03	2.71E+01	9.29E+00	6.78E+00	1.22E+01	1.31E+01	3.94E-01	1.87E+03
Ce-144 D	3.12E+00	1.83E+02	3.82E+03	2.71E+01	9.29E+00	6.78E+00	1.22E+01	1.31E+01	3.94E-01	1.87E+03
Eu-152 W	2.95E+02	7.92E+02	1.23E+04	2.16E+03	5.72E+02	3.69E+03	1.13E+03	2.57E+03	8.18E+01	2.16E+03
Eu-154 W	2.66E+02	1.01E+03	2.22E+04	3.18E+03	5.52E+02	4.56E+03	1.42E+03	5.49E+03	7.02E+01	3.18E+03
Yb-169 W	5.88E+00	3.16E+02	8.59E+03	1.02E+03	5.91E+01	4.05E+01	2.01E+02	8.85E+01	4.44E-01	9.80E+02
Yb-169 Y	5.88E+00	3.16E+02	8.59E+03	1.02E+03	5.91E+01	4.05E+01	2.01E+02	8.85E+01	4.44E-01	9.80E+02
Pb-210 W	1.46E+05	9.46E+01	9.85E+03	8.25E+05	4.56E+05	6.79E+05	4.85E+05	4.66E+06	1.46E+05	3.77E+05
Po-210 W	1.78E+04	1.56E+02	6.17E+03	1.40E+04	3.19E+05	5.48E+04	1.85E+04	8.22E+03	1.78E+04	6.99E+04
Po-210 D	1.78E+04	1.56E+02	6.17E+03	1.40E+04	3.19E+05	5.48E+04	1.85E+04	8.22E+03	1.78E+04	6.99E+04
Rn-222 *	0.00E+00	0.00E+00	0.00E+00	0.00E+00	0.00E+00	0.00E+00	0.00E+00	0.00E+00	0.00E+00	0.00E+00
Ra-226 W	1.01E+06	9.19E+03	5.65E+05	5.82E+06	1.01E+06	1.01E+06	3.77E+06	3.42E+07	1.01E+06	2.36E+06
Ra-228 W	7.02E+05	4.01E+03	1.22E+05	2.91E+06	6.85E+05	6.85E+05	2.23E+06	1.68E+07	6.85E+05	1.35E+06
Ac-227 Y	8.17E+04	2.77E+02	1.84E+04	9.65E+05	1.48E+06	1.19E+07	7.42E+06	7.42E+07	8.17E+04	4.10E+06
Ac-227 W	8.17E+04	2.77E+02	1.84E+04	9.65E+05	1.48E+06	1.19E+07	7.42E+06	7.42E+07	8.17E+04	4.10E+06
Th-228 Y	3.76E+03	2.46E+03	2.36E+05	1.90E+04	3.95E+03	1.17E+04	1.90E+05	2.06E+06	3.72E+03	1.05E+05
Th-228 W	3.76E+03	2.46E+03	2.36E+05	1.90E+04	3.95E+03	1.17E+04	1.90E+05	2.06E+06	3.72E+03	1.05E+05
Th-229 Y	5.06E+03	2.45E+03	1.05E+05	1.15E+05	4.73E+03	1.82E+04	1.30E+06	1.60E+07	4.71E+03	6.47E+05
Th-229 W	5.06E+03	2.45E+03	1.05E+05	1.15E+05	4.73E+03	1.82E+04	1.30E+06	1.60E+07	4.71E+03	6.47E+05
Th-230 Y	2.29E+03	2.02E+03	9.02E+04	4.63E+04	2.16E+03	1.09E+04	5.01E+05	8.02E+06	2.29E+03	3.15E+05
Th-230 W	2.29E+03	2.02E+03	9.02E+04	4.63E+04	2.16E+03	1.09E+04	5.01E+05	8.02E+06	2.29E+03	3.15E+05
Th-232 Y	1.99E+03	1.74E+03	7.52E+04	4.83E+04	1.88E+03	9.42E+03	5.51E+05	9.02E+06	1.98E+03	3.47E+05
Th-232 W	1.99E+03	1.74E+03	7.52E+04	4.83E+04	1.88E+03	9.42E+03	5.51E+05	9.02E+06	1.98E+03	3.47E+05
Pa-231 Y	1.96E+05	4.19E+03	1.69E+05	1.87E+06	3.21E+06	2.49E+07	1.34E+07	1.59E+08	1.96E+05	8.51E+06
Pa-231 W	1.96E+05	4.19E+03	1.69E+05	1.87E+06	3.21E+06	2.49E+07	1.34E+07	1.59E+08	1.96E+05	8.51E+06
U-232 Y	3.96E+02	1.42E+03	6.09E+04	2.56E+04	3.96E+04	3.50E+02	2.16E+05	2.38E+06	3.69E+02	1.05E+05
U-232 W	9.87E+03	1.96E+03	6.09E+04	6.40E+05	1.01E+06	8.71E+03	5.48E+06	5.94E+07	9.20E+03	2.49E+06
U-232 D	9.87E+03	1.96E+03	6.09E+04	6.40E+05	1.01E+06	8.71E+03	5.48E+06	5.94E+07	9.20E+03	2.49E+06
U-233 Y	2.12E+02	1.27E+03	5.48E+04	7.31E+03	2.07E+04	1.85E+02	2.92E+03	4.26E+04	1.95E+02	7.71E+03
U-233 W	5.30E+03	1.68E+03	5.18E+04	1.77E+05	5.18E+05	4.60E+03	7.31E+04	1.07E+06	4.87E+03	7.95E+04
U-233 D	5.30E+03	1.68E+03	5.18E+04	1.77E+05	5.18E+05	4.60E+03	7.31E+04	1.07E+06	4.87E+03	7.95E+04
U-234 Y	2.09E+02	1.27E+03	5.48E+04	7.25E+03	2.04E+04	1.93E+02	2.85E+03	4.26E+04	1.93E+02	7.65E+03
U-234 W	5.24E+03	1.67E+03	5.18E+04	1.77E+05	5.18E+05	4.81E+03	7.01E+04	1.07E+06	4.81E+03	7.83E+04
U-234 D	5.24E+03	1.67E+03	5.18E+04	1.77E+05	5.18E+05	4.81E+03	7.01E+04	1.07E+06	4.81E+03	7.83E+04
U-235 Y	2.27E+02	1.23E+03	5.79E+04	6.58E+03	1.84E+04	1.85E+02	2.25E+03	3.66E+04	1.77E+02	7.43E+03
U-235 W	4.93E+03	1.64E+03	5.48E+04	1.58E+05	4.57E+05	4.20E+03	5.48E+04	8.83E+05	4.42E+03	6.82E+04
U-235 D	4.93E+03	1.64E+03	5.48E+04	1.58E+05	4.57E+05	4.20E+03	5.48E+04	8.83E+05	4.42E+03	6.82E+04
U-236 Y	1.97E+02	1.19E+03	5.18E+04	6.82E+03	1.93E+04	1.81E+02	2.45E+03	3.96E+04	1.81E+02	7.16E+03
U-236 W	4.93E+03	1.57E+03	4.87E+04	1.64E+05	4.87E+05	4.54E+03	6.09E+04	9.44E+05	4.54E+03	7.22E+04
U-236 D	4.93E+03	1.57E+03	4.87E+04	1.64E+05	4.87E+05	4.54E+03	6.09E+04	9.44E+05	4.54E+03	7.22E+04
U-238 Y	1.87E+02	1.12E+03	5.18E+04	6.46E+03	1.82E+04	1.63E+02	2.33E+03	3.35E+04	1.71E+02	6.82E+03
U-238 W	4.66E+03	1.48E+03	4.87E+04	1.55E+05	4.57E+05	4.08E+03	5.79E+04	8.53E+05	4.30E+03	6.70E+04
U-238 D	4.66E+03	1.48E+03	4.87E+04	1.55E+05	4.57E+05	4.08E+03	5.79E+04	8.53E+05	4.30E+03	6.70E+04
Np-237 Y	8.59E+05	3.75E+04	1.43E+06	7.16E+06	1.50E+07	1.15E+08	4.37E+07	6.23E+08	8.59E+05	3.36E+07
Np-237 W	8.59E+05	3.75E+04	1.43E+06	7.16E+06	1.50E+07	1.15E+08	4.37E+07	6.23E+08	8.59E+05	3.36E+07
Pu-236 Y	2.58E+01	3.33E+02	1.48E+04	3.01E+02	5.46E+02	4.22E+03	1.40E+03	1.61E+04	2.58E+01	2.22E+03
Pu-236 W	2.58E+01	3.33E+02	1.48E+04	3.01E+02	5.46E+02	4.22E+03	1.40E+03	1.61E+04	2.58E+01	2.22E+03
Pu-238 Y	2.17E+02	3.16E+02	1.41E+04	1.90E+03	3.84E+03	2.95E+04	1.14E+04	1.41E+05	2.17E+02	9.20E+03
Pu-238 W	2.17E+02	3.16E+02	1.41E+04	1.90E+03	3.84E+03	2.95E+04	1.14E+04	1.41E+05	2.17E+02	9.20E+03
Pu-239 Y	2.44E+02	2.97E+02	1.34E+04	2.10E+03	4.25E+03	3.29E+04	1.28E+04	1.75E+05	2.44E+02	1.05E+04
Pu-239 W	2.44E+02	2.97E+02	1.34E+04	2.10E+03	4.25E+03	3.29E+04	1.28E+04	1.75E+05	2.44E+02	1.05E+04
Pu-240 Y	2.43E+02	2.97E+02	1.34E+04	2.10E+03	4.24E+03	3.29E+04	1.28E+04	1.75E+05	2.43E+02	1.05E+04
Pu-240 W	2.43E+02	2.97E+02	1.34E+04	2.10E+03	4.24E+03	3.29E+04	1.28E+04	1.75E+05	2.43E+02	1.05E+04
Pu-241 Y	5.04E+00	1.50E+00	6.66E+01	4.16E+01	8.26E+01	6.38E+02	2.59E+02	3.24E+03	5.03E+00	1.87E+02
Pu-241 W	5.04E+00	1.50E+00	6.66E+01	4.16E+01	8.26E+01	6.38E+02	2.59E+02	3.24E+03	5.03E+00	1.87E+02
Pu-242 Y	2.32E+02	2.83E+02	1.28E+04	2.00E+03	4.04E+03	3.16E+04	1.21E+04	1.75E+05	2.32E+02	1.03E+04
Pu-242 W	2.32E+02	2.83E+02	1.28E+04	2.00E+03	4.04E+03	3.16E+04	1.21E+04	1.75E+05	2.32E+02	1.03E+04
Pu-244 Y	2.49E+02	3.14E+02	2.01E+04	2.02E+03	4.03E+03	3.09E+04	1.14E+04	1.75E+05	2.31E+02	1.09E+04
Pu-244 W	2.49E+02	3.14E+02	2.01E+04	2.02E+03	4.03E+03	3.09E+04	1.14E+04	1.75E+05	2.31E+02	1.09E+04
Am-241 Y	8.76E+04	3.54E+03	1.53E+05	7.30E+05	1.61E+06	1.24E+07	4.67E+06	5.84E+07	8.76E+04	3.35E+06
Am-241 W	8.76E+04	3.54E+03	1.53E+05	7.30E+05	1.61E+06	1.24E+07	4.67E+06	5.84E+07	8.76E+04	3.35E+06
Am-243 Y	9.49E+04	3.90E+03	1.61E+05	7.30E+05	1.61E+06	1.24E+07	4.67E+06	6.20E+07	9.49E+04	3.45E+06
Am-243 W	9.49E+04	3.90E+03	1.61E+05	7.30E+05	1.61E+06	1.24E+07	4.67E+06	6.20E+07	9.49E+04	3.45E+06
Cm-242 Y	8.12E+02	1.57E+03	6.87E+04	7.70E+03	1.71E+04	1.31E+05	4.18E+04	4.48E+05	8.12E+02	3.52E+04
Cm-242 W	8.12E+02	1.57E+03	6.87E+04	7.70E+03	1.71E+04	1.31E+05	4.18E+04	4.48E+05	8.12E+02	3.52E+04
Cm-243 Y	2.48E+04	1.77E+03	7.46E+04	2.12E+05	4.48E+05	3.58E+06	1.25E+06	1.43E+07	2.45E+04	8.72E+05
Cm-243 W	2.48E+04	1.77E+03	7.46E+04	2.12E+05	4.48E+05	3.58E+06	1.25E+06	1.43E+07	2.45E+04	8.72E+05
Cm-244 Y	1.91E+04	1.48E+03	6.57E+04	1.67E+05	3.58E+05	2.78E+06	9.85E+05	1.13E+07	1.91E+04	6.90E+05
Cm-244 W	1.91E+04	1.48E+03	6.57E+04	1.67E+05	3.58E+05	2.78E+06	9.85E+05	1.13E+07	1.91E+04	6.90E+05
Cm-248 Y	1.73E+05	2.33E+04	3.28E+05	1.19E+06	2.42E+06	1.88E+07	1.82E+06	2.63E+07	1.43E+05	2.60E+06
Cm-248 W	1.73E+05	2.33E+04	3.28E+05	1.19E+06	2.42E+06	1.88E+07	1.82E+06	2.63E+07	1.43E+05	2.60E+06
Cf-252 Y	9.79E+03	6.27E+03	1.70E+05	6.86E+04	1.55E+05	1.19E+06	1.94E+05	2.06E+06	7.49E+03	1.99E+05
Cf-252 W	9.79E+03	6.27E+03	1.70E+05	6.86E+04	1.55E+05	1.19E+06	1.94E+05	2.06E+06	7.49E+03	1.99E+05

000437

TABLE D-21 . PDCF-5: PDCF for Direct Gamma Radiation (Volume Source)

Nuclide and Solubility		Lung	Stomach Wall	LLI Wall	Total Body	Kidneys	Liver	Red Marrow	Bone	Thyroid	ICRP
H-3	•	0.00E+00	0.00E+00	0.00E+00	0.00E+00	0.00E+00	0.00E+00	0.00E+00	0.00E+00	0.00E+00	0.00E+00
C-14	•	0.00E+00	0.00E+00	0.00E+00	0.00E+00	0.00E+00	0.00E+00	0.00E+00	0.00E+00	0.00E+00	0.00E+00
Na-22	D	1.34E+07	1.34E+07	1.34E+07	1.34E+07	1.34E+07	1.34E+07	1.34E+07	1.34E+07	1.34E+07	1.34E+07
P-32	D	0.00E+00	0.00E+00	0.00E+00	0.00E+00	0.00E+00	0.00E+00	0.00E+00	0.00E+00	0.00E+00	0.00E+00
P-32	W	0.00E+00	0.00E+00	0.00E+00	0.00E+00	0.00E+00	0.00E+00	0.00E+00	0.00E+00	0.00E+00	0.00E+00
P-33	D	0.00E+00	0.00E+00	0.00E+00	0.00E+00	0.00E+00	0.00E+00	0.00E+00	0.00E+00	0.00E+00	0.00E+00
P-33	W	0.00E+00	0.00E+00	0.00E+00	0.00E+00	0.00E+00	0.00E+00	0.00E+00	0.00E+00	0.00E+00	0.00E+00
S-35	D	0.00E+00	0.00E+00	0.00E+00	0.00E+00	0.00E+00	0.00E+00	0.00E+00	0.00E+00	0.00E+00	0.00E+00
S-35	W	0.00E+00	0.00E+00	0.00E+00	0.00E+00	0.00E+00	0.00E+00	0.00E+00	0.00E+00	0.00E+00	0.00E+00
Cl-36	D	0.00E+00	0.00E+00	0.00E+00	0.00E+00	0.00E+00	0.00E+00	0.00E+00	0.00E+00	0.00E+00	0.00E+00
Cl-36	W	0.00E+00	0.00E+00	0.00E+00	0.00E+00	0.00E+00	0.00E+00	0.00E+00	0.00E+00	0.00E+00	0.00E+00
Ca-45	W	6.42E-03	6.42E-03	6.42E-03	6.42E-03	6.42E-03	6.42E-03	6.42E-03	6.42E-03	6.42E-03	6.42E-03
Sc-46	Y	1.24E+07	1.24E+07	1.24E+07	1.24E+07	1.24E+07	1.24E+07	1.24E+07	1.24E+07	1.24E+07	1.24E+07
Cr-51	D	1.85E+05	1.85E+05	1.85E+05	1.85E+05	1.85E+05	1.85E+05	1.85E+05	1.85E+05	1.85E+05	1.85E+05
Cr-51	W	1.85E+05	1.85E+05	1.85E+05	1.85E+05	1.85E+05	1.85E+05	1.85E+05	1.85E+05	1.85E+05	1.85E+05
Cr-51	Y	1.85E+05	1.85E+05	1.85E+05	1.85E+05	1.85E+05	1.85E+05	1.85E+05	1.85E+05	1.85E+05	1.85E+05
Mn-54	D	5.10E+06	5.10E+06	5.10E+06	5.10E+06	5.10E+06	5.10E+06	5.10E+06	5.10E+06	5.10E+06	5.10E+06
Mn-54	W	5.10E+06	5.10E+06	5.10E+06	5.10E+06	5.10E+06	5.10E+06	5.10E+06	5.10E+06	5.10E+06	5.10E+06
Fe-55	W	0.00E+00	0.00E+00	0.00E+00	0.00E+00	0.00E+00	0.00E+00	0.00E+00	0.00E+00	0.00E+00	0.00E+00
Fe-55	Y	0.00E+00	0.00E+00	0.00E+00	0.00E+00	0.00E+00	0.00E+00	0.00E+00	0.00E+00	0.00E+00	0.00E+00
Fe-59	W	7.34E+06	7.34E+06	7.34E+06	7.34E+06	7.34E+06	7.34E+06	7.34E+06	7.34E+06	7.34E+06	7.34E+06
Fe-59	Y	7.34E+06	7.34E+06	7.34E+06	7.34E+06	7.34E+06	7.34E+06	7.34E+06	7.34E+06	7.34E+06	7.34E+06
Co-57	W	5.61E+05	5.61E+05	5.61E+05	5.61E+05	5.61E+05	5.61E+05	5.61E+05	5.61E+05	5.61E+05	5.61E+05
Co-57	Y	5.61E+05	5.61E+05	5.61E+05	5.61E+05	5.61E+05	5.61E+05	5.61E+05	5.61E+05	5.61E+05	5.61E+05
Co-58	W	5.01E+06	5.01E+06	5.01E+06	5.01E+06	5.01E+06	5.01E+06	5.01E+06	5.01E+06	5.01E+06	5.01E+06
Co-58	Y	5.01E+06	5.01E+06	5.01E+06	5.01E+06	5.01E+06	5.01E+06	5.01E+06	5.01E+06	5.01E+06	5.01E+06
Co-60	W	1.55E+07	1.55E+07	1.55E+07	1.55E+07	1.55E+07	1.55E+07	1.55E+07	1.55E+07	1.55E+07	1.55E+07
Co-60	Y	1.55E+07	1.55E+07	1.55E+07	1.55E+07	1.55E+07	1.55E+07	1.55E+07	1.55E+07	1.55E+07	1.55E+07
Ni-59	D	0.00E+00	0.00E+00	0.00E+00	0.00E+00	0.00E+00	0.00E+00	0.00E+00	0.00E+00	0.00E+00	0.00E+00
Ni-59	W	0.00E+00	0.00E+00	0.00E+00	0.00E+00	0.00E+00	0.00E+00	0.00E+00	0.00E+00	0.00E+00	0.00E+00
Ni-63	D	0.00E+00	0.00E+00	0.00E+00	0.00E+00	0.00E+00	0.00E+00	0.00E+00	0.00E+00	0.00E+00	0.00E+00
Ni-63	W	0.00E+00	0.00E+00	0.00E+00	0.00E+00	0.00E+00	0.00E+00	0.00E+00	0.00E+00	0.00E+00	0.00E+00
Zn-65	D	3.50E+06	3.50E+06	3.50E+06	3.50E+06	3.50E+06	3.50E+06	3.50E+06	3.50E+06	3.50E+06	3.50E+06
Zn-65	W	3.50E+06	3.50E+06	3.50E+06	3.50E+06	3.50E+06	3.50E+06	3.50E+06	3.50E+06	3.50E+06	3.50E+06
Zn-65	Y	3.50E+06	3.50E+06	3.50E+06	3.50E+06	3.50E+06	3.50E+06	3.50E+06	3.50E+06	3.50E+06	3.50E+06
Se-75	D	1.99E+06	1.99E+06	1.99E+06	1.99E+06	1.99E+06	1.99E+06	1.99E+06	1.99E+06	1.99E+06	1.99E+06
Se-75	W	1.99E+06	1.99E+06	1.99E+06	1.99E+06	1.99E+06	1.99E+06	1.99E+06	1.99E+06	1.99E+06	1.99E+06
Rb-86	D	5.84E+05	5.84E+05	5.84E+05	5.84E+05	5.84E+05	5.84E+05	5.84E+05	5.84E+05	5.84E+05	5.84E+05
Sr-85	D	3.10E+06	3.10E+06	3.10E+06	3.10E+06	3.10E+06	3.10E+06	3.10E+06	3.10E+06	3.10E+06	3.10E+06
Sr-85	Y	3.10E+06	3.10E+06	3.10E+06	3.10E+06	3.10E+06	3.10E+06	3.10E+06	3.10E+06	3.10E+06	3.10E+06
Sr-89	D	5.32E+01	5.32E+01	5.32E+01	5.32E+01	5.32E+01	5.32E+01	5.32E+01	5.32E+01	5.32E+01	5.32E+01
Sr-89	Y	5.32E+01	5.32E+01	5.32E+01	5.32E+01	5.32E+01	5.32E+01	5.32E+01	5.32E+01	5.32E+01	5.32E+01
Sr-90	D	1.92E-01	1.92E-01	1.92E-01	1.92E-01	1.92E-01	1.92E-01	1.92E-01	1.92E-01	1.92E-01	1.92E-01
Sr-90	Y	1.92E-01	1.92E-01	1.92E-01	1.92E-01	1.92E-01	1.92E-01	1.92E-01	1.92E-01	1.92E-01	1.92E-01
Zr-95	W	9.23E+06	9.23E+06	9.23E+06	9.23E+06	9.23E+06	9.23E+06	9.23E+06	9.23E+06	9.23E+06	9.23E+06
Zr-95	Y	9.23E+06	9.23E+06	9.23E+06	9.23E+06	9.23E+06	9.23E+06	9.23E+06	9.23E+06	9.23E+06	9.23E+06
Nb-94	W	9.50E+06	9.50E+06	9.50E+06	9.50E+06	9.50E+06	9.50E+06	9.50E+06	9.50E+06	9.50E+06	9.50E+06
Nb-94	Y	9.50E+06	9.50E+06	9.50E+06	9.50E+06	9.50E+06	9.50E+06	9.50E+06	9.50E+06	9.50E+06	9.50E+06
Nb-95	Y	4.70E+06	4.70E+06	4.70E+06	4.70E+06	4.70E+06	4.70E+06	4.70E+06	4.70E+06	4.70E+06	4.70E+06
Mo-99	D	8.62E+05	8.62E+05	8.62E+05	8.62E+05	8.62E+05	8.62E+05	8.62E+05	8.62E+05	8.62E+05	8.62E+05
Mo-99	Y	8.62E+05	8.62E+05	8.62E+05	8.62E+05	8.62E+05	8.62E+05	8.62E+05	8.62E+05	8.62E+05	8.62E+05
Tc-99	D	1.39E-02	1.39E-02	1.39E-02	1.39E-02	1.39E-02	1.39E-02	1.39E-02	1.39E-02	1.39E-02	1.39E-02
Tc-99	W	1.39E-02	1.39E-02	1.39E-02	1.39E-02	1.39E-02	1.39E-02	1.39E-02	1.39E-02	1.39E-02	1.39E-02
Tc-99m	D	5.89E+05	5.89E+05	5.89E+05	5.89E+05	5.89E+05	5.89E+05	5.89E+05	5.89E+05	5.89E+05	5.89E+05
Tc-99m	W	5.89E+05	5.89E+05	5.89E+05	5.89E+05	5.89E+05	5.89E+05	5.89E+05	5.89E+05	5.89E+05	5.89E+05
Ru-103	Y	2.77E+06	2.77E+06	2.77E+06	2.77E+06	2.77E+06	2.77E+06	2.77E+06	2.77E+06	2.77E+06	2.77E+06
Ru-106	Y	1.11E+06	1.11E+06	1.11E+06	1.11E+06	1.11E+06	1.11E+06	1.11E+06	1.11E+06	1.11E+06	1.11E+06
Ag-108	D	8.81E+06	8.81E+06	8.81E+06	8.81E+06	8.81E+06	8.81E+06	8.81E+06	8.81E+06	8.81E+06	8.81E+06
Ag-108	W	8.81E+06	8.81E+06	8.81E+06	8.81E+06	8.81E+06	8.81E+06	8.81E+06	8.81E+06	8.81E+06	8.81E+06
Ag-108	Y	8.81E+06	8.81E+06	8.81E+06	8.81E+06	8.81E+06	8.81E+06	8.81E+06	8.81E+06	8.81E+06	8.81E+06
Ag-110	D	1.66E+07	1.66E+07	1.66E+07	1.66E+07	1.66E+07	1.66E+07	1.66E+07	1.66E+07	1.66E+07	1.66E+07
Ag-110	W	1.66E+07	1.66E+07	1.66E+07	1.66E+07	1.66E+07	1.66E+07	1.66E+07	1.66E+07	1.66E+07	1.66E+07
Ag-110	Y	1.66E+07	1.66E+07	1.66E+07	1.66E+07	1.66E+07	1.66E+07	1.66E+07	1.66E+07	1.66E+07	1.66E+07
Cd-109	D	2.27E+05	2.27E+05	2.27E+05	2.27E+05	2.27E+05	2.27E+05	2.27E+05	2.27E+05	2.27E+05	2.27E+05
Cd-109	W	2.27E+05	2.27E+05	2.27E+05	2.27E+05	2.27E+05	2.27E+05	2.27E+05	2.27E+05	2.27E+05	2.27E+05
Cd-109	Y	2.27E+05	2.27E+05	2.27E+05	2.27E+05	2.27E+05	2.27E+05	2.27E+05	2.27E+05	2.27E+05	2.27E+05
Sn-113	D	1.48E+06	1.48E+06	1.48E+06	1.48E+06	1.48E+06	1.48E+06	1.48E+06	1.48E+06	1.48E+06	1.48E+06
Sn-113	W	1.48E+06	1.48E+06	1.48E+06	1.48E+06	1.48E+06	1.48E+06	1.48E+06	1.48E+06	1.48E+06	1.48E+06
Sn-126	D	1.18E+07	1.18E+07	1.18E+07	1.18E+07	1.18E+07	1.18E+07	1.18E+07	1.18E+07	1.18E+07	1.18E+07
Sn-126	W	1.18E+07	1.18E+07	1.18E+07	1.18E+07	1.18E+07	1.18E+07	1.18E+07	1.18E+07	1.18E+07	1.18E+07
Sb-124	D	1.11E+07	1.11E+07	1.11E+07	1.11E+07	1.11E+07	1.11E+07	1.11E+07	1.11E+07	1.11E+07	1.11E+07
Sb-124	W	1.11E+07	1.11E+07	1.11E+07	1.11E+07	1.11E+07	1.11E+07	1.11E+07	1.11E+07	1.11E+07	1.11E+07
Sb-125	D	2.49E+06	2.49E+06	2.49E+06	2.49E+06	2.49E+06	2.49E+06	2.49E+06	2.49E+06	2.49E+06	2.49E+06
Sb-125	W	2.49E+06	2.49E+06	2.49E+06	2.49E+06	2.49E+06	2.49E+06	2.49E+06	2.49E+06	2.49E+06	2.49E+06
I-125	D	3.14E+05	3.14E+05	3.14E+05	3.14E+05	3.14E+05	3.14E+05	3.14E+05	3.14E+05	3.14E+05	3.14E+05
I-129	D	1.61E+04	1.61E+04	1.61E+04	1.61E+04	1.61E+04	1.61E+04	1.61E+04	1.61E+04	1.61E+04	1.61E+04
I-131	D	2.16E+06	2.16E+06	2.16E+06	2.16E+06	2.16E+06	2.16E+06	2.16E+06	2.16E+06	2.16E+06	2.16E+06
Cs-134	D	9.41E+06	9.41E+06	9.41E+06	9.41E+06	9.41E+06	9.41E+06	9.41E+06	9.41E+06	9.41E+06	9.41E+06
Cs-135	D	0.00E+00	0.00E+00	0.00E+00	0.00E+00	0.00E+00	0.00E+00	0.00E+00	0.00E+00	0.00E+00	0.00E+00
Cs-136	D	1.30E+07	1.30E+07	1.30E+07	1.30E+07	1.30E+07	1.30E+07	1.30E+07	1.30E+07	1.30E+07	1.30E+07

TABLE D-21 . PDCF-5 (Continued)

Nuclide and Solubility	Lung	Stomach Wall	LLI Wall	Total Body	Kidneys	Liver	Red Marrow	Bone	Thyroid	ICRP
Cs-137 D	3.39E+06	3.39E+06	3.39E+06	3.39E+06	3.39E+06	3.39E+06	3.39E+06	3.39E+06	3.39E+06	3.39E+06
Ba-140 D	1.05E+06	1.05E+06	1.05E+06	1.05E+06	1.05E+06	1.05E+06	1.05E+06	1.05E+06	1.05E+06	1.05E+06
La-140 W	1.39E+07	1.39E+07	1.39E+07	1.39E+07	1.39E+07	1.39E+07	1.39E+07	1.39E+07	1.39E+07	1.39E+07
Ce-141 Y	3.70E+05	3.70E+05	3.70E+05	3.70E+05	3.70E+05	3.70E+05	3.70E+05	3.70E+05	3.70E+05	3.70E+05
Ce-141 W	3.70E+05	3.70E+05	3.70E+05	3.70E+05	3.70E+05	3.70E+05	3.70E+05	3.70E+05	3.70E+05	3.70E+05
Ce-141 D	3.70E+05	3.70E+05	3.70E+05	3.70E+05	3.70E+05	3.70E+05	3.70E+05	3.70E+05	3.70E+05	3.70E+05
Ce-144 Y	2.70E+05	2.70E+05	2.70E+05	2.70E+05	2.70E+05	2.70E+05	2.70E+05	2.70E+05	2.70E+05	2.70E+05
Ce-144 W	2.70E+05	2.70E+05	2.70E+05	2.70E+05	2.70E+05	2.70E+05	2.70E+05	2.70E+05	2.70E+05	2.70E+05
Ce-144 D	2.70E+05	2.70E+05	2.70E+05	2.70E+05	2.70E+05	2.70E+05	2.70E+05	2.70E+05	2.70E+05	2.70E+05
Eu-152 W	6.20E+06	6.20E+06	6.20E+06	6.20E+06	6.20E+06	6.20E+06	6.20E+06	6.20E+06	6.20E+06	6.20E+06
Eu-154 W	6.91E+06	6.91E+06	6.91E+06	6.91E+06	6.91E+06	6.91E+06	6.91E+06	6.91E+06	6.91E+06	6.91E+06
Yb-169 W	1.41E+06	1.41E+06	1.41E+06	1.41E+06	1.41E+06	1.41E+06	1.41E+06	1.41E+06	1.41E+06	1.41E+06
Yb-169 Y	1.41E+06	1.41E+06	1.41E+06	1.41E+06	1.41E+06	1.41E+06	1.41E+06	1.41E+06	1.41E+06	1.41E+06
Pb-210 W	1.03E+04	1.03E+04	1.03E+04	1.03E+04	1.03E+04	1.03E+04	1.03E+04	1.03E+04	1.03E+04	1.03E+04
Po-210 W	1.09E+02	1.09E+02	1.09E+02	1.09E+02	1.09E+02	1.09E+02	1.09E+02	1.09E+02	1.09E+02	1.09E+02
Po-210 D	1.09E+02	1.09E+02	1.09E+02	1.09E+02	1.09E+02	1.09E+02	1.09E+02	1.09E+02	1.09E+02	1.09E+02
Rn-222 *	9.51E+06	9.51E+06	9.51E+06	9.51E+06	9.51E+06	9.51E+06	9.51E+06	9.51E+06	9.51E+06	9.51E+06
Ra-226 W	3.16E+04	3.16E+04	3.16E+04	3.16E+04	3.16E+04	3.16E+04	3.16E+04	3.16E+04	3.16E+04	3.16E+04
Ra-228 W	4.31E+06	4.31E+06	4.31E+06	4.31E+06	4.31E+06	4.31E+06	4.31E+06	4.31E+06	4.31E+06	4.31E+06
Ac-227 Y	1.78E+06	1.78E+06	1.78E+06	1.78E+06	1.78E+06	1.78E+06	1.78E+06	1.78E+06	1.78E+06	1.78E+06
Ac-227 W	1.78E+06	1.78E+06	1.78E+06	1.78E+06	1.78E+06	1.78E+06	1.78E+06	1.78E+06	1.78E+06	1.78E+06
Th-228 Y	8.62E+06	8.62E+06	8.62E+06	8.62E+06	8.62E+06	8.62E+06	8.62E+06	8.62E+06	8.62E+06	8.62E+06
Th-228 W	8.62E+06	8.62E+06	8.62E+06	8.62E+06	8.62E+06	8.62E+06	8.62E+06	8.62E+06	8.62E+06	8.62E+06
Th-229 Y	1.20E+06	1.20E+06	1.20E+06	1.20E+06	1.20E+06	1.20E+06	1.20E+06	1.20E+06	1.20E+06	1.20E+06
Th-229 W	1.20E+06	1.20E+06	1.20E+06	1.20E+06	1.20E+06	1.20E+06	1.20E+06	1.20E+06	1.20E+06	1.20E+06
Th-230 Y	1.07E+03	1.07E+03	1.07E+03	1.07E+03	1.07E+03	1.07E+03	1.07E+03	1.07E+03	1.07E+03	1.07E+03
Th-230 W	1.07E+03	1.07E+03	1.07E+03	1.07E+03	1.07E+03	1.07E+03	1.07E+03	1.07E+03	1.07E+03	1.07E+03
Th-232 Y	0.00E+00	0.00E+00	0.00E+00	0.00E+00	0.00E+00	0.00E+00	0.00E+00	0.00E+00	0.00E+00	0.00E+00
Th-232 W	0.00E+00	0.00E+00	0.00E+00	0.00E+00	0.00E+00	0.00E+00	0.00E+00	0.00E+00	0.00E+00	0.00E+00
Pa-231 Y	2.05E+05	2.05E+05	2.05E+05	2.05E+05	2.05E+05	2.05E+05	2.05E+05	2.05E+05	2.05E+05	2.05E+05
Pa-231 W	2.05E+05	2.05E+05	2.05E+05	2.05E+05	2.05E+05	2.05E+05	2.05E+05	2.05E+05	2.05E+05	2.05E+05
U-232 Y	8.32E+02	8.32E+02	8.32E+02	8.32E+02	8.32E+02	8.32E+02	8.32E+02	8.32E+02	8.32E+02	8.32E+02
U-232 W	8.32E+02	8.32E+02	8.32E+02	8.32E+02	8.32E+02	8.32E+02	8.32E+02	8.32E+02	8.32E+02	8.32E+02
U-232 D	8.32E+02	8.32E+02	8.32E+02	8.32E+02	8.32E+02	8.32E+02	8.32E+02	8.32E+02	8.32E+02	8.32E+02
U-233 Y	3.16E+02	3.16E+02	3.16E+02	3.16E+02	3.16E+02	3.16E+02	3.16E+02	3.16E+02	3.16E+02	3.16E+02
U-233 W	3.16E+02	3.16E+02	3.16E+02	3.16E+02	3.16E+02	3.16E+02	3.16E+02	3.16E+02	3.16E+02	3.16E+02
U-233 D	3.16E+02	3.16E+02	3.16E+02	3.16E+02	3.16E+02	3.16E+02	3.16E+02	3.16E+02	3.16E+02	3.16E+02
U-234 Y	4.89E+02	4.89E+02	4.89E+02	4.89E+02	4.89E+02	4.89E+02	4.89E+02	4.89E+02	4.89E+02	4.89E+02
U-234 W	4.89E+02	4.89E+02	4.89E+02	4.89E+02	4.89E+02	4.89E+02	4.89E+02	4.89E+02	4.89E+02	4.89E+02
U-234 D	4.89E+02	4.89E+02	4.89E+02	4.89E+02	4.89E+02	4.89E+02	4.89E+02	4.89E+02	4.89E+02	4.89E+02
U-235 Y	7.46E+05	7.46E+05	7.46E+05	7.46E+05	7.46E+05	7.46E+05	7.46E+05	7.46E+05	7.46E+05	7.46E+05
U-235 W	7.46E+05	7.46E+05	7.46E+05	7.46E+05	7.46E+05	7.46E+05	7.46E+05	7.46E+05	7.46E+05	7.46E+05
U-235 D	7.46E+05	7.46E+05	7.46E+05	7.46E+05	7.46E+05	7.46E+05	7.46E+05	7.46E+05	7.46E+05	7.46E+05
U-236 Y	2.62E+02	2.62E+02	2.62E+02	2.62E+02	2.62E+02	2.62E+02	2.62E+02	2.62E+02	2.62E+02	2.62E+02
U-236 W	2.62E+02	2.62E+02	2.62E+02	2.62E+02	2.62E+02	2.62E+02	2.62E+02	2.62E+02	2.62E+02	2.62E+02
U-236 D	2.62E+02	2.62E+02	2.62E+02	2.62E+02	2.62E+02	2.62E+02	2.62E+02	2.62E+02	2.62E+02	2.62E+02
U-238 Y	6.55E+04	6.55E+04	6.55E+04	6.55E+04	6.55E+04	6.55E+04	6.55E+04	6.55E+04	6.55E+04	6.55E+04
U-238 W	6.55E+04	6.55E+04	6.55E+04	6.55E+04	6.55E+04	6.55E+04	6.55E+04	6.55E+04	6.55E+04	6.55E+04
U-238 D	6.55E+04	6.55E+04	6.55E+04	6.55E+04	6.55E+04	6.55E+04	6.55E+04	6.55E+04	6.55E+04	6.55E+04
Np-237 Y	1.10E+06	1.10E+06	1.10E+06	1.10E+06	1.10E+06	1.10E+06	1.10E+06	1.10E+06	1.10E+06	1.10E+06
Np-237 W	1.10E+06	1.10E+06	1.10E+06	1.10E+06	1.10E+06	1.10E+06	1.10E+06	1.10E+06	1.10E+06	1.10E+06
Pu-236 Y	1.46E+02	1.46E+02	1.46E+02	1.46E+02	1.46E+02	1.46E+02	1.46E+02	1.46E+02	1.46E+02	1.46E+02
Pu-236 W	1.46E+02	1.46E+02	1.46E+02	1.46E+02	1.46E+02	1.46E+02	1.46E+02	1.46E+02	1.46E+02	1.46E+02
Pu-238 Y	1.09E+02	1.09E+02	1.09E+02	1.09E+02	1.09E+02	1.09E+02	1.09E+02	1.09E+02	1.09E+02	1.09E+02
Pu-238 W	1.09E+02	1.09E+02	1.09E+02	1.09E+02	1.09E+02	1.09E+02	1.09E+02	1.09E+02	1.09E+02	1.09E+02
Pu-239 Y	0.00E+00	0.00E+00	0.00E+00	0.00E+00	0.00E+00	0.00E+00	0.00E+00	0.00E+00	0.00E+00	0.00E+00
Pu-239 W	0.00E+00	0.00E+00	0.00E+00	0.00E+00	0.00E+00	0.00E+00	0.00E+00	0.00E+00	0.00E+00	0.00E+00
Pu-240 Y	1.32E+02	1.32E+02	1.32E+02	1.32E+02	1.32E+02	1.32E+02	1.32E+02	1.32E+02	1.32E+02	1.32E+02
Pu-240 W	1.32E+02	1.32E+02	1.32E+02	1.32E+02	1.32E+02	1.32E+02	1.32E+02	1.32E+02	1.32E+02	1.32E+02
Pu-241 Y	1.37E+00	1.37E+00	1.37E+00	1.37E+00	1.37E+00	1.37E+00	1.37E+00	1.37E+00	1.37E+00	1.37E+00
Pu-241 W	1.37E+00	1.37E+00	1.37E+00	1.37E+00	1.37E+00	1.37E+00	1.37E+00	1.37E+00	1.37E+00	1.37E+00
Pu-242 Y	1.29E+02	1.29E+02	1.29E+02	1.29E+02	1.29E+02	1.29E+02	1.29E+02	1.29E+02	1.29E+02	1.29E+02
Pu-242 W	1.29E+02	1.29E+02	1.29E+02	1.29E+02	1.29E+02	1.29E+02	1.29E+02	1.29E+02	1.29E+02	1.29E+02
Pu-244 Y	1.62E+06	1.62E+06	1.62E+06	1.62E+06	1.62E+06	1.62E+06	1.62E+06	1.62E+06	1.62E+06	1.62E+06
Pu-244 W	1.62E+06	1.62E+06	1.62E+06	1.62E+06	1.62E+06	1.62E+06	1.62E+06	1.62E+06	1.62E+06	1.62E+06
Am-241 Y	7.65E+04	7.65E+04	7.65E+04	7.65E+04	7.65E+04	7.65E+04	7.65E+04	7.65E+04	7.65E+04	7.65E+04
Am-241 W	7.65E+04	7.65E+04	7.65E+04	7.65E+04	7.65E+04	7.65E+04	7.65E+04	7.65E+04	7.65E+04	7.65E+04
Am-243 Y	9.41E+05	9.41E+05	9.41E+05	9.41E+05	9.41E+05	9.41E+05	9.41E+05	9.41E+05	9.41E+05	9.41E+05
Am-243 W	9.41E+05	9.41E+05	9.41E+05	9.41E+05	9.41E+05	9.41E+05	9.41E+05	9.41E+05	9.41E+05	9.41E+05
Cm-242 Y	4.81E+02	4.81E+02	4.81E+02	4.81E+02	4.81E+02	4.81E+02	4.81E+02	4.81E+02	4.81E+02	4.81E+02
Cm-242 W	4.81E+02	4.81E+02	4.81E+02	4.81E+02	4.81E+02	4.81E+02	4.81E+02	4.81E+02	4.81E+02	4.81E+02
Cm-243 Y	5.55E+05	5.55E+05	5.55E+05	5.55E+05	5.55E+05	5.55E+05	5.55E+05	5.55E+05	5.55E+05	5.55E+05
Cm-243 W	5.55E+05	5.55E+05	5.55E+05	5.55E+05	5.55E+05	5.55E+05	5.55E+05	5.55E+05	5.55E+05	5.55E+05
Cm-244 Y	5.94E+01	5.94E+01	5.94E+01	5.94E+01	5.94E+01	5.94E+01	5.94E+01	5.94E+01	5.94E+01	5.94E+01
Cm-244 W	5.94E+01	5.94E+01	5.94E+01	5.94E+01	5.94E+01	5.94E+01	5.94E+01	5.94E+01	5.94E+01	5.94E+01
Cm-248 Y	0.00E+00	0.00E+00	0.00E+00	0.00E+00	0.00E+00	0.00E+00	0.00E+00	0.00E+00	0.00E+00	0.00E+00
Cm-248 W	0.00E+00	0.00E+00	0.00E+00	0.00E+00	0.00E+00	0.00E+00	0.00E+00	0.00E+00	0.00E+00	0.00E+00
Cf-252 Y	1.36E+04	1.36E+04	1.36E+04	1.36E+04	1.36E+04	1.36E+04	1.36E+04	1.36E+04	1.36E+04	1.36E+04
Cf-252 W	1.36E+04	1.36E+04	1.36E+04	1.36E+04	1.36E+04	1.36E+04	1.36E+04	1.36E+04	1.36E+04	1.36E+04

000439

TABLE D-22 . PDCF-6: PDCF for Well Water Pathways

Nuclide and Solubility		Lung	Stomach Wall	LLI Wall	Total Body	Kidneys	Liver	Red Marrow	Bone	Thyroid	ICRP
H-3	*	3.18E+06	4.11E+06	5.44E+06	3.16E+06	3.25E+06	3.15E+06	3.14E+06	2.49E+06	3.15E+06	3.41E+06
C-14	*	4.68E+07	6.67E+07	8.05E+07	1.06E+08	5.84E+07	6.78E+07	1.86E+08	3.89E+08	4.90E+07	8.49E+07
Na-22	D	4.69E+08	2.20E+08	2.69E+08	2.80E+08	2.96E+08	2.79E+08	3.71E+08	4.65E+08	2.67E+08	3.57E+08
P-32	D	9.50E+07	7.02E+07	5.73E+08	1.10E+08	9.38E+07	9.41E+07	3.46E+08	6.32E+08	9.41E+07	1.76E+08
P-32	W	9.50E+07	7.02E+07	5.73E+08	1.10E+08	9.38E+07	9.41E+07	3.46E+08	6.32E+08	9.41E+07	1.76E+08
P-33	D	8.12E+06	1.58E+07	7.33E+07	2.60E+07	8.12E+06	8.12E+06	4.33E+07	1.14E+08	8.12E+06	2.15E+07
P-33	W	8.12E+06	1.58E+07	7.33E+07	2.60E+07	8.12E+06	8.12E+06	4.33E+07	1.14E+08	8.12E+06	2.15E+07
S-35	D	6.86E+06	1.20E+07	5.13E+07	1.09E+07	6.86E+06	6.86E+06	1.86E+03	6.86E+06	6.86E+06	1.09E+07
S-35	W	6.86E+06	1.20E+07	5.13E+07	1.09E+07	6.86E+06	6.86E+06	1.86E+03	6.86E+06	6.86E+06	1.09E+07
Cl-36	D	2.38E+08	3.30E+08	2.38E+08	2.46E+08	2.38E+08	2.38E+08	2.38E+08	2.38E+08	2.38E+08	2.44E+08
Cl-36	W	2.38E+08	3.30E+08	2.38E+08	2.46E+08	2.38E+08	2.38E+08	2.38E+08	2.38E+08	2.38E+08	2.44E+08
Ca-45	W	1.09E+06	2.90E+06	5.71E+07	2.35E+07	1.09E+06	1.09E+06	7.02E+07	1.06E+08	1.09E+06	1.73E+07
Sc-46	Y	5.65E+07	6.53E+07	2.64E+08	9.08E+07	6.06E+07	5.61E+07	6.44E+07	6.28E+07	6.98E+07	9.22E+07
Cr-51	D	1.02E+06	1.20E+06	5.55E+06	1.72E+06	1.06E+06	9.97E+05	1.20E+06	1.34E+06	1.26E+06	1.68E+06
Cr-51	W	1.02E+06	1.20E+06	5.55E+06	1.72E+06	1.06E+06	9.97E+05	1.20E+06	1.34E+06	1.26E+06	1.68E+06
Cr-51	Y	1.02E+06	1.20E+06	5.55E+06	1.72E+06	1.06E+06	9.97E+05	1.20E+06	1.34E+06	1.26E+06	1.68E+06
Mn-54	D	3.45E+07	2.88E+07	5.81E+07	3.12E+07	3.03E+07	3.92E+07	3.24E+07	3.26E+07	3.23E+07	3.93E+07
Mn-54	W	3.45E+07	2.88E+07	5.81E+07	3.12E+07	3.03E+07	3.92E+07	3.24E+07	3.26E+07	3.23E+07	3.93E+07
Fe-55	W	4.16E+06	1.08E+05	4.15E+06	2.06E+06	3.77E+06	7.15E+06	3.76E+06	2.56E+06	3.70E+06	4.57E+06
Fe-55	Y	4.16E+06	1.08E+05	4.15E+06	2.06E+06	3.77E+06	7.15E+06	3.76E+06	2.56E+06	3.70E+06	4.57E+06
Fe-59	W	6.70E+07	4.85E+07	2.06E+08	5.08E+07	5.50E+07	6.27E+07	5.34E+07	5.20E+07	5.38E+07	7.78E+07
Fe-59	Y	6.70E+07	4.85E+07	2.06E+08	5.08E+07	5.50E+07	6.27E+07	5.34E+07	5.20E+07	5.38E+07	7.78E+07
Co-57	W	5.26E+06	4.81E+06	2.70E+07	5.05E+06	4.49E+06	4.67E+06	5.09E+06	6.89E+06	5.73E+06	8.15E+06
Co-57	Y	5.26E+06	4.81E+06	2.70E+07	5.05E+06	4.49E+06	4.67E+06	5.09E+06	6.89E+06	5.73E+06	8.15E+06
Co-58	W	3.35E+07	3.30E+07	1.01E+08	3.38E+07	3.16E+07	3.03E+07	3.36E+07	3.37E+07	3.63E+07	4.60E+07
Co-58	Y	3.35E+07	3.30E+07	1.01E+08	3.38E+07	3.16E+07	3.03E+07	3.36E+07	3.37E+07	3.63E+07	4.60E+07
Co-60	W	1.10E+08	8.79E+07	2.70E+08	9.18E+07	9.44E+07	9.72E+07	9.40E+07	9.04E+07	8.29E+07	1.28E+08
Co-60	Y	1.10E+08	8.79E+07	2.70E+08	9.18E+07	9.44E+07	9.72E+07	9.40E+07	9.04E+07	8.29E+07	1.28E+08
Ni-59	D	5.73E+05	6.69E+05	4.39E+06	9.33E+05	5.81E+05	5.81E+05	5.94E+05	5.91E+05	6.34E+05	9.33E+05
Ni-59	W	5.73E+05	6.69E+05	4.39E+06	9.33E+05	5.81E+05	5.81E+05	5.94E+05	5.91E+05	6.34E+05	9.33E+05
Ni-63	D	1.39E+06	1.71E+06	1.50E+07	2.54E+06	1.39E+06	1.39E+06	1.39E+06	1.39E+06	1.39E+06	2.54E+06
Ni-63	W	1.39E+06	1.71E+06	1.50E+07	2.54E+06	1.39E+06	1.39E+06	1.39E+06	1.39E+06	1.39E+06	2.54E+06
Zn-65	D	5.39E+08	2.08E+08	2.92E+08	2.49E+08	3.27E+08	3.22E+08	3.34E+08	3.08E+08	2.26E+08	3.72E+08
Zn-65	W	5.39E+08	2.08E+08	2.92E+08	2.49E+08	3.27E+08	3.22E+08	3.34E+08	3.08E+08	2.26E+08	3.72E+08
Zn-65	Y	5.39E+08	2.08E+08	2.92E+08	2.49E+08	3.27E+08	3.22E+08	3.34E+08	2.93E+09	2.26E+08	3.72E+08
Se-75	D	9.33E+07	1.18E+08	1.07E+08	1.48E+08	3.64E+08	2.93E+08	1.13E+08	9.98E+07	7.08E+07	1.40E+08
Se-75	W	9.33E+07	1.18E+08	1.07E+08	1.48E+08	3.64E+08	2.93E+08	1.13E+08	9.98E+07	7.08E+07	1.40E+08
Rb-86	D	1.28E+08	2.61E+07	4.89E+07	7.48E+07	1.24E+08	1.24E+08	1.24E+08	1.23E+08	1.24E+08	1.26E+08
Sr-85	D	1.82E+07	1.88E+07	3.84E+07	2.44E+07	1.87E+07	1.75E+07	2.52E+07	2.74E+07	2.18E+07	2.42E+07
Sr-85	Y	1.51E+07	1.65E+07	4.37E+07	2.16E+07	1.57E+07	1.48E+07	1.73E+07	1.83E+07	1.85E+07	2.20E+07
Sr-89	D	3.87E+06	1.13E+07	3.92E+08	8.15E+06	3.87E+06	3.87E+06	2.37E+07	4.89E+07	3.87E+06	4.01E+07
Sr-89	Y	2.04E+05	1.13E+07	4.98E+08	2.21E+06	1.97E+05	1.97E+05	1.18E+06	2.44E+06	1.98E+05	4.15E+07
Sr-90	D	2.71E+07	3.96E+06	3.52E+08	4.28E+08	2.71E+07	2.58E+07	1.95E+09	3.89E+09	2.71E+07	3.96E+08
Sr-90	Y	1.54E+06	3.96E+06	4.34E+08	2.27E+07	1.36E+06	1.29E+06	9.73E+07	1.95E+08	1.36E+06	5.12E+07
Zr-95	W	2.59E+07	2.92E+07	1.93E+08	2.80E+07	2.51E+07	2.33E+07	2.74E+07	2.81E+07	2.93E+07	4.73E+07
Zr-95	Y	2.59E+07	2.92E+07	1.93E+08	2.80E+07	2.51E+07	2.33E+07	2.74E+07	2.81E+07	2.93E+07	4.73E+07
Nb-94	W	6.45E+07	1.29E+08	1.45E+09	2.66E+08	1.23E+08	7.39E+07	1.29E+08	1.36E+08	7.09E+07	2.66E+08
Nb-94	Y	6.46E+07	1.29E+08	1.45E+09	2.66E+08	1.23E+08	7.39E+07	1.29E+08	1.36E+08	7.09E+07	2.66E+08
Nb-95	Y	3.80E+07	5.18E+07	4.65E+08	3.89E+07	3.69E+07	3.03E+07	4.30E+07	3.43E+07	2.93E+07	1.02E+08
Mo-99	D	1.11E+07	1.49E+07	1.93E+07	1.11E+07	7.69E+07	1.26E+08	1.06E+07	1.51E+07	8.53E+06	2.20E+07
Mo-99	Y	5.43E+06	1.44E+07	2.73E+08	6.82E+06	8.62E+06	1.08E+07	5.86E+06	6.08E+06	6.44E+06	3.16E+07
Tc-99	D	3.89E+06	1.14E+07	3.93E+07	2.63E+06	5.62E+06	7.71E+06	3.95E+06	5.03E+06	1.73E+08	1.25E+07
Tc-99	W	3.89E+06	1.14E+07	3.93E+07	2.63E+06	5.62E+06	7.71E+06	3.95E+06	5.03E+06	1.73E+08	1.25E+07
Tc-99m	D	4.41E+06	5.05E+06	4.47E+06	4.41E+06	3.85E+06	3.85E+06	3.83E+06	6.23E+06	8.01E+06	4.93E+06
Tc-99m	W	4.41E+06	5.05E+06	4.47E+06	4.41E+06	3.85E+06	3.85E+06	3.83E+06	6.23E+06	8.01E+06	4.93E+06
Ru-103	Y	4.29E+07	5.57E+07	1.03E+09	3.75E+07	3.60E+07	3.29E+07	4.20E+07	3.33E+07	2.82E+07	1.47E+08
Ru-106	Y	3.66E+08	2.77E+08	1.10E+10	2.58E+08	3.55E+08	3.56E+08	3.58E+08	4.12E+08	3.49E+08	1.23E+09
Ag-108	D	6.32E+07	7.13E+07	2.48E+08	1.06E+08	7.44E+07	2.28E+08	6.57E+07	6.36E+07	6.28E+07	1.06E+08
Ag-108	W	5.32E+07	7.13E+07	2.48E+08	1.06E+08	7.44E+07	2.28E+08	6.57E+07	6.36E+07	6.28E+07	1.06E+08
Ag-108	Y	6.32E+07	7.13E+07	2.48E+08	1.06E+08	7.44E+07	2.28E+08	6.57E+07	6.36E+07	6.28E+07	1.06E+08
Ag-110	D	9.96E+07	1.12E+08	3.59E+08	1.60E+08	1.17E+08	3.03E+08	1.04E+08	9.83E+07	1.02E+08	1.60E+08
Ag-110	W	9.96E+07	1.12E+08	3.59E+08	1.60E+08	1.17E+08	3.03E+08	1.04E+08	9.83E+07	1.02E+08	1.60E+08
Ag-110	Y	9.96E+07	1.12E+08	3.59E+08	1.60E+08	1.17E+08	3.03E+08	1.04E+08	9.83E+07	1.02E+08	1.60E+08
Cd-109	D	6.38E+06	8.17E+06	9.19E+07	9.80E+07	8.11E+08	1.47E+08	7.39E+06	6.66E+06	5.67E+06	7.05E+07
Cd-109	W	6.38E+06	8.17E+06	9.19E+07	9.80E+07	8.11E+08	1.47E+08	7.39E+06	6.66E+06	5.67E+06	7.05E+07
Cd-109	Y	6.38E+06	8.17E+06	9.19E+07	9.80E+07	8.11E+08	1.47E+08	7.39E+06	6.66E+06	5.67E+06	7.05E+07
Sn-113	D	8.88E+06	1.34E+07	3.54E+08	4.50E+07	1.00E+07	9.06E+06	1.57E+07	1.99E+07	1.08E+07	4.50E+07
Sn-113	W	8.88E+06	1.34E+07	3.54E+08	4.50E+07	1.00E+07	9.06E+06	1.57E+07	1.99E+07	1.08E+07	4.50E+07
Sn-126	D	1.53E+08	1.87E+08	2.01E+09	3.66E+08	1.60E+08	1.48E+08	2.48E+08	3.66E+08	1.83E+08	3.66E+08
Sn-126	W	1.53E+08	1.87E+08	2.01E+09	3.66E+08	1.60E+08	1.48E+08	2.48E+08	3.66E+08	1.83E+08	3.66E+08
Sb-124	D	5.30E+07	6.39E+07	3.97E+08	9.72E+07	5.60E+07	5.82E+07	6.14E+07	6.83E+07	6.42E+07	9.72E+07
Sb-124	W	5.12E+07	6.20E+07	4.30E+08	9.85E+07	5.42E+07	5.10E+07	5.75E+07	5.82E+07	6.25E+07	9.85E+07
Sb-125	D	1.36E+07	1.64E+07	1.06E+08	2.65E+07	1.44E+07	1.58E+07	1.64E+07	2.47E+07	1.69E+07	2.65E+07
Sb-125	W	1.28E+07	1.58E+07	1.15E+08	2.65E+07	1.37E+07	1.27E+07	1.46E+07	1.66E+07	1.62E+07	2.65E+07
I-125	D	1.23E+06	1.71E+06	8.57E+05	3.25E+08	1.18E+06	8.88E+05	1.59E+06	2.03E+06	7.38E+09	2.24E+08
I-129	D	5.11E+06	7.07E+05	6.05E+05	1.91E+07	4.65E+06	4.48E+06	5.60E+06	5.71E+06	4.53E+10	1.36E+09
I-131	D	1.37E+07	1.12E+07	1.06E+07	1.79E+07	1.25E+07	1.21E+07	1.34E+07	1.63E+07	1.05E+10	3.29E+08
Cs-134	D	1.03E+09	3.49E+08	3.95E+08	4.70E+08	6.61E+08	6.59E+08	6.17E+08	5.97E+08	5.38E+08	7.39E+08
Cs-135	D	6.91E+07	1.48E+06	3.30E+06	4.08E+07	6.91E+07	6.91E+07	6.91E+07	8.02E+07	6.97E+07	6.97E+07
Cs-136	D	1.93E+08	1.08E+08	1.17E+08	1.21E+08	1.41E+08	1.41E+08	1.35E+08	1.35E+08	1.36E+08	1.52E+08

TABLE D-22 . PDCF-6 (Continued)

Nuclide and Solubility	Lung	Stomach Wall	LLI Wall	Total Body	Kidneys	Liver	Red Marrow	Bone	Thyroid	ICRP
Cs-137 D	6.34E+08	1.50E+08	1.75E+08	3.21E+08	4.94E+08	5.02E+08	4.73E+08	5.13E+08	4.36E+08	5.24E+08
Ba-140 D	9.21E+06	1.36E+07	4.09E+08	1.04E+07	7.81E+06	7.00E+06	1.10E+07	1.17E+07	8.55E+06	4.51E+07
La-140 W	6.47E+07	7.27E+07	3.22E+08	6.90E+07	6.42E+07	6.01E+07	6.60E+07	6.75E+07	7.52E+07	9.96E+07
Ce-141 Y	2.47E+06	5.43E+06	1.33E+08	3.23E+06	2.35E+06	2.22E+06	2.54E+06	3.71E+06	3.16E+06	1.45E+07
Ce-141 W	2.47E+06	5.43E+06	1.33E+08	3.23E+06	2.35E+06	2.22E+06	2.54E+06	3.71E+06	3.16E+06	1.45E+07
Ce-141 D	2.47E+06	5.43E+06	1.33E+08	3.23E+06	2.35E+06	2.22E+06	2.54E+06	3.71E+06	3.16E+06	1.45E+07
Ce-144 Y	1.78E+06	9.87E+06	1.78E+08	3.07E+06	2.10E+06	1.77E+06	1.96E+06	2.73E+06	2.19E+06	8.81E+07
Ce-144 W	1.74E+06	9.87E+06	1.78E+08	3.07E+06	2.10E+06	1.79E+06	1.96E+06	2.73E+06	2.19E+06	8.81E+07
Ce-144 D	1.72E+06	9.87E+06	1.78E+08	3.07E+06	2.12E+06	1.85E+06	1.96E+06	2.74E+06	2.19E+06	8.81E+07
Eu-152 W	3.54E+07	3.95E+07	1.94E+08	6.26E+07	3.89E+07	7.91E+07	4.65E+07	7.04E+07	4.11E+07	6.26E+07
Eu-154 W	3.78E+07	4.52E+07	3.30E+08	7.96E+07	4.13E+07	9.35E+07	5.36E+07	1.12E+08	4.42E+07	7.96E+07
Yb-169 W	9.04E+06	1.21E+07	1.23E+08	2.40E+07	9.60E+06	8.70E+06	9.80E+06	1.56E+07	1.30E+07	2.26E+07
Yb-169 Y	9.04E+06	1.21E+07	1.23E+08	2.40E+07	9.60E+06	8.70E+06	9.80E+06	1.56E+07	1.30E+07	2.26E+07
Pb-210 W	1.23E+09	8.36E+05	8.34E+07	6.98E+09	3.86E+09	5.75E+09	4.11E+09	3.94E+10	1.23E+09	3.19E+09
Po-210 W	2.30E+09	2.01E+07	7.98E+08	1.82E+09	4.12E+10	7.09E+09	2.39E+09	1.06E+09	2.30E+09	9.04E+09
Po-210 D	2.30E+09	2.01E+07	7.98E+08	1.82E+09	4.12E+10	7.09E+09	2.39E+09	1.06E+09	2.30E+09	9.04E+09
Rn-222 •	1.23E+08	1.13E+08	1.12E+08	1.31E+08	1.22E+08	1.16E+08	1.24E+08	1.36E+08	1.52E+08	1.31E+08
Ra-226 W	2.59E+09	1.36E+08	1.49E+09	1.43E+10	2.59E+09	2.58E+09	9.32E+09	8.37E+10	2.62E+09	5.90E+09
Ra-228 W	1.74E+09	3.37E+07	3.22E+08	7.13E+09	1.70E+09	1.70E+09	5.46E+09	4.10E+10	1.70E+09	3.32E+09
Ac-227 Y	1.11E+09	1.55E+07	2.54E+08	1.27E+10	1.96E+10	1.56E+11	9.78E+10	9.78E+11	1.09E+09	5.40E+10
Ac-227 W	1.09E+09	1.55E+07	2.54E+08	1.27E+10	1.96E+10	1.57E+11	9.78E+10	9.78E+11	1.09E+09	5.40E+10
Th-228 Y	1.43E+08	1.10E+08	1.99E+09	2.57E+08	1.30E+08	1.87E+08	1.64E+09	1.67E+10	1.46E+08	9.55E+08
Th-228 W	1.30E+08	1.10E+08	1.99E+09	2.57E+08	1.30E+08	1.87E+08	1.64E+09	1.67E+10	1.46E+08	9.54E+08
Th-229 Y	1.32E+08	7.84E+07	9.07E+08	1.00E+09	1.01E+08	2.08E+08	1.06E+10	1.30E+11	1.18E+08	5.30E+09
Th-229 W	1.08E+08	7.84E+07	9.07E+08	1.00E+09	1.01E+08	2.08E+08	1.06E+10	1.30E+11	1.18E+08	5.30E+09
Th-230 Y	3.00E+07	1.63E+07	7.28E+08	3.75E+08	1.75E+07	8.83E+07	4.05E+09	6.48E+10	1.85E+07	2.55E+09
Th-230 W	1.96E+07	1.63E+07	7.28E+08	3.75E+08	1.75E+07	8.85E+07	4.06E+09	6.49E+10	1.85E+07	2.55E+09
Th-232 Y	2.60E+07	1.40E+07	6.07E+08	3.90E+08	1.52E+07	7.62E+07	4.45E+09	7.29E+10	1.60E+07	2.80E+09
Th-232 W	1.71E+07	1.40E+07	6.07E+08	3.91E+08	1.52E+07	7.63E+07	4.46E+09	7.30E+10	1.60E+07	2.81E+09
Pa-231 Y	2.59E+09	5.58E+07	2.22E+09	2.46E+10	4.21E+10	3.28E+11	1.75E+11	2.08E+12	2.57E+09	1.12E+11
Pa-231 W	2.58E+09	5.58E+07	2.22E+09	2.46E+10	4.21E+10	3.28E+11	1.75E+11	2.08E+12	2.57E+09	1.12E+11
U-232 Y	2.48E+07	1.92E+07	8.24E+08	3.47E+08	5.36E+08	4.84E+06	2.93E+09	3.21E+10	5.04E+06	1.43E+09
U-232 W	1.35E+08	2.65E+07	8.24E+08	8.65E+09	1.36E+10	1.18E+08	7.41E+10	8.03E+11	1.24E+08	3.37E+10
U-232 D	1.33E+08	2.65E+07	8.24E+08	8.65E+09	1.36E+10	1.18E+08	7.41E+10	8.03E+11	1.24E+08	3.37E+10
U-233 Y	1.48E+07	1.72E+07	7.41E+08	9.92E+07	2.79E+08	2.50E+06	3.96E+07	5.77E+08	2.64E+06	1.07E+08
U-233 W	7.29E+07	2.27E+07	7.00E+08	2.39E+09	7.00E+09	6.22E+07	9.89E+08	1.44E+10	6.59E+07	1.08E+09
U-233 D	7.17E+07	2.27E+07	7.00E+08	2.39E+09	7.00E+09	6.22E+07	9.89E+08	1.44E+10	6.59E+07	1.08E+09
U-234 Y	1.46E+07	1.72E+07	7.41E+08	9.84E+07	2.76E+08	2.61E+06	3.85E+07	5.77E+08	2.61E+06	1.06E+08
U-234 W	7.21E+07	2.26E+07	7.00E+08	2.39E+09	7.00E+09	6.51E+07	9.47E+08	1.44E+10	6.51E+07	1.06E+09
U-234 D	7.09E+07	2.26E+07	7.00E+08	2.39E+09	7.00E+09	6.51E+07	9.47E+08	1.44E+10	6.51E+07	1.06E+09
U-235 Y	1.85E+07	2.10E+07	7.87E+08	9.48E+07	2.54E+08	6.92E+06	3.49E+07	5.02E+08	8.97E+06	1.08E+08
U-235 W	7.27E+07	2.65E+07	7.46E+08	2.15E+09	6.18E+09	6.13E+07	7.46E+08	1.20E+10	6.63E+07	9.28E+08
U-235 D	7.16E+07	2.65E+07	7.46E+08	2.15E+09	6.18E+09	6.13E+07	7.46E+08	1.20E+10	6.63E+07	9.28E+08
U-236 Y	1.38E+07	1.61E+07	7.00E+08	9.26E+07	2.60E+08	2.45E+06	3.31E+07	5.36E+08	2.46E+06	9.91E+07
U-236 W	6.79E+07	2.13E+07	6.59E+08	2.22E+09	6.59E+09	6.14E+07	8.24E+08	1.28E+10	6.14E+07	9.76E+08
U-236 D	6.68E+07	2.13E+07	6.59E+08	2.22E+09	6.59E+09	6.14E+07	8.24E+08	1.28E+10	6.14E+07	9.76E+08
U-238 Y	6.88E+07	6.67E+07	7.51E+08	1.47E+08	3.00E+08	5.44E+07	8.73E+07	5.17E+08	7.29E+07	1.54E+08
U-238 W	1.20E+08	7.16E+07	7.10E+08	2.16E+09	6.23E+09	1.07E+08	8.38E+08	1.16E+10	1.29E+08	9.66E+08
U-238 D	1.19E+08	7.16E+07	7.10E+08	2.16E+09	6.23E+09	1.07E+08	8.38E+08	1.16E+10	1.29E+08	9.66E+08
Np-237 Y	5.31E+08	2.86E+07	8.58E+08	4.27E+09	8.95E+09	6.82E+10	2.60E+10	3.71E+11	5.21E+08	2.00E+10
Np-237 W	5.19E+08	2.86E+07	8.58E+08	4.27E+09	8.96E+09	6.82E+10	2.60E+10	3.71E+11	5.21E+08	2.00E+10
Pu-236 Y	1.13E+07	2.01E+07	8.91E+08	1.84E+07	3.31E+07	2.55E+08	8.46E+07	9.76E+08	1.57E+06	1.36E+08
Pu-236 W	2.96E+06	2.01E+07	8.91E+08	1.85E+07	3.36E+07	2.60E+08	8.60E+07	9.92E+08	1.59E+06	1.35E+08
Pu-238 Y	2.64E+07	1.91E+07	8.50E+08	1.16E+08	2.34E+08	1.80E+09	6.94E+08	8.57E+09	1.32E+07	5.61E+08
Pu-238 W	1.45E+07	1.91E+07	8.50E+08	1.17E+08	2.37E+08	1.82E+09	7.03E+08	8.69E+09	1.34E+07	5.65E+08
Pu-239 Y	2.74E+07	1.79E+07	8.10E+08	1.28E+08	2.59E+08	2.00E+09	7.76E+08	1.06E+10	1.48E+07	6.43E+08
Pu-239 W	1.60E+07	1.79E+07	8.10E+08	1.29E+08	2.62E+08	2.03E+09	7.86E+08	1.08E+10	1.50E+07	6.48E+08
Pu-240 Y	2.74E+07	1.79E+07	8.10E+08	1.28E+08	2.58E+08	2.00E+09	7.76E+08	1.06E+10	1.48E+07	6.43E+08
Pu-240 W	1.60E+07	1.79E+07	8.10E+08	1.28E+08	2.61E+08	2.03E+09	7.86E+08	1.08E+10	1.50E+07	6.48E+08
Pu-241 Y	3.28E+05	9.03E+04	4.02E+06	2.53E+06	5.03E+06	3.88E+07	1.58E+07	1.97E+08	3.07E+05	1.14E+07
Pu-241 W	3.04E+05	9.03E+04	4.02E+06	2.56E+06	5.09E+06	3.93E+07	1.60E+07	2.00E+08	3.10E+05	1.15E+07
Pu-242 Y	2.60E+07	1.70E+07	7.69E+08	1.22E+08	2.45E+08	1.92E+09	7.35E+08	1.06E+10	1.41E+07	6.27E+08
Pu-242 W	1.52E+07	1.70E+07	7.69E+08	1.23E+08	2.49E+08	1.94E+09	7.44E+08	1.08E+10	1.43E+07	6.32E+08
Pu-244 Y	3.64E+07	2.76E+07	1.22E+09	1.33E+08	2.54E+08	1.89E+09	7.04E+08	1.06E+10	2.58E+07	6.73E+08
Pu-244 W	2.56E+07	2.76E+07	1.22E+09	1.35E+08	2.57E+08	1.91E+09	7.13E+08	1.08E+10	2.60E+07	6.78E+08
Am-241 Y	5.43E+08	2.19E+07	9.26E+08	4.41E+09	9.70E+09	7.49E+10	2.82E+10	3.53E+11	5.30E+08	2.02E+10
Am-241 W	5.31E+08	2.19E+07	9.26E+08	4.41E+09	9.70E+09	7.49E+10	2.82E+10	3.53E+11	5.30E+08	2.02E+10
Am-243 Y	5.92E+08	2.93E+07	9.75E+08	4.41E+09	9.70E+09	7.49E+10	2.82E+10	3.75E+11	5.82E+08	2.09E+10
Am-243 W	5.81E+08	2.93E+07	9.75E+08	4.42E+09	9.70E+09	7.49E+10	2.82E+10	3.75E+11	5.82E+08	2.09E+10
Cm-242 Y	1.48E+07	2.12E+07	9.29E+08	1.04E+08	2.31E+08	1.78E+09	5.66E+08	6.06E+09	1.10E+07	4.77E+08
Cm-242 W	1.22E+07	2.12E+07	9.29E+08	1.04E+08	2.31E+08	1.78E+09	5.66E+08	6.06E+09	1.10E+07	4.77E+08
Cm-243 Y	3.53E+08	2.73E+07	1.01E+09	2.87E+09	6.06E+09	4.85E+10	1.70E+10	1.94E+11	3.37E+08	1.18E+10
Cm-243 W	3.41E+08	2.73E+07	1.01E+09	2.87E+09	6.07E+09	4.85E+10	1.70E+10	1.94E+11	3.37E+08	1.18E+10
Cm-244 Y	2.72E+08	2.00E+07	8.89E+08	2.26E+09	4.85E+09	3.76E+10	1.33E+10	1.54E+11	2.59E+08	9.34E+09
Cm-244 W	2.60E+08	2.00E+07	8.89E+08	2.26E+09	4.85E+09	3.76E+10	1.33E+10	1.54E+11	2.59E+08	9.34E+09
Cm-248 Y	2.39E+09	3.15E+08	4.44E+09	1.62E+10	3.27E+10	2.55E+11	2.46E+10	3.56E+11	1.94E+09	3.52E+10
Cm-248 W	2.35E+09	3.15E+08	4.44E+09	1.62E+10	3.27E+10	2.55E+11	2.47E+10	3.56E+11	1.94E+09	3.52E+10
Cf-252 Y	1.52E+08	8.48E+07	2.30E+09	9.29E+08	2.10E+09	1.62E+10	2.63E+09	2.79E+10	1.01E+08	2.69E+09
Cf-252 W	1.35E+08	8.48E+07	2.30E+09	9.29E+08	2.10E+09	1.62E+10	2.63E+09	2.79E+10	1.01E+08	2.69E+09

000441

TABLE D-23 . PDCF-7: PDCF for Surface Water Pathways

Nuclide and Solubility		Lung	Stomach Wall	LLI Wall	Total Body	Kidneys	Liver	Red Marrow	Bone	Thyroid	ICRP
H-3	*	3.18E+06	4.11E+06	5.44E+06	3.16E+06	3.26E+06	3.15E+06	3.14E+06	2.49E+06	3.15E+06	3.42E+06
C-14	*	8.15E+07	1.16E+08	1.40E+08	1.84E+08	1.02E+08	1.18E+08	3.24E+08	6.77E+08	8.53E+07	1.48E+08
Na-22	D	4.92E+08	2.30E+08	2.81E+08	2.92E+08	3.09E+08	2.91E+08	3.89E+08	4.87E+08	2.78E+08	3.74E+08
P-32	D	2.98E+09	2.20E+09	1.80E+10	3.45E+09	2.94E+09	2.95E+09	1.09E+10	1.98E+10	2.95E+09	5.51E+09
P-32	W	2.98E+09	2.20E+09	1.80E+10	3.45E+09	2.94E+09	2.95E+09	1.09E+10	1.98E+10	2.95E+09	5.51E+09
P-33	D	2.54E+08	4.94E+08	2.30E+09	8.14E+08	2.54E+08	2.54E+08	1.36E+09	3.58E+09	2.54E+08	6.73E+08
P-33	W	2.54E+08	4.94E+08	2.30E+09	8.14E+08	2.54E+08	2.54E+08	1.36E+09	3.58E+09	2.54E+08	6.73E+08
S-35	D	8.34E+06	1.46E+07	6.24E+07	1.32E+07	8.34E+06	8.34E+06	2.26E+03	8.34E+06	8.34E+06	1.33E+07
S-35	W	8.34E+06	1.46E+07	6.24E+07	1.32E+07	8.34E+06	8.34E+06	2.26E+03	8.34E+06	8.34E+06	1.33E+07
Cl-36	D	2.39E+08	3.32E+08	2.39E+08	2.47E+08	2.39E+08	2.39E+08	2.39E+08	2.39E+08	2.39E+08	2.45E+08
Cl-36	W	2.39E+08	3.32E+08	2.39E+08	2.47E+08	2.39E+08	2.39E+08	2.39E+08	2.39E+08	2.39E+08	2.45E+08
Ca-45	W	1.21E+06	3.22E+06	6.34E+07	2.61E+07	1.21E+06	1.21E+06	7.80E+07	1.18E+08	1.21E+06	1.93E+07
Sc-46	Y	5.66E+07	6.79E+07	3.03E+08	9.66E+07	6.17E+07	5.68E+07	6.59E+07	6.33E+07	6.98E+07	9.87E+07
Cr-51	D	1.07E+06	1.42E+06	8.65E+06	2.19E+06	1.16E+06	1.08E+06	1.36E+06	1.44E+06	1.30E+06	2.13E+06
Cr-51	W	1.07E+06	1.42E+06	8.65E+06	2.19E+06	1.16E+06	1.08E+06	1.36E+06	1.44E+06	1.30E+06	2.13E+06
Cr-51	Y	1.07E+06	1.42E+06	8.65E+06	2.19E+06	1.16E+06	1.08E+06	1.36E+06	1.44E+06	1.30E+06	2.13E+06
Mn-54	D	2.50E+08	1.62E+08	7.99E+08	1.45E+08	1.66E+08	3.81E+08	1.96E+08	1.59E+08	7.54E+07	3.18E+08
Mn-54	W	2.50E+08	1.62E+08	7.99E+08	1.45E+08	1.66E+08	3.81E+08	1.96E+08	1.59E+08	7.54E+07	3.18E+08
Fe-55	W	6.92E+06	1.80E+05	6.90E+06	3.42E+06	6.28E+06	1.19E+07	6.25E+06	4.26E+06	6.16E+06	7.60E+06
Fe-55	Y	6.92E+06	1.80E+05	6.90E+06	3.42E+06	6.28E+06	1.19E+07	6.25E+06	4.26E+06	6.16E+06	7.60E+06
Fe-59	W	9.07E+07	6.15E+07	3.23E+08	6.22E+07	7.07E+07	8.47E+07	6.77E+07	6.40E+07	6.34E+07	1.07E+08
Fe-59	Y	9.07E+07	6.15E+07	3.23E+08	6.22E+07	7.07E+07	8.47E+07	6.77E+07	6.40E+07	6.34E+07	1.07E+08
Co-57	W	5.42E+06	4.96E+06	2.95E+07	5.15E+06	4.61E+06	4.81E+06	5.28E+06	6.99E+06	5.79E+06	8.57E+06
Co-57	Y	5.43E+06	4.96E+06	2.95E+07	5.15E+06	4.61E+06	4.81E+06	5.28E+06	6.99E+06	5.79E+06	8.57E+06
Co-58	W	3.41E+07	3.37E+07	1.09E+08	3.43E+07	3.21E+07	3.07E+07	3.41E+07	3.39E+07	3.64E+07	4.77E+07
Co-58	Y	3.41E+07	3.37E+07	1.09E+08	3.43E+07	3.21E+07	3.07E+07	3.41E+07	3.39E+07	3.64E+07	4.77E+07
Co-60	W	1.15E+08	9.08E+07	2.91E+08	9.42E+07	9.75E+07	1.01E+08	9.70E+07	9.26E+07	8.30E+07	1.34E+08
Co-60	Y	1.15E+08	9.08E+07	2.91E+08	9.42E+07	9.75E+07	1.01E+08	9.70E+07	9.26E+07	8.30E+07	1.34E+08
Ni-59	D	6.75E+05	7.89E+05	5.18E+06	1.10E+06	6.85E+05	6.85E+05	7.01E+05	6.97E+05	7.48E+05	1.10E+06
Ni-59	W	6.75E+05	7.89E+05	5.18E+06	1.10E+06	6.85E+05	6.85E+05	7.01E+05	6.96E+05	7.48E+05	1.10E+06
Ni-63	D	1.63E+06	2.02E+06	1.76E+07	2.99E+06	1.63E+06	1.63E+06	1.63E+06	1.63E+06	1.63E+06	2.99E+06
Ni-63	W	1.63E+06	2.02E+06	1.76E+07	2.99E+06	1.63E+06	1.63E+06	1.63E+06	1.63E+06	1.63E+06	2.99E+06
Zn-65	D	1.21E+09	4.58E+08	6.52E+08	5.49E+08	7.29E+08	7.20E+08	7.46E+08	6.84E+08	4.93E+08	8.31E+08
Zn-65	W	1.21E+09	4.58E+08	6.52E+08	5.49E+08	7.29E+08	7.20E+08	7.46E+08	6.84E+08	4.93E+08	8.31E+08
Zn-65	Y	1.21E+09	4.58E+08	6.52E+08	5.49E+08	7.29E+08	7.20E+08	7.46E+08	6.69E+09	4.93E+08	8.31E+08
Se-75	D	1.02E+08	1.29E+08	1.17E+08	1.62E+08	3.99E+08	3.21E+08	1.24E+08	1.08E+08	7.64E+07	1.53E+08
Se-75	W	1.02E+08	1.29E+08	1.17E+08	1.62E+08	3.99E+08	3.21E+08	1.24E+08	1.08E+08	7.64E+07	1.53E+08
Rb-86	D	3.85E+08	7.48E+07	1.45E+08	2.23E+08	3.74E+08	3.74E+08	3.72E+08	3.70E+08	3.71E+08	3.79E+08
Sr-85	D	1.85E+07	1.91E+07	4.01E+07	2.50E+07	1.90E+07	1.77E+07	2.58E+07	2.81E+07	2.20E+07	2.48E+07
Sr-85	Y	1.51E+07	1.67E+07	4.58E+07	2.19E+07	1.58E+07	1.48E+07	1.75E+07	1.83E+07	1.85E+07	2.25E+07
Sr-89	D	4.13E+06	1.20E+07	4.19E+08	8.70E+06	4.13E+06	4.13E+06	2.53E+07	5.22E+07	4.14E+06	4.29E+07
Sr-89	Y	2.17E+05	1.20E+07	5.31E+08	2.36E+06	2.11E+05	2.10E+05	1.26E+06	2.60E+06	2.11E+05	4.43E+07
Sr-90	D	2.89E+07	4.23E+06	3.76E+08	4.57E+08	2.89E+07	2.76E+07	2.08E+09	4.15E+09	2.89E+07	4.23E+08
Sr-90	Y	1.64E+06	4.23E+06	4.64E+08	2.43E+07	1.45E+06	1.38E+06	1.04E+08	2.08E+08	1.45E+06	5.46E+07
Zr-95	W	2.59E+07	2.92E+07	1.94E+08	2.80E+07	2.51E+07	2.33E+07	2.74E+07	2.81E+07	2.93E+07	4.74E+07
Zr-95	Y	2.59E+07	2.92E+07	1.94E+08	2.80E+07	2.51E+07	2.33E+07	2.74E+07	2.81E+07	2.93E+07	4.74E+07
Nb-94	W	1.96E+08	7.19E+08	1.10E+10	1.74E+09	6.55E+08	2.89E+08	6.95E+08	7.23E+08	1.65E+08	1.74E+09
Nb-94	Y	1.96E+08	7.19E+08	1.10E+10	1.74E+09	6.55E+08	2.89E+08	6.95E+08	7.23E+08	1.65E+08	1.74E+09
Nb-95	Y	1.46E+08	2.65E+08	3.49E+09	1.43E+08	1.40E+08	9.60E+07	1.83E+08	1.01E+08	3.90E+07	6.36E+08
Mo-99	D	1.12E+07	1.51E+07	1.95E+07	1.12E+07	7.80E+07	1.28E+08	1.07E+07	1.53E+07	8.57E+06	2.22E+07
Mo-99	Y	5.44E+06	1.45E+07	2.77E+08	6.85E+06	8.68E+06	1.09E+07	5.88E+06	6.10E+06	6.45E+06	3.20E+07
Tc-99	D	3.93E+06	1.15E+07	3.96E+07	2.65E+06	5.67E+06	7.78E+06	3.99E+06	5.08E+06	1.75E+08	1.26E+07
Tc-99	W	3.93E+06	1.15E+07	3.96E+07	2.65E+06	5.67E+06	7.78E+06	3.99E+06	5.08E+06	1.75E+08	1.26E+07
Tc-99m	D	4.41E+06	5.06E+06	4.48E+06	4.41E+06	3.85E+06	3.86E+06	3.84E+06	6.23E+06	8.03E+06	4.94E+06
Tc-99m	W	4.41E+06	5.06E+06	4.48E+06	4.41E+06	3.85E+06	3.86E+06	3.84E+06	6.23E+06	8.03E+06	4.94E+06
Ru-103	Y	4.31E+07	5.60E+07	1.04E+09	3.77E+07	3.62E+07	3.31E+07	4.22E+07	3.34E+07	2.83E+07	1.48E+08
Ru-106	Y	3.70E+08	2.79E+08	1.11E+10	2.60E+08	3.58E+08	3.59E+08	3.61E+08	4.16E+08	3.52E+08	1.24E+09
Ag-108	D	6.49E+07	7.44E+07	2.70E+08	1.12E+08	7.75E+07	2.48E+08	6.77E+07	6.47E+07	6.32E+07	1.12E+08
Ag-108	W	6.49E+07	7.44E+07	2.70E+08	1.12E+08	7.75E+07	2.48E+08	6.77E+07	6.47E+07	6.32E+07	1.12E+08
Ag-108	Y	6.50E+07	7.44E+07	2.70E+08	1.12E+08	7.75E+07	2.48E+08	6.77E+07	6.47E+07	6.32E+07	1.12E+08
Ag-110	D	1.02E+08	1.16E+08	3.91E+08	1.69E+08	1.21E+08	3.28E+08	1.06E+08	9.97E+07	1.02E+08	1.69E+08
Ag-110	W	1.02E+08	1.16E+08	3.91E+08	1.69E+08	1.21E+08	3.28E+08	1.06E+08	9.97E+07	1.02E+08	1.69E+08
Ag-110	Y	1.02E+08	1.16E+08	3.91E+08	1.69E+08	1.21E+08	3.28E+08	1.06E+08	9.97E+07	1.02E+08	1.69E+08
Cd-109	D	1.03E+07	1.33E+07	1.50E+08	1.60E+08	1.32E+09	2.39E+08	1.20E+07	1.07E+07	9.12E+06	1.15E+08
Cd-109	W	1.03E+07	1.33E+07	1.50E+08	1.60E+08	1.32E+09	2.39E+08	1.20E+07	1.07E+07	9.12E+06	1.15E+08
Cd-109	Y	1.03E+07	1.33E+07	1.50E+08	1.60E+08	1.32E+09	2.39E+08	1.20E+07	1.07E+07	9.12E+06	1.15E+08
Sn-113	D	1.09E+07	2.48E+07	9.89E+08	1.12E+08	1.44E+07	1.26E+07	3.00E+07	3.86E+07	1.26E+07	1.12E+08
Sn-113	W	1.09E+07	2.48E+07	9.89E+08	1.12E+08	1.44E+07	1.26E+07	3.00E+07	3.86E+07	1.26E+07	1.12E+08
Sn-126	D	2.01E+08	3.16E+08	5.48E+09	7.89E+08	2.26E+08	2.03E+08	4.67E+08	7.72E+08	2.28E+08	7.89E+08
Sn-126	W	2.01E+08	3.16E+08	5.48E+09	7.89E+08	2.26E+08	2.03E+08	4.67E+08	7.72E+08	2.28E+08	7.89E+08
Sb-124	D	5.30E+07	6.39E+07	3.98E+08	9.73E+07	5.60E+07	5.82E+07	6.15E+07	6.84E+07	6.42E+07	9.73E+07
Sb-124	W	5.12E+07	6.21E+07	4.31E+08	9.86E+07	5.42E+07	5.10E+07	5.76E+07	5.83E+07	6.25E+07	9.86E+07
Sb-125	D	1.36E+07	1.65E+07	1.07E+08	2.65E+07	1.44E+07	1.58E+07	1.64E+07	2.48E+07	1.69E+07	2.65E+07
Sb-125	W	1.28E+07	1.58E+07	1.15E+08	2.65E+07	1.37E+07	1.27E+07	1.46E+07	1.66E+07	1.62E+07	2.65E+07
I-125	D	1.24E+06	1.74E+06	8.69E+05	3.31E+08	1.19E+06	9.00E+05	1.62E+06	2.06E+06	7.51E+09	2.28E+08
I-129	D	5.20E+06	7.16E+05	6.12E+05	1.95E+07	4.72E+06	4.55E+06	5.70E+06	5.80E+06	4.61E+10	1.38E+09
I-131	D	1.37E+07	1.12E+07	1.06E+07	1.80E+07	1.26E+07	1.21E+07	1.34E+07	1.63E+07	1.07E+10	3.35E+08
Cs-134	D	3.26E+09	1.04E+09	1.19E+09	1.42E+09	2.05E+09	2.05E+09	1.90E+09	1.83E+09	1.62E+09	2.30E+09
Cs-135	D	2.25E+08	4.82E+06	1.07E+07	1.33E+08	2.25E+08	2.25E+08	2.25E+08	2.61E+08	2.27E+08	2.27E+08
Cs-136	D	4.90E+08	2.25E+08	2.58E+08	2.46E+08	3.25E+08	3.30E+08	3.02E+08	2.85E+08	2.69E+08	3.48E+08

TABLE D-23 . PDCF-7 (Continued)

Nuclide and Solubility	Lung	Stomach Wall	LLI Wall	Total Body	Kidneys	Liver	Red Marrow	Bone	Thyroid	ICRP
Cs-137 D	2.02E+09	4.54E+08	5.35E+08	1.00E+09	1.57E+09	1.60E+09	1.50E+09	1.62E+09	1.37E+09	1.66E+09
Ba-140 D	9.42E+06	1.40E+07	4.32E+08	1.07E+07	7.95E+06	7.10E+06	1.13E+07	1.20E+07	8.64E+06	4.73E+07
La-140 W	6.58E+07	7.75E+07	3.99E+08	7.02E+07	6.52E+07	6.08E+07	6.72E+07	6.79E+07	7.52E+07	1.10E+08
Ce-141 Y	2.52E+06	6.25E+06	1.65E+08	3.40E+06	2.40E+06	2.27E+06	2.67E+06	3.75E+06	3.17E+06	1.74E+07
Ce-141 W	2.52E+06	6.25E+06	1.65E+08	3.40E+06	2.40E+06	2.27E+06	2.67E+06	3.75E+06	3.17E+06	1.74E+07
Ce-141 D	2.52E+06	6.25E+06	1.65E+08	3.40E+06	2.40E+06	2.27E+06	2.67E+06	3.75E+06	3.17E+06	1.74E+07
Ce-144 Y	1.82E+06	1.19E+07	2.21E+08	3.37E+06	2.20E+06	1.85E+06	2.09E+06	2.88E+06	2.20E+06	1.09E+08
Ce-144 W	1.77E+06	1.19E+07	2.21E+08	3.37E+06	2.21E+06	1.86E+06	2.10E+06	2.88E+06	2.20E+06	1.09E+08
Ce-144 D	1.76E+06	1.19E+07	2.21E+08	3.38E+06	2.23E+06	1.92E+06	2.10E+06	2.89E+06	2.20E+06	1.09E+08
Eu-152 W	3.64E+07	4.23E+07	2.38E+08	7.02E+07	4.09E+07	9.22E+07	5.05E+07	7.95E+07	4.14E+07	7.02E+07
Eu-154 W	3.87E+07	4.88E+07	4.08E+08	9.08E+07	4.32E+07	1.10E+08	5.86E+07	1.32E+08	4.44E+07	9.08E+07
Yb-169 W	9.06E+06	1.32E+07	1.54E+08	2.77E+07	9.81E+06	8.85E+06	1.05E+07	1.60E+07	1.30E+07	2.61E+07
Yb-169 Y	9.07E+06	1.32E+07	1.54E+08	2.77E+07	9.81E+06	8.85E+06	1.05E+07	1.60E+07	1.30E+07	2.61E+07
Pb-210 W	1.47E+09	9.90E+05	9.94E+07	8.32E+09	4.60E+09	6.85E+09	4.90E+09	4.70E+10	1.47E+09	3.80E+09
Po-210 W	1.45E+10	1.27E+08	5.02E+09	1.14E+10	2.59E+11	4.46E+10	1.51E+10	6.69E+09	1.45E+10	5.69E+10
Po-210 D	1.45E+10	1.27E+08	5.02E+09	1.14E+10	2.59E+11	4.46E+10	1.51E+10	6.69E+09	1.45E+10	5.69E+10
Rn-222 *	1.23E+08	1.13E+08	1.12E+08	1.31E+08	1.22E+08	1.16E+08	1.24E+08	1.36E+08	1.52E+08	1.31E+08
Ra-226 W	2.94E+09	1.39E+08	1.69E+09	1.64E+10	2.94E+09	2.93E+09	1.06E+10	9.56E+10	2.97E+09	6.72E+09
Ra-228 W	1.98E+09	3.51E+07	3.64E+08	8.14E+09	1.93E+09	1.93E+09	6.23E+09	4.68E+10	1.94E+09	3.79E+09
Ac-227 Y	1.24E+09	1.60E+07	2.83E+08	1.43E+10	2.19E+10	1.75E+11	1.10E+11	1.10E+12	1.22E+09	6.05E+10
Ac-227 W	1.22E+09	1.60E+07	2.83E+08	1.43E+10	2.19E+10	1.75E+11	1.10E+11	1.10E+12	1.22E+09	6.05E+10
Th-228 Y	1.48E+08	1.14E+08	2.32E+09	2.84E+08	1.35E+08	2.03E+08	1.90E+09	1.96E+10	1.52E+08	1.10E+09
Th-228 W	1.35E+08	1.14E+08	2.32E+09	2.84E+08	1.36E+08	2.03E+08	1.91E+09	1.96E+10	1.52E+08	1.10E+09
Th-229 Y	1.39E+08	8.19E+07	1.06E+09	1.16E+09	1.08E+08	2.33E+08	1.24E+10	1.52E+11	1.25E+08	6.21E+09
Th-229 W	1.15E+08	8.19E+07	1.06E+09	1.16E+09	1.08E+08	2.33E+08	1.25E+10	1.53E+11	1.25E+08	6.22E+09
Th-230 Y	3.32E+07	1.92E+07	8.55E+08	4.40E+08	2.05E+07	1.04E+08	4.76E+09	7.61E+10	2.17E+07	2.99E+09
Th-230 W	2.29E+07	1.92E+07	8.55E+08	4.40E+08	2.05E+07	1.04E+08	4.77E+09	7.62E+10	2.17E+07	3.00E+09
Th-232 Y	2.88E+07	1.65E+07	7.13E+08	4.58E+08	1.78E+07	8.94E+07	5.23E+09	8.56E+10	1.88E+07	3.29E+09
Th-232 W	1.99E+07	1.65E+07	7.13E+08	4.59E+08	1.79E+07	8.96E+07	5.24E+09	8.58E+10	1.88E+07	3.30E+09
Pa-231 Y	2.63E+09	5.66E+07	2.26E+09	2.50E+10	4.28E+10	3.33E+11	1.78E+11	2.12E+12	2.62E+09	1.13E+11
Pa-231 W	2.63E+09	5.66E+07	2.26E+09	2.50E+10	4.28E+10	3.33E+11	1.78E+11	2.12E+12	2.62E+09	1.13E+11
U-232 Y	2.49E+07	1.95E+07	8.39E+08	3.53E+08	5.45E+08	4.93E+06	2.98E+09	3.27E+10	5.13E+06	1.45E+09
U-232 W	1.37E+08	2.69E+07	8.39E+08	8.81E+09	1.38E+10	1.20E+08	7.55E+10	8.18E+11	1.27E+08	3.43E+10
U-232 D	1.36E+08	2.69E+07	8.39E+08	8.81E+09	1.38E+10	1.20E+08	7.55E+10	8.18E+11	1.27E+08	3.43E+10
U-233 Y	1.48E+07	1.75E+07	7.55E+08	1.01E+08	2.84E+08	2.55E+06	4.03E+07	5.87E+08	2.69E+06	1.09E+08
U-233 W	7.42E+07	2.31E+07	7.13E+08	2.43E+09	7.13E+09	6.33E+07	1.01E+09	1.47E+10	6.71E+07	1.09E+09
U-233 D	7.30E+07	2.31E+07	7.13E+08	2.43E+09	7.13E+09	6.33E+07	1.01E+09	1.47E+10	6.71E+07	1.09E+09
U-234 Y	1.46E+07	1.75E+07	7.55E+08	1.00E+08	2.81E+08	2.65E+06	3.92E+07	5.87E+08	2.66E+06	1.08E+08
U-234 W	7.33E+07	2.30E+07	7.13E+08	2.43E+09	7.13E+09	6.63E+07	9.64E+08	1.47E+10	6.63E+07	1.08E+09
U-234 D	7.21E+07	2.30E+07	7.13E+08	2.43E+09	7.13E+09	6.63E+07	9.64E+08	1.47E+10	6.63E+07	1.08E+09
U-235 Y	1.86E+07	2.13E+07	8.01E+08	9.64E+07	2.58E+08	6.97E+06	3.55E+07	5.10E+08	9.01E+06	1.10E+08
U-235 W	7.39E+07	2.69E+07	7.59E+08	2.19E+09	6.29E+09	6.23E+07	7.59E+08	1.22E+10	6.74E+07	9.45E+08
U-235 D	7.28E+07	2.69E+07	7.59E+08	2.19E+09	6.29E+09	6.23E+07	7.59E+08	1.22E+10	6.74E+07	9.45E+08
U-236 Y	1.38E+07	1.64E+07	7.13E+08	9.43E+07	2.65E+08	2.50E+06	3.37E+07	5.45E+08	2.50E+06	1.01E+08
U-236 W	6.91E+07	2.16E+07	6.71E+08	2.26E+09	6.71E+09	6.25E+07	8.39E+08	1.30E+10	6.25E+07	9.94E+08
U-236 D	6.79E+07	2.16E+07	6.71E+08	2.26E+09	6.71E+09	6.25E+07	8.39E+08	1.30E+10	6.25E+07	9.94E+08
U-238 Y	6.89E+07	6.70E+07	7.63E+08	1.49E+08	3.05E+08	5.45E+07	8.79E+07	5.25E+08	7.30E+07	1.56E+08
U-238 W	1.21E+08	7.19E+07	7.21E+08	2.20E+09	6.34E+09	1.08E+08	8.52E+08	1.18E+10	1.30E+08	9.82E+08
U-238 D	1.20E+08	7.19E+07	7.21E+08	2.20E+09	6.34E+09	1.08E+08	8.52E+08	1.18E+10	1.30E+08	9.82E+08
Np-237 Y	5.87E+08	3.11E+07	9.52E+08	4.74E+09	9.94E+09	7.57E+10	2.89E+10	4.11E+11	5.77E+08	2.22E+10
Np-237 W	5.76E+08	3.11E+07	9.52E+08	4.74E+09	9.94E+09	7.57E+10	2.89E+10	4.12E+11	5.77E+08	2.22E+10
Pu-236 Y	1.14E+07	2.14E+07	9.51E+08	1.96E+07	3.53E+07	2.72E+08	9.03E+07	1.04E+09	1.67E+06	1.45E+08
Pu-236 W	3.07E+06	2.14E+07	9.51E+08	1.97E+07	3.58E+07	2.77E+08	9.16E+07	1.06E+09	1.70E+06	1.44E+08
Pu-238 Y	2.73E+07	2.04E+07	9.07E+08	1.24E+08	2.49E+08	1.92E+09	7.40E+08	9.15E+09	1.41E+07	5.99E+08
Pu-238 W	1.54E+07	2.04E+07	9.07E+08	1.25E+08	2.52E+08	1.94E+09	7.49E+08	9.26E+09	1.42E+07	6.03E+08
Pu-239 Y	2.84E+07	1.91E+07	8.64E+08	1.37E+08	2.76E+08	2.13E+09	8.28E+08	1.13E+10	1.58E+07	6.86E+08
Pu-239 W	1.70E+07	1.91E+07	8.64E+08	1.38E+08	2.79E+08	2.16E+09	8.38E+08	1.15E+10	1.60E+07	6.91E+08
Pu-240 Y	2.83E+07	1.91E+07	8.64E+08	1.37E+08	2.75E+08	2.13E+09	8.28E+08	1.13E+10	1.58E+07	6.86E+08
Pu-240 W	1.70E+07	1.91E+07	8.64E+08	1.37E+08	2.79E+08	2.16E+09	8.37E+08	1.15E+10	1.60E+07	6.91E+08
Pu-241 Y	3.49E+05	9.64E+04	4.29E+06	2.70E+06	5.36E+06	4.14E+07	1.68E+07	2.11E+08	3.27E+05	1.22E+07
Pu-241 W	3.25E+05	9.64E+04	4.29E+06	2.73E+06	5.42E+06	4.19E+07	1.70E+07	2.13E+08	3.30E+05	1.23E+07
Pu-242 Y	2.70E+07	1.82E+07	8.21E+08	1.30E+08	2.62E+08	2.05E+09	7.84E+08	1.13E+10	1.50E+07	6.68E+08
Pu-242 W	1.62E+07	1.82E+07	8.21E+08	1.31E+08	2.65E+08	2.07E+09	7.93E+08	1.15E+10	1.52E+07	6.73E+08
Pu-244 Y	3.74E+07	2.89E+07	1.30E+09	1.42E+08	2.71E+08	2.01E+09	7.50E+08	1.13E+10	2.67E+07	7.17E+08
Pu-244 W	2.66E+07	2.89E+07	1.30E+09	1.43E+08	2.74E+08	2.04E+09	7.59E+08	1.15E+10	2.69E+07	7.22E+08
Am-241 Y	8.70E+08	3.51E+07	1.50E+09	7.13E+09	1.57E+10	1.21E+11	4.56E+10	5.71E+11	8.57E+08	3.27E+10
Am-241 W	8.58E+08	3.51E+07	1.50E+09	7.13E+09	1.57E+10	1.21E+11	4.57E+10	5.71E+11	8.57E+08	3.27E+10
Am-243 Y	9.47E+08	4.39E+07	1.57E+09	7.14E+09	1.57E+10	1.21E+11	4.56E+10	6.06E+11	9.36E+08	3.37E+10
Am-243 W	9.35E+08	4.39E+07	1.57E+09	7.14E+09	1.57E+10	1.21E+11	4.57E+10	6.06E+11	9.36E+08	3.37E+10
Cm-242 Y	1.80E+07	2.74E+07	1.20E+09	1.35E+08	2.98E+08	2.29E+09	7.30E+08	7.82E+09	1.42E+07	6.16E+08
Cm-242 W	1.54E+07	2.74E+07	1.20E+09	1.35E+08	2.98E+08	2.29E+09	7.30E+08	7.82E+09	1.42E+07	6.15E+08
Cm-243 Y	4.50E+08	3.42E+07	1.31E+09	3.71E+09	7.82E+09	6.26E+10	2.19E+10	2.50E+11	4.34E+08	1.52E+10
Cm-243 W	4.38E+08	3.42E+07	1.31E+09	3.71E+09	7.83E+09	6.26E+10	2.19E+10	2.50E+11	4.34E+08	1.52E+10
Cm-244 Y	3.47E+08	2.59E+07	1.15E+09	2.92E+09	6.26E+09	4.85E+10	1.72E+10	1.98E+11	3.34E+08	1.20E+10
Cm-244 W	3.35E+08	2.59E+07	1.15E+09	2.92E+09	6.26E+09	4.85E+10	1.72E+10	1.98E+11	3.34E+08	1.20E+10
Cm-248 Y	3.07E+09	4.07E+08	5.73E+09	2.09E+10	4.22E+10	3.28E+11	3.18E+10	4.59E+11	2.50E+09	4.54E+10
Cm-248 W	3.03E+09	4.07E+08	5.73E+09	2.09E+10	4.22E+10	3.29E+11	3.18E+10	4.59E+11	2.50E+09	4.54E+10
Cf-252 Y	1.90E+08	1.09E+08	2.97E+09	1.20E+09	2.71E+09	2.09E+10	3.39E+09	3.60E+10	1.31E+08	3.47E+09
Cf-252 W	1.74E+08	1.09E+08	2.97E+09	1.20E+09	2.71E+09	2.09E+10	3.39E+09	3.60E+10	1.31E+08	3.47E+09

000443

REFERENCES

(1) U.S. Nuclear Regulatory Commission, "Calculation of Annual Doses to Man from Routine Releases of Reactor Effluents for the Purpose of Evaluating Compliance with 10 CFR Part 50, Appendix I," Draft Regulatory Guide 1.109, Office of Standards Development, March 1976.

(2) U.S. Nuclear Regulatory Commission, "Calculation of Annual Doses to Man from Routine Releases of Reactor Effluents for the Purpose of Evaluating Compliance with 10 CFR Part 50, Appendix I," Regulatory Guide 1.109, Office of Standards Development, Revision 1, October, 1977.

(3) Adams, N., B.W. Hunt, and J.A. Reissland, "Annual Limits of Intake of Radionuclides for Workers," National Radiation Protection Board Report, NRPB-R82, October 1978.

(4) Dunning, D.E., Jr., G.G. Killough, S.R. Bernard, J.C. Pleasant, and P.J. Walsh, "Estimates of Internal Dose Equivalent to 22 Target Organs for Radionuclides Occurring in Routine Releases from Nuclear Fuel Cycle Facilities, Volume III," NUREG/CR-0150 (ORNL/NUREG/TM-190/V3), Oak Ridge National Laboratory for U.S. Nuclear Regulatory Commission, October 1981.

(5) Eckerman, K.F., M.R. Ford, and S.B. Watson, "Internal Dosimetry Data and Methods of ICRP-Part 2, Vol. 1: Committed Dose Equivalent and Secondary Limits," NUREG/CR-1962 (ORNL/NUREG/TM-433), Oak Ridge National Laboratory for U.S. Nuclear Regulatory Commission, February 1981.

(6) Personal Communication from Keith Eckerman, Oak Ridge National Laboratory, to G.W. Roles, U.S. Nuclear Regulatory Commission, January 1983.

(7) International Commission on Radiological Protection (ICRP), "Limits for Intakes of Radionuclides by Workers, Part 1," ICRP Publication 30, July 1978.

(8) "Task Group on Lung Dynamics for Committee II of the International Commission on Radiological Protection," Health Physics, 12, 173, 1966.

(9) Bech, H. and G. de Planque, "The Radiation Field In Air Due to Distributed Gamma Ray Sources in the Ground," U.S. Atomic Energy Commission, Health and Safety Laboratory Report No. HASL-195, 1968.

(10) Lederer, C.M., J.M. Hollander, and I. Perlman, "Table of Isotopes," Sixth Edition, John Wiley and Sons, Inc., New York, 1967.

(11) Kocher, D.C., "Dose-Rate Conversion Factors for External Exposure to Photons and Electrons," NUREG/CR-1918 (ORNL/NUREG-79), Oak Ridge National Laboratory for U.S. Nuclear Regulatory Commission, August 1981.

(12) U.S. Nuclear Regulatory Commission, "Calculational Models for Estimating Radiation Doses to Man from Airborne Radioactive Materials Resulting from Uranium Milling Operations," Regulatory Guide 3.51 (Task RH 802-4), Office of Standards Development, February 1982.

(13) Moore, R.E., et al., "AIRDOS-EPA: A Computerized Methodology for Estimating Environmental Concentrations and Dose to Man from Airborne Releases of Radionuclides," EPA 520/1-79-009, December 1979.

(14) Ng, Y.C., C.S. Colsher, and S.E. Thompson, "Soil-to-Plant Concentration Factors for Radiological Assessments," NUREG/CR-2975 (UCID-19463), Lawrence Livermore National Laboratory for U.S. Nuclear Regulatory Commission, November 1982.

(15) Healy, J.W. and J.C. Rodgers, "Limits for the Department of Energy Transuranic Wastes," Los Alamos Scientific Laboratory, LA-UR-79-100, January 1979.

(16) Oztunali, O.I., K.D. Petschek, and L. Skoski, "Report on the Reexamination of C-14 and I-129 Radiotoxicity," Dames and Moore, June 1982.

(17) Ng, Y.C., C.S. Colsher, and S.E. Thompson, "Transfer Coefficients for Assessing the Dose from Radionuclides in Meat and Eggs," NUREG/CR-2976 (UCID-19464), Lawrence Livermore National Laboratory for U.S. Nuclear Regulatory Commission, November 1982.

(18) Ng, Y.C., C.S. Colsher, and S.E. Thompson, "Transfer Factors for Assessing the Dose from Radionuclides in Agricultural Products," from International Symposium on Biological Implications of Radionuclides Released from Nuclear Industries, IAEA-SM-237/54, Vienna, March 26-30, 1979.

(19) Ng, Y.C., et al., "Transfer Coefficients for the Prediction of the Dose to Man via the Forage-Cow-Milk Pathway from Radionuclides Released to the Biosphere," University of California, Lawrence Livermore Laboratory Report No. UCRL-51939.

(20) Denham, D.H., et al., "Radiological Evaluation for Advanced Waste Management Studies," Battelle Pacific Northwest Laboratories Report No. BNWL-1764, 1973.

(21) U.S. Nuclear Regulatory Commission, "A Methodology for Calculating Residual Radioactivity Levels Following Decommissioning," NUREG-0707, Office of Standards Development, October 1980.

(22) International Commission on Radiological Protection (ICRP), "Report of the Task Group on Reference Man," ICRP Publication 23, 1974.

(23) U.S. Nuclear Regulatory Commission, "Final Environmental Impact Statement on 10 CFR Part 61: Licensing Requirements for Land Disposal of Radioactive Waste," NUREG-0945, Office of Nuclear Material Safety and Safeguards, November 1982.

000445

APPENDIX E

VOLUME AND RADIONUCLIDE PROJECTIONS OF PWR SECONDARY COOLANT SYSTEM RESINS AND FILTER MEDIA

Low-Level Waste Licensing Branch
Division of Waste Management
U.S. Nuclear Regulatory Commission

February 1983

VOLUME AND RADIONUCLIDE PROJECTIONS OF PWR SECONDARY COOLANT SYSTEM RESINS AND FILTER MEDIA

Many of the nuclear power stations currently in operation use pressurized water reactor (PWR) steam supply systems, as do a number of stations either under construction or planned. About half of these PWR stations are equipped with condensate polishing systems on their secondary coolant systems. Operating the condensating polishing systems will generate relatively small volumes of waste ion-exchange resins and filter media. These secondary coolant system waste steams are good candidates for disposal by less restrictive means, since the radionuclide content of the waste will be low, and the physical and chemical characteristics of the waste are relatively easy to characterize (e.g., the waste will be typically homogeneously contaminated rather than containing localized hot spots).

The purpose of this paper is to provide an estimate of the volumes and radiological contents of spent secondary coolant system ion-exchange resins and filter media. The volume projections are made in a similar manner as waste projections for the draft and final environmental impact statements (EIS) for regulation of low-level waste disposal (10 CFR Part 61) (Refs. 1, 2), and cover the time period from 1980 to the year 2000.

Volume Projections

As part of developing the Part 61 regulation for low-level radioactive waste disposal, NRC staff developed volume projections of the different types and forms of low-level waste expected to be routinely generated from 1980 through the year 2000. These projections have been published as Appendix A to Reference 3, and form the basis for the volume projections made in this paper. In Appendix A, the volumes of the different types of waste generated by nuclear power stations were taken as multiples of electrical capacity. For example, the PWR ion-exchange resin waste generation rate was estimated to be about 0.94 ft^3/MW(e)-yr for plants with no condensate polishing systems (CPS) and about 0.32 ft^3/MW(e)-yr for plants with CPS (Ref. 3).

Projections of power generation rates for nuclear power were made in Appendix A on the basis of a review of nuclear power stations currently built and operable, under construction, or planned or on order. Two scenarios were assumed for nuclear power station construction:

(1) A "low scenario," which assumed that construction continued on power stations which were already under construction but that any additional construction essentially ceased until at least the late 1980's; and

(2) A "high scenario," which assumed that construction commences on a number of additional plants, including those units planned as of December 31, 1979 as well as plants for which construction had been deferred indefinitely.

These assumptions resulted in a total projected capacity by the year 2000 of 146,333 MW(e) for the low scenario and 169,141 MW(e) for the high scenario (Ref. 3). The high scenario was assumed for purposes of calculating impacts for waste disposal in the Part 61 EIS (Refs. 1, 2).

Since the projections were made in Appendix A, however, a number of plants have been canceled, including several which were already under construction. In other instances, construction has been deferred. Thus, an updated projection of electrical capacity is needed.

Table 1 lists by NRC region the nuclear power stations assumed to be operable in 1980, and is an update of Table 4 in Appendix A of Reference 3. The capacities and startup dates were obtained principally from Reference 4. Table 2 is a listing by NRC region of nuclear power stations currently under construction and for which an expected startup date has been listed in Reference 5. Table 2 is essentially an update of Table 5 in Appendix A of Reference 3. (The projected startup dates shown in Table 2 are those provided by Reference 5 while the capacities remain those given in Reference 4.)

Reference 5 also lists 11 other nuclear power stations as having "indefinite" startup times, and these 11 stations are listed in Table 3. The startup dates for these units, which is believed to be problematical for some of them, are difficult to project. For example, the construction pace on Cherokee 1 was slowed by the utility, Duke Power Company, in February 1981. Two other units--Cherokee 2 and Cherokee 3--were later canceled (Ref. 6). The Portland General Electric Company has deferred pursuit of construction permits for the two units at Pebble Springs (Ref. 7). Construction at WNP 1, which is about 63% complete, has been suspended, although completion of this unit is still viable (Ref. 7).

Perhaps the most problematical units in Table 3 are the four being constructed by the Tennessee Valley Authority (TVA)--i.e., the two Hartsville and the two Yellow Creek units. Four other units under construction by TVA have been recently canceled, and there is considerable speculation that the Hartsville and Yellow Creek units will also be canceled. In any case, work on these four units has been halted (Refs. 7, 8, 9).

For the purposes of developing waste projections, the units listed as operable in Table 1 are assumed to operate (and generate waste) throughout the year 2000 at the listed electrical capacity. Additional units are assumed to come on line as projected in Table 2 and also operate through the year 2000. Units listed in Table 3 are also assumed to come on line as shown. These assumed startup times in Table 3 are little more than educated guesses, and have been included solely to ensure a conservative source term. Two of the 11 units listed in Table 3 are assumed to be canceled prior to completion, and are assumed to consist of one boiling water reactor and one pressurized water reactor. For convenience, both units are assumed to be TVA plants, although any of the 11 units in Table 3 could have been chosen for this purpose. (The assumption of cancellation is done solely for purposes of generating a source term, and does <u>not</u> constitute an official NRC staff acceptance of cancellation. Although for purposes of waste projections one is only interested in the total annual capacity, it is convenient to make the capacity projections in terms of specific units.)

000448

Table 1 Nuclear Power Reactors Assumed to be in Operation by 1980

Reactor	State Located	Type	Capacity MW(e)	Startup
Region 1				
Beaver Valley 1	PA	PWR	852	1976
Calvert Cliffs 1	MD	PWR	845	1974
Calvert Cliffs 2	MD	PWR	845	1974
Indian Point 1	NY	PWR	265	1962*
Indian Point 2	NY	PWR	873	1973
Haddam Neck (Conn. Yankee)	CT	PWR	575	1967
Fitzpatrick	NY	BWR	821	1974
Indian Point 3	NY	PWR	965	1976
Maine Yankee	ME	PWR	825	1972
Millstone 1	CT	BWR	660	1970
Millstone 2	CT	PWR	830	1975
Nine Mile Point 1	NY	BWR	620	1969
Oyster Creek 1	NJ	BWR	650	1969
Peach Bottom 2	PA	BWR	1065	1973
Peach Bottom 3	PA	BWR	1065	1974
Pilgrim 1	MA	BWR	655	1974
R. E. Ginna 1	NY	PWR	470	1969
Salem 1	NJ	PWR	1090	1976
Shippingport	PA	LWBR	60	1957**
Three Mile Island 1	PA	PWR	819	1974
Three Mile Island 2	PA	PWR	906	1979±
Vermont Yankee	VT	BWR	514	1972
Yankee-Rowe	MA	PWR	175	1960
Region 2				
Browns Ferry 1	AL	BWR	1065	1973
Browns Ferry 2	AL	BWR	1065	1974
Browns Ferry 3	AL	BWR	1065	1976
Brunswick 1	NC	BWR	821	1976
Brunswick 2	NC	BWR	821	1975
Crystal River 3	FL	PWR	825	1977
E. I. Hatch 1	GA	BWR	786	1974
E. I. Hatch 2	GA	BWR	784	1978
H. B. Robinson	SC	PWR	700	1970
J. M. Farley 1	AL	PWR	829	1977
North Anna 1	VA	PWR	907	1978
North Anna 2	VA	PWR	907	1980

Table 1 (Continued)

Reactor	State Located	Type	Capacity MW(e)	Startup
Region 2 (continued)				
Oconee 1	SC	PWR	887	1973
Oconee 2	SC	PWR	887	1973
Oconee 3	SC	PWR	887	1974
St. Lucie 1	FL	PWR	802	1976
Surry 1	VA	PWR	822	1972
Surry 2	VA	PWR	822	1973
Turkey Point 3	FL	PWR	693	1972
Turkey Point 4	FL	PWR	693	1973
Region 3				
Big Rock Point	MI	BWR	72	1962
Davis-Besse 1	OH	PWR	906	1977
D. C. Cook 1	MI	PWR	1054	1975
D. C. Cook 2	MI	PWR	1100	1978
Dresden 1	IL	BWR	200	1959
Dresden 2	IL	BWR	794	1970
Dresden 3	IL	BWR	794	1971
Duane Arnold 1	IA	BWR	538	1974
Kewannee	WI	PWR	535	1974
La Crosse (Genoa)	WI	BWR	50	1967
Monticello	MN	BWR	545	1970
Palisades	MI	PWR	805	1971
Point Beach 1	WI	PWR	497	1970
Point Beach 2	WI	PWR	497	1972
Prairie Island 1	MN	PWR	530	1973
Prairie Island 2	MN	PWR	530	1974
Quad-Cities 1	IL	BWR	789	1972
Quad-Cities 2	IL	BWR	789	1972
Zion 1	IL	PWR	1040	1973
Zion 2	IL	PWR	1040	1973
Region 4				
Arkansas 1	AR	PWR	850	1974
Cooper	NE	BWR	778	1974
Ft. Calhoun	NE	PWR	457	1973
Ft. St. Vrain	CO	HTGR	330	1974‡‡

000450

Table 1 (Continued)

Reactor	State Located	Type	Capacity MW(e)	Startup
Region 5				
Humboldt Bay 3	CA	BWR	65	1963#
Rancho Seco 1	CA	PWR	918	1974
San Onofre 1	CA	PWR	436	1967
Trojan 1	OR	PWR	1130	1975
	42	PWR	50,927##	
	26	BWR		
	1	LWBR		
	1	HTGR		

*The reactor was shut down in October 1974 due to the inability of the plant (an early design) to meet new requirements on emergency core cooling systems (ECCS). The plant operator (Consolidated Edison) has decided to decommission the plant rather than upgrade the ECCS and restart the plant.

**The Shippingport light water breeder reactor is operated by the Department of the Navy and does not transport low-level waste generated during operations to commercial disposal sites. The plant was shut down in October 1982 and is scheduled for decommissioning starting in 1984.

±This reactor is currently shut down due to an accident in March 1979. Decontamination of the plant is proceeding.

±±The Fort St. Vrain high temperature graphite reactor generates, compared to a light water reactor, a negligible quantity of low-level waste. What small quantities of low-activity waste that have been generated are being stored onsite.

#This plant was shut down by the plant operator in July 1976 for refueling, maintenance, modification of the plant to meet seismic criteria, and geologic studies of the area. These geologic studies are currently continuing. (Also see footnote on page 9.)

##The total includes Three Mile Island 2 and Humboldt Bay 3 but deletes Shippingport, Fort St. Vrain, and Indian Point 1.

Table 2 Nuclear Power Generating Units Under Construction in 1980

Reactor	State Located	Type	Capacity MW(e)	Assumed Startup
Region 1				
Beaver Valley 2	PA	PWR	833	1986
Hope Creek 1	NJ	BWR	1067	1986
Limerick 1	PA	BWR	1065	1985
Limerick 2	PA	BWR	1065	1987
Millstone 3	CT	PWR	1156	1986
Nine Mile Point 2	NY	BWR	1100	1986
Salem 2	NJ	PWR	1115	1981
Seabrook 1	NH	PWR	1200	1984
Seabrook 2	NH	PWR	1200	1986
Shoreham	NY	BWR	819	1983
Susquehanna 1	PA	BWR	1050	1983
Susquehanna 2	PA	BWR	1050	1984
Region 2				
A. W. Vogtle 1	GA	PWR	1110	1987
A. W. Vogtle 2	GA	PWR	1100	1988
BelleFonte 1	AL	PWR	1213	1986
BelleFonte 2	AL	PWR	1213	1989
Catawba 1	SC	PWR	1145	1985
Catawba 2	SC	PWR	1145	1987
Grand Gulf 1	MS	BWR	1250	1983
J. M. Farley 2	AL	PWR	829	1981
North Anna 3	VA	PWR	907	1989
River Bend 1	LA	BWR	934	1985
Sequoyah 1	TN	PWR	1148	1981
Sequoyah 2	TN	PWR	1148	1982
Shearon Harris 1	NC	PWR	900	1985
Shearon Harris 2	NC	PWR	900	1989
V. C. Summer 1	SC	PWR	900	1982
W. B. McGuire 1	NC	PWR	1180	1981
St. Lucie 2	FL	PWR	810	1983
Waterford 3	LA	PWR	1113	1983
Watts Bar 1	TN	PWR	1177	1984
Watts Bar 2	TN	PWR	1177	1985
W. B. McGuire 2	NC	PWR	1180	1983

000452

Table 2 (Continued)

Reactor	State Located	Type	Capacity MW(e)	Assumed Startup
Region 3				
Braidwood 1	IL	PWR	1120	1985
Braidwood 2	IL	PWR	1120	1986
Byron 1	IL	PWR	1120	1984
Byron 2	IL	PWR	1120	1985
Callaway 1	MO	PWR	1120	1984
Carroll County 1	IL	PWR	1120	1999
Carroll County 2	IL	PWR	1120	2000
Clinton 1	IL	BWR	933	1984
E. Fermi 2	MI	BWR	1093	1983
La Salle 1	IL	BWR	1078	1982
La Salle 2	IL	BWR	1078	1983
Marble Hill 1	IN	PWR	1130	1986
Marble Hill 2	IN	PWR	1130	1987
Midland 1	MI	PWR	460	1984
Midland 2	MI	PWR	811	1983
Perry 1	OH	BWR	1205	1984
Perry 2	OH	BWR	1205	1988
W. H. Zimmer 1	OH	BWR	810	1983
Region 4				
Allens Creek 1	TX	BWR	1150	1991
Arkansas 2	AR	PWR	912	1981
Comanche Peak 1	TX	PWR	1111	1984
Comanche Peak 2	TX	PWR	1111	1985
South Texas 1	TX	PWR	1250	1986
South Texas 2	TX	PWR	1250	1988
Wolf Creek	KS	PWR	1150	1984
Region 5				
Diablo Canyon 1	CA	PWR	1084	1982
Diablo Canyon 2	CA	PWR	1106	1983
Palo Verde 1	AZ	PWR	1270	1983
Palo Verde 2	AZ	PWR	1270	1984
Palo Verde 3	AZ	PWR	1270	1986
San Onofre 2	CA	PWR	1100	1982
San Onofre 3	CA	PWR	1100	1983
Skagit 1	WA	BWR	1277	1991
Skagit 2	WA	BWR	1277	1993
WNP 2	WA	BWR	1100	1984
WNP 3	WA	PWR	1242	1986

Table 3 Nuclear Power Reactors Having Indefinite Startup Dates as of 8/82

Plant	State Located	Type	Capacity MW(e)	Projected Startup as of 1980 (Ref. 3)	Projected Startup as of 8/81 (Ref. 11)	% Const. (8/82)	Assumed Startup
Region 2							
Cherokee 1	SC	PWR	1280	1990	Indef.	18	1991
Grand Gulf 2	MS	BWR	1250	1985	1986	22	1989
Hartsville A1	TN	BWR	1233	1985	1988	44	1992
Hartsville A2	TN	BWR	1233	1986	1989	34	Can.
Yellow Creek 1	MS	PWR	1285	1985	1988	35	1993
Yellow Creek 2	MS	PWR	1285	1988	Indef.	3	Can.
River Bend 2	LA	BWR	934	1987	Indef.	0	1995
Region 3							
Clinton 2	IL	BWR	933	1987	Indef.	0-cp*	1993
Region 5							
WNP 1	WA	PWR	1218	1984	1986	62.5	1989
Pebble Springs 1	OR	PWR	1260	1988	1988	0	1995
Pebble Springs 2	OR	PWR	1260	1989	1990	0	1996

*A construction permit has been issued for this unit.

000454

The resulting annual electrical capacity from 1980 to the year 2000 is listed in Table 4. The projections are listed in terms of NRC region and reactor type. The combined total by the year 2000 comes to 134,028 MW(e), which is 35,113 MW(e) less than the year 2000 electrical capacity assumed for the Part 61 EIS (Refs. 1, 2). This revised figure is still believed to be conservative, since it is believed likely that several of the listed plants in Tables 2 and 3 will be canceled or deferred (see, for example, References 6, 7, 9, and 10).*

Annual generation rates of PWR secondary system ion-exchange resins and filter media are estimated using Table 4, by assuming a resin generation rate of 0.32 ft^3/MW(e)-yr for PWRs with CPS (Ref. 3), combined with a precoat filter sludge generation rate of 0.015 ft^3/MW(e)-yr (Ref. 3). It is also assumed that 51% of the PWRs will be equipped with CPS (Ref. 3). These generation rates are listed in Table 5 as a function of NRC region. The generation rates are believed to be conservative since only a fraction of the resin and filter media waste generated by PWRs with CPS will be from the secondary coolant system.

Radionuclide Concentrations

The radionuclide content and concentrations were estimated to the extent possible using experimental data. Reference 12 gives the results of a sampling program for several light water reactor (LWR) waste streams, including 21 samples (all from a three-unit station) of PWR secondary coolant system ion-exchange resins. A geometric average was calculated for each of the radionuclides measured in the 21 samples, assuming an average sample density of 1 gm/cm^3. These average concentrations are listed in Table 6. A total of 21 radionuclides were identified in the 23 samples, of which 17 radionuclides were identified in more than one sample. A number of other radionuclides are also listed in Table 6 which were not specifically analyzed for in the 21 samples, but are of interest in terms of long-term radiological impacts. These additional radionuclides were considered as part of the Part 61 EIS (Refs. 1, 2) and the concentrations of these additional nuclides are estimated from measured radionuclides using generic scaling factors developed as part of the Part 61 data base (specifically, Table B-23 of Reference 3).

---

*Note: Since these updated projections were made, construction of an additional seven units totaling 8,411 MW(e) has been permanently halted. The canceled units include four PWRs (North Anna 3, Cherokee 1, Pebble Springs 1 and 2) and three BWRs (Allens Creek 1, Skagit 1 and 2). (Sources: Nuclear News, Vol. 26, No. 2, February 1983; Nuclear News, Vol. 26, No. 2, June 1983; and Nuclear News, Vol. 26, No. 13, October 1983.) Completion of other units has been delayed or deferred. Finally, Pacific Gas and Electric has announced that it will decommission the Humboldt Bay-3 nuclear unit (63 MW(e) BWR) rather than upgrade the unit to meet NRC seismic requirements. Exactly how and when decommissioning will take place has not been decided (Source: Nuclear News, Vol. 26, No. 10, August 1983).

Table 4: Annual Assumed Electrical Generating Capacity to the Year 2000 (MW(e))

		Region 1	Region 2	Region 3	Region 4	Region 5	Total
1980	P*	10,070 (13)	10,661 (13)	8,534 (11)	1,307 (2)	2,484 (3)	33,056 (42)
	B*	6,050 (8)**	6,407 (7)	4,571 (9)	778 (1)	65 (1)	17,871 (26)
1981	P	11,185 (14)	13,818 (16)	8,534 (11)	2,219 (3)	2,484 (3)	38,240 (47)
	B	6,050 (8)	6,407 (7)	4,571 (9)	778 (1)	65 (1)	17,871 (26)
1982	P	11,185 (14)	15,866 (18)	8,534 (11)	2,219 (3)	4,668 (5)	42,472 (51)
	B	6,050 (8)	6,407 (7)	5,649 (10)	778 (1)	65 (1)	18,949 (27)
1983	P	11,185 (14)	18,969 (21)	9,345 (12)	2,219 (3)	8,144 (8)	49,862 (58)
	B	7,919 (10)	7,657 (8)	8,630 (13)	778 (1)	65 (1)	25,049 (33)
1984	P	12,385 (15)	20,146 (22)	12,045 (15)	4,480 (5)	9,414 (9)	58,470 (66)
	B	8,969 (11)	7,657 (8)	10,768 (15)	778 (1)	1,165 (2)	29,337 (37)
1985	P	12,385 (15)	23,368 (25)	14,285 (17)	5,591 (6)	9,414 (9)	65,043 (72)
	B	10,034 (12)	8,591 (9)	10,768 (15)	778 (1)	1,165 (2)	31,336 (39)
1986	P	15,574 (18)	24,581 (26)	16,535 (19)	6,841 (7)	11,926 (11)	75,457 (81)
	B	12,201 (14)	8,591 (9)	10,768 (15)	778 (1)	1,165 (2)	33,503 (41)
1987	P	15,574 (18)	26,836 (28)	17,665 (20)	6,841 (7)	11,926 (11)	78,842 (84)
	B	13,266 (15)	8,591 (9)	10,768 (15)	778 (1)	1,165 (2)	34,568 (42)
1988	P	15,574 (18)	27,936 (29)	17,665 (20)	8,091 (8)	11,926 (11)	81,192 (86)
	B	13,266 (15)	8,591 (9)	11,973 (16)	778 (1)	1,165 (2)	35,773 (33)
1989	P	15,574 (18)	32,174 (33)	17,665 (20)	8,091 (8)	11,926 (11)	85,430 (90)
	B	13,266 (15)	9,841 (10)	11,973 (16)	778 (1)	1,165 (2)	37,023 (44)
1990	P	15,574 (18)	32,174 (33)	17,665 (20)	8,091 (8)	11,926 (11)	85,430 (90)
	B	13,266 (15)	9,841 (10)	11,973 (16)	778 (1)	1,165 (2)	37,023 (44)
1991	P	15,574 (18)	33,454 (34)	17,665 (20)	8,091 (8)	11,926 (11)	86,710 (91)
	B	13,266 (15)	9,841 (10)	11,973 (16)	1,928 (2)	1,165 (2)	38,173 (45)
1992	P	15,574 (18)	33,454 (34)	17,665 (20)	8,091 (8)	11,926 (11)	86,710 (91)
	B	13,266 (15)	11,074 (11)	11,973 (16)	1,928 (2)	1,165 (2)	39,406 (46)
1993	P	15,574 (18)	34,739 (35)	17,665 (20)	8,091 (8)	11,926 (11)	87,995 (92)
	B	13,266 (15)	11,074 (11)	12,906 (17)	1,928 (2)	1,165 (2)	40,339 (47)
1994	P	15,574 (18)	34,739 (35)	17,665 (20)	8,091 (8)	11,926 (11)	87,995 (92)
	B	13,266 (15)	11,074 (11)	12,906 (17)	1,928 (2)	1,165 (2)	40,339 (47)
1995	P	15,574 (18)	34,739 (35)	17,665 (20)	8,091 (8)	13,186 (12)	89,255 (93)
	B	13,266 (15)	12,008 (12)	12,906 (17)	1,928 (2)	1,165 (2)	41,273 (48)
1996	P	15,574 (18)	34,739 (35)	17,665 (20)	8,091 (8)	14,446 (13)	90,515 (93)
	B	13,266 (15)	12,008 (12)	12,906 (17)	1,928 (2)	1,165 (2)	41,273 (48)
1997	P	15,574 (18)	34,739 (35)	17,665 (20)	8,091 (8)	14,446 (13)	90,515 (93)
	B	13,266 (15)	12,008 (12)	12,906 (17)	1,928 (2)	1,165 (2)	41,273 (48)
1998	P	15,574 (18)	34,739 (35)	17,665 (20)	8,091 (8)	14,446 (13)	90,515 (93)
	B	13,266 (15)	12,008 (12)	12,906 (17)	1,928 (2)	1,165 (2)	41,273 (48)
1999	P	15,574 (18)	34,739 (35)	18,785 (21)	8,091 (8)	14,446 (13)	91,635 (94)
	B	13,266 (15)	12,008 (12)	12,906 (17)	1,928 (2)	1,165 (2)	41,273 (48)
2000	P	15,574 (18)	34,739 (35)	19,905 (22)	8,091 (8)	14,446 (13)	92,755 (95)
	B	13,266 (15)	12,008 (12)	12,906 (17)	1,928 (2)	1,165 (2)	41,273 (48)
							134,028

*P: PWR, B: BWR

**In MW(e), numbers in parentheses indicate number of units.

000456

Table 5 Annual Volumes of Secondary Coolant System Ion-Exchange Resin and Filter Media Waste to the Year 2000 (ft^3/yr)

	Region 1	Region 2	Region 3	Region 4	Region 5	Total
1980	1,720	1,821	1,458	223	424	5,648
1981	1,911	2,361	1,458	379	424	6,533
1982	1,911	2,711	1,458	379	798	7,256
1983	1,911	3,241	1,597	379	1,391	8,519
1984	2,116	3,442	2,058	765	1,608	9,990
1985	2,116	3,992	2,441	955	1,608	11,113
1986	2,661	4,200	2,825	1,169	2,038	12,892
1987	2,661	4,585	3,018	1,169	2,038	13,470
1988	2,661	4,773	3,018	1,382	2,038	13,872
1989	2,661	5,497	3,018	1,382	2,038	14,596
1990	2,661	5,497	3,018	1,382	2,038	14,596
1991	2,661	5,716	3,018	1,382	2,038	14,814
1992	2,661	5,716	3,018	1,382	2,038	14,814
1993	2,661	5,935	3,018	1,382	2,038	15,034
1994	2,661	5,935	3,018	1,382	2,038	15,034
1995	2,661	5,935	3,018	1,382	2,253	15,249
1996	2,661	5,935	3,018	1,382	2,468	15,464
1997	2,661	5,935	3,018	1,382	2,468	15,464
1998	2,661	5,935	3,018	1,382	2,468	15,464
1999	2,661	5,935	3,209	1,382	2,468	15,656
2000	2,661	5,935	3,401	1,382	2,468	15,847
Totals:						
(ft^3)	51,600	101,032	56,121	23,384	39,188	271,325
(m^3)	(1,461)	(2,861)	(1,589)	(662)	(1,110)	(7,684)

Table 6 Assumed Radionuclide Distribution in Secondary System Ion-Exchange Resins and Filter Media

Isotope	Concentration ($\mu Ci/cm^3$)	No. of Samples	Isotope	Concentration ($\mu Ci/cm^3$)	No. of Samples
H-3	1.15E-4	S*	Ag-110m	5.88E-5	4
C-14	4.25E-6	S	I-129	1.06E-7	S
Cr-51	1.33E-3	9	Cs-134	3.19E-4	21
Mn-54	2.36E-5	19	Cs-135	3.58E-8	S
Fe-55	2.08E-5	S	Cs-137	9.54E-4	21
Fe-59	6.62E-5	10	Ce-141	1.33E-4	20
Co-58	3.92E-5	20	Ce-144	1.47E-4	3
Co-60	4.03E-5	20	Pu-238	7.29E-6	21
Zn-65	9.12E-6	21	Pu-239	3.69E-6	21
Ni-59	2.49E-8	S	Pu-241	1.61E-4	S
Ni-63	7.66E-6	S	Pu-242	8.08E-9	S
Sr-90	8.42E-6	S	Am-241	8.54E-6	19
Nb-94	7.86E-10	S	Am-243	5.76E-7	S
Zr-95	2.69E-5	21	Cm-242	1.61E-5	19
Tc-99	3.58E-8	S	Cm-243	3.94E-9	S
Ru-103	9.37E-5	12	Cm-244	4.42E-6	19
			Total:	3.60E-3	21

*S: These radionuclides were scaled from measured radionuclides using the generic scaling factors presented in Reference 3.

As shown, the summed radionuclide concentration for the 32 radionuclides listed in Table 6 is 3.6E-3 $\mu Ci/cm^3$. The range of radionuclide concentrations across the 21 samples, after adjusting to account for the additional scaled nuclides, varies from 1.03E-4 $\mu Ci/cm^3$ to 1.35E-1 $\mu Ci/cm^3$. This is a variation of 1310 from the lowest to the highest sample value, although about 75% of the samples are within a factor of 10. This is shown below, where the number of samples is listed as a function of increment in range.

Range ($\mu Ci/cm^3$)	No. of samples in range	Arith. average across range ($\mu Ci/cm^3$)
1E-4 - 5E-4	2	1.67E-4
5E-4 - 1E-3	0	-
1E-3 - 5E-3	9	2.03E-3
5E-3 - 1E-2	7	6.44E-3
1E-2 - 5E-2	2	2.51E-2
5E-2 - 1E-1	0	-
1E-1 - 5E-1	1	1.35E-1

000458

References

1. U.S. Nuclear Regulatory Commission, "Draft Environmental Impact Statement on 10 CFR Part 61: Licensing Requirements for Land Disposal of Radioactive Waste," NUREG-0782, Office of Nuclear Material Safety and Safeguards, September 1981.

2. U.S. Nuclear Regulatory Commission, "Final Environmental Impact Statement on 10 CFR Part 61: Licensing Requirements for Land Disposal of Radioactive Waste," NUREG-0945, Office of Nuclear Material Safety and Safeguards, November 1982.

3. Wild, R. E., et al., "Data Base for Radioactive Waste Management, Vol. 2: Waste Source Options Report," NUREG/CR-1759, Dames and Moore for U.S. Nuclear Regulatory Commission, November 1981.

4. Department of Energy, "Nuclear Reactors Built, Being Built, or Planned in the United States as of June 30, 1979," DOE/TIC-8200-R40, DOE Technical Information Center, November 1979.

5. Nuclear News, Vol. 25, No. 10, August 1982.

6. Nuclear News, Vol. 25, No. 15, December 1982.

7. Nuclear News, Vol. 25, No. 13, October 1982.

8. Nuclear News, Vol. 25, No. 11, September 1982.

9. Nuclear News, Vol. 25, No. 5, April 1982.

10. Nuclear News, Vol. 25, No. 7, May 1982.

11. Nuclear News, Vol. 24, No. 10, August 1981.

12. Cline, J. E., et al., "Activity Levels of Transuranic Nuclides in Low-Level Solid Wastes From U.S. Power Reactors," Final Report by Science Applications, Inc., for Electric Power Research Institute.

APPENDIX F

COMPUTER LISTINGS

APPENDIX F. Computer Listings

This appendix presents the listings of the two computer codes developed as part of the de minimis waste impacts analysis calculational methodology. In the following pages, the IMPACTS code is first presented, followed by INVIMPS. The IMPACTS code determines annual radiological impacts to individuals and populations from release of de minimis waste into less restrictive disposal pathways. The INVIMPS code determines limiting concentrations of radionuclides based upon comparison of radiological impacts to an individual with a set of organ-specific dose limitation criteria.

The two codes are followed by listings of two of the three data files required for program operation. The first data file, TAPE1, provides values for radiological fundamental dose conversion factors and other generic pathways information such as uptake factors. The second data file, TAPE2, provides values for treatment/disposal site environmental parameters as well as treatment/disposal technology parameters. The third data file, TAPE5, provides waste physical and radiological characteristics as well as execution directives to the codes. The TAPE5 file always varies depending upon the particular problem considered, and example TAPE5 files are presented in Appendix G for each example problem considered in this report.

Significant additional information regarding the operation of the two codes, as well as definitions of the principal variable names in the codes, is presented in Chapter 8.0 of this report.

```
      CHARACTER BASN*10,NUC*6,SOL*1,SOLB*1
      COMMON/BAST/BAS(2,92),BIMP(10,65),ISPC(2,15),PDCF(85,10,7)
     +      /CHRC/BASN(2),NUC(85),SOL(85),SOLB(85)
     +      /DTNX/IR,IDAT,IQ,IPOP,ILFE,IINS,IOFL,NSTR
     +      /NUCS/AL(85),FMF(85),RET(85,5),FRACT(85,3),NUX(85)
     +      /DRP1/FSC(3),FSA(3),PRC(3,5),TSC(3,5),QFC(3,3),
     +            DTTM(3,5),TTM(3,3,5),DTPC(3,5),TPC(3,3,5),NRET(3)
     +      /DRP2/TPOP(3),TDOZ(3),WVEL(3),EFAC(3),POP(3),
     +            POPE(3),POPW(3),AXOQ(3),EERO(5),EREC(5)
     +      /FACP/TDIS(5),TVEL(5),VINC(5),XOQI(5),EDFI(5),
     +            DEN1(5),VANN(5),XOQO(5),EDFO(5),DEN2(5),
     +            TWI(5,3),TWO(5,3),ADAY(5,3),RMIX(5),
     +            EMP(5),EFF(5),SEFF(5),GERO(5),OSWR
```


000462

```
      PROGRAM IMPACTS
C
C*****************************************************************
C     THIS CODE REPRESENTS AN ANALYSIS METHODOLOGY FOR DETERMINING  *
C     THE RADIOLOGICAL IMPACTS ASSOCIATED WITH THE DISPOSAL OF      *
C     DE MINIMIS WASTE.  IT CALCULATES THE IMPACTS UNDER A NUMBER   *
C     OF SCENARIOS, INCLUDING THOSE INVOLVED WITH: TRANSPORTATION   *
C     OF THE WASTE; SORTING/INCINERATION/RECYCLE OF THE WASTE; AND  *
C     FINAL TREATMENT/DISPOSAL CONSIDERATIONS.                      *
C                                                                   *
C     THE INPUT/OUTPUT FILES ARE IDENTIFIED AS FOLLOWS:             *
C                                                                   *
C         TAPE1 = INPUT FILE CONTAINING THE BASIC DOSE CONVERSION   *
C                 FACTOR INFORMATION.                               *
C                                                                   *
C         TAPE2 = INPUT FILE CONTAINING THE DEFAULT ENVIRONMENTAL,  *
C                 TREATMENT, AND DISPOSAL PARAMETERS USED IN THIS   *
C                 ANALYSIS.                                         *
C                                                                   *
C         TAPE5 = INPUT FILE CONTAINING THE WASTE STREAM CHARACTER- *
C                 ISTICS PERTAINING TO A SPECIFIC APPLICATION.      *
C                 THIS FILE WILL MOST LIKELY CHANGE WITH EACH CASE  *
C                 UNDER CONSIDERATION.                              *
C                                                                   *
C         TAPE6 = OUTPUT FILE CONTAINING THE MAIN RESULTS OF THE    *
C                 ANALYSIS.                                         *
C*****************************************************************
C
      CHARACTER ORG(10)*9,SCN(36)*6,FAS(5)*20
      INCLUDE 'IMPCOMM.FOR'
      COMMON/CHYN/NXUC(85),ICH(8,10),LCH(10),ACT(8),BCT(8,2)
     +      /UPTK/FK(21),FFD(4675)
      DIMENSION TYMD(16),BIMPT(10,65)
      DATA TYMD/20.,40.,60.,80.,100.,120.,160.,200.,400.,600.,
     .          800.,1000.,2000.,5000.,10000.,20000./
      DATA FAS/'GENERATOR FACILITY  ','SANITARY LANDFILL   ',
     .         'OPEN DUMP FACILITY  ','HAZARDOUS WASTE I   ',
     .         'HAZARDOUS WASTE II  '/
      DATA ORG/'  LUNGS  ','  S. WALL ','  LLI WALL','  T. BODY ',
     .         ' KIDNEYS ','  LIVER  ','  RED MAR ','   BONE  ',
     .         ' THYROID ','   ICRP  '/
      DATA SCN/'INT-CO','INT-AG','IN-AIR','ER-AIR','IN-WAT','ER-WAT',
     .         'IC-POP','IC-IND','IC-WOR','IC-MWR','OP-POP','OP-IND',
     .         'OP-WOR','OP-MWR','  20YR','  40YR','  60YR','  80YR',
     .         ' 100YR',' 120YR',' 160YR',' 200YR',' 400YR',' 600YR',
     .         ' 800YR',' 1K YR',' 2K YR',' 5K YR','10K YR','20K YR',
     .         'TR-MAX','TR-OCC','TR-POP','LA-OPS','LA-OVF','LA-AIR'/
      DATA NUC/'H-3   ','C-14  ','NA-22 ','P-32  ','P-33  ','S-35  ',
     .         'CL-36 ','CA-45 ','SC-46 ','CR-51 ','MN-54 ','FE-55 ',
     .         'FE-59 ','CO-57 ','CO-58 ','CO-60 ','NI-59 ','NI-63 ',
     .         'ZN-65 ','SE-75 ','RB-86 ','SR-85 ','SR-89 ','SR-90 ',
     .         'ZR-95 ','NB-94 ','NB-95 ','MO-99 ','TC-99 ','TC-99M',
     .         'RU-103','RU-106','AG-108','AG-110','CD-109','SN-113',
     .         'SN-126','SB-124','SB-125','I-125 ','I-129 ','I-131 ',
     .         'CS-134','CS-135','CS-136','CS-137','BA-140','LA-140',
     .         'CE-141','CE-144','EU-152','EU-154','YB-169','PB-210',
     .         'PO-210','RN-222','RA-226','RA-228','AC-227','TH-228',
     .         'TH-229','TH-230','TH-232','PA-231','U-232 ','U-233 ',
     .         'U-234 ','U-235 ','U-236 ','U-238 ','NP-237','PU-236',
     .         'PU-238','PU-239','PU-240','PU-241','PU-242','PU-244',
     .         'AM-241','AM-243','CM-242','CM-243','CM-244','CM-248',
     .         'CF-252'/
      DATA NTYM/16/
      DATA NXUC/27*0,1,0,1,16*0,1,6*0,1,0,3*1,3*0,24*1/
      DATA ICH/85,84,78,75,69,63,58,60,83,75,69,63,58,60, 0, 0,
     *         82,74,68,64,59, 0, 0, 0,81,73,67,62,57,56,54,55,
     *         80,74,68,64,59, 0, 0, 0,76,79,71,66,61, 0, 0, 0,
     *         77,70,67,62,57,56,54,55,72,65,60, 0, 0, 0, 0, 0,
     *         28,30,29, 0, 0, 0, 0, 0,47,48, 0, 0, 0, 0, 0, 0/
      DATA LCH/8,6,5,8,5,5,8,3,3,2/
      DATA FK/8.E-4,.01,.0483,7.65E-4,240.,.0037,.25,1.,1600.,
     +  190.,50.,95.,.3,50.,60.,370.,6.9,1.,8.5E-9,8000.,16./
      DATA FRACT/.9,.75,26*2.5E-3,4*.01,7*2.5E-3,3*.01,43*2.5E-3,
     +           .9,.75,26*5.0E-3,4*.01,7*5.0E-3,3*.01,43*5.0E-3,
     +           .9,.75,26*.019,4*.038,7*.019,3*.038,43*.019/
```

```
  101 FORMAT(8I3)
  102 FORMAT(1H1/2X,A20//2X'LIFE='I3,2X'OVFL='I3,2X'NSTR='I3/
     *       2X'REGN='I3,2X'DATA='I3/2X'IPOP='I3,2X'INST='I3)
  103 FORMAT(1H1)
  104 FORMAT(/2X'TRANSPORTATION IMPACTS'10X,A6' ='1PE9.2' MREM/YR'
     */34X,A6' ='E9.2' MREM/YEAR'/34X,A6' ='E9.2' PERSON-MREM/YR')
  106 FORMAT(1H1/2X'CUMULATIVE IMPACTS'/)
      DO 10 I=1,3
   10 FRACT(7,I)=FRACT(29,I)
C
C     START OF A GIVEN CASE - ONE FACILITY AND ANY NUMBER OF
C     WASTE STREAMS WITH GIVEN CHARACTERISTICS
C
   20 READ(5,101,END=50) IR,IDAT,IQ,NSTRD,IPOP,ILFE,IINS,IOFL
      WRITE(6,102) FAS(IQ),ILFE,IOFL,NSTRD,IR,IDAT,IPOP,IINS
      CALL READ2
      CALL ZERO(BIMPT,650)
      DO 40 ISTRD=1,NSTRD
      CALL ZERO(BIMP,650)
      IF(ISTRD.NE.1)WRITE(6,103)
C
C     CALCULATE IMPACTS
C
      CALL READ5
      CALL SPLICE
      CALL INTIMP
      CALL EXPWAS
      CALL OPSIMP
      IF(IOFL.NE.0)CALL OVRFLO
      CALL GWATER(NTYM,TYMD)
C
C     NORMALIZE INDIVIDUAL IMPACTS WITH NUMBER OF FACILITIES
C
      CALL DIVVY(1,1,2)
      CALL DIVVY(1,5,6)
      IF(ISPC(1,10).GT.0)CALL DIVVY(2,8,8)
      IF(ISPC(1,10).GT.0)CALL DIVVY(2,10,10)
      CALL DIVVY(1,12,12)
      CALL DIVVY(1,14,14)
      CALL DIVVY(1,15,64)
C
      WRITE(6,104) (SCN(I+26),BAS(1,I),I=5,7)
      CALL PRNTE(ORG,SCN,BIMP)
      DO 30 I=1,10
      DO 30 J=1,65
   30 BIMPT(I,J)=BIMPT(I,J)+BIMP(I,J)
   40 CONTINUE
      IF(NSTRD.EQ.1)GO TO 20
      WRITE(6,106)
      CALL PRNTE(ORG,SCN,BIMPT)
      GO TO 20
C
C     END OF A GIVEN CASE, GO TO 20 FOR NEW CASE
C
   50 STOP 'NORMAL TERMINATION'
      END
C
C*************************************************************
C
      SUBROUTINE PRNTE(ORG,SCN,BI)
C
C*********************************************************************
C     THIS ROUTINE PRINTS OUT MOST OF THE FINAL IMPACT RESULTS       *
C     TO TAPE6.                                                      *
C*********************************************************************
C
      CHARACTER ORG(10)*9,SCN(36)*6
      DIMENSION BI(10,65)
      WRITE(6,107)
      WRITE(6,105) ORG
      WRITE(6,103) (SCN(J),(BI(I,J),I=1,10),J=1,2)
      WRITE(6,108)
      WRITE(6,105) ORG
      WRITE(6,103) (SCN(J),(BI(I,J),I=1,10),J=3,6)
      WRITE(6,109)
      WRITE(6,105) ORG
      WRITE(6,103) (SCN(J),(BI(I,J),I=1,10),J=7,14)
```

```
      WRITE(6,114)
      WRITE(6,105) ORG
      WRITE(6,103) (SCN(J-29),(BI(I,J),I=1,10),J=63,65)
      WRITE(6,110)
      WRITE(6,111)
      WRITE(6,104) ORG
      WRITE(6,103) (SCN(J),(BI(I,J),I=1,10),J=15,30)
      WRITE(6,112)
      WRITE(6,104) ORG
      WRITE(6,103) (SCN(J-16),(BI(I,J),I=1,10),J=31,46)
      WRITE(6,113)
      WRITE(6,104) ORG
      WRITE(6,103) (SCN(J-32),(BI(I,J),I=1,10),J=47,62)
C
  103 FORMAT(2X,A6,1P,10E9.2)
  104 FORMAT(4X,'TIME',10A9)
  105 FORMAT(4X,'SCN ',10A9)
  107 FORMAT(/2X'INTRUDER IMPACTS:'/)
  108 FORMAT(/2X'EXPOSED WASTE IMPACTS:'/)
  109 FORMAT(/2X'INCINERATION AND OPERATIONAL IMPACTS:'/)
  110 FORMAT(1H1/2X'GROUND WATER IMPACTS:')
  111 FORMAT(/2X'INTRUDER-WELL')
  112 FORMAT(/2X'POPULATION-WELL')
  113 FORMAT(/2X'POPULATION-SURFACE WATER')
  114 FORMAT(/2X'LEACHATE ACCUMULATION IMPACTS:'/)
      RETURN
      END
C
C*****************************************************************
C
      SUBROUTINE DIVVY(MODE,N1,N2)
C
C*****************************************************************
C     THIS ROUTINE DIVIDES SELECTED IMPACTS BY EITHER THE NUMBER     *
C     OF DISPOSAL FACILITIES OR BY THE NUMBER OF PROCESSING          *
C     FACILITIES (DEPENDING ON THE VALUE OF MODE).                   *
C*****************************************************************
C
      INCLUDE 'IMPCOMM.FOR'
      IF(MODE.EQ.2)GO TO 20
      IF(ISPC(1,11).EQ.0)WRITE(6,100)
      ADIV=ISPC(1,11)
      IF(ADIV.EQ.0.) ADIV=1.
      DO 10 I=1,10
      DO 10 J=N1,N2
   10 BIMP(I,J)=BIMP(I,J)/ADIV
      RETURN
   20 IF(ISPC(1,10).EQ.0)WRITE(6,101)
      ADIV=ISPC(1,10)
      IF(ADIV.EQ.0.) ADIV=1.
      DO 30 I=1,10
      DO 30 J=N1,N2
   30 BIMP(I,J)=BIMP(I,J)/ADIV
  100 FORMAT(/2X'**** NUMBER OF DISPOSAL FACILITIES   = 1 ****')
  101 FORMAT(/2X'**** NUMBER OF PROCESSING FACILITIES = 1 ****')
      RETURN
      END
C
C*************************************************************
C
      SUBROUTINE READ2
C
C*****************************************************************
C     THIS SUBROUTINE READS IN THE TREATMENT/DISPOSAL SITE           *
C     ENVIRONMENTAL CHARACTERISTICS AND TREATMENT/DISPOSAL           *
C     TECHNOLOGY CHARACTERISTICS FROM TAPE2.                         *
C*****************************************************************
C
      INCLUDE 'IMPCOMM.FOR'
      DIMENSION PDS(6),WSP(6),STB(6),DSP(6)
  102 FORMAT(10E10.3)
  104 FORMAT(15I5)
  202 FORMAT(/2X'OPTIONAL XOQ PARAMS'/(2X,1P,4E10.3))
  203 FORMAT(2X,1P,5E10.3)
  204 FORMAT(/2X'OPTIONAL ENVIRONMENTAL PARAMETERS'/2X'PRC ='1PE9.2,
     .       2X'TSC ='E9.2,2X'QFC ='3E9.2/2X'FSC ='E9.2,2X'DTTM='E9.2,
     .       2X'TTM ='3E9.2/2X'FSA ='E9.2,2X'DTPC='E9.2,2X'TPC ='3E9.2/
     .       2X'WVEL='E9.2,2X'AXOQ='E9.2,2X'EFAC='E9.2)
```

```
  205 FORMAT(/2X'OPTIONAL FACILITY PARAMETERS'/2X'VINC='1PE9.2,
     .2X'VANN='E9.2,2X'ADAYS='3E9.2/2X'EMP ='E9.2,2X'EFF ='E9.2,
     .2X'SEFF='E9.2,2X'DEN1='E9.2,2X'DEN2='E9.2/
     .2X'RMIX='E9.2,2X'OSWR='E9.2,2X'OSDL='E9.2)
C
C     READ DEFAULT SITE ENVIRONMENTAL PARAMETER VALUES
C
      REWIND 2
      DO 10 I=1,3
      READ(2,102) (PRC(I,J),TSC(I,J),DTTM(I,J),(TTM(I,K,J),K=1,3),
     *            DTPC(I,J),(TPC(I,K,J),K=1,3),J=1,5)
      READ(2,102) FSC(I),FSA(I),(QFC(I,J),J=1,3),POP(I),POPE(I),
     *            POPW(I),TPOP(I),TDOZ(I),WVEL(I),AXOQ(I),EFAC(I),
     *            EERO(I),EREC(I)
      READ(2,104) NRET(I)
   10 CONTINUE
C
C     READ DEFAULT FACILITY PARAMETER VALUES
C
      DO 12 I=1,5
      READ(2,102) TDIS(I),TVEL(I),VINC(I),XOQI(I),EDFI(I),DEN1(I),
     *            VANN(I),XOQO(I),EDFO(I),DEN2(I),(TWI(I,J),J=1,3),
     *            (TWO(I,J),J=1,3),(ADAY(I,J),J=1,3),RMIX(I),
     *            EMP(I),EFF(I),SEFF(I),GERO(I)
   12 CONTINUE
C
C     START READING OPTIONAL PARAMETER VALUES
C
      IF(IQ.EQ.1.AND.IDAT.EQ.0)IDAT=2
      IF(IQ.EQ.1.AND.IDAT.EQ.1)IDAT=3
      IF(IDAT.EQ.0)GO TO 22
      IF(IDAT.EQ.2)GO TO 20
C
C      SITE-SPECIFIC POP AND XOQ OPTION
C
      DO 14 I=1,6
   14 READ(2,102) DSP(I),PDS(I),WSP(I),STB(I)
      WRITE(6,202) (DSP(I),PDS(I),WSP(I),STB(I),I=1,6)
      READ(2,102) HYTI,HYTO,DISTI,DISTO,EDFID,EDFOD
      WRITE(6,203) HYTI,HYTO,DISTI,DISTO,EDFID,EDFOD
      A1=0.
      A2=0.
      DO 16 I1=1,6
      A1=A1+STB(I1)*XOQFC(HYTI,DISTI,WSP(I1),I1)
      A2=A2+STB(I1)*XOQFC(HYTO,DISTO,WSP(I1),I1)
   16 CONTINUE
      XOQI(IQ)=A1
      XOQO(IQ)=A2
      EDFI(IQ)=EDFID
      EDFO(IQ)=EDFOD
      A1=0.
      DO 18 I1=1,6
      DO 18 I2=1,6
      A1=A1+PDS(I1)*STB(I2)*XOQFC(HYTI,DSP(I1),WSP(I2),I2)
   18 CONTINUE
      POP(IR)=A1
      POPE(IR)=3.*A1
   20 IF(IDAT.EQ.1)GO TO 22
C
C      SITE-SPECIFIC ENVIRONMENTAL PARAMETERS
C
      READ(2,102) PRC(IR,IQ),TSC(IR,IQ),DTTM(IR,IQ),
     +            (TTM(IR,J,IQ),J=1,3),DTPC(IR,IQ),(TPC(IR,J,IQ),J=1,3),
     +      FSC(IR),FSA(IR),(QFC(IR,J),J=1,3),WVEL(IR),AXOQ(IR),EFAC(IR)
      READ(2,104) NRET(IR)
      WRITE(6,204) PRC(IR,IQ),TSC(IR,IQ),(QFC(IR,J),J=1,3),
     *FSC(IR),DTTM(IR,IQ),(TTM(IR,J,IQ),J=1,3),FSA(IR),DTPC(IR,IQ),
     *(TPC(IR,J,IQ),J=1,3),WVEL(IR),AXOQ(IR),EFAC(IR)
   22 IF(IQ.NE.1)GO TO 24
C
C      SITE-SPECIFIC TREATMENT/DISPOSAL PARAMETERS
C
      READ(2,102) VINC(1),VANN(1),(ADAY(1,J),J=1,3),EMP(1),EFF(1),
     +            SEFF(1),DEN1(1),DEN2(1),RMIX(1),GERO(1),OSWR,OSDL
      TWO(1,3)=OSDL*1.E-6/DEN2(1)
      WRITE(6,205) VINC(1),VANN(1),(ADAY(1,J),J=1,3),EMP(1),EFF(1),
     +            SEFF(1),DEN1(1),DEN2(1),RMIX(1),GERO(1),OSWR,OSDL
```

```
   24 IF(IPOP.EQ.1.OR.IDAT.EQ.1.OR.IDAT.EQ.3)RETURN
C
C      MODIFY POP FOR URBAN ENVIRONMENT
C
      DO 26 I=1,3
      POPE(I)=POPE(I)*10.
   26 POP(I)=POP(I)*10.
      RETURN
      END
C
C*************************************************************
C
      SUBROUTINE READ5
C
C*****************************************************************
C     THIS SUBROUTINE READS IN THE WASTE STREAM CHARACTERISTICS      *
C     FROM TAPE5.  IT ALSO CALLS SUBROUTINE "UPTAKE" TO COMPUTE      *
C     THE PATHWAY DOSE CONVERSION FACTORS AND THEN CALCULATES THE    *
C     TRANSPORTATION EXPOSURES.                                      *
C*****************************************************************
C
      CHARACTER NUCD*6,SOLD*1,BLANK*6
      INCLUDE 'IMPCOMM.FOR'
      DIMENSION NUCD(5),SOLD(5),COND(5)
      DATA BLANK/'      '/
  101 FORMAT(A10,3E10.3)
  102 FORMAT(15I5)
  103 FORMAT(5(A6,1X,A1,E10.3,2X))
  104 FORMAT(/2X'WASTE: 'A10,2X'WEIGHT:'1PE9.2' MT  DENSITY:'
     *       E9.2' MT/M3'//2X'ID='I2,2X'IA='I2,2X'IK1='I2,2X'IK2='
     *       I3,2X'PROCESS='I2/2X'IXS='4I4/2X'ICS='4I4)
      NSTR=1
      CALL ZERO(BAS,184)
      DO 10 I=1,85
   10 NUX(I)=0
C
C     START READING WASTE STREAM CHARACTERISTICS
C
      READ(5,101) BASN(1),BAS(1,1),BAS(1,2),BAS(1,3)
      READ(5,102) (ISPC(1,J),J=1,15)
      WRITE(6,104) BASN(1),BAS(1,1),BAS(1,2),(ISPC(1,J),J=1,5),
     *             (ISPC(1,J),J=8,15)
   12 READ(5,103,END=20) (NUCD(I),SOLD(I),COND(I),I=1,5)
      IF(NUCD(1).EQ.BLANK)GO TO 20
      DO 18 J=1,5
      DO 14 I=1,85
      IF(NUCD(J).EQ.NUC(I))GO TO 16
   14 CONTINUE
      IF(NUCD(J).EQ.BLANK)GO TO 20
      STOP 'CANT FIND NUCLIDE NAME READ5'
   16 NUX(I)=1
      SOL(I)=SOLD(J)
      BAS(1,I+7)=COND(J)
   18 CONTINUE
      GO TO 12
C
   20 CALL UPTAKE
      IF(IQ.EQ.1)RETURN
C
C      TRANSPORTATION SECTION
C
C      BAS(5) - MAXIMUM DRIVER IMPACTS
C      BAS(6) - TOTAL DRIVERS IMPACTS
C      BAS(7) - POPULATION IMPACTS
C
      A1=ISPC(1,9)/100.
      DGA=0.
      DO 22 I=1,85
      IF(NUX(I).EQ.1)DGA=DGA+PDCF(I,4,5)*BAS(1,I+7)
   22 CONTINUE
      DGA=DGA*BAS(1,2)/(A1*BAS(1,2)+DEN1(IQ)*(1.-A1))
      A3=BAS(1,1)/4.534
      IF(ISPC(1,3).NE.0)A3=A3/0.75
      A4=A3/(ISPC(1,8)*A1)
      IF(IQ.GT.3)GO TO 24
      A2=(COFF(1.,2.)*2.+COFF(1.,4.)*0.5)/8760.
      IF(A4.GT.750.)BAS(1,5)=DGA*A1*A2*1.6*750.
      IF(A4.LE.750.)BAS(1,5)=DGA*A1*A2*1.6*A4
      GO TO 26
```

```
   24 A2=(COFF(1.,2.)*5.+COFF(1.,4.)*0.5)/8760.
      IF(A4.GT.250.)BAS(1,5)=DGA*A1*A2*1.6*250.
      IF(A4.LE.250.)BAS(1,5)=DGA*A1*A2*1.6*A4
   26 BAS(1,6)=2.*DGA*A2*1.6*A3
      A1=TPOP(IR)*TDIS(IQ)*TDOZ(IR)/TVEL(IQ)
      BAS(1,7)=A1*100.*DGA*A3*1.6*COFF(1.,4.)/8760.
      RETURN
      END
C
C*********************************************************
C
      SUBROUTINE UPTAKE
C
C*****************************************************************
C     THIS SUBROUTINE READS IN (TAPE1) THE FUNDAMENTAL DOSE       *
C     CONVERSION FACTORS AND RELATED NUCLIDE-SPECIFIC PARAMETERS  *
C     AND UPTAKE FACTORS. THE CALL TO SUBROUTINE "DOSE" INITIATES *
C     CALCULATION OF THE PATHWAY DOSE CONVERSION FACTORS.         *
C*****************************************************************
C
      CHARACTER TNUC(159)*6,TSOL(159)*1
      INCLUDE 'IMPCOMM.FOR'
      COMMON/UPTK/FK(21),FF(85,5),DCF(85,10,5)
      DIMENSION BAS2(159,20),BAS4(85,20),BAS3(85,10)
      CALL ZERO(FF,4675)
      REWIND 1
C
C     INHALATION/INGESTION DCF'S
C
      READ(1,103) (SOLB(I),I=1,85)
      READ(1,101) A1
      READ(1,101) (TSOL(I),TNUC(I),(BAS2(I,J),J=1,10),I=1,159)
      READ(1,101) A1
      READ(1,101) (TSOL(I),TNUC(I),(BAS2(I,J),J=11,20),I=1,159)
      DO 50 INUC=1,85
      IF(NUX(INUC).EQ.0)SOL(INUC)=SOLB(INUC)
      DO 10 I=1,159
      IF(NUC(INUC).EQ.TNUC(I))GO TO 20
   10 CONTINUE
      STOP 'CANT FIND NUCLIDE NAME INH/ING'
   20 IF(SOL(INUC).EQ.TSOL(I))GO TO 30
      I=I+1
      IF(TNUC(I).EQ.TNUC(I-1))GO TO 20
      STOP 'CANT FIND NUCLIDE SOLUBILITY'
   30 DO 40 J=1,10
      DCF(INUC,J,1)=BAS2(I,J)
   40 DCF(INUC,J,2)=BAS2(I,J+10)
   50 CONTINUE
C
C     DIRECT GAMMA EXPOSURE DCF'S
C
      READ(1,101) A1
      READ(1,102) (TNUC(I),(BAS4(I,J),J=1,10),I=1,85)
      READ(1,101) A1
      READ(1,102) (TNUC(I),(BAS4(I,J),J=11,20),I=1,85)
      READ(1,101) A1
      READ(1,102) (TNUC(I),(BAS3(I,J),J=1,10),I=1,85)
      DO 90 INUC=1,85
      DO 60 I=1,85
      IF(NUC(INUC).EQ.TNUC(I))GO TO 70
   60 CONTINUE
      STOP 'CANT FIND NUCLIDE NAME DCF-4/5'
   70 DO 80 J=1,10
      DCF(INUC,J,3)=BAS3(I,1)
      DCF(INUC,J,4)=BAS4(I,J)
   80 DCF(INUC,J,5)=BAS4(I,J+10)
C
C     STORE AL, FMF, FF, AND CALCULATE REMAINING RET'S
C
      AL(INUC)=BAS3(I,7)
      FMF(INUC)=BAS3(I,8)
      RET(INUC,1)=BAS3(I,9)
      RET(INUC,4)=BAS3(I,10)
      A2=RET(INUC,4)
      A1=(A2/RET(INUC,1))**0.334
      RET(INUC,5)=A2*A1
      RET(INUC,3)=A2/A1
      RET(INUC,2)=RET(INUC,1)*A1
```


000468

```
      FF(INUC,1)=BAS3(I,2)
      FF(INUC,2)=BAS3(I,3)
      FF(INUC,3)=BAS3(I,4)
      FF(INUC,4)=BAS3(I,5)
      FF(INUC,5)=BAS3(I,6)
   90 CONTINUE
      CALL DOSE
  101 FORMAT(A1,1X,A6,1X,10E9.2)
  102 FORMAT(A6,3X,10E9.2)
  103 FORMAT(90A1)
      RETURN
      END
C
C*************************************************************
C
      SUBROUTINE DOSE
C
C*********************************************************************
C     THIS SUBROUTINE CALCULATES THE PATHWAY DOSE CONVERSION        *
C     FACTORS USED IN DETERMINING THE IMPACTS IN THE REMAINDER OF   *
C     THIS CODE.  INCORPORATED ARE 85 RADIONUCLIDES, 10 BODY ORGANS *
C     AND 7 MAJOR EXPOSURE PATHWAYS.  SEE APPENDIX D.               *
C*********************************************************************
C
      CHARACTER IPA9*6,IPA1*6,IPA5*6
      INCLUDE 'IMPCOMM.FOR'
      COMMON/UPTK/V1,V2,S1,S2,Z,RI,R,CY,D,F2,F3,F5,F7,F8,F8P,
     +            F11,F13,F13P,F14,F15,F18,FF(85,5),DCF(85,10,5)
      DATA IPA9,IPA1,IPA5/'I-129 ','I-131 ','I-125 '/
      DO 40 IN=1,85
      PTP=F2+F3*(FF(IN,2)*F5+FF(IN,3)*F7*365.)
      PT=PTP*FF(IN,1)
      FT=F8*FF(IN,2)*F5+F8P*FF(IN,3)*F7*365.+F11
      F12N=FF(IN,4)*F13+FF(IN,5)*F13P
      V=V1
      IF(NUC(IN).EQ.IPA9)V=V2
      IF(NUC(IN).EQ.IPA1)V=V2
      IF(NUC(IN).EQ.IPA5)V=V2
      D1=86400.*V/(S2*Z)
      D2=86400.*R*V/S1
      W1=RI/(S2*Z)
      W2=R*RI/S1
      DO 40 IO=1,10
      A1=F18*(F14*(F15*DCF(IN,IO,2)+DCF(IN,IO,5))+DCF(IN,IO,4))
      PDCF(IN,IO,1)=F15*DCF(IN,IO,2)+DCF(IN,IO,5)+A1*D1
    $  PDCF(IN,IO,2)=F15*DCF(IN,IO,2)+DCF(IN,IO,5)+0.242*A1*D1
      PDCF(IN,IO,3)=PDCF(IN,IO,1)+(D1*PT+(D2/CY)*PTP)*DCF(IN,IO,1)
      PDCF(IN,IO,4)=(PT/D)*DCF(IN,IO,1)
      PDCF(IN,IO,5)=DCF(IN,IO,3)
      PDCF(IN,IO,6)=(W1*PT+(W2/CY)*PTP+FT/1000)*DCF(IN,IO,1)+W1*A1
      PDCF(IN,IO,7)=PDCF(IN,IO,6)+(F12N/1000)*DCF(IN,IO,1)
      DO 20 J=1,7
   20 PDCF(IN,IO,J)=PDCF(IN,IO,J)*1.E+12
   40 CONTINUE
      RETURN
      END
C
C*************************************************************
C
      SUBROUTINE SPLICE
C
C*********************************************************************
C     THIS SUBROUTINE ACCOUNTS FOR THE POSSIBLE DIVISION OF A WASTE *
C     STREAM INTO SUB-STREAMS (MAXIMUM OF 3) BASED ON SELECTED WASTE *
C     SORTING OPTIONS AT A MUNICIPAL WASTE INCINERATOR.  IT ALSO    *
C     CALLS SUBROUTINES TO CALCULATE INCINERATION AND SORTING/      *
C     RECOVERY IMPACTS, AND ANY IMPACTS ASSOCIATED WITH RECYCLED    *
C*********************************************************************
C
      INCLUDE 'IMPCOMM.FOR'
      ISTR=1
C
C      DO METAL PACKAGE RECYCLING
C
      IF(ISPC(ISTR,3).NE.1.OR.ISPC(ISTR,4).EQ.0)GO TO 20
      CALL RECYCL(ISTR,0.,0.,0.,1)
```

```
   20 I1=IQ
      I2=ISPC(ISTR,5)
      IF(I2.EQ.1)RETURN
      I6=ISPC(ISTR,12)
      I7=ISPC(ISTR,13)
      I8=ISPC(ISTR,14)
      I9=ISPC(ISTR,15)
      IF(I2.GT.3)GO TO 30
C
C      SECTION BELOW FOR INCINERATE/DISPOSE AND SORTING OPTION 1
C
      CALL INCIMP(I1,I2,ISTR)
      WRF=2.0
      IF(IQ.EQ.1)WRF=OSWR
      BAS(ISTR,1)=BAS(ISTR,1)/WRF
      BAS(ISTR,2)=0.89
      BAS(ISTR,3)=BAS(ISTR,1)/BAS(ISTR,2)
      DO 24 J=8,92
   24 BAS(ISTR,J)=BAS(ISTR,J)*WRF
      ISPC(ISTR,1)=3
      ISPC(ISTR,2)=1
      ISPC(ISTR,3)=0
      ISPC(ISTR,5)=1
      RETURN
C
C      SECTION BELOW FOR SORTING OPTION 2
C
   30 A1=(0.95*I6+0.05*I7+0.05*I8+0.10*I9)/100.
      A2=(0.05*I6+0.05*I7+0.10*I8+0.90*I9)/100.
      A3=BAS(ISTR,1)
      NSTR=NSTR+1
      DO 32 J=1,92
   32 BAS(NSTR,J)=BAS(ISTR,J)
      DO 34 J=1,15
   34 ISPC(NSTR,J)=ISPC(ISTR,J)
      BASN(NSTR)=BASN(ISTR)
C
C      RESIDUE SECTION
C
      BAS(ISTR,1)=BAS(ISTR,1)/9.40
      BAS(ISTR,2)=.89
      BAS(ISTR,3)=BAS(ISTR,1)/BAS(ISTR,2)
      DO 36 J=8,92
   36 BAS(ISTR,J)=BAS(ISTR,J)*A1*9.40
      CALL INCIMP(I1,I2,ISTR)
      ISPC(ISTR,1)=3
      ISPC(ISTR,2)=1
      ISPC(ISTR,3)=0
      ISPC(ISTR,5)=1
      IF(I2.EQ.5) GO TO 40
C
C      DISCARD MATERIAL SECTION
C
      BAS(NSTR,1)=BAS(NSTR,1)*(1.-A1)
      BAS(NSTR,2)=0.62
      BAS(NSTR,3)=BAS(NSTR,1)/BAS(NSTR,2)
      BAS(NSTR,6)=0.
      BAS(NSTR,7)=0.
      ISPC(NSTR,1)=1
      ISPC(NSTR,2)=2
      ISPC(NSTR,3)=0
      ISPC(NSTR,5)=1
      RETURN
C
C      SECTION BELOW FOR SORTING OPTION 3
C
   40 BAS(NSTR,1)=BAS(NSTR,1)*A2
      BAS(NSTR,2)=0.84
      BAS(NSTR,3)=BAS(NSTR,1)/BAS(NSTR,2)
      BAS(NSTR,6)=0.
      BAS(NSTR,7)=0.
      ISPC(NSTR,1)=1
      ISPC(NSTR,2)=2
      ISPC(NSTR,3)=0
      ISPC(NSTR,5)=1
C
C      RECYCLE OF SCRAP METAL AND GLASS
C
```


000470

```
      IF(I7.EQ.0.AND.I8.EQ.0)RETURN
      A4=A3*(1.-A1-A2)
      A5=.9*I7+.85*I8
      WT1=.9*A4*I7/A5
      WT2=A4-WT1
      CALL RECYCL(ISTR,WT1,WT2,A3,2)
      RETURN
      END
C
C*****************************************************
C
      SUBROUTINE INCIMP(I1,I2,ISTR)
C
C*******************************************************************
C     THIS SUBROUTINE CALCULATES THE IMPACTS ASSOCIATED WITH THE     *
C     INCINERATION OF WASTE STREAMS.  IMPACTS ARE CALCULATED FOR     *
C     BOTH FACILITY WORKERS AND MEMBERS OF THE SURROUNDING           *
C     POPULATION.                                                    *
C*******************************************************************
C
      INCLUDE 'IMPCOMM.FOR'
      DIMENSION QT1(10),QT3(10),QT5(10)
C
C     BIMP(7) - OFFSITE POPULATION - INCINERATION IMPACTS
C     BIMP(8) - MAXIMUM INDIVIDUAL - INCINERATION IMPACTS
C     BIMP(9) - ALL WORKERS - INCINERATION IMPACTS
C     BIMP(10) - MAXIMUM WORKER - INCINERATION IMPACTS
C
      IF(I2.EQ.1)RETURN
      I4=ISPC(ISTR,1)
      FDS=1.0
      IF(I4.LT.3)FDS=10.**(I4-3)
      I4=ISPC(ISTR,2)
      FAC=1.0
      IF(I4.GT.1)FAC=10.**(1-I4)
C
C      SUM THE GENERIC IMPACT CONSTANTS
C
      CALL ZERO(QT1,10)
      CALL ZERO(QT3,10)
      CALL ZERO(QT5,10)
      DO 14 J=1,85
      IF(NUX(J).EQ.0)GO TO 14
      A1=FRACT(J,2)
      IF(I1.EQ.1.OR.I1.GT.3)A1=FRACT(J,1)
   10 DO 12 I=1,10
      QT1(I)=QT1(I)+BAS(ISTR,J+7)*PDCF(J,I,1)
      QT3(I)=QT3(I)+BAS(ISTR,J+7)*PDCF(J,I,3)*A1
   12 QT5(I)=QT5(I)+BAS(ISTR,J+7)*PDCF(J,I,5)
C
C      SUBSTRACT AIRBORNE RELEASE FRACTION
C
      BAS(ISTR,J+7)=BAS(ISTR,J+7)*(1.-A1)
   14 CONTINUE
C
C      START OFF-SITE IMPACT CALCULATIONS
C
      DO 20 I=1,10
      A1=QT3(I)*BAS(ISTR,1)
      BIMP(I,7)=BIMP(I,7)+A1*POP(IR)
   20 BIMP(I,8)=BIMP(I,8)+A1*XOQI(I1)*EDFI(I1)
      IF(I1.EQ.1)RETURN
C
C      START WORKER IMPACT CALCULATIONS
C
      A1=0.237*BAS(ISTR,1)/VINC(I1)
      ADSL=A1*TWI(I1,1)*FDS
      ADSM=A1*TWI(I1,2)*FDS
      ADSHRH=A1*TWI(I1,3)
      ADSHML=A1*TWI(I1,3)*0.5*(1.+FDS)
      A1=A1*FAC*1.5/DEN1(I1)
      ADGL=A1*DOFF(30.)
      ADGM=A1*DOFF(10.)
      ADGH=A1*DOFF(1.)
```

```
      DO 30 I=1,10
      A1=QT1(I)*ADSL+QT5(I)*ADGL
      A2=QT1(I)*ADSL+QT5(I)*ADGM
      A3=QT1(I)*ADSM+QT5(I)*ADGM
      A4=QT1(I)*ADSM+QT5(I)*ADGH
      A5=QT1(I)*ADSHRH+QT5(I)*ADGH
      A6=QT1(I)*ADSHML+QT5(I)*ADGH
C
C      SELECT THE MAXIMUM WORKER
C
      A7=AMAX1(A1,A2,A3,A4,A5,A6)
      IF(A7.GT.BIMP(I,10))BIMP(I,10)=A7
      GO TO (30,22,22,24,24),I1
   22 DUM=2.*A1+2.*A2+8.*A3+6.*A4+4.*A5+8.*A6
      IF(I2.EQ.3)DUM=DUM+2.*A3+A4
      IF(I2.EQ.4)DUM=DUM+3.*A3+A4+A6
      IF(I2.EQ.5)DUM=DUM+2.*A2+4.*A3+2.*A4+2.*A6
      GO TO 26
   24 DUM=6.*A1+2.*A2+4.*A3+2.*A4+2.*A5+2.*A6
   26 BIMP(I,9)=BIMP(I,9)+DUM
   30 CONTINUE
      RETURN
      END
C
C*************************************************************
C
      SUBROUTINE RECYCL(ISTR,WT1,WT2,WTOT,NX)
C
C*****************************************************************
C     THIS SUBROUTINE CALCULATES IMPACTS RESULTING FROM RECYCLE     *
C     OF CONTAMINATED MATERIALS.  THERE ARE AT PRESENT 3 RECYCLE    *
C     SCENARIOS CONSIDERED: RECYCLE OF METAL CONTAINERS; RECYCLE    *
C     OF THE METAL FRACTION OF THE WASTE STREAM COMPOSITION; AND    *
C     RECYCLE OF THE GLASS FRACTION.                                *
C*****************************************************************
C
      INCLUDE 'IMPCOMM.FOR'
      DIMENSION RI(85),RP(85)
      DATA RI/2.13E-05,3.41E-07,7.15E-02,1.96E-03,2.85E-04,1.92E-04,
     +        8.17E-04,2.95E-04,6.57E-02,1.07E-01,2.20E-02,7.30E-07,
     +        2.60E-02,3.95E-03,1.80E-02,8.20E-02,1.53E-06,3.80E-06,
     +        1.40E-02,1.22E-02,2.03E-03,1.71E-02,1.15E-04,6.25E-04,
     +        5.60E-02,5.10E-02,1.83E-04,1.26E-03,4.63E-07,4.08E-03,
     +        8.50E-03,6.10E-03,4.80E-02,8.89E-02,8.98E-04,8.36E-03,
     +        6.50E-02,5.91E-02,3.51E-04,1.40E-03,9.80E-05,6.56E-04,
     +        4.60E-02,2.40E-04,7.02E-02,1.90E-02,8.81E-04,7.38E-02,
     +        5.47E-04,1.54E-03,1.91E-03,3.72E-02,1.01E-02,8.24E-03,
     +        1.13E-01,6.56E+00,2.59E-02,2.99E+00,1.34E+00,5.89E+00,
     +        8.92E-01,9.97E-02,8.54E-02,1.57E-01,1.13E-01,1.03E-01,
     +        8.80E-04,2.71E-03,9.57E-02,1.62E-03,9.17E-01,1.23E-01,
     +        1.17E-01,1.10E-01,1.10E-01,1.19E-06,1.04E-01,1.09E+00,
     +        9.00E-02,9.21E-01,1.30E-01,4.92E-01,1.24E-01,1.08E-01,
     +        4.58E-03/
      DATA RP/2.95E+00,7.80E-01,1.23E+03,1.83E+01,2.66E+00,1.89E+00,
     .        2.26E+02,3.52E+00,2.77E+02,4.27E+00,1.31E+02,5.69E-01,
     .        6.93E+00,2.61E+01,1.00E+01,2.61E+03,4.66E+00,1.04E-01,
     .        6.52E+01,5.59E+01,1.89E+01,6.98E+01,6.39E-02,1.25E+02,
     .        2.48E+01,6.13E+03,1.71E+00,1.18E+01,1.87E+00,1.64E+01,
     .        2.22E+00,4.38E+01,1.46E+03,5.67E+02,8.42E+00,3.77E+01,
     .        7.81E+03,2.41E+02,1.45E+01,5.71E+00,1.18E+01,6.11E+00,
     .        6.01E+02,6.50E+01,2.82E+02,2.10E+03,8.21E+00,2.96E+02,
     .        5.08E+00,1.11E+01,2.70E+02,2.57E+03,4.05E+01,8.15E+00,
     .        4.21E-01,3.38E+02,3.97E+01,1.50E+03,1.35E+03,9.96E+02,
     .        1.38E+03,9.35E+00,8.00E+00,2.42E+02,9.25E+00,9.59E+00,
     .        6.24E+00,9.44E+02,8.95E+00,2.32E+02,1.54E+03,1.77E+00,
     .        9.81E+00,1.03E+01,1.03E+01,9.51E-04,9.68E+00,1.68E+03,
     .        1.36E+02,1.42E+03,3.67E-01,5.65E+02,6.94E+00,9.96E+00,
     .        1.02E+00/
      DATA PAKF,FIND,FPOP,DISF/1.E-3,0.33,0.46,0.9738/,
     .     WMET,WGLS/857.,90./
  101 FORMAT(/2X'METAL PACKAGE RECYCLE IMPACTS'3X'MAXIND ='
     *1PE9.2' MREM/YR'/34X'POPULN ='E9.2' PERSON-MREM/30YRS')
  102 FORMAT(/2X'METAL MATERIAL RECYCLE IMPACTS'2X'MAXIND ='
     *1PE9.2' MREM/YR'/34X'POPULN ='E9.2' PERSON-MREM/30YRS')
  103 FORMAT(/2X'GLASS MATERIAL RECYCLE IMPACTS'2X'MAXIND ='
     *1PE9.2' MREM/YR'/34X'POPULN ='E9.2' PERSON-MREM/30YRS')
      IF(NX.NE.1)GO TO 20
```

```
C
C      METAL PACKAGE RECYCLE
C
      IP=ISPC(ISTR,5)
      IF(IP.NE.1)FCORR=1./ISPC(ISTR,10)
      IF(IP.EQ.1)FCORR=1./ISPC(ISTR,11)
      A1=0.
      A2=0.
      DO 10 I=1,85
      IF(NUX(I).EQ.0)GO TO 10
      A1=A1+BAS(ISTR,I+7)*RI(I)
      A2=A2+BAS(ISTR,I+7)*RP(I)
   10 CONTINUE
      A3=0.01*ISPC(ISTR,4)*PAKF*BAS(ISTR,1)/0.0009
      A1=FIND*FCORR*A3*A1
      A2=FPOP*A3*A2
      WRITE(6,101) A1,A2
      RETURN
C
C     METAL FRACTION RECYCLE
C
   20 A1=0.
      A2=0.
      DO 30 I=1,85
      IF(NUX(I).EQ.0)GO TO 30
      A1=A1+BAS(NSTR,I+7)*RI(I)
      A2=A2+BAS(NSTR,I+7)*RP(I)
   30 CONTINUE
      A1=FIND*WT1*A1/(0.0009*ISPC(1,10))
      A2=FPOP*WT1*A2/0.0009
      WRITE(6,102) A1,A2
C
C     GLASS FRACTION RECYCLE
C
      FCORR=WT2/(ISPC(1,10)*WGLS)
      A1=0.
      A3=0.
      DO 40 I=1,85
      IF(NUX(I).EQ.0)GO TO 40
      A1=A1+BAS(NSTR,I+7)*PDCF(I,4,5)
      Y=EXM(AL(I))
      X=EXM(AL(I)*30.)
      Z=1.0
      IF(Y.NE.1.) Z=(1.-X)/(30.*(1.-Y))
      A3=A3+Z*BAS(NSTR,I+7)*PDCF(I,4,5)
   40 CONTINUE
      A2=0.3*DISF*1.6*.6936
      A1=FCORR*A2*A1*.0228
      A3=FCORR*A2*A3*ISPC(1,10)*52.
      WRITE(6,103) A1,A3
      RETURN
      END
C
C*************************************************************
C
      SUBROUTINE INTIMP
C
C*********************************************************************
C     THIS SUBROUTINE CALCULATES THE INADVERTANT INTRUDER IMPACTS    *
C     FOR THE CONSTRUCTION AND AGRICULTURE SCENARIOS.                *
C*********************************************************************
C
      INCLUDE 'IMPCOMM.FOR'
      DATA CONST/2.51E-5/
C
C     BIMP(1) - INTRUDER-CONSTRUCTION IMPACTS
C     BIMP(2) - INTRUDER-AGRICULTURE IMPACTS
C
      DO 60 ISTR=1,NSTR
      FDS=EMP(IQ)*BAS(ISTR,1)/VANN(IQ)
      IF(IQ.EQ.1)FDS=FDS*SEFF(IQ)
      A9=1.0
      IF(ISPC(ISTR,2).GT.1) A9=0.1
      GDEL=IINS
      DO 50 INUC=1,85
      IF(NUX(INUC).EQ.0)GO TO 50
      A1=FDS*A9*BAS(ISTR,INUC+7)
      CALL CHNS(INUC,GDEL,IEN,IBG,NCH)
```

```
      DO 40 I=1,10
      CALL CALI(INUC,I,C1,C2,C3,C4,IEN,IBG,NCH)
      A2=C1
      B5=RMIX(IQ)*A1*A2*0.27
      B2=A1*A2*0.057
      B1=A1*FSC(IR)*C2
      B3=RMIX(IQ)*A1*FSA(IR)*C3
      B4=RMIX(IQ)*0.5*A1*C4
      BIMP(I,1)=BIMP(I,1)+B1+B2
   40 BIMP(I,2)=BIMP(I,2)+B3+B4+B5
   50 CONTINUE
      A1=AL(57)*IINS
      A2=AL(62)*IINS
      RAD=BAS(ISTR,64)*EXM(A1)
      IF(A1.NE.A2)RAD=RAD+BAS(ISTR,69)*A1*(EXM(A1)-EXM(A2))/(A2-A1)
      RAD=RAD*FDS*CONST
      DO 55 I=1,10
   55 BIMP(I,2)=BIMP(I,2)+RAD*PDCF(56,I,2)
   60 CONTINUE
C
      RETURN
      END
C
C*************************************************************
C
      SUBROUTINE EXPWAS
C
C*********************************************************************
C     THIS SUBROUTINE CALCULATES THE IMPACTS FROM THE INTRUDER-      *
C     INITIATED AND EROSION INITIATED EXPOSED WASTE SCENARIOS.       *
C*********************************************************************
C
      INCLUDE 'IMPCOMM.FOR'
      COMMON/CHYN/NXUC(85),ICH(8,10),LCH(10),ACT(8),BCT(8,2)
C
C     BIMP(3) - INTRUDER-AIR IMPACTS
C     BIMP(4) - EROSION-AIR IMPACTS
C     BIMP(5) - INTRUDER-WATER IMPACTS
C     BIMP(6) - EROSION-WATER IMPACTS
C
      GREC=IINS
      GEROD=GERO(IQ)
      AREC=1.8E+3*RMIX(IQ)*EMP(IQ)
      IF(IQ.EQ.1)AREC=AREC*SEFF(IQ)
      AERO=ILFE*VANN(IQ)/(EMP(IQ)*EFF(IQ))
      FRA=19.75*EREC(IR)*POP(IR)*AREC
      FEA=19.75*EERO(IR)*POPE(IR)*AERO
      FRW=1.15E-4*POPW(IR)*AREC
      FEW=1.15E-4*POPW(IR)*AERO
      DO 40 ISTR=1,NSTR
      I9=ISPC(ISTR,2)
      A9=1.0
      IF(I9.GT.1) A9=10.**(1-I9)
      A2=BAS(ISTR,1)/VANN(IQ)
      DO 30 INUC=1,85
      IF(NUX(INUC).EQ.0)GO TO 30
      CALL CHNS(INUC,GREC,IEN,IBG,NCH)
      DO 12 I=1,8
   12 BCT(I,1)=ACT(I)
      CALL CHNS(INUC,GEROD,IEN,IBG,NCH)
      DO 14 I=1,8
   14 BCT(I,2)=ACT(I)
      A8=BAS(ISTR,INUC+7)
      B1=FRA*A2*A8*A9
      B2=FEA*A2*A8
      B3=FRW*A2*A8*A9
      B4=FEW*A2*A8
      DO 25 IORG=1,10
      CALL CALE(INUC,IORG,C1,C2,C3,C4,IEN,IBG,NCH)
      BIMP(IORG,3)=BIMP(IORG,3)+B1*C1
      BIMP(IORG,4)=BIMP(IORG,4)+B2*C2
      BIMP(IORG,5)=BIMP(IORG,5)+B3*C3
      BIMP(IORG,6)=BIMP(IORG,6)+B4*C4
   25 CONTINUE
   30 CONTINUE
   40 CONTINUE
      RETURN
      END
```

```
C
C*************************************************************
C
      SUBROUTINE OPSIMP
C
C*****************************************************************
C     THIS SUBROUTINE CALCULATES THE ON-SITE AND OFF-SITE IMPACTS    *
C     ASSOCIATED WITH DISPOSAL OPERATIONS.                           *
C*****************************************************************
C
      INCLUDE 'IMPCOMM.FOR'
C
C     BIMP(11) - OFFSITE POPULATION - OPERATIONAL IMPACTS
C     BIMP(12) - MAXIMUM OFFSITE INDIVIDUAL - OPERATIONAL IMPACTS
C     BIMP(13) - ALL WORKERS - OPERATIONAL IMPACTS
C     BIMP(14) - MAXIMUM WORKER - OPERATIONAL IMPACTS
C
      GO TO (10,20,20,30,30),IQ
C
C      START CALCULATION OF OFF-SITE RELEASES FROM ON-SITE FACILITY
C
   10 DIAM=SQRT(ADAY(IQ,1)/3.1415927)
      DO 16 ISTR=1,NSTR
      I5=ISPC(ISTR,1)
      FDS=1.
      IF(I5.LT.3)FDS=10.**(I5-3)
      IF(IQ.EQ.3)FDS=(1.+FDS)/2.
      A1=FDS*EMP(1)*0.237*TWO(1,3)*WVEL(IR)*2.*DIAM*3.
      A2=A1*BAS(ISTR,1)*3.15E+7/VANN(1)
      DO 14 I=1,10
      A3=0.
      DO 12 J=1,85
      IF(NUX(J).EQ.1)A3=A3+BAS(ISTR,J+7)*PDCF(J,I,3)
   12 CONTINUE
      BIMP(I,11)=BIMP(I,11)+A2*A3*POP(IR)
   14 BIMP(I,12)=BIMP(I,12)+A2*A3*XOQO(IQ)*EDFO(IQ)
   16 CONTINUE
      RETURN
C
C      START MUNICIPAL WASTE FACILITY IMPACTS
C
   20 DPOP=SQRT(ADAY(IQ,1)/3.1415927)
      DEQP=SQRT(ADAY(IQ,2)/3.1415927)
      DOTH=SQRT(ADAY(IQ,3)/3.1415927)
      DO 26 ISTR=1,NSTR
      I5=ISPC(ISTR,1)
      FDS=1.
      IF(I5.LT.3)FDS=10.**(I5-3)
      I9=ISPC(ISTR,2)
      FAC=1.
      IF(I9.GT.1)FAC=10.**(1-I9)
      AS1=FDS*EMP(IQ)*0.237*BAS(ISTR,1)/VANN(IQ)
      AS2=AS1*TWO(IQ,3)*WVEL(IR)*2.*DPOP*9.45E+7
      AG1=AS1*(FAC/FDS)*1.6/DEN2(IQ)
      DO 24 I=1,10
      A1=0.
      A2=0.
      A3=0.
      A5=0.
      DO 22 J=1,85
      IF(NUX(J).EQ.0)GO TO 22
      A1=A1+BAS(ISTR,J+7)*PDCF(J,I,1)
      A2=A2+BAS(ISTR,J+7)*PDCF(J,I,3)*FRACT(J,3)
      A3=A3+BAS(ISTR,J+7)*PDCF(J,I,3)
      A5=A5+BAS(ISTR,J+7)*PDCF(J,I,5)
   22 CONTINUE
C
C      OFF-SITE RELEASES
C
      BIMP(I,11)=BIMP(I,11)+AS2*A3*POP(IR)
      IF(IQ.EQ.3)BIMP(I,11)=BIMP(I,11)+BAS(ISTR,1)*A2*POP(IR)
      BIMP(I,12)=BIMP(I,12)+AS2*A3*XOQO(IQ)*EDFO(IQ)
      IF(IQ.EQ.3)BIMP(I,12)=BIMP(I,12)+BAS(ISTR,1)*A2*XOQO(IQ)*.119
C
C      WORKER EXPOSURES
C
```

```
      ADSL=AS1*TWO(IQ,1)
      ADSM=AS1*TWO(IQ,2)
      ADSH=AS1*TWO(IQ,3)
      ADGL=AG1*DOFF(50.)*COFF(50.,DOTH)
      ADGM=AG1*DOFF(30.)*COFF(30.,DOTH)
      ADGH=AG1*DOFF( 1.)*COFF( 1.,DEQP)
      ACOV=6.26E-2*AG1
      IF(IQ.EQ.3)ACOV=0.25*AG1*DEN2(IQ)/DEN2(2)
      B2=A1*ADSL+A5*(ADGM+ACOV)
      B4=A1*ADSM+A5*(ADGM+ACOV)
      B6=A1*ADSH+A5*(ADGH+ACOV)
      B7=2.*B2+4.*B4+2.*B6
      IF(IQ.EQ.2)B7=2.*B2+5.*B4+3.*B6
      BIMP(I,13)=BIMP(I,13)+B7/10.
      BIMP(I,14)=BIMP(I,14)+B7/10.
   24 CONTINUE
   26 CONTINUE
      RETURN
C
C      START HAZARDOUS WASTE FACILITY IMPACTS
C
   30 DPOP=SQRT(ADAY(IQ,1)/3.1415927)
      DEQP=SQRT(ADAY(IQ,2)/3.1415927)
      DOTH=SQRT(ADAY(IQ,3)/3.1415927)
      DO 38 ISTR=1,NSTR
      I5=ISPC(ISTR,1)
      FDS=1.
      IF(I5.LT.3)FDS=10.**(I5-3)
      I9=ISPC(ISTR,2)
      FAC=1.
      IF(I9.GT.1)FAC=10.**(1-I9)
      AS1=FDS*EMP(IQ)*0.237*BAS(ISTR,1)/VANN(IQ)
      AS2=AS1*EFAC(IR)*ADAY(IQ,2)*3.15E+1
      AS3=AS1*EFAC(IR)*ADAY(IQ,2)/(2.*DPOP*3.E+6*WVEL(IR)*DEN2(IQ))
      AG1=AS1*(FAC/FDS)*1.6/DEN2(IQ)
      AX1=BAS(ISTR,2)*2.6E-11*FDS*ISPC(ISTR,11)
      AX2=AX1*1.248*AXOQ(IR)
      DO 36 I=1,10
      A1=0.
      A2=0.
      A3=0.
      A5=0.
      DO 32 J=1,85
      IF(NUX(J).EQ.0)GO TO 32
      A1=A1+BAS(ISTR,J+7)*PDCF(J,I,1)
      A2=A2+BAS(ISTR,J+7)*PDCF(J,I,2)
      A3=A3+BAS(ISTR,J+7)*PDCF(J,I,3)
      A5=A5+BAS(ISTR,J+7)*PDCF(J,I,5)
   32 CONTINUE
      DIAM=DEQP
      IF(ISPC(ISTR,3).NE.0)DIAM=DOTH
      ADGL=AG1*DOFF(50.)*COFF(50.,DIAM)
      ADGM=AG1*DOFF(30.)*COFF(30.,DIAM)
      ADGH=AG1*DOFF( 1.)*COFF( 1.,DIAM)
      ACOV=2.49E-2*AG1
      IF(ISPC(ISTR,3).NE.0)GO TO 34
C
C      SECTION BELOW FOR UNPACKAGED WASTE
C
      BIMP(I,11)=BIMP(I,11)+AS2*A3*POP(IR)
      BIMP(I,12)=BIMP(I,12)+AS2*A3*XOQO(IQ)*EDFO(IQ)
      ADSL=AS3
      B1=A1*ADSL+A5*(ADGL+ACOV)
      B2=A1*ADSL+A5*(ADGM+ACOV)
      B3=A1*ADSL+A5*(ADGH+ACOV)
      B4=AMAX1(B1,B2,B3)
      BIMP(I,13)=BIMP(I,13)+14.*B1+15.*B2+29.*B3
      BIMP(I,14)=BIMP(I,14)+B4
      GO TO 36
C
C      SECTION BELOW FOR PACKAGED WASTE
C
   34 BIMP(I,12)=BIMP(I,12)+AX2*A2
      ADSL=AX1
      B1=A2*ADSL+A5*(ADGL+ACOV)
      B2=A2*ADSL+A5*(ADGM+ACOV)
      B3=A2*ADSL+A5*(ADGH+ACOV)
      B4=AMAX1(B1,B2,B3)
```

```
      BIMP(I,13)=BIMP(I,13)+14.*B1+15.*B2+29.*B3
      BIMP(I,14)=BIMP(I,14)+B4
   36 CONTINUE
   38 CONTINUE
      RETURN
      END
C
C*************************************************************
C
      SUBROUTINE GWATER(NTYM,TYMD)
C
C*****************************************************************
C     THIS SUBROUTINE CALCULATES THE IMPACTS RESULTING FROM      *
C     GROUNDWATER MIGRATION OF RADIOACTIVITY TO THREE BIOTA ACCESS *
C     LOCATIONS (INTRUDER-WELL, POPULATION-WELL AND SURFACE WATER). *
C*****************************************************************
C
      INCLUDE 'IMPCOMM.FOR'
      DIMENSION TYMD(16),RES(16,3)
      GDEL=IINS
      NSEC=10
      PERC=PRC(IR,IQ)*TSC(IR,IQ)
      TVOL=ILFE*VANN(IQ)*PRC(IR,IQ)/(EMP(IQ)*EFF(IQ))
      IF(TVOL.LT.7700.)TVOL=7700.
      NPTH=3
      IF(IR.EQ.3)NPTH=2
      DO 90 ISTR=1,NSTR
      A9=1.0
      IF(ISPC(ISTR,2).GT.1)A9=0.1
      I1=NRET(IR)-1
      TDUM=EMP(IQ)*EFF(IQ)*SEFF(IQ)/(PERC*A9)
      IF(I1.LE.0)I1=1
      DO 80 INUC=1,85
      IF(NUX(INUC).EQ.0)GO TO 80
      IF(BAS(ISTR,INUC+7).LT.1.E-14)GO TO 80
      TDUR=TDUM/FMF(INUC)
C
      CALL ZERO(RES,3*16)
      DO 30 IPTH=1,3
      A1=RET(INUC,I1)*TTM(IR,IPTH,IQ)+GDEL
      DO 20 ITYM=1,NTYM
      TYM=TYMD(ITYM)
      A2=TYMD(ITYM)-TDUR
      DO 10 ISEC=1,10
      B3=1.0/(A1+RET(INUC,I1)*(ISEC-1)*DTTM(IR,IQ))
      IF(TYM*1.1*B3.LT.1.0) GO TO 20
      B4=TPC(IR,IPTH,IQ)+(ISEC-1)*DTPC(IR,IQ)
      A3=0.5*ERFS(B3*TYM,B4)
      IF(A2.GT.0.0)A3=A3-0.5*ERFS(B3*A2,B4)
      IF(A3.LT.0.0)A3=0.0
   10 RES(ITYM,IPTH)=RES(ITYM,IPTH)+A3
   20 CONTINUE
   30 CONTINUE
C
      B1=BAS(ISTR,1)*BAS(ISTR,INUC+7)/TDUR
      DO 70 IPTH=1,NPTH
      K=14+(IPTH-1)*16
      B2=B1/(QFC(IR,IPTH)*NSEC)
      IF(TVOL.GT.QFC(IR,IPTH))B2=B2*QFC(IR,IPTH)/TVOL
      I2=6
      IF(IPTH.EQ.3)I2=7
      DO 60 ITYM=1,NTYM
      A3=EXM(AL(INUC)*TYMD(ITYM))
      DO 50 I=1,10
      A4=A3*RES(ITYM,IPTH)*B2*PDCF(INUC,I,I2)
   50 BIMP(I,K+ITYM)=BIMP(I,K+ITYM)+A4
   60 CONTINUE
   70 CONTINUE
   80 CONTINUE
   90 CONTINUE
      RETURN
      END
C
C*************************************************************
C
      SUBROUTINE OVRFLO
C
```

```
C*****************************************************************
C     THIS ROUTINE CALCULATES AND PRINTS RADIOLOGICAL IMPACTS    *
C     FOR THREE SCENARIOS WHICH MAY RESULT FROM LEACHATE ACCUMU- *
C     LATION AT A DISPOSAL FACILITY:                             *
C     1) DURING OPERATION OF THE FACILITY, ACCUMULATING LEACHATE *
C        IS REMOVED, TREATED, AND RELEASED TO A NEARBY STREAM.   *
C     2) AFTER CLOSURE, ACCUMULATING LEACHATE IS ALLOWED TO FILL *
C        UP THE DISPOSAL CELLS, OVERFLOW, AND REACH A NEARBY STREAM*
C     3) AFTER CLOSURE, ACCUMULATING LEACHATE IS REMOVED AND     *
C        PROCESSED THROUGH AN EVAPORATOR, THUS IMPACTING THE LOCAL *
C        POPULATION.                                             *
C*****************************************************************
C
      INCLUDE 'IMPCOMM.FOR'
      DIMENSION F1N(85),F2N(85)
      DATA F1N/85*1./,F2N/85*1./
      GDEL=LINS
      VTOT=ILFE*VANN(IQ)
      VL=PRC(IR,IQ)*VTOT/(EMP(IQ)*EFF(IQ))
      A8=ISPC(1,11)*4.5E6
      DO 30 ISTR=1,NSTR
      I9=ISPC(ISTR,2)
      A9=1.0
      IF(I9.GT.1) A9=0.1
      A4=A9*BAS(ISTR,1)*VL/VANN(IQ)
      DO 20 INUC=1,85
      IF(NUX(INUC).EQ.0)GO TO 20
      A7=1.
      A1=ILFE*(1.-EXM(AL(INUC)))
      IF(A1.GT.0.)A7=(1.-EXM(AL(INUC)*ILFE))/A1
      A5=A4*A7*BAS(ISTR,INUC+7)*FMF(INUC)
      A6=A5*EXM(AL(INUC)*GDEL)
      A1=A5*F1N(INUC)*TSC(IR,IQ)/A8
      A2=A6*F2N(INUC)/A8
      A3=A6*FRACT(INUC,2)*POP(IR)
      DO 10 I=1,10
      BIMP(I,63)=BIMP(I,63)+A1*PDCF(INUC,I,7)
      BIMP(I,64)=BIMP(I,64)+A2*PDCF(INUC,I,7)
   10 BIMP(I,65)=BIMP(I,65)+A3*PDCF(INUC,I,3)
   20 CONTINUE
   30 CONTINUE
      RETURN
      END
C
C*****************************************************************
C
      SUBROUTINE CHNS(INUC,GDEL,IEN,IBG,NCH)
C
C*****************************************************************
C     THIS ROUTINE IS IDENTICAL IN LOGIC WITH THE ACTDR SUBROUTINE *
C     OF THE MILDOS CODE.  FIRST, THE CHAIN MEMBERS ARE DETERMINED, *
C     THEN THE ACTDR CALCULATIONS ARE APPLIED.  HOWEVER, HERE, DUE *
C     TO SUBSTRACTIONS BETWEEN A LARGE AND A SMALL NUMBER, DOUBLE *
C     PRECISION IS USED TO INCREASE THE ACCURACY OF THE RESULTS.  *
C*****************************************************************
C
      COMMON/CHYN/NXUC(85),ICH(8,10),LCH(10),ACT(8)
     *      /NUCS/AL(85),FMF(85)
      REAL*8 Y,Z,DACT(8),HLM(8),EHLM(8)
      CALL ZERO(ACT,8)
      IF(NXUC(INUC).NE.0)GO TO 12
   10 ACT(1)=EXM(AL(INUC)*GDEL)
      RETURN
   12 DO 16 NCH=1,10
      IEN=LCH(NCH)
      DO 14 IBG=1,IEN
      IF(INUC.EQ.ICH(IBG,NCH))GO TO 18
   14 CONTINUE
   16 CONTINUE
      STOP 'CANT FIND NUCLIDE IN CHAINS'
   18 IF(IBG.EQ.IEN)GO TO 10
      IEND=IEN-IBG+1
      DO 20 I=1,IEND
      J=ICH(IBG+I-1,NCH)
      HLM(I)=AL(J)
      Y=HLM(I)*GDEL
      Z=0.
```

```
      IF(Y.LT.85.)Z=DEXP(-Y)
   20 EHLM(I)=Z
      DACT(1)=EHLM(1)
      DO 60 I=2,IEND
      Y=1.0
      DO 30 J=2,I
   30 Y=Y*HLM(J)
      DACT(I)=0.
      DO 50 K=1,I
      Z=EHLM(K)
      DO 40 J=1,I
      IF(K.NE.J)Z=Z/(HLM(J)-HLM(K))
   40 CONTINUE
      DACT(I)=DACT(I)+Z
   50 CONTINUE
      DACT(I)=DACT(I)*Y
      IF(DACT(I).LT.0.)DACT(I)=0.
   60 CONTINUE
      DO 70 I=1,IEND
   70 ACT(I)=DACT(I)
      RETURN
      END
C
C*****************************************************************
C
      SUBROUTINE CALI(INUC,IP,C1,C2,C3,C4,IEN,IBG,NCH)
C
C*****************************************************************
C     THIS ROUTINE OBTAINS THE C1,C2,C3,C4 COEFFICIENTS USED IN      *
C     THE INTRUDER IMPACT CALCULATIONS.  IF INUC IS NOT A MEMBER     *
C     OF A CHAIN, THEN THE SECTION BEFORE STATEMENT 15 IS USED.      *
C     OTHERWISE THE SECTION AFTER STATEMENT 15 IS USED.              *
C*****************************************************************
C
      INCLUDE 'IMPCOMM.FOR'
      COMMON/CHYN/NXUC(85),ICH(8,10),LCH(10),ACT(8)
      IF(NXUC(INUC).NE.0)GO TO 15
   10 A1=ACT(1)
      C1=A1*PDCF(INUC,IP,5)
      C2=A1*PDCF(INUC,IP,2)
      C3=A1*PDCF(INUC,IP,3)
      C4=A1*PDCF(INUC,IP,4)*FMF(INUC)
      RETURN
   15 IEND=IEN-IBG+1
      C1=0.
      C2=0.
      C3=0.
      C4=0.
      DO 20 I=1,IEND
      NN=ICH(IBG+I-1,NCH)
      C1=C1+ACT(I)*PDCF(NN,IP,5)
      C2=C2+ACT(I)*PDCF(NN,IP,2)
      C3=C3+ACT(I)*PDCF(NN,IP,3)
      C4=C4+ACT(I)*PDCF(NN,IP,4)*FMF(NN)
   20 CONTINUE
      RETURN
      END
C
C*****************************************************
C
      SUBROUTINE CALE(INUC,IP,C1,C2,C3,C4,IEN,IBG,NCH)
C
C*****************************************************************
C     THIS ROUTINE PERFORMS THE SAME FUNCTION AS SUBROUTINE "CALI",  *
C     ONLY NOW FOR SUBROUTINE "EXPWAS" RATHER THAN "INTIMP".  CHAIN  *
C     EFFECTS FOR INTRUDER- AND EROSION-INITIATED EXPOSED WASTE      *
C     SCENARIOS ARE CALCULATED IN THIS ROUTINE.                      *
C*****************************************************************
C
      INCLUDE 'IMPCOMM.FOR'
      COMMON/CHYN/NXUC(85),ICH(8,10),LCH(10),ACT(8),BCT(8,2)
      IF(NXUC(INUC).NE.0)GO TO 15
      C1=BCT(1,1)*PDCF(INUC,IP,3)
      C2=BCT(1,2)*PDCF(INUC,IP,3)
      C3=BCT(1,1)*PDCF(INUC,IP,7)
      C4=BCT(1,2)*PDCF(INUC,IP,7)
      RETURN
```

```
   15 IEND=IEN-IBG+1
      C1=0.
      C2=0.
      C3=0.
      C4=0.
      DO 20 I=1,IEND
      NN=ICH(IBG+I-1,NCH)
      C1=C1+BCT(I,1)*PDCF(NN,IP,3)
      C2=C2+BCT(I,2)*PDCF(NN,IP,3)
      C3=C3+BCT(I,1)*PDCF(NN,IP,7)
   20 C4=C4+BCT(I,2)*PDCF(NN,IP,7)
      RETURN
      END
C
C
C     UTILITY SUBROUTINES
C*****************************************************************
C     SUBROUTINE ZERO : INITIALIZES MATRICES AND ARRAYS THROUGHOUT  *
C                       THE CODE.                                   *
C                                                                   *
C     FUNCTION ERFS   : CALCULATES ERROR FUNCTION USED IN SUBROUTINE *
C                       "GWATER".  REFER TO MAIN REPORT, CHAPTER 6, *
C                       SECTION 6-3 (EQ. 6-29).                     *
C                                                                   *
C     FUNCTION POLY   : USED IN CALCULATING ERROR FUNCTION (ABOVE).  *
C                                                                   *
C     FUNCTION EXM    : CALCULATES NEGATIVE EXPONENTIALS.            *
C                                                                   *
C     FUNCTION COFF   : CORRECTION FACTOR USED IN TRANSPORTATION     *
C                       SECTION.  REFER TO MAIN REPORT, CHAPTER 3   *
C                       (EQ. 3-14).                                 *
C                                                                   *
C     FUNCTION DOFF   : DISTANCE FACTOR USED IN TRANSPORTATION       *
C                       SECTION.  REFER TO MAIN REPORT, CHAPTER 3   *
C                       (EQ. 3-11).                                 *
C                                                                   *
C     FUNCTION XOQFC  : CALCULATES ATMOSPHERIC X/Q FACTOR.           *
C                       USED IN SUBROUTINE "READ2".                 *
C                                                                   *
C     FUNCTION E1     : USED IN CALCULATION OF "COFF".  REFER TO     *
C                       MAIN REPORT, CHAPTER 3 (EQ.3-15).           *
C*****************************************************************
C
      SUBROUTINE ZERO(A,N)
      DIMENSION A(N)
      DO 10 I=1,N
   10 A(I)=0.
      RETURN
      END
C
      FUNCTION ERFS(A1,A2)
      A3=0.5*SQRT(A2/A1)
      A4=A3*(1.-A1)
      A5=A3*(1.+A1)
      IF(A4.GT.0)GO TO 10
      ERFS=2.+EXM(A4*A4)*(POLY(A5)-POLY(-A4))
      RETURN
   10 ERFS=EXM(A4*A4)*(POLY(A4)+POLY(A5))
      RETURN
      END
C
      FUNCTION POLY(X1)
      DATA A1,A2,A3,A4,A5,P/.254829592,-.284496736,1.421413741,
     *                      -1.453152027,1.061405429,.3275911/
      T1=1./(1.+P*X1)
      POLY=T1*(A1+T1*(A2+T1*(A3+T1*(A4+T1*A5))))
      RETURN
      END
C
      FUNCTION EXM(A1)
      A2=0.0
      IF(A1.LT.85.)A2=EXP(-A1)
      EXM=A2
      RETURN
      END
C
```

```
      FUNCTION COFF(X,R)
      DATA U/.0097/
      A1=E1(U*X)
      R1=SQRT(R*R+X*X)
      COFF=(A1-E1(U*R1))/A1
      RETURN
      END
C
      FUNCTION DOFF(X)
      DATA U/.0097/
      E2(Y)=EXP(-Y)*(1.-Y*EXP(Y)*E1(Y))
      B(R)=1.+.95*R+.35*R*R
      A1=B(U)
      A2=E2(U)
      DOFF=(B(U*X)*E2(U*X))/(A1*A2)
      RETURN
      END
C
      FUNCTION XOQFC(H,R,V,IS)
      DIMENSION A(6),B(6),C(6)
      DATA A/.2,.12,.08,.06,.03,.016/,B/2*0.,.0002,.0015,2*.0003/,
     *     C/2*0.,2*.5,2*1./
      SIGZ=A(IS)*R/((1.+B(IS)*R)**C(IS))
      XOQFC=2.032*EXP(-0.5*(H/SIGZ)*(H/SIGZ))/(V*R*SIGZ)
      RETURN
      END
C
      FUNCTION E1(X)
      DIMENSION A(5),AT(4),BT(4)
      DATA A0,A/-.57721566,.99999193,-.24991055,.05519968,
     +          -.00976004,.00107857/
      DATA AT/8.5733287401,18.0590169730,8.6347608925,0.2677737343/
      DATA BT/9.5733223454,25.6329561486,21.0996530827,3.9584969228/
      IF(X.GT.0..AND.X.LE.1.) GO TO 10
      IF(X.GT.1.) GO TO 30
      STOP 'E1 ARGUMENT NEGATIVE'
   10 E=0.
      XP=1.
      DO 20 I=1,5
      XP=XP*X
   20 E=E+A(I)*XP
      E1=(E+A0)-ALOG(X)
      RETURN
   30 ET=0.
      EB=0.
      XP=1.
      DO 40 I=1,4
      XP=XP*X
      IF(I.EQ.4) GO TO 50
      J=4-I
      ET=ET+AT(J)*XP
   40 EB=EB+BT(J)*XP
   50 E=(XP+ET+AT(4))/(XP+EB+BT(4))
      E1=E/(X*EXP(X))
      RETURN
      END
C
C*********************************************************************
C
```

```
      CHARACTER BASN*10,NUC*6,SOL*1
      COMMON/BAST/BAS(2,3),DMY(85,28),ISPC(2,15),PDCF(85,10,7)
     +      /CHRC/BASN(2),NUC(85),SOL(85)
     +      /DTNX/IR,IDAT,IQ,IPOP,ILFE,IINS,IOFL,NSTR,X(10)
     +      /NUCS/AL(85),FMF(85),RET(85,5),FRACT(85,3),DLC(10)
     +      /DRP1/FSC(3),FSA(3),PRC(3,5),TSC(3,5),QFC(3,3),
     +            DTTM(3,5),TTM(3,3,5),DTPC(3,5),TPC(3,3,5),NRET(3)
     +      /DRP2/TPOP(3),TDOZ(3),WVEL(3),EFAC(3),POP(3),
     +            POPE(3),POPW(3),AXOQ(3),EERO(5),EREC(5)
     +      /FACP/TDIS(5),TVEL(5),VINC(5),XOQI(5),EDFI(5),
     +            DEN1(5),VANN(5),XOQO(5),EDFO(5),DEN2(5),
     +            TWI(5,3),TWO(5,3),ADAY(5,3),RMIX(5),
     +            EMP(5),EFF(5),SEFF(5),GERO(5),OSWR
```

INVIMPS (Continued)

```
      PROGRAM INVIMPS
C
C*****************************************************************
C     THIS CODE IS THE INVERSE TO THE "IMPACTS" CODE USED IN THE  *
C     CALCULATION OF IMPACTS RESULTING FROM DISPOSAL OF DE MINIMIS *
C     WASTE STREAMS.  IN THIS CODE A SET OF ORGAN-SPECIFIC DOSE   *
C     LIMITATION CRITERIA ARE READ IN, AND MAXIMUM RADIONUCLIDE   *
C     CONCENTRATIONS ARE CALCULATED SO THAT THE DOSE LIMITATION   *
C     CRITERIA WOULD NOT BE EXCEEDED.                             *
C                                                                 *
C     THE INPUT/OUTPUT FILES ARE IDENTIFIED AS FOLLOWS:           *
C                                                                 *
C         TAPE1 = INPUT FILE CONTAINING THE BASIC DOSE CONVERSION *
C                 FACTOR INFORMATION.                             *
C                                                                 *
C         TAPE2 = INPUT FILE CONTAINING THE DEFAULT ENVIRONMENTAL, *
C                 TREATMENT, AND DISPOSAL PARAMETERS USED IN THIS *
C                 ANALYSIS.                                       *
C                                                                 *
C         TAPE4 = OUTPUT FILE CONTAINING DETAILED DATA ON THE     *
C                 MAXIMUM CONCENTRATIONS CALCULATED FOR EACH      *
C                 PATHWAY AND EACH ORGAN.  THE MINIMUM OVER THE   *
C                 ORGANS IS DETERMINED TO PRINT OUT IN THE        *
C                 CONDENSED OUTPUT FILE - TAPE6.                  *
C                                                                 *
C         TAPE5 = INPUT FILE CONTAINING THE WASTE STREAM CHARACTER- *
C                 ISTICS PERTAINING TO A SPECIFIC APPLICATION AND *
C                 THE SELECTED DOSE LIMITATION CRITERIA.          *
C                                                                 *
C         TAPE6 = OUTPUT FILE CONTAINING THE MAXIMUM RADIONUCLIDE *
C                 CONCENTRATIONS SO THAT THE DOSE LIMITATION      *
C                 CRITERIA WOULD NOT BE EXCEEDED.                 *
C*****************************************************************
C
      CHARACTER ORG(10)*9,SCN(28)*6,FAS(5)*20
      INCLUDE 'INVCOMM.FOR'
      COMMON/CHYN/NXUC(85),ICH(8,10),LCH(10),ACT(8),BCT(8,2)
     +      /UPTK/FK(21),FFD(4675)
      DIMENSION TYMD(16)
      DATA TYMD/20.,40.,60.,80.,100.,120.,160.,200.,400.,600.,
     .          800.,1000.,2000.,5000.,10000.,20000./
      DATA FAS/'GENERATOR FACILITY  ','SANITARY LANDFILL   ',
     .         'OPEN DUMP FACILITY  ','HAZARDOUS WASTE I   ',
     .         'HAZARDOUS WASTE II  '/
      DATA ORG/'  LUNGS  ',' S. WALL ',' LLI WALL',' T. BODY ',
     .         ' KIDNEYS ','  LIVER  ',' RED MAR ','   BONE  ',
     .         ' THYROID ','   ICRP  '/
      DATA SCN/'INT-CO','INT-AG','IN-WAT','ER-WAT','OP-IND','OP-MWR',
     .         'OF-OPS','OF-POP','TR-MAX','RC-MPK','INT-CO','INT-AG',
     .         'IN-WAT','ER-WAT','OP-IND','OP-MWR','LA-OPS','LA-OVF',
     .         'IC-IND','IC-MWR','INT-WL','POP-WL','POP-SW','INT-WL',
     .         'POP-WL','POP-SW','RC-MET','RC-GLS'/
      DATA NUC/'H-3   ','C-14  ','NA-22 ','P-32  ','P-33  ','S-35  ',
     .         'CL-36 ','CA-45 ','SC-46 ','CR-51 ','MN-54 ','FE-55 ',
     .         'FE-59 ','CO-57 ','CO-58 ','CO-60 ','NI-59 ','NI-63 ',
     .         'ZN-65 ','SE-75 ','RB-86 ','SR-85 ','SR-89 ','SR-90 ',
     .         'ZR-95 ','NB-94 ','NB-95 ','MO-99 ','TC-99 ','TC-99M',
     .         'RU-103','RU-106','AG-108','AG-110','CD-109','SN-113',
     .         'SN-126','SB-124','SB-125','I-125 ','I-129 ','I-131 ',
     .         'CS-134','CS-135','CS-136','CS-137','BA-140','LA-140',
     .         'CE-141','CE-144','EU-152','EU-154','YB-169','PB-210',
     .         'PO-210','RN-222','RA-226','RA-228','AC-227','TH-228',
     .         'TH-229','TH-230','TH-232','PA-231','U-232 ','U-233 ',
     .         'U-234 ','U-235 ','U-236 ','U-238 ','NP-237','PU-236',
     .         'PU-238','PU-239','PU-240','PU-241','PU-242','PU-244',
     .         'AM-241','AM-243','CM-242','CM-243','CM-244','CM-248',
     .         'CF-252'/
      DATA NTYM/16/
      DATA NXUC/27*0,1,0,1,16*0,1,6*0,1,0,3*1,3*0,24*1/
      DATA ICH/85,84,78,75,69,63,58,60,83,75,69,63,58,60, 0, 0,
     .         82,74,68,64,59, 0, 0, 0,81,73,67,62,57,56,54,55,
     .         80,74,68,64,59, 0, 0, 0,76,79,71,66,61, 0, 0, 0,
     .         77,70,67,62,57,56,54,55,72,65,60, 0, 0, 0, 0, 0,
     .         28,30,29, 0, 0, 0, 0, 0,47,48, 0, 0, 0, 0, 0, 0/
      DATA LCH/8,6,5,8,5,5,8,3,3,2/
      DATA FK/8.E-4,.01,.0483,7.65E-4,240.,.0037,.25,1.,1600.,
     .   190.,50.,95.,.3,50.,60.,370.,6.9,1.,8.5E-3,1000.,15./
```

```
      DATA FRACT/.9,.75,26*2.5E-3,4*.01,7*2.5E-3,3*.01,43*2.5E-3,
     .          .9,.75,26*5.0E-3,4*.01,7*5.0E-3,3*.01,43*5.0E-3,
     .          .9,.75,26*.019,4*.038,7*.019,3*.038,43*.019/
  101 FORMAT(8I3)
  102 FORMAT(1H1/2X,A20//2X'LIFE='I3,2X'OVFL='I3/
     *       2X'REGN='I3,2X'DATA='I3/2X'IPOP='I3,2X'INST='I3)
  104 FORMAT(2X,A6,1P,10E9.2)
  105 FORMAT(2X,A6,1P,8E9.2)
  106 FORMAT(//2X'SUMMARY OF MINIMUMS'/38X'SUBSTREAM-1'35X
     *'ALL WASTE'/9X,71('-'),1X,17('-')/10X,10(A6,3X))
  107 FORMAT(1H1/2X'SUMMARY OF MINIMUMS'/38X'SUBSTREAM-2'35X
     *'ALL WASTE'/9X,71('-'),1X,17('-')/10X,10(A6,3X))
  108 FORMAT(1H1/2X'SUMMARY OF MINIMUMS'/16X'SUBSTREAM-1'15X
     *'SUBSTREAM-2'/9X,26('-'),1X,26('-')/10X,8(A6,3X))
      DO 10 I=1,3
   10 FRACT(7,I)=FRACT(29,I)
   20 READ(5,101,END=50) IR,IDAT,IQ,IPOP,ILFE,IINS,IOFL,NSOL
      WRITE(6,102) FAS(IQ),ILFE,IOFL,IR,IDAT,IPOP,IINS
      CALL ZERO(DMY,2380)
      CALL READ2
      CALL READ5(NSOL)
      ODENS=BAS(1,2)
      CALL SPLICE
      CALL INTIMP
      CALL EXPWAS
      CALL OPSIMP
      IF(IOFL.NE.0)CALL OVRFLO
      CALL GWATER(NTYM,TYMD)
      CALL DIVVY(1,1,8)
      CALL DIVVY(1,11,18)
      CALL DIVVY(2,19,20)
      CALL DIVVY(1,21,26)
C
      DO 30 I=1,85
      DO 30 J=1,28
   30 DMY(I,J)=DMY(I,J)*ODENS
      WRITE(6,106) (SCN(I),I=1,10)
      WRITE(6,104) (NUC(I),(DMY(I,J),J=1,10),I=1,85)
      IF(NSTR.EQ.1)GO TO 40
      WRITE(6,107) (SCN(I),I=11,20)
      WRITE(6,104) (NUC(I),(DMY(I,J),J=11,20),I=1,85)
   40 WRITE(6,108) (SCN(I),I=21,28)
      WRITE(6,105) (NUC(I),(DMY(I,J),J=21,28),I=1,85)
      GO TO 20
   50 STOP 'NORMAL TERMINATION'
      END
C
C*************************************************************
C
      SUBROUTINE READ2
C
C*****************************************************************
C     THIS SUBROUTINE READS IN THE TREATMENT/DISPOSAL SITE        *
C     ENVIRONMENTAL CHARACTERISTICS AND TREATMENT/DISPOSAL        *
C     TECHNOLOGY CHARACTERISTICS FROM TAPE2.                      *
C*****************************************************************
C
      INCLUDE 'INVCOMM.FOR'
      DIMENSION PDS(6),WSP(6),STB(6),DSP(6)
  102 FORMAT(10E10.3)
  104 FORMAT(15I5)
  202 FORMAT(/2X'OPTIONAL XOQ PARAMS'/(2X,1P,4E10.3))
  203 FORMAT(2X,1P,6E10.3)
  204 FORMAT(/2X'OPTIONAL ENVIRONMENTAL PARAMETERS'/2X'PRC ='1PE9.2,
     .       2X'TSC ='E9.2,2X'QFC ='3E9.2/2X'FSC ='E9.2,2X'DTTM='E9.2,
     .       2X'TTM ='3E9.2/2X'FSA ='E9.2,2X'DTPC='E9.2,2X'TPC ='3E9.2/
     .       2X'WVEL='E9.2,2X'AXOQ='E9.2,2X'EFAC='E9.2)
  205 FORMAT(/2X'OPTIONAL FACILITY PARAMETERS'/2X'VINC='1PE9.2,
     .2X'VANN='E9.2,2X'ADAYS='3E9.2/2X'EMP ='E9.2,2X'EFF ='E9.2,
     .2X'SEFF='E9.2,2X'DEN1='E9.2,2X'DEN2='E9.2/
     .2X'RMIX='E9.2,2X'OSWR='E9.2,2X'OSDL='E9.2)
C
C     READ DEFAULT SITE ENVIRONMENTAL PARAMETER VALUES
C
      REWIND 2
```

```
      DO 10 I=1,3
      READ(2,102) (PRC(I,J),TSC(I,J),DTTM(I,J),(TTM(I,K,J),K=1,3),
     *            DTPC(I,J),(TPC(I,K,J),K=1,3),J=1,5)
      READ(2,102) FSC(I),FSA(I),(QFC(I,J),J=1,3),POP(I),POPE(I),
     *            POPW(I),TPOP(I),TDOZ(I),WVEL(I),AXOQ(I),EFAC(I),
     *            EERO(I),EREC(I)
      READ(2,104) NRET(I)
   10 CONTINUE
C
C     READ DEFAULT FACILTY PARAMETER VALUES
C
      DO 12 I=1,5
      READ(2,102) TDIS(I),TVEL(I),VINC(I),XOQI(I),EDFI(I),DEN1(I),
     *            VANN(I),XOQO(I),EDFO(I),DEN2(I),(TWI(I,J),J=1,3),
     *            (TWO(I,J),J=1,3),(ADAY(I,J),J=1,3),RMIX(I),
     *            EMP(I),EFF(I),SEFF(I),GERO(I)
   12 CONTINUE
C
C     START READING OPTIONAL PARAMETER VALUES
C
      IF(IQ.EQ.1.AND.IDAT.EQ.0)IDAT=2
      IF(IQ.EQ.1.AND.IDAT.EQ.1)IDAT=3
      IF(IDAT.EQ.0)GO TO 22
      IF(IDAT.EQ.2)GO TO 20
C
C      SITE-SPECIFIC POP AND XOQ OPTION
C
      DO 14 I=1,6
   14 READ(2,102) DSP(I),PDS(I),WSP(I),STB(I)
      WRITE(6,202) (DSP(I),PDS(I),WSP(I),STB(I),I=1,6)
      READ(2,102) HYTI,HYTO,DISTI,DISTO,EDFID,EDFOD
      WRITE(6,203) HYTI,HYTO,DISTI,DISTO,EDFID,EDFOD
      A1=0.
      A2=0.
      DO 16 I1=1,6
      A1=A1+STB(I1)*XOQFC(HYTI,DISTI,WSP(I1),I1)
      A2=A2+STB(I1)*XOQFC(HYTO,DISTO,WSP(I1),I1)
   16 CONTINUE
      XOQI(IQ)=A1
      XOQO(IQ)=A2
      EDFI(IQ)=EDFID
      EDFO(IQ)=EDFOD
      A1=0.
      DO 18 I1=1,6
      DO 18 I2=1,6
      A1=A1+PDS(I1)*STB(I2)*XOQFC(HYTI,DSP(I1),WSP(I2),I2)
   18 CONTINUE
      POP(IR)=A1
      POPE(IR)=3.*A1
   20 IF(IDAT.EQ.1)GO TO 22
C
C      SITE-SPECIFIC ENVIRONMENTAL PARAMETERS
C
      READ(2,102) PRC(IR,IQ),TSC(IR,IQ),DTTM(IR,IQ),
     +            (TTM(IR,J,IQ),J=1,3),DTPC(IR,IQ),(TPC(IR,J,IQ),J=1,3),
     +     FSC(IR),FSA(IR),(QFC(IR,J),J=1,3),WVEL(IR),AXOQ(IR),EFAC(IR)
      READ(2,104) NRET(IR)
      WRITE(6,204) PRC(IR,IQ),TSC(IR,IQ),(QFC(IR,J),J=1,3),
     *FSC(IR),DTTM(IR,IQ),(TTM(IR,J,IQ),J=1,3),FSA(IR),DTPC(IR,IQ),
     *(TPC(IR,J,IQ),J=1,3),WVEL(IR),AXOQ(IR),EFAC(IR)
   22 IF(IQ.NE.1)GO TO 24
C
C      SITE-SPECIFIC TREATMENT/DISPOSAL PARAMETERS
C
      READ(2,102) VINC(1),VANN(1),(ADAY(1,J),J=1,3),EMP(1),EFF(1),
     *            SEFF(1),DEN1(1),DEN2(1),RMIX(1),GERO(1),OSWR,OSDL
      TWO(1,3)=OSDL*1.E-6/DEN2(1)
      WRITE(6,205) VINC(1),VANN(1),(ADAY(1,J),J=1,3),EMP(1),EFF(1),
     *            SEFF(1),DEN1(1),DEN2(1),RMIX(1),GERO(1),OSWR,OSDL
   24 IF(IPOP.EQ.1.OR.IDAT.EQ.1.OR.IDAT.EQ.3)RETURN
C
C      MODIFY POP FOR URBAN ENVIRONMENT
C
      DO 26 I=1,3
      POPE(I)=POPE(I)*10.
   26 POP(I)=POP(I)*10.
      RETURN
      END
```

```
C
C*************************************************************
C
      SUBROUTINE READ5(NSOL)
C
C*********************************************************************
C     THIS ROUTINE READS IN THE WASTE STREAMS PHYSICAL CHARACTER-    *
C     ISTICS AND DOSE LIMITATION CRITERIA (TAPE5).  IT ALSO CALLS    *
C     SUBROUTINE "UPTAKE" TO INITIATE CALCULATION OF THE PATHWAY     *
C     DOSE CONVERSION FACTORS.  THIS SECTION THEN GOES ON TO         *
C     CALCULATE THE LIMITING CONCENTRATIONS FOR TRANSPORTATION.      *
C*********************************************************************
C
      INCLUDE 'INVCOMM.FOR'
  101 FORMAT(A10,3E10.3)
  102 FORMAT(15I5)
  103 FORMAT(5(A6,1X,A1,E10.3,2X))
  104 FORMAT(/2X'WASTE: 'A10,2X'WEIGHT:'1PE9.2' MT DENSITY:'
     *       E9.2' MT/M3'//2X'ID='I2,2X'IA='I2,2X'IK1='I2,2X'IK2='
     *       I3,2X'PROCESS='I2/2X'IXS='4I4/2X'ICS='4I4)
  105 FORMAT(10E10.3)
      NSTR=1
      CALL ZERO(BAS,6)
      READ(5,101) BASN(1),BAS(1,1),BAS(1,2),BAS(1,3)
      READ(5,102) (ISPC(1,J),J=1,15)
      READ(5,105) DLC
      WRITE(6,104) BASN(1),BAS(1,1),BAS(1,2),(ISPC(1,J),J=1,5),
     *             (ISPC(1,J),J=8,15)
C
   20 CALL UPTAKE(NSOL)
      IF(IQ.EQ.1)RETURN
C
C      TRANSPORTATION SECTION
C
C      DMY(9) - MAXIMUM DRIVER
C
      A1=ISPC(1,9)/100.
      DGA=BAS(1,2)/(A1*BAS(1,2)+DEN1(IQ)*(1.-A1))
      A3=BAS(1,1)/4.534
      IF(ISPC(1,3).NE.0)A3=A3/0.75
      A4=A3/(ISPC(1,8)*A1)
      IF(IQ.GT.3)GO TO 24
      A2=(COFF(1.,2.)*2.+COFF(1.,4.)*0.5)/8760.
      IF(A4.GT.750.)A4=750.
      A4=A4*1.6*A1*A2*DGA
      DO 22 I=1,85
      IF(PDCF(I,4,5).EQ.0.)GO TO 22
      DMY(I,9)=DLC(4)/(A4*PDCF(I,4,5))
   22 CONTINUE
      RETURN
   24 A2=(COFF(1.,2.)*5.+COFF(1.,4.)*0.5)/8760.
      IF(A4.GT.250.)A4=250.
      A4=A4*1.6*A1*A2*DGA
      DO 26 I=1,85
      IF(PDCF(I,4,5).EQ.0.)GO TO 26
      DMY(I,9)=DLC(4)/(A4*PDCF(I,4,5))
   26 CONTINUE
      RETURN
      END
C
C*************************************************************
C
      SUBROUTINE UPTAKE(NSOL)
C
C*********************************************************************
C     THIS SUBROUTINE READS IN (TAPE1) THE FUNDAMENTAL DOSE          *
C     CONVERSION FACTORS AND RELATED NUCLIDE-SPECIFIC PARAMETERS     *
C     AND UPTAKE FACTORS.  THE CALL TO SUBROUTINE "DOSE" INITIATES   *
C     CALCULATION OF THE PATHWAY DOSE CONVERSION FACTORS.            *
C*********************************************************************
C
      CHARACTER TNUC(159)*6,TSOL(159)*1,NUCD*6,SOLD*1
      INCLUDE 'INVCOMM.FOR'
      COMMON/UPTK/FK(21),FF(85,5),DCF(85,10,5)
      DIMENSION BAS2(159,20),BAS4(85,20),BAS3(85,10)
      CALL ZERO(FF,4675)
      REWIND 1
```

```
C
C     INHALATION/INGESTION DCF'S
C
      READ(1,103) (SOL(I),I=1,85)
      IF(NSOL.LE.0)GO TO 9
      DO 8 ISOL=1,NSOL
      READ(5,104) NUCD,SOLD
      DO 6 I=1,85
      IF(NUC(I).EQ.NUCD)GO TO 8
    6 CONTINUE
      STOP 'CANT FOR NUCLIDE NAME FOR SOLUBILITY CHANGE'
    8 SOL(I)=SOLD
    9 READ(1,101) A1
      READ(1,101) (TSOL(I),TNUC(I),(BAS2(I,J),J=1,10),I=1,159)
      READ(1,101) A1
      READ(1,101) (TSOL(I),TNUC(I),(BAS2(I,J),J=11,20),I=1,159)
      DO 50 INUC=1,85
      DO 10 I=1,159
      IF(NUC(INUC).EQ.TNUC(I))GO TO 20
   10 CONTINUE
      STOP 'CANT FIND NUCLIDE NAME INH/ING'
   20 IF(SOL(INUC).EQ.TSOL(I))GO TO 30
      I=I+1
      IF(TNUC(I).EQ.TNUC(I-1))GO TO 20
      STOP 'CANT FIND NUCLIDE SOLUBILITY'
   30 DO 40 J=1,10
      DCF(INUC,J,1)=BAS2(I,J)
   40 DCF(INUC,J,2)=BAS2(I,J+10)
   50 CONTINUE
      READ(1,101) A1
C
C     DIRECT GAMMA EXPOSURE DCF'S
C
      READ(1,102) (TNUC(I),(BAS4(I,J),J=1,10),I=1,85)
      READ(1,101) A1
      READ(1,102) (TNUC(I),(BAS4(I,J),J=11,20),I=1,85)
      READ(1,101) A1
      READ(1,102) (TNUC(I),(BAS3(I,J),J=1,10),I=1,85)
      DO 90 INUC=1,85
      DO 60 I=1,85
      IF(NUC(INUC).EQ.TNUC(I))GO TO 70
   60 CONTINUE
      STOP 'CANT FIND NUCLIDE NAME DCF-4/5'
   70 DO 80 J=1,10
      DCF(INUC,J,3)=BAS3(I,1)
      DCF(INUC,J,4)=BAS4(I,J)
   80 DCF(INUC,J,5)=BAS4(I,J+10)
C
C     STORE AL, FMF, AND FF, AND CALCULATE REMAINING RET'S
C
      AL(INUC)=BAS3(I,7)
      FMF(INUC)=BAS3(I,8)
      RET(INUC,1)=BAS3(I,9)
      RET(INUC,4)=BAS3(I,10)
      A2=RET(INUC,4)
      A1=(A2/RET(INUC,1))**0.334
      RET(INUC,5)=A2*A1
      RET(INUC,3)=A2/A1
      RET(INUC,2)=RET(INUC,1)*A1
      FF(INUC,1)=BAS3(I,2)
      FF(INUC,2)=BAS3(I,3)
      FF(INUC,3)=BAS3(I,4)
      FF(INUC,4)=BAS3(I,5)
      FF(INUC,5)=BAS3(I,6)
   90 CONTINUE
      CALL DOSE
  101 FORMAT(A1,1X,A6,1X,10E9.2)
  102 FORMAT(A6,3X,10E9.2)
  103 FORMAT(90A1)
  104 FORMAT(A6,1X,A1)
      RETURN
      END
C
C*************************************************************
C
      SUBROUTINE DOSE
C
```

```
C*****************************************************************
C     THIS SUBROUTINE CALCULATES THE PATHWAY DOSE CONVERSION      *
C     FACTORS USED IN DETERMINING THE IMPACTS IN THE REMAINDER OF *
C     THIS CODE.  INCORPORATED ARE 85 RADIONUCLIDES, 10 BODY ORGANS *
C     AND 7 MAJOR EXPOSURE PATHWAYS.  SEE APPENDIX D.             *
C*****************************************************************
C
      CHARACTER IPA9*6,IPA1*6,IPA5*6
      INCLUDE 'INVCOMM.FOR'
      COMMON/UPTK/V1,V2,S1,S2,Z,RI,R,CY,D,F2,F3,F5,F7,F8,F8P,
     +            F11,F13,F13P,F14,F15,F18,FF(85,5),DCF(85,10,5)
      DATA IPA9,IPA1,IPA5/'I-129 ','I-131 ','I-125 '/
      DO 40 IN=1,85
      PTP=F2+F3*(FF(IN,2)*F5+FF(IN,3)*F7*365.)
      PT=PTP*FF(IN,1)
      FT=F8*FF(IN,2)*F5+F8P*FF(IN,3)*F7*365.+F11
      F12N=FF(IN,4)*F13+FF(IN,5)*F13P
      V=V1
      IF(NUC(IN).EQ.IPA9)V=V2
      IF(NUC(IN).EQ.IPA1)V=V2
      IF(NUC(IN).EQ.IPA5)V=V2
      D1=86400.*V/(S2*Z)
      D2=86400.*R*V/S1
      W1=RI/(S2*Z)
      W2=R*RI/S1
      DO 40 IO=1,10
      A1=F18*(F14*(F15*DCF(IN,IO,2)+DCF(IN,IO,5))+DCF(IN,IO,4))
      PDCF(IN,IO,1)=F15*DCF(IN,IO,2)+DCF(IN,IO,5)+A1*D1
      PDCF(IN,IO,2)=F15*DCF(IN,IO,2)+DCF(IN,IO,5)+0.242*A1*D1
      PDCF(IN,IO,3)=PDCF(IN,IO,1)+(D1*PT+(D2/CY)*PTP)*DCF(IN,IO,1)
      PDCF(IN,IO,4)=(PT/D)*DCF(IN,IO,1)
      PDCF(IN,IO,5)=DCF(IN,IO,3)
      PDCF(IN,IO,6)=(W1*PT+(W2/CY)*PTP+FT/1000)*DCF(IN,IO,1)+W1*A1
      PDCF(IN,IO,7)=PDCF(IN,IO,6)+(F12N/1000)*DCF(IN,IO,1)
      DO 20 J=1,7
   20 PDCF(IN,IO,J)=PDCF(IN,IO,J)*1.E+12
   40 CONTINUE
      RETURN
      END
C
C*****************************************************************
C
      SUBROUTINE SPLICE
C
C*****************************************************************
C     THIS SUBROUTINE ACCOUNTS FOR THE POSSIBLE DIVISION OF A WASTE *
C     STREAM INTO SUB-STREAMS (MAXIMUM OF 3) BASED ON SELECTED    *
C     WASTE SORTING OPTIONS AT A MUNICIPAL WASTE INCINERATOR.     *
C     IT ALSO CALLS SUBROUTINES TO CALCULATE INCINERATION AND     *
C     SORTING/RECOVERY LIMITING CONCENTRATIONS, AND ANY LIMITING  *
C     CONCENTRATIONS NECESSARY FOR RECYCLED MATERIALS.            *
C*****************************************************************
C
      INCLUDE 'INVCOMM.FOR'
      ISTR=1
C
C      DO METAL PACKAGE RECYCLING
C
      IF(ISPC(ISTR,3).NE.1.OR.ISPC(ISTR,4).EQ.0)GO TO 20
      CALL RECYCL(ISTR,0.,0.,0.,1)
   20 I1=IQ
      I2=ISPC(ISTR,5)
      IF(I2.EQ.1)RETURN
C
      I6=ISPC(ISTR,12)
      I7=ISPC(ISTR,13)
      I8=ISPC(ISTR,14)
      I9=ISPC(ISTR,15)
      IF(I2.GT.3)GO TO 30
C
C      SECTION BELOW FOR INCINERATE/DISPOSE AND SORTING OPTION 1
C
      CALL INCIMP(I1,I2,ISTR)
      WRF=2.0
      IF(IQ.EQ.1)WRF=OSWR
      BAS(ISTR,1)=BAS(ISTR,1)/WRF
      BAS(ISTR,2)=0.89
      BAS(ISTR,3)=BAS(ISTR,1)/BAS(ISTR,2)
```


000488

```
      ISPC(ISTR,1)=3
      ISPC(ISTR,2)=1
      ISPC(ISTR,3)=0
      ISPC(ISTR,5)=1
      RETURN
C
C      SECTION BELOW FOR SORTING OPTION 2
C
   30 A1=(0.95*I6+0.05*I7+0.05*I8+0.10*I9)/100.
      A2=(0.05*I6+0.05*I7+0.10*I8+0.90*I9)/100.
      A3=BAS(ISTR,1)
      NSTR=NSTR+1
      DO 32 J=1,3
   32 BAS(NSTR,J)=BAS(ISTR,J)
      DO 34 J=1,15
   34 ISPC(NSTR,J)=ISPC(ISTR,J)
      BASN(NSTR)=BASN(ISTR)
C
C      RESIDUE SECTION
C
      BAS(ISTR,1)=BAS(ISTR,1)/9.40
      BAS(ISTR,2)=.89
      BAS(ISTR,3)=BAS(ISTR,1)/BAS(ISTR,2)
      CALL INCIMP(I1,I2,ISTR)
      ISPC(ISTR,1)=3
      ISPC(ISTR,2)=1
      ISPC(ISTR,3)=0
      ISPC(ISTR,5)=1
      IF(I2.EQ.5) GO TO 40
C
C      DISCARD MATERIAL SECTION
C
      BAS(NSTR,1)=BAS(NSTR,1)*(1.-A1)
      BAS(NSTR,2)=0.62
      BAS(NSTR,3)=BAS(NSTR,1)/BAS(NSTR,2)
      ISPC(NSTR,1)=1
      ISPC(NSTR,2)=2
      ISPC(NSTR,3)=0
      ISPC(NSTR,5)=1
      RETURN
C
C      SECTION BELOW FOR SORTING OPTION 3
C
   40 BAS(NSTR,1)=BAS(NSTR,1)*A2
      BAS(NSTR,2)=0.84
      BAS(NSTR,3)=BAS(NSTR,1)/BAS(NSTR,2)
      ISPC(NSTR,1)=1
      ISPC(NSTR,2)=2
      ISPC(NSTR,3)=0
      ISPC(NSTR,5)=1
C
C     RECYCLE OF SCRAP METAL AND GLASS
C
      IF(I7.EQ.0.AND.I8.EQ.0)RETURN
      A4=A3*(1.-A1-A2)
      A5=.9*I7+.85*I8
      WT1=.9*A4*I7/A5
      WT2=A4-WT1
      CALL RECYCL(ISTR,WT1,WT2,A3,2)
      RETURN
      END
C
C*************************************************
C
      SUBROUTINE INCIMP(I1,I2,ISTR)
C
C*****************************************************************
C     THIS SUBROUTINE CALCULATES THE LIMITING CONCENTRATIONS      *
C     ASSOCIATED WITH THE INCINERATION OF WASTE STREAMS.  LIMITS  *
C     ARE CALCULATED FOR MAXIMUM INDIVIDUAL AND MAXIMUM WORKER.   *
C*****************************************************************
C
      INCLUDE 'INVCOMM.FOR'
C
C     DMY(19) - MAXIMUM OFFSITE INDIVIDUAL-INCINERATION
C     DMY(20) - MAXIMUM WORKER-INCINERATION
C
```

```
      IF(I2.EQ.1)RETURN
      I4=ISPC(ISTR,1)
      FDS=1.0
      IF(I4.LT.3)FDS=10.**(I4-3)
      I4=ISPC(ISTR,2)
      FAC=1.0
      IF(I4.GT.1)FAC=10.**(1-I4)
C
C      OFF-SITE INDIVIDUAL
C
      WRITE(4,101)
      DO 20 J=1,35
      A1=FRACT(J,2)
      IF(I1.EQ.1.OR.I1.GT.3)A1=FRACT(J,1)
      CALL ZERO(X,10)
      DO 10 I=1,10
      A2=A1*BAS(ISTR,1)*XOQI(I1)*EDFI(I1)*PDCF(J,I,3)
      IF(A2.NE.0.)X(I)=DLC(I)/A2
   10 CONTINUE
      WRITE(4,103) NUC(J),X
      DMY(J,19)=AMX(X)
   20 CONTINUE
C
C      START WORKER IMPACT CALCULATIONS
C
      A1=0.237*BAS(ISTR,1)/VINC(I1)
      ADSHRH=A1*TWI(I1,3)
      ADGH=A1*FAC*1.6*DOFF(1.)/DEN1(I1)
      WRITE(4,102)
      DO 40 J=1,85
      CALL ZERO(X,10)
      DO 30 I=1,10
      A2=ADSHRH*PDCF(J,I,1)+ADGH*PDCF(J,I,5)
      IF(A2.NE.0.)X(I)=DLC(I)/A2
   30 CONTINUE
      WRITE(4,103) NUC(J),X
      DMY(J,20)=AMX(X)
   40 CONTINUE
  101 FORMAT(1H1/2X'OFF-SITE INDIVIDUAL LIMITS')
  102 FORMAT(1H1/2X'MAXIMUM WORKER LIMITS')
  103 FORMAT(2X,A6,1P,10E9.2)
      RETURN
      END
C
C*************************************************************
C
      SUBROUTINE RECYCL(ISTR,WT1,WT2,WTOT,NX)
C
C*******************************************************************
C     THIS ROUTINE CALCULATES LIMITING CONCENTRATIONS FOR RECYCLE    *
C     OF CONTAMINATED MATERIALS.  THERE ARE AT PRESENT 3 RECYCLE     *
C     SCENARIOS CONSIDERED: RECYCLE OF METAL CONTAINERS; RECYCLE     *
C     OF THE METAL FRACTION OF THE WASTE STREAM COMPOSITION; AND     *
C     RECYCLE OF THE GLASS FRACTION.                                 *
C*******************************************************************
C
      INCLUDE 'INVCOMM.FOR'
      DIMENSION RI(85)
      DATA RI/2.13E-05,3.41E-07,7.15E-02,1.96E-03,2.85E-04,1.92E-04,
     *        8.17E-04,2.95E-04,6.57E-02,1.07E-01,2.20E-02,7.30E-07,
     *        2.60E-02,3.95E-03,1.80E-02,8.20E-02,1.53E-06,3.80E-06,
     *        1.40E-02,1.22E-02,2.03E-03,1.71E-02,1.15E-04,6.25E-04,
     *        5.60E-02,5.10E-02,1.83E-04,1.26E-03,4.63E-07,4.08E-03,
     *        8.50E-03,6.10E-03,4.80E-02,8.89E-02,3.98E-04,8.36E-03,
     *        6.50E-02,5.91E-02,3.51E-04,1.40E-03,9.80E-05,6.56E-04,
     *        4.60E-02,2.40E-04,7.02E-02,1.90E-02,3.81E-04,7.38E-02,
     *        5.47E-04,1.54E-03,1.91E-03,3.72E-02,1.01E-02,8.24E-03,
     *        1.13E-01,6.56E+00,2.59E-02,2.99E+00,1.34E+00,5.89E+00,
     *        8.92E-01,9.97E-02,8.54E-02,1.57E-01,1.13E-01,1.03E-01,
     *        8.20E-04,2.71E-03,9.57E-02,1.62E-03,9.17E-01,1.23E-01,
     *        1.17E-01,1.10E-01,1.10E-01,1.19E-06,1.04E-01,1.09E+00,
     *        9.00E-02,9.21E-01,1.30E-01,4.92E-01,1.24E-01,1.08E-01,
     +        4.58E-03/
      DATA PAKF,FIND,FPOP,DISF/1.E-3,0.33,0.46,0.9738/,
     *     WMET,WGLS/857.,90./
      IF(NX.NE.1)GO TO 20
```


000490

```
C
C     DMY(10) - METAL PACKAGE LIMITS
C     DMY(27) - METAL FRACTION LIMITS
C     DMY(28) - GLASS FRACTION LIMITS
C
C      METAL PACKAGE RECYCLE
C
      IP=ISPC(ISTR,5)
      IF(IP.NE.1) FCORR=1./ISPC(ISTR,10)
      IF(IP.EQ.1) FCORR=1./ISPC(ISTR,11)
      DO 10 I=1,85
      A3=0.01*ISPC(ISTR,4)*PAKF*BAS(ISTR,1)/0.0009
      DMY(I,10)=DLC(1)/(FIND*FCORR*A3*RI(I))
   10 CONTINUE
      RETURN
C
C     RECYCLE METAL AND GLASS FRACTION OF WASTE STREAM
C
   20 FCOM=1./ISPC(1,10)
      FCOG=WT2/(ISPC(1,10)*WGLS)
      DO 30 I=1,85
      A1=FIND*WT1*FCOM*RI(I)/0.0009
      A2=.0228*.6936*0.3*1.6*DISF*FCOG*PDCF(I,4,5)
      DMY(I,27)=DLC(1)/A1
      IF(A2.NE.0.)DMY(I,28)=DLC(1)/A2
   30 CONTINUE
      RETURN
      END
C
C*************************************************************
C
      SUBROUTINE INTIMP
C
C*********************************************************************
C     THIS SUBROUTINE CALCULATES THE INADVERTANT INTRUDER LIMITING   *
C     CONCENTRATIONS FOR THE CONSTRUCTION AND AGRICULTURE SCENARIOS. *
C*********************************************************************
C
      INCLUDE 'INVCOMM.FOR'
      DATA CONST/2.51E-5/
C
C     DMY(1)&(11) - INTRUDER CONSTRUCTION LIMITS
C     DMY(2)&(12) - INTRUDER AGRICULTURE LIMITS
C
  101 FORMAT(1H1/2X'INTRUDER SCENARIO LIMITS FOR ISTR='I2)
  102 FORMAT(2X'CONS  'A6,1P,10E9.2)
  103 FORMAT(2X'AGRI  'A6,1P,10E9.2)
      DO 60 ISTR=1,NSTR
      WRITE(4,101) ISTR
      IDMY=(ISTR-1)*10+1
      FDS=EMP(IQ)*BAS(ISTR,1)/VANN(IQ)
      IF(IQ.EQ.1)FDS=FDS*SEFF(IQ)
      A9=1.0
      IF(ISPC(ISTR,2).GT.1) A9=0.1
      GDEL=IINS
      DO 50 INUC=1,85
      A1=FDS*A9
      CALL CHNS(INUC,GDEL,IEN,IBG,NCH)
      CALL ZERO(X,10)
      DO 30 I=1,10
      CALL CALI(INUC,I,C1,C2,C3,C4,IEN,IBG,NCH)
      B1=A1*FSC(IR)*C2+A1*C1*0.057
      IF(B1.NE.0.)X(I)=DLC(I)/B1
   30 CONTINUE
      WRITE(4,102) NUC(INUC),X
      DMY(INUC,IDMY)=AMX(X)
      CALL ZERO(X,10)
      DO 40 I=1,10
      CALL CALI(INUC,I,C1,C2,C3,C4,IEN,IBG,NCH)
      B1=RMIX(IQ)*A1*(FSA(IR)*C3+0.5*C4+0.27*C1)
      IF(B1.NE.0.)X(I)=DLC(I)/B1
   40 CONTINUE
      WRITE(4,103) NUC(INUC),X
      DMY(INUC,IDMY+1)=AMX(X)
   50 CONTINUE
   60 CONTINUE
      RETURN
      END
```

```
C
C*************************************************************
C
      SUBROUTINE EXPWAS
C
C*****************************************************************
C     THIS SUBROUTINE CALCULATES THE LIMITING CONCENTRATIONS FOR     *
C     THE INTRUDER-INITIATED AND EROSION-INITIATED EXPOSED WASTE     *
C     SCENARIOS.                                                     *
C*****************************************************************
C
      INCLUDE 'INVCOMM.FOR'
      COMMON/CHYN/NXUC(85),ICH(8,10),LCH(10),ACT(8),BCT(8,2)
C
C     DMY(3)&(13) - INTRUDER-WATER
C     DMY(4)&(14) - EROSION-WATER
C
  101 FORMAT(1H1/2X'EXPOSED WASTE LIMITS FOR ISTR='I2)
  102 FORMAT(2X'INT    'A6,1P,10E9.2)
  103 FORMAT(2X'ERO    'A6,1P,10E9.2)
      GREC=IINS
      GEROD=GERO(IQ)
      AREC=1.8E+3*RMIX(IQ)*EMP(IQ)
      IF(IQ.EQ.1)AREC=AREC*SEFF(IQ)
      AERO=ILFE*VANN(IQ)/(EMP(IQ)*EFF(IQ))
      FRW=1.15E-4*POPW(IR)*AREC
      FEW=1.15E-4*POPW(IR)*AERO
      DO 40 ISTR=1,NSTR
      WRITE(4,101) ISTR
      IDMY=3+(ISTR-1)*10
      I9=ISPC(ISTR,2)
      A9=1.0
      IF(I9.GT.1) A9=10.**(1-I9)
      A2=BAS(ISTR,1)/VANN(IQ)
      DO 30 INUC=1,85
      CALL CHNS(INUC,GREC,IEN,IBG,NCH)
      DO 12 I=1,8
   12 BCT(I,1)=ACT(I)
      CALL CHNS(INUC,GEROD,IEN,IBG,NCH)
      DO 14 I=1,8
   14 BCT(I,2)=ACT(I)
      B3=FRW*A2*A9
      B4=FEW*A2
      CALL ZERO(X,10)
      DO 16 I=1,10
      CALL CALE(INUC,I,C1,C2,C3,C4,IEN,IBG,NCH)
      IF(C3.NE.0.)X(I)=DLC(I)/(B3*C3)
   16 CONTINUE
      WRITE(4,102) NUC(INUC),X
      DMY(INUC,IDMY)=AMX(X)
      CALL ZERO(X,10)
      DO 18 I=1,10
      CALL CALE(INUC,I,C1,C2,C3,C4,IEN,IBG,NCH)
      IF(C4.NE.0.)X(I)=DLC(I)/(B4*C4)
   18 CONTINUE
      WRITE(4,103) NUC(INUC),X
      DMY(INUC,IDMY+1)=AMX(X)
   30 CONTINUE
   40 CONTINUE
      RETURN
      END
C
C*************************************************************
C
      SUBROUTINE OPSIMP
C
C*****************************************************************
C     THIS SUBROUTINE CALCULATES THE LIMITING CONCENTRATIONS         *
C     FOR ON-SITE AND OFF-SITE INDIVIDUALS DURING ROUTINE            *
C     DISPOSAL OPERATIONS.                                           *
C*****************************************************************
C
      INCLUDE 'INVCOMM.FOR'
C
C     DMY(5)&(15) - MAXIMUM OFFSITE INDIVIDUAL
C     DMY(6)&(16) - MAXIMUM WORKER
C
```

```
  101 FORMAT(1H1/2X'OPERATIONAL IMPACTS FOR ISTR='I2)
  102 FORMAT(2X'IND    'A6,1P,10E9.2)
  103 FORMAT(2X'WRK    'A6,1P,10E9.2)
      GO TO (10,20,20,30,30),IQ
C
C      START CALCULATION OF OFF-SITE RELEASES FROM ON-SITE FACILITY
C
   10 DIAM=SQRT(ADAY(IQ,1)/3.1415927)
      DO 16 ISTR=1,NSTR
      WRITE(4,101) ISTR
      IDMY=5+(ISTR-1)*10
      I5=ISPC(ISTR,1)
      FDS=1.
      IF(I5.LT.3)FDS=10.**(I5-3)
      IF(IQ.EQ.3) FDS=0.5*(1.+FDS)
      A1=FDS*EMP(1)*0.237*TWO(1,3)*WVEL(IR)*2.*DIAM*3.
      A2=A1*XOQO(IQ)*EDFO(IQ)*BAS(ISTR,1)*3.15E+7/VANN(1)
      DO 14 J=1,85
      CALL ZERO(X,10)
      DO 12 I=1,10
      IF(PDCF(J,I,3).NE.0.)X(I)=DLC(I)/(A2*PDCF(J,I,3))
   12 CONTINUE
      WRITE(4,102) NUC(J),X
      DMY(J,IDMY)=AMX(X)
   14 CONTINUE
   16 CONTINUE
      RETURN
C
C      START MUNICIPAL WASTE FACILITY IMPACTS
C
   20 DPOP=SQRT(ADAY(IQ,1)/3.1415927)
      DEQP=SQRT(ADAY(IQ,2)/3.1415927)
      DOTH=SQRT(ADAY(IQ,3)/3.1415927)
      DO 28 ISTR=1,NSTR
      WRITE(4,101) ISTR
      IDMY=5+(ISTR-1)*10
      I5=ISPC(ISTR,1)
      FDS=1.
      IF(I5.LT.3)FDS=10.**(I5-3)
      I9=ISPC(ISTR,2)
      FAC=1.
      IF(I9.GT.1)FAC=10.**(1-I9)
      AS1=FDS*EMP(IQ)*0.237*BAS(ISTR,1)/VANN(IQ)
      AS2=AS1*XOQO(IQ)*EDFO(IQ)*TWO(IQ,3)*WVEL(IR)*2.*DPOP*9.45E+7
      AG1=AS1*(FAC/FDS)*1.6/DEN2(IQ)
      IF(IQ.EQ.3)AG1=AG1*DEN2(IQ)/DEN2(2)
      DO 26 J=1,85
      CALL ZERO(X,10)
      DO 22 I=1,10
      A1=AS2*PDCF(J,I,3)
      IF(IQ.EQ.3)A1=A1+BAS(ISTR,1)*XOQO(IQ)*.119*PDCF(J,I,3)*FRACT(J,3)
      IF(A1.NE.0.)X(I)=DLC(I)/A1
   22 CONTINUE
      WRITE(4,102) NUC(J),X
      DMY(J,IDMY)=AMX(X)
      CALL ZERO(X,10)
      A1=AS1*TWO(IQ,3)
      A2=AG1*DOFF(1.)*COFF(1.,DEQP)
      IF(IQ.NE.3)A2=A2+AG1*0.0626
      IF(IQ.EQ.3)A2=A2+AG1*0.25
      DO 24 I=1,10
      A3=A1*PDCF(J,I,1)+A2*PDCF(J,I,5)
      IF(A3.NE.0.)X(I)=DLC(I)/A3
   24 CONTINUE
      WRITE(4,103) NUC(J),X
      DMY(J,IDMY+1)=AMX(X)
   26 CONTINUE
   28 CONTINUE
      RETURN
C
C      START HAZARDOUS WASTE FACILITY IMPACTS
C
   30 DPOP=SQRT(ADAY(IQ,1)/3.1415927)
      DEQP=SQRT(ADAY(IQ,2)/3.1415927)
      DOTH=SQRT(ADAY(IQ,3)/3.1415927)
```

```
      DO 38 ISTR=1,NSTR
      WRITE(4,101) ISTR
      IDMY=5+(ISTR-1)*10
      K=ISPC(ISTR,3)
      I5=ISPC(ISTR,1)
      FDS=1.
      IF(I5.LT.3)FDS=10.**(I5-3)
      I9=ISPC(ISTR,2)
      FAC=1.
      IF(I9.GT.1)FAC=10.**(1-I9)
      AS1=FDS*EMP(IQ)*0.237*BAS(ISTR,1)/VANN(IQ)
      AS2=AS1*XOQO(IQ)*EDFO(IQ)*EFAC(IR)*ADAY(IQ,2)*3.15E+1
      AS3=AS1*EFAC(IR)*ADAY(IQ,2)/(6.E+6*DPOP*WVEL(IR)*DEN2(IQ))
      AG1=AS1*(FAC/FDS)*1.6/DEN2(IQ)
      AX1=BAS(ISTR,2)*2.6E-11*FDS*ISPC(ISTR,11)
      AX2=AX1*1.248*AXOQ(IR)
      DO 36 J=1,85
      DIAM=DEQP
      IF(ISPC(ISTR,3).NE.0)DIAM=DOTH
      ADGH=AG1*DOFF( 1.)*COFF( 1.,DIAM)+2.49E-2*AG1
      CALL ZERO(X,10)
      DO 32 I=1,10
      IF(K.EQ.0)A1=AS2*PDCF(J,I,3)
      IF(K.NE.0)A1=AX2*PDCF(J,I,2)
      IF(A1.NE.0.)X(I)=DLC(I)/A1
   32 CONTINUE
      WRITE(4,102) NUC(J),X
      DMY(J,IDMY)=AMX(X)
      CALL ZERO(X,10)
      DO 34 I=1,10
      IF(K.EQ.0)A1=AS3*PDCF(J,I,1)+ADGH*PDCF(J,I,5)
      IF(K.NE.0)A1=AX1*PDCF(J,I,2)+ADGH*PDCF(J,I,5)
      IF(A1.NE.0.)X(I)=DLC(I)/A1
   34 CONTINUE
      WRITE(4,103) NUC(J),X
      DMY(J,IDMY+1)=AMX(X)
   36 CONTINUE
   38 CONTINUE
      RETURN
      END
C
C*************************************************************
C
      SUBROUTINE GWATER(NTYM,TYMD)
C
C*****************************************************************
C     THIS SUBROUTINE CALCULATES LIMITING RADIONUCLIDE CONCENTRA-  *
C     TIONS CONSIDERING GROUNDWATER MIGRATION OF RADIOACTIVITY TO  *
C     THREE BIOTA ACCESS LOCATIONS: INTRUDER-WELL, POPULATION-WELL, *
C     AND SURFACE WATER.                                           *
C*****************************************************************
C
      INCLUDE 'INVCOMM.FOR'
      DIMENSION TYMD(16),RES(16,3)
C
C      DMY(21)&(24) - INTRUDER-WELL LIMITS
C      DMY(22)&(25) - POPULATION WELL LIMITS
C      DMY(23)&(26) - POPULATION SURFACE WATER LIMITS
C
  101 FORMAT(1H1/2X'GROUNDWATER LIMITS FOR ISTR='I2)
  102 FORMAT(2X'I-WL  'A6,1P,10E9.2)
  103 FORMAT(2X'P-WL  'A6,1P,10E9.2)
  104 FORMAT(2X'P-SW  'A6,1P,10E9.2)
      GDEL=IINS
      NSEC=10
      PERC=PRC(IR,IQ)*TSC(IR,IQ)
      TVOL=ILFE*VANN(IQ)*PRC(IR,IQ)/(EMP(IQ)*EFF(IQ))
      IF(TVOL.LT.7700.)TVOL=7700.
      NPTH=3
      IF(IR.EQ.3) NPTH=2
      DO 90 ISTR=1,NSTR
      WRITE(4,101) ISTR
      IDMY=20+(ISTR-1)*3
      A9=1.0
      IF(ISPC(ISTR,2).GT.1)A9=0.1
      I1=NRET(IR)-1
      TDUM=EMP(IQ)*EFF(IQ)*SEFF(IQ)/(PERC*A9)
      IF(I1.LE.0)I1=1
```


000494

```
      DO 80 INUC=1,85
      TDUR=TDUM/FMF(INUC)
C
      CALL ZERO(RES,3*16)
      DO 30 IPTH=1,3
      A1=RET(INUC,I1)*TTM(IR,IPTH,IQ)+GDEL
      DO 20 ITYM=1,NTYM
      TYM=TYMD(ITYM)
      A2=TYMD(ITYM)-TDUR
      DO 10 ISEC=1,10
      B3=1.0/(A1+RET(INUC,I1)*(ISEC-1)*DTTM(IR,IQ))
      IF(TYM*1.1*B3.LT.1.0) GO TO 20
      B4=TPC(IR,IPTH,IQ)+(ISEC-1)*DTPC(IR,IQ)
      A3=0.5*ERFS(B3*TYM,B4)
      IF(A2.GT.0.0)A3=A3-0.5*ERFS(B3*A2,B4)
      IF(A3.LT.0.0)A3=0.0
   10 RES(ITYM,IPTH)=RES(ITYM,IPTH)+A3
   20 CONTINUE
   30 CONTINUE
C
      B1=BAS(ISTR,1)/TDUR
      DO 70 IPTH=1,NPTH
      K=14+(IPTH-1)*16
      B2=B1/(QFC(IR,IPTH)*NSEC)
      IF(TVOL.GT.QFC(IR,IPTH))B2=B2*QFC(IR,IPTH)/TVOL
      I2=6
      IF(IPTH.EQ.3)I2=7
      CALL ZERO(X,10)
      DO 60 I=1,10
      A6=1.E+20
      DO 50 ITYM=1,NTYM
      A3=EXM(AL(INUC)*TYMD(ITYM))
      A4=A3*RES(ITYM,IPTH)*B2*PDCF(INUC,I,I2)
      IF(A4.LT.1.E-16)GO TO 50
      A5=DLC(I)/A4
      IF(A6.GT.A5)A6=A5
   50 CONTINUE
      X(I)=A6
   60 CONTINUE
      IF(IPTH.EQ.1)WRITE(4,102) NUC(INUC),X
      IF(IPTH.EQ.2)WRITE(4,103) NUC(INUC),X
      IF(IPTH.EQ.3)WRITE(4,104) NUC(INUC),X
      DMY(INUC,IDMY+IPTH)=AMX(X)
   70 CONTINUE
   80 CONTINUE
   90 CONTINUE
      RETURN
      END
C
C*************************************************************
C
      SUBROUTINE OVRFLO
C
C*****************************************************************
C     THIS SUBROUTINE CALCULATES LIMITING RADIONUCLIDE CONCENTRA-   *
C     TIONS BASED ON INDIVIDUAL IMPACTS DETERMINED FOR TWO SCENARIOS *
C     WHICH MAY RESULT FROM LEACHATE ACCUMULATION AT A DISPOSAL     *
C     FACILITY:
C     1) DURING OPERATION OF THE FACILITY, ACCUMULATING LEACHATE    *
C        IS REMOVED, TREATED, AND RELEASED TO A NEARBY STREAM.      *
C     2) AFTER CLOSURE, ACCUMULATING LEACHATE IS ALLOWED TO FILL    *
C        UP THE DISPOSAL CELLS, OVERFLOW, AND REACH A NEARBY STREAM *
C*****************************************************************
C
      INCLUDE 'INVCOMM.FOR'
      DIMENSION F1N(85),F2N(85)
      DATA F1N/85*1./,F2N/85*1./
C
C     DMY(7)&(17) - OPERATIONAL LIMITS
C     DMY(8)&(18) - POST-OPERATIONAL LIMITS
C
  101 FORMAT(1H1/2X'OVERFLOW SURFACE WATER LIMITS FOR ISTR='I2)
  102 FORMAT(2X'OV-OP 'A6,1P,10E9.2)
  103 FORMAT(2X'OV-PO 'A6,1P,10E9.2)
      VTOT=ILFE*VANN(IQ)
      VL=PRC(IR,IQ)*VTOT/(EMP(IQ)*EFF(IQ))
      GDEL=IINS
      A8=ISPC(1,11)*4.5E6
```

```
      DO 50 ISTR=1,NSTR
      WRITE(4,101) ISTR
      IDMY=7+(ISTR-1)*10
      I9=ISPC(ISTR,2)
      A9=1.0
      IF(I9.GT.1) A9=0.1
      A4=A9*BAS(ISTR,1)*VL/VANN(IQ)
      DO 40 INUC=1,85
      A7=1.
      A1=ILFE*(1.-EXM(AL(INUC)))
      IF(A1.GT.0.) A7=(1.-EXM(AL(INUC)*ILFE))/A1
      A5=A4*A7*FMF(INUC)
      A6=A5*EXM(AL(INUC)*GDEL)
      A1=A5*F1N(INUC)*TSC(IR,IQ)/A8
      CALL ZERO(X,10)
      DO 20 I=1,10
      A2=A1*PDCF(INUC,I,7)
      IF(A2.NE.0.)X(I)=DLC(I)/A2
   20 CONTINUE
      WRITE(4,102) NUC(INUC),X
      DMY(INUC,IDMY)=AMX(X)
      A1=A6*F2N(INUC)/A8
      CALL ZERO(X,10)
      DO 30 I=1,10
      A2=A1*PDCF(INUC,I,7)
      IF(A2.NE.0.)X(I)=DLC(I)/A2
   30 CONTINUE
      WRITE(4,103) NUC(INUC),X
      DMY(INUC,IDMY+1)=AMX(X)
   40 CONTINUE
   50 CONTINUE
      RETURN
      END
C
C*************************************************************
C
      SUBROUTINE CHNS(INUC,GDEL,IEN,IBG,NCH)
C
C*********************************************************************
C     THIS ROUTINE IS IDENTICAL IN LOGIC WITH THE ACTDR SUBROUTINE   *
C     OF THE MILDOS CODE.  FIRST THE CHAIN MEMBERS ARE               *
C     DETERMINED, THEN THE ACTDR CALCULATIONS ARE APPLIED.           *
C     SMALL DIFFERENCES ARE DUE TO UTILIZATION OF DOUBLE PRECISION   *
C     TO INCREASE THE ACCURACY OF THE RESULTS.                       *
C*********************************************************************
C
      COMMON/CHYN/NXUC(85),ICH(8,10),LCH(10),ACT(8)
     *      /NUCS/AL(85),FMF(85)
      REAL*8 Y,Z,DACT(8),HLM(8),EHLM(8)
      CALL ZERO(ACT,8)
      IF(NXUC(INUC).NE.0)GO TO 12
   10 ACT(1)=EXM(AL(INUC)*GDEL)
      RETURN
   12 DO 16 NCH=1,10
      IEN=LCH(NCH)
      DO 14 IBG=1,IEN
      IF(INUC.EQ.ICH(IBG,NCH))GO TO 18
   14 CONTINUE
   16 CONTINUE
      STOP 'CANT FIND NUCLIDE IN CHAINS'
   18 IF(IBG.EQ.IEN)GO TO 10
      IEND=IEN-IBG+1
      DO 20 I=1,IEND
      J=ICH(IBG+I-1,NCH)
      HLM(I)=AL(J)
      Y=HLM(I)*GDEL
      Z=0.
      IF(Y.LT.85.)Z=DEXP(-Y)
   20 EHLM(I)=Z
      DACT(1)=EHLM(1)
      DO 60 I=2,IEND
      Y=1.0
      DO 30 J=2,I
   30 Y=Y*HLM(J)
      DACT(I)=0.
      DO 50 K=1,I
      Z=EHLM(K)
      DO 40 J=1,I
      IF(K.NE.J)Z=Z/(HLM(J)-HLM(K))
   40 CONTINUE
```


000436

```
      DACT(I)=DACT(I)+Z
   50 CONTINUE
      DACT(I)=DACT(I)*Y
      IF(DACT(I).LT.0.)DACT(I)=0.
   60 CONTINUE
      DO 70 I=1,IEND
   70 ACT(I)=DACT(I)
      RETURN
      END
C
C*****************************************************************
C
      SUBROUTINE CALI(INUC,IP,C1,C2,C3,C4,IEN,IBG,NCH)
C
C*****************************************************************
C     THIS ROUTINE OBTAINS THE C1,C2,C3,C4 COEFFICIENTS USED IN      *
C     THE INTRUDER IMPACT CALCULATIONS.  IF INUC IS NOT A MEMBER     *
C     OF A CHAIN THEN THE SECTION BEFORE STATEMENT 15 IS USED.       *
C     OTHERWISE THE SECTION AFTER STATEMENT 15 IS USED.              *
C*****************************************************************
C
      INCLUDE 'INVCOMM.FOR'
      COMMON/CHYN/NXUC(85),ICH(8,10),LCH(10),ACT(8)
      IF(NXUC(INUC).NE.0)GO TO 15
   10 A1=ACT(1)
      C1=A1*PDCF(INUC,IP,5)
      C2=A1*PDCF(INUC,IP,2)
      C3=A1*PDCF(INUC,IP,3)
      C4=A1*PDCF(INUC,IP,4)*FMF(INUC)
      RETURN
   15 IEND=IEN-IBG+1
      C1=0.
      C2=0.
      C3=0.
      C4=0.
      DO 20 I=1,IEND
      NN=ICH(IBG+I-1,NCH)
      C1=C1+ACT(I)*PDCF(NN,IP,5)
      C2=C2+ACT(I)*PDCF(NN,IP,2)
      C3=C3+ACT(I)*PDCF(NN,IP,3)
      C4=C4+ACT(I)*PDCF(NN,IP,4)*FMF(NN)
   20 CONTINUE
      RETURN
      END
C
C*****************************************************************
C
      SUBROUTINE CALE(INUC,IP,C1,C2,C3,C4,IEN,IBG,NCH)
C
C*****************************************************************
C     THIS ROUTINE PERFORMS THE SAME FUNCTION AS SUBROUTINE "CALI",  *
C     ONLY NOW FOR SUBROUTINE "EXPWAS" RATHER THAN "INTIMP".  CHAIN  *
C     EFFECTS FOR INTRUDER- AND EROSION-INITIATED EXPOSED WASTE      *
C     SCENARIOS ARE CALCULATED IN THIS ROUTINE.                      *
C*****************************************************************
C
      INCLUDE 'INVCOMM.FOR'
      COMMON/CHYN/NXUC(85),ICH(8,10),LCH(10),ACT(8),BCT(8,2)
      IF(NXUC(INUC).NE.0)GO TO 15
      C1=BCT(1,1)*PDCF(INUC,IP,3)
      C2=BCT(1,2)*PDCF(INUC,IP,3)
      C3=BCT(1,1)*PDCF(INUC,IP,7)
      C4=BCT(1,2)*PDCF(INUC,IP,7)
      RETURN
   15 IEND=IEN-IBG+1
      C1=0.
      C2=0.
      C3=0.
      C4=0.
      DO 20 I=1,IEND
      NN=ICH(IBG+I-1,NCH)
      C1=C1+BCT(I,1)*PDCF(NN,IP,3)
      C2=C2+BCT(I,2)*PDCF(NN,IP,3)
      C3=C3+BCT(I,1)*PDCF(NN,IP,7)
   20 C4=C4+BCT(I,2)*PDCF(NN,IP,7)
      RETURN
      END
C
C*****************************************************************
```

```
C
      SUBROUTINE DIVVY(MODE,N1,N2)
C
C*****************************************************************
C     THIS ROUTINE MULTIPLIES SELECTED LIMITS BY EITHER THE NUMBER  *
C     OF DISPOSAL FACILITIES OR BY THE NUMBER OF PROCESSING         *
C     FACILITIES (DEPENDING ON THE VALUE OF MODE).                  *
C*****************************************************************
C
      INCLUDE 'INVCOMM.FOR'
      IF(MODE.EQ.2)GO TO 20
      DO 10 I=1,85
      DO 10 J=N1,N2
      IF(DMY(I,J).LT.1.E+30)DMY(I,J)=DMY(I,J)*ISPC(1,11)
   10 CONTINUE
      RETURN
   20 DO 30 I=1,85
      DO 30 J=N1,N2
      IF(DMY(I,J).LT.1.E+30)DMY(I,J)=DMY(I,J)*ISPC(1,10)
   30 CONTINUE
      RETURN
      END
C
C
C     UTILITY SUBROUTINES
C*****************************************************************
C     SUBROUTINE ZERO : INITIALIZES MATRICES AND ARRAYS THROUGHOUT  *
C                       THE CODE.                                   *
C                                                                   *
C     FUNCTION AMX    : DETERMINES THE MINIMUM CONCENTRATION        *
C                       AMOUNG THE 10 ORGANS FOR EACH SCENARIO      *
C                       PATHWAY.  THIS VALUE IS THE MAXIMUM         *
C                       CONCENTRATION ALLOWABLE TO MEET THE         *
C                       DOSE LIMITATION CRITERIA.                   *
C                                                                   *
C     FUNCTION ERFS   : CALCULATES ERROR FUNCTION USED IN SUBROUTINE *
C                       "GWATER".  REFER TO MAIN REPORT, CHAPTER 6  *
C                       SECTION 6-3 (EQ. 6-29).                     *
C                                                                   *
C     FUNCTION POLY   : USED IN CALCULATING ERROR FUNCTION (ABOVE).  *
C                                                                   *
C     FUNCTION EXM    : CALCULATES NEGATIVE EXPONENTIALS.           *
C                                                                   *
C     FUNCTION COFF   : CORRECTION FACTOR USED IN TRANSPORTATION    *
C                       SECTION.  REFER TO MAIN REPORT, CHAPTER 3   *
C                       (EQ. 3-14).                                 *
C                                                                   *
C     FUNCTION DOFF   : DISTANCE FACTOR USED IN TRANSPORTATION      *
C                       SECTION.  REFER TO MAIN REPORT, CHAPTER 3   *
C                       (EQ. 3-11).                                 *
C                                                                   *
C     FUNCTION XOQFC  : CALCULATES ATMOSPHERIC X/Q FACTOR.          *
C                       USED IN SUBROUTINE "READ2".                 *
C                                                                   *
C     FUNCTION E1     : USED IN CALCULATION OF "COFF".  REFER TO    *
C                       MAIN REPORT, CHAPTER 3 (EQ.3-15).           *
C*****************************************************************
C
      SUBROUTINE ZERO(A,N)
      DIMENSION A(N)
      DO 10 I=1,N
   10 A(I)=0.
      RETURN
      END
C
      FUNCTION AMX(X)
      DIMENSION X(10),Y(10)
      DO 10 I=1,10
      Y(I)=X(I)
      IF(X(I).LT.1.E-30)Y(I)=1.E+38
   10 CONTINUE
      AMX=AMIN1(Y(1),Y(2),Y(3),Y(4),Y(5),Y(6),Y(7),Y(8),Y(9),Y(10))
      RETURN
      END
C
      FUNCTION ERFS(A1,A2)
      A3=0.5*SQRT(A2/A1)
      A4=A3*(1.-A1)
      A5=A3*(1.+A1)
```

```
      IF(A4.GT.0)GO TO 10
      ERFS=2.+EXM(A4*A4)*(POLY(A5)-POLY(-A4))
      RETURN
   10 ERFS=EXM(A4*A4)*(POLY(A4)+POLY(A5))
      RETURN
      END
C
      FUNCTION POLY(X1)
      DATA A1,A2,A3,A4,A5,P/.254829592,-.284496736,1.421413741,
     *                     -1.453152027,1.061405429,.3275911/
      T1=1./(1.+P*X1)
      POLY=T1*(A1+T1*(A2+T1*(A3+T1*(A4+T1*A5))))
      RETURN
      END
C
      FUNCTION EXM(A1)
      A2=0.0
      IF(A1.LT.85.)A2=EXP(-A1)
      EXM=A2
      RETURN
      END
C
      FUNCTION COFF(X,R)
      DATA U/.0097/
      A1=E1(U*X)
      R1=SQRT(R*R+X*X)
      COFF=(A1-E1(U*R1))/A1
      RETURN
      END
C
      FUNCTION DOFF(X)
      DATA U/.0097/
      E2(Y)=EXP(-Y)*(1.-Y*EXP(Y)*E1(Y))
      B(R)=1.+.95*R+.35*R*R
      A1=B(U)
      A2=E2(U)
      DOFF=(B(U*X)*E2(U*X))/(A1*A2)
      RETURN
      END
C
      FUNCTION XOQFC(H,R,V,IS)
      DIMENSION A(6),B(6),C(6)
      DATA A/.2,.12,.08,.06,.03,.016/,B/2*0.,.0002,.0015,2*.0003/,
     *     C/2*0.,2*.5,2*1./
      SIGZ=A(IS)*R/((1.+B(IS)*R)**C(IS))
      XOQFC=2.032*EXP(-0.5*(H/SIGZ)*(H/SIGZ))/(V*R*SIGZ)
      RETURN
      END
C
      FUNCTION E1(X)
      DIMENSION A(5),AT(4),BT(4)
      DATA A0,A/-.57721566,.99999193,-.24991055,.05519968,
     +          -.00976004,.00107857/
      DATA AT/8.5733287401,18.0590169730,8.6347608925,0.2677737343/
      DATA BT/9.5733223454,25.6329561486,21.0996530827,3.9584969228/
      IF(X.GT.0..AND.X.LE.1.) GO TO 10
      IF(X.GT.1.) GO TO 30
      STOP 'E1 ARGUMENT NEGATIVE'
   10 E=0.
      XP=1.
      DO 20 I=1,5
      XP=XP*X
   20 E=E+A(I)*XP
      E1=(E+A0)-ALOG(X)
      RETURN
   30 ET=0.
      EB=0.
      XP=1.
      DO 40 I=1,4
      XP=XP*X
      IF(I.EQ.4) GO TO 50
      J=4-I
      ET=ET+AT(J)*XP
   40 EB=EB+BT(J)*XP
   50 E=(XP+ET+AT(4))/(XP+EB+BT(4))
      E1=E/(X*EXP(X))
      RETURN
      END
```

**DWWWWWYYWYYYYYWWYWDYYYYYYYWWYYYYYWWWWDDDDDDDDWYYWWYWW*WWYYYYYYYYYYYYYYYYYYYYYYYYYYYY

INGESTION DCF'S (MREM/PCI)

* H-3	8.36E-08	1.08E-07	1.43E-07	8.30E-08	8.56E-08	8.28E-08	8.26E-08	6.56E-08	8.28E-08	8.98E-08
* C-14	8.49E-07	1.21E-06	1.46E-06	1.92E-06	1.06E-06	1.23E-06	3.38E-06	7.05E-06	8.89E-07	1.54E-06
D NA-22	2.57E-05	1.04E-05	1.35E-05	1.36E-05	1.49E-05	1.40E-05	1.95E-05	2.50E-05	1.21E-05	1.86E-05
D P-32	4.06E-06	3.00E-06	2.45E-05	4.70E-06	4.01E-06	4.02E-06	1.48E-05	2.70E-05	4.02E-06	7.51E-06
W P-32	4.06E-06	3.00E-06	2.45E-05	4.70E-06	4.01E-06	4.02E-06	1.48E-05	2.70E-05	4.02E-06	7.51E-06
D P-33	3.47E-07	6.73E-07	3.13E-06	1.11E-06	3.47E-07	3.47E-07	1.85E-06	4.88E-06	3.47E-07	9.18E-07
W P-33	3.47E-07	6.73E-07	3.13E-06	1.11E-06	3.47E-07	3.47E-07	1.85E-06	4.88E-06	3.47E-07	9.18E-07
D S-35	2.82E-07	4.92E-07	2.11E-06	4.47E-07	2.82E-07	2.82E-07	7.63E-11	2.82E-07	2.82E-07	4.48E-07
W S-35	2.82E-07	4.92E-07	2.11E-06	4.47E-07	2.82E-07	2.82E-07	7.63E-11	2.82E-07	2.82E-07	4.48E-07
D CL-36	2.96E-06	4.11E-06	2.96E-06	3.06E-06	2.96E-06	2.96E-06	2.96E-06	2.96E-06	2.96E-06	3.03E-06
W CL-36	2.96E-06	4.11E-06	2.96E-06	3.06E-06	2.96E-06	2.96E-06	2.96E-06	2.96E-06	2.96E-06	3.03E-06
W CA-45	1.98E-07	5.29E-07	1.04E-05	4.28E-06	1.98E-07	1.98E-07	1.28E-05	1.94E-05	1.98E-07	3.16E-06
Y SC-46	1.80E-07	2.53E-06	3.85E-05	5.73E-06	1.05E-06	7.47E-07	1.49E-06	5.14E-07	2.85E-08	6.40E-06
D CR-51	1.62E-08	6.70E-08	9.18E-07	1.39E-07	3.14E-08	2.59E-08	4.63E-08	2.91E-08	1.37E-08	1.32E-07
W CR-51	1.62E-08	6.70E-08	9.18E-07	1.39E-07	3.14E-08	2.59E-08	4.63E-08	2.91E-08	1.37E-08	1.32E-07
Y CR-51	1.62E-08	6.70E-08	9.18E-07	1.39E-07	3.14E-08	2.59E-08	4.63E-08	2.91E-08	1.37E-08	1.32E-07
D MN-54	2.32E-06	1.44E-06	7.99E-06	1.23E-06	1.46E-06	3.68E-06	1.76E-06	1.36E-06	4.64E-07	3.01E-06
W MN-54	2.32E-06	1.44E-06	7.99E-06	1.23E-06	1.46E-06	3.68E-06	1.76E-06	1.36E-06	4.64E-07	3.01E-06
W FE-55	7.10E-07	1.84E-08	7.08E-07	3.50E-07	6.44E-07	1.22E-06	6.41E-07	4.37E-07	6.32E-07	7.79E-07
Y FE-55	7.10E-07	1.84E-08	7.08E-07	3.50E-07	6.44E-07	1.22E-06	6.41E-07	4.37E-07	6.32E-07	7.79E-07
W FE-59	6.08E-06	3.33E-06	3.02E-05	2.94E-06	4.04E-06	5.65E-06	3.69E-06	3.09E-06	2.47E-06	7.56E-06
Y FE-59	6.08E-06	3.33E-06	3.02E-05	2.94E-06	4.04E-06	5.65E-06	3.69E-06	3.09E-06	2.47E-06	7.56E-06
W CO-57	2.98E-07	2.85E-07	4.56E-06	1.84E-07	2.12E-07	2.53E-07	3.57E-07	1.78E-07	1.10E-07	7.78E-07
Y CO-57	2.98E-07	2.85E-07	4.56E-06	1.84E-07	2.12E-07	2.53E-07	3.57E-07	1.78E-07	1.10E-07	7.78E-07
W CO-58	1.05E-06	1.35E-06	1.45E-05	7.65E-07	7.74E-07	7.73E-07	9.67E-07	4.58E-07	2.20E-07	3.10E-06
Y CO-58	1.05E-06	1.35E-06	1.45E-05	7.65E-07	7.74E-07	7.73E-07	9.67E-07	4.58E-07	2.20E-07	3.10E-06
W CO-60	8.62E-06	5.30E-06	4.02E-05	4.37E-06	5.67E-06	6.83E-06	5.42E-06	3.99E-06	3.10E-07	1.13E-05
Y CO-60	8.62E-06	5.30E-06	4.02E-05	4.37E-06	5.67E-06	6.83E-06	5.42E-06	3.99E-06	3.10E-07	1.13E-05
D NI-59	1.30E-07	1.52E-07	9.99E-07	2.10E-07	1.32E-07	1.32E-07	1.35E-07	1.34E-07	1.44E-07	2.10E-07
W NI-59	1.30E-07	1.52E-07	9.99E-07	2.10E-07	1.32E-07	1.32E-07	1.35E-07	1.34E-07	1.44E-07	2.10E-07
D NI-63	3.15E-07	3.89E-07	3.40E-06	5.77E-07	3.15E-07	3.15E-07	3.15E-07	3.15E-07	3.15E-07	5.77E-07
W NI-63	3.15E-07	3.89E-07	3.40E-06	5.77E-07	3.15E-07	3.15E-07	3.15E-07	3.15E-07	3.15E-07	5.77E-07
D ZN-65	2.84E-05	1.05E-05	1.51E-05	1.26E-05	1.69E-05	1.67E-05	1.73E-05	1.58E-05	1.12E-05	1.93E-05
W ZN-65	2.84E-05	1.05E-05	1.51E-05	1.26E-05	1.69E-05	1.67E-05	1.73E-05	1.58E-05	1.12E-05	1.93E-05
Y ZN-65	2.84E-05	1.05E-05	1.51E-05	1.26E-05	1.69E-05	1.67E-05	1.73E-05	1.58E-04	1.12E-05	1.93E-05
D SE-75	6.14E-06	8.07E-06	7.29E-06	1.02E-05	2.65E-05	2.12E-05	7.66E-06	6.29E-06	4.18E-06	9.62E-06
W SE-75	6.14E-06	8.07E-06	7.29E-06	1.02E-05	2.65E-05	2.12E-05	7.66E-06	6.29E-06	4.18E-06	9.62E-06
D RB-86	1.74E-05	3.29E-06	6.46E-06	1.00E-05	1.69E-05	1.69E-05	1.68E-05	1.67E-05	1.67E-05	1.71E-05
D SR-85	7.62E-07	1.14E-06	5.55E-06	1.86E-06	9.40E-07	8.03E-07	2.21E-06	2.24E-06	7.59E-07	1.98E-06
Y SR-85	6.18E-08	6.44E-07	6.73E-06	1.23E-06	2.86E-07	2.05E-07	4.81E-07	2.11E-07	3.01E-08	1.49E-06
D SR-89	8.55E-07	2.49E-06	8.67E-05	1.80E-06	8.55E-07	8.55E-07	5.23E-06	1.08E-05	8.55E-07	8.87E-06
Y SR-89	4.28E-08	2.49E-06	1.10E-04	4.87E-07	4.28E-08	4.28E-08	2.61E-07	5.38E-07	4.27E-08	9.17E-06
D SR-90	5.99E-06	8.76E-07	7.78E-05	9.45E-05	5.99E-06	5.71E-06	4.30E-04	8.60E-04	5.99E-06	8.75E-05
Y SR-90	3.00E-07	8.76E-07	9.60E-05	5.02E-06	3.00E-07	2.86E-07	2.15E-05	4.30E-05	3.00E-07	1.13E-05
W ZR-95	4.73E-07	1.31E-06	2.86E-05	5.45E-07	4.18E-07	2.95E-07	6.62E-07	3.30E-07	3.22E-08	3.75E-06
Y ZR-95	4.73E-07	1.31E-06	2.86E-05	5.45E-07	4.18E-07	2.95E-07	6.62E-07	3.30E-07	3.22E-08	3.75E-06
W NB-94	6.36E-07	2.85E-06	4.63E-05	7.14E-06	2.57E-06	1.04E-06	2.73E-06	2.83E-06	4.55E-07	7.14E-06
Y NB-94	6.36E-07	2.85E-06	4.63E-05	7.14E-06	2.57E-06	1.04E-06	2.73E-06	2.83E-06	4.55E-07	7.14E-06
Y NB-95	5.23E-07	1.03E-06	1.46E-05	5.04E-07	4.99E-07	3.17E-07	6.74E-07	3.22E-07	4.71E-08	2.58E-06
D MO-99	1.24E-06	2.00E-06	2.84E-06	1.18E-06	1.35E-05	2.27E-05	1.14E-06	1.84E-06	5.25E-07	3.20E-06
Y MO-99	1.76E-07	1.90E-06	5.00E-05	3.76E-07	7.88E-07	1.23E-06	2.51E-07	1.60E-07	1.36E-07	4.99E-06
D TC-99	3.17E-07	9.30E-07	3.20E-06	2.14E-07	4.58E-07	6.28E-07	3.22E-07	4.10E-07	1.41E-05	1.02E-06
W TC-99	3.17E-07	9.30E-07	3.20E-06	2.14E-07	4.58E-07	6.28E-07	3.22E-07	4.10E-07	1.41E-05	1.02E-06
D TC-99M	4.38E-08	1.30E-07	8.84E-08	1.54E-08	2.45E-08	2.76E-08	2.61E-08	1.63E-08	2.19E-07	5.78E-08
W TC-99M	4.38E-08	1.30E-07	8.84E-08	1.54E-08	2.45E-08	2.76E-08	2.61E-08	1.63E-08	2.19E-07	5.78E-08
Y RU-103	6.79E-07	1.01E-06	2.41E-05	5.29E-07	5.28E-07	4.67E-07	6.52E-07	3.96E-07	2.53E-07	3.11E-06
Y RU-106	8.51E-06	6.41E-06	2.60E-04	5.94E-06	8.25E-06	8.27E-06	8.31E-06	9.57E-06	8.06E-06	2.88E-05
D AG-108	2.23E-06	3.85E-06	2.84E-05	7.62E-06	3.92E-06	2.55E-05	2.45E-06	1.31E-06	4.81E-07	7.62E-06
W AG-108	2.23E-06	3.85E-06	2.84E-05	7.62E-06	3.92E-06	2.55E-05	2.45E-06	1.31E-06	4.81E-07	7.62E-06
Y AG-108	2.23E-06	3.85E-06	2.84E-05	7.62E-06	3.92E-06	2.55E-05	2.45E-06	1.31E-06	4.81E-07	7.62E-06
D AG-110	3.07E-06	5.55E-06	4.00E-05	1.08E-05	5.55E-06	3.19E-05	3.49E-06	1.82E-06	6.70E-07	1.08E-05
W AG-110	3.07E-06	5.55E-06	4.00E-05	1.08E-05	5.55E-06	3.19E-05	3.49E-06	1.82E-06	6.70E-07	1.08E-05

000500

TAPE1 (Continued)

Y AG-110	3.07E-06	5.55E-06	4.00E-05	1.08E-05	5.55E-06	3.19E-05	3.49E-06	1.82E-06	6.70E-07	1.08E-05
D CD-109	1.17E-06	1.51E-06	1.71E-05	1.82E-05	1.51E-04	2.73E-05	1.37E-06	1.21E-06	1.02E-06	1.31E-05
W CD-109	1.17E-06	1.51E-06	1.71E-05	1.82E-05	1.51E-04	2.73E-05	1.37E-06	1.21E-06	1.02E-06	1.31E-05
Y CD-109	1.17E-06	1.51E-06	1.71E-05	1.82E-05	1.51E-04	2.73E-05	1.37E-06	1.21E-06	1.02E-06	1.31E-05
D SN-113	9.40E-08	5.29E-07	2.93E-05	3.08E-06	2.04E-07	1.61E-07	6.59E-07	8.66E-07	7.99E-08	3.08E-06
W SN-113	9.40E-08	5.29E-07	2.93E-05	3.08E-06	2.04E-07	1.61E-07	6.59E-07	8.66E-07	7.99E-08	3.08E-06
D SN-126	2.22E-06	5.92E-06	1.60E-04	1.95E-05	3.03E-06	2.53E-06	1.01E-05	1.87E-05	2.04E-06	1.95E-05
W SN-126	2.22E-06	5.92E-06	1.60E-04	1.95E-05	3.03E-06	2.53E-06	1.01E-05	1.87E-05	2.04E-06	1.95E-05
D SB-124	6.11E-07	3.92E-06	7.88E-05	9.81E-06	1.35E-06	2.42E-06	2.28E-06	2.96E-06	4.37E-07	9.81E-06
W SB-124	2.00E-07	3.50E-06	8.62E-05	1.01E-05	9.44E-07	8.07E-07	1.41E-06	6.99E-07	6.51E-08	1.01E-05
D SB-125	2.23E-07	1.10E-06	2.14E-05	2.81E-06	4.18E-07	9.21E-07	8.36E-07	2.17E-06	1.71E-07	2.81E-06
W SB-125	5.03E-08	9.51E-07	2.33E-05	2.80E-06	2.43E-07	2.32E-07	4.48E-07	3.35E-07	2.06E-08	2.80E-06
D I-125	1.51E-07	2.52E-07	1.10E-07	5.59E-05	1.00E-07	1.09E-07	2.52E-07	2.45E-07	1.27E-03	3.85E-05
D I-129	8.21E-07	7.84E-08	6.70E-08	3.18E-06	7.02E-07	7.24E-07	9.42E-07	8.79E-07	7.80E-03	2.34E-04
D I-131	3.69E-07	1.14E-07	5.32E-08	9.08E-07	2.15E-07	2.45E-07	2.94E-07	3.32E-07	1.80E-03	5.45E-05
D CS-134	1.60E-04	4.99E-05	5.75E-05	6.84E-05	1.00E-04	1.00E-04	9.26E-05	8.86E-05	7.81E-05	1.12E-04
D CS-135	1.12E-05	2.40E-07	5.35E-07	6.61E-06	1.12E-05	1.12E-05	1.12E-05	1.30E-05	1.13E-05	1.13E-05
D CS-136	2.14E-05	8.44E-06	1.01E-05	9.05E-06	1.32E-05	1.36E-05	1.20E-05	1.08E-05	9.55E-06	1.41E-05
D CS-137	1.00E-04	2.18E-05	2.59E-05	4.91E-05	7.73E-05	7.87E-05	7.38E-05	7.99E-05	6.72E-05	8.19E-05
D BA-140	9.18E-07	2.10E-06	9.95E-05	1.11E-06	6.05E-07	4.68E-07	1.34E-06	1.26E-06	3.97E-07	9.64E-06
W LA-140	9.39E-07	4.04E-06	6.58E-05	1.04E-06	8.10E-07	5.90E-07	1.02E-06	3.52E-07	2.27E-08	8.62E-06
Y CE-141	4.92E-08	8.22E-07	3.18E-05	1.72E-07	4.68E-08	4.11E-08	1.22E-07	3.98E-08	3.74E-10	2.89E-06
W CE-141	4.92E-08	8.22E-07	3.18E-05	1.72E-07	4.68E-08	4.11E-08	1.22E-07	3.98E-08	3.74E-10	2.89E-06
D CE-141	4.92E-08	8.22E-07	3.18E-05	1.72E-07	4.68E-08	4.11E-08	1.22E-07	3.98E-08	3.74E-10	2.89E-06
Y CE-144	3.49E-08	2.05E-06	4.28E-05	3.03E-07	1.04E-07	7.59E-08	1.37E-07	1.47E-07	4.41E-09	2.09E-05
W CE-144	3.49E-08	2.05E-06	4.28E-05	3.03E-07	1.04E-07	7.59E-08	1.37E-07	1.47E-07	4.41E-09	2.09E-05
D CE-144	3.49E-08	2.05E-06	4.28E-05	3.03E-07	1.04E-07	7.59E-08	1.37E-07	1.47E-07	4.41E-09	2.09E-05
W EU-152	8.88E-07	2.39E-06	3.70E-05	6.48E-06	1.72E-06	1.11E-05	3.40E-06	7.73E-06	2.46E-07	6.48E-06
W EU-154	7.99E-07	3.03E-06	6.66E-05	9.55E-06	1.66E-06	1.37E-05	4.26E-06	1.65E-05	2.11E-07	9.55E-06
W YB-169	1.80E-08	9.66E-07	2.63E-05	3.12E-06	1.81E-07	1.24E-07	6.14E-07	2.71E-07	1.36E-09	3.00E-06
Y YB-169	1.80E-08	9.66E-07	2.63E-05	3.12E-06	1.81E-07	1.24E-07	6.14E-07	2.71E-07	1.36E-09	3.00E-06
W PB-210	3.00E-04	1.95E-07	2.03E-05	1.70E-03	9.40E-04	1.40E-03	1.00E-03	9.60E-03	3.00E-04	7.77E-04
W PO-210	5.20E-04	4.54E-06	1.80E-04	4.10E-04	9.30E-03	1.60E-03	5.40E-04	2.40E-04	5.20E-04	2.04E-03
D PO-210	5.20E-04	4.54E-06	1.80E-04	4.10E-04	9.30E-03	1.60E-03	5.40E-04	2.40E-04	5.20E-04	2.04E-03
* RN-222	0.00E+00	0.00E+00	0.00E+00	0.00E+00	0.00E+00	0.00E+00	0.00E+00	0.00E+00	0.00E+00	0.00E+00
W RA-226	5.90E-04	5.37E-06	3.30E-04	3.40E-03	5.90E-04	5.90E-04	2.20E-03	2.00E-02	5.90E-04	1.38E-03
W RA-228	4.10E-04	2.34E-06	7.14E-05	1.70E-03	4.00E-04	4.00E-04	1.30E-03	9.80E-03	4.00E-04	7.89E-04
Y AC-227	1.10E-04	3.73E-07	2.48E-05	1.30E-03	2.00E-03	1.60E-02	1.00E-02	1.00E-01	1.10E-04	5.52E-03
W AC-227	1.10E-04	3.73E-07	2.48E-05	1.30E-03	2.00E-03	1.60E-02	1.00E-02	1.00E-01	1.10E-04	5.52E-03
Y TH-228	7.50E-06	4.91E-06	4.70E-04	3.80E-05	7.88E-06	2.34E-05	3.80E-04	4.10E-03	7.42E-06	2.10E-04
W TH-228	7.50E-06	4.91E-06	4.70E-04	3.80E-05	7.88E-06	2.34E-05	3.80E-04	4.10E-03	7.42E-06	2.10E-04
Y TH-229	1.01E-05	4.88E-06	2.10E-04	2.30E-04	9.44E-06	3.64E-05	2.60E-03	3.20E-02	9.39E-06	1.29E-03
W TH-229	1.01E-05	4.88E-06	2.10E-04	2.30E-04	9.44E-06	3.64E-05	2.60E-03	3.20E-02	9.39E-06	1.29E-03
Y TH-230	4.56E-06	4.03E-06	1.80E-04	9.24E-05	4.31E-06	2.18E-05	1.00E-03	1.60E-02	4.56E-06	6.29E-04
W TH-230	4.56E-06	4.03E-06	1.80E-04	9.24E-05	4.31E-06	2.18E-05	1.00E-03	1.60E-02	4.56E-06	6.29E-04
Y TH-232	3.97E-06	3.47E-06	1.50E-04	9.63E-05	3.75E-06	1.88E-05	1.10E-03	1.80E-02	3.94E-06	6.92E-04
W TH-232	3.97E-06	3.47E-06	1.50E-04	9.63E-05	3.75E-06	1.88E-05	1.10E-03	1.80E-02	3.94E-06	6.92E-04
Y PA-231	2.20E-04	4.70E-06	1.90E-04	2.10E-03	3.60E-03	2.80E-02	1.50E-02	1.78E-01	2.20E-04	9.55E-03
W PA-231	2.20E-04	4.70E-06	1.90E-04	2.10E-03	3.60E-03	2.80E-02	1.50E-02	1.78E-01	2.20E-04	9.55E-03
Y U-232	1.30E-06	4.66E-06	2.00E-04	8.40E-05	1.30E-04	1.15E-06	7.10E-04	7.80E-03	1.21E-06	3.45E-04
W U-232	3.24E-05	6.42E-06	2.00E-04	2.10E-03	3.30E-03	2.86E-05	1.80E-02	1.95E-01	3.02E-05	8.19E-03
D U-232	3.24E-05	6.42E-06	2.00E-04	2.10E-03	3.30E-03	2.86E-05	1.80E-02	1.95E-01	3.02E-05	8.19E-03
Y U-233	6.95E-07	4.18E-06	1.80E-04	2.40E-05	6.78E-05	6.06E-07	9.60E-06	1.40E-04	6.39E-07	2.53E-05
W U-233	1.74E-05	5.51E-06	1.70E-04	5.80E-04	1.70E-03	1.51E-05	2.40E-04	3.50E-03	1.60E-05	2.61E-04
D U-233	1.74E-05	5.51E-06	1.70E-04	5.80E-04	1.70E-03	1.51E-05	2.40E-04	3.50E-03	1.60E-05	2.61E-04
Y U-234	6.87E-07	4.17E-06	1.80E-04	2.38E-05	6.69E-05	6.32E-07	9.34E-06	1.40E-04	6.32E-07	2.51E-05
W U-234	1.72E-05	5.48E-06	1.70E-04	5.80E-04	1.70E-03	1.58E-05	2.30E-04	3.50E-03	1.58E-05	2.57E-04
D U-234	1.72E-05	5.48E-06	1.70E-04	5.80E-04	1.70E-03	1.58E-05	2.30E-04	3.50E-03	1.58E-05	2.57E-04
Y U-235	7.44E-07	4.05E-06	1.90E-04	2.16E-05	6.05E-05	6.08E-07	7.38E-06	1.20E-04	5.80E-07	2.44E-05
W U-235	1.62E-05	5.37E-06	1.80E-04	5.20E-04	1.50E-03	1.38E-05	1.80E-04	2.90E-03	1.45E-05	2.24E-04
D U-235	1.62E-05	5.37E-06	1.80E-04	5.20E-04	1.50E-03	1.38E-05	1.80E-04	2.90E-03	1.45E-05	2.24E-04
Y U-236	6.47E-07	3.92E-06	1.70E-04	2.24E-05	6.32E-05	5.95E-07	8.03E-06	1.30E-04	5.95E-07	2.35E-05
W U-236	1.62E-05	5.16E-06	1.60E-04	5.40E-04	1.60E-03	1.49E-05	2.00E-04	3.10E-03	1.49E-05	2.37E-04

000501

6400

D U-236	1.62E-05	5.16E-06	1.60E-04	5.40E-04	1.60E-03	1.49E-05	2.00E-04	3.10E-03	1.49E-05	2.37E-04
Y U-238	6.14E-07	3.67E-06	1.70E-04	2.12E-05	5.96E-05	5.35E-07	7.65E-06	1.10E-04	5.63E-07	2.24E-05
W U-238	1.53E-05	4.85E-06	1.60E-04	5.10E-04	1.50E-03	1.34E-05	1.90E-04	2.80E-03	1.41E-05	2.20E-04
D U-238	1.53E-05	4.85E-06	1.60E-04	5.10E-04	1.50E-03	1.34E-05	1.90E-04	2.80E-03	1.41E-05	2.20E-04
Y NP-237	1.20E-04	5.24E-06	2.00E-04	1.00E-03	2.10E-03	1.60E-02	6.10E-03	8.70E-02	1.20E-04	4.69E-03
W NP-237	1.20E-04	5.24E-06	2.00E-04	1.00E-03	2.10E-03	1.60E-02	6.10E-03	8.70E-02	1.20E-04	4.69E-03
Y PU-236	3.84E-07	4.96E-06	2.20E-04	4.48E-06	8.13E-06	6.28E-05	2.08E-05	2.40E-04	3.84E-07	3.31E-05
W PU-236	3.84E-07	4.96E-06	2.20E-04	4.48E-06	8.13E-06	6.28E-05	2.08E-05	2.40E-04	3.84E-07	3.31E-05
Y PU-238	3.23E-06	4.71E-06	2.10E-04	2.83E-05	5.72E-05	4.40E-04	1.70E-04	2.10E-03	3.23E-06	1.37E-04
W PU-238	3.23E-06	4.71E-06	2.10E-04	2.83E-05	5.72E-05	4.40E-04	1.70E-04	2.10E-03	3.23E-06	1.37E-04
Y PU-239	3.63E-06	4.42E-06	2.00E-04	3.13E-05	6.33E-05	4.90E-04	1.90E-04	2.60E-03	3.63E-06	1.57E-04
W PU-239	3.63E-06	4.42E-06	2.00E-04	3.13E-05	6.33E-05	4.90E-04	1.90E-04	2.60E-03	3.63E-06	1.57E-04
Y PU-240	3.62E-06	4.42E-06	2.00E-04	3.13E-05	6.32E-05	4.90E-04	1.90E-04	2.60E-03	3.62E-06	1.57E-04
W PU-240	3.62E-06	4.42E-06	2.00E-04	3.13E-05	6.32E-05	4.90E-04	1.90E-04	2.60E-03	3.62E-06	1.57E-04
Y PU-241	7.51E-08	2.23E-08	9.92E-07	6.19E-07	1.23E-06	9.50E-06	3.86E-06	4.83E-05	7.49E-08	2.79E-06
W PU-241	7.51E-08	2.23E-08	9.92E-07	6.19E-07	1.23E-06	9.50E-06	3.86E-06	4.83E-05	7.49E-08	2.79E-06
Y PU-242	3.45E-06	4.21E-06	1.90E-04	2.98E-05	6.01E-05	4.70E-04	1.80E-04	2.60E-03	3.45E-06	1.53E-04
W PU-242	3.45E-06	4.21E-06	1.90E-04	2.98E-05	6.01E-05	4.70E-04	1.80E-04	2.60E-03	3.45E-06	1.53E-04
Y PU-244	3.71E-06	4.68E-06	3.00E-04	3.01E-05	6.00E-05	4.60E-04	1.70E-04	2.60E-03	3.44E-06	1.62E-04
W PU-244	3.71E-06	4.68E-06	3.00E-04	3.01E-05	6.00E-05	4.60E-04	11.70E-04	2.60E-03	3.44E-06	1.62E-04
Y AM-241	1.20E-04	4.85E-06	2.10E-04	1.00E-03	2.20E-03	1.70E-02	6.40E-03	8.00E-02	1.20E-04	4.59E-03
W AM-241	1.20E-04	4.85E-06	2.10E-04	1.00E-03	2.20E-03	1.70E-02	6.40E-03	8.00E-02	1.20E-04	4.59E-03
Y AM-243	1.30E-04	5.35E-06	2.20E-04	1.00E-03	2.20E-03	1.70E-02	6.40E-03	8.50E-02	1.30E-04	4.73E-03
W AM-243	1.30E-04	5.35E-06	2.20E-04	1.00E-03	2.20E-03	1.70E-02	6.40E-03	8.50E-02	1.30E-04	4.73E-03
Y CM-242	2.72E-06	5.25E-06	2.30E-04	2.58E-05	5.72E-05	4.40E-04	1.40E-04	1.50E-03	2.72E-06	1.18E-04
W CM-242	2.72E-06	5.25E-06	2.30E-04	2.58E-05	5.72E-05	4.40E-04	1.40E-04	1.50E-03	2.72E-06	1.18E-04
Y CM-243	8.30E-05	5.92E-06	2.50E-04	7.10E-04	1.50E-03	1.20E-02	4.20E-03	4.80E-02	8.22E-05	2.92E-03
W CM-243	8.30E-05	5.92E-06	2.50E-04	7.10E-04	1.50E-03	1.20E-02	4.20E-03	4.80E-02	8.22E-05	2.92E-03
Y CM-244	6.40E-05	4.96E-06	2.20E-04	5.60E-04	1.20E-03	9.30E-03	3.30E-03	3.80E-02	6.40E-05	2.31E-03
W CM-244	6.40E-05	4.96E-06	2.20E-04	5.60E-04	1.20E-03	9.30E-03	3.30E-03	3.80E-02	6.40E-05	2.31E-03
Y CM-248	5.80E-04	7.80E-05	1.10E-03	4.00E-03	8.10E-03	6.30E-02	6.10E-03	8.80E-02	4.80E-04	8.70E-03
W CM-248	5.80E-04	7.80E-05	1.10E-03	4.00E-03	8.10E-03	6.30E-02	6.10E-03	8.80E-02	4.80E-04	8.70E-03
Y CF-252	3.28E-05	2.10E-05	5.70E-04	2.30E-04	5.20E-04	4.00E-03	6.50E-04	6.90E-03	2.51E-05	6.66E-04
W CF-252	3.28E-05	2.10E-05	5.70E-04	2.30E-04	5.20E-04	4.00E-03	6.50E-04	6.90E-03	2.51E-05	6.66E-04
INHALATION DCF'S (MREM/PCI)										
* H-3	1.25E-07	1.25E-07	1.33E-07	1.25E-07	1.29E-07	1.24E-07	1.24E-07	9.85E-08	1.24E-07	1.26E-07
* C-14	6.18E-09	7.35E-09	7.22E-09	1.41E-08	7.92E-09	8.88E-09	2.42E-08	5.08E-08	6.48E-09	1.09E-08
D NA-22	9.43E-06	6.22E-06	7.53E-06	9.16E-06	9.91E-06	9.45E-06	1.30E-05	1.67E-05	8.14E-06	1.14E-05
D P-32	7.63E-06	5.01E-07	3.91E-06	3.56E-06	3.00E-06	3.01E-06	1.11E-05	2.02E-05	3.01E-06	5.21E-06
W P-32	9.87E-05	1.28E-06	1.04E-05	3.87E-06	2.11E-06	2.11E-06	7.76E-06	1.42E-05	2.11E-06	1.56E-05
D P-33	1.10E-06	3.08E-07	6.85E-07	7.95E-07	2.58E-07	2.58E-07	1.37E-06	3.64E-06	2.58E-07	6.33E-07
W P-33	1.56E-05	3.29E-07	1.39E-06	3.27E-06	1.87E-07	1.87E-07	9.95E-07	2.65E-06	1.87E-07	2.32E-06
D S-35	7.55E-07	2.43E-07	4.92E-07	3.37E-07	2.11E-07	2.11E-07	2.11E-07	2.11E-07	2.11E-07	3.02E-07
W S-35	1.88E-05	2.66E-07	1.03E-06	3.52E-06	1.68E-07	1.68E-07	1.68E-07	1.68E-07	1.68E-07	2.48E-06
D CL-36	4.92E-06	2.04E-06	1.86E-06	2.41E-06	1.86E-06	1.86E-06	1.86E-06	1.86E-06	1.86E-06	2.24E-06
W CL-36	1.69E-04	2.46E-06	1.86E-06	3.12E-05	1.86E-06	1.86E-06	1.86E-06	1.86E-06	1.86E-06	2.19E-05
W CA-45	3.58E-05	3.26E-07	5.11E-06	9.56E-06	1.66E-07	1.66E-06	1.08E-05	1.62E-05	1.66E-07	6.62E-06
Y SC-46	1.71E-04	1.23E-05	1.95E-05	3.90E-05	6.66E-06	1.56E-05	8.18E-06	6.22E-06	7.47E-06	2.96E-05
D CR-51	1.41E-07	9.10E-08	2.19E-07	1.12E-07	8.18E-08	8.03E-08	9.92E-08	1.01E-07	6.73E-08	1.09E-07
W CR-51	1.39E-06	8.70E-08	4.18E-07	3.37E-07	4.96E-08	8.18E-08	6.92E-08	5.55E-08	4.07E-08	2.13E-07
Y CR-51	1.98E-06	9.47E-08	4.37E-07	4.43E-07	4.74E-08	9.51E-08	6.92E-08	5.14E-08	4.00E-08	2.64E-07
D MN-54	4.18E-06	3.15E-06	3.98E-06	4.10E-06	5.35E-06	1.70E-05	5.96E-06	5.86E-06	2.30E-06	5.69E-06
W MN-54	2.47E-05	4.20E-06	4.79E-06	3.66E-06	3.40E-06	9.17E-06	4.03E-06	3.44E-06	2.73E-06	7.16E-06
W FE-55	3.20E-06	1.04E-08	3.64E-07	6.29E-07	1.09E-06	2.07E-06	1.08E-06	7.40E-07	1.07E-06	1.57E-06
Y FE-55	2.51E-05	1.28E-08	3.91E-07	6.09E-07	5.05E-07	9.58E-07	5.03E-07	3.43E-07	4.95E-07	3.96E-06
W FE-59	5.15E-05	5.28E-06	1.56E-05	5.51E-06	6.22E-06	1.00E-05	5.72E-06	5.07E-06	4.74E-06	1.34E-05
Y FE-59	8.29E-05	5.29E-06	1.50E-05	4.96E-06	4.07E-06	7.32E-06	4.18E-06	3.41E-06	3.58E-06	1.56E-05
W CO-57	1.49E-05	7.08E-07	2.45E-06	8.04E-07	6.26E-07	1.17E-06	1.03E-06	7.24E-07	5.26E-07	2.80E-06
Y CO-57	6.17E-05	2.01E-06	2.45E-06	2.25E-06	9.86E-07	2.62E-06	2.20E-06	1.67E-06	1.03E-06	9.60E-06
W CO-58	2.96E-05	3.22E-06	7.38E-06	2.65E-06	2.12E-06	3.99E-06	2.39E-06	1.78E-06	2.04E-06	6.77E-06
Y CO-58	5.92E-05	5.16E-06	7.40E-06	4.17E-06	2.81E-06	6.04E-06	3.44E-06	2.58E-06	3.24E-06	1.15E-05
W CO-60	1.30E-04	1.82E-05	2.78E-05	1.71E-05	1.87E-05	2.90E-05	1.75E-05	1.47E-05	1.44E-05	3.59E-05
Y CO-60	1.30E-03	1.00E-04	2.85E-05	8.20E-05	5.85E-05	1.20E-04	6.45E-05	5.08E-05	6.01E-05	2.41E-04

000502

TAPE1 (Continued)

D NI-59	1.33E-06	1.27E-06	1.42E-06	1.32E-06	1.28E-06	1.28E-06	1.31E-06	1.30E-06	1.39E-06	1.32E-06
W NI-59	4.44E-06	3.92E-07	8.29E-07	9.19E-07	3.85E-07	3.85E-07	3.92E-07	3.89E-07	4.22E-07	9.19E-07
D NI-63	3.23E-06	3.05E-06	3.52E-06	3.10E-06	3.05E-06	3.04E-06	3.04E-06	3.04E-06	3.04E-06	3.10E-06
W NI-63	1.14E-05	9.51E-07	2.49E-06	2.30E-06	9.18E-07	9.14E-07	9.14E-07	9.14E-07	9.14E-07	2.30E-06
D ZN-65	1.18E-05	1.14E-05	1.39E-05	1.40E-05	1.87E-05	1.86E-05	1.92E-05	1.77E-05	1.25E-05	1.88E-05
W ZN-65	2.53E-05	9.32E-06	1.03E-05	1.05E-05	1.31E-05	1.42E-05	1.36E-05	1.23E-05	9.32E-06	1.56E-05
Y ZN-65	7.65E-05	1.30E-05	8.41E-06	1.24E-05	1.29E-05	1.78E-05	1.39E-05	1.21E-05	1.09E-05	2.27E-05
D SE-75	5.03E-06	5.88E-06	4.66E-06	7.62E-06	1.98E-05	1.59E-05	5.70E-06	4.70E-06	3.15E-06	7.22E-06
W SE-75	2.01E-05	5.96E-06	4.29E-06	9.68E-06	1.67E-05	1.43E-05	5.55E-06	4.55E-06	3.10E-06	8.47E-06
D RB-86	7.68E-06	7.33E-07	1.26E-06	6.69E-06	1.11E-05	1.11E-05	1.10E-05	1.10E-05	1.10E-05	1.09E-05
D SR-85	1.72E-06	1.21E-06	2.15E-06	2.01E-06	1.36E-06	1.23E-06	3.40E-06	3.77E-06	1.34E-06	1.92E-06
Y SR-85	2.65E-05	2.44E-06	3.37E-06	6.38E-06	1.36E-06	2.85E-06	1.72E-06	1.30E-06	1.42E-06	5.03E 06
D SR-89	6.55E-06	3.95E-07	1.38EE-05	3.89E-06	2.18E-06	2.18E-06	1.33E-05	2.74E-05	2.18E-06	5.73E-06
Y SR-89	3.10E-04	1.22E-06	5.26E-05	4.76E-06	4.35E-08	4.38E-08	2.64E-07	5.44E-07	4.35E-08	4.30E-05
D SR-90	9.89E-06	1.97E-07	1.41E-05	2.40E-04	1.46E-05	1.46E-05	1.10E-03	2.20E-03	1.46E-05	2.10E-04
Y SR-90	8.50E-03	2.86E-05	8.90E-04	1.50E-04	3.65E-06	1.90E-05	1.20E-04	2.30E-04	3.65E-06	1.45E-03
W ZR-95	6.85E-05	3.98E-06	1.55E-05	4.74E-06	2.93E-06	4.68E-06	5.46E-06	7.77E-06	2.94E-06	1.34E-05
Y ZR-95	1.30E-04	5.77E-06	1.59E-05	5.55E-06	3.02E-06	6.51E-06	3.88E-06	3.17E-06	3.55E-06	2.12E-05
W NB-94	1.55E-04	1.31E-05	3.07E-05	3.61E-05	2.56E-05	1.39E-05	2.36E-05	3.37E-05	9.73E-06	3.61E-05
Y NB-94	2.77E-03	1.18E-04	3.49E-05	4.14E-04	7.10E-05	1.45E-04	8.36E-05	7.29E-05	8.21E-05	4.14E-04
Y NB-95	3.10E-05	2.39E-06	7.17E-06	1.94E-06	1.30E-06	2.53E-06	1.61E-06	1.19E-06	1.35E-06	6.06E-06
D MO-99	4.04E-06	4.50E-07	5.01E-07	7.88E-07	8.40E-06	1.41E-05	7.15E-07	1.15E-06	3.69E-07	2.30E-06
Y MO-99	1.89E-05	8.83E-07	2.05E-05	4.85E-07	4.26E-07	7.07E-07	1.79E-07	1.28E-07	1.78E-07	4.39E-06
D TC-99	9.63E-07	4.90E-07	5.09E-07	1.69E-07	3.48E-07	4.77E-07	2.44E-07	3.11E-07	1.07E-05	7.08E-07
W TC-99	5.22E-05	5.70E-07	1.66E-06	8.87E-07	3.07E-07	4.21E-07	2.15E-07	2.75E-07	9.46E-06	7.25E-06
D TC-99M	8.54E-08	3.09E-08	1.67E-08	9.81E-09	1.25E-08	1.93E-08	1.45E-08	1.08E-08	1.33E-07	2.85E-08
W TC-99M	1.82E-07	2.72E-08	1.35E-08	1.05E-08	8.36E-09	1.95E-08	1.25E-08	9.21E-09	5.72E-08	3.58E-08
Y RU-103	5.84E-05	1.85E-06	1.18E-05	1.98E-06	1.02E-06	1.92E-06	1.23E-06	9.25E-07	9.89E-07	9.40E-06
Y RU-106	3.80E-03	6.96E-06	1.40E-04	6.18E-05	8.95E-06	1.15E-05	9.37E-06	1.00E-05	9.19E-06	5.22E-04
D AG-108	2.22E-05	1.77E-05	1.05E-05	3.01E-05	3.04E-05	2.41E-04	1.14E-05	8.62E-06	4.59E-06	3.01E-05
W AG-108	1.01E-04	1.25E-05	1.63E-05	2.53E-05	1.29E-05	8.07E-05	8.33E-06	6.18E-06	5.51E-06	2.53E-05
Y AG-108	1.69E-03	1.15E-04	2.20E-05	2.83E-04	6.62E-05	1.82E-04	7.92E-05	6.22E-05	7.44E-05	2.83E-04
D AG-110	3.00E-05	2.41E-05	1.45E-05	3.96E-05	4.11E-05	3.00E-04	1.49E-05	1.13E-05	6.29E-06	3.96E-05
W AG-110	1.17E-04	1.68E-05	2.19E-05	3.09E-05	1.67E-05	9.47E-05	1.07E-05	7.88E-06	7.44E-06	3.09E-05
Y AG-110	4.44E-04	3.89E-05	2.20E-05	8.03E-05	2.29E-05	6.62E-05	2.49E-05	1.92E-05	2.36E-05	8.03E-05
D CD-109	1.24E-05	1.07E-05	1.24E-05	1.61E-04	1.46E-03	2.64E-04	1.28E-05	1.16E-05	9.84E-06	1.14E-04
W CD-109	5.40E-05	3.34E-06	1.09E-05	5.20E-05	4.22E-04	7.59E-06	3.77E-06	3.43E-06	2.83E-06	3.96E-05
Y CD-109	2.89E-04	1.54E-06	9.25E-06	6.39E-05	1.24E-04	2.32E-06	1.65E-06	1.46E-06	8.88E-07	4.51E-05
D SN-113	3.52E-06	1.82E-06	6.51E-06	4.00E-06	1.93E-06	1.79E-06	9.21E-06	1.87E-05	1.88E-06	4.00E-06
W SN-113	6.81E-05	1.57E-06	1.45E-05	1.07E-05	8.84E-07	1.46E-06	2.85E-06	4.88E-06	8.40E-07	1.07E-05
D SN-126	5.96E-05	4.51E-05	7.92E-05	8.66E-05	5.33E-05	4.74E-05	2.08E-04	4.37E-04	4.85E-05	8.66E-05
W SN-126	5.59E-04	2.22E-05	9.66E-05	9.95E-05	1.89E-05	2.27E-05	6.25E-05	1.23E-04	1.81E-05	9.95E-05
D SB-124	7.51E-06	2.95E-06	1.46E-05	5.55E-06	2.84E-06	9.32E-06	5.66E-06	1.26E-05	2.10E-06	5.55E-06
W SB-124	1.53E-04	5.77E-06	4.03E-05	2.52E-05	2.87E-06	6.51E-06	4.03E-06	4.59E-06	2.49E-06	2.52E-05
D SB-125	2.36E-06	1.14E-06	4.26E-06	2.13E-06	1.12E-06	3.92E-06	2.40E-06	1.01E-05	8.44E-07	2.13E-06
W SB-125	8.03E-05	2.33E-06	1.24E-05	1.22E-05	1.24E-06	3.17E-06	1.98E-06	3.62E-06	1.20E-06	1.22E-05
D I-125	4.40E-07	9.18E-08	6.88E-08	3.52E-05	6.33E-08	7.40E-08	1.63E-07	1.58E-07	7.99E-04	2.42E-05
D I-129	7.88E-07	4.61E-08	4.28E-08	2.05E-06	4.49E-07	4.66E-07	6.05E-07	5.64E-07	5.00E-03	1.50E-04
D I-131	2.40E-06	7.47E-08	3.41E-08	6.13E-07	1.47E-07	1.86E-07	2.02E-07	2.21E-07	1.10E-03	3.43E-05
D CS-134	3.38E-05	3.26E-05	3.71E-05	4.55E-05	6.77E-05	6.99E-05	6.16E-05	5.89E-05	5.19E-05	6.55E-05
D CS-135	6.40E-07	3.82E-08	8.51E-08	4.40E-06	7.47E-06	7.47E-06	7.47E-06	8.62E-06	7.48E-06	6.69E-06
D CS-136	6.98E-06	4.97E-06	5.55E-06	6.00E-06	8.68E-06	9.03E-06	7.91E-06	7.15E-06	6.35E-06	8.39E-06
D CS-137	1.62E-05	1.39E-05	1.60E-05	3.26E-06	5.13E-05	5.23E-05	4.91E-05	5.31E-05	4.47E-05	4.83E-05
D BA-140	9.74E-06	1.15E-06	1.78E-05	2.08E-06	1.46E-06	1.42E-06	3.61E-06	5.23E-06	1.97E-06	4.91E-06
W LA-140	2.01E-05	1.81E-06	2.11E-05	1.05E-06	1.63E-06	2.44E-06	8.52E-07	7.27E-07	2.87E-07	5.54E-06
Y CE-141	6.31E-05	5.96E-07	1.54E-05	1.15E-06	2.76E-07	8.59E-07	3.03E-07	2.99E-07	9.40E-08	9.26E-06
W CE-141	4.25E-05	5.78E-07	1.44E-05	1.36E-06	3.20E-06	1.09E-05	9.36E-07	2.32E-06	1.40E-07	7.64E-06
D CE-141	2.53E-06	5.56E-07	5.26E-06	3.27E-06	1.70E-05	5.81E-05	4.07E-06	1.19E-05	4.36E-07	6.54E-06
Y CE-144	2.90E-03	4.65E-06	1.30E-04	4.68E-05	2.37E-05	8.13E-05	8.95E-06	1.47E-05	8.22E-07	3.96E-04
W CE-144	6.80E-04	3.65E-06	1.20E-04	5.11E-05	2.30E-04	8.10E-04	8.29E-05	1.40E-04	4.46E-06	1.75E-04
D CE-144	1.73E-05	3.00E-06	4.01E-05	1.70E-04	1.00E-03	3.40E-03	1.50E-04	6.10E-04	1.88E-05	3.45E-04
W EU-152	2.13E-04	7.36E-05	5.55E-05	2.21E-04	1.37E-04	1.28E-03	2.93E-04	8.88E-04	3.05E-05	2.21E-04
W EU-154	2.93E-04	6.66E-05	6.62E-11	2.86E-04	1.25E-04	1.58E-03	3.92E-04	1.94E-03	2.64E-05	2.86E-04

TAPE1 (Continued)

W YB-169	3.45E-05	1.07E-06	1.18E-05	9.55E-06	9.32E-07	1.52E-06	3.74E-06	2.72E-05	3.05E-07	6.99E-06
Y YB-169	5.14E-05	1.29E-06	1.25E-05	1.11E-05	4.51E-07	1.21E-06	1.41E-06	2.33E-06	3.17E-07	8.07E-06
W PB-210	6.20E-03	1.20E-06	4.70E-05	3.50E-03	3.30E-03	3.10E-03	2.20E-03	2.00E-02	6.70E-04	2.60E-03
W PO-210	4.60E-02	2.22E-06	8.79E-05	1.30E-03	1.40E-02	2.50E-03	8.30E-04	3.70E-04	8.00E-04	8.76E-03
D PO-210	1.00E-03	7.22E-07	2.85E-05	2.10E-03	4.60E-02	8.00E-03	2.70E-03	1.20E-03	2.60E-03	9.95E-03
* RN-222	2.34E-06	1.55E-10	6.86E-12	3.39E-08	1.37E-08	1.35E-09	1.68E-09	1.03E-08	3.02E-10	2.83E-07
W RA-226	5.60E-02	3.81E-06	1.80E-04	4.70E-03	6.60E-04	6.60E-04	2.50E-03	2.30E-02	6.60E-04	8.51E-03
W RA-228	4.80E-03	9.58E-06	6.99E-05	2.50E-03	5.40E-04	7.50E-04	1.70E-03	1.40E-02	5.40E-04	1.80E-03
Y AC-227	1.03E+00	7.31E-05	1.80E-03	1.01E-01	9.10E-02	6.94E-01	4.50E-01	4.47E+00	6.50E-03	5.20E-01
W AC-227	8.40E-02	3.55E-05	2.20E-04	1.62E-01	2.46E-01	1.91E+00	1.22E+00	1.22E+01	1.40E-02	6.81E-01
Y TH-228	7.16E-01	9.23E-05	2.90E-03	1.90E-02	1.30E-03	2.50E-03	3.70E-02	4.01E-01	8.60E-04	1.34E-01
W TH-228	1.17E-01	2.20E-05	7.10E-04	2.20E-02	2.40E-03	1.20E-02	2.12E-01	2.31E+00	2.50E-03	1.13E-01
Y TH-229	1.23E+00	1.50E-04	1.40E-03	1.07E-01	4.70E-03	1.50E-02	6.59E-01	7.82E+00	4.20E-03	6.35E-01
W TH-229	1.16E-01	8.34E-05	3.90E-04	1.42E-01	4.40E-03	2.20E-02	1.59E+00	1.90E+01	4.30E-03	7.81E-01
Y TH-230	5.26E-01	2.67E-06	1.00E-04	3.80E-02	1.10E-03	5.50E-03	2.54E-01	3.98E+00	1.10E-03	2.59E-01
W TH-230	5.40E-02	2.74E-06	9.35E-05	5.60E-02	2.60E-03	1.30E-02	6.23E-01	9.78E+00	2.80E-03	3.78E-01
Y TH-232	4.54E-01	7.64E-06	1.10E-04	3.80E-02	1.10E-03	4.90E-03	2.71E-01	4.53E+00	1.10E-03	2.66E-01
W TH-232	4.70E-02	8.75E-06	9.23E-05	5.90E-02	2.30E-03	1.10E-02	6.53E-01	1.10E+01	2.40E-03	4.16E-01
Y PA-231	5.94E-01	2.50E-05	1.70E-04	1.38E-01	1.92E-01	1.49E+00	8.08E-01	9.36E+00	1.20E-02	6.59E-01
W PA-231	5.80E-02	3.91E-05	1.30E-04	2.61E-01	4.41E-01	3.43E+00	1.84E+00	2.16E+01	2.60E-02	1.16E+00
Y U-232	8.87E-01	5.58E-05	1.10E-03	5.30E-02	5.80E-03	4.50E-03	8.80E-02	9.54E-01	1.80E-03	3.24E-01
W U-232	6.70E-02	8.54E-06	1.30E-04	7.60E-03	9.70E-03	3.70E-04	5.70E-02	6.29E-01	1.90E-04	3.50E-02
D U-232	1.10E-03	1.86E-05	5.12E-05	2.00E-02	3.20E-02	2.90E-04	1.72E-01	1.91E+00	3.00E-04	8.02E-02
Y U-233	5.42E-01	3.86E-06	1.10E-04	1.70E-02	1.70E-03	1.55E-05	2.40E-04	3.60E-03	1.64E-05	1.12E-01
W U-233	5.60E-02	6.20E-06	9.42E-05	2.60E-03	5.00E-03	4.44E-05	7.00E-04	1.00E-02	4.69E-05	7.80E-03
D U-233	9.50E-04	1.42E-05	4.12E-05	5.70E-03	1.70E-02	1.50E-04	2.30E-03	3.50E-02	1.60E-04	2.54E-03
Y U-234	5.36E-01	3.83E-06	1.10E-04	1.60E-02	1.70E-03	1.62E-05	2.40E-04	3.50E-03	1.61E-05	1.11E-01
W U-234	5.50E-02	6.15E-06	9.41E-05	2.50E-03	4.90E-03	4.64E-05	6.80E-04	1.00E-02	4.63E-05	7.71E-03
D U-234	9.40E-04	1.40E-05	4.10E-05	5.60E-03	1.60E-02	1.50E-04	2.30E-03	3.40E-02	1.50E-04	2.50E-03
Y U-235	4.84E-01	2.48E-05	2.50E-04	1.50E-02	1.50E-03	3.16E-05	1.90E-04	2.90E-03	2.07E-05	9.97E-02
W U-235	5.00E-02	7.84E-06	1.10E-04	2.30E-03	4.40E-03	4.12E-05	5.30E-04	8.50E-03	4.28E-05	6.93E-03
D U-235	8.50E-04	1.42E-05	4.36E-05	5.10E-03	1.50E-02	1.30E-04	1.80E-03	2.80E-02	1.40E-04	2.15E-03
Y U-236	5.06E-01	3.83E-06	1.00E-04	1.60E-02	1.60E-03	1.55E-05	2.00E-04	3.20E-03	1.52E-05	1.04E-01
W U-236	5.20E-02	6.47E-06	8.92E-05	2.40E-03	4.60E-03	4.43E-05	5.90E-04	9.20E-03	4.37E-05	7.26E-03
D U-236	8.90E-04	1.55E-05	4.08E-05	5.30E-03	1.50E-02	1.50E-04	2.00E-03	3.10E-02	1.40E-04	2.30E-03
Y U-238	4.80E-01	8.96E-06	2.80E-04	1.50E-02	1.50E-03	1.76E-05	2.00E-04	2.90E-03	1.59E-05	9.86E-02
W U-238	4.90E-02	6.15E-06	1.10E-04	2.30E-03	4.40E-03	4.02E-05	5.60E-04	8.30E-03	4.16E-05	6.81E-03
D U-238	8.30E-04	1.26E-05	3.81E-05	5.00E-03	1.50E-02	1.30E-04	1.90E-03	2.80E-02	1.40E-04	2.13E-03
Y NP-237	5.69E-01	4.74E-05	1.80E-04	6.60E-02	1.02E-01	7.89E-01	3.00E-01	4.24E+00	5.80E-03	3.46E-01
W NP-237	5.90E-02	7.93E-05	1.60E-04	1.22E-01	2.51E-01	1.94E+00	7.43E-01	1.05E+01	1.40E-02	5.73E-01
Y PU-236	4.45E-01	3.45E-06	1.30E-04	1.20E-02	6.60E-03	5.00E-02	1.80E-02	2.09E-01	3.40E-04	7.95E-02
W PU-236	6.40E-02	2.90E-06	1.10E-04	1.50E-02	3.20E-02	2.47E-01	8.10E-02	9.42E-01	1.50E-03	6.59E-02
Y PU-238	6.08E-01	2.90E-06	1.20E-04	6.00E-02	9.00E-02	7.00E-01	2.61E-01	3.27E+00	5.10E-03	3.07E-01
W PU-238	6.40E-02	2.77E-06	1.10E-04	1.11E-01	2.30E-01	1.79E+00	6.71E-01	8.40E+00	1.30E-02	4.89E-01
Y PU-239	5.80E-01	2.72E-06	1.10E-04	6.70E-02	1.03E-01	7.97E-01	3.03E-01	4.16E+00	5.80E-03	3.47E-01
W PU-239	6.00E-02	2.59E-06	1.00E-04	1.24E-01	2.55E-01	1.98E+00	7.56E-01	1.04E+01	1.50E-02	5.75E-01
Y PU-240	5.79E-01	2.74E-06	1.10E-04	6.70E-02	1.03E-01	7.95E-01	3.02E-01	4.15E+00	5.80E-03	3.46E-01
W PU-240	6.00E-02	2.62E-06	1.00E-04	6.70E-02	2.55E-01	1.97E+00	7.55E-01	1.04E+01	1.50E-02	5.74E-01
Y PU-241	1.10E-03	1.03E-07	6.88E-07	1.20E-03	2.20E-03	1.70E-02	6.80E-03	8.50E-02	1.60E-04	5.38E-03
W PU-241	1.54E-05	1.81E-07	6.23E-07	2.50E-03	4.90E-03	3.80E-02	1.60E-02	1.94E-01	3.00E-04	1.09E-02
Y PU-242	5.50E-01	2.75E-06	1.10E-04	6.30E-02	9.80E-02	7.57E-01	2.87E-01	4.19E+00	5.60E-03	3.36E-01
W PU-242	5.70E-02	2.71E-06	9.74E-05	1.18E-01	2.42E-01	1.88E+00	7.18E-01	1.05E+01	1.40E-02	5.64E-01
Y PU-244	5.48E-01	1.40E-04	6.50E-04	6.30E-02	9.70E-02	7.49E-01	2.71E-01	4.24E+00	5.50E-03	3.34E-01
W PU-244	5.60E-02	1.60E-04	3.00E-04	1.17E-01	2.40E-01	1.86E+00	6.76E-01	1.06E+01	1.40E-02	5.61E-01
Y AM-241	6.15E-01	8.79E-06	1.30E-04	6.90E-02	1.06E-01	8.24E-01	3.12E-01	3.90E+00	6.00E-03	3.48E-01
W AM-241	6.40E-02	1.18E-05	1.10E-04	1.28E-01	2.63E-01	2.04E+00	7.77E-01	9.73E+00	1.50E-02	5.63E-01
Y AM-243	5.95E-01	5.96E-05	3.70E-04	6.90E-02	1.07E-01	8.23E-01	3.13E-01	4.17E+00	6.10E-03	3.53E-01
W AM-243	6.10E-02	8.48E-05	1.90E-04	1.28E-01	2.63E-01	2.03E+00	7.77E-01	1.03E+01	1.50E-02	5.79E-01
Y CM-242	1.72E-01	2.70E-06	1.20E-04	3.00E-03	7.50E-04	5.80E-03	2.00E-03	2.30E-02	4.95E-05	2.32E-02
W CM-242	5.50E-02	2.87E-06	1.10E-04	3.50E-03	6.20E-03	4.80E-02	1.50E-02	1.68E-01	3.00E-04	1.76E-02
Y CM-243	6.27E-01	2.18E-05	1.50E-04	4.80E-02	6.80E-02	5.26E-01	1.90E-01	2.15E+00	3.70E-03	2.46E-01
W CM-243	6.80E-02	3.15E-05	1.40E-04	8.70E-02	1.82E-01	1.41E+00	5.13E-01	5.78E+00	1.00E-02	3.60E-01
Y CM-244	6.07E-01	3.02E-06	1.30E-04	3.90E-02	5.20E-02	3.98E-01	1.41E-01	1.62E+00	2.70E-03	2.05E-01

000504

W CM-244	6.70E-02	2.93E-06	1.10E-04	6.80E-02	1.45E-01	1.12E+00	3.99E-01	4.56E+00	7.70E-03	2.85E-01
Y CM-248	2.22E+00	3.40E-03	1.80E-03	2.60E-01	4.01E-01	3.09E+00	2.97E-01	4.28E+00	2.40E-02	8.78E-01
W CM-248	2.32E-01	5.00E-03	3.20E-03	4.82E-01	9.86E-01	7.60E+00	7.36E-01	1.06E+01	5.80E-02	1.07E+00
Y CF-252	8.71E-01	3.20E-04	3.40E-04	2.10E-02	1.20E-02	9.40E-02	1.50E-02	1.63E-01	6.80E-04	1.38E-01
W CF-252	1.30E-01	2.60E-04	4.00E-04	2.90E-02	6.10E-02	4.73E-01	7.70E-02	8.22E-01	3.00E-03	8.84E-02
DCF4 - GROUND SURFACE (MREM/YR / pCi/M2)										
H-3	0.00E+00	0.00E+00	0.00E+00	0.00E+00	0.00E+00	0.00E+00	0.00E+00	0.00E+00	0.00E+00	0.00E+00
C-14	0.00E+00	0.00E+00	0.00E+00	0.00E+00	0.00E+00	0.00E+00	0.00E+00	0.00E+00	0.00E+00	0.00E+00
NA-22	1.85E-04	1.70E-04	1.68E-04	1.97E-04	1.82E-04	1.73E-04	1.88E-04	2.06E-04	2.30E-04	1.90E-04
P-32	0.00E+00	0.00E+00	0.00E+00	0.00E+00	0.00E+00	0.00E+00	0.00E+00	0.00E+00	0.00E+00	0.00E+00
P-33	0.00E+00	0.00E+00	0.00E+00	0.00E+00	0.00E+00	0.00E+00	0.00E+00	0.00E+00	0.00E+00	0.00E+00
S-35	0.00E+00	0.00E+00	0.00E+00	0.00E+00	0.00E+00	0.00E+00	0.00E+00	0.00E+00	0.00E+00	0.00E+00
CL-36	2.65E-13	6.85E-14	1.38E-13	3.36E-12	4.03E-16	3.26E-15	8.70E-14	4.29E-13	1.68E-13	1.62E-12
CA-45	2.08E-15	7.10E-16	1.14E-15	1.81E-14	2.86E-17	7.88E-17	6.96E-16	3.39E-15	2.02E-15	8.95E-15
SC-46	1.72E-04	1.59E-04	1.57E-04	1.83E-04	1.70E-04	1.61E-04	1.74E-04	1.86E-04	2.16E-04	1.76E-04
CR-51	2.90E-06	2.65E-06	2.60E-06	3.11E-06	2.78E-06	2.68E-06	2.99E-06	3.70E-06	3.68E-06	3.11E-06
MN-54	7.44E-05	6.89E-05	6.74E-05	7.93E-05	7.33E-05	6.96E-05	7.56E-05	8.19E-05	9.37E-05	7.93E-05
FE-55	1.26E-09	3.25E-10	6.56E-10	1.59E-09	1.91E-12	1.55E-11	4.15E-10	2.04E-09	7.96E-10	1.59E-08
FE-59	9.74E-05	9.00E-05	8.96E-05	1.04E-04	9.70E-05	9.19E-05	9.85E-05	1.05E-04	1.22E-04	1.04E-04
CO-57	1.15E-05	1.03E-05	9.93E-06	1.27E-05	1.05E-05	1.04E-05	1.00E-05	1.85E-05	1.60E-05	1.27E-05
CO-58	8.70E-05	8.04E-05	7.89E-05	9.26E-05	8.56E-05	8.15E-05	8.85E-05	9.70E-05	1.09E-04	9.26E-05
CO-60	2.02E-04	1.87E-04	1.86E-04	2.14E-04	2.01E-04	1.91E-04	2.04E-04	2.16E-04	2.52E-04	2.14E-04
NI-59	2.37E-09	6.11E-10	1.23E-09	3.00E-08	3.59E-12	2.91E-11	7.78E-10	3.85E-09	1.50E-09	3.00E-08
NI-63	0.00E+00	0.00E+00	0.00E+00	0.00E+00	0.00E+00	0.00E+00	0.00E+00	0.00E+00	0.00E+00	0.00E+00
ZN-65	4.85E-05	4.48E-05	4.44E-05	5.15E-05	4.81E-05	4.56E-05	4.89E-05	5.26E-05	6.11E-05	5.15E-05
SE-75	3.59E-05	3.26E-05	3.20E-05	3.89E-05	3.40E-05	3.30E-05	3.55E-05	5.00E-05	4.70E-05	3.74E-05
RB-86	7.96E-06	7.36E-06	7.29E-06	8.47E-06	7.92E-06	7.51E-06	8.07E-06	8.62E-06	1.00E-05	8.18E-06
SR-85	4.59E-05	4.22E-05	4.11E-05	4.96E-05	4.48E-05	4.29E-05	4.70E-05	5.37E-05	5.70E-05	4.74E-05
SR-89	1.20E-08	1.11E-08	1.10E-08	1.28E-08	1.19E-08	1.13E-08	1.22E-08	1.31E-08	1.51E-08	1.28E-08
SR-90	0.00E+00	0.00E+00	0.00E+00	0.00E+00	0.00E+00	0.00E+00	0.00E+00	0.00E+00	0.00E+00	0.00E+00
ZR-95	7.15E-05	6.61E-05	6.46E-05	7.66E-05	7.01E-05	6.66E-05	7.26E-05	8.09E-05	9.02E-05	7.66E-05
NB-94	1.40E-04	1.30E-04	1.27E-04	1.50E-04	1.38E-04	1.31E-04	1.43E-04	1.56E-04	1.77E-04	1.50E-04
NB-95	6.85E-05	6.33E-05	6.22E-05	7.30E-05	6.74E-05	6.41E-05	6.96E-05	7.59E-05	8.63E-05	7.30E-05
MO-99	1.39E-05	1.29E-05	1.26E-05	1.49E-05	1.36E-05	1.30E-05	1.40E-05	1.62E-05	1.77E-05	1.49E-05
TC-99	4.93E-11	4.30E-11	4.04E-11	5.52E-11	4.56E-11	4.44E-11	3.62E-11	8.63E-11	7.26E-11	5.52E-11
TC-99M	1.20E-05	1.07E-05	1.05E-05	1.31E-05	1.10E-05	1.09E-05	1.09E-05	1.87E-05	1.65E-05	1.31E-05
RU-103	4.37E-05	4.00E-05	3.93E-05	4.68E-05	4.23E-05	4.08E-05	4.45E-05	5.12E-05	5.41E-05	4.68E-05
RU-106	1.84E-05	1.70E-05	1.66E-05	1.97E-05	1.80E-05	1.72E-05	1.88E-05	2.11E-05	2.30E-05	1.97E-05
AG-108	1.46E-04	1.35E-04	1.32E-04	1.57E-04	1.43E-04	1.37E-04	1.49E-04	1.68E-04	1.84E-04	1.57E-04
AG-110	2.40E-04	2.22E-04	2.18E-04	2.55E-04	2.37E-04	2.25E-04	2.43E-04	2.64E-04	3.00E-04	2.55E-04
CD-109	3.02E-07	1.88E-07	1.83E-07	9.25E-07	4.03E-07	1.36E-07	1.04E-07	5.07E-07	6.11E-07	5.62E-07
SN-113	2.41E-05	2.20E-05	2.16E-05	2.66E-05	2.36E-05	2.22E-05	2.46E-05	2.98E-05	3.07E-05	2.66E-05
SN-126	3.93E-04	3.63E-04	3.55E-04	4.20E-04	3.85E-04	3.67E-04	3.99E-04	4.50E-04	4.94E-04	4.20E-04
SB-124	1.56E-04	1.44E-04	1.43E-04	1.66E-04	1.55E-04	1.47E-04	1.59E-04	1.71E-04	1.93E-04	1.66E-04
SB-125	3.91E-05	3.58E-05	3.49E-05	4.34E-05	3.90E-05	3.62E-05	3.92E-05	4.68E-05	5.01E-05	4.34E-05
I-125	1.09E-06	7.73E-07	6.77E-07	2.30E-06	1.87E-06	7.92E-07	4.00E-07	1.89E-06	2.26E-06	1.61E-06
I-129	1.07E-06	7.81E-07	6.70E-07	2.03E-06	1.77E-06	8.44E-07	4.04E-07	1.87E-06	2.17E-06	2.03E-06
I-131	3.57E-05	3.26E-05	3.19E-05	3.91E-05	3.50E-05	3.31E-05	3.62E-05	4.46E-05	4.55E-05	3.91E-05
CS-134	1.39E-04	1.28E-04	1.26E-04	1.48E-04	1.36E-04	1.30E-04	1.41E-04	1.56E-04	1.74E-04	1.48E-04
CS-135	0.00E+00	0.00E+00	0.00E+00	0.00E+00	0.00E+00	0.00E+00	0.00E+00	0.00E+00	0.00E+00	0.00E+00
CS-136	1.89E-04	1.74E-04	1.71E-04	2.01E-04	1.86E-04	1.77E-04	1.90E-04	2.12E-04	2.39E-04	2.01E-04
CS-137	5.37E-05	4.96E-05	4.85E-05	5.74E-05	5.26E-05	5.00E-05	5.44E-05	6.07E-05	6.74E-05	5.74E-05
BA-140	1.70E-05	1.56E-05	1.52E-05	1.84E-05	1.66E-05	1.58E-05	1.72E-05	2.05E-05	2.15E-05	1.84E-05
LA-140	1.89E-04	1.75E-04	1.74E-04	2.01E-04	1.89E-04	1.79E-04	1.92E-04	2.05E-04	2.33E-04	2.01E-04
CE-141	7.04E-06	6.30E-06	6.11E-06	7.81E-06	6.70E-06	6.37E-06	6.33E-06	1.10E-05	9.81E-06	7.81E-06
CE-144	4.89E-06	4.37E-06	4.22E-06	5.63E-06	5.18E-06	4.52E-06	4.31E-06	6.58E-06	6.74E-06	5.63E-06
EU-152	9.74E-05	8.93E-05	8.81E-05	1.04E-04	9.67E-05	9.11E-05	9.70E-05	1.11E-04	1.24E-04	1.04E-04
EU-154	1.06E-04	9.81E-05	9.67E-05	1.14E-04	1.05E-04	9.96E-05	1.07E-04	1.19E-04	1.34E-04	1.14E-04
YB-169	2.78E-05	2.42E-05	2.28E-05	3.19E-05	2.73E-05	2.53E-05	2.20E-05	4.48E-05	4.03E-05	2.92E-05
PB-210	1.44E-07	1.11E-07	9.67E-08	2.56E-07	1.63E-07	1.23E-07	6.44E-08	2.64E-07	2.42E-07	2.56E-07
PO-210	7.59E-10	7.04E-10	6.89E-10	8.11E-10	7.48E-10	7.11E-10	7.70E-10	8.41E-10	9.56E-10	8.11E-10
RN-222	3.81E-04	3.52E-04	3.48E-04	4.05E-04	3.78E-04	3.59E-04	3.86E-04	4.21E-04	4.71E-04	4.05E-04
RA-226	3.81E-04	3.52E-04	3.49E-04	4.05E-04	3.78E-04	3.59E-04	3.86E-04	4.22E-04	4.72E-04	4.05E-04

000505

6400

RA-228	8.00E-05	7.41E-05	7.30E-05	8.56E-05	7.89E-05	7.48E-05	8.07E-05	8.96E-05	1.01E-04	8.56E-05
AC-227	4.09E-05	3.69E-05	3.59E-05	4.51E-05	3.93E-05	3.76E-05	3.89E-05	5.68E-05	5.43E-05	4.51E-05
TH-228	3.00E-04	2.81E-04	2.78E-04	3.18E-04	3.04E-04	2.85E-04	3.05E-04	3.26E-04	3.61E-04	3.18E-04
TH-229	1.99E-04	1.82E-04	1.80E-04	2.13E-04	1.96E-04	1.86E-04	1.97E-04	2.30E-04	2.49E-04	2.13E-04
TH-230	3.85E-08	3.09E-08	2.97E-08	7.85E-08	3.26E-08	3.12E-08	2.59E-08	6.59E-08	5.48E-08	7.85E-08
TH-232	1.96E-08	1.43E-08	1.41E-08	5.74E-08	1.48E-08	1.38E-08	1.13E-08	3.41E-08	2.74E-08	5.74E-08
PA-231	2.77E-06	2.49E-06	2.44E-06	3.25E-06	2.66E-06	2.51E-06	2.73E-06	3.74E-06	3.62E-06	3.25E-06
U-232	2.86E-08	2.04E-08	2.08E-08	9.07E-08	1.97E-08	1.87E-08	1.73E-08	4.81E-08	3.89E-08	9.07E-08
U-233	2.27E-08	1.87E-08	1.86E-08	4.41E-08	1.83E-08	1.81E-08	1.77E-08	3.74E-08	3.11E-08	4.41E-08
U-234	1.74E-08	1.11E-08	1.19E-08	7.07E-08	1.00E-08	9.33E-09	9.15E-09	2.95E-08	2.31E-08	7.07E-08
U-235	1.50E-05	1.35E-05	1.32E-05	1.70E-05	1.41E-05	1.37E-05	1.41E-05	2.26E-05	2.04E-05	1.70E-05
U-236	1.40E-08	8.41E-09	9.19E-09	6.41E-08	6.85E-09	6.67E-09	6.52E-09	2.41E-08	1.81E-08	6.41E-08
U-238	1.73E-04	1.60E-04	1.57E-04	1.85E-04	1.70E-04	1.62E-04	1.73E-04	1.98E-04	2.19E-04	1.85E-04
NP-237	2.18E-05	1.96E-05	1.91E-05	2.43E-05	2.07E-05	1.99E-05	2.09E-05	3.04E-05	2.88E-05	2.43E-05
PU-236	1.59E-08	8.15E-09	9.70E-09	8.85E-08	4.96E-09	4.85E-09	6.33E-09	2.69E-08	2.01E-08	8.85E-08
PU-238	1.23E-08	5.67E-09	7.22E-09	7.67E-08	2.67E-09	2.64E-09	4.52E-09	2.05E-08	1.51E-08	7.67E-08
PU-239	8.96E-09	6.04E-09	6.56E-09	3.38E-08	4.85E-09	4.85E-09	5.59E-09	1.47E-08	1.17E-08	3.38E-08
PU-240	1.20E-08	5.63E-09	7.07E-09	7.33E-08	2.87E-09	2.77E-09	4.44E-09	2.01E-08	1.49E-08	7.33E-08
PU-241	0.00E+00	0.00E+00	0.00E+00	0.00E+00	0.00E+00	0.00E+00	0.00E+00	0.00E+00	0.00E+00	0.00E+00
PU-242	1.01E-08	4.81E-09	6.00E-09	6.07E-08	2.50E-09	2.44E-09	3.78E-09	1.69E-08	1.26E-08	6.07E-08
PU-244	2.91E-05	2.68E-05	2.63E-05	3.16E-05	2.85E-05	2.72E-05	2.96E-05	3.32E-05	3.64E-05	3.16E-05
AM-241	2.01E-06	1.64E-06	1.46E-06	2.66E-06	1.98E-06	1.78E-06	1.08E-06	3.70E-06	3.18E-06	2.66E-06
AM-243	2.03E-05	1.79E-05	1.72E-05	2.30E-05	1.90E-05	1.84E-05	1.72E-05	3.20E-05	2.84E-05	2.30E-05
CM-242	1.44E-08	6.70E-09	8.48E-09	8.52E-08	2.78E-09	2.82E-09	5.26E-09	2.39E-08	1.86E-08	8.52E-08
CM-243	1.17E-05	1.05E-05	1.02E-05	1.31E-05	1.09E-05	1.06E-05	1.09E-05	1.74E-05	1.58E-05	1.31E-05
CM-244	1.24E-08	5.63E-09	7.26E-09	7.56E-08	2.07E-09	2.12E-09	4.44E-09	2.06E-08	1.59E-08	7.56E-08
CM-248	9.04E-09	4.19E-09	5.30E-09	5.37E-08	1.76E-09	1.75E-09	3.27E-09	1.50E-08	1.17E-08	5.37E-08
CF-252	1.09E-08	5.41E-09	6.56E-09	5.89E-08	2.46E-09	2.42E-09	4.11E-09	1.81E-08	1.50E-08	5.89E-08
DCF5 - AIR IMMERSION, (MREM/YR / pCi/M3)										
H-3	0.00E+00	0.00E+00	0.00E+00	0.00E+00	0.00E+00	0.00E+00	0.00E+00	0.00E+00	0.00E+00	0.00E+00
C-14	0.00E+00	0.00E+00	0.00E+00	0.00E+00	0.00E+00	0.00E+00	0.00E+00	0.00E+00	0.00E+00	0.00E+00
NA-22	9.84E-03	9.10E-03	8.99E-03	1.05E-02	9.73E-03	9.25E-03	9.99E-03	1.10E-02	1.23E-02	1.01E-02
P-32	0.00E+00	0.00E+00	0.00E+00	0.00E+00	0.00E+00	0.00E+00	0.00E+00	0.00E+00	0.00E+00	0.00E+00
P-33	0.00E+00	0.00E+00	0.00E+00	0.00E+00	0.00E+00	0.00E+00	0.00E+00	0.00E+00	0.00E+00	0.00E+00
S-35	0.00E+00	0.00E+00	0.00E+00	0.00E+00	0.00E+00	0.00E+00	0.00E+00	0.00E+00	0.00E+00	0.00E+00
CL-36	2.41E-12	6.22E-13	1.25E-12	3.05E-11	3.66E-15	2.96E-14	7.92E-13	3.92E-12	1.52E-12	1.47E-11
CA-45	7.92E-15	2.71E-15	4.37E-15	6.88E-14	1.09E-16	3.00E-16	2.65E-15	1.29E-14	7.70E-15	3.40E-14
SC-46	9.29E-03	8.62E-03	8.51E-03	9.88E-03	9.21E-03	8.73E-03	9.40E-03	1.01E-02	1.17E-02	9.55E-03
CR-51	1.35E-04	1.23E-04	1.21E-04	1.45E-04	1.29E-04	1.25E-04	1.39E-04	1.72E-04	1.71E-04	1.45E-04
MN-54	3.85E-03	3.57E-03	3.51E-03	4.11E-03	3.81E-03	3.61E-03	3.93E-03	4.26E-03	4.85E-03	4.11E-03
FE-55	6.52E-09	1.69E-09	3.39E-09	8.26E-08	9.89E-12	8.04E-11	2.14E-09	1.06E-08	4.15E-09	8.26E-08
FE-59	5.48E-03	5.07E-03	5.04E-03	5.81E-03	5.44E-03	5.19E-03	5.52E-03	5.89E-03	6.85E-03	5.81E-03
CO-57	5.11E-04	4.59E-04	4.44E-04	5.63E-04	4.70E-04	4.63E-04	4.48E-04	8.30E-04	7.19E-04	5.63E-04
CO-58	4.44E-03	4.11E-03	4.04E-03	4.74E-03	4.37E-03	4.19E-03	4.52E-03	4.96E-03	5.59E-03	4.74E-03
CO-60	1.15E-02	1.07E-02	1.06E-02	1.23E-02	1.15E-02	1.09E-02	1.16E-02	1.23E-02	1.44E-02	1.23E-02
NI-59	1.10E-08	2.83E-09	5.70E-09	1.39E-07	1.66E-11	1.35E-10	3.60E-09	1.78E-08	6.93E-09	1.39E-07
NI-63	0.00E+00	0.00E+00	0.00E+00	0.00E+00	0.00E+00	0.00E+00	0.00E+00	0.00E+00	0.00E+00	0.00E+00
ZN-65	2.68E-03	2.48E-03	2.46E-03	2.85E-03	2.66E-03	2.53E-03	2.71E-03	2.90E-03	3.37E-03	2.85E-03
SE-75	1.63E-03	1.50E-03	1.47E-03	1.78E-03	1.57E-03	1.52E-03	1.63E-03	2.29E-03	2.16E-03	1.71E-03
RB-86	4.37E-04	4.07E-04	4.00E-04	4.66E-04	4.37E-04	4.11E-04	4.44E-04	4.74E-04	5.51E-04	4.51E-04
SR-85	2.23E-03	2.05E-03	2.00E-03	2.39E-03	2.17E-03	2.08E-03	2.28E-03	2.60E-03	2.77E-03	2.30E-03
SR-89	6.33E-07	5.89E-07	5.78E-07	6.74E-07	6.26E-07	5.96E-07	6.44E-07	6.96E-07	8.00E-07	6.74E-07
SR-90	0.00E+00	0.00E+00	0.00E+00	0.00E+00	0.00E+00	0.00E+00	0.00E+00	0.00E+00	0.00E+00	0.00E+00
ZR-95	3.61E-03	3.34E-03	3.27E-03	3.86E-03	3.54E-03	3.37E-03	3.67E-03	4.09E-03	4.55E-03	3.86E-03
NB-94	7.22E-03	6.70E-03	6.56E-03	7.70E-03	7.11E-03	6.78E-03	7.33E-03	8.04E-03	9.11E-03	7.70E-03
NB-95	3.50E-03	3.24E-03	3.18E-03	3.74E-03	3.45E-03	3.28E-03	3.56E-03	3.89E-03	4.41E-03	3.74E-03
MO-99	7.00E-04	6.44E-04	6.33E-04	7.48E-04	6.85E-04	6.52E-04	7.07E-04	8.07E-04	8.85E-04	7.48E-04
TC-99	2.09E-09	1.82E-09	1.71E-09	2.34E-09	1.93E-09	1.89E-09	1.53E-09	3.65E-09	3.07E-09	2.34E-09
TC-99M	5.37E-04	4.85E-04	4.70E-04	5.85E-04	4.96E-04	4.89E-04	4.93E-04	8.44E-04	7.41E-04	5.85E-04
RU-103	2.11E-03	1.94E-03	1.90E-03	2.26E-03	2.05E-03	1.97E-03	2.16E-03	2.47E-03	2.62E-03	2.26E-03
RU-106	9.22E-04	8.52E-04	8.33E-04	9.85E-04	9.04E-04	8.63E-04	9.41E-04	1.06E-03	1.15E-03	9.85E-04
AG-108	7.26E-03	6.70E-03	6.55E-03	7.75E-03	7.08E-03	6.78E-03	7.41E-03	8.24E-03	9.10E-03	7.75E-03
AG-110	1.27E-02	1.18E-02	1.16E-02	1.35E-02	1.25E-02	1.19E-02	1.29E-02	1.40E-02	1.59E-02	1.35E-02

000506

TAPE1 (Continued)

CD-109	3.57E-06	2.24E-06	2.16E-06	1.07E-05	4.88E-06	1.65E-06	1.23E-06	5.99E-06	7.25E-06	6.55E-06	
SN-113	1.12E-03	1.03E-03	1.01E-03	1.22E-03	1.09E-03	1.04E-03	1.15E-03	1.38E-03	1.42E-03	1.22E-03	
SN-126	1.96E-02	1.82E-02	1.77E-02	2.10E-02	1.93E-02	1.84E-02	2.00E-02	2.25E-02	2.47E-02	2.10E-02	
SB-124	8.81E-03	8.15E-03	8.07E-03	9.37E-03	8.78E-03	8.33E-03	8.96E-03	9.59E-03	1.09E-02	9.37E-03	
SB-125	1.87E-03	1.72E-03	1.68E-03	2.03E-03	1.84E-03	1.74E-03	1.89E-03	2.22E-03	2.37E-03	2.03E-03	
I-125	2.45E-05	1.73E-05	1.51E-05	5.18E-05	4.18E-05	1.76E-05	8.92E-06	4.26E-05	5.07E-05	3.61E-05	
I-129	2.06E-05	1.51E-05	1.30E-05	3.81E-05	3.39E-05	1.65E-05	7.81E-06	3.63E-05	4.15E-05	3.81E-05	
I-131	1.67E-03	1.53E-03	1.50E-03	1.80E-03	1.62E-03	1.55E-03	1.71E-03	2.06E-03	2.12E-03	1.80E-03	
CS-134	7.04E-03	6.52E-03	6.37E-03	7.52E-03	6.93E-03	6.59E-03	7.19E-03	7.93E-03	8.85E-03	7.52E-03	
CS-135	0.00E+00	0.00E+00	0.00E+00	0.00E+00	0.00E+00	0.00E+00	0.00E+00	0.00E+00	0.00E+00	0.00E+00	
CS-136	9.93E-03	9.19E-03	9.04E-03	1.06E-02	9.78E-03	9.30E-03	1.00E-02	1.11E-02	1.25E-02	1.06E-02	
CS-137	2.69E-03	2.48E-03	2.43E-03	2.87E-03	2.63E-03	2.51E-03	2.74E-03	3.04E-03	3.37E-03	2.87E-03	
BA-140	8.15E-04	7.48E-04	7.30E-04	8.74E-04	7.93E-04	7.56E-04	8.26E-04	9.74E-04	1.02E-03	8.74E-04	
LA-140	1.09E-02	1.01E-02	1.00E-02	1.16E-02	1.09E-02	1.03E-02	1.11E-02	1.18E-02	1.34E-02	1.16E-02	
CE-141	3.11E-04	2.79E-04	2.72E-04	3.43E-04	2.93E-04	2.83E-04	2.83E-04	4.85E-04	4.30E-04	3.43E-04	
CE-144	2.46E-04	2.23E-04	2.18E-04	2.73E-04	2.52E-04	2.29E-04	2.29E-04	3.13E-04	3.24E-04	2.73E-04	
EU-152	5.19E-03	4.78E-03	4.70E-03	5.52E-03	5.15E-03	4.85E-03	5.19E-03	5.81E-03	6.56E-03	5.52E-03	
EU-154	5.74E-03	5.30E-03	5.22E-03	6.11E-03	5.67E-03	5.37E-03	5.74E-03	6.37E-03	7.22E-03	6.11E-03	
YB-169	1.13E-03	9.92E-04	9.44E-04	1.28E-03	1.10E-03	1.03E-03	9.36E-04	1.78E-03	1.61E-03	1.18E-03	
PB-210	4.22E-06	3.35E-06	2.87E-06	5.93E-06	5.04E-06	3.78E-06	1.93E-06	7.81E-06	7.30E-06	5.93E-06	
PO-210	3.93E-08	3.63E-08	3.56E-08	4.19E-08	3.85E-08	3.67E-08	3.96E-08	4.33E-08	4.93E-08	4.19E-08	
RN-222	2.15E-02	1.99E-02	1.97E-02	2.28E-02	2.14E-02	2.02E-02	2.17E-02	2.36E-02	2.65E-02	2.28E-02	
RA-226	2.15E-02	1.99E-02	1.97E-02	2.28E-02	2.14E-02	2.03E-02	2.18E-02	2.36E-02	2.65E-02	2.28E-02	
RA-228	4.26E-03	3.93E-03	3.89E-03	4.52E-03	4.19E-03	4.00E-03	4.30E-03	4.74E-03	5.37E-03	4.52E-03	
AC-227	1.86E-03	1.68E-03	1.64E-03	2.02E-03	1.78E-03	1.71E-03	1.79E-03	2.54E-03	2.45E-03	2.02E-03	
TH-228	1.91E-02	1.79E-02	1.78E-02	2.02E-02	1.94E-02	1.82E-02	1.95E-02	2.05E-02	2.29E-02	2.02E-02	
TH-229	1.09E-02	1.00E-02	9.97E-03	1.17E-02	1.08E-02	1.03E-02	1.09E-02	1.25E-02	1.36E-02	1.17E-02	
TH-230	1.41E-06	1.21E-06	1.13E-06	1.73E-06	1.33E-06	1.27E-06	1.02E-06	2.41E-06	2.07E-06	1.73E-06	
TH-232	5.96E-07	5.00E-07	4.63E-07	8.22E-07	5.63E-07	5.26E-07	3.93E-07	1.04E-06	8.93E-07	8.22E-07	
PA-231	1.25E-04	1.13E-04	1.11E-04	1.37E-04	1.20E-04	1.15E-04	1.25E-04	1.68E-04	1.63E-04	1.37E-04	
U-232	8.37E-07	7.07E-07	6.70E-07	1.19E-06	7.74E-07	7.30E-07	6.07E-07	1.41E-06	1.22E-06	1.19E-06	
U-233	8.89E-07	7.85E-07	7.59E-07	1.06E-06	8.07E-07	7.93E-07	7.44E-07	1.47E-06	1.26E-06	1.06E-06	
U-234	4.11E-07	3.37E-07	3.19E-07	6.78E-07	3.74E-07	3.46E-07	2.76E-07	7.11E-07	6.07E-07	6.78E-07	
U-235	6.76E-04	6.07E-04	5.94E-04	7.37E-04	6.33E-04	6.16E-04	6.38E-04	1.01E-03	9.16E-04	7.37E-04	
U-236	2.99E-07	2.39E-07	2.21E-07	5.33E-07	2.61E-07	2.48E-07	1.72E-07	5.41E-07	4.48E-07	5.33E-07	
U-238	9.05E-03	8.33E-03	8.18E-03	9.65E-03	8.90E-03	8.45E-03	9.07E-03	1.03E-02	1.14E-02	9.65E-03	
NP-237	9.84E-04	8.91E-04	8.69E-04	1.07E-03	9.39E-04	9.05E-04	9.52E-04	1.36E-03	1.30E-03	1.07E-03	
PU-236	2.10E-07	1.53E-07	1.46E-07	5.33E-07	1.64E-07	1.51E-07	1.06E-07	3.78E-07	3.10E-07	5.33E-07	
PU-238	1.18E-07	7.85E-08	7.78E-08	3.96E-07	8.04E-08	7.15E-08	5.30E-08	2.09E-07	1.71E-07	3.96E-07	
PU-239	2.42E-07	2.07E-07	2.03E-07	3.65E-07	2.09E-07	2.05E-07	1.95E-07	4.00E-07	3.39E-07	3.65E-07	
PU-240	1.21E-07	8.15E-08	8.00E-08	3.89E-07	8.63E-08	7.59E-08	5.44E-08	2.15E-07	1.78E-07	3.89E-07	
PU-241	0.00E+00	0.00E+00	0.00E+00	0.00E+00	0.00E+00	0.00E+00	0.00E+00	0.00E+00	0.00E+00	0.00E+00	
PU-242	1.07E-07	7.41E-08	7.22E-08	3.30E-07	7.78E-08	7.00E-08	5.00E-08	1.92E-07	1.58E-07	3.30E-07	
PU-244	1.48E-03	1.37E-03	1.34E-03	1.58E-03	1.45E-03	1.39E-03	1.51E-03	1.68E-03	1.85E-03	1.58E-03	
AM-241	6.93E-05	5.70E-05	5.04E-05	8.41E-05	6.93E-05	6.22E-05	3.74E-05	1.27E-04	1.10E-04	8.41E-05	
AM-243	8.86E-04	7.86E-04	7.53E-04	9.77E-04	8.31E-04	8.04E-04	7.63E-04	1.38E-03	1.23E-03	9.77E-04	
CM-242	1.26E-07	8.19E-08	8.33E-08	4.48E-07	7.59E-08	7.00E-08	5.74E-08	2.22E-07	1.82E-07	4.48E-07	
CM-243	5.22E-04	4.70E-04	4.59E-04	5.70E-04	4.93E-04	4.78E-04	4.89E-04	7.74E-04	7.07E-04	5.70E-04	
CM-244	9.70E-08	5.96E-08	6.26E-08	3.81E-07	5.26E-08	4.78E-08	4.19E-08	1.69E-07	1.39E-07	3.81E-07	
CM-248	7.81E-08	5.00E-08	5.07E-08	2.81E-07	4.70E-08	4.26E-08	3.43E-08	1.37E-07	1.13E-07	2.81E-07	
CF-252	1.10E-07	7.41E-08	7.48E-08	3.47E-07	6.70E-08	6.37E-08	5.41E-08	1.91E-07	1.60E-07	3.47E-07	

DCF3 - GROUND VOLUME (MREM/YR / pCI/M3) , TRANSFER FACTORS (5) , DECAY CONST (1/YR), FMF, RET1, RET4, ET, EAVG

H-3	0.00E+00	4.80E+00	1.20E-02	1.40E-02	9.00E-01	9.00E-01	5.64E-02	1.15E+00	1.00E+00	1.00E+00	0.00E+00	0.00E+00
C-14	0.00E+00	5.50E+00	3.10E-02	1.50E-02	4.60E+03	9.10E+03	1.21E-04	5.76E-03	1.00E+01	1.00E+01	0.00E+00	0.00E+00
NA-22	1.34E-05	4.60E-03	8.30E-02	3.50E-02	1.00E+02	2.00E+02	2.65E-01	1.62E-04	8.50E+01	7.20E+02	2.19E+00	7.84E-01
P-32	0.00E+00	1.10E+00	5.70E-02	1.60E-02	1.00E+05	2.00E+04	1.77E+01	1.26E-03	4.30E+01	3.60E+02	0.00E+00	0.00E+00
P-33	0.00E+00	1.10E+00	5.70E-02	1.60E-02	1.00E+05	2.00E+04	1.04E+01	1.26E-03	4.30E+01	3.60E+02	0.00E+00	0.00E+00
S-35	0.00E+00	5.90E-01	1.00E-01	1.60E-02	7.50E+02	1.00E+02	2.88E+00	1.20E-02	9.00E+00	4.20E+01	0.00E+00	0.00E+00
CL-36	0.00E+00	5.00E+00	8.00E-02	1.70E-02	5.00E+01	1.00E+02	2.25E-06	1.15E-01	2.00E+00	5.00E+00	0.00E+00	0.00E+00
CA-45	6.42E-15	3.60E-02	7.20E-04	1.10E-02	4.00E+01	3.30E+02	1.53E+00	9.86E-03	9.00E+00	7.30E+01	3.60E-10	1.20E-02
SC-46	1.24E-05	1.10E-03	1.60E-02	5.00E-06	2.00E+00	1.00E+03	3.01E+00	1.11E-04	9.00E+00	7.30E+01	2.01E+00	1.01E+00
CR-51	1.85E-07	1.30E-02	9.20E-03	1.60E-03	2.00E+02	2.00E+03	9.10E+00	1.26E-03	4.30E+01	3.60E+02	3.26E-02	3.20E-01
MN-54	5.10E-06	1.20E-01	3.90E-04	3.30E-04	4.00E+02	9.00E+04	8.35E-01	1.26E-03	4.30E+01	3.60E+02	8.35E-01	8.35E-01

000507

6400

TAPE1 (Continued)

FE-55	0.00E+00	4.20E-04	1.90E-02	2.70E-04	1.00E+02	3.20E+03	2.67E-01	1.48E-02	6.30E+02	5.40E+03	0.00E+00	0.00E+00
FE-59	7.34E-06	4.20E-04	1.90E-02	2.70E-04	1.00E+02	3.20E+03	5.55E+00	1.48E-02	6.30E+02	5.40E+03	1.19E+00	1.14E+00
CO-57	5.61E-07	1.50E-02	9.70E-03	1.80E-03	5.00E+01	2.00E+02	9.37E-01	1.48E-02	4.20E+02	3.60E+03	1.21E-01	1.14E-01
CO-58	5.01E-06	1.50E-02	9.70E-03	1.80E-03	5.00E+01	2.00E+02	3.55E+00	1.48E-02	4.20E+02	3.60E+03	8.21E-01	8.16E-01
CO-60	1.55E-05	1.50E-02	9.70E-03	1.80E-03	5.00E+01	2.00E+02	1.32E-01	1.48E-02	4.20E+02	3.60E+03	2.51E+00	1.25E+00
NI-59	0.00E+00	2.10E-02	2.00E-03	1.00E-03	1.00E+02	1.00E+02	8.66E-06	1.48E-02	4.20E+02	3.60E+03	0.00E+00	0.00E+00
NI-63	0.00E+00	2.10E-02	2.00E-03	1.00E-03	1.00E+02	1.00E+02	7.53E-03	1.48E-02	4.20E+02	3.60E+03	0.00E+00	0.00E+00
ZN-65	3.50E-06	1.10E-01	1.20E-01	1.00E-02	2.00E+03	1.00E+04	1.03E+00	1.48E-02	9.00E+00	7.30E+01	5.66E-01	1.12E+00
SE-75	1.99E-06	1.30E+00	1.50E-02	4.00E-03	1.70E+02	1.70E+02	2.10E+00	1.20E-02	9.00E+00	4.20E+01	3.74E-01	2.17E-01
RB-86	5.84E-07	1.30E-01	1.10E-02	1.20E-02	2.00E+03	1.00E+03	1.36E+01	1.62E-04	8.50E+01	7.20E+02	9.47E-02	1.08E+00
SR-85	3.10E-06	7.50E-02	5.90E-04	1.40E-03	3.00E+01	1.00E+02	3.96E+00	9.86E-03	9.00E+00	7.30E+01	5.22E-01	5.19E-01
SR-89	5.32E-11	7.50E-02	5.90E-04	1.40E-03	3.00E+01	1.00E+02	4.81E+00	9.86E-03	9.00E+00	7.30E+01	8.67E-06	9.13E-01
SR-90	1.92E-13	7.50E-02	5.90E-04	1.40E-03	3.00E+01	1.00E+02	2.47E-02	9.86E-03	9.00E+00	7.30E+01	3.06E-08	2.19E+00
ZR-95	9.23E-06	7.70E-04	2.10E-02	3.00E-05	3.30E+00	6.70E+00	3.87E+00	9.86E-03	1.00E+03	1.00E+04	1.52E+00	7.52E-01
NB-94	9.50E-06	9.40E-03	2.50E-01	2.00E-02	3.00E+04	1.00E+02	3.47E-05	1.11E-02	1.00E+03	1.00E+04	1.56E+00	7.88E-01
NB-95	4.70E-06	9.40E-03	2.50E-01	2.00E-02	3.00E+04	1.00E+02	7.23E+00	1.11E-02	1.00E+03	1.00E+04	7.73E-01	7.63E-01
MO-99	8.62E-07	1.20E-01	6.80E-03	1.40E-03	1.00E+01	1.00E+01	9.11E+01	1.15E-01	2.00E+00	5.00E+00	1.42E-01	4.31E-01
TC-99	1.39E-14	1.10E+00	8.70E-03	9.90E-03	1.50E+01	5.00E+00	3.27E-06	1.15E-01	2.00E+00	5.00E+00	5.83E-09	8.97E-02
TC-99M	5.89E-07	1.10E+00	8.70E-03	9.90E-03	1.50E+01	5.00E+00	1.00E+03	1.15E-01	2.00E+00	5.00E+00	1.25E-01	1.40E-01
RU-103	2.77E-06	1.40E-03	4.00E-01	6.10E-07	1.00E+01	3.00E+02	6.42E+00	1.15E-01	2.00E+00	5.00E+00	4.68E-01	5.04E-01
RU-106	1.11E-06	1.40E-03	4.00E-01	6.10E-07	1.00E+01	3.00E+02	6.86E-01	1.15E-01	2.00E+00	5.00E+00	1.85E-01	5.84E-01
AG-108	8.81E-06	1.50E-01	1.90E-03	1.90E-02	2.30E+00	7.70E+02	1.39E-01	1.62E-04	8.50E+01	7.20E+02	1.47E+00	5.77E-01
AG-110	1.66E-05	1.50E-01	1.90E-03	1.90E-02	2.30E+00	7.70E+02	9.92E-01	1.62E-04	8.50E+01	7.20E+02	2.72E+00	8.56E-01
CD-109	2.27E-07	3.00E-01	5.30E-04	1.00E-03	2.00E+02	2.00E+03	5.59E-01	1.48E-02	9.00E+00	7.30E+01	2.75E-02	2.59E-02
SN-113	1.48E-06	2.50E-03	8.00E-02	1.20E-03	3.00E+03	1.00E+03	2.20E+00	1.62E-04	8.50E+01	7.20E+02	2.56E-01	3.88E-01
SN-126	1.18E-05	2.50E-03	8.00E-02	1.20E-03	3.00E+03	1.00E+03	6.60E-06	1.62E-04	8.50E+01	7.20E+02	1.99E+00	4.83E-01
SB-124	1.11E-05	1.10E-02	4.00E-03	1.10E-04	1.00E+00	1.00E+01	4.20E+00	1.62E-04	9.00E+00	7.30E+01	1.81E+00	9.80E-01
SB-125	2.49E-06	1.10E-02	4.00E-03	1.10E-04	1.00E+00	1.00E+01	2.56E-01	1.62E-04	9.00E+00	7.30E+01	4.21E-01	4.88E-01
I-125	3.14E-07	4.50E-03	7.00E-03	9.90E-03	1.50E+01	5.00E+00	4.20E+00	1.15E-01	2.00E+00	5.00E+00	4.29E-02	2.93E-02
I-129	1.61E-08	4.50E-03	7.00E-03	9.90E-03	1.50E+01	5.00E+00	5.92E-08	1.15E-01	2.00E+00	5.00E+00	3.00E-03	4.00E-02
I-131	2.16E-06	4.50E-03	7.00E-03	9.90E-03	1.50E+01	5.00E+00	3.14E+01	1.15E-01	2.00E+00	5.00E+00	3.74E-01	3.78E-01
CS-134	9.41E-06	5.00E-03	1.40E-02	7.10E-03	2.00E+03	1.00E+02	3.38E-01	1.62E-04	8.50E+01	7.20E+02	1.56E+00	6.98E-01
CS-135	0.00E+00	5.00E-03	1.40E-02	7.10E-03	2.00E+03	1.00E+02	2.31E-07	1.62E-04	8.50E+01	7.20E+02	0.00E+00	0.00E+00
CS-136	1.30E-05	5.00E-03	1.40E-02	7.10E-03	2.00E+03	1.00E+02	1.85E+01	1.62E-04	8.50E+01	7.20E+02	2.15E+00	7.07E-01
CS-137	3.39E-06	5.00E-03	1.40E-02	7.10E-03	2.00E+03	1.00E+02	2.31E-02	1.62E-04	8.50E+01	7.20E+02	5.63E-01	6.62E-01
BA-140	1.05E-06	1.30E-03	9.70E-05	3.50E-04	4.00E+00	2.00E+02	1.97E+01	1.11E-04	9.00E+00	7.30E+01	1.78E-01	2.93E-01
LA-140	1.39E-05	2.50E-03	2.00E-04	2.00E-05	2.50E+01	1.00E+03	1.51E+02	1.11E-04	9.00E+00	7.30E+01	2.26E+00	1.10E+00
CE-141	3.70E-07	7.30E-04	1.20E-03	2.00E-05	1.00E+00	1.00E+03	7.79E+00	4.67E-04	8.40E+02	7.20E+03	7.64E-02	1.19E-01
CE-144	2.70E-07	7.30E-04	1.20E-03	2.00E-05	1.00E+00	1.00E+03	8.91E-01	4.67E-04	8.40E+02	7.20E+03	4.83E-02	1.90E-01
EU-152	6.20E-06	2.50E-03	4.80E-03	2.00E-05	2.50E+01	1.00E+03	5.46E-02	1.11E-04	9.00E+00	7.30E+01	1.03E+00	6.04E-01
EU-154	6.91E-06	2.50E-03	4.80E-03	2.00E-05	2.50E+01	1.00E+03	4.33E-02	1.11E-04	9.00E+00	7.30E+01	1.14E+00	7.39E-01
YB-169	1.41E-06	2.50E-03	4.00E-03	5.00E-06	2.50E+01	1.00E+03	7.96E+00	1.11E-04	9.00E+00	7.30E+01	3.05E-01	9.27E-02
PB-210	1.03E-08	4.00E-03	7.10E-04	1.20E-04	1.00E+02	1.00E+02	3.40E-02	4.11E-03	8.40E+02	7.20E+03	1.96E-03	4.08E-02
PO-210	1.09E-10	2.60E-04	4.00E-03	3.40E-04	5.00E+02	2.00E+04	1.83E+00	4.11E-03	9.00E+00	7.30E+01	1.25E-05	5.17E-02
RN-222	9.51E-06	3.50E+00	2.00E-02	2.00E-02	1.00E+00	1.00E+00	6.60E+01	1.00E+00	1.00E+00	1.00E+00	1.56E+00	8.37E-01
RA-226	3.16E-08	1.40E-02	5.10E-04	5.90E-04	5.00E+01	2.50E+02	4.33E-04	4.11E-03	3.00E+01	2.50E+02	6.16E-03	1.86E-01
RA-228	4.31E-06	1.40E-02	5.10E-04	5.90E-04	5.00E+01	2.50E+02	1.03E-01	4.11E-03	3.00E+01	2.50E+02	7.10E-01	7.40E-01
AC-227	1.78E-06	2.50E-03	6.00E-02	2.00E-05	2.50E+01	1.00E+03	3.21E-02	4.11E-03	3.00E+02	2.50E+03	3.19E-01	2.83E-01
TH-228	8.62E-06	4.20E-03	2.00E-04	5.00E-06	3.00E+01	5.00E+02	3.63E-01	4.11E-03	8.40E+02	7.20E+03	1.40E+00	9.62E-01
TH-229	1.20E-06	4.20E-03	2.00E-04	5.00E-06	3.00E+01	5.00E+02	9.44E-05	4.11E-03	8.40E+02	7.20E+03	2.12E-01	2.25E-01
TH-230	1.07E-09	4.20E-03	2.00E-04	5.00E-06	3.00E+01	5.00E+02	8.66E-06	4.11E-03	8.40E+02	7.20E+03	3.09E-04	7.54E-02
TH-232	0.00E+00	4.20E-03	2.00E-04	5.00E-06	3.00E+01	5.00E+02	4.92E-11	4.11E-03	8.40E+02	7.20E+03	0.00E+00	0.00E+00
PA-231	2.05E-07	2.50E-03	8.00E-02	5.00E-06	1.10E+01	1.10E+02	2.13E-05	4.11E-03	8.40E+02	7.20E+03	3.73E-02	1.39E-01
U-232	8.32E-10	2.50E-03	3.40E-04	6.10E-04	2.00E+00	6.00E+01	9.63E-03	1.25E-04	8.40E+02	7.20E+03	2.04E-04	7.58E-02
U-233	3.16E-10	2.50E-03	3.40E-04	6.10E-04	2.00E+00	6.00E+01	4.28E-06	1.25E-04	8.40E+02	7.20E+03	7.06E-05	8.01E-02
U-234	4.89E-10	2.50E-03	3.40E-04	6.10E-04	2.00E+00	6.00E+01	2.81E-06	1.25E-04	8.40E+02	7.20E+03	1.19E-04	7.13E-02
U-235	7.46E-07	2.50E-03	3.40E-04	6.10E-04	2.00E+00	6.00E+01	9.76E-10	1.25E-04	8.40E+02	7.20E+03	1.47E-01	1.47E-01
U-236	2.62E-10	2.50E-03	3.40E-04	6.10E-04	2.00E+00	6.00E+01	2.90E-08	1.25E-04	8.40E+02	7.20E+03	6.01E-05	6.14E-02
U-238	6.55E-08	2.50E-03	3.40E-04	6.10E-04	2.00E+00	6.00E+01	1.54E-10	1.25E-04	8.40E+02	7.20E+03	1.51E-02	1.42E-01
NP-237	1.10E-06	6.00E-02	2.00E-04	5.00E-06	1.00E+01	4.00E+02	3.24E-07	4.67E-04	3.00E+02	2.50E+03	2.18E-01	1.89E-01
PU-236	1.46E-10	5.60E-04	3.90E-04	1.00E-07	2.50E+01	1.00E+02	2.43E-01	4.67E-04	8.40E+02	7.20E+03	3.19E-05	7.21E-02
PU-238	1.09E-10	5.60E-04	3.90E-04	1.00E-07	2.50E+01	1.00E+02	8.02E-03	4.67E-04	8.40E+02	7.20E+03	2.64E-05	5.45E-02
PU-239	0.00E+00	5.60E-04	3.90E-04	1.00E-07	2.50E+01	1.00E+02	2.84E-05	4.67E-04	8.40E+02	7.20E+03	0.00E+00	0.00E+00

000508

TAPE1 (Continued)

PU-240	1.32E-10	5.60E-04	3.90E-04	1.00E-07	2.50E+01	1.00E+02	1.05E-04	4.67E-04	8.40E+02	7.20E+03	2.87E-05	5.45E-02
PU-241	1.37E-12	5.60E-04	3.90E-04	1.00E-07	2.50E+01	1.00E+02	5.25E-02	4.67E-04	8.40E+02	7.20E+03	2.83E-07	1.49E-01
PU-242	1.29E-10	5.60E-04	3.90E-04	1.00E-07	2.50E+01	1.00E+02	1.83E-06	4.67E-04	8.40E+02	7.20E+03	2.82E-05	5.53E-02
PU-244	1.62E-06	5.60E-04	3.90E-04	1.00E-07	2.50E+01	1.00E+02	9.12E-09	4.67E-04	8.40E+02	7.20E+03	2.69E-01	5.85E-01
AM-241	7.65E-08	5.60E-03	3.90E-03	4.10E-07	2.50E+02	1.00E+03	1.51E-03	4.11E-03	3.00E+02	2.50E+03	2.14E-02	6.00E-02
AM-243	9.41E-07	5.60E-03	3.90E-03	4.10E-07	2.50E+02	1.00E+03	8.72E-05	4.11E-03	3.00E+02	2.50E+03	2.19E-01	1.21E-01
CM-242	4.81E-10	2.50E-03	2.00E-04	2.00E-05	2.50E+01	1.00E+03	1.56E+00	4.67E-04	3.00E+02	2.50E+03	1.09E-04	9.32E-02
CM-243	5.55E-07	2.50E-03	2.00E-04	2.00E-05	2.50E+01	1.00E+03	2.17E-02	4.67E-04	3.00E+02	2.50E+03	1.17E-01	1.62E-01
CM-244	5.94E-11	2.50E-03	2.00E-04	2.00E-05	2.50E+01	1.00E+03	3.94E-02	4.67E-04	3.00E+02	2.50E+03	1.29E-05	4.65E-02
CM-248	0.00E+00	2.50E-03	2.00E-04	2.00E-05	2.50E+01	1.00E+03	1.47E-06	4.67E-04	3.00E+02	2.50E+03	0.00E+00	0.00E+00
CF-252	1.36E-08	2.50E-03	2.00E-04	2.00E-05	2.50E+01	1.00E+03	2.62E-01	4.11E-03	3.00E+02	2.50E+03	1.09E-03	1.72E-02

000509

6400

```
7.400E-02 2.660E-03 4.550E+02 2.375E+02 2.500E+03 5.000E+03 9.100E+02 4.550E+02 1.000E+04 2.000E+04
7.400E-02 2.660E-03 1.700E+02 9.500E+01 2.500E+03 5.000E+03 3.400E+02 1.700E+02 1.000E+04 2.000E+04
1.500E-01 5.390E-03 3.400E+01 1.700E+01 5.000E+02 1.000E+03 3.400E+02 1.700E+02 1.000E+04 2.000E+04
3.600E-02 1.290E-03 4.550E+02 2.375E+02 2.500E+03 5.000E+03 9.100E+02 4.550E+02 1.000E+04 2.000E+04
7.400E-02 2.660E-03 4.550E+02 2.375E+02 2.500E+03 5.000E+03 9.100E+02 4.550E+02 1.000E+04 2.000E+04
9.180E-12 2.960E-11 7.700E+03 2.000E+05 4.500E+06 5.050E-10 1.510E-09 1.110E-07 2.280E+03 7.060E-05
4.610E+00 9.680E-11 5.530E-07 5.530E-07 2.030E-06
  3
1.800E-01 6.470E-03 7.280E+01 4.640E+01 4.000E+02 8.000E+02 1.820E+03 9.100E+02 1.000E+04 2.000E+04
1.800E-01 6.470E-03 2.720E+01 2.360E+01 4.000E+02 8.000E+02 6.800E+02 3.400E+02 1.000E+04 2.000E+04
3.600E-01 1.290E-02 6.800E+00 3.400E+00 1.000E+02 2.000E+02 6.800E+02 3.400E+02 1.000E+04 2.000E+04
3.000E-02 1.080E-03 7.280E+01 4.640E+01 4.000E+02 8.000E+02 1.820E+03 9.100E+02 1.000E+04 2.000E+04
1.800E-01 6.470E-03 7.280E+01 4.640E+01 4.000E+02 8.000E+02 1.820E+03 9.100E+02 1.000E+04 2.000E+04
2.010E-11 3.180E-11 7.700E+03 2.000E+05 4.500E+06 1.750E-10 5.250E-10 1.110E-07 6.100E+02 7.060E-05
3.610E+00 1.400E-10 1.540E-08 1.540E-08 2.500E-06
  2
1.000E-03 3.600E-05 9.100E+00 2.800E+02 5.800E+02 8.800E+02 9.100E+02 4.550E+02 3.000E+04 6.000E+04
1.000E-03 3.600E-05 3.400E+00 2.800E+02 5.800E+02 8.800E+02 3.400E+02 1.700E+02 3.000E+04 6.000E+04
2.000E-03 7.190E-05 3.400E+00 2.800E+02 5.800E+02 8.800E+02 3.400E+02 1.700E+02 3.000E+04 6.000E+04
1.000E-03 3.600E-05 9.100E+00 2.800E+02 5.800E+02 8.800E+02 9.100E+02 4.550E+02 3.000E+04 6.000E+04
1.000E-03 3.600E-05 9.100E+00 2.800E+02 5.800E+02 8.800E+02 9.100E+02 4.550E+02 3.000E+04 6.000E+04
2.640E-10 8.060E-11 7.700E+03 2.000E+05 4.500E+05 1.330E-11 3.990E-11 0.000E+00 6.000E+01 3.920E-05
6.670E+00 4.110E-11 7.950E-06 7.950E-06 6.840E-05
  1
1.000E+01 2.000E+01 4.280E+05 9.100E-11 3.330E-01 1.000E+00 9.140E+04 9.100E-11 3.330E-01 1.000E+00
1.000E-10 2.000E-10 4.000E-10 1.000E-10 2.000E-10 4.000E-10 3.840E+02 3.840E+02 1.710E+02 5.900E-01
1.000E+00 4.370E+00 1.000E+00 1.000E+03
1.000E+01 2.000E+01 4.280E+05 1.600E-13 3.330E-01 2.700E-01 2.960E+04 9.100E-11 3.330E-01 5.900E-01
3.700E-10 7.410E-10 1.480E-09 1.700E-10 3.390E-10 6.780E-10 8.600E+01 7.100E+01 1.500E+01 5.900E-01
8.000E-01 7.310E+00 1.000E+00 1.000E+03
1.000E+01 2.000E+01 4.280E+05 1.600E-13 3.330E-01 2.700E-01 2.960E+04 9.100E-11 3.330E-01 4.300E-01
3.700E-10 7.410E-10 1.480E-09 3.490E-10 5.810E-10 1.160E-09 2.570E+02 2.120E+02 4.510E+01 8.700E-01
8.000E-01 7.310E+00 1.000E+00 3.000E+02
1.000E+02 3.500E+01 2.540E+04 1.600E-13 3.330E-01 1.000E+00 9.135E+04 9.100E-11 3.330E-01 1.000E+00
1.000E-10 2.000E-10 4.000E-10 1.000E-10 2.000E-10 4.000E-10 3.840E+02 3.840E+02 1.710E+02 4.100E-01
7.500E-01 4.370E+00 9.000E-01 1.000E+03
1.000E+02 3.500E+01 2.540E+04 1.600E-13 3.330E-01 1.000E+00 9.135E+04 9.100E-11 3.330E-01 1.000E+00
1.000E-10 2.000E-10 4.000E-10 1.000E-10 2.000E-10 4.000E-10 3.840E+02 3.840E+02 1.710E+02 4.100E-01
7.500E-01 4.370E+00 9.000E-01 1.000E+03
0.360     1.30E-02  6.8       3.4       100.      200.      680.      340.      10000.    20000.
 2.01E-11 3.18E-11  7700.     2.00E+05  4.50E+06  3.61      9.68E-11  5.53E-07
  1
 0.0      9.13E+04  107.      107.      107.      1.0       3.05      1.0       1.6       1.6
 1.0      1.0       1000.     5.00E-05
```


000510

APPENDIX G

EXAMPLE PROBLEM LISTINGS

APPENDIX G. Example Problem Listings

This appendix provides copies of the computer listings for the example problems considered in Chapter 8.0 of this report. Two example problems are considered for both the IMPACTS and INVIMPS computer codes.

IMPACTS Code Example Problems

The example problems are discussed in detail in Chapter 8.0. Briefly, however, IMPACTS example 1 consists of disposal of 80 metric tons of pressurized water reactor secondary coolant loop ion-exchange resins into five hazardous waste disposal facilities. Three sub-examples are actually considered in that impacts are compared for waste disposal into three different disposal site environments. IMPACTS example 2 consists of disposal of two waste streams into open dump disposal facilities located in the southeast site environment. One of the waste streams consists of contaminated trash and is incinerated prior to disposal. This waste stream is furthermore evenly distributed through 4 municipal incinerators and 16 open dumps. The other waste stream consists of ordinary dirt and is disposed directly into a single open dump.

The TAPE5 file for the two example problems follows, after which the problem listings are presented. User-supplied options regarding the treatment/disposal technologies to be considered, as well as the waste stream characteristics, are input using the TAPE5 file.

As shown, the IMPACTS output first reproduces much of the data input through the TAPE5 file. The type of disposal facility is first presented, followed by the remaining treatment/disposal technology and site environment decision indices. The following abbreviations apply (see Table 8-1):

Abbreviation	Index	Meaning
LIFE	ILFE	facility operational life
REGN	IR	region index
IPOP	IPOP	vicinity population density
OVFL	IOFL	leachale accumulation index
DATA	IDAT	additional data index
INST	IINS	institutional control period
NSTR	NSTR	number of waste streams

Next the waste stream title, annual disposed mass, and as-generated density are presented. This is followed by the ISPC indices (see Table 8-2). The word "PROCESS" refers to the waste processing index, IP. The remaining indices are as follows:

Index	Meaning
ID	dispersibility index
IA	accessibility index
IK1	first packaging index
IK2	second packaging index
IXs	distribution indices
ICs	waste composition indices

Calculated radiological impacts are then presented. Impacts from scenarios (abbreviated SCN) involving recycle of metal or glass scrap, recycle of metal packages as scrap, and waste transportation are calculated for only the total body. The remaining impacts are calculated for nine organs of the body plus the ICRP effective whole body dose equivalent. In order, the nine organs include lungs, stomach wall, lower large intestine, total body, kidneys, liver, red bone marrow, bone surface, and thyroid. In addition, the abbreviations for the impact scenarios have the following meanings:

000513

Impact Scenario	Units	Meaning
Metal package recycle:		
MAXIND	a	impacts to maximum individual
POPULN	c	population impacts
Metal material recycle:		
MAXIND	a	impacts to maximum individual
POPULN	c	population impacts
Glass material recycle:		
MAXIND	a	impacts to maximum individual
POPULN	c	population impacts
Transportation:		
TR-MAX	a	impacts to maximum transport worker
TR-OCC	b	total impacts to transport workers
TR-POP	b	impacts to population along transport route
Intruder:		
INT-CO	a	intruder-construction scenario impacts
INT-AG	a	intruder-agriculture scenario impacts
Exposed waste:		
IN-AIR	b	intruder-initiated airborne scenario impacts
ER-AIR	b	erosion-initiated airborne scenario impacts
IN-WAT	a	intruder-initiated waterborne scenario impacts
ER-WAT	a	erosion-initiated waterborne scenario impacts
Incineration and operational:		
IC-POP	b	population impacts from incineration
IC-IND	a	off-site individual impacts from incineration
IC-WOR	b	total worker impacts at incinerator
IC-MWR	a	maximum worker impacts at incinerator
OP-POP	b	population impacts from disposal operations
OP-IND	a	off-site individual impacts from disposal operations
OP-WOR	b	total worker impacts at disposal facility
OP-MWR	a	maximum worker impacts at disposal facility
Leachate accumulation:		
LA-OPS	a	operational leachate discharge impacts to individual
LA-OVF	a	leachate overflow impacts to individual
LA-AIR	b	population airborne impacts due to evaporator operations

a: mrem/yr; b: person-mrem/yr; c: person-mrem/30 yrs.

Groundwater impacts are determined at three locations down-gradient of the disposal facility (intruder well, population well, and surface water) for 16 time steps following closure of the disposal facility. All groundwater impacts are to an individual in units of mrem/yr.

Finally, it may be noted that the output format is somewhat altered for IMPACTS example 2 where two waste streams are considered. In this case, impacts for each waste stream are first presented separately. Then, cumulative impacts are presented for all impact scenarios except those involving waste transportation and glass or metal recycle.

INVIMPS Example Problems

The two example problems are discussed in Chapter 8.0. Briefly, however, a single hypothetical waste stream is considered for both examples which is assumed to be extremely dispersible yet have a significant metal/glass component. In INVIMPS example 1, 100 metric tons of this waste stream is assumed to be packaged and transported to a single hazardous waste disposal facility. In INVIMPS example 2, the waste stream is assumed to be transported to a single muncipal incinerator where recovery of scrap metal and glass is carried out. The incinerator residue is distributed through four sanitary landfills, as is the discard material from the metal/glass recovery process. In both examples, the dose limitation criteria is assumed to be 25 mrem/yr to each of the organs considered (including the ICRP effective whole body dose equivalent). Default solubility classes are used for all of the 85 radionuclides considered (see Table 8-10).

The listings for the two examples follow a copy of the examples' TAPE5 input file. The INVIMPS outputs list maximum radionuclide concentrations in units of Ci/m^3 for each scenario involving impacts to an individual. In practice, the computer code determines limiting radionuclide concentrations for each of nine organs plus the ICRP effective whole body equivalent (excepting recycle and transportation scenarios for which only total body impacts are considered). These calculations are fairly extensive, however, and the printed output can become fairly voluminous--particularly if several cases are considered. This output, termed the utility output, is therefore routinely stored on a file and the minimum radionuclide concentrations across the 10 organs are determined for each impact scenario. These minimum concentrations are then printed as a summary output. The utility output has more of a "boilerplate" appearance, but may also be printed by making some simple modifications to the code.

In this appendix, the summary output is first presented for INVIMPS example 1, followed by the utility output for this example problem, followed finally by the summary output for INVIMPS example 2. (The utility output for INVIMPS example 1 is 38 pages long and so has not been reproduced here.) As shown, most of the information input by the code user through the TAPE5 file is reproduced at the beginning of the summary output. Then, limiting concentrations are presented for each of the 15 impact scenarios considered and each of the 85 radionuclides. The following abbreviations are applicable for the summary output:

Abbreviation	Meaning
INT-CO	intruder-construction scenario
INT-AG	intruder-agriculture scenario
IN-WAT	intruder-initiated waterborne exposed waste scenario
ER-WAT	erosion-initiated waterborne exposed waste scenario
OP-IND	disposal facility operations, off-site individual
OP-MWR	disposal facility operations, maximum worker
LA-OPS	disposal facility operations, leachate accumulation and treatment
LA-OVF	leachate overflow following facility closure
TR-MAX	waste transportation, maximum worker
IC-IND	incinerator operations, off-site individual
IC-MWR	incinerator operations, maximum worker
INT-WL	intruder well
POP-WL	population well
POP-SW	surface water
RC-MPK	metal package recycle scenario
RC-MET	scrap metal component recycle scenario
RC-GLS	glass component recycle scenario

For the three groundwater scenarios, limiting concentrations are determined for each organ and each of the 16 time steps following disposal facility closure. The minimum radionuclide concentrations across the time steps are then determined for each organ, followed by determination of the minimum concentrations across all organs in the manner discussed above.

In addition, a word about notation. In some instances concentration limits for a given scenario may not be calculated. This is the case, for example, for scrap metal and glass recycle for INVIMPS example 1. In such cases, a zero is listed on the summary output as the concentration limit for each radionuclide. In other instances, the calculated radionuclide concentration may be so large that there is effectively no limit for a given scenario. Since printing the calculated concentration is meaningless in such cases, the following simple procedure has been adopted. Any calculated concentration exceeding an arbitrary value of 10^6 Ci/m^3 has been placed at infinity on the summary output. This turns out to be 10^{38} on the system upon which the code was written.

It may also be noted in the summary output that the radionuclide concentrations are listed in terms of "substream-1," "substream-2," and "all waste." This is because of the sorting options available for municipal waste incineration. That is, for sorting options 2 and 3 (IP = 4 or 5), waste input to the incinerator is separated into a combustible and non-combustible fraction. The combustible fraction is burned and the non-combustible fraction is either discarded (IP = 4) or further separated into a recycle fraction and a discard fraction (IP = 5). In either case, the original waste stream is divided into two completely new waste streams--i.e., the residue from combustion and the discard material. These two new waste streams are disposed, and limiting concentrations based upon impact scenarios involving the disposal facility are determined separately for each waste stream.

Thus, substream-1 refers to either the original waste stream or, if incineration is performed, the residue from combustion. Substream-2 refers only to the discard material. Concentrations listed under "all waste" refer to impact scenarios that are assumed to occur independently of whatever waste sorting operation is carried out, if any.

Considering INVIMPS example 1, only waste disposal occurs. Therefore, limiting groundwater concentrations for substream-2 are not determined. Neither are limiting concentrations determined for scrap metal or glass recycle. In INVIMPS example 2, however, recycle of metal and glass sorted from incinerated municipal waste does occur. In this case, substream-1 refers to impact scenarios involving disposal of incinerator residue, while substream-2 refers to impact scenarios involving disposal of the discard material from the sorting operations.

In the example utility output, calculated radionuclide concentrations for each organ are listed in the order that the organs are presented in the summary output. The lungs are listed first, followed by the stomach wall, large lower intestine, total body, kidneys, liver, red bone marrow, bone surface, thyroid, and ICRP effective whole body equivalent. Separate radionuclide concentrations are presented for each of the two possible substreams (ISTR = 1 or ISTR = 2) in the manner discussed above for the summary output. It may also be noticed that radionuclide concentrations for the transportation and recycle scenarios are not included on the utility output. This is because concentrations are only determined for these scenarios for the total body, and such concentrations are already listed completely in the summary output.

In the example utility output, the following abbreviations apply:

Abbreviation	Meaning
Intruder Scenario:	
CONS	intruder-construction scenario
AGRI	intruder-agriculture scenario
Exposed Waste:	
INT	intruder-initiated waterborne scenario
ERO	erosion-initiated waterborne scenario
Operational:	
IND	disposal facility operations, off-site individual
WRK	disposal facility operations, maximum worker
Overflow surface water:	
OV-OP	leachate accumulation of treatment during disposal facility operation
OV-PO	leachate overflow after facility closure
Groundwater:	
I-WL	intruder well
P-WL	population well
P-SW	surface water

000517

If incineration had been performed, two additional scenarios would have been considered. In such cases, radionuclide concentrations for the "off-site individual" would have been determined, as well as the "maximum worker."

```
  1  0  5  1  1 20 30  1
SEC-RESINS      80.00        1.0      80.00
   2    1    1   50    1   -1   -1   10  100    0    5    0    0    0  100
H-3    *  1.15E-04  C-14    *  4.25E-06  CR-51   Y  1.33E-03  MN-54   W  2.36E-05  FE-55   Y  2.08E-05
FE-59  Y  6.62E-05  CO-58   Y  3.92E-05  CO-60   Y  4.03E-05  ZN-65   Y  9.12E-06  NI-59   W  2.49E-08
NI-63  W  7.66E-06  SR-90   Y  8.42E-06  NB-94   Y  7.86E-10  ZR-95   Y  2.69E-05  TC-99   W  3.58E-08
RU-103 Y  9.37E-05  AG-110  Y  5.88E-05  I-129   D  1.06E-07  CS-134  D  3.19E-04  CS-135  D  3.58E-08
CS-137 D  9.54E-04  CE-141  Y  1.33E-04  CE-144  Y  1.47E-04  PU-238  Y  7.29E-06  PU-239  Y  3.69E-06
PU-241 Y  1.61E-04  PU-242  Y  8.08E-09  AM-241  Y  8.54E-06  AM-243  Y  5.76E-07  CM-242  Y  1.61E-05
CM-243 Y  3.94E-09  CM-244  Y  4.42E-06                                                                  $
  2  0  5  1  1 20 30  1
SEC-RESINS      80.00        1.0      80.00
   2    1    1   50    1   -1   -1   10  100    0    5    0    0    0  100
H-3    *  1.15E-04  C-14    *  4.25E-06  CR-51   Y  1.33E-03  MN-54   W  2.36E-05  FE-55   Y  2.08E-05
FE-59  Y  6.62E-05  CO-58   Y  3.92E-05  CO-60   Y  4.03E-05  ZN-65   Y  9.12E-06  NI-59   W  2.49E-08
NI-63  W  7.66E-06  SR-90   Y  8.42E-06  NB-94   Y  7.86E-10  ZR-95   Y  2.69E-05  TC-99   W  3.58E-08
RU-103 Y  9.37E-05  AG-110  Y  5.88E-05  I-129   D  1.06E-07  CS-134  D  3.19E-04  CS-135  D  3.58E-08
CS-137 D  9.54E-04  CE-141  Y  1.33E-04  CE-144  Y  1.47E-04  PU-238  Y  7.29E-06  PU-239  Y  3.69E-06
PU-241 Y  1.61E-04  PU-242  Y  8.08E-09  AM-241  Y  8.54E-06  AM-243  Y  5.76E-07  CM-242  Y  1.61E-05
CM-243 Y  3.94E-09  CM-244  Y  4.42E-06                                                                  $
  3  0  5  1  1 20 30  0
SEC-RESINS      80.00        1.0      80.00
   2    1    1   50    1   -1   -1   10  100    0    5    0    0    0  100
H-3    *  1.15E-04  C-14    *  4.25E-06  CR-51   Y  1.33E-03  MN-54   W  2.36E-05  FE-55   Y  2.08E-05
FE-59  Y  6.62E-05  CO-58   Y  3.92E-05  CO-60   Y  4.03E-05  ZN-65   Y  9.12E-06  NI-59   W  2.49E-08
NI-63  W  7.66E-06  SR-90   Y  8.42E-06  NB-94   Y  7.86E-10  ZR-95   Y  2.69E-05  TC-99   W  3.58E-08
RU-103 Y  9.37E-05  AG-110  Y  5.88E-05  I-129   D  1.06E-07  CS-134  D  3.19E-04  CS-135  D  3.58E-08
CS-137 D  9.54E-04  CE-141  Y  1.33E-04  CE-144  Y  1.47E-04  PU-238  Y  7.29E-06  PU-239  Y  3.69E-06
PU-241 Y  1.61E-04  PU-242  Y  8.08E-09  AM-241  Y  8.54E-06  AM-243  Y  5.76E-07  CM-242  Y  1.61E-05
CM-243 Y  3.94E-09  CM-244  Y  4.42E-06                                                                  $
  2  0  3  2  2 20  0  1
TRASH           100.         0.5       200.
   2    1    0    0    5   -1   -1   32   10    4   16   50   20   20   10
H-3    *  1.15E-04  C-14    *  4.25E-06  CR-51   Y  1.33E-03  MN-54   W  2.36E-05  FE-55   Y  2.08E-05
FE-59  Y  6.62E-05  CO-58   Y  3.92E-05  CO-60   Y  4.03E-05  ZN-65   Y  9.12E-06  NI-59   W  2.49E-08
NI-63  W  7.66E-06  SR-90   Y  8.42E-06  NB-94   Y  7.86E-10  ZR-95   Y  2.69E-05  TC-99   W  3.58E-08
RU-103 Y  9.37E-05  AG-110  Y  5.88E-05  I-129   D  1.06E-07  CS-134  D  3.19E-04  CS-135  D  3.58E-08
CS-137 D  9.54E-04  CE-141  Y  1.33E-04  CE-144  Y  1.47E-04  PU-238  Y  7.29E-06  PU-239  Y  3.69E-06
PU-241 Y  1.61E-04  PU-242  Y  8.08E-09  AM-241  Y  8.54E-06  AM-243  Y  5.76E-07  CM-242  Y  1.61E-05
CM-243 Y  3.94E-09  CM-244  Y  4.42E-06                                                                  $
CON-DIRT        500.         1.6      312.5
   3    1    0    0    1   -1   -1    3  100    0    1    0    0    0  100
U-238  Y  5.95E-07  U-234   Y  5.95E-07  TH-230  Y  5.95E-07  RA-226  W  5.95E-07  RN-222  *  5.95E-07
PO-210 W  5.95E-07  PB-210  W  5.95E-07  U-235   Y  2.75E-08  PA-231  Y  2.75E-08  AC-227  Y  2.75E-08
TH-232 Y  9.81E-07  TH-228  Y  9.81E-07  RA-228  W  9.81E-07                                              $
```


000519

IMPACTS Example 1
(IR=1)

HAZARDOUS WASTE II

LIFE= 20 OVFL= 1 NSTR= 1
REGN= 1 DATA= 0
IPOP= 1 INST= 30

WASTE: SEC-RESINS WEIGHT: 8.00E+01 MT DENSITY: 1.00E+00 MT/M3

ID= 2 IA= 1 IK1= 1 IK2= 50 PROCESS= 1
IXS= 10 100 0 5
ICS= 0 0 0 100

METAL PACKAGE RECYCLE IMPACTS MAXIND = 5.71E-04 MREM/YR
POPULN = 4.81E+01 PERSON-MREM/30YRS

TRANSPORTATION IMPACTS TR-MAX = 4.68E+00 MREM/YR
TR-OCC = 9.36E+01 MREM/YEAR
TR-POP = 6.41E+02 PERSON-MREM/YR

INTRUDER IMPACTS:

SCN	LUNGS	S. WALL	LLI WALL	T. BODY	KIDNEYS	LIVER	RED MAR	BONE	THYROID	ICRP
INT-CO	1.23E-02	1.22E-02	1.22E-02	1.22E-02	1.22E-02	1.24E-02	1.23E-02	1.31E-02	1.22E-02	1.23E-02
INT-AG	2.40E-02	2.38E-02	2.38E-02	2.38E-02	2.38E-02	2.41E-02	2.39E-02	2.51E-02	2.38E-02	2.39E-02

EXPOSED WASTE IMPACTS:

SCN	LUNGS	S. WALL	LLI WALL	T. BODY	KIDNEYS	LIVER	RED MAR	BONE	THYROID	ICRP
IN-AIR	1.16E-03	1.30E-05	1.93E-05	1.57E-04	2.48E-04	1.64E-03	6.44E-04	7.70E-03	5.89E-05	7.03E-04
ER-AIR	2.72E-01	6.18E-05	9.53E-04	3.33E-02	5.25E-02	4.07E-01	1.54E-01	2.03E+00	1.13E-02	1.69E-01
IN-WAT	1.21E-06	2.69E-07	3.55E-07	7.09E-07	1.18E-06	2.90E-06	1.62E-06	1.01E-05	8.30E-07	1.51E-06
ER-WAT	4.33E-06	7.90E-07	1.11E-05	3.23E-05	6.96E-05	5.34E-04	2.03E-04	2.54E-03	1.03E-05	1.46E-04

INCINERATION AND OPERATIONAL IMPACTS:

SCN	LUNGS	S. WALL	LLI WALL	T. BODY	KIDNEYS	LIVER	RED MAR	BONE	THYROID	ICRP
IC-POP	0.00E+00	0.00E+00	0.00E+00	0.00E+00	0.00E+00	0.00E+00	0.00E+00	0.00E+00	0.00E+00	0.00E+00
IC-IND	0.00E+00	0.00E+00	0.00E+00	0.00E+00	0.00E+00	0.00E+00	0.00E+00	0.00E+00	0.00E+00	0.00E+00
IC-WOR	0.00E+00	0.00E+00	0.00E+00	0.00E+00	0.00E+00	0.00E+00	0.00E+00	0.00E+00	0.00E+00	0.00E+00
IC-MWR	0.00E+00	0.00E+00	0.00E+00	0.00E+00	0.00E+00	0.00E+00	0.00E+00	0.00E+00	0.00E+00	0.00E+00
OP-POP	0.00E+00	0.00E+00	0.00E+00	0.00E+00	0.00E+00	0.00E+00	0.00E+00	0.00E+00	0.00E+00	0.00E+00
OP-IND	4.64E-11	1.43E-13	2.29E-13	4.50E-12	6.80E-12	5.09E-11	1.94E-11	2.42E-10	6.28E-13	2.27E-11
OP-WOR	1.48E+02	3.74E+01	3.76E+01	4.79E+01	5.34E+01	1.59E+02	8.36E+01	6.18E+02	3.86E+01	9.15E+01
OP-MWR	6.23E-01	2.40E-01	2.40E-01	2.76E-01	2.95E-01	6.60E-01	3.99E-01	2.24E+00	2.44E-01	4.26E-01

LEACHATE ACCUMULATION IMPACTS:

SCN	LUNGS	S. WALL	LLI WALL	T. BODY	KIDNEYS	LIVER	RED MAR	BONE	THYROID	ICRP
LA-OPS	5.52E-07	3.99E-07	1.09E-06	6.18E-07	9.64E-07	4.36E-06	1.92E-06	1.89E-05	9.27E-07	1.62E-06
LA-OVF	6.70E-05	3.05E-05	6.22E-05	1.19E-04	2.28E-04	1.44E-03	5.72E-04	6.61E-03	2.34E-04	4.33E-04
LA-AIR	3.32E-02	1.93E-02	2.56E-02	1.75E-02	1.91E-02	4.30E-02	2.63E-02	1.47E-01	3.68E-02	2.83E-02

GROUND WATER IMPACTS:

INTRUDER-WELL

TIME	LUNGS	S. WALL	LLI WALL	T. BODY	KIDNEYS	LIVER	RED MAR	BONE	THYROID	ICRP
20YR	0.00E+00	0.00E+00	0.00E+00	0.00E+00	0.00E+00	0.00E+00	0.00E+00	0.00E+00	0.00E+00	0.00E+00
40YR	0.00E+00	0.00E+00	0.00E+00	0.00E+00	0.00E+00	0.00E+00	0.00E+00	0.00E+00	0.00E+00	0.00E+00
60YR	0.00E+00	0.00E+00	0.00E+00	0.00E+00	0.00E+00	0.00E+00	0.00E+00	0.00E+00	0.00E+00	0.00E+00
80YR	0.00E+00	0.00E+00	0.00E+00	0.00E+00	0.00E+00	0.00E+00	0.00E+00	0.00E+00	0.00E+00	0.00E+00
100YR	0.00E+00	0.00E+00	0.00E+00	0.00E+00	0.00E+00	0.00E+00	0.00E+00	0.00E+00	0.00E+00	0.00E+00
120YR	0.00E+00	0.00E+00	0.00E+00	0.00E+00	0.00E+00	0.00E+00	0.00E+00	0.00E+00	0.00E+00	0.00E+00
160YR	0.00E+00	0.00E+00	0.00E+00	0.00E+00	0.00E+00	0.00E+00	0.00E+00	0.00E+00	0.00E+00	0.00E+00
200YR	0.00E+00	0.00E+00	0.00E+00	0.00E+00	0.00E+00	0.00E+00	0.00E+00	0.00E+00	0.00E+00	0.00E+00
400YR	1.73E-16	2.24E-16	2.97E-16	1.72E-16	1.78E-16	1.72E-16	1.71E-16	1.36E-16	1.72E-16	1.86E-16
600YR	2.19E-21	2.83E-21	3.74E-21	2.17E-21	2.24E-21	2.17E-21	2.16E-21	1.72E-21	2.17E-21	2.35E-21
800YR	2.02E-10	1.43E-10	4.35E-10	6.28E-10	2.05E-10	2.22E-10	2.18E-10	2.32E-10	1.42E-06	4.28E-08
1K YR	2.03E-10	1.44E-10	4.36E-10	6.31E-10	2.06E-10	2.23E-10	2.19E-10	2.34E-10	1.43E-06	4.30E-08
2K YR	3.82E-10	2.70E-10	8.21E-10	1.19E-09	3.89E-10	4.21E-10	4.13E-10	4.40E-10	2.70E-06	8.12E-08
5K YR	2.43E-09	2.88E-09	4.51E-09	6.19E-09	2.84E-09	3.23E-09	7.32E-09	1.44E-08	5.72E-06	1.75E-07
10K YR	3.38E-09	3.64E-09	6.44E-09	9.04E-09	3.84E-09	4.33E-09	8.78E-09	1.65E-08	1.14E-05	3.47E-07
20K YR	3.08E-09	2.90E-09	5.97E-09	8.73E-09	3.37E-09	3.74E-09	6.45E-09	1.13E-08	1.43E-05	4.32E-07

POPULATION-WELL

TIME	LUNGS	S. WALL	LLI WALL	T. BODY	KIDNEYS	LIVER	RED MAR	BONE	THYROID	ICRP
20YR	0.00E+00	0.00E+00	0.00E+00	0.00E+00	0.00E+00	0.00E+00	0.00E+00	0.00E+00	0.00E+00	0.00E+00
40YR	0.00E+00	0.00E+00	0.00E+00	0.00E+00	0.00E+00	0.00E+00	0.00E+00	0.00E+00	0.00E+00	0.00E+00
60YR	0.00E+00	0.00E+00	0.00E+00	0.00E+00	0.00E+00	0.00E+00	0.00E+00	0.00E+00	0.00E+00	0.00E+00
80YR	0.00E+00	0.00E+00	0.00E+00	0.00E+00	0.00E+00	0.00E+00	0.00E+00	0.00E+00	0.00E+00	0.00E+00
100YR	0.00E+00	0.00E+00	0.00E+00	0.00E+00	0.00E+00	0.00E+00	0.00E+00	0.00E+00	0.00E+00	0.00E+00
120YR	0.00E+00	0.00E+00	0.00E+00	0.00E+00	0.00E+00	0.00E+00	0.00E+00	0.00E+00	0.00E+00	0.00E+00
160YR	0.00E+00	0.00E+00	0.00E+00	0.00E+00	0.00E+00	0.00E+00	0.00E+00	0.00E+00	0.00E+00	0.00E+00
200YR	0.00E+00	0.00E+00	0.00E+00	0.00E+00	0.00E+00	0.00E+00	0.00E+00	0.00E+00	0.00E+00	0.00E+00
400YR	0.00E+00	0.00E+00	0.00E+00	0.00E+00	0.00E+00	0.00E+00	0.00E+00	0.00E+00	0.00E+00	0.00E+00
600YR	0.00E+00	0.00E+00	0.00E+00	0.00E+00	0.00E+00	0.00E+00	0.00E+00	0.00E+00	0.00E+00	0.00E+00
800YR	0.00E+00	0.00E+00	0.00E+00	0.00E+00	0.00E+00	0.00E+00	0.00E+00	0.00E+00	0.00E+00	0.00E+00
1K YR	0.00E+00	0.00E+00	0.00E+00	0.00E+00	0.00E+00	0.00E+00	0.00E+00	0.00E+00	0.00E+00	0.00E+00
2K YR	0.00E+00	0.00E+00	0.00E+00	0.00E+00	0.00E+00	0.00E+00	0.00E+00	0.00E+00	0.00E+00	0.00E+00
5K YR	0.00E+00	0.00E+00	0.00E+00	0.00E+00	0.00E+00	0.00E+00	0.00E+00	0.00E+00	0.00E+00	0.00E+00
10K YR	1.25E-10	8.66E-11	2.62E-10	3.90E-10	1.27E-10	1.37E-10	1.34E-10	1.43E-10	8.85E-07	2.66E-08
20K YR	4.12E-10	2.81E-10	8.48E-10	1.30E-09	4.18E-10	4.50E-10	4.45E-10	4.75E-10	2.95E-06	8.86E-08

POPULATION-SURFACE WATER

TIME	LUNGS	S. WALL	LLI WALL	T. BODY	KIDNEYS	LIVER	RED MAR	BONE	THYROID	ICRP
20YR	0.00E+00	0.00E+00	0.00E+00	0.00E+00	0.00E+00	0.00E+00	0.00E+00	0.00E+00	0.00E+00	0.00E+00
40YR	0.00E+00	0.00E+00	0.00E+00	0.00E+00	0.00E+00	0.00E+00	0.00E+00	0.00E+00	0.00E+00	0.00E+00
60YR	0.00E+00	0.00E+00	0.00E+00	0.00E+00	0.00E+00	0.00E+00	0.00E+00	0.00E+00	0.00E+00	0.00E+00
80YR	0.00E+00	0.00E+00	0.00E+00	0.00E+00	0.00E+00	0.00E+00	0.00E+00	0.00E+00	0.00E+00	0.00E+00
100YR	0.00E+00	0.00E+00	0.00E+00	0.00E+00	0.00E+00	0.00E+00	0.00E+00	0.00E+00	0.00E+00	0.00E+00
120YR	0.00E+00	0.00E+00	0.00E+00	0.00E+00	0.00E+00	0.00E+00	0.00E+00	0.00E+00	0.00E+00	0.00E+00
160YR	0.00E+00	0.00E+00	0.00E+00	0.00E+00	0.00E+00	0.00E+00	0.00E+00	0.00E+00	0.00E+00	0.00E+00
200YR	0.00E+00	0.00E+00	0.00E+00	0.00E+00	0.00E+00	0.00E+00	0.00E+00	0.00E+00	0.00E+00	0.00E+00
400YR	0.00E+00	0.00E+00	0.00E+00	0.00E+00	0.00E+00	0.00E+00	0.00E+00	0.00E+00	0.00E+00	0.00E+00
600YR	0.00E+00	0.00E+00	0.00E+00	0.00E+00	0.00E+00	0.00E+00	0.00E+00	0.00E+00	0.00E+00	0.00E+00
800YR	0.00E+00	0.00E+00	0.00E+00	0.00E+00	0.00E+00	0.00E+00	0.00E+00	0.00E+00	0.00E+00	0.00E+00
1K YR	0.00E+00	0.00E+00	0.00E+00	0.00E+00	0.00E+00	0.00E+00	0.00E+00	0.00E+00	0.00E+00	0.00E+00
2K YR	0.00E+00	0.00E+00	0.00E+00	0.00E+00	0.00E+00	0.00E+00	0.00E+00	0.00E+00	0.00E+00	0.00E+00
5K YR	0.00E+00	0.00E+00	0.00E+00	0.00E+00	0.00E+00	0.00E+00	0.00E+00	0.00E+00	0.00E+00	0.00E+00
10K YR	0.00E+00	0.00E+00	0.00E+00	0.00E+00	0.00E+00	0.00E+00	0.00E+00	0.00E+00	0.00E+00	0.00E+00
20K YR	1.09E-11	7.41E-12	2.24E-11	3.45E-11	1.11E-11	1.19E-11	1.18E-11	1.26E-11	7.85E-08	2.36E-09

000521

IMPACTS Example 1 (Continued)
(IR=2)

HAZARDOUS WASTE II

LIFE= 20 OVFL= 1 NSTR= 1
REGN= 2 DATA= 0
IPOP= 1 INST= 30

WASTE: SEC-RESINS WEIGHT: 8.00E+01 MT DENSITY: 1.00E+00 MT/M3

ID= 2 IA= 1 IK1= 1 IK2= 50 PROCESS= 1
IXS= 10 100 0 5
ICS= 0 0 0 100

METAL PACKAGE RECYCLE IMPACTS MAXIND = 5.71E-04 MREM/YR
POPULN = 4.81E+01 PERSON-MREM/30YRS

TRANSPORTATION IMPACTS TR-MAX = 4.68E+00 MREM/YR
TR-OCC = 9.36E+01 MREM/YEAR
TR-POP = 1.71E+02 PERSON-MREM/YR

INTRUDER IMPACTS:

SCN	LUNGS	S. WALL	LLI WALL	T. BODY	KIDNEYS	LIVER	RED MAR	BONE	THYROID	ICRP
INT-CO	1.25E-02	1.22E-02	1.22E-02	1.22E-02	1.23E-02	1.26E-02	1.24E-02	1.41E-02	1.22E-02	1.24E-02
INT-AG	2.40E-02	2.38E-02	2.38E-02	2.38E-02	2.38E-02	2.41E-02	2.39E-02	2.52E-02	2.38E-02	2.39E-02

EXPOSED WASTE IMPACTS:

SCN	LUNGS	S. WALL	LLI WALL	T. BODY	KIDNEYS	LIVER	RED MAR	BONE	THYROID	ICRP
IN-AIR	4.96E-04	5.53E-06	8.22E-06	6.70E-05	1.06E-04	7.01E-04	2.75E-04	3.28E-03	2.52E-05	3.00E-04
ER-AIR	2.64E-03	5.98E-07	9.23E-06	3.22E-04	5.09E-04	3.94E-03	1.49E-03	1.96E-02	1.10E-04	1.64E-03
IN-WAT	1.21E-06	2.69E-07	3.55E-07	7.09E-07	1.18E-06	2.90E-06	1.62E-06	1.01E-05	8.30E-07	1.51E-06
ER-WAT	4.33E-06	7.90E-07	1.11E-05	3.23E-05	6.96E-05	5.34E-04	2.03E-04	2.54E-03	1.03E-05	1.46E-04

INCINERATION AND OPERATIONAL IMPACTS:

SCN	LUNGS	S. WALL	LLI WALL	T. BODY	KIDNEYS	LIVER	RED MAR	BONE	THYROID	ICRP
IC-POP	0.00E+00	0.00E+00	0.00E+00	0.00E+00	0.00E+00	0.00E+00	0.00E+00	0.00E+00	0.00E+00	0.00E+00
IC-IND	0.00E+00	0.00E+00	0.00E+00	0.00E+00	0.00E+00	0.00E+00	0.00E+00	0.00E+00	0.00E+00	0.00E+00
IC-WOR	0.00E+00	0.00E+00	0.00E+00	0.00E+00	0.00E+00	0.00E+00	0.00E+00	0.00E+00	0.00E+00	0.00E+00
IC-MWR	0.00E+00	0.00E+00	0.00E+00	0.00E+00	0.00E+00	0.00E+00	0.00E+00	0.00E+00	0.00E+00	0.00E+00
OP-POP	0.00E+00	0.00E+00	0.00E+00	0.00E+00	0.00E+00	0.00E+00	0.00E+00	0.00E+00	0.00E+00	0.00E+00
OP-IND	6.71E-11	2.07E-13	3.31E-13	6.51E-12	9.83E-12	7.37E-11	2.81E-11	3.50E-10	9.08E-13	3.28E-11
OP-WOR	1.48E+02	3.74E+01	3.76E+01	4.79E+01	5.34E+01	1.59E+02	8.36E+01	6.18E+02	3.86E+01	9.15E+01
OP-MWR	6.23E-01	2.40E-01	2.40E-01	2.76E-01	2.95E-01	6.60E-01	3.99E-01	2.24E+00	2.44E-01	4.26E-01

LEACHATE ACCUMULATION IMPACTS:

SCN	LUNGS	S. WALL	LLI WALL	T. BODY	KIDNEYS	LIVER	RED MAR	BONE	THYROID	ICRP
LA-OPS	3.27E-06	2.36E-06	6.48E-06	3.66E-06	5.70E-06	2.58E-05	1.14E-05	1.12E-04	5.49E-06	9.57E-06
LA-OVF	1.63E-04	7.42E-05	1.51E-04	2.90E-04	5.55E-04	3.50E-03	1.39E-03	1.61E-02	5.70E-04	1.05E-03
LA-AIR	2.80E-02	1.63E-02	2.16E-02	1.48E-02	1.61E-02	3.63E-02	2.22E-02	1.24E-01	3.10E-02	2.38E-02

IMPACTS Example 1 (Continued)
(IR=2)

GROUND WATER IMPACTS:

INTRUDER-WELL

TIME	LUNGS	S. WALL	LLI WALL	T. BODY	KIDNEYS	LIVER	RED MAR	BONE	THYROID	ICRP
20YR	0.00E+00	0.00E+00	0.00E+00	0.00E+00	0.00E+00	0.00E+00	0.00E+00	0.00E+00	0.00E+00	0.00E+00
40YR	0.00E+00	0.00E+00	0.00E+00	0.00E+00	0.00E+00	0.00E+00	0.00E+00	0.00E+00	0.00E+00	0.00E+00
60YR	0.00E+00	0.00E+00	0.00E+00	0.00E+00	0.00E+00	0.00E+00	0.00E+00	0.00E+00	0.00E+00	0.00E+00
80YR	2.45E-08	3.17E-08	4.19E-08	2.43E-08	2.51E-08	2.43E-08	2.42E-08	1.92E-08	2.43E-08	2.63E-08
100YR	9.40E-09	1.21E-08	1.61E-08	9.34E-09	9.63E-09	9.31E-09	9.29E-09	7.38E-09	9.31E-09	1.01E-08
120YR	3.20E-09	4.04E-09	5.55E-09	3.51E-09	3.28E-09	3.19E-09	3.18E-09	2.57E-09	1.12E-06	3.69E-08
160YR	1.13E-09	1.17E-09	2.15E-09	2.17E-09	1.15E-09	1.17E-09	1.16E-09	1.07E-09	3.48E-06	1.05E-07
200YR	5.60E-10	4.36E-10	1.18E-09	1.60E-09	5.71E-10	6.09E-10	5.98E-10	6.21E-10	3.48E-06	1.05E-07
400YR	1.01E-09	7.18E-10	2.18E-09	3.15E-09	1.03E-09	1.11E-09	1.09E-09	1.17E-09	7.14E-06	2.15E-07
600YR	8.68E-09	1.10E-08	1.58E-08	2.13E-08	1.04E-08	1.19E-08	2.88E-08	5.80E-08	1.39E-05	4.31E-07
800YR	9.01E-09	1.11E-08	1.66E-08	2.25E-08	1.07E-08	1.22E-08	2.87E-08	5.72E-08	1.74E-05	5.35E-07
1K YR	9.65E-09	1.14E-08	1.80E-08	2.46E-08	1.13E-08	1.28E-08	2.90E-08	5.68E-08	2.30E-05	7.04E-07
2K YR	2.13E-08	2.68E-08	3.87E-08	5.23E-08	2.54E-08	2.91E-08	7.04E-08	1.42E-07	3.48E-05	1.08E-06
5K YR	3.24E-08	4.27E-08	5.78E-08	7.76E-08	3.94E-08	4.53E-08	1.15E-07	2.34E-07	3.48E-05	1.10E-06
10K YR	2.64E-08	3.41E-08	4.73E-08	6.40E-08	3.18E-08	3.65E-08	9.09E-08	1.84E-07	3.48E-05	1.08E-06
20K YR	1.28E-08	1.25E-08	2.36E-08	4.13E-08	3.82E-08	2.10E-07	1.04E-07	1.03E-06	3.48E-05	1.11E-06

POPULATION-WELL

TIME	LUNGS	S. WALL	LLI WALL	T. BODY	KIDNEYS	LIVER	RED MAR	BONE	THYROID	ICRP
20YR	0.00E+00	0.00E+00	0.00E+00	0.00E+00	0.00E+00	0.00E+00	0.00E+00	0.00E+00	0.00E+00	0.00E+00
40YR	0.00E+00	0.00E+00	0.00E+00	0.00E+00	0.00E+00	0.00E+00	0.00E+00	0.00E+00	0.00E+00	0.00E+00
60YR	0.00E+00	0.00E+00	0.00E+00	0.00E+00	0.00E+00	0.00E+00	0.00E+00	0.00E+00	0.00E+00	0.00E+00
80YR	0.00E+00	0.00E+00	0.00E+00	0.00E+00	0.00E+00	0.00E+00	0.00E+00	0.00E+00	0.00E+00	0.00E+00
100YR	0.00E+00	0.00E+00	0.00E+00	0.00E+00	0.00E+00	0.00E+00	0.00E+00	0.00E+00	0.00E+00	0.00E+00
120YR	0.00E+00	0.00E+00	0.00E+00	0.00E+00	0.00E+00	0.00E+00	0.00E+00	0.00E+00	0.00E+00	0.00E+00
160YR	0.00E+00	0.00E+00	0.00E+00	0.00E+00	0.00E+00	0.00E+00	0.00E+00	0.00E+00	0.00E+00	0.00E+00
200YR	0.00E+00	0.00E+00	0.00E+00	0.00E+00	0.00E+00	0.00E+00	0.00E+00	0.00E+00	0.00E+00	0.00E+00
400YR	3.49E-23	4.50E-23	5.96E-23	3.46E-23	3.57E-23	3.45E-23	3.45E-23	2.74E-23	3.45E-23	3.75E-23
600YR	8.01E-21	1.03E-20	1.37E-20	7.95E-21	8.20E-21	7.93E-21	7.92E-21	6.29E-21	7.93E-21	8.61E-21
800YR	1.17E-12	8.31E-13	2.53E-12	3.65E-12	1.19E-12	1.29E-12	1.27E-12	1.35E-12	8.28E-09	2.49E-10
1K YR	4.88E-10	3.45E-10	1.05E-09	1.52E-09	4.96E-10	5.37E-10	5.26E-10	5.62E-10	3.44E-06	1.04E-07
2K YR	2.13E-09	1.51E-09	4.57E-09	6.63E-09	2.17E-09	2.34E-09	2.30E-09	2.45E-09	1.50E-05	4.52E-07
5K YR	6.42E-09	7.37E-09	1.21E-08	1.66E-08	7.44E-09	8.44E-09	1.84E-08	3.57E-08	1.75E-05	5.32E-07
10K YR	1.21E-08	1.55E-08	2.18E-08	2.95E-08	1.46E-08	1.67E-08	4.11E-08	8.30E-08	1.75E-05	5.42E-07
20K YR	5.66E-09	6.25E-09	1.06E-08	1.50E-08	6.49E-09	7.32E-09	1.54E-08	2.95E-08	1.74E-05	5.30E-07

POPULATION-SURFACE WATER

TIME	LUNGS	S. WALL	LLI WALL	T. BODY	KIDNEYS	LIVER	RED MAR	BONE	THYROID	ICRP
20YR	0.00E+00	0.00E+00	0.00E+00	0.00E+00	0.00E+00	0.00E+00	0.00E+00	0.00E+00	0.00E+00	0.00E+00
40YR	0.00E+00	0.00E+00	0.00E+00	0.00E+00	0.00E+00	0.00E+00	0.00E+00	0.00E+00	0.00E+00	0.00E+00
60YR	0.00E+00	0.00E+00	0.00E+00	0.00E+00	0.00E+00	0.00E+00	0.00E+00	0.00E+00	0.00E+00	0.00E+00
80YR	0.00E+00	0.00E+00	0.00E+00	0.00E+00	0.00E+00	0.00E+00	0.00E+00	0.00E+00	0.00E+00	0.00E+00
100YR	0.00E+00	0.00E+00	0.00E+00	0.00E+00	0.00E+00	0.00E+00	0.00E+00	0.00E+00	0.00E+00	0.00E+00
120YR	0.00E+00	0.00E+00	0.00E+00	0.00E+00	0.00E+00	0.00E+00	0.00E+00	0.00E+00	0.00E+00	0.00E+00
160YR	0.00E+00	0.00E+00	0.00E+00	0.00E+00	0.00E+00	0.00E+00	0.00E+00	0.00E+00	0.00E+00	0.00E+00
200YR	0.00E+00	0.00E+00	0.00E+00	0.00E+00	0.00E+00	0.00E+00	0.00E+00	0.00E+00	0.00E+00	0.00E+00
400YR	0.00E+00	0.00E+00	0.00E+00	0.00E+00	0.00E+00	0.00E+00	0.00E+00	0.00E+00	0.00E+00	0.00E+00
600YR	0.00E+00	0.00E+00	0.00E+00	0.00E+00	0.00E+00	0.00E+00	0.00E+00	0.00E+00	0.00E+00	0.00E+00
800YR	1.78E-31	2.30E-31	3.05E-31	1.77E-31	1.82E-31	1.77E-31	1.76E-31	1.40E-31	1.77E-31	1.91E-31
1K YR	5.67E-32	7.32E-32	9.70E-32	5.63E-32	5.80E-32	5.61E-32	5.60E-32	4.45E-32	5.61E-32	6.09E-32
2K YR	3.35E-11	2.35E-11	7.14E-11	1.04E-10	3.40E-11	3.68E-11	3.61E-11	3.85E-11	2.37E-07	7.13E-09
5K YR	1.11E-10	7.77E-11	2.36E-10	3.48E-10	1.13E-10	1.22E-10	1.20E-10	1.28E-10	7.90E-07	2.38E-08
10K YR	3.62E-10	4.35E-10	6.64E-10	9.16E-10	4.26E-10	4.85E-10	1.12E-09	2.21E-09	7.90E-07	2.42E-08
20K YR	3.59E-10	4.29E-10	6.53E-10	9.10E-10	4.22E-10	4.81E-10	1.11E-09	2.19E-09	7.90E-07	2.42E-08

IMPACTS Example 1 (Continued)
(IR=3)

HAZARDOUS WASTE II

LIFE= 20 OVFL= 0 NSTR= 1
REGN= 3 DATA= 0
IPOP= 1 INST= 30

WASTE: SEC-RESINS WEIGHT: 8.00E+01 MT DENSITY: 1.00E+00 MT/M3

ID= 2 IA= 1 IK1= 1 IK2= 50 PROCESS= 1
IXS= 10 100 0 5
ICS= 0 0 0 100

METAL PACKAGE RECYCLE IMPACTS MAXIND = 5.71E-04 MREM/YR
POPULN = 4.81E+01 PERSON-MREM/30YRS

TRANSPORTATION IMPACTS TR-MAX = 4.68E+00 MREM/YR
TR-OCC = 9.36E+01 MREM/YEAR
TR-POP = 9.37E+00 PERSON-MREM/YR

INTRUDER IMPACTS:

SCN	LUNGS	S. WALL	LLI WALL	T. BODY	KIDNEYS	LIVER	RED MAR	BONE	THYROID	ICRP
INT-CO	1.61E-02	1.22E-02	1.22E-02	1.26E-02	1.29E-02	1.73E-02	1.41E-02	3.65E-02	1.23E-02	1.44E-02
INT-AG	2.43E-02	2.38E-02	2.38E-02	2.38E-02	2.39E-02	2.45E-02	2.41E-02	2.72E-02	2.38E-02	2.41E-02

EXPOSED WASTE IMPACTS:

SCN	LUNGS	S. WALL	LLI WALL	T. BODY	KIDNEYS	LIVER	RED MAR	BONE	THYROID	ICRP
IN-AIR	1.03E-03	1.15E-05	1.71E-05	1.39E-04	2.20E-04	1.46E-03	5.71E-04	6.83E-03	5.23E-05	6.24E-04
ER-AIR	1.04E-01	2.35E-05	3.62E-04	1.26E-02	2.00E-02	1.55E-01	5.86E-02	7.70E-01	4.30E-03	6.43E-02
IN-WAT	0.00E+00	0.00E+00	0.00E+00	0.00E+00	0.00E+00	0.00E+00	0.00E+00	0.00E+00	0.00E+00	0.00E+00
ER-WAT	0.00E+00	0.00E+00	0.00E+00	0.00E+00	0.00E+00	0.00E+00	0.00E+00	0.00E+00	0.00E+00	0.00E+00

INCINERATION AND OPERATIONAL IMPACTS:

SCN	LUNGS	S. WALL	LLI WALL	T. BODY	KIDNEYS	LIVER	RED MAR	BONE	THYROID	ICRP
IC-POP	0.00E+00	0.00E+00	0.00E+00	0.00E+00	0.00E+00	0.00E+00	0.00E+00	0.00E+00	0.00E+00	0.00E+00
IC-IND	0.00E+00	0.00E+00	0.00E+00	0.00E+00	0.00E+00	0.00E+00	0.00E+00	0.00E+00	0.00E+00	0.00E+00
IC-WOR	0.00E+00	0.00E+00	0.00E+00	0.00E+00	0.00E+00	0.00E+00	0.00E+00	0.00E+00	0.00E+00	0.00E+00
IC-MWR	0.00E+00	0.00E+00	0.00E+00	0.00E+00	0.00E+00	0.00E+00	0.00E+00	0.00E+00	0.00E+00	0.00E+00
OP-POP	0.00E+00	0.00E+00	0.00E+00	0.00E+00	0.00E+00	0.00E+00	0.00E+00	0.00E+00	0.00E+00	0.00E+00
OP-IND	1.97E-11	6.09E-14	9.73E-14	1.91E-12	2.89E-12	2.16E-11	8.24E-12	1.03E-10	2.67E-13	9.63E-12
OP-WOR	1.48E+02	3.74E+01	3.76E+01	4.79E+01	5.34E+01	1.59E+02	8.36E+01	6.18E+02	3.86E+01	9.15E+01
OP-MWR	6.23E-01	2.40E-01	2.40E-01	2.76E-01	2.95E-01	6.60E-01	3.99E-01	2.24E+00	2.44E-01	4.26E-01

LEACHATE ACCUMULATION IMPACTS:

SCN	LUNGS	S. WALL	LLI WALL	T. BODY	KIDNEYS	LIVER	RED MAR	BONE	THYROID	ICRP
LA-OPS	0.00E+00	0.00E+00	0.00E+00	0.00E+00	0.00E+00	0.00E+00	0.00E+00	0.00E+00	0.00E+00	0.00E+00
LA-OVF	0.00E+00	0.00E+00	0.00E+00	0.00E+00	0.00E+00	0.00E+00	0.00E+00	0.00E+00	0.00E+00	0.00E+00
LA-AIR	0.00E+00	0.00E+00	0.00E+00	0.00E+00	0.00E+00	0.00E+00	0.00E+00	0.00E+00	0.00E+00	0.00E+00

GROUND WATER IMPACTS:

INTRUDER-WELL

TIME	LUNGS	S. WALL	LLI WALL	T. BODY	KIDNEYS	LIVER	RED MAR	BONE	THYROID	ICRP
20YR	0.00E+00	0.00E+00	0.00E+00	0.00E+00	0.00E+00	0.00E+00	0.00E+00	0.00E+00	0.00E+00	0.00E+00
40YR	0.00E+00	0.00E+00	0.00E+00	0.00E+00	0.00E+00	0.00E+00	0.00E+00	0.00E+00	0.00E+00	0.00E+00
60YR	0.00E+00	0.00E+00	0.00E+00	0.00E+00	0.00E+00	0.00E+00	0.00E+00	0.00E+00	0.00E+00	0.00E+00
80YR	0.00E+00	0.00E+00	0.00E+00	0.00E+00	0.00E+00	0.00E+00	0.00E+00	0.00E+00	0.00E+00	0.00E+00
100YR	0.00E+00	0.00E+00	0.00E+00	0.00E+00	0.00E+00	0.00E+00	0.00E+00	0.00E+00	0.00E+00	0.00E+00
120YR	0.00E+00	0.00E+00	0.00E+00	0.00E+00	0.00E+00	0.00E+00	0.00E+00	0.00E+00	0.00E+00	0.00E+00
160YR	0.00E+00	0.00E+00	0.00E+00	0.00E+00	0.00E+00	0.00E+00	0.00E+00	0.00E+00	0.00E+00	0.00E+00
200YR	0.00E+00	0.00E+00	0.00E+00	0.00E+00	0.00E+00	0.00E+00	0.00E+00	0.00E+00	0.00E+00	0.00E+00
400YR	1.68E-18	2.17E-18	2.88E-18	1.67E-18	1.72E-18	1.67E-18	1.66E-18	1.32E-18	1.67E-18	1.81E-18
600YR	2.11E-13	1.50E-13	4.55E-13	6.57E-13	2.15E-13	2.32E-13	2.28E-13	2.43E-13	1.49E-09	4.48E-11
800YR	1.99E-12	1.41E-12	4.28E-12	6.18E-12	2.02E-12	2.19E-12	2.14E-12	2.29E-12	1.40E-08	4.22E-10
1K YR	1.99E-12	1.41E-12	4.27E-12	6.18E-12	2.02E-12	2.19E-12	2.14E-12	2.29E-12	1.40E-08	4.22E-10
2K YR	1.98E-12	1.40E-12	4.26E-12	6.18E-12	2.02E-12	2.18E-12	2.14E-12	2.29E-12	1.40E-08	4.22E-10
5K YR	1.78E-11	2.40E-11	3.15E-11	4.21E-11	2.18E-11	2.52E-11	6.53E-11	1.34E-10	1.40E-08	4.50E-10
10K YR	1.06E-11	1.37E-11	1.91E-11	2.58E-11	1.28E-11	1.47E-11	3.66E-11	7.42E-11	1.40E-08	4.37E-10
20K YR	4.54E-12	5.02E-12	8.47E-12	1.20E-11	5.21E-12	5.88E-12	1.24E-11	2.37E-11	1.40E-08	4.26E-10

POPULATION-WELL

TIME	LUNGS	S. WALL	LLI WALL	T. BODY	KIDNEYS	LIVER	RED MAR	BONE	THYROID	ICRP
20YR	0.00E+00	0.00E+00	0.00E+00	0.00E+00	0.00E+00	0.00E+00	0.00E+00	0.00E+00	0.00E+00	0.00E+00
40YR	0.00E+00	0.00E+00	0.00E+00	0.00E+00	0.00E+00	0.00E+00	0.00E+00	0.00E+00	0.00E+00	0.00E+00
60YR	0.00E+00	0.00E+00	0.00E+00	0.00E+00	0.00E+00	0.00E+00	0.00E+00	0.00E+00	0.00E+00	0.00E+00
80YR	0.00E+00	0.00E+00	0.00E+00	0.00E+00	0.00E+00	0.00E+00	0.00E+00	0.00E+00	0.00E+00	0.00E+00
100YR	0.00E+00	0.00E+00	0.00E+00	0.00E+00	0.00E+00	0.00E+00	0.00E+00	0.00E+00	0.00E+00	0.00E+00
120YR	0.00E+00	0.00E+00	0.00E+00	0.00E+00	0.00E+00	0.00E+00	0.00E+00	0.00E+00	0.00E+00	0.00E+00
160YR	0.00E+00	0.00E+00	0.00E+00	0.00E+00	0.00E+00	0.00E+00	0.00E+00	0.00E+00	0.00E+00	0.00E+00
200YR	0.00E+00	0.00E+00	0.00E+00	0.00E+00	0.00E+00	0.00E+00	0.00E+00	0.00E+00	0.00E+00	0.00E+00
400YR	0.00E+00	0.00E+00	0.00E+00	0.00E+00	0.00E+00	0.00E+00	0.00E+00	0.00E+00	0.00E+00	0.00E+00
600YR	1.80E-27	2.32E-27	3.08E-27	1.79E-27	1.84E-27	1.78E-27	1.78E-27	1.41E-27	1.78E-27	1.93E-27
800YR	1.04E-29	1.35E-29	1.78E-29	1.03E-29	1.07E-29	1.03E-29	1.03E-29	8.18E-30	1.03E-29	1.12E-29
1K YR	0.00E+00	0.00E+00	0.00E+00	0.00E+00	0.00E+00	0.00E+00	0.00E+00	0.00E+00	0.00E+00	0.00E+00
2K YR	7.64E-14	5.40E-14	1.64E-13	2.38E-13	7.78E-14	8.41E-14	8.24E-14	8.80E-14	5.40E-10	1.62E-11
5K YR	7.62E-14	5.36E-14	1.63E-13	2.38E-13	7.75E-14	8.37E-14	8.23E-14	8.78E-14	5.40E-10	1.62E-11
10K YR	4.10E-13	5.28E-13	7.34E-13	9.92E-13	4.94E-13	5.67E-13	1.41E-12	2.86E-12	5.40E-10	1.68E-11
20K YR	1.75E-13	1.93E-13	3.26E-13	4.62E-13	2.01E-13	2.26E-13	4.77E-13	9.13E-13	5.39E-10	1.64E-11

POPULATION-SURFACE WATER

TIME	LUNGS	S. WALL	LLI WALL	T. BODY	KIDNEYS	LIVER	RED MAR	BONE	THYROID	ICRP
20YR	0.00E+00	0.00E+00	0.00E+00	0.00E+00	0.00E+00	0.00E+00	0.00E+00	0.00E+00	0.00E+00	0.00E+00
40YR	0.00E+00	0.00E+00	0.00E+00	0.00E+00	0.00E+00	0.00E+00	0.00E+00	0.00E+00	0.00E+00	0.00E+00
60YR	0.00E+00	0.00E+00	0.00E+00	0.00E+00	0.00E+00	0.00E+00	0.00E+00	0.00E+00	0.00E+00	0.00E+00
80YR	0.00E+00	0.00E+00	0.00E+00	0.00E+00	0.00E+00	0.00E+00	0.00E+00	0.00E+00	0.00E+00	0.00E+00
100YR	0.00E+00	0.00E+00	0.00E+00	0.00E+00	0.00E+00	0.00E+00	0.00E+00	0.00E+00	0.00E+00	0.00E+00
120YR	0.00E+00	0.00E+00	0.00E+00	0.00E+00	0.00E+00	0.00E+00	0.00E+00	0.00E+00	0.00E+00	0.00E+00
160YR	0.00E+00	0.00E+00	0.00E+00	0.00E+00	0.00E+00	0.00E+00	0.00E+00	0.00E+00	0.00E+00	0.00E+00
200YR	0.00E+00	0.00E+00	0.00E+00	0.00E+00	0.00E+00	0.00E+00	0.00E+00	0.00E+00	0.00E+00	0.00E+00
400YR	0.00E+00	0.00E+00	0.00E+00	0.00E+00	0.00E+00	0.00E+00	0.00E+00	0.00E+00	0.00E+00	0.00E+00
600YR	0.00E+00	0.00E+00	0.00E+00	0.00E+00	0.00E+00	0.00E+00	0.00E+00	0.00E+00	0.00E+00	0.00E+00
800YR	0.00E+00	0.00E+00	0.00E+00	0.00E+00	0.00E+00	0.00E+00	0.00E+00	0.00E+00	0.00E+00	0.00E+00
1K YR	0.00E+00	0.00E+00	0.00E+00	0.00E+00	0.00E+00	0.00E+00	0.00E+00	0.00E+00	0.00E+00	0.00E+00
2K YR	0.00E+00	0.00E+00	0.00E+00	0.00E+00	0.00E+00	0.00E+00	0.00E+00	0.00E+00	0.00E+00	0.00E+00
5K YR	0.00E+00	0.00E+00	0.00E+00	0.00E+00	0.00E+00	0.00E+00	0.00E+00	0.00E+00	0.00E+00	0.00E+00
10K YR	0.00E+00	0.00E+00	0.00E+00	0.00E+00	0.00E+00	0.00E+00	0.00E+00	0.00E+00	0.00E+00	0.00E+00
20K YR	0.00E+00	0.00E+00	0.00E+00	0.00E+00	0.00E+00	0.00E+00	0.00E+00	0.00E+00	0.00E+00	0.00E+00

IMPACTS Example 2

OPEN DUMP FACILITY

LIFE= 20 OVFL= 1 NSTR= 2
REGN= 2 DATA= 0
IPOP= 2 INST= 0

WASTE: TRASH WEIGHT: 1.00E+02 MT DENSITY: 5.00E-01 MT/M3

ID= 2 IA= 1 IK1= 0 IK2= 0 PROCESS= 5
IXS= 32 10 4 16
ICS= 50 20 20 10

METAL MATERIAL RECYCLE IMPACTS MAXIND = 3.21E-01 MREM/YR
POPULN = 2.16E+04 PERSON-MREM/30YRS

GLASS MATERIAL RECYCLE IMPACTS MAXIND = 3.32E+00 MREM/YR
POPULN = 9.51E+03 PERSON-MREM/30YRS

TRANSPORTATION IMPACTS TR-MAX = 1.15E+00 MREM/YR
TR-OCC = 7.33E+01 MREM/YEAR
TR-POP = 4.80E+01 PERSON-MREM/YR

INTRUDER IMPACTS:

SCN	LUNGS	S. WALL	LLI WALL	T. BODY	KIDNEYS	LIVER	RED MAR	BONE	THYROID	ICRP
INT-CO	4.76E-02	4.74E-02	4.74E-02	4.74E-02	4.74E-02	4.76E-02	4.75E-02	4.87E-02	4.74E-02	4.75E-02
INT-AG	1.96E-01	1.95E-01	1.95E-01	1.95E-01	1.95E-01	1.96E-01	1.95E-01	1.97E-01	1.95E-01	1.95E-01

EXPOSED WASTE IMPACTS:

SCN	LUNGS	S. WALL	LLI WALL	T. BODY	KIDNEYS	LIVER	RED MAR	BONE	THYROID	ICRP
IN-AIR	3.11E-02	9.83E-04	1.88E-03	4.43E-03	6.75E-03	3.59E-02	1.49E-02	1.61E-01	2.55E-03	1.70E-02
ER-AIR	2.29E-02	3.70E-06	7.89E-05	2.82E-03	4.49E-03	3.48E-02	1.32E-02	1.69E-01	6.20E-04	1.42E-02
IN-WAT	5.28E-06	1.40E-06	2.09E-06	2.67E-06	4.13E-06	6.31E-06	4.52E-06	1.50E-05	3.26E-06	4.83E-06
ER-WAT	1.78E-06	1.82E-07	3.20E-06	1.17E-05	2.55E-05	1.95E-04	7.37E-05	9.22E-04	2.50E-06	5.31E-05

INCINERATION AND OPERATIONAL IMPACTS:

SCN	LUNGS	S. WALL	LLI WALL	T. BODY	KIDNEYS	LIVER	RED MAR	BONE	THYROID	ICRP
IC-POP	7.34E+01	3.39E+00	6.50E+00	1.15E+01	1.67E+01	8.48E+01	3.64E+01	3.79E+02	7.23E+00	4.09E+01
IC-IND	5.59E-04	2.58E-05	4.95E-05	8.74E-05	1.27E-04	6.46E-04	2.77E-04	2.89E-03	5.50E-05	3.11E-04
IC-WOR	5.78E+01	5.77E+01	5.77E+01	5.77E+01	5.77E+01	5.78E+01	5.77E+01	5.80E+01	5.77E+01	5.77E+01
IC-MWR	3.96E-01	3.94E-01	3.94E-01	3.94E-01	3.94E-01	3.96E-01	3.95E-01	4.02E-01	3.94E-01	3.95E-01
OP-POP	3.55E+02	1.19E+01	2.57E+01	5.12E+01	7.75E+01	4.10E+02	1.71E+02	1.84E+03	3.17E+01	1.95E+02
OP-IND	1.38E-01	4.61E-03	9.98E-03	1.99E-02	3.01E-02	1.59E-01	6.64E-02	7.14E-01	1.23E-02	7.57E-02
OP-WOR	2.94E+00	2.92E+00	2.92E+00	2.92E+00	2.92E+00	2.94E+00	2.93E+00	3.05E+00	2.92E+00	2.93E+00
OP-MWR	1.84E-01	1.82E-01	1.82E-01	1.82E-01	1.82E-01	1.84E-01	1.83E-01	1.91E-01	1.82E-01	1.83E-01

LEACHATE ACCUMULATION IMPACTS:

SCN	LUNGS	S. WALL	LLI WALL	T. BODY	KIDNEYS	LIVER	RED MAR	BONE	THYROID	ICRP
LA-OPS	2.98E-07	1.22E-07	6.33E-07	3.53E-07	6.38E-07	3.47E-06	1.44E-06	1.56E-05	6.10E-07	1.17E-06
LA-OVF	2.31E-05	9.47E-06	4.91E-05	2.74E-05	4.94E-05	2.69E-04	1.12E-04	1.21E-03	4.73E-05	9.10E-05
LA-AIR	1.86E-01	8.07E-02	1.18E-01	7.81E-02	8.86E-02	2.48E-01	1.34E-01	9.33E-01	1.96E-01	1.48E-01

GROUND WATER IMPACTS

INTRUDER-WELL

TIME	LUNGS	S. WALL	LLI WALL	T. BODY	KIDNEYS	LIVER	RED MAR	BONE	THYROID	ICRP
20YR	3.62E-07	4.67E-07	6.20E-07	3.61E-07	3.71E-07	3.59E-07	3.58E-07	2.84E-07	5.54E-06	5.44E-07
40YR	2.38E-07	3.07E-07	5.02E-07	2.47E-07	2.44E-07	2.37E-07	2.63E-07	2.46E-07	1.19E-05	6.16E-07
60YR	1.18E-07	1.52E-07	2.60E-07	1.28E-07	1.21E-07	1.18E-07	1.36E-07	1.36E-07	1.65E-05	6.24E-07
80YR	4.64E-08	5.85E-08	1.16E-07	5.76E-08	4.80E-08	4.73E-08	6.05E-08	6.97E-08	2.33E-05	7.51E-07
100YR	2.02E-08	2.44E-08	7.85E-08	3.41E-08	2.13E-08	2.18E-08	3.84E-08	5.80E-08	2.78E-05	8.59E-07
120YR	1.36E-08	1.54E-08	5.16E-08	3.08E-08	1.49E-08	1.60E-08	3.27E-08	5.67E-08	3.48E-05	1.06E-06
160YR	1.04E-08	1.09E-08	3.44E-08	2.82E-08	1.16E-08	1.29E-08	2.70E-08	4.95E-08	3.87E-05	1.17E-06
200YR	1.20E-08	1.32E-08	2.84E-08	3.20E-08	1.37E-08	1.54E-08	3.28E-08	6.22E-08	3.87E-05	1.18E-06
400YR	1.81E-08	2.18E-08	3.35E-08	4.55E-08	2.13E-08	2.43E-08	5.60E-08	1.11E-07	3.87E-05	1.19E-06
600YR	2.38E-08	3.00E-08	4.34E-08	5.86E-08	2.85E-08	3.26E-08	7.89E-08	1.59E-07	3.88E-05	1.20E-06
800YR	2.54E-08	3.23E-08	4.61E-08	6.22E-08	3.05E-08	3.49E-08	8.53E-08	1.72E-07	3.88E-05	1.20E-06
1K YR	4.10E-08	3.23E-08	7.24E-08	1.89E-07	3.11E-07	2.20E-06	9.00E-07	1.05E-05	3.88E-05	1.79E-06
2K YR	3.76E-08	2.91E-08	6.62E-08	1.71E-07	2.80E-07	1.98E-06	8.10E-07	9.65E-06	3.88E-05	1.73E-06
5K YR	3.26E-08	2.19E-08	6.53E-08	1.56E-07	2.65E-07	1.92E-06	7.66E-07	9.56E-06	3.88E-05	1.71E-06
10K YR	3.32E-08	1.45E-08	7.17E-08	1.88E-07	3.56E-07	2.66E-06	1.03E-06	1.33E-05	3.87E-05	1.91E-06
20K YR	2.00E-08	4.20E-09	5.18E-08	1.36E-07	2.91E-07	2.23E-06	8.46E-07	1.11E-05	1.11E-06	6.57E-07

POPULATION-WELL

TIME	LUNGS	S. WALL	LLI WALL	T. BODY	KIDNEYS	LIVER	RED MAR	BONE	THYROID	ICRP
20YR	0.00E+00	0.00E+00	0.00E+00	0.00E+00	0.00E+00	0.00E+00	0.00E+00	0.00E+00	0.00E+00	0.00E+00
40YR	0.00E+00	0.00E+00	0.00E+00	0.00E+00	0.00E+00	0.00E+00	0.00E+00	0.00E+00	0.00E+00	0.00E+00
60YR	0.00E+00	0.00E+00	0.00E+00	0.00E+00	0.00E+00	0.00E+00	0.00E+00	0.00E+00	0.00E+00	0.00E+00
80YR	0.00E+00	0.00E+00	0.00E+00	0.00E+00	0.00E+00	0.00E+00	0.00E+00	0.00E+00	0.00E+00	0.00E+00
100YR	1.21E-10	1.57E-10	2.08E-10	1.20E-10	1.24E-10	1.20E-10	1.20E-10	9.52E-11	1.20E-10	1.30E-10
120YR	2.65E-10	3.43E-10	4.54E-10	2.63E-10	2.72E-10	2.63E-10	2.62E-10	2.08E-10	2.63E-10	2.85E-10
160YR	7.56E-11	9.77E-11	1.29E-10	7.51E-11	7.74E-11	7.49E-11	7.47E-11	5.93E-11	7.49E-11	8.12E-11
200YR	5.89E-11	4.68E-11	1.23E-10	1.65E-10	6.01E-11	6.40E-11	6.28E-11	6.48E-11	3.56E-07	1.07E-08
400YR	1.00E-09	7.09E-10	2.16E-09	3.11E-09	1.02E-09	1.10E-09	1.08E-09	1.15E-09	7.06E-06	2.12E-07
600YR	1.00E-09	7.09E-10	2.15E-09	3.11E-09	1.02E-09	1.10E-09	1.08E-09	1.15E-09	7.06E-06	2.12E-07
800YR	1.00E-09	7.08E-10	2.15E-09	3.11E-09	1.02E-09	1.10E-09	1.08E-09	1.15E-09	7.06E-06	2.12E-07
1K YR	1.18E-09	9.63E-10	2.46E-09	3.52E-09	1.24E-09	1.36E-09	1.79E-09	2.63E-09	7.06E-06	2.13E-07
2K YR	4.14E-09	5.18E-09	7.55E-09	1.02E-08	4.94E-09	5.65E-09	1.36E-08	2.72E-08	7.06E-06	2.18E-07
5K YR	3.18E-09	3.81E-09	5.88E-09	8.05E-09	3.74E-09	4.26E-09	9.78E-09	1.93E-08	7.06E-06	2.16E-07
10K YR	2.19E-09	2.39E-09	4.14E-09	5.81E-09	2.50E-09	2.82E-09	5.82E-09	1.11E-08	7.06E-06	2.14E-07
20K YR	3.89E-10	5.26E-10	6.69E-10	8.95E-10	4.78E-10	5.51E-10	1.45E-09	2.99E-09	1.99E-07	6.62E-09

POPULATION-SURFACE WATER

TIME	LUNGS	S. WALL	LLI WALL	T. BODY	KIDNEYS	LIVER	RED MAR	BONE	THYROID	ICRP
20YR	0.00E+00	0.00E+00	0.00E+00	0.00E+00	0.00E+00	0.00E+00	0.00E+00	0.00E+00	0.00E+00	0.00E+00
40YR	0.00E+00	0.00E+00	0.00E+00	0.00E+00	0.00E+00	0.00E+00	0.00E+00	0.00E+00	0.00E+00	0.00E+00
60YR	0.00E+00	0.00E+00	0.00E+00	0.00E+00	0.00E+00	0.00E+00	0.00E+00	0.00E+00	0.00E+00	0.00E+00
80YR	0.00E+00	0.00E+00	0.00E+00	0.00E+00	0.00E+00	0.00E+00	0.00E+00	0.00E+00	0.00E+00	0.00E+00
100YR	0.00E+00	0.00E+00	0.00E+00	0.00E+00	0.00E+00	0.00E+00	0.00E+00	0.00E+00	0.00E+00	0.00E+00
120YR	0.00E+00	0.00E+00	0.00E+00	0.00E+00	0.00E+00	0.00E+00	0.00E+00	0.00E+00	0.00E+00	0.00E+00
160YR	0.00E+00	0.00E+00	0.00E+00	0.00E+00	0.00E+00	0.00E+00	0.00E+00	0.00E+00	0.00E+00	0.00E+00
200YR	1.91E-14	2.47E-14	3.27E-14	1.90E-14	1.96E-14	1.90E-14	1.89E-14	1.50E-14	1.90E-14	2.06E-14
400YR	2.27E-12	1.60E-12	4.86E-12	7.08E-12	2.31E-12	2.50E-12	2.45E-12	2.61E-12	1.61E-08	4.83E-10
600YR	4.51E-11	3.18E-11	9.66E-11	1.41E-10	4.59E-11	4.96E-11	4.87E-11	5.20E-11	3.20E-07	9.61E-09
800YR	4.51E-11	3.18E-11	9.66E-11	1.41E-10	4.59E-11	4.96E-11	4.87E-11	5.20E-11	3.20E-07	9.61E-09
1K YR	4.51E-11	3.18E-11	9.65E-11	1.41E-10	4.59E-11	4.96E-11	4.87E-11	5.20E-11	3.20E-07	9.61E-09
2K YR	5.73E-11	4.91E-11	1.17E-10	1.68E-10	6.11E-11	6.73E-11	9.74E-11	1.53E-10	3.20E-07	9.63E-09
5K YR	2.14E-10	2.72E-10	3.86E-10	5.23E-10	2.57E-10	2.94E-10	7.22E-10	1.46E-09	3.20E-07	9.91E-09
10K YR	1.37E-10	1.63E-10	2.53E-10	3.49E-10	1.61E-10	1.83E-10	4.16E-10	8.18E-10	3.19E-07	9.77E-09
20K YR	2.92E-11	4.01E-11	4.99E-11	6.65E-11	3.61E-11	4.17E-11	1.11E-10	2.31E-10	9.02E-09	3.21E-10

WASTE: CON-DIRT WEIGHT: 5.00E+02 MT DENSITY: 1.60E+00 MT/M3

ID= 3 IA= 1 IK1= 0 IK2= 0 PROCESS= 1
IXS= 3 100 0 1
ICS= 0 0 0 100

TRANSPORTATION IMPACTS
TR-MAX = 6.95E-02 MREM/YR
TR-OCC = 4.17E-01 MREM/YEAR
TR-POP = 2.73E-01 PERSON-MREM/YR

INTRUDER IMPACTS:

SCN	LUNGS	S. WALL	LLI WALL	T. BODY	KIDNEYS	LIVER	RED MAR	BONE	THYROID	ICRP
INT-CO	1.90E-02	1.42E-02	1.42E-02	1.45E-02	1.43E-02	1.44E-02	1.53E-02	3.08E-02	1.42E-02	1.58E-02
INT-AG	1.86E-01	1.66E-01	1.65E-01	1.83E-01	1.75E-01	1.69E-01	1.78E-01	2.14E-01	2.03E-01	1.85E-01

EXPOSED WASTE IMPACTS:

SCN	LUNGS	S. WALL	LLI WALL	T. BODY	KIDNEYS	LIVER	RED MAR	BONE	THYROID	ICRP
IN-AIR	3.23E-02	1.45E-05	2.32E-04	2.35E-03	1.36E-03	1.87E-03	8.18E-03	1.22E-01	2.52E-04	1.13E-02
ER-AIR	4.82E-02	2.17E-05	3.46E-04	3.51E-03	2.03E-03	2.80E-03	1.22E-02	1.82E-01	3.76E-04	1.69E-02
IN-WAT	3.68E-06	1.22E-07	2.42E-06	8.59E-06	4.40E-05	1.32E-05	1.14E-05	1.01E-04	3.67E-06	1.48E-05
ER-WAT	2.97E-04	9.88E-06	1.95E-04	6.94E-04	3.56E-03	1.06E-03	9.21E-04	8.13E-03	2.97E-04	1.20E-03

INCINERATION AND OPERATIONAL IMPACTS:

SCN	LUNGS	S. WALL	LLI WALL	T. BODY	KIDNEYS	LIVER	RED MAR	BONE	THYROID	ICRP
IC-POP	0.00E+00	0.00E+00	0.00E+00	0.00E+00	0.00E+00	0.00E+00	0.00E+00	0.00E+00	0.00E+00	0.00E+00
IC-IND	0.00E+00	0.00E+00	0.00E+00	0.00E+00	0.00E+00	0.00E+00	0.00E+00	0.00E+00	0.00E+00	0.00E+00
IC-WOR	0.00E+00	0.00E+00	0.00E+00	0.00E+00	0.00E+00	0.00E+00	0.00E+00	0.00E+00	0.00E+00	0.00E+00
IC-MWR	0.00E+00	0.00E+00	0.00E+00	0.00E+00	0.00E+00	0.00E+00	0.00E+00	0.00E+00	0.00E+00	0.00E+00
OP-POP	2.94E+02	1.32E-01	2.11E+00	2.14E+01	1.24E+01	1.71E+01	7.45E+01	1.11E+03	2.29E+00	1.03E+02
OP-IND	1.83E+00	8.23E-04	1.31E-02	1.33E-01	7.69E-02	1.06E-01	4.63E-01	6.90E+00	1.42E-02	6.39E-01
OP-WOR	8.48E-02	5.48E-02	5.48E-02	5.63E-02	5.51E-02	5.58E-02	6.15E-02	1.59E-01	5.49E-02	6.47E-02
OP-MWR	8.48E-02	5.48E-02	5.48E-02	5.63E-02	5.51E-02	5.58E-02	6.15E-02	1.59E-01	5.49E-02	6.47E-02

LEACHATE ACCUMULATION IMPACTS:

SCN	LUNGS	S. WALL	LLI WALL	T. BODY	KIDNEYS	LIVER	RED MAR	BONE	THYROID	ICRP
LA-OPS	3.50E-05	7.06E-06	2.81E-05	1.45E-04	1.19E-04	1.52E-04	2.03E-04	2.27E-03	3.64E-05	1.44E-04
LA-OVF	2.71E-03	5.47E-04	2.18E-03	1.12E-02	9.20E-03	1.18E-02	1.58E-02	1.76E-01	2.82E-03	1.12E-02
LA-AIR	1.73E-01	4.06E-04	1.45E-03	1.98E-02	5.12E-03	1.87E-02	9.05E-02	1.39E+00	2.20E-03	9.07E-02

GROUND WATER IMPACTS:

INTRUDER-WELL

TIME	LUNGS	S. WALL	LLI WALL	T. BODY	KIDNEYS	LIVER	RED MAR	BONE	THYROID	ICRP
20YR	0.00E+00	0.00E+00	0.00E+00	0.00E+00	0.00E+00	0.00E+00	0.00E+00	0.00E+00	0.00E+00	0.00E+00
40YR	0.00E+00	0.00E+00	0.00E+00	0.00E+00	0.00E+00	0.00E+00	0.00E+00	0.00E+00	0.00E+00	0.00E+00
60YR	0.00E+00	0.00E+00	0.00E+00	0.00E+00	0.00E+00	0.00E+00	0.00E+00	0.00E+00	0.00E+00	0.00E+00
80YR	0.00E+00	0.00E+00	0.00E+00	0.00E+00	0.00E+00	0.00E+00	0.00E+00	0.00E+00	0.00E+00	0.00E+00
100YR	2.74E-06	1.44E-07	1.58E-06	1.52E-05	2.74E-06	2.73E-06	9.86E-06	8.85E-05	2.77E-06	6.24E-06
120YR	6.45E-06	3.39E-07	3.72E-06	3.57E-05	6.45E-06	6.43E-06	2.32E-05	2.09E-04	6.52E-06	1.47E-05
160YR	6.44E-06	3.38E-07	3.71E-06	3.56E-05	6.43E-06	6.42E-06	2.32E-05	2.08E-04	6.51E-06	1.47E-05
200YR	6.33E-06	3.32E-07	3.64E-06	3.50E-05	6.32E-06	6.31E-06	2.28E-05	2.05E-04	6.40E-06	1.44E-05
400YR	1.16E-05	6.09E-07	6.68E-06	6.43E-05	1.16E-05	1.16E-05	4.18E-05	3.75E-04	1.17E-05	2.64E-05
600YR	1.60E-05	8.38E-07	9.19E-06	8.84E-05	1.59E-05	1.59E-05	5.74E-05	5.16E-04	1.61E-05	3.64E-05
800YR	1.95E-05	1.02E-06	1.12E-05	1.08E-04	1.95E-05	1.95E-05	7.02E-05	6.31E-04	1.97E-05	4.44E-05
1K YR	2.24E-05	1.17E-06	1.29E-05	1.24E-04	2.24E-05	2.23E-05	8.05E-05	7.23E-04	2.26E-05	5.09E-05
2K YR	2.89E-05	1.52E-06	1.67E-05	1.60E-04	2.89E-05	2.88E-05	1.04E-04	9.35E-04	2.92E-05	6.59E-05
5K YR	8.40E-06	5.32E-07	9.45E-06	4.92E-05	1.27E-05	4.47E-05	7.78E-05	9.72E-04	8.41E-06	4.92E-05
10K YR	1.81E-06	2.75E-07	1.01E-05	1.52E-05	9.60E-06	6.72E-05	9.71E-05	1.40E-03	1.67E-06	6.14E-05
20K YR	1.40E-06	3.85E-07	1.62E-05	1.60E-05	1.24E-05	9.44E-05	1.50E-04	2.22E-03	1.15E-06	9.50E-05

POPULATION-WELL

TIME	LUNGS	S. WALL	LLI WALL	T. BODY	KIDNEYS	LIVER	RED MAR	BONE	THYROID	ICRP
20YR	0.00E+00	0.00E+00	0.00E+00	0.00E+00	0.00E+00	0.00E+00	0.00E+00	0.00E+00	0.00E+00	0.00E+00
40YR	0.00E+00	0.00E+00	0.00E+00	0.00E+00	0.00E+00	0.00E+00	0.00E+00	0.00E+00	0.00E+00	0.00E+00
60YR	0.00E+00	0.00E+00	0.00E+00	0.00E+00	0.00E+00	0.00E+00	0.00E+00	0.00E+00	0.00E+00	0.00E+00
80YR	0.00E+00	0.00E+00	0.00E+00	0.00E+00	0.00E+00	0.00E+00	0.00E+00	0.00E+00	0.00E+00	0.00E+00
100YR	0.00E+00	0.00E+00	0.00E+00	0.00E+00	0.00E+00	0.00E+00	0.00E+00	0.00E+00	0.00E+00	0.00E+00
120YR	0.00E+00	0.00E+00	0.00E+00	0.00E+00	0.00E+00	0.00E+00	0.00E+00	0.00E+00	0.00E+00	0.00E+00
160YR	0.00E+00	0.00E+00	0.00E+00	0.00E+00	0.00E+00	0.00E+00	0.00E+00	0.00E+00	0.00E+00	0.00E+00
200YR	0.00E+00	0.00E+00	0.00E+00	0.00E+00	0.00E+00	0.00E+00	0.00E+00	0.00E+00	0.00E+00	0.00E+00
400YR	0.00E+00	0.00E+00	0.00E+00	0.00E+00	0.00E+00	0.00E+00	0.00E+00	0.00E+00	0.00E+00	0.00E+00
600YR	0.00E+00	0.00E+00	0.00E+00	0.00E+00	0.00E+00	0.00E+00	0.00E+00	0.00E+00	0.00E+00	0.00E+00
800YR	0.00E+00	0.00E+00	0.00E+00	0.00E+00	0.00E+00	0.00E+00	0.00E+00	0.00E+00	0.00E+00	0.00E+00
1K YR	0.00E+00	0.00E+00	0.00E+00	0.00E+00	0.00E+00	0.00E+00	0.00E+00	0.00E+00	0.00E+00	0.00E+00
2K YR	0.00E+00	0.00E+00	0.00E+00	0.00E+00	0.00E+00	0.00E+00	0.00E+00	0.00E+00	0.00E+00	0.00E+00
5K YR	1.44E-06	7.57E-08	8.31E-07	7.99E-06	1.44E-06	1.44E-06	5.19E-06	4.66E-05	1.46E-06	3.28E-06
10K YR	1.66E-07	8.69E-09	9.53E-08	9.17E-07	1.65E-07	1.65E-07	5.96E-07	5.35E-06	1.67E-07	3.77E-07
20K YR	2.18E-09	1.14E-10	1.26E-09	1.21E-08	2.18E-09	2.17E-09	7.84E-09	7.05E-08	2.20E-09	4.96E-09

POPULATION-SURFACE WATER

TIME	LUNGS	S. WALL	LLI WALL	T. BODY	KIDNEYS	LIVER	RED MAR	BONE	THYROID	ICRP
20YR	0.00E+00	0.00E+00	0.00E+00	0.00E+00	0.00E+00	0.00E+00	0.00E+00	0.00E+00	0.00E+00	0.00E+00
40YR	0.00E+00	0.00E+00	0.00E+00	0.00E+00	0.00E+00	0.00E+00	0.00E+00	0.00E+00	0.00E+00	0.00E+00
60YR	0.00E+00	0.00E+00	0.00E+00	0.00E+00	0.00E+00	0.00E+00	0.00E+00	0.00E+00	0.00E+00	0.00E+00
80YR	0.00E+00	0.00E+00	0.00E+00	0.00E+00	0.00E+00	0.00E+00	0.00E+00	0.00E+00	0.00E+00	0.00E+00
100YR	0.00E+00	0.00E+00	0.00E+00	0.00E+00	0.00E+00	0.00E+00	0.00E+00	0.00E+00	0.00E+00	0.00E+00
120YR	0.00E+00	0.00E+00	0.00E+00	0.00E+00	0.00E+00	0.00E+00	0.00E+00	0.00E+00	0.00E+00	0.00E+00
160YR	0.00E+00	0.00E+00	0.00E+00	0.00E+00	0.00E+00	0.00E+00	0.00E+00	0.00E+00	0.00E+00	0.00E+00
200YR	0.00E+00	0.00E+00	0.00E+00	0.00E+00	0.00E+00	0.00E+00	0.00E+00	0.00E+00	0.00E+00	0.00E+00
400YR	0.00E+00	0.00E+00	0.00E+00	0.00E+00	0.00E+00	0.00E+00	0.00E+00	0.00E+00	0.00E+00	0.00E+00
600YR	0.00E+00	0.00E+00	0.00E+00	0.00E+00	0.00E+00	0.00E+00	0.00E+00	0.00E+00	0.00E+00	0.00E+00
800YR	0.00E+00	0.00E+00	0.00E+00	0.00E+00	0.00E+00	0.00E+00	0.00E+00	0.00E+00	0.00E+00	0.00E+00
1K YR	0.00E+00	0.00E+00	0.00E+00	0.00E+00	0.00E+00	0.00E+00	0.00E+00	0.00E+00	0.00E+00	0.00E+00
2K YR	0.00E+00	0.00E+00	0.00E+00	0.00E+00	0.00E+00	0.00E+00	0.00E+00	0.00E+00	0.00E+00	0.00E+00
5K YR	0.00E+00	0.00E+00	0.00E+00	0.00E+00	0.00E+00	0.00E+00	0.00E+00	0.00E+00	0.00E+00	0.00E+00
10K YR	8.35E-09	3.95E-10	4.80E-09	4.65E-08	8.35E-09	8.33E-09	3.02E-08	2.72E-07	8.43E-09	1.91E-08
20K YR	1.10E-10	5.21E-12	6.31E-11	6.12E-10	1.10E-10	1.10E-10	3.98E-10	3.58E-09	1.11E-10	2.51E-10

CUMULATIVE IMPACTS

INTRUDER IMPACTS:

SCN	LUNGS	S. WALL	LLI WALL	T. BODY	KIDNEYS	LIVER	RED MAR	BONE	THYROID	ICRP
INT-CO	6.66E-02	6.16E-02	6.16E-02	6.19E-02	6.17E-02	6.20E-02	6.28E-02	7.95E-02	6.16E-02	6.33E-02
INT-AG	3.81E-01	3.61E-01	3.60E-01	3.78E-01	3.70E-01	3.65E-01	3.74E-01	4.11E-01	3.98E-01	3.81E-01

EXPOSED WASTE IMPACTS:

SCN	LUNGS	S. WALL	LLI WALL	T. BODY	KIDNEYS	LIVER	RED MAR	BONE	THYROID	ICRP
IN-AIR	6.33E-02	9.98E-04	2.11E-03	6.79E-03	8.10E-03	3.78E-02	2.31E-02	2.83E-01	2.80E-03	2.83E-02
ER-AIR	7.10E-02	2.54E-05	4.25E-04	6.33E-03	6.51E-03	3.76E-02	2.54E-02	3.51E-01	9.96E-04	3.11E-02
IN-WAT	8.95E-06	1.52E-06	4.51E-06	1.13E-05	4.62E-05	1.95E-05	1.59E-05	1.16E-04	6.93E-06	1.97E-05
ER-WAT	2.99E-04	1.01E-05	1.99E-04	7.05E-04	3.58E-03	1.26E-03	9.95E-04	9.05E-03	2.99E-04	1.25E-03

INCINERATION AND OPERATIONAL IMPACTS:

SCN	LUNGS	S. WALL	LLI WALL	T. BODY	KIDNEYS	LIVER	RED MAR	BONE	THYROID	ICRP
IC-POP	7.34E+01	3.39E+00	6.50E+00	1.15E+01	1.67E+01	8.48E+01	3.64E+01	3.79E+02	7.23E+00	4.09E+01
IC-IND	5.59E-04	2.58E-05	4.95E-05	8.74E-05	1.27E-04	6.46E-04	2.77E-04	2.89E-03	5.50E-05	3.11E-04
IC-WOR	5.78E+01	5.77E+01	5.77E+01	5.77E+01	5.77E+01	5.78E+01	5.77E+01	5.80E+01	5.77E+01	5.77E+01
IC-MWR	3.96E-01	3.94E-01	3.94E-01	3.94E-01	3.94E-01	3.96E-01	3.95E-01	4.02E-01	3.94E-01	3.95E-01
OP-POP	6.49E+02	1.20E+01	2.78E+01	7.27E+01	8.98E+01	4.27E+02	2.46E+02	2.95E+03	3.40E+01	2.98E+02
OP-IND	1.96E+00	5.43E-03	2.31E-02	1.53E-01	1.07E-01	2.65E-01	5.30E-01	7.61E+00	2.66E-02	7.15E-01
OP-WOR	3.03E+00	2.97E+00	2.97E+00	2.97E+00	2.97E+00	3.00E+00	2.99E+00	3.21E+00	2.97E+00	2.99E+00
OP-MWR	2.69E-01	2.37E-01	2.37E-01	2.39E-01	2.38E-01	2.40E-01	2.44E-01	3.50E-01	2.37E-01	2.48E-01

LEACHATE ACCUMULATION IMPACTS:

SCN	LUNGS	S. WALL	LLI WALL	T. BODY	KIDNEYS	LIVER	RED MAR	BONE	THYROID	ICRP
LA-OPS	3.53E-05	7.18E-06	2.87E-05	1.45E-04	1.19E-04	1.56E-04	2.05E-04	2.28E-03	3.70E-05	1.45E-04
LA-OVF	2.74E-03	5.57E-04	2.23E-03	1.13E-02	9.25E-03	1.21E-02	1.59E-02	1.77E-01	2.87E-03	1.12E-02
LA-AIR	3.60E-01	8.11E-02	1.19E-01	9.79E-02	9.37E-02	2.66E-01	2.24E-01	2.32E+00	1.98E-01	2.39E-01

GROUND WATER IMPACTS:

INTRUDER-WELL

TIME	LUNGS	S. WALL	LLI WALL	T. BODY	KIDNEYS	LIVER	RED MAR	BONE	THYROID	ICRP
20YR	3.62E-07	4.67E-07	6.20E-07	3.61E-07	3.71E-07	3.59E-07	3.58E-07	2.84E-07	5.54E-06	5.44E-07
40YR	2.38E-07	3.07E-07	5.02E-07	2.47E-07	2.44E-07	2.37E-07	2.63E-07	2.46E-07	1.19E-05	6.16E-07
60YR	1.18E-07	1.52E-07	2.60E-07	1.28E-07	1.21E-07	1.18E-07	1.36E-07	1.36E-07	1.65E-05	6.24E-07
80YR	4.64E-08	5.85E-08	1.16E-07	5.76E-08	4.80E-08	4.73E-08	6.05E-08	6.97E-08	2.33E-05	7.51E-07
100YR	2.76E-06	1.68E-07	1.65E-06	1.52E-05	2.76E-06	2.75E-06	9.89E-06	8.86E-05	3.05E-05	7.10E-06
120YR	6.46E-06	3.54E-07	3.77E-06	3.57E-05	6.46E-06	6.45E-06	2.32E-05	2.09E-04	4.13E-05	1.58E-05
160YR	6.45E-06	3.49E-07	3.74E-06	3.57E-05	6.44E-06	6.43E-06	2.32E-05	2.08E-04	4.52E-05	1.58E-05
200YR	6.34E-06	3.45E-07	3.67E-06	3.51E-05	6.34E-06	6.32E-06	2.28E-05	2.05E-04	4.51E-05	1.56E-05
400YR	1.16E-05	6.31E-07	6.72E-06	6.43E-05	1.16E-05	1.16E-05	4.18E-05	3.75E-04	5.05E-05	2.76E-05
600YR	1.60E-05	8.68E-07	9.24E-06	8.84E-05	1.60E-05	1.59E-05	5.75E-05	5.16E-04	5.49E-05	3.75E-05
800YR	1.95E-05	1.06E-06	1.13E-05	1.08E-04	1.95E-05	1.95E-05	7.03E-05	6.31E-04	5.85E-05	4.56E-05
1K YR	2.24E-05	1.21E-06	1.30E-05	1.24E-04	2.27E-05	2.45E-05	8.14E-05	7.34E-04	6.14E-05	5.27E-05
2K YR	2.90E-05	1.55E-06	1.67E-05	1.60E-04	2.92E-05	3.08E-05	1.05E-04	9.44E-04	6.80E-05	6.76E-05
5K YR	8.43E-06	5.54E-07	9.52E-06	4.94E-05	1.30E-05	4.66E-05	7.86E-05	9.82E-04	4.72E-05	5.10E-05
10K YR	1.85E-06	2.90E-07	1.02E-05	1.54E-05	9.96E-06	6.99E-05	9.82E-05	1.41E-03	4.04E-05	6.34E-05
20K YR	1.42E-06	3.89E-07	1.62E-05	1.62E-05	1.27E-05	9.66E-05	1.51E-04	2.23E-03	2.26E-06	9.57E-05

POPULATION-WELL

TIME	LUNGS	S. WALL	LLI WALL	T. BODY	KIDNEYS	LIVER	RED MAR	BONE	THYROID	ICRP
20YR	0.00E+00	0.00E+00	0.00E+00	0.00E+00	0.00E+00	0.00E+00	0.00E+00	0.00E+00	0.00E+00	0.00E+00
40YR	0.00E+00	0.00E+00	0.00E+00	0.00E+00	0.00E+00	0.00E+00	0.00E+00	0.00E+00	0.00E+00	0.00E+00
60YR	0.00E+00	0.00E+00	0.00E+00	0.00E+00	0.00E+00	0.00E+00	0.00E+00	0.00E+00	0.00E+00	0.00E+00
80YR	0.00E+00	0.00E+00	0.00E+00	0.00E+00	0.00E+00	0.00E+00	0.00E+00	0.00E+00	0.00E+00	0.00E+00
100YR	1.21E-10	1.57E-10	2.03E-10	1.20E-10	1.24E-10	1.20E-10	1.20E-10	9.52E-11	1.20E-10	1.30E-10
120YR	2.65E-10	3.43E-10	4.54E-10	2.63E-10	2.72E-10	2.63E-10	2.62E-10	2.09E-10	2.63E-10	2.85E-10
160YR	7.56E-11	9.77E-11	1.29E-10	7.51E-11	7.74E-11	7.49E-11	7.47E-11	5.93E-11	7.49E-11	8.12E-11
200YR	5.89E-11	4.68E-11	1.23E-10	1.65E-10	6.01E-11	6.40E-11	6.28E-11	6.48E-11	3.56E-07	1.07E-08
400YR	1.00E-09	7.09E-10	2.16E-09	3.11E-09	1.02E-09	1.10E-09	1.08E-09	1.15E-09	7.06E-06	2.12E-07
600YR	1.00E-09	7.09E-10	2.15E-09	3.11E-09	1.02E-09	1.10E-09	1.08E-09	1.15E-09	7.06E-06	2.12E-07
800YR	1.00E-09	7.08E-10	2.15E-09	3.11E-09	1.02E-09	1.10E-09	1.08E-09	1.15E-09	7.06E-06	2.12E-07
1K YR	1.18E-09	9.63E-10	2.46E-09	3.52E-09	1.24E-09	1.35E-09	1.79E-09	2.63E-09	7.06E-06	2.13E-07
2K YR	4.14E-09	5.18E-09	7.55E-09	1.02E-08	4.94E-09	5.65E-09	1.36E-08	2.72E-08	7.06E-06	2.18E-07
5K YR	1.45E-06	7.95E-08	8.37E-07	7.99E-06	1.44E-06	1.44E-06	5.20E-06	4.66E-05	8.52E-06	3.50E-06
10K YR	1.69E-07	1.11E-08	9.95E-08	9.22E-07	1.68E-07	1.68E-07	6.01E-07	5.36E-06	7.22E-06	5.91E-07
20K YR	2.57E-09	6.41E-10	1.92E-09	1.30E-08	2.66E-09	2.72E-09	9.29E-09	7.35E-08	2.01E-07	1.16E-08

POPULATION-SURFACE WATER

TIME	LUNGS	S. WALL	LLI WALL	T. BODY	KIDNEYS	LIVER	RED MAR	BONE	THYROID	ICRP
20YR	0.00E+00	0.00E+00	0.00E+00	0.00E+00	0.00E+00	0.00E+00	0.00E+00	0.00E+00	0.00E+00	0.00E+00
40YR	0.00E+00	0.00E+00	0.00E+00	0.00E+00	0.00E+00	0.00E+00	0.00E+00	0.00E+00	0.00E+00	0.00E+00
60YR	0.00E+00	0.00E+00	0.00E+00	0.00E+00	0.00E+00	0.00E+00	0.00E+00	0.00E+00	0.00E+00	0.00E+00
80YR	0.00E+00	0.00E+00	0.00E+00	0.00E+00	0.00E+00	0.00E+00	0.00E+00	0.00E+00	0.00E+00	0.00E+00
100YR	0.00E+00	0.00E+00	0.00E+00	0.00E+00	0.00E+00	0.00E+00	0.00E+00	0.00E+00	0.00E+00	0.00E+00
120YR	0.00E+00	0.00E+00	0.00E+00	0.00E+00	0.00E+00	0.00E+00	0.00E+00	0.00E+00	0.00E+00	0.00E+00
160YR	0.00E+00	0.00E+00	0.00E+00	0.00E+00	0.00E+00	0.00E+00	0.00E+00	0.00E+00	0.00E+00	0.00E+00
200YR	1.91E-14	2.47E-14	3.27E-14	1.90E-14	1.96E-14	1.90E-14	1.89E-14	1.50E-14	1.90E-14	2.06E-14
400YR	2.27E-12	1.60E-12	4.86E-12	7.08E-12	2.31E-12	2.50E-12	2.45E-12	2.61E-12	1.61E-08	4.83E-10
600YR	4.51E-11	3.18E-11	9.66E-11	1.41E-10	4.59E-11	4.96E-11	4.87E-11	5.20E-11	3.20E-07	9.61E-09
800YR	4.51E-11	3.18E-11	9.66E-11	1.41E-10	4.59E-11	4.96E-11	4.87E-11	5.20E-11	3.20E-07	9.61E-09
1K YR	4.51E-11	3.18E-11	9.65E-11	1.41E-10	4.59E-11	4.96E-11	4.87E-11	5.20E-11	3.20E-07	9.61E-09
2K YR	5.73E-11	4.91E-11	1.17E-10	1.68E-10	6.11E-11	6.73E-11	9.74E-11	1.53E-10	3.20E-07	9.63E-09
5K YR	2.14E-10	2.72E-10	3.85E-10	5.23E-10	2.57E-10	2.94E-10	7.22E-10	1.46E-09	3.20E-07	9.91E-09
10K YR	8.49E-09	5.59E-10	5.05E-09	4.69E-08	8.51E-09	8.51E-09	3.06E-08	2.72E-07	3.28E-07	2.89E-08
20K YR	1.39E-10	4.53E-11	1.13E-10	6.79E-10	1.46E-10	1.51E-10	5.09E-10	3.81E-09	9.14E-09	5.72E-10

000531

```
  2  0  4  1 20 30  1  2
HWF-I            100.        1.0       100.
    3    1    1   50    1   -1   -1    4  100    0    1   50   20   20   10
       25.        25.        25.        25.        25.        25.        25.        25.        25.
SC-46  Y
CS-137 D
  2  0  2  1 20  5  1  2
INC/SLF          100.        1.0       100.
    3    1    0    0    5   -1   -1    4  100    1    4   50   20   20   10
       25.        25.        25.        25.        25.        25.        25.        25.        25.
SC-46  Y
CS-137 D
```

INVIMPS Example 1 Summary Output

HAZARDOUS WASTE I

LIFE= 20 OVFL= 1
REGN= 2 DATA= 0
IPOP= 1 INST= 30

WASTE: HWF-I WEIGHT: 1.00E+02 MT DENSITY: 1.00E+00 MT/M3

ID= 3 IA= 1 IK1= 1 IK2= 50 PROCESS= 1
IXS= 4 100 0 1
ICS= 50 20 20 10

SUMMARY OF MINIMUMS

	SUBSTREAM-1								ALL WASTE	
	INT-CO	INT-AO	IN-WAT	ER-WAT	OP-IND	OP-MWR	LA-OPS	LA-OVF	TR-MAX	RC-MPK
H-3	1.00E+38	5.05E+00	1.00E+38	1.00E+38	1.00E+38	9.04E+02	1.48E+03	8.65E+00	0.00E+00	6.40E+04
C-14	1.00E+38	2.53E+00	4.79E+03	5.35E+00	1.00E+38	2.37E+03	1.46E+03	1.58E+00	0.00E+00	1.00E+38
NA-22	1.13E+02	5.82E+01	1.00E+38	1.00E+38	1.00E+38	1.18E-02	3.34E+05	1.00E+38	1.21E-03	1.91E+01
P-32	1.00E+38	1.00E+38	1.00E+38	1.00E+38	1.00E+38	1.22E+00	4.56E+03	1.00E+38	0.00E+00	6.96E+02
P-33	1.00E+38	1.00E+38	1.00E+38	1.00E+38	1.00E+38	7.70E+00	2.52E+04	1.00E+38	0.00E+00	4.78E+03
S-35	1.00E+38	1.00E+38	1.00E+38	1.00E+38	1.00E+38	6.39E+00	1.43E+05	1.00E+38	0.00E+00	7.10E+03
CL-36	1.12E+03	1.52E-01	9.73E+03	9.68E+00	1.00E+38	7.11E-01	1.50E+02	1.62E-01	0.00E+00	1.67E+03
CA-45	1.00E+38	1.00E+38	1.00E+38	1.00E+38	1.00E+38	3.36E+00	7.65E+04	1.00E+38	1.00E+38	4.62E+03
SC-46	1.00E+38	1.00E+38	1.00E+38	1.00E+38	1.00E+38	1.26E-02	1.00E+38	1.00E+38	1.31E-03	2.08E+01
CR-51	1.00E+38	1.00E+38	1.00E+38	1.00E+38	1.00E+38	8.47E-01	1.00E+38	1.00E+38	8.79E-02	1.27E+01
MN-54	1.00E+38	1.00E+38	1.00E+38	1.00E+38	1.00E+38	3.10E-02	6.40E+04	1.00E+38	3.19E-03	6.20E+01
FE-55	1.00E+38	1.00E+38	1.00E+38	1.00E+38	1.00E+38	4.79E+00	1.52E+05	4.95E+05	0.00E+00	1.00E+38
FE-59	1.00E+38	1.00E+38	1.00E+38	1.00E+38	1.00E+38	2.13E-02	2.37E+04	1.00E+38	2.22E-03	5.24E+01
CO-57	1.00E+38	1.00E+38	1.00E+38	1.00E+38	1.00E+38	2.47E-01	1.39E+05	1.00E+38	2.90E-02	3.45E+02
CO-58	1.00E+38	1.00E+38	1.00E+38	1.00E+38	1.00E+38	3.12E-02	6.86E+04	1.00E+38	3.23E-03	7.58E+01
CO-60	1.81E+00	9.31E-01	5.82E+05	1.00E+38	1.00E+38	9.23E-03	3.51E+03	1.99E+02	1.05E-03	1.66E+01
NI-59	4.27E+04	3.30E+03	6.24E+05	6.25E+02	1.00E+38	2.71E+01	7.40E+04	8.00E+01	0.00E+00	8.91E+05
NI-63	2.08E+04	1.22E+03	2.30E+05	3.39E+05	1.00E+38	1.05E+01	2.34E+04	3.17E+01	0.00E+00	3.59E+05
ZN-65	1.00E+38	1.00E+38	1.00E+38	1.00E+38	1.00E+38	4.41E-02	7.39E+02	1.00E+38	4.65E-03	9.74E+01
SE-79	1.00E+38	1.00E+38	1.00E+38	1.00E+38	1.00E+38	7.88E-02	2.08E+04	1.00E+38	8.17E-03	1.12E+02
RB-86	1.00E+38	1.00E+38	1.00E+38	1.00E+38	1.00E+38	2.65E-01	1.00E+38	1.00E+38	2.78E-02	6.72E+02
SR-85	1.00E+38	1.00E+38	1.00E+38	1.00E+38	1.00E+38	5.07E-02	2.47E+05	1.00E+38	5.25E-03	7.97E+01
SR-89	1.00E+38	1.00E+38	1.00E+38	1.00E+38	1.00E+38	3.88E-01	2.15E+04	1.00E+38	3.06E+02	1.19E+04
SR-90	4.67E+01	3.17E+01	1.46E+04	1.00E+38	1.00E+38	1.41E-02	1.56E+03	3.53E+00	8.47E+04	2.18E+03
ZR-95	1.00E+38	1.00E+38	1.00E+38	1.00E+38	1.00E+38	1.69E-02	5.82E+04	1.00E+38	1.76E-03	2.44E+01
NB-94	5.62E-02	2.90E-02	2.93E+02	3.01E-01	1.00E+38	1.21E-02	4.64E+01	5.02E-02	1.71E-03	2.67E+01
NB-95	1.00E+38	1.00E+38	1.00E+38	1.00E+38	1.00E+38	3.35E-02	2.94E+03	1.00E+38	3.46E-03	7.45E+03
MO-99	1.00E+38	1.00E+38	1.00E+38	1.00E+38	1.00E+38	1.79E-01	3.58E+03	1.00E+38	1.89E-02	1.08E+03
TC-99	3.63E+03	4.66E-01	1.85E+04	1.84E+01	1.00E+38	2.30E+00	2.84E+02	3.07E-01	1.00E+38	1.00E+38
TC-99M	1.00E+38	1.00E+38	1.00E+38	1.00E+38	1.00E+38	2.69E-01	1.23E+05	1.00E+38	2.76E-02	3.34E+02
RU-103	1.00E+38	1.00E+38	1.00E+38	1.00E+38	1.00E+38	5.58E-02	9.48E+02	1.00E+38	5.87E-03	1.60E+02
RU-106	1.00E+38	1.00E+38	1.00E+38	1.00E+38	1.00E+38	2.59E-02	4.42E+01	1.00E+38	1.47E-02	2.24E+02
AG-108	3.92E+00	2.02E+00	7.75E+05	1.00E+38	1.00E+38	1.44E-02	3.60E+05	2.52E+04	1.85E-03	2.84E+01
AG-110	1.00E+38	1.00E+38	1.00E+38	1.00E+38	1.00E+38	9.23E-03	1.00E+38	1.00E+38	9.80E-04	1.53E+01
CD-109	1.00E+38	1.00E+38	1.00E+38	1.00E+38	1.00E+38	2.61E-01	2.49E+03	1.00E+38	7.16E-02	1.52E+03
SN-113	1.00E+38	1.00E+38	1.00E+38	1.00E+38	1.00E+38	1.01E-01	6.31E+05	1.00E+38	1.10E-02	1.63E+02
SN-126	4.53E-02	2.33E-02	5.90E+02	5.90E-01	1.00E+38	1.26E-02	6.43E+03	6.94E+00	1.38E-03	2.10E+01
SB-124	1.00E+38	1.00E+38	1.00E+38	1.00E+38	1.00E+38	1.41E-02	1.00E+38	1.00E+38	1.47E-03	2.31E+01
SB-125	4.64E+02	2.39E+02	1.00E+38	1.00E+38	1.00E+38	6.12E-02	1.00E+38	1.00E+38	6.53E-03	3.89E+03
I-125	1.00E+38	1.00E+38	1.00E+38	1.00E+38	1.00E+38	1.15E-01	1.30E+02	1.00E+38	9.18E-02	9.74E+02
I-129	1.77E+01	1.12E-01	7.01E+01	6.96E-02	1.00E+38	2.40E-02	1.07E+00	1.16E-03	1.01E+00	1.39E+04
I-131	1.00E+38	1.00E+38	1.00E+38	1.00E+38	1.00E+38	4.25E-02	9.28E+01	1.00E+38	7.53E-03	2.08E+03
CS-134	1.44E+03	7.40E+02	1.00E+38	1.00E+38	1.00E+38	1.67E-02	6.20E+04	1.00E+38	1.73E-03	2.96E+01
CS-135	2.20E+04	1.58E+03	1.24E+04	1.23E+01	1.00E+38	1.37E+01	1.38E+05	1.49E+02	0.00E+00	5.68E+03
CS-136	1.00E+38	1.00E+38	1.00E+38	1.00E+38	1.00E+38	1.22E-02	1.00E+38	1.00E+38	1.25E-03	1.94E+01
CS-137	3.15E-01	1.62E-01	3.19E+03	1.00E+38	1.00E+38	4.99E-02	2.14E+04	4.63E+01	4.80E-03	7.18E+01

BA-140	1.00E+38	1.00E+38	1.00E+38	1.00E+38	1.00E+38	1.48E-01	1.00E+38	1.00E+38	1.55E-02	1.55E+03
LA-140	1.00E+38	1.00E+38	1.00E+38	1.00E+38	1.00E+38	1.14E-02	1.00E+38	1.00E+38	1.17E-03	1.85E+01
CE-141	1.00E+38	1.00E+38	1.00E+38	1.00E+38	1.00E+38	3.50E-01	1.00E+38	1.00E+38	4.40E-02	2.49E+03
CE-144	1.00E+38	1.00E+38	1.00E+38	1.00E+38	1.00E+38	3.87E-02	6.50E+05	1.00E+38	6.02E-02	8.85E+02
EU-152	4.43E-01	2.28E-01	7.00E+04	1.00E+38	1.00E+38	2.01E-02	3.45E+05	1.92E+03	2.62E-03	7.14E+02
EU-154	2.83E-01	1.46E-01	2.91E+04	1.00E+38	1.00E+38	1.68E-02	1.84E+05	7.28E+02	2.35E-03	3.67E+01
YB-169	1.00E+38	1.00E+38	1.00E+38	1.00E+38	1.00E+38	1.07E-01	1.00E+38	1.00E+38	1.15E-02	1.35E+02
PB-210	9.25E+00	5.22E+00	3.33E+01	1.00E+38	1.00E+38	6.01E-03	3.99E+01	1.20E-01	1.58E+00	1.65E+02
PO-210	1.00E+38	1.00E+38	1.00E+38	1.00E+38	1.00E+38	2.61E-03	8.97E+01	1.00E+38	1.49E+02	1.21E+01
RN-222	1.80E+04	1.01E+04	6.47E+04	1.00E+38	1.00E+38	1.66E-02	7.49E+02	1.00E+38	1.71E-03	2.08E-01
RA-226	5.52E-02	2.76E-02	1.92E+01	1.83E-02	1.00E+38	2.14E-03	1.45E+01	1.59E-02	5.15E-01	5.27E+01
RA-228	6.12E-01	3.50E-01	9.58E+02	1.00E+38	1.00E+38	6.96E-03	6.64E+01	1.57E+00	3.77E-03	4.56E-01
AC-227	9.72E-02	8.41E-02	7.73E+00	1.00E+38	1.54E+05	2.69E-05	1.69E+00	4.77E-03	9.14E-03	1.02E+00
TH-228	2.69E+03	1.59E+03	1.00E+38	1.00E+38	9.61E+05	1.66E-04	4.30E+02	2.49E+04	1.89E-03	2.32E-01
TH-229	2.30E-02	3.08E-02	2.13E+01	2.32E-02	8.80E+04	1.54E-05	9.10E+00	9.86E-03	1.36E-02	1.53E+00
TH-230	4.71E-02	6.76E-02	4.17E+01	2.52E-02	1.73E+05	3.02E-05	1.82E+01	1.96E-02	1.52E+01	1.37E+01
TH-232	2.05E-02	1.59E-02	2.17E+01	2.11E-02	1.52E+05	2.65E-05	1.62E+01	1.75E-02	0.00E+00	1.60E+01
PA-231	1.51E-02	1.39E-02	1.16E+00	1.02E-03	7.35E+04	1.28E-05	6.54E-01	7.07E-04	7.93E-02	8.69E+00
U-232	5.31E-02	3.54E-02	8.16E+01	9.24E+02	7.21E+05	1.26E-04	1.52E+03	2.19E+00	1.95E+01	1.21E+01
U-233	3.46E-01	5.31E-01	3.18E+03	2.25E-01	1.00E+38	2.22E-04	6.05E+04	6.53E+01	5.15E+01	1.32E+01
U-234	3.53E-01	5.44E-01	4.28E+03	2.17E+00	1.00E+38	2.24E-04	6.01E+04	6.49E+01	3.33E+01	1.55E+03
U-235	2.53E-01	2.29E-01	1.53E+03	4.76E-02	1.00E+38	2.48E-04	5.68E+04	6.14E+01	2.18E-02	5.03E+02
U-236	3.74E-01	5.77E-01	4.53E+03	4.50E+00	1.00E+38	2.38E-04	6.39E+04	6.90E+01	6.21E+01	1.42E+01
U-238	3.76E-01	5.31E-01	4.23E+03	4.19E+00	1.00E+38	2.50E-04	5.96E+04	6.44E+01	2.48E-01	8.42E+02
NP-237	4.09E-02	4.31E-02	7.86E+00	7.80E-03	1.62E+05	2.83E-05	2.72E+01	2.93E-02	1.48E-02	1.49E+00
PU-236	1.29E+00	8.58E-01	1.98E+03	2.24E+04	1.00E+38	2.70E-04	5.09E+04	8.05E+04	1.11E+02	1.11E+01
PU-238	7.37E-02	1.13E-01	4.50E+02	9.22E+02	2.10E+05	3.68E-05	1.44E+03	1.97E+00	1.49E+02	1.17E+01
PU-239	4.56E-02	6.99E-02	2.86E+02	2.92E-01	1.65E+05	2.89E-05	1.08E+03	1.16E+00	0.00E+00	1.24E+01
PU-240	4.58E-02	7.02E-02	2.86E+02	3.15E-01	1.66E+05	2.90E-05	1.08E+03	1.17E+00	1.23E+02	1.24E+01
PU-241	1.81E+00	2.19E+00	2.55E+02	8.59E-01	1.00E+38	1.41E-03	9.11E+04	4.75E+02	1.19E+04	1.00E+38
PU-242	4.52E-02	6.93E-02	2.85E+02	2.84E-01	1.64E+05	2.87E-05	1.09E+03	1.17E+00	1.26E+02	1.31E+01
PU-244	3.92E-02	4.87E-02	2.84E+02	2.57E-01	1.62E+05	2.83E-05	1.07E+03	1.16E+00	1.00E-02	1.25E+00
AM-241	5.05E-02	5.87E-02	5.93E+00	2.55E-02	1.76E+05	3.08E-05	2.46E+00	2.78E-03	2.13E-01	1.52E+01
AM-243	4.21E-02	4.52E-02	5.35E+00	5.77E-03	1.65E+05	2.88E-05	2.29E+00	2.48E-03	1.73E-02	1.48E+00
CM-242	1.43E+01	2.19E+01	8.70E+04	1.79E+05	1.00E+38	6.99E-04	2.46E+04	1.00E+38	3.38E+01	1.05E+01
CM-243	1.54E-01	1.77E-01	2.48E+01	2.22E+02	3.20E+05	5.59E-05	5.94E+01	1.23E-01	2.93E-02	2.77E+00
CM-244	3.75E-01	4.81E-01	5.32E+01	1.18E+02	4.25E+05	7.42E-05	8.72E+01	3.07E-01	2.74E+02	1.10E+01
CM-248	4.42E-02	5.77E-02	7.05E+00	7.01E-03	1.61E+05	2.81E-05	2.69E+01	2.91E-02	0.00E+00	1.26E+01
CF-252	5.40E+02	8.24E+02	1.96E+05	1.25E+03	7.90E+05	1.38E-04	1.78E+02	4.99E+02	1.20E+00	2.98E+02

SUMMARY OF MINIMUMS

	SUBSTREAM-1			SUBSTREAM-2				
	INT-WL	POP-WL	POP-SW	INT-WL	POP-WL	POP-SW	RC-MET	RC-QLS
H-3	6.57E+04	1.00E+38	1.00E+38	0.00E+00	0.00E+00	0.00E+00	0.00E+00	0.00E+00
C-14	4.46E+02	7.62E+03	2.93E+05	0.00E+00	0.00E+00	0.00E+00	0.00E+00	0.00E+00
NA-22	1.00E+38	1.00E+38	1.00E+38	0.00E+00	0.00E+00	0.00E+00	0.00E+00	0.00E+00
P-32	1.00E+38	1.00E+38	1.00E+38	0.00E+00	0.00E+00	0.00E+00	0.00E+00	0.00E+00
P-33	1.00E+38	1.00E+38	1.00E+38	0.00E+00	0.00E+00	0.00E+00	0.00E+00	0.00E+00
S-35	1.00E+38	1.00E+38	1.00E+38	0.00E+00	0.00E+00	0.00E+00	0.00E+00	0.00E+00
CL-36	1.01E+01	1.21E+02	2.71E+03	0.00E+00	0.00E+00	0.00E+00	0.00E+00	0.00E+00
CA-45	1.00E+38	1.00E+38	1.00E+38	0.00E+00	0.00E+00	0.00E+00	0.00E+00	0.00E+00
SC-46	1.00E+38	1.00E+38	1.00E+38	0.00E+00	0.00E+00	0.00E+00	0.00E+00	0.00E+00
CR-51	1.00E+38	1.00E+38	1.00E+38	0.00E+00	0.00E+00	0.00E+00	0.00E+00	0.00E+00
MN-54	1.00E+38	1.00E+38	1.00E+38	0.00E+00	0.00E+00	0.00E+00	0.00E+00	0.00E+00
FE-55	1.00E+38	1.00E+38	1.00E+38	0.00E+00	0.00E+00	0.00E+00	0.00E+00	0.00E+00
FE-59	1.00E+38	1.00E+38	1.00E+38	0.00E+00	0.00E+00	0.00E+00	0.00E+00	0.00E+00
CO-57	1.00E+38	1.00E+38	1.00E+38	0.00E+00	0.00E+00	0.00E+00	0.00E+00	0.00E+00
CO-58	1.00E+38	1.00E+38	1.00E+38	0.00E+00	0.00E+00	0.00E+00	0.00E+00	0.00E+00
CO-60	1.00E+38	1.00E+38	1.00E+38	0.00E+00	0.00E+00	0.00E+00	0.00E+00	0.00E+00
NI-59	9.83E+04	1.00E+38	1.00E+38	0.00E+00	0.00E+00	0.00E+00	0.00E+00	0.00E+00
NI-63	1.00E+38	1.00E+38	1.00E+38	0.00E+00	0.00E+00	0.00E+00	0.00E+00	0.00E+00
ZN-65	1.00E+38	1.00E+38	1.00E+38	0.00E+00	0.00E+00	0.00E+00	0.00E+00	0.00E+00
SE-75	1.00E+38	1.00E+38	1.00E+38	0.00E+00	0.00E+00	0.00E+00	0.00E+00	0.00E+00
RB-86	1.00E+38	1.00E+38	1.00E+38	0.00E+00	0.00E+00	0.00E+00	0.00E+00	0.00E+00
SR-85	1.00E+38	1.00E+38	1.00E+38	0.00E+00	0.00E+00	0.00E+00	0.00E+00	0.00E+00
SR-89	1.00E+38	1.00E+38	1.00E+38	0.00E+00	0.00E+00	0.00E+00	0.00E+00	0.00E+00
SR-90	1.00E+38	1.00E+38	1.00E+38	0.00E+00	0.00E+00	0.00E+00	0.00E+00	0.00E+00
ZR-95	1.00E+38	1.00E+38	1.00E+38	0.00E+00	0.00E+00	0.00E+00	0.00E+00	0.00E+00
NB-94	1.00E+38	1.00E+38	1.00E+38	0.00E+00	0.00E+00	0.00E+00	0.00E+00	0.00E+00
NB-95	1.00E+38	1.00E+38	1.00E+38	0.00E+00	0.00E+00	0.00E+00	0.00E+00	0.00E+00
MO-99	1.00E+38	1.00E+38	1.00E+38	0.00E+00	0.00E+00	0.00E+00	0.00E+00	0.00E+00
TC-99	1.93E+01	2.32E+02	5.19E+03	0.00E+00	0.00E+00	0.00E+00	0.00E+00	0.00E+00
TC-99M	1.00E+38	1.00E+38	1.00E+38	0.00E+00	0.00E+00	0.00E+00	0.00E+00	0.00E+00
RU-103	1.00E+38	1.00E+38	1.00E+38	0.00E+00	0.00E+00	0.00E+00	0.00E+00	0.00E+00
RU-106	1.00E+38	1.00E+38	1.00E+38	0.00E+00	0.00E+00	0.00E+00	0.00E+00	0.00E+00
AG-108	1.00E+38	1.00E+38	1.00E+38	0.00E+00	0.00E+00	0.00E+00	0.00E+00	0.00E+00
AG-110	1.00E+38	1.00E+38	1.00E+38	0.00E+00	0.00E+00	0.00E+00	0.00E+00	0.00E+00
CD-109	1.00E+38	1.00E+38	1.00E+38	0.00E+00	0.00E+00	0.00E+00	0.00E+00	0.00E+00
SN-113	1.00E+38	1.00E+38	1.00E+38	0.00E+00	0.00E+00	0.00E+00	0.00E+00	0.00E+00
SN-126	4.45E+03	1.00E+38	1.00E+38	0.00E+00	0.00E+00	0.00E+00	0.00E+00	0.00E+00
SB-124	1.00E+38	1.00E+38	1.00E+38	0.00E+00	0.00E+00	0.00E+00	0.00E+00	0.00E+00
SB-125	1.00E+38	1.00E+38	1.00E+38	0.00E+00	0.00E+00	0.00E+00	0.00E+00	0.00E+00
I-125	1.00E+38	1.00E+38	1.00E+38	0.00E+00	0.00E+00	0.00E+00	0.00E+00	0.00E+00
I-129	7.31E-02	8.74E-01	1.93E+01	0.00E+00	0.00E+00	0.00E+00	0.00E+00	0.00E+00
I-131	1.00E+38	1.00E+38	1.00E+38	0.00E+00	0.00E+00	0.00E+00	0.00E+00	0.00E+00
CS-134	1.00E+38	1.00E+38	1.00E+38	0.00E+00	0.00E+00	0.00E+00	0.00E+00	0.00E+00
CS-135	9.81E+04	1.00E+38	1.00E+38	0.00E+00	0.00E+00	0.00E+00	0.00E+00	0.00E+00
CS-136	1.00E+38	1.00E+38	1.00E+38	0.00E+00	0.00E+00	0.00E+00	0.00E+00	0.00E+00
CS-137	1.00E+38	1.00E+38	1.00E+38	0.00E+00	0.00E+00	0.00E+00	0.00E+00	0.00E+00
BA-140	1.00E+38	1.00E+38	1.00E+38	0.00E+00	0.00E+00	0.00E+00	0.00E+00	0.00E+00
LA-140	1.00E+38	1.00E+38	1.00E+38	0.00E+00	0.00E+00	0.00E+00	0.00E+00	0.00E+00
CE-141	1.00E+38	1.00E+38	1.00E+38	0.00E+00	0.00E+00	0.00E+00	0.00E+00	0.00E+00
CE-144	1.00E+38	1.00E+38	1.00E+38	0.00E+00	0.00E+00	0.00E+00	0.00E+00	0.00E+00
EU-152	1.00E+38	1.00E+38	1.00E+38	0.00E+00	0.00E+00	0.00E+00	0.00E+00	0.00E+00
EU-154	1.00E+38	1.00E+38	1.00E+38	0.00E+00	0.00E+00	0.00E+00	0.00E+00	0.00E+00
YB-169	1.00E+38	1.00E+38	1.00E+38	0.00E+00	0.00E+00	0.00E+00	0.00E+00	0.00E+00
PB-210	1.00E+38	1.00E+38	1.00E+38	0.00E+00	0.00E+00	0.00E+00	0.00E+00	0.00E+00
PO-210	1.00E+38	1.00E+38	1.00E+38	0.00E+00	0.00E+00	0.00E+00	0.00E+00	0.00E+00
RN-222	1.00E+38	1.00E+38	1.00E+38	0.00E+00	0.00E+00	0.00E+00	0.00E+00	0.00E+00
RA-226	2.63E+01	1.91E+05	1.00E+38	0.00E+00	0.00E+00	0.00E+00	0.00E+00	0.00E+00
RA-228	1.00E+38	1.00E+38	1.00E+38	0.00E+00	0.00E+00	0.00E+00	0.00E+00	0.00E+00

000535

AC-227	1.00E+38	1.00E+38	1.00E+38	0.00E+00	0.00E+00	0.00E+00	0.00E+00	0.00E+00
TH-228	1.00E+38	1.00E+38	1.00E+38	0.00E+00	0.00E+00	0.00E+00	0.00E+00	0.00E+00
TH-229	1.00E+38	1.00E+38	1.00E+38	0.00E+00	0.00E+00	0.00E+00	0.00E+00	0.00E+00
TH-230	1.00E+38	1.00E+38	1.00E+38	0.00E+00	0.00E+00	0.00E+00	0.00E+00	0.00E+00
TH-232	1.00E+38	1.00E+38	1.00E+38	0.00E+00	0.00E+00	0.00E+00	0.00E+00	0.00E+00
PA-231	1.00E+38	1.00E+38	1.00E+38	0.00E+00	0.00E+00	0.00E+00	0.00E+00	0.00E+00
U-232	1.00E+38	1.00E+38	1.00E+38	0.00E+00	0.00E+00	0.00E+00	0.00E+00	0.00E+00
U-233	1.00E+38	1.00E+38	1.00E+38	0.00E+00	0.00E+00	0.00E+00	0.00E+00	0.00E+00
U-234	1.00E+38	1.00E+38	1.00E+38	0.00E+00	0.00E+00	0.00E+00	0.00E+00	0.00E+00
U-235	1.00E+38	1.00E+38	1.00E+38	0.00E+00	0.00E+00	0.00E+00	0.00E+00	0.00E+00
U-236	1.00E+38	1.00E+38	1.00E+38	0.00E+00	0.00E+00	0.00E+00	0.00E+00	0.00E+00
U-238	1.00E+38	1.00E+38	1.00E+38	0.00E+00	0.00E+00	0.00E+00	0.00E+00	0.00E+00
NP-237	2.21E+01	1.00E+38	1.00E+38	0.00E+00	0.00E+00	0.00E+00	0.00E+00	0.00E+00
PU-236	1.00E+38	1.00E+38	1.00E+38	0.00E+00	0.00E+00	0.00E+00	0.00E+00	0.00E+00
PU-238	1.00E+38	1.00E+38	1.00E+38	0.00E+00	0.00E+00	0.00E+00	0.00E+00	0.00E+00
PU-239	1.00E+38	1.00E+38	1.00E+38	0.00E+00	0.00E+00	0.00E+00	0.00E+00	0.00E+00
PU-240	1.00E+38	1.00E+38	1.00E+38	0.00E+00	0.00E+00	0.00E+00	0.00E+00	0.00E+00
PU-241	1.00E+38	1.00E+38	1.00E+38	0.00E+00	0.00E+00	0.00E+00	0.00E+00	0.00E+00
PU-242	1.00E+38	1.00E+38	1.00E+38	0.00E+00	0.00E+00	0.00E+00	0.00E+00	0.00E+00
PU-244	1.00E+38	1.00E+38	1.00E+38	0.00E+00	0.00E+00	0.00E+00	0.00E+00	0.00E+00
AM-241	1.00E+38	1.00E+38	1.00E+38	0.00E+00	0.00E+00	0.00E+00	0.00E+00	0.00E+00
AM-243	1.41E+01	1.00E+38	1.00E+38	0.00E+00	0.00E+00	0.00E+00	0.00E+00	0.00E+00
CM-242	1.00E+38	1.00E+38	1.00E+38	0.00E+00	0.00E+00	0.00E+00	0.00E+00	0.00E+00
CM-243	1.00E+38	1.00E+38	1.00E+38	0.00E+00	0.00E+00	0.00E+00	0.00E+00	0.00E+00
CM-244	1.00E+38	1.00E+38	1.00E+38	0.00E+00	0.00E+00	0.00E+00	0.00E+00	0.00E+00
CM-248	2.36E+01	1.00E+38	1.00E+38	0.00E+00	0.00E+00	0.00E+00	0.00E+00	0.00E+00
CF-252	1.00E+38	1.00E+38	1.00E+38	0.00E+00	0.00E+00	0.00E+00	0.00E+00	0.00E+00

INTRUDER SCENARIO LIMITS FOR ISTR= 1

CONS	H-3	8.23E+06	8.23E+06	7.73E+06	8.23E+06	7.97E+06	8.29E+06	8.29E+06	1.04E+07	8.29E+06	8.16E+06
AGRI	H-3	8.64E+00	6.69E+00	5.05E+00	8.70E+00	8.44E+00	8.72E+00	8.75E+00	1.10E+01	8.72E+00	8.04E+00
CONS	C-14	3.08E+07	2.59E+07	2.63E+07	1.35E+07	2.40E+07	2.14E+07	7.85E+06	3.74E+06	2.93E+07	1.74E+07
AGRI	C-14	2.10E+01	1.47E+01	1.22E+01	9.28E+00	1.68E+01	1.45E+01	5.27E+00	2.53E+00	2.00E+01	1.16E+01
CONS	NA-22	1.13E+02	1.13E+02	1.13E+02	1.13E+02	1.13E+02	1.13E+02	1.13E+02	1.13E+02	1.13E+02	1.13E+02
AGRI	NA-22	5.82E+01	5.82E+01	5.82E+01	5.82E+01	5.82E+01	5.82E+01	5.82E+01	5.82E+01	5.82E+01	5.82E+01
CONS	P-32	0.00E+00	0.00E+00	0.00E+00	0.00E+00	0.00E+00	0.00E+00	0.00E+00	0.00E+00	0.00E+00	0.00E+00
AGRI	P-32	0.00E+00	0.00E+00	0.00E+00	0.00E+00	0.00E+00	0.00E+00	0.00E+00	0.00E+00	0.00E+00	0.00E+00
CONS	P-33	0.00E+00	0.00E+00	0.00E+00	0.00E+00	0.00E+00	0.00E+00	0.00E+00	0.00E+00	0.00E+00	0.00E+00
AGRI	P-33	0.00E+00	0.00E+00	0.00E+00	0.00E+00	0.00E+00	0.00E+00	0.00E+00	0.00E+00	0.00E+00	0.00E+00
CONS	S-35	0.00E+00	0.00E+00	0.00E+00	0.00E+00	0.00E+00	0.00E+00	0.00E+00	0.00E+00	0.00E+00	0.00E+00
AGRI	S-35	0.00E+00	0.00E+00	0.00E+00	0.00E+00	0.00E+00	0.00E+00	0.00E+00	0.00E+00	0.00E+00	0.00E+00
CONS	CL-36	1.12E+03	7.70E+04	1.02E+05	6.07E+03	1.02E+05	1.02E+05	1.02E+05	1.02E+05	1.02E+05	8.65E+03
AGRI	CL-36	2.10E-01	1.52E-01	2.11E-01	2.04E-01	2.11E-01	2.11E-01	2.11E-01	2.11E-01	2.11E-01	2.06E-01
CONS	CA-45	4.54E+23	4.96E+25	3.18E+24	1.70E+24	9.67E+25	9.79E+24	1.51E+24	1.00E+24	9.67E+25	2.46E+24
AGRI	CA-45	4.18E+23	3.86E+23	1.96E+22	4.70E+22	1.03E+24	9.69E+23	1.59E+22	1.05E+22	1.03E+24	6.38E+22
CONS	SC-46	0.00E+00	0.00E+00	0.00E+00	0.00E+00	0.00E+00	0.00E+00	0.00E+00	0.00E+00	0.00E+00	0.00E+00
AGRI	SC-46	0.00E+00	0.00E+00	0.00E+00	0.00E+00	0.00E+00	0.00E+00	0.00E+00	0.00E+00	0.00E+00	0.00E+00
CONS	CR-51	0.00E+00	0.00E+00	0.00E+00	0.00E+00	0.00E+00	0.00E+00	0.00E+00	0.00E+00	0.00E+00	0.00E+00
AGRI	CR-51	0.00E+00	0.00E+00	0.00E+00	0.00E+00	0.00E+00	0.00E+00	0.00E+00	0.00E+00	0.00E+00	0.00E+00
CONS	MN-54	7.93E+09	7.93E+09	7.93E+09	7.93E+09	7.93E+09	7.93E+09	7.93E+09	7.93E+09	7.93E+09	7.93E+09
AGRI	MN-54	4.08E+09	4.08E+09	4.08E+09	4.08E+09	4.08E+09	4.08E+09	4.08E+09	4.08E+09	4.08E+09	4.08E+09
CONS	FE-55	2.27E+07	4.43E+10	1.46E+09	9.32E+08	1.13E+09	5.95E+08	1.13E+09	1.66E+09	1.15E+09	1.44E+08
AGRI	FE-55	2.47E+07	3.09E+09	8.11E+07	1.52E+08	8.78E+07	4.64E+07	8.82E+07	1.29E+08	8.95E+07	5.68E+07
CONS	FE-59	0.00E+00	0.00E+00	0.00E+00	0.00E+00	0.00E+00	0.00E+00	0.00E+00	0.00E+00	0.00E+00	0.00E+00
AGRI	FE-59	0.00E+00	0.00E+00	0.00E+00	0.00E+00	0.00E+00	0.00E+00	0.00E+00	0.00E+00	0.00E+00	0.00E+00
CONS	CO-57	1.54E+12	1.54E+12	1.54E+12	1.54E+12	1.54E+12	1.54E+12	1.54E+12	1.54E+12	1.54E+12	1.54E+12
AGRI	CO-57	7.91E+11	7.92E+11	7.91E+11	7.92E+11	7.92E+11	7.92E+11	7.92E+11	7.92E+11	7.92E+11	7.91E+11
CONS	CO-58	0.00E+00	0.00E+00	0.00E+00	0.00E+00	0.00E+00	0.00E+00	0.00E+00	0.00E+00	0.00E+00	0.00E+00
AGRI	CO-58	0.00E+00	0.00E+00	0.00E+00	0.00E+00	0.00E+00	0.00E+00	0.00E+00	0.00E+00	0.00E+00	0.00E+00
CONS	CO-60	1.81E+00	1.81E+00	1.81E+00	1.81E+00	1.81E+00	1.81E+00	1.81E+00	1.81E+00	1.81E+00	1.81E+00
AGRI	CO-60	9.31E-01	9.31E-01	9.31E-01	9.31E-01	9.31E-01	9.31E-01	9.31E-01	9.31E-01	9.31E-01	9.31E-01
CONS	NI-59	4.27E+04	4.83E+05	2.28E+05	2.05E+05	4.92E+05	4.92E+05	4.83E+05	4.86E+05	4.49E+05	2.05E+05
AGRI	NI-59	1.84E+04	2.13E+04	3.30E+03	1.51E+04	2.44E+04	2.44E+04	2.39E+04	2.41E+04	2.24E+04	1.51E+04
CONS	NI-63	2.08E+04	2.50E+05	9.53E+04	1.03E+05	2.59E+05	2.60E+05	2.60E+05	2.60E+05	2.60E+05	1.03E+05
AGRI	NI-63	9.38E+03	1.04E+04	1.22E+03	6.92E+03	1.28E+04	1.28E+04	1.28E+04	1.28E+04	1.28E+04	6.92E+03
CONS	ZN-65	4.01E+12	4.01E+12	4.01E+12	4.01E+12	4.01E+12	4.01E+12	4.01E+12	4.01E+12	4.01E+12	4.01E+12
AGRI	ZN-65	2.04E+12	2.06E+12	2.05E+12	2.05E+12	2.05E+12	2.05E+12	2.05E+12	1.93E+12	2.06E+12	2.05E+12
CONS	SE-75	6.16E+26	6.16E+26	6.16E+26	6.16E+26	6.16E+26	6.16E+26	6.16E+26	6.16E+26	6.16E+26	6.16E+26
AGRI	SE-75	3.12E+26	3.11E+26	3.11E+26	3.09E+26	2.97E+26	3.01E+26	3.11E+26	3.12E+26	3.14E+26	3.09E+26
CONS	RB-86	0.00E+00	0.00E+00	0.00E+00	0.00E+00	0.00E+00	0.00E+00	0.00E+00	0.00E+00	0.00E+00	0.00E+00
AGRI	RB-86	0.00E+00	0.00E+00	0.00E+00	0.00E+00	0.00E+00	0.00E+00	0.00E+00	0.00E+00	0.00E+00	0.00E+00
CONS	SR-85	0.00E+00	0.00E+00	0.00E+00	0.00E+00	0.00E+00	0.00E+00	0.00E+00	0.00E+00	0.00E+00	0.00E+00
AGRI	SR-85	0.00E+00	0.00E+00	0.00E+00	0.00E+00	0.00E+00	0.00E+00	0.00E+00	0.00E+00	0.00E+00	0.00E+00
CONS	SR-89	0.00E+00	0.00E+00	0.00E+00	0.00E+00	0.00E+00	0.00E+00	0.00E+00	0.00E+00	0.00E+00	0.00E+00
AGRI	SR-89	0.00E+00	0.00E+00	0.00E+00	0.00E+00	0.00E+00	0.00E+00	0.00E+00	0.00E+00	0.00E+00	0.00E+00
CONS	SR-90	4.67E+01	1.39E+04	4.46E+02	2.65E+03	1.07E+05	2.08E+04	3.31E+03	1.73E+03	1.07E+05	2.74E+02
AGRI	SR-90	7.16E+01	3.11E+03	3.17E+01	5.50E+02	9.98E+03	8.27E+03	1.44E+02	7.23E+01	9.98E+03	1.69E+02
CONS	ZR-95	0.00E+00	0.00E+00	0.00E+00	0.00E+00	0.00E+00	0.00E+00	0.00E+00	0.00E+00	0.00E+00	0.00E+00
AGRI	ZR-95	0.00E+00	0.00E+00	0.00E+00	0.00E+00	0.00E+00	0.00E+00	0.00E+00	0.00E+00	0.00E+00	0.00E+00
CONS	NB-94	5.62E-02	5.63E-02	5.63E-02	5.63E-02	5.63E-02	5.63E-02	5.63E-02	5.63E-02	5.63E-02	5.63E-02
AGRI	NB-94	2.90E-02	2.90E-02	2.90E-02	2.90E-02	2.90E-02	2.90E-02	2.90E-02	2.90E-02	2.90E-02	2.90E-02
CONS	NB-95	0.00E+00	0.00E+00	0.00E+00	0.00E+00	0.00E+00	0.00E+00	0.00E+00	0.00E+00	0.00E+00	0.00E+00
AGRI	NB-95	0.00E+00	0.00E+00	0.00E+00	0.00E+00	0.00E+00	0.00E+00	0.00E+00	0.00E+00	0.00E+00	0.00E+00
CONS	MO-99	1.01E+11	9.18E+12	3.17E+12	5.92E+12	1.69E+13	1.24E+13	2.40E+13	1.88E+13	5.57E+11	7.27E+11
AGRI	MO-99	5.76E+08	1.97E+08	5.73E+07	8.56E+08	4.00E+08	2.92E+08	5.69E+08	4.47E+08	1.30E+07	1.80E+08
CONS	TC-99	3.63E+03	3.29E+05	1.14E+05	2.12E+05	6.07E+05	4.45E+05	8.61E+05	6.77E+05	2.00E+04	2.61E+04
AGRI	TC-99	2.07E+01	7.07E+00	2.06E+00	3.07E+01	1.44E+01	1.05E+01	2.04E+01	1.60E+01	4.66E-01	6.45E+00
CONS	TC-99M	1.11E+12	1.01E+14	3.48E+13	6.49E+13	1.86E+14	1.36E+14	2.63E+14	2.07E+14	6.12E+12	7.98E+12
AGRI	TC-99M	6.32E+09	2.16E+09	6.28E+08	9.40E+09	4.39E+09	3.20E+09	6.25E+09	4.91E+09	1.43E+08	1.97E+09
CONS	RU-103	0.00E+00	0.00E+00	0.00E+00	0.00E+00	0.00E+00	0.00E+00	0.00E+00	0.00E+00	0.00E+00	0.00E+00
AGRI	RU-103	0.00E+00	0.00E+00	0.00E+00	0.00E+00	0.00E+00	0.00E+00	0.00E+00	0.00E+00	0.00E+00	0.00E+00

INVIMPS Example 1 Utility Output (Continued)

CONS	RU-106	4.13E+08	4.17E+08	4.17E+08	4.17E+08	4.17E+08	4.17E+08	4.17E+08	4.17E+08	4.17E+08	4.16E+08
AGRI	RU-106	2.13E+08	2.14E+08	1.93E+08	2.14E+08	2.14E+08	2.14E+08	2.14E+08	2.14E+08	2.14E+08	2.12E+08
CONS	AG-108	3.92E+00	3.92E+00	3.92E+00	3.92E+00	3.92E+00	3.92E+00	3.92E+00	3.92E+00	3.92E+00	3.92E+00
AGRI	AG-108	2.02E+00	2.02E+00	2.02E+00	2.02E+00	2.02E+00	2.02E+00	2.02E+00	2.02E+00	2.02E+00	2.02E+00
CONS	AG-110	2.71E+11	2.71E+11	2.71E+11	2.71E+11	2.71E+11	2.71E+11	2.71E+11	2.71E+11	2.71E+11	2.71E+11
AGRI	AG-110	1.39E+11	1.39E+11	1.39E+11	1.39E+11	1.39E+11	1.39E+11	1.39E+11	1.39E+11	1.39E+11	1.39E+11
CONS	CD-109	4.50E+07	4.52E+07	4.52E+07	4.51E+07	4.51E+07	4.52E+07	4.52E+07	4.52E+07	4.52E+07	4.51E+07
AGRI	CD-109	2.31E+07	2.31E+07	2.16E+07	2.15E+07	1.38E+07	2.07E+07	2.31E+07	2.31E+07	2.31E+07	2.19E+07
CONS	SN-113	1.66E+28	1.66E+28	1.66E+28	1.66E+28	1.66E+28	1.66E+28	1.66E+28	1.66E+28	1.66E+28	1.66E+28
AGRI	SN-113	8.56E+27	8.56E+27	8.56E+27	8.56E+27	8.56E+27	8.56E+27	8.56E+27	8.56E+27	8.56E+27	8.56E+27
CONS	SN-126	4.53E-02	4.53E-02	4.53E-02	4.53E-02	4.53E-02	4.53E-02	4.53E-02	4.53E-02	4.53E-02	4.53E-02
AGRI	SN-126	2.33E-02	2.33E-02	2.33E-02	2.33E-02	2.33E-02	2.33E-02	2.33E-02	2.33E-02	2.33E-02	2.33E-02
CONS	SB-124	0.00E+00	0.00E+00	0.00E+00	0.00E+00	0.00E+00	0.00E+00	0.00E+00	0.00E+00	0.00E+00	0.00E+00
AGRI	SB-124	0.00E+00	0.00E+00	0.00E+00	0.00E+00	0.00E+00	0.00E+00	0.00E+00	0.00E+00	0.00E+00	0.00E+00
CONS	SB-125	4.64E+02	4.64E+02	4.64E+02	4.64E+02	4.64E+02	4.64E+02	4.64E+02	4.64E+02	4.64E+02	4.64E+02
AGRI	SB-125	2.39E+02	2.39E+02	2.39E+02	2.39E+02	2.39E+02	2.39E+02	2.39E+02	2.39E+02	2.39E+02	2.39E+02
CONS	I-125	0.00E+00	0.00E+00	0.00E+00	0.00E+00	0.00E+00	0.00E+00	0.00E+00	0.00E+00	0.00E+00	0.00E+00
AGRI	I-125	0.00E+00	0.00E+00	0.00E+00	0.00E+00	0.00E+00	0.00E+00	0.00E+00	0.00E+00	0.00E+00	0.00E+00
CONS	I-129	3.32E+01	3.32E+01	3.32E+01	3.31E+01	3.32E+01	3.32E+01	3.32E+01	3.32E+01	1.77E+01	3.23E+01
AGRI	I-129	1.68E+01	1.71E+01	1.71E+01	1.61E+01	1.68E+01	1.68E+01	1.68E+01	1.68E+01	1.12E-01	3.07E+00
CONS	I-131	0.00E+00	0.00E+00	0.00E+00	0.00E+00	0.00E+00	0.00E+00	0.00E+00	0.00E+00	0.00E+00	0.00E+00
AGRI	I-131	0.00E+00	0.00E+00	0.00E+00	0.00E+00	0.00E+00	0.00E+00	0.00E+00	0.00E+00	0.00E+00	0.00E+00
CONS	CS-134	1.44E+03	1.44E+03	1.44E+03	1.44E+03	1.44E+03	1.44E+03	1.44E+03	1.44E+03	1.44E+03	1.44E+03
AGRI	CS-134	7.40E+02	7.41E+02	7.41E+02	7.41E+02	7.41E+02	7.41E+02	7.41E+02	7.41E+02	7.41E+02	7.40E+02
CONS	CS-135	2.96E+05	4.96E+06	2.23E+06	4.30E+04	2.54E+04	2.54E+04	2.54E+04	2.20E+04	2.53E+04	2.83E+04
AGRI	CS-135	1.91E+03	8.86E+04	3.97E+04	3.10E+03	1.83E+03	1.83E+03	1.83E+03	1.58E+03	1.81E+03	1.82E+03
CONS	CS-136	0.00E+00	0.00E+00	0.00E+00	0.00E+00	0.00E+00	0.00E+00	0.00E+00	0.00E+00	0.00E+00	0.00E+00
AGRI	CS-136	0.00E+00	0.00E+00	0.00E+00	0.00E+00	0.00E+00	0.00E+00	0.00E+00	0.00E+00	0.00E+00	0.00E+00
CONS	CS-137	3.15E-01	3.15E-01	3.15E-01	3.15E-01	3.15E-01	3.15E-01	3.15E-01	3.15E-01	3.15E-01	3.15E-01
AGRI	CS-137	1.62E-01	1.62E-01	1.62E-01	1.62E-01	1.62E-01	1.62E-01	1.62E-01	1.62E-01	1.62E-01	1.62E-01
CONS	BA-140	0.00E+00	0.00E+00	0.00E+00	0.00E+00	0.00E+00	0.00E+00	0.00E+00	0.00E+00	0.00E+00	0.00E+00
AGRI	BA-140	0.00E+00	0.00E+00	0.00E+00	0.00E+00	0.00E+00	0.00E+00	0.00E+00	0.00E+00	0.00E+00	0.00E+00
CONS	LA-140	0.00E+00	0.00E+00	0.00E+00	0.00E+00	0.00E+00	0.00E+00	0.00E+00	0.00E+00	0.00E+00	0.00E+00
AGRI	LA-140	0.00E+00	0.00E+00	0.00E+00	0.00E+00	0.00E+00	0.00E+00	0.00E+00	0.00E+00	0.00E+00	0.00E+00
CONS	CE-141	0.00E+00	0.00E+00	0.00E+00	0.00E+00	0.00E+00	0.00E+00	0.00E+00	0.00E+00	0.00E+00	0.00E+00
AGRI	CE-141	0.00E+00	0.00E+00	0.00E+00	0.00E+00	0.00E+00	0.00E+00	0.00E+00	0.00E+00	0.00E+00	0.00E+00
CONS	CE-144	7.80E+11	8.04E+11	8.03E+11	8.03E+11	8.03E+11	8.03E+11	8.04E+11	8.03E+11	8.04E+11	8.00E+11
AGRI	CE-144	4.10E+11	4.14E+11	4.13E+11	4.14E+11	4.14E+11	4.14E+11	4.14E+11	4.14E+11	4.14E+11	4.13E+11
CONS	EU-152	4.43E-01	4.43E-01	4.43E-01	4.43E-01	4.43E-01	4.43E-01	4.43E-01	4.43E-01	4.43E-01	4.43E-01
AGRI	EU-152	2.28E-01	2.28E-01	2.28E-01	2.28E-01	2.28E-01	2.28E-01	2.28E-01	2.28E-01	2.28E-01	2.28E-01
CONS	EU-154	2.83E-01	2.83E-01	2.83E-01	2.83E-01	2.83E-01	2.83E-01	2.83E-01	2.83E-01	2.83E-01	2.83E-01
AGRI	EU-154	1.46E-01	1.46E-01	1.46E-01	1.46E-01	1.46E-01	1.46E-01	1.46E-01	1.46E-01	1.46E-01	1.46E-01
CONS	YB-169	0.00E+00	0.00E+00	0.00E+00	0.00E+00	0.00E+00	0.00E+00	0.00E+00	0.00E+00	0.00E+00	0.00E+00
AGRI	YB-169	0.00E+00	0.00E+00	0.00E+00	0.00E+00	0.00E+00	0.00E+00	0.00E+00	0.00E+00	0.00E+00	0.00E+00
CONS	PB-210	9.29E+00	1.42E+02	1.37E+02	6.17E+01	2.47E+01	5.62E+01	7.80E+01	2.18E+01	1.01E+02	3.45E+01
AGRI	PB-210	1.11E+01	7.29E+01	6.12E+01	1.96E+01	6.11E+00	1.61E+01	2.52E+01	5.22E+00	3.77E+01	1.54E+01
CONS	PO-210	2.86E+24	3.23E+27	1.04E+27	9.85E+25	9.39E+24	5.19E+25	1.52E+26	3.23E+26	1.57E+26	1.50E+25
AGRI	PO-210	3.97E+24	1.25E+27	1.04E+26	3.77E+25	1.95E+24	1.12E+25	3.28E+25	7.22E+25	3.41E+25	7.09E+24
CONS	RN-222	1.80E+04	2.76E+05	2.66E+05	1.20E+05	4.79E+04	1.09E+05	1.51E+05	4.23E+04	1.97E+05	6.70E+04
AGRI	RN-222	2.15E+04	1.42E+05	1.19E+05	3.79E+04	1.19E+04	3.13E+04	4.90E+04	1.01E+04	7.32E+04	2.99E+04
CONS	RA-226	5.52E-02	5.67E-02	5.67E-02	5.65E-02	5.65E-02	5.66E-02	5.66E-02	5.61E-02	5.66E-02	5.64E-02
AGRI	RA-226	2.89E-02	2.92E-02	2.92E-02	2.89E-02	2.89E-02	2.91E-02	2.90E-02	2.76E-02	2.91E-02	2.90E-02
CONS	RA-228	6.12E-01	7.18E-01	7.18E-01	7.15E-01	7.18E-01	7.18E-01	7.12E-01	6.54E-01	7.18E-01	6.96E-01
AGRI	RA-228	3.50E-01	3.70E-01	3.70E-01	3.69E-01	3.70E-01	3.70E-01	3.68E-01	3.52E-01	3.70E-01	3.66E-01
CONS	AC-227	2.99E-01	7.86E-01	7.84E-01	6.78E-01	6.87E-01	3.74E-01	4.59E-01	9.72E-02	7.78E-01	4.31E-01
AGRI	AC-227	2.62E-01	4.05E-01	4.04E-01	3.78E-01	3.76E-01	2.53E-01	2.93E-01	8.41E-02	4.03E-01	2.99E-01
CONS	TH-228	2.69E+03	3.32E+03	3.32E+03	3.30E+03	3.32E+03	3.32E+03	3.28E+03	2.94E+03	3.32E+03	3.18E+03
AGRI	TH-228	1.59E+03	1.71E+03	1.71E+03	1.71E+03	1.71E+03	1.71E+03	1.70E+03	1.63E+03	1.71E+03	1.69E+03
CONS	TH-229	1.15E-01	4.46E-01	4.45E-01	3.57E-01	4.42E-01	4.31E-01	1.75E-01	2.30E-02	4.42E-01	1.79E-01
AGRI	TH-229	1.17E-01	2.30E-01	2.29E-01	2.12E-01	2.29E-01	2.27E-01	1.49E-01	3.08E-02	2.29E-01	1.52E-01
CONS	TH-230	3.32E-01	4.30E+00	4.29E+00	2.31E+00	4.19E+00	3.82E+00	6.35E-01	4.71E-02	4.20E+00	6.25E-01
AGRI	TH-230	4.43E-01	2.21E+00	2.17E+00	1.70E+00	2.18E+00	2.12E+00	7.31E-01	6.76E-02	2.19E+00	7.31E-01
CONS	TH-232	3.48E-02	4.38E-02	4.38E-02	4.33E-02	4.38E-02	4.38E-02	4.09E-02	2.05E-02	4.38E-02	4.02E-02

AGRI	TH-232	2.07E-02	2.26E-02	2.26E-02	2.24E-02	2.26E-02	2.25E-02	2.20E-02	1.59E-02	2.26E-02	2.19E-02
CONS	PA-231	1.12E-01	4.09E-01	4.08E-01	2.86E-01	2.66E-01	7.95E-02	1.22E-01	1.51E-02	3.96E-01	1.31E-01
AGRI	PA-231	1.11E-01	2.11E-01	2.10E-01	1.74E-01	1.64E-01	6.50E-02	9.33E-02	1.39E-02	2.07E-01	1.05E-01
CONS	U-232	5.31E-02	8.05E-02	8.04E-02	7.87E-02	8.03E-02	8.03E-02	7.74E-02	5.61E-02	8.05E-02	7.02E-02
AGRI	U-232	3.54E-02	4.15E-02	4.14E-02	4.11E-02	4.14E-02	4.14E-02	4.09E-02	3.58E-02	4.15E-02	3.95E-02
CONS	U-233	3.46E-01	1.44E+02	1.33E+02	1.02E+01	6.25E+01	1.38E+02	5.54E+01	7.01E+00	1.41E+02	1.65E+00
AGRI	U-233	5.31E-01	7.34E+01	5.17E+01	1.36E+01	4.67E+01	7.30E+01	4.69E+01	9.11E+00	7.35E+01	2.47E+00
CONS	U-234	3.53E-01	1.04E+03	6.55E+02	1.17E+01	1.01E+02	9.63E+02	3.90E+02	4.02E+01	9.69E+02	1.70E+00
AGRI	U-234	5.44E-01	5.06E+02	1.31E+02	1.74E+01	1.03E+02	5.22E+02	3.15E+02	4.59E+01	5.23E+02	2.61E+00
CONS	U-235	2.53E-01	7.16E-01	7.15E-01	6.77E-01	7.11E-01	7.13E-01	7.13E-01	6.90E-01	7.15E-01	5.19E-01
AGRI	U-235	2.29E-01	3.68E-01	3.68E-01	3.61E-01	3.67E-01	3.68E-01	3.68E-01	3.61E-01	3.68E-01	3.27E-01
CONS	U-236	3.74E-01	1.96E+03	9.82E+02	1.18E+01	1.12E+02	1.75E+03	6.47E+02	5.75E+01	1.75E+03	1.82E+00
AGRI	U-236	5.77E-01	9.22E+02	1.56E+02	1.77E+01	1.20E+02	9.77E+02	5.32E+02	6.31E+01	9.78E+02	2.79E+00
CONS	U-238	3.76E-01	8.14E+00	8.05E+00	4.95E+00	7.65E+00	8.14E+00	8.07E+00	7.24E+00	8.14E+00	1.55E+00
AGRI	U-238	5.31E-01	4.19E+00	4.09E+00	3.44E+00	4.07E+00	4.19E+00	4.18E+00	3.97E+00	4.19E+00	1.73E+00
CONS	NP-237	1.97E-01	4.86E-01	4.85E-01	4.15E-01	3.85E-01	1.61E-01	2.74E-01	4.09E-02	4.79E-01	2.57E-01
AGRI	NP-237	1.68E-01	2.50E-01	2.49E-01	2.34E-01	2.24E-01	1.32E-01	1.87E-01	4.31E-02	2.48E-01	1.84E-01
CONS	PU-236	1.29E+00	1.96E+00	1.95E+00	1.91E+00	1.95E+00	1.95E+00	1.88E+00	1.36E+00	1.95E+00	1.70E+00
AGRI	PU-236	8.58E-01	1.01E+00	1.01E+00	1.00E+00	1.01E+00	1.01E+00	9.93E-01	8.69E-01	1.01E+00	9.60E-01
CONS	PU-238	3.96E-01	5.80E+03	1.52E+03	4.01E+00	2.68E+00	3.44E-01	9.23E-01	7.37E-02	4.69E+01	7.84E-01
AGRI	PU-238	6.11E-01	2.33E+03	1.81E+02	6.15E+00	4.10E+00	5.28E-01	1.41E+00	1.13E-01	7.08E+01	1.20E+00
CONS	PU-239	3.27E-01	6.95E+04	1.72E+03	2.83E+00	1.84E+00	2.38E-01	6.25E-01	4.56E-02	3.27E+01	5.46E-01
AGRI	PU-239	5.04E-01	7.13E+03	1.59E+02	4.34E+00	2.82E+00	3.65E-01	9.59E-01	6.99E-02	5.01E+01	8.39E-01
CONS	PU-240	3.28E-01	3.84E+03	1.21E+03	2.83E+00	1.84E+00	2.39E-01	6.29E-01	4.58E-02	3.25E+01	5.49E-01
AGRI	PU-240	5.06E-01	1.62E+03	1.48E+02	4.34E+00	2.82E+00	3.66E-01	9.64E-01	7.02E-02	4.90E+01	8.43E-01
CONS	PU-241	1.31E+01	3.15E+02	3.13E+02	7.96E+01	5.56E+01	8.46E+00	2.12E+01	1.81E+00	2.47E+02	2.01E+01
AGRI	PU-241	1.86E+01	1.62E+02	1.56E+02	7.45E+01	5.45E+01	9.94E+00	2.37E+01	2.19E+00	1.45E+02	2.39E+01
CONS	PU-242	3.44E-01	3.91E+03	1.22E+03	3.00E+00	1.93E+00	2.50E-01	6.60E-01	4.52E-02	3.35E+01	5.64E-01
AGRI	PU-242	5.31E-01	1.66E+03	1.54E+02	4.61E+00	2.96E+00	3.84E-01	1.01E+00	6.93E-02	5.06E+01	8.65E-01
CONS	PU-244	1.68E-01	3.30E-01	3.29E-01	2.97E-01	2.82E-01	1.43E-01	2.24E-01	3.92E-02	3.27E-01	2.08E-01
AGRI	PU-244	1.29E-01	1.70E-01	1.69E-01	1.64E-01	1.61E-01	1.18E-01	1.46E-01	4.87E-02	1.69E-01	1.42E-01
CONS	AM-241	3.09E-01	7.30E+00	7.27E+00	2.06E+00	1.49E+00	2.33E-01	5.84E-01	5.05E-02	5.98E+00	5.28E-01
AGRI	AM-241	4.38E-01	3.76E+00	3.61E+00	1.85E+00	1.38E+00	2.62E-01	6.22E-01	5.87E-02	3.43E+00	6.12E-01
CONS	AM-243	2.04E-01	5.69E-01	5.69E-01	4.72E-01	4.31E-01	1.64E-01	2.94E-01	4.21E-02	5.59E-01	2.76E-01
AGRI	AM-243	1.83E-01	2.93E-01	2.92E-01	2.70E-01	2.57E-01	1.41E-01	2.08E-01	4.52E-02	2.91E-01	2.06E-01
CONS	CM-242	7.67E+01	1.12E+06	2.94E+05	7.76E+02	5.18E+02	6.66E+01	1.79E+02	1.43E+01	9.07E+03	1.52E+02
AGRI	CM-242	1.18E+02	4.51E+05	3.50E+04	1.19E+03	7.93E+02	1.02E+02	2.74E+02	2.19E+01	1.37E+04	2.33E+02
CONS	CM-243	4.40E-01	1.85E+00	1.84E+00	1.48E+00	1.37E+00	5.02E-01	9.38E-01	1.54E-01	1.81E+00	8.19E-01
AGRI	CM-243	4.60E-01	9.50E-01	9.47E-01	8.70E-01	8.35E-01	4.58E-01	6.86E-01	1.77E-01	9.43E-01	6.50E-01
CONS	CM-244	1.01E+00	2.53E+04	4.06E+03	1.57E+01	1.17E+01	1.53E+00	4.32E+00	3.75E-01	2.24E+02	2.98E+00
AGRI	CM-244	1.56E+00	8.58E+03	4.43E+02	2.14E+01	1.50E+01	1.96E+00	5.53E+00	4.81E-01	2.83E+02	4.18E+00
CONS	CM-248	8.53E-02	5.57E+01	1.05E+02	7.28E-01	4.72E-01	6.13E-02	6.38E-01	4.42E-02	7.89E+00	2.16E-01
AGRI	CM-248	1.31E-01	7.14E+01	2.53E+01	9.88E-01	6.18E-01	8.00E-02	8.32E-01	5.77E-02	1.03E+01	3.06E-01
CONS	CF-252	5.40E+02	9.46E+04	9.46E+04	1.66E+04	2.17E+04	3.41E+03	2.03E+04	2.13E+03	8.39E+04	3.15E+03
AGRI	CF-252	8.24E+02	5.03E+04	3.57E+04	1.79E+04	1.94E+04	3.68E+03	1.82E+04	2.32E+03	4.79E+04	4.36E+03

EXPOSED WASTE LIMITS FOR ISTR= 1

INT	H-3	5.52E+06	4.27E+06	3.23E+06	5.56E+06	5.39E+06	5.57E+06	5.59E+06	7.04E+06	5.57E+06	5.14E+06
ERO	H-3	3.15E+27	2.44E+27	1.84E+27	3.17E+27	3.08E+27	3.18E+27	3.19E+27	4.01E+27	3.18E+27	2.93E+27
INT	C-14	3.98E+04	2.79E+04	2.32E+04	1.76E+04	3.19E+04	2.75E+04	1.00E+04	4.79E+03	3.80E+04	2.19E+04
ERO	C-14	4.45E+01	3.12E+01	2.59E+01	1.97E+01	3.56E+01	3.07E+01	1.12E+01	5.35E+00	4.25E+01	2.45E+01
INT	NA-22	1.86E+07	3.99E+07	3.26E+07	3.14E+07	2.96E+07	3.15E+07	2.36E+07	1.88E+07	3.30E+07	2.45E+07
ERO	NA-22	0.00E+00	0.00E+00	0.00E+00	0.00E+00	0.00E+00	0.00E+00	0.00E+00	0.00E+00	0.00E+00	0.00E+00
INT	P-32	0.00E+00	0.00E+00	0.00E+00	0.00E+00	0.00E+00	0.00E+00	0.00E+00	0.00E+00	0.00E+00	0.00E+00
ERO	P-32	0.00E+00	0.00E+00	0.00E+00	0.00E+00	0.00E+00	0.00E+00	0.00E+00	0.00E+00	0.00E+00	0.00E+00
INT	P-33	0.00E+00	0.00E+00	0.00E+00	0.00E+00	0.00E+00	0.00E+00	0.00E+00	0.00E+00	0.00E+00	0.00E+00
ERO	P-33	0.00E+00	0.00E+00	0.00E+00	0.00E+00	0.00E+00	0.00E+00	0.00E+00	0.00E+00	0.00E+00	0.00E+00
INT	S-35	0.00E+00	0.00E+00	0.00E+00	0.00E+00	0.00E+00	0.00E+00	0.00E+00	0.00E+00	0.00E+00	0.00E+00
ERO	S-35	0.00E+00	0.00E+00	0.00E+00	0.00E+00	0.00E+00	0.00E+00	0.00E+00	0.00E+00	0.00E+00	0.00E+00
INT	CL-36	1.35E+04	9.73E+03	1.35E+04	1.31E+04	1.35E+04	1.35E+04	1.35E+04	1.35E+04	1.35E+04	1.32E+04
ERO	CL-36	1.34E+01	9.68E+00	1.34E+01	1.30E+01	1.34E+01	1.34E+01	1.34E+01	1.34E+01	1.34E+01	1.31E+01
INT	CA-45	2.30E+26	8.62E+25	4.38E+24	1.06E+25	2.30E+26	2.30E+26	3.56E+24	2.35E+24	2.30E+26	1.44E+25
ERO	CA-45	0.00E+00	0.00E+00	0.00E+00	0.00E+00	0.00E+00	0.00E+00	0.00E+00	0.00E+00	0.00E+00	0.00E+00
INT	SC-46	0.00E+00	0.00E+00	0.00E+00	0.00E+00	0.00E+00	0.00E+00	0.00E+00	0.00E+00	0.00E+00	0.00E+00
ERO	SC-46	0.00E+00	0.00E+00	0.00E+00	0.00E+00	0.00E+00	0.00E+00	0.00E+00	0.00E+00	0.00E+00	0.00E+00
INT	CR-51	0.00E+00	0.00E+00	0.00E+00	0.00E+00	0.00E+00	0.00E+00	0.00E+00	0.00E+00	0.00E+00	0.00E+00
ERO	CR-51	0.00E+00	0.00E+00	0.00E+00	0.00E+00	0.00E+00	0.00E+00	0.00E+00	0.00E+00	0.00E+00	0.00E+00
INT	MN-54	9.80E+14	1.51E+15	3.06E+14	1.68E+15	1.48E+15	6.43E+14	1.25E+15	1.54E+15	3.25E+15	7.68E+14
ERO	MN-54	0.00E+00	0.00E+00	0.00E+00	0.00E+00	0.00E+00	0.00E+00	0.00E+00	0.00E+00	0.00E+00	0.00E+00
INT	FE-55	1.41E+09	5.42E+10	1.41E+09	2.85E+09	1.55E+09	8.18E+08	1.56E+09	2.28E+09	1.58E+09	1.28E+09
ERO	FE-55	0.00E+00	0.00E+00	0.00E+00	0.00E+00	0.00E+00	0.00E+00	0.00E+00	0.00E+00	0.00E+00	0.00E+00
INT	FE-59	0.00E+00	0.00E+00	0.00E+00	0.00E+00	0.00E+00	0.00E+00	0.00E+00	0.00E+00	0.00E+00	0.00E+00
ERO	FE-59	0.00E+00	0.00E+00	0.00E+00	0.00E+00	0.00E+00	0.00E+00	0.00E+00	0.00E+00	0.00E+00	0.00E+00
INT	CO-57	9.62E+17	1.05E+18	1.77E+17	1.01E+18	1.13E+18	1.08E+18	9.88E+17	7.47E+17	9.01E+17	6.09E+17
ERO	CO-57	0.00E+00	0.00E+00	0.00E+00	0.00E+00	0.00E+00	0.00E+00	0.00E+00	0.00E+00	0.00E+00	0.00E+00
INT	CO-58	0.00E+00	0.00E+00	0.00E+00	0.00E+00	0.00E+00	0.00E+00	0.00E+00	0.00E+00	0.00E+00	0.00E+00
ERO	CO-58	0.00E+00	0.00E+00	0.00E+00	0.00E+00	0.00E+00	0.00E+00	0.00E+00	0.00E+00	0.00E+00	0.00E+00
INT	CO-60	1.48E+06	1.87E+06	5.82E+05	1.80E+06	1.74E+06	1.68E+06	1.75E+06	1.83E+06	2.04E+06	1.26E+06
ERO	CO-60	0.00E+00	0.00E+00	0.00E+00	0.00E+00	0.00E+00	0.00E+00	0.00E+00	0.00E+00	0.00E+00	0.00E+00
INT	NI-59	4.79E+06	4.10E+06	6.24E+05	2.94E+06	4.72E+06	4.72E+06	4.61E+06	4.64E+06	4.32E+06	2.94E+06
ERO	NI-59	4.79E+03	4.10E+03	6.25E+02	2.95E+03	4.73E+03	4.73E+03	4.62E+03	4.65E+03	4.33E+03	2.95E+03
INT	NI-63	2.48E+06	2.01E+06	2.30E+05	1.35E+06	2.48E+06	2.48E+06	2.48E+06	2.48E+06	2.48E+06	1.35E+06
ERO	NI-63	3.66E+06	2.96E+06	3.39E+05	2.00E+06	3.66E+06	3.66E+06	3.66E+06	3.66E+06	3.66E+06	2.00E+06
INT	ZN-65	7.00E+16	1.86E+17	1.30E+17	1.55E+17	1.17E+17	1.18E+17	1.14E+17	1.27E+16	1.73E+17	1.02E+17
ERO	ZN-65	0.00E+00	0.00E+00	0.00E+00	0.00E+00	0.00E+00	0.00E+00	0.00E+00	0.00E+00	0.00E+00	0.00E+00
INT	SE-75	7.30E+31	5.76E+31	6.33E+31	4.58E+31	1.86E+31	2.31E+31	5.99E+31	6.85E+31	9.70E+31	4.85E+31
ERO	SE-75	0.00E+00	0.00E+00	0.00E+00	0.00E+00	0.00E+00	0.00E+00	0.00E+00	0.00E+00	0.00E+00	0.00E+00
INT	RB-86	0.00E+00	0.00E+00	0.00E+00	0.00E+00	0.00E+00	0.00E+00	0.00E+00	0.00E+00	0.00E+00	0.00E+00
ERO	RB-86	0.00E+00	0.00E+00	0.00E+00	0.00E+00	0.00E+00	0.00E+00	0.00E+00	0.00E+00	0.00E+00	0.00E+00
INT	SR-85	0.00E+00	0.00E+00	0.00E+00	0.00E+00	0.00E+00	0.00E+00	0.00E+00	0.00E+00	0.00E+00	0.00E+00
ERO	SR-85	0.00E+00	0.00E+00	0.00E+00	0.00E+00	0.00E+00	0.00E+00	0.00E+00	0.00E+00	0.00E+00	0.00E+00
INT	SR-89	0.00E+00	0.00E+00	0.00E+00	0.00E+00	0.00E+00	0.00E+00	0.00E+00	0.00E+00	0.00E+00	0.00E+00
ERO	SR-89	0.00E+00	0.00E+00	0.00E+00	0.00E+00	0.00E+00	0.00E+00	0.00E+00	0.00E+00	0.00E+00	0.00E+00
INT	SR-90	4.15E+06	1.60E+06	1.46E+04	2.80E+05	4.68E+06	4.91E+06	6.53E+04	3.26E+04	4.68E+06	1.24E+05
ERO	SR-90	1.05E+14	4.04E+13	3.69E+11	7.06E+12	1.18E+14	1.24E+14	1.65E+12	8.24E+11	1.18E+14	3.13E+12
INT	ZR-95	0.00E+00	0.00E+00	0.00E+00	0.00E+00	0.00E+00	0.00E+00	0.00E+00	0.00E+00	0.00E+00	0.00E+00
ERO	ZR-95	0.00E+00	0.00E+00	0.00E+00	0.00E+00	0.00E+00	0.00E+00	0.00E+00	0.00E+00	0.00E+00	0.00E+00
INT	NB-94	1.65E+04	4.50E+03	2.93E+02	1.85E+03	4.94E+03	1.12E+04	4.66E+03	4.48E+03	1.96E+04	1.85E+03
ERO	NB-94	1.69E+01	4.62E+00	3.01E-01	1.90E+00	5.07E+00	1.15E+01	4.78E+00	4.60E+00	2.01E+01	1.90E+00
INT	NB-95	0.00E+00	0.00E+00	0.00E+00	0.00E+00	0.00E+00	0.00E+00	0.00E+00	0.00E+00	0.00E+00	0.00E+00
ERO	NB-95	0.00E+00	0.00E+00	0.00E+00	0.00E+00	0.00E+00	0.00E+00	0.00E+00	0.00E+00	0.00E+00	0.00E+00
INT	MO-99	2.29E+13	7.82E+12	2.27E+12	3.40E+13	1.59E+13	1.16E+13	2.26E+13	1.77E+13	5.16E+11	7.13E+12
ERO	MO-99	2.28E+10	7.79E+09	2.26E+09	3.39E+10	1.58E+10	1.15E+10	2.25E+10	1.77E+10	5.14E+08	7.10E+09
INT	TC-99	8.23E+05	2.81E+05	8.16E+04	1.22E+06	5.70E+05	4.16E+05	8.11E+05	6.37E+05	1.85E+04	2.56E+05
ERO	TC-99	8.20E+02	2.80E+02	8.13E+01	1.22E+03	5.68E+02	4.14E+02	8.08E+02	6.34E+02	1.84E+01	2.55E+02
INT	TC-99M	2.52E+14	8.58E+13	2.49E+13	3.73E+14	1.74E+14	1.27E+14	2.48E+14	1.95E+14	5.66E+12	7.83E+13
ERO	TC-99M	2.51E+11	8.55E+10	2.49E+10	3.72E+11	1.74E+11	1.27E+11	2.47E+11	1.94E+11	5.64E+09	7.80E+10
INT	RU-103	0.00E+00	0.00E+00	0.00E+00	0.00E+00	0.00E+00	0.00E+00	0.00E+00	0.00E+00	0.00E+00	0.00E+00

ERO	RU-103	0.00E+00	0.00E+00	0.00E+00	0.00E+00	0.00E+00	0.00E+00	0.00E+00	0.00E+00	0.00E+00	0.00E+00	0.00E+00
INT	RU-106	7.58E+12	1.00E+13	2.52E+11	1.08E+13	7.82E+12	7.80E+12	7.76E+12	6.74E+12	7.96E+12	2.26E+12	
ERO	RU-106	0.00E+00	0.00E+00	0.00E+00	0.00E+00	0.00E+00	0.00E+00	0.00E+00	0.00E+00	0.00E+00	0.00E+00	
INT	AG-108	3.22E+06	2.81E+06	7.79E+05	1.87E+06	2.70E+06	8.42E+05	3.09E+06	3.23E+06	3.31E+06	1.87E+06	
ERO	AG-108	0.00E+00	0.00E+00	0.00E+00	0.00E+00	0.00E+00	0.00E+00	0.00E+00	0.00E+00	0.00E+00	0.00E+00	
INT	AG-110	2.66E+17	2.34E+17	6.96E+16	1.61E+17	2.25E+17	8.28E+16	2.56E+17	2.73E+17	2.66E+17	1.61E+17	
ERO	AG-110	0.00E+00	0.00E+00	0.00E+00	0.00E+00	0.00E+00	0.00E+00	0.00E+00	0.00E+00	0.00E+00	0.00E+00	
INT	CD-109	6.00E+12	4.67E+12	4.15E+11	3.89E+11	4.70E+10	2.60E+11	5.16E+12	5.77E+12	6.80E+12	5.40E+11	
ERO	CD-109	0.00E+00	0.00E+00	0.00E+00	0.00E+00	0.00E+00	0.00E+00	0.00E+00	0.00E+00	0.00E+00	0.00E+00	
INT	SN-113	1.36E+34	6.00E+33	1.51E+32	1.33E+33	1.03E+34	1.19E+34	4.96E+33	3.85E+33	1.18E+34	1.33E+33	
ERO	SN-113	0.00E+00	0.00E+00	0.00E+00	0.00E+00	0.00E+00	0.00E+00	0.00E+00	0.00E+00	0.00E+00	0.00E+00	
INT	SN-126	1.61E+04	1.02E+04	5.90E+02	4.10E+03	1.43E+04	1.59E+04	6.92E+03	4.19E+03	1.42E+04	4.10E+03	
ERO	SN-126	1.61E+01	1.02E+01	5.90E-01	4.09E+00	1.43E+01	1.59E+01	6.91E+00	4.18E+00	1.42E+01	4.09E+00	
INT	SB-124	0.00E+00	0.00E+00	0.00E+00	0.00E+00	0.00E+00	0.00E+00	0.00E+00	0.00E+00	0.00E+00	0.00E+00	
ERO	SB-124	0.00E+00	0.00E+00	0.00E+00	0.00E+00	0.00E+00	0.00E+00	0.00E+00	0.00E+00	0.00E+00	0.00E+00	
INT	SB-125	5.45E+08	4.43E+08	6.07E+07	2.64E+08	5.12E+08	5.51E+08	4.78E+08	4.22E+08	4.31E+08	2.64E+08	
ERO	SB-125	0.00E+00	0.00E+00	0.00E+00	0.00E+00	0.00E+00	0.00E+00	0.00E+00	0.00E+00	0.00E+00	0.00E+00	
INT	I-125	0.00E+00	0.00E+00	0.00E+00	0.00E+00	0.00E+00	0.00E+00	0.00E+00	0.00E+00	0.00E+00	0.00E+00	
ERO	I-125	0.00E+00	0.00E+00	0.00E+00	0.00E+00	0.00E+00	0.00E+00	0.00E+00	0.00E+00	0.00E+00	0.00E+00	
INT	I-129	6.21E+05	4.52E+06	5.28E+06	1.66E+05	6.84E+05	7.10E+05	5.67E+05	5.57E+05	7.01E+01	2.33E+03	
ERO	I-129	6.17E+02	4.49E+03	5.24E+03	1.65E+02	6.80E+02	7.05E+02	5.63E+02	5.53E+02	6.96E-02	2.32E+00	
INT	I-131	0.00E+00	0.00E+00	0.00E+00	0.00E+00	0.00E+00	0.00E+00	0.00E+00	0.00E+00	0.00E+00	0.00E+00	
ERO	I-131	0.00E+00	0.00E+00	0.00E+00	0.00E+00	0.00E+00	0.00E+00	0.00E+00	0.00E+00	0.00E+00	0.00E+00	
INT	CS-134	2.52E+07	7.85E+07	6.86E+07	5.77E+07	3.99E+07	4.00E+07	4.30E+07	4.48E+07	5.04E+07	3.57E+07	
ERO	CS-134	0.00E+00	0.00E+00	0.00E+00	0.00E+00	0.00E+00	0.00E+00	0.00E+00	0.00E+00	0.00E+00	0.00E+00	
INT	CS-135	1.44E+04	6.71E+05	3.01E+05	2.44E+04	1.44E+04	1.44E+04	1.44E+04	1.24E+04	1.43E+04	1.43E+04	
ERO	CS-135	1.43E+01	6.66E+02	2.99E+02	2.42E+01	1.43E+01	1.43E+01	1.43E+01	1.23E+01	1.42E+01	1.42E+01	
INT	CS-136	0.00E+00	0.00E+00	0.00E+00	0.00E+00	0.00E+00	0.00E+00	0.00E+00	0.00E+00	0.00E+00	0.00E+00	
ERO	CS-136	0.00E+00	0.00E+00	0.00E+00	0.00E+00	0.00E+00	0.00E+00	0.00E+00	0.00E+00	0.00E+00	0.00E+00	
INT	CS-137	3.19E+03	1.43E+04	1.21E+04	6.44E+03	4.12E+03	4.05E+03	4.31E+03	3.98E+03	4.72E+03	3.89E+03	
ERO	CS-137	1.71E+10	7.62E+10	6.46E+10	3.44E+10	2.20E+10	2.17E+10	2.31E+10	2.13E+10	2.52E+10	2.08E+10	
INT	BA-140	0.00E+00	0.00E+00	0.00E+00	0.00E+00	0.00E+00	0.00E+00	0.00E+00	0.00E+00	0.00E+00	0.00E+00	
ERO	BA-140	0.00E+00	0.00E+00	0.00E+00	0.00E+00	0.00E+00	0.00E+00	0.00E+00	0.00E+00	0.00E+00	0.00E+00	
INT	LA-140	0.00E+00	0.00E+00	0.00E+00	0.00E+00	0.00E+00	0.00E+00	0.00E+00	0.00E+00	0.00E+00	0.00E+00	
ERO	LA-140	0.00E+00	0.00E+00	0.00E+00	0.00E+00	0.00E+00	0.00E+00	0.00E+00	0.00E+00	0.00E+00	0.00E+00	
INT	CE-141	0.00E+00	0.00E+00	0.00E+00	0.00E+00	0.00E+00	0.00E+00	0.00E+00	0.00E+00	0.00E+00	0.00E+00	
ERO	CE-141	0.00E+00	0.00E+00	0.00E+00	0.00E+00	0.00E+00	0.00E+00	0.00E+00	0.00E+00	0.00E+00	0.00E+00	
INT	CE-144	7.22E+17	1.10E+17	5.94E+15	3.89E+17	5.95E+17	7.10E+17	6.27E+17	4.56E+17	5.98E+17	1.20E+16	
ERO	CE-144	0.00E+00	0.00E+00	0.00E+00	0.00E+00	0.00E+00	0.00E+00	0.00E+00	0.00E+00	0.00E+00	0.00E+00	
INT	EU-152	4.56E+05	3.94E+05	7.00E+04	2.37E+05	4.07E+05	1.80E+05	3.29E+05	2.09E+05	4.02E+05	2.37E+05	
ERO	EU-152	4.54E+25	3.92E+25	6.97E+24	2.36E+25	4.05E+25	1.80E+25	3.28E+25	2.08E+25	4.00E+25	2.36E+25	
INT	EU-154	3.06E+05	2.43E+05	2.91E+04	1.31E+05	2.74E+05	1.08E+05	2.02E+05	9.00E+04	2.67E+05	1.31E+05	
ERO	EU-154	5.29E+20	4.20E+20	5.02E+19	2.26E+20	4.74E+20	1.87E+20	3.50E+20	1.56E+20	4.61E+20	2.26E+20	
INT	YB-169	0.00E+00	0.00E+00	0.00E+00	0.00E+00	0.00E+00	0.00E+00	0.00E+00	0.00E+00	0.00E+00	0.00E+00	
ERO	YB-169	0.00E+00	0.00E+00	0.00E+00	0.00E+00	0.00E+00	0.00E+00	0.00E+00	0.00E+00	0.00E+00	0.00E+00	
INT	PB-210	5.52E+02	6.90E+04	1.72E+03	4.49E+02	3.33E+01	1.71E+02	4.43E+02	1.67E+02	5.52E+02	1.45E+02	
ERO	PB-210	1.15E+14	1.44E+16	3.59E+14	9.38E+13	6.97E+12	3.58E+13	9.25E+13	3.48E+13	1.15E+14	3.03E+13	
INT	PO-210	1.55E+26	1.78E+28	4.48E+26	1.97E+26	8.68E+24	5.04E+25	1.49E+26	3.36E+26	1.55E+26	3.96E+25	
ERO	PO-210	0.00E+00	0.00E+00	0.00E+00	0.00E+00	0.00E+00	0.00E+00	0.00E+00	0.00E+00	0.00E+00	0.00E+00	
INT	RN-222	1.07E+06	1.34E+08	3.34E+06	8.71E+05	6.47E+04	3.32E+05	8.59E+05	3.23E+05	1.07E+06	2.82E+05	
ERO	RN-222	2.24E+17	2.80E+19	6.97E+17	1.82E+17	1.35E+16	6.95E+16	1.80E+17	6.75E+16	2.24E+17	5.88E+16	
INT	RA-226	2.48E+02	9.81E+03	6.48E+02	1.12E+02	1.92E+01	9.14E+01	1.40E+02	2.51E+01	2.47E+02	7.20E+01	
ERO	RA-226	2.57E-01	1.30E+01	7.08E-01	1.36E-01	1.83E-02	8.97E-02	1.60E-01	3.30E-02	2.56E-01	7.24E-02	
INT	RA-228	3.24E+04	3.66E+05	1.97E+04	8.32E+03	3.34E+04	3.20E+04	7.99E+03	9.58E+02	3.30E+04	1.33E+04	
ERO	RA-228	0.00E+00	0.00E+00	0.00E+00	0.00E+00	0.00E+00	0.00E+00	0.00E+00	0.00E+00	0.00E+00	0.00E+00	
INT	AC-227	6.83E+03	5.30E+05	2.99E+04	5.94E+02	3.86E+02	4.83E+01	7.73E+01	7.73E+00	6.93E+03	1.40E+02	
ERO	AC-227	2.26E+14	1.75E+16	9.89E+14	1.97E+13	1.28E+13	1.60E+12	2.56E+12	2.56E+11	2.29E+14	4.63E+12	
INT	TH-228	1.17E+09	1.52E+09	7.46E+07	6.12E+08	1.28E+09	8.53E+08	9.10E+07	8.85E+06	1.14E+09	1.57E+08	
ERO	TH-228	0.00E+00	0.00E+00	0.00E+00	0.00E+00	0.00E+00	0.00E+00	0.00E+00	0.00E+00	0.00E+00	0.00E+00	
INT	TH-229	2.33E+04	3.96E+04	3.07E+03	2.79E+03	3.00E+04	1.39E+04	2.61E+02	2.13E+01	2.59E+04	5.22E+02	
ERO	TH-229	2.54E+01	4.31E+01	3.34E+00	3.03E+00	3.26E+01	1.51E+01	2.84E-01	2.32E-02	2.82E+01	5.68E-01	
INT	TH-230	2.19E+04	1.40E+05	3.58E+03	4.33E+03	2.50E+03	8.41E+03	6.48E+02	4.17E+01	2.36E+04	9.60E+02	
ERO	TH-230	4.90E-01	2.13E+01	9.95E-01	2.48E-01	3.52E-02	1.71E-01	2.10E-01	2.52E-02	4.89E-01	1.23E-01	

000541

INVIMPS Example 1 Utility Output (Continued)

INT	TH-232	1.57E+03	2.06E+04	9.99E+02	3.80E+02	1.62E+03	1.52E+03	2.49E+02	2.17E+01	1.60E+03	4.07E+02	
ERO	TH-232	1.49E+00	1.94E+01	9.44E-01	3.61E-01	1.54E+00	1.44E+00	2.40E-01	2.11E-02	1.52E+00	3.92E-01	
INT	PA-231	9.53E+02	4.86E+04	1.33E+03	9.58E+01	5.74E+01	7.33E+00	1.31E+01	1.16E+00	9.59E+02	2.14E+01	
ERO	PA-231	8.47E-01	4.51E+01	1.29E+00	8.36E-02	5.07E-02	6.45E-03	1.14E-02	1.02E-03	8.54E-01	1.88E-02	
INT	U-232	2.44E+04	3.16E+04	1.34E+03	6.69E+03	6.30E+03	2.02E+04	8.74E+02	8.16E+01	2.68E+04	1.67E+03	
ERO	U-232	2.76E+05	3.57E+05	1.51E+04	7.57E+04	7.13E+04	2.29E+05	9.89E+03	9.24E++02	3.03E+05	1.89E+04	
INT	U-233	2.13E+05	1.82E+05	4.27E+03	3.10E+04	1.14E+04	1.01E+06	4.29E+04	3.18E+03	1.06E+06	2.56E+04	
ERO	U-233	1.18E+02	1.29E+02	3.79E+00	1.56E+01	1.10E+01	1.37E+02	2.77E+00	2.25E-01	2.31E+02	4.82E+00	
INT	U-234	2.21E+05	1.85E+05	4.28E+03	3.22E+04	1.15E+04	1.19E+06	8.00E+04	5.33E+03	1.21E+06	2.98E+04	
ERO	U-234	7.23E+01	1.76E+02	4.16E+00	2.00E+01	4.65E+00	3.67E+01	2.50E+01	2.17E+00	9.89E+01	1.35E+01	
INT	U-235	1.57E+05	1.51E+05	4.03E+03	2.80E+04	1.11E+04	1.25E+04	1.85E+04	1.53E+03	2.95E+05	1.65E+04	
ERO	U-235	3.23E+01	1.40E+02	3.76E+00	3.51E+00	2.00E+00	3.03E-01	5.32E-01	4.76E-02	3.60E+01	8.59E-01	
INT	U-236	2.34E+05	1.97E+05	4.53E+03	3.43E+04	1.22E+04	1.29E+06	9.60E+04	5.93E+03	1.29E+06	3.21E+04	
ERO	U-236	2.32E+02	1.95E+02	4.50E+00	3.40E+01	1.21E+01	1.29E+03	9.53E+01	5.89E+00	1.28E+03	3.18E+01	
INT	U-238	4.69E+04	4.83E+04	4.23E+03	2.17E+04	1.06E+04	5.93E+04	3.68E+04	6.15E+03	4.43E+04	2.08E+04	
ERO	U-238	4.65E+01	4.79E+01	4.19E+00	2.15E+01	1.05E+01	5.88E+01	3.64E+01	6.08E+00	4.40E+01	2.06E+01	
INT	NP-237	5.51E+03	1.04E+05	3.40E+03	6.82E+02	3.25E+02	4.27E+01	1.12E+02	7.86E+00	5.60E+03	1.46E+02	
ERO	NP-237	5.47E+00	1.03E+02	3.36E+00	6.78E-01	3.23E-01	4.24E-02	1.11E-01	7.80E-03	5.57E+00	1.45E-01	
INT	PU-236	5.91E+05	7.65E+05	3.23E+04	1.62E+05	1.53E+05	4.77E+05	2.12E+04	1.98E+03	6.51E+05	4.04E+04	
ERO	PU-236	6.69E+06	8.66E+06	3.67E+05	1.84E+06	1.73E+06	5.54E+06	2.40E+05	2.24E+04	7.35E+06	4.57E+05	
INT	PU-238	1.51E+05	2.02E+05	4.53E+03	3.33E+04	1.65E+04	2.15E+03	5.55E+03	4.50E+02	2.92E+05	6.87E+03	
ERO	PU-238	1.44E+05	2.46E+05	5.66E+03	3.47E+04	1.10E+04	4.90E+03	1.13E+04	9.22E+02	2.33E+05	1.18E+04	
INT	PU-239	1.14E+05	1.69E+05	3.74E+03	2.37E+04	1.17E+04	1.52E+03	3.91E+03	2.86E+02	2.05E+05	4.72E+03	
ERO	PU-239	1.16E+02	1.73E+02	3.82E+00	2.42E+01	1.20E+01	1.55E+00	3.99E+00	2.92E-01	2.09E+02	4.81E+00	
INT	PU-240	1.14E+05	1.70E+05	3.75E+03	2.37E+04	1.18E+04	1.52E+03	3.92E+03	2.86E+02	2.06E+05	4.73E+03	
ERO	PU-240	1.26E+02	1.87E+02	4.13E+00	2.61E+01	1.29E+01	1.67E+00	4.31E+00	3.15E-01	2.26E+02	5.20E+00	
INT	PU-241	1.67E+05	4.05E+06	9.48E+04	2.04E+04	9.26E+03	1.20E+03	3.18E+03	2.55E+02	1.70E+05	4.44E+03	
ERO	PU-241	5.64E+02	1.40E+04	3.27E+02	6.87E+01	3.13E+01	4.04E+00	1.07E+01	8.59E-01	5.72E+02	1.50E+01	
INT	PU-242	1.20E+05	1.78E+05	3.94E+03	2.48E+04	1.23E+04	1.58E+03	4.12E+03	2.85E+02	2.15E+05	4.84E+03	
ERO	PU-242	1.19E+02	1.77E+02	3.92E+00	2.47E+01	1.23E+01	1.57E+00	4.10E+00	2.84E-01	2.14E+02	4.81E+00	
INT	PU-244	8.62E+04	1.12E+05	2.47E+03	2.28E+04	1.19E+04	1.60E+03	4.29E+03	2.84E+02	1.21E+05	4.49E+03	
ERO	PU-244	7.97E+01	1.04E+02	2.31E+00	2.07E+01	1.08E+01	1.44E+00	3.86E+00	2.57E-01	1.13E+02	4.08E+00	
INT	AM-241	3.89E+03	9.63E+04	2.26E+03	4.74E+02	2.16E+02	2.79E+01	7.41E+01	5.93E+00	3.95E+03	1.03E+02	
ERO	AM-241	1.67E+01	4.13E+02	9.69E+00	2.04E+00	9.26E-01	1.20E-01	3.18E-01	2.55E-02	1.69E+01	4.44E-01	
INT	AM-243	3.42E+03	7.38E+04	2.06E+03	4.54E+02	2.06E+02	2.67E+01	7.10E+01	5.35E+00	3.46E+03	9.60E+01	
ERO	AM-243	3.70E+00	7.87E+01	2.19E+00	4.90E-01	2.23E-01	2.89E-02	7.67E-02	5.77E-03	3.74E+00	1.04E-01	
INT	CM-242	2.92E+07	3.91E+07	8.77E+05	6.44E+06	3.19E+06	4.15E+05	1.07E+06	8.70E+04	5.65E+07	1.33E+06	
ERO	CM-242	2.79E+07	4.78E+07	1.10E+06	6.73E+06	2.13E+06	9.49E+05	2.20E+06	1.79E+05	4.53E+07	2.29E+06	
INT	CM-243	1.38E+04	1.81E+05	4.74E+03	1.67E+03	7.92E+02	9.91E+01	2.83E+02	2.48E+01	1.43E+04	4.07E+02	
ERO	CM-243	8.87E+04	1.32E+05	2.92E+03	1.84E+04	9.14E+03	1.18E+03	3.04E+03	2.22E+02	1.59E+05	3.67E+03	
INT	CM-244	3.04E+04	4.06E+05	9.15E+03	3.61E+03	1.68E+03	2.17E+02	6.13E+02	5.32E+01	3.16E+04	8.75E+02	
ERO	CM-244	4.71E+04	6.98E+04	1.54E+03	9.76E+03	4.85E+03	6.25E+02	1.61E+03	1.18E+02	8.46E+04	1.94E+03	
INT	CM-248	1.05E+03	7.95E+03	5.64E+02	1.55E+02	7.65E+01	9.84E+00	1.02E+02	7.05E+00	1.29E+03	7.13E+01	
ERO	CM-248	1.05E+00	7.90E+00	5.61E-01	1.54E-01	7.61E-02	9.79E-03	1.01E-01	7.01E-03	1.28E+00	7.09E-02	
INT	CF-252	3.57E+07	7.26E+07	2.74E+06	5.58E+06	2.52E+06	3.27E+05	2.18E+06	1.96E+05	5.01E+07	2.03E+06	
ERO	CF-252	1.86E+05	1.41E+06	9.99E+04	2.75E+04	1.36E+04	1.74E+03	1.80E+04	1.25E+03	2.29E+05	1.26E+04	

OPERATIONAL IMPACTS FOR ISTR= 1

IND	H-3	5.50E+12	5.50E+12	5.17E+12	5.50E+12	5.33E+12	5.55E+12	5.55E+12	6.98E+12	5.55E+12	5.46E+12	
WRK	H-3	9.62E+02	9.62E+02	9.04E+02	9.62E+02	9.32E+02	9.69E+02	9.69E+02	1.22E+03	9.69E+02	9.54E+02	
IND	C-14	1.11E+14	9.36E+13	9.53E+13	4.88E+13	8.69E+13	7.75E+13	2.84E+13	1.35E+13	1.06E+14	6.31E+13	
WRK	C-14	1.94E+04	1.64E+04	1.66E+04	8.52E+03	1.52E+04	1.35E+04	4.97E+03	2.37E+03	1.85E+04	1.10E+04	
IND	NA-22	1.55E+10	1.79E+10	1.75E+10	1.48E+10	1.55E+10	1.63E+10	1.42E+10	1.24E+10	1.33E+10	1.45E+10	
WRK	NA-22	1.19E-02	1.19E-02	1.19E-02	1.19E-02	1.19E-02	1.19E-02	1.18E-02	1.18E-02	1.18E-02	1.19E-02	
IND	P-32	6.97E+09	5.37E+11	6.61E+10	1.78E+11	3.26E+11	3.26E+11	8.86E+10	4.84E+10	3.26E+11	4.41E+10	
WRK	P-32	1.22E+00	9.39E+01	1.16E+01	3.11E+01	5.70E+01	5.70E+01	1.55E+01	8.46E+00	5.70E+01	7.70E+00	
IND	P-33	4.41E+10	2.09E+12	4.95E+11	2.10E+11	3.68E+12	3.68E+12	6.91E+11	2.60E+11	3.68E+12	2.97E+11	
WRK	P-33	7.70E+00	3.65E+02	8.65E+01	3.68E+01	6.43E+02	6.43E+02	1.21E+02	4.54E+01	6.43E+02	5.18E+01	
IND	S-35	3.66E+10	2.59E+12	6.68E+11	1.95E+11	4.09E+12	4.09E+12	4.09E+12	4.09E+12	4.09E+12	2.77E+11	
WRK	S-35	6.39E+00	4.52E+02	1.17E+02	3.41E+01	7.15E+02	7.15E+02	7.15E+02	7.15E+02	7.15E+02	4.85E+01	
IND	CL-36	4.07E+09	2.80E+11	3.70E+11	2.20E+10	3.70E+11	3.70E+11	3.70E+11	3.70E+11	3.70E+11	3.14E+10	
WRK	CL-36	7.11E-01	4.89E+01	6.46E+01	3.85E+00	6.46E+01	6.46E+01	6.46E+01	6.46E+01	6.46E+01	5.49E+00	
IND	CA-45	1.92E+10	2.11E+12	1.35E+11	7.20E+10	4.14E+12	4.14E+11	6.37E+10	4.25E+10	4.14E+12	1.04E+11	
WRK	CA-45	3.36E+00	3.69E+02	2.35E+01	1.26E+01	7.24E+02	7.24E+01	1.11E+01	7.42E+00	7.24E+02	1.82E+01	
IND	SC-46	3.38E+09	1.62E+10	1.40E+10	9.35E+09	1.77E+10	1.49E+10	1.68E+10	1.66E+10	1.42E+10	1.09E+10	
WRK	SC-46	1.26E-02	1.28E-02	1.28E-02	1.28E-02	1.28E-02	1.28E-02	1.28E-02	1.28E-02	1.28E-02	1.28E-02	
IND	CR-51	2.72E+11	1.16E+12	7.43E+11	6.69E+11	1.21E+12	1.15E+12	1.09E+12	9.21E+11	9.40E+11	8.10E+11	
WRK	CR-51	8.47E-01	8.59E-01	8.57E-01	8.56E-01	8.59E-01	8.59E-01	8.58E-01	8.58E-01	8.58E-01	8.57E-01	
IND	MN-54	1.78E+10	4.00E+10	3.93E+10	3.69E+10	3.99E+10	3.08E+10	3.76E+10	3.64E+10	3.37E+10	3.11E+10	
WRK	MN-54	3.10E-02	3.11E-02	3.11E-02	3.11E-02	3.11E-02	3.11E-02	3.11E-02	3.11E-02	3.11E-02	3.11E-02	
IND	FE-55	2.74E+10	5.35E+13	1.76E+12	1.12E+12	1.36E+12	7.18E+11	1.37E+12	2.00E+12	1.39E+12	1.74E+11	
WRK	FE-55	4.79E+00	9.35E+03	3.07E+02	1.96E+02	2.38E+02	1.25E+02	2.39E+02	3.50E+02	2.43E+02	3.03E+01	
IND	FE-59	6.79E+09	3.08E+10	2.15E+10	2.79E+10	3.07E+10	2.78E+10	3.01E+10	2.96E+10	2.58E+10	1.95E+10	
WRK	FE-59	2.13E-02	2.16E-02	2.16E-02	2.16E-02	2.16E-02	2.16E-02	2.16E-02	2.16E-02	2.16E-02	2.16E-02	
IND	CO-57	1.08E+10	1.74E+11	1.59E+11	1.48E+11	2.33E+11	1.50E+11	1.69E+11	1.34E+11	1.70E+11	5.74E+10	
WRK	CO-57	2.47E-01	2.82E-01	2.82E-01	2.81E-01	2.82E-01	2.81E-01	2.82E-01	2.81E-01	2.82E-01	2.77E-01	
IND	CO-58	9.10E+09	3.38E+10	3.09E+10	3.18E+10	3.63E+10	3.21E+10	3.42E+10	3.30E+10	2.89E+10	2.37E+10	
WRK	CO-58	3.12E-02	3.17E-02	3.17E-02	3.17E-02	3.17E-02	3.17E-02	3.17E-02	3.17E-02	3.16E-02	3.16E-02	
IND	CO-60	5.14E+08	5.08E+09	1.08E+10	5.61E+09	7.12E+09	4.41E+09	6.67E+09	7.50E+09	6.38E+09	2.44E+09	
WRK	CO-60	9.23E-03	1.02E-02	1.02E-02	1.02E-02	1.02E-02	1.02E-02	1.02E-02	1.02E-02	1.02E-02	1.01E-02	
IND	NI-59	1.55E+11	1.75E+12	8.30E+11	7.44E+11	1.79E+12	1.79E+12	1.75E+12	1.77E+12	1.63E+12	7.44E+11	
WRK	NI-59	2.71E+01	3.07E+02	1.45E+02	1.30E+02	3.12E+02	3.12E+02	3.06E+02	3.08E+02	2.85E+02	1.30E+02	
IND	NI-63	6.03E+10	7.23E+11	2.76E+11	2.99E+11	7.49E+11	7.53E+11	7.53E+11	7.53E+11	7.53E+11	2.99E+11	
WRK	NI-63	1.05E+01	1.26E+02	4.83E+01	5.23E+01	1.31E+02	1.31E+02	1.31E+02	1.31E+02	1.31E+02	5.23E+01	
IND	ZN-65	8.03E+09	3.20E+10	4.09E+10	3.11E+10	3.13E+10	2.60E+10	2.97E+10	3.12E+10	3.06E+10	2.12E+10	
WRK	ZN-65	4.41E-02	4.52E-02	4.53E-02	4.52E-02	4.52E-02	4.51E-02	4.52E-02	4.52E-02	4.52E-02	4.50E-02	
IND	SE-75	2.56E+10	5.69E+10	6.68E+10	4.05E+10	2.98E+10	3.36E+10	5.63E+10	4.93E+10	5.76E+10	4.44E+10	
WRK	SE-75	7.88E-02	7.95E-02	7.96E-02	7.93E-02	7.90E-02	7.91E-02	7.95E-02	7.94E-02	7.95E-02	7.93E-02	
IND	RB-86	7.49E+10	3.24E+11	2.61E+11	8.30E+10	5.46E+10	5.49E+10	5.49E+10	5.45E+10	5.34E+10	5.53E+10	
WRK	RB-86	2.68E-01	2.72E-01	2.72E-01	2.68E-01	2.66E-01	2.66E-01	2.66E-01	2.66E-01	2.65E-01	2.66E-01	
IND	SR-85	1.96E+10	6.62E+10	6.19E+10	4.38E+10	7.02E+10	6.30E+10	6.51E+10	6.03E+10	5.66E+10	4.93E+10	
WRK	SR-85	5.07E-02	5.12E-02	5.12E-02	5.11E-02	5.12E-02	5.12E-02	5.12E-02	5.12E-02	5.12E-02	5.12E-02	
IND	SR-89	2.22E+09	5.63E+11	1.31E+10	1.44E+11	1.50E+13	1.50E+13	2.58E+12	1.26E+12	1.48E+13	1.60E+10	
WRK	SR-89	3.88E-01	9.52E+01	2.28E+00	2.50E+01	1.40E+03	1.40E+03	3.92E+02	2.05E+02	1.39E+03	2.79E+00	
IND	SR-90	8.09E+07	2.41E+10	7.73E+08	4.59E+09	1.88E+11	3.62E+10	5.73E+09	2.99E+09	1.88E+11	4.74E+08	
WRK	SR-90	1.41E-02	4.20E+00	1.35E-01	8.01E-01	3.29E+01	6.33E+00	1.00E+00	5.23E-01	3.29E+01	8.29E-02	
IND	ZR-95	4.79E+09	3.77E+10	2.45E+10	3.44E+10	4.24E+10	3.61E+10	3.92E+10	3.73E+10	3.35E+10	1.93E+10	
WRK	ZR-95	1.69E-02	1.72E-02	1.72E-02	1.72E-02	1.72E-02	1.72E-02	1.72E-02	1.72E-02	1.72E-02	1.72E-02	
IND	NB-94	2.46E+08	4.83E+09	1.17E+10	1.56E+09	7.09E+09	4.05E+09	6.22E+09	6.72E+09	5.96E+09	1.56E+09	
WRK	NB-94	1.21E-02	1.65E-02	1.67E-02	1.58E-02	1.66E-02	1.64E-02	1.65E-02	1.66E-02	1.65E-02	1.58E-02	
IND	NB-95	1.57E+10	4.80E+10	3.64E+10	4.38E+10	4.91E+10	4.71E+10	4.67E+10	4.44E+10	3.90E+10	3.47E+10	
WRK	NB-95	3.35E-02	3.38E-02	3.38E-02	3.38E-02	3.38E-02	3.38E-02	3.38E-02	3.38E-02	3.38E-02	3.38E-02	
IND	MO-99	3.20E+10	2.08E+11	3.01E+10	2.09E+11	2.30E+11	2.18E+11	2.44E+11	2.16E+11	1.96E+11	9.56E+10	
WRK	MO-99	1.79E-01	1.84E-01	1.79E-01	1.84E-01	1.84E-01	1.84E-01	1.84E-01	1.84E-01	1.84E-01	1.83E-01	
IND	TC-99	1.32E+10	1.21E+12	4.14E+11	7.76E+11	2.24E+12	1.63E+12	3.20E+12	2.50E+12	7.27E+10	9.49E+10	
WRK	TC-99	2.30E+00	2.11E+02	7.24E+01	1.35E+02	3.91E+02	2.85E+02	5.59E+02	4.37E+02	1.27E+01	1.66E+01	
IND	TC-99M	2.82E+11	3.38E+11	3.46E+11	2.78E+11	3.32E+11	3.33E+11	3.34E+11	1.95E+11	2.18E+11	2.76E+11	
WRK	TC-99M	2.69E-01	2.70E-01	2.70E-01	2.69E-01	2.70E-01	2.70E-01	2.70E-01	2.69E-01	2.69E-01	2.69E-01	
IND	RU-103	1.03E+10	7.33E+10	3.58E+10	6.38E+10	7.66E+10	7.17E+10	7.16E+10	6.51E+10	6.16E+10	3.78E+10	

000543

INVIMPS Example 1 Utility Output (Continued)

WRK	RU-103	5.58E-02	5.73E-02	5.71E-02	5.73E-02	5.73E-02	5.73E-02	5.73E-02	5.73E-02	5.73E-02	5.71E-02
IND	RU-106	1.81E+08	6.77E+10	4.81E+09	1.05E+10	5.57E+10	4.67E+10	5.33E+10	4.92E+10	5.09E+10	1.31E+09
WRK	RU-106	2.59E-02	1.42E-01	1.23E-01	1.33E-01	1.42E-01	1.41E-01	1.42E-01	1.41E-01	1.41E-01	8.82E-02
IND	AG-108	4.01E+08	4.90E+09	1.47E+10	2.20E+09	7.39E+09	3.31E+09	6.41E+09	7.33E+09	6.31E+09	2.20E+09
WRK	AG-108	1.44E-02	1.77E-02	1.80E-02	1.73E-02	1.79E-02	1.76E-02	1.78E-02	1.79E-02	1.78E-02	1.73E-02
IND	AG-110	1.41E+09	8.51E+09	1.09E+10	5.36E+09	1.02E+10	6.33E+09	9.72E+09	9.96E+09	8.57E+09	5.36E+09
WRK	AG-110	9.25E-03	9.55E-03	9.56E-03	9.51E-03	9.56E-03	9.53E-03	9.56E-03	9.56E-03	9.55E-03	9.51E-03
IND	CD-109	2.38E+09	4.37E+11	7.41E+10	1.07E+10	5.54E+09	2.93E+11	4.12E+11	4.43E+11	6.88E+11	1.52E+10
WRK	CD-109	2.61E-01	6.96E-01	6.67E-01	5.11E-01	4.07E-01	6.93E-01	6.96E-01	6.96E-01	6.99E-01	5.56E-01
IND	SN-113	9.47E+09	1.21E+11	3.71E+10	4.38E+10	1.29E+11	1.22E+11	9.20E+10	6.56E+10	1.04E+11	4.38E+10
WRK	SN-113	1.01E-01	1.07E-01	1.06E-01	1.06E-01	1.07E-01	1.07E-01	1.07E-01	1.07E-01	1.07E-01	1.06E-01
IND	SN-126	1.09E+09	7.59E+09	4.21E+09	3.85E+09	7.52E+09	7.49E+09	5.00E+09	3.31E+09	6.19E+09	3.85E+09
WRK	SN-126	1.26E-02	1.34E-02	1.33E-02	1.33E-02	1.34E-02	1.34E-02	1.33E-02	1.32E-02	1.34E-02	1.33E-02
IND	SB-124	3.77E+09	2.08E+10	1.02E+10	1.21E+10	2.14E+10	2.00E+10	2.02E+10	1.86E+10	1.76E+10	1.21E+10
WRK	SB-124	1.41E-02	1.43E-02	1.43E-02	1.43E-02	1.43E-02	1.43E-02	1.43E-02	1.43E-02	1.43E-02	1.43E-02
IND	SB-125	7.85E+09	7.59E+10	3.63E+10	3.38E+10	8.02E+10	6.89E+10	7.35E+10	5.54E+10	6.47E+10	3.38E+10
WRK	SB-125	6.12E-02	6.38E-02	6.34E-02	6.34E-02	6.38E-02	6.37E-02	6.38E-02	6.36E-02	6.37E-02	6.34E-02
IND	I-125	2.35E+11	3.71E+11	4.27E+11	1.70E+10	1.59E+11	3.66E+11	6.40E+11	1.54E+11	8.55E+08	2.47E+10
WRK	I-125	5.02E-01	5.04E-01	5.05E-01	4.34E-01	4.99E-01	5.04E-01	5.06E-01	4.99E-01	1.15E-01	4.55E-01
IND	I-129	2.13E+11	3.77E+11	4.38E+11	1.03E+11	1.53E+11	2.88E+11	4.51E+11	1.42E+11	1.37E+08	4.45E+09
WRK	I-129	7.83E+00	8.61E+00	8.77E+00	6.39E+00	7.23E+00	8.28E+00	8.80E+00	7.09E+00	2.40E-02	7.21E-01
IND	I-131	8.20E+09	9.23E+09	9.44E+09	7.65E+09	8.59E+09	9.08E+09	8.30E+09	6.74E+09	5.71E+08	5.57E+09
WRK	I-131	7.02E-02	7.06E-02	7.07E-02	7.00E-02	7.04E-02	7.06E-02	7.03E-02	6.95E-02	4.25E-02	6.86E-02
IND	CS-134	1.15E+10	1.21E+10	1.13E+10	9.37E+09	7.37E+09	7.29E+09	7.80E+09	7.79E+09	8.12E+09	7.36E+09
WRK	CS-134	1.68E-02	1.68E-02	1.68E-02	1.68E-02	1.67E-02	1.67E-02	1.67E-02	1.67E-02	1.68E-02	1.67E-02
IND	CS-135	1.07E+12	1.80E+13	8.08E+12	1.56E+11	9.21E+10	9.21E+10	9.21E+10	7.98E+10	9.20E+10	1.03E+11
WRK	CS-135	1.88E+02	3.15E+03	1.41E+03	2.73E+01	1.61E+01	1.61E+01	1.61E+01	1.39E+01	1.61E+01	1.80E+01
IND	CS-136	1.61E+10	1.82E+10	1.82E+10	1.57E+10	1.57E+10	1.62E+10	1.57E+10	1.46E+10	1.34E+10	1.48E+10
WRK	CS-136	1.22E-02	1.22E-02	1.22E-02	1.22E-02	1.22E-02	1.22E-02	1.22E-02	1.22E-02	1.22E-02	1.22E-02
IND	CS-137	2.61E+10	2.96E+10	2.74E+10	4.89E+10	1.12E+10	1.11E+10	1.16E+10	1.07E+10	1.20E+10	1.16E+10
WRK	CS-137	4.66E-02	4.66E-02	4.66E-02	4.68E-02	4.60E-02	4.60E-02	4.60E-02	4.59E-02	4.60E-02	4.60E-02
IND	BA-140	5.32E+10	1.68E+11	3.33E+10	1.24E+11	1.50E+11	1.57E+11	1.00E+11	7.57E+10	1.14E+11	8.22E+10
WRK	BA-140	1.49E-01	1.51E-01	1.48E-01	1.51E-01	1.51E-01	1.51E-01	1.51E-01	1.50E-01	1.51E-01	1.50E-01
IND	LA-140	1.23E+10	1.97E+10	1.27E+10	1.76E+10	1.84E+10	1.89E+10	1.85E+10	1.74E+10	1.55E+10	1.58E+10
WRK	LA-140	1.14E-02	1.14E-02	1.14E-02	1.14E-02	1.14E-02	1.14E-02	1.14E-02	1.14E-02	1.14E-02	1.14E-02
IND	CE-141	1.07E+10	3.87E+11	4.16E+10	2.63E+11	4.49E+11	3.35E+11	4.61E+11	2.91E+11	3.55E+11	6.41E+10
WRK	CE-141	3.50E-01	4.28E-01	4.07E-01	4.27E-01	4.29E-01	4.28E-01	4.29E-01	4.28E-01	4.28E-01	4.15E-01
IND	CE-144	2.37E+08	1.26E+11	5.26E+09	1.44E+10	2.79E+10	8.37E+09	7.05E+10	4.32E+10	3.29E+11	1.73E+09
WRK	CE-144	3.87E-02	5.75E-01	3.60E-01	4.78E-01	5.27E-01	4.21E-01	5.64E-01	5.48E-01	5.85E-01	2.00E-01
IND	EU-152	2.97E+09	7.60E+09	9.54E+09	2.86E+09	4.43E+09	5.30E+08	2.21E+09	7.57E+08	1.28E+10	2.86E+09
WRK	EU-152	2.45E-02	2.52E-02	2.53E-02	2.45E-02	2.49E-02	2.01E-02	2.41E-02	2.15E-02	2.54E-02	2.45E-02
IND	EU-154	2.20E+09	8.08E+09	3.76E+10	2.24E+09	4.75E+09	4.30E+08	1.67E+09	3.51E+08	1.33E+10	2.24E+09
WRK	EU-154	2.18E-02	2.27E-02	2.30E-02	2.18E-02	2.25E-02	1.77E-02	2.14E-02	1.68E-02	2.29E-02	2.18E-02
IND	YB-169	1.22E+10	1.18E+11	4.10E+10	4.03E+10	1.24E+11	1.16E+11	1.24E+11	6.42E+10	8.75E+10	5.08E+10
WRK	YB-169	1.07E-01	1.13E-01	1.11E-01	1.11E-01	1.13E-01	1.13E-01	1.13E-01	1.12E-01	1.12E-01	1.12E-01
IND	PB-210	1.11E+08	5.64E+11	1.46E+10	1.97E+08	2.08E+08	2.22E+08	3.13E+08	3.44E+07	1.03E+09	2.65E+08
WRK	PB-210	1.94E-02	1.34E+01	2.19E+00	3.43E-02	3.63E-02	3.87E-02	5.44E-02	6.01E-03	1.77E-01	4.61E-02
IND	PO-210	1.50E+07	3.10E+11	7.83E+09	5.29E+08	4.91E+07	2.75E+08	8.29E+08	1.86E+09	8.60E+08	7.85E+07
WRK	PO-210	2.61E-03	5.22E+01	1.37E+00	9.24E-02	8.59E-03	4.81E-02	1.45E-01	3.25E-01	1.50E-01	1.37E-02
IND	RN-222	9.24E+09	1.03E+10	1.04E+10	8.97E+09	9.61E+09	1.01E+10	9.42E+09	8.63E+09	7.72E+09	8.94E+09
WRK	RN-222	1.66E-02	1.66E-02	1.66E-02	1.66E-02	1.66E-02	1.66E-02	1.66E-02	1.66E-02	1.66E-02	1.66E-02
IND	RA-226	1.23E+07	9.77E+09	2.80E+09	1.44E+08	9.40E+08	9.45E+08	2.67E+08	2.98E+07	9.18E+08	8.01E+07
WRK	RA-226	2.14E-03	1.28E+00	4.45E-01	2.50E-02	1.59E-01	1.60E-01	4.63E-02	5.20E-03	1.55E-01	1.40E-02
IND	RA-228	1.43E+08	2.92E+10	8.22E+09	2.73E+08	1.24E+09	9.00E+08	4.01E+08	4.91E+07	1.23E+09	3.79E+08
WRK	RA-228	1.49E-02	3.67E-02	3.61E-02	2.09E-02	3.16E-02	3.00E-02	2.42E-02	6.96E-03	3.16E-02	2.37E-02
IND	AC-227	6.68E+05	8.60E+09	3.81E+08	6.81E+06	7.56E+06	9.91E+05	1.53E+06	1.54E+05	1.06E+08	1.32E+06
WRK	AC-227	1.17E-04	8.46E-02	3.82E-02	1.17E-03	1.30E-03	1.73E-04	2.66E-04	2.69E-05	1.53E-02	2.31E-04
IND	TH-228	9.61E+05	4.72E+09	2.33E+08	3.61E+07	5.07E+08	2.69E+08	1.86E+07	1.72E+06	7.41E+08	5.13E+06
WRK	TH-228	1.66E-04	1.81E-02	1.27E-02	4.70E-03	1.53E-02	1.33E-02	2.76E-03	2.95E-04	1.62E-02	8.55E-04
IND	TH-229	5.59E+05	3.73E+09	4.80E+08	6.43E+06	1.45E+08	4.58E+07	1.04E+06	8.80E+04	1.62E+08	1.08E+06
WRK	TH-229	9.76E-05	1.10E-01	5.14E-02	1.11E-03	2.13E-02	7.54E-03	1.82E-04	1.54E-05	2.33E-02	1.89E-04
IND	TH-230	1.31E+06	2.57E+11	6.88E+09	1.81E+07	6.25E+08	1.25E+08	2.71E+06	1.73E+05	6.25E+08	2.66E+06
WRK	TH-230	2.28E-04	3.45E+01	1.19E+00	3.16E-03	1.09E-01	2.18E-02	4.73E-04	3.02E-05	1.09E-01	4.64E-04

IND	TH-232	1.52E+06	9.00E+10	6.25E+09	1.81E+07	6.25E+08	1.40E+08	2.54E+06	1.52E+05	6.25E+08	2.59E+06
WRK	TH-232	2.65E-04	1.57E+01	1.09E+00	3.16E-03	1.09E-01	2.45E-02	4.44E-04	2.65E-05	1.09E-01	4.52E-04
IND	PA-231	1.16E+06	2.70E+10	4.04E+09	4.98E+06	3.58E+06	4.62E+05	8.51E+05	7.35E+04	5.73E+07	1.04E+06
WRK	PA-231	2.02E-04	6.68E-01	3.70E-01	8.70E-04	6.25E-04	8.07E-05	1.49E-04	1.28E-05	9.89E-03	1.82E-04
IND	U-232	7.76E+05	1.23E+10	6.25E+08	1.30E+07	1.19E+08	1.53E+08	7.82E+06	7.21E+05	3.82E+08	2.12E+06
WRK	U-232	1.36E-04	2.13E+00	1.09E-01	2.27E-03	2.07E-02	2.67E-02	1.37E-03	1.26E-04	6.67E-02	3.71E-04
IND	U-233	1.27E+06	1.78E+11	6.25E+09	4.05E+07	4.05E+08	4.44E+10	2.87E+09	1.91E+08	4.19E+10	6.14E+06
WRK	U-233	2.22E-04	2.93E+01	1.09E+00	7.07E-03	7.07E-02	7.64E+00	5.00E-01	3.34E-02	7.22E+00	1.07E-03
IND	U-234	1.28E+06	1.80E+11	6.25E+09	4.30E+07	4.05E+08	4.25E+10	2.87E+09	1.97E+08	4.27E+10	6.20E+06
WRK	U-234	2.24E-04	2.86E+01	1.09E+00	7.51E-03	7.07E-02	7.25E+00	5.00E-01	3.43E-02	7.30E+00	1.08E-03
IND	U-235	1.42E+06	2.52E+10	2.72E+09	4.59E+07	4.58E+08	2.01E+10	3.57E+09	2.37E+08	2.80E+10	6.90E+06
WRK	U-235	2.48E-04	2.04E-01	1.48E-01	7.72E-03	5.82E-02	2.02E-01	1.59E-01	3.47E-02	2.05E-01	1.20E-03
IND	U-236	1.36E+06	1.80E+11	6.88E+09	4.30E+07	4.30E+08	4.44E+10	3.44E+09	2.15E+08	4.52E+10	6.61E+06
WRK	U-236	2.38E-04	2.98E+01	1.20E+00	7.51E-03	7.51E-02	7.66E+00	6.00E-01	3.76E-02	7.80E+00	1.16E-03
IND	U-238	1.43E+06	1.76E+10	2.22E+09	4.59E+07	4.49E+08	1.43E+10	2.96E+09	2.34E+08	1.20E+10	6.97E+06
WRK	U-238	2.50E-04	1.36E+00	3.35E-01	7.97E-03	7.60E-02	1.23E+00	4.26E-01	4.02E-02	1.13E+00	1.22E-03
IND	NP-237	1.21E+06	1.35E+10	3.75E+09	1.04E+07	6.74E+06	8.72E+05	2.29E+06	1.62E+05	1.18E+08	1.99E+06
WRK	NP-237	2.11E-04	1.37E-01	1.19E-01	1.80E-03	1.17E-03	1.52E-04	4.00E-04	2.83E-05	1.81E-02	3.47E-04
IND	PU-236	1.55E+06	1.99E+11	5.29E+09	5.73E+07	1.04E+08	1.38E+07	3.82E+07	3.29E+06	2.02E+09	8.65E+06
WRK	PU-236	2.70E-04	3.37E+01	9.24E-01	1.00E-02	1.82E-02	2.40E-03	6.68E-03	5.75E-04	3.53E-01	1.51E-03
IND	PU-238	1.13E+06	2.37E+11	5.73E+09	1.15E+07	7.64E+06	9.83E+05	2.64E+06	2.10E+05	1.35E+08	2.24E+06
WRK	PU-238	1.98E-04	4.03E+01	1.00E+00	2.00E-03	1.34E-03	1.72E-04	4.61E-04	3.68E-05	2.36E-02	3.92E-04
IND	PU-239	1.19E+06	2.53E+11	6.25E+09	1.03E+07	6.68E+06	8.63E+05	2.27E+06	1.65E+05	1.19E+08	1.98E+06
WRK	PU-239	2.07E-04	4.42E+01	1.09E+00	1.79E-03	1.17E-03	1.51E-04	3.97E-04	2.89E-05	2.07E-02	3.46E-04
IND	PU-240	1.19E+06	2.51E+11	6.25E+09	1.03E+07	6.68E+06	8.65E+05	2.28E+06	1.66E+05	1.19E+08	1.99E+06
WRK	PU-240	2.08E-04	4.23E+01	1.09E+00	1.79E-03	1.17E-03	1.51E-04	3.98E-04	2.90E-05	2.07E-02	3.47E-04
IND	PU-241	6.25E+08	6.68E+12	1.00E+12	5.73E+08	3.13E+08	4.05E+07	1.01E+08	8.09E+06	4.30E+09	1.28E+08
WRK	PU-241	1.09E-01	1.16E+03	1.74E+02	1.00E-01	5.46E-02	7.07E-03	1.77E-02	1.41E-03	7.51E-01	2.23E-02
IND	PU-242	1.25E+06	2.50E+11	6.25E+09	1.09E+07	7.02E+06	9.09E+05	2.40E+06	1.64E+05	1.23E+08	2.05E+06
WRK	PU-242	2.19E-04	4.22E+01	1.09E+00	1.91E-03	1.23E-03	1.59E-04	4.19E-04	2.87E-05	2.15E-02	3.58E-04
IND	PU-244	1.26E+06	4.74E+09	1.05E+09	1.09E+07	7.09E+06	9.18E+05	2.54E+06	1.62E+05	1.25E+08	2.06E+06
WRK	PU-244	2.19E-04	8.80E-02	6.41E-02	1.87E-03	1.22E-03	1.60E-04	4.42E-04	2.83E-05	1.79E-02	3.59E-04
IND	AM-241	1.12E+06	7.56E+10	5.28E+09	9.97E+06	6.49E+06	8.35E+05	2.20E+06	1.76E+05	1.15E+08	1.98E+06
WRK	AM-241	1.95E-04	1.80E+00	6.40E-01	1.74E-03	1.13E-03	1.46E-04	3.85E-04	3.08E-05	1.98E-02	3.45E-04
IND	AM-243	1.16E+06	1.09E+10	1.84E+09	9.97E+06	6.43E+06	8.36E+05	2.20E+06	1.65E+05	1.13E+08	1.95E+06
WRK	AM-243	2.02E-04	1.56E-01	1.11E-01	1.72E-03	1.12E-03	1.46E-04	3.83E-04	2.88E-05	1.76E-02	3.40E-04
IND	CM-242	4.00E+06	2.55E+11	5.73E+09	2.29E+08	9.17E+08	1.19E+08	3.44E+08	2.99E+07	1.39E+10	2.97E+07
WRK	CM-242	6.99E-04	3.92E+01	9.99E-01	4.01E-02	1.60E-01	2.07E-02	6.01E-02	5.23E-03	2.41E+00	5.18E-03
IND	CM-243	1.10E+06	2.89E+10	4.53E+09	1.43E+07	1.01E+07	1.31E+06	3.62E+06	3.20E+05	1.86E+08	2.80E+06
WRK	CM-243	1.92E-04	2.72E-01	2.11E-01	2.48E-03	1.76E-03	2.28E-04	6.31E-04	5.59E-05	2.92E-02	4.88E-04
IND	CM-244	1.13E+06	2.28E+11	5.29E+09	1.76E+07	1.32E+07	1.73E+06	4.88E+06	4.25E+05	2.55E+08	3.36E+06
WRK	CM-244	1.98E-04	3.92E+01	9.24E-01	3.08E-03	2.31E-03	3.02E-04	8.52E-04	7.42E-05	4.45E-02	5.86E-04
IND	CM-248	3.10E+05	2.02E+08	3.82E+08	2.65E+06	1.72E+06	2.23E+05	2.32E+06	1.61E+05	2.87E+07	7.83E+05
WRK	CM-248	5.41E-05	3.54E-02	6.68E-02	4.62E-04	3.00E-04	3.89E-05	4.05E-04	2.81E-05	5.01E-03	1.37E-04
IND	CF-252	7.90E+05	2.15E+09	2.02E+09	3.28E+07	5.73E+07	7.32E+06	4.59E+07	4.22E+06	1.01E+09	4.98E+06
WRK	CF-252	1.38E-04	3.64E-01	3.43E-01	5.72E-03	1.00E-02	1.28E-03	8.01E-03	7.37E-04	1.74E-01	8.71E-04

INVIMPS Example 1 Utility Output (Continued)

OVERFLOW SURFACE WATER LIMITS FOR ISTR= 1

OV-OP H-3	2.52E+03	1.95E+03	1.48E+03	2.54E+03	2.46E+03	2.55E+03	2.55E+03	3.22E+03	2.55E+03	2.35E+03
OV-PO H-3	1.48E+01	1.15E+01	8.65E+00	1.49E+01	1.45E+01	1.49E+01	1.50E+01	1.89E+01	1.49E+01	1.38E+01
OV-OP C-14	1.21E+04	8.52E+03	7.06E+03	5.37E+03	9.72E+03	8.38E+03	3.05E+03	1.46E+03	1.16E+04	6.69E+03
OV-PO C-14	1.32E+01	9.23E+00	7.65E+00	5.82E+00	1.05E+01	9.08E+00	3.30E+00	1.58E+00	1.26E+01	7.25E+00
OV-OP NA-22	3.34E+05	7.16E+05	5.85E+05	5.62E+05	5.31E+05	5.64E+05	4.23E+05	3.38E+05	5.92E+05	4.39E+05
OV-PO NA-22	1.02E+06	2.19E+06	1.79E+06	1.72E+06	1.63E+06	1.73E+06	1.30E+06	1.03E+06	1.81E+06	1.35E+06
OV-OP P-32	3.03E+04	4.11E+04	5.03E+03	2.62E+04	3.07E+04	3.06E+04	8.32E+03	4.56E+03	3.06E+04	1.64E+04
OV-PO P-32	0.00E+00	0.00E+00	0.00E+00	0.00E+00	0.00E+00	0.00E+00	0.00E+00	0.00E+00	0.00E+00	0.00E+00
OV-OP P-33	3.55E+05	1.83E+05	3.93E+04	1.11E+05	3.55E+05	3.55E+05	6.66E+04	2.52E+04	3.55E+05	1.34E+05
OV-PO P-33	0.00E+00	0.00E+00	0.00E+00	0.00E+00	0.00E+00	0.00E+00	0.00E+00	0.00E+00	0.00E+00	0.00E+00
OV-OP S-35	1.07E+06	6.15E+05	1.43E+05	6.77E+05	1.07E+06	1.07E+06	3.96E+09	1.07E+06	1.07E+06	6.75E+05
OV-PO S-35	0.00E+00	0.00E+00	0.00E+00	0.00E+00	0.00E+00	0.00E+00	0.00E+00	0.00E+00	0.00E+00	0.00E+00
OV-OP CL-36	2.08E+02	1.50E+02	2.08E+02	2.01E+02	2.08E+02	2.08E+02	2.08E+02	2.08E+02	2.08E+02	2.03E+02
OV-PO CL-36	2.25E-01	1.62E-01	2.25E-01	2.18E-01	2.25E-01	2.25E-01	2.25E-01	2.25E-01	2.25E-01	2.20E-01
OV-OP CA-45	7.49E+06	2.81E+06	1.43E+05	3.47E+05	7.50E+06	7.49E+06	1.16E+05	7.65E+04	7.50E+06	4.70E+05
OV-PO CA-45	6.95E+23	2.60E+23	1.32E+22	3.22E+22	6.96E+23	6.96E+23	1.08E+22	7.10E+21	6.96E+23	4.36E+22
OV-OP SC-46	1.72E+07	1.44E+07	3.21E+06	1.01E+07	1.58E+07	1.72E+07	1.48E+07	1.54E+07	1.40E+07	9.87E+06
OV-PO SC-46	0.00E+00	0.00E+00	0.00E+00	0.00E+00	0.00E+00	0.00E+00	0.00E+00	0.00E+00	0.00E+00	0.00E+00
OV-OP CR-51	8.42E+07	6.34E+07	1.04E+07	4.13E+07	7.76E+07	8.33E+07	6.65E+07	6.27E+07	6.93E+07	4.25E+07
OV-PO CR-51	0.00E+00	0.00E+00	0.00E+00	0.00E+00	0.00E+00	0.00E+00	0.00E+00	0.00E+00	0.00E+00	0.00E+00
OV-OP MN-54	2.05E+05	3.15E+05	6.40E+04	3.52E+05	3.09E+05	1.34E+05	2.61E+05	3.22E+05	6.78E+05	1.61E+05
OV-PO MN-54	1.67E+13	2.57E+13	5.23E+12	2.88E+13	2.52E+13	1.10E+13	2.14E+13	2.63E+13	5.55E+13	1.31E+13
OV-OP FE-55	2.62E+05	1.01E+07	2.62E+05	5.30E+05	2.88E+05	1.52E+05	2.90E+05	4.25E+05	2.94E+05	2.38E+05
OV-PO FE-55	8.50E+05	3.28E+07	8.53E+05	1.72E+06	9.38E+05	4.95E+05	9.42E+05	1.38E+06	9.55E+05	7.75E+05
OV-OP FE-59	8.45E+04	1.25E+05	2.37E+04	1.23E+05	1.08E+05	9.04E+04	1.13E+05	1.20E+05	1.21E+05	7.14E+04
OV-PO FE-59	0.00E+00	0.00E+00	0.00E+00	0.00E+00	0.00E+00	0.00E+00	0.00E+00	0.00E+00	0.00E+00	0.00E+00
OV-OP CO-57	8.62E+05	9.43E+05	1.59E+05	9.07E+05	1.02E+06	9.72E+05	8.86E+05	6.69E+05	8.07E+05	5.45E+05
OV-PO CO-57	1.50E+15	1.64E+15	2.77E+14	1.58E+15	1.77E+15	1.70E+15	1.54E+15	1.17E+15	1.41E+15	9.51E+14
OV-OP CO-58	2.19E+05	2.22E+05	6.86E+04	2.18E+05	2.33E+05	2.43E+05	2.19E+05	2.20E+05	2.05E+05	1.57E+05
OV-PO CO-58	0.00E+00	0.00E+00	0.00E+00	0.00E+00	0.00E+00	0.00E+00	0.00E+00	0.00E+00	0.00E+00	0.00E+00
OV-OP CO-60	8.92E+03	1.13E+04	3.51E+03	1.09E+04	1.05E+04	1.01E+04	1.06E+04	1.11E+04	1.23E+04	7.64E+03
OV-PO CO-60	5.05E+02	6.39E+02	1.99E+02	6.16E+02	5.95E+02	5.75E+02	5.98E+02	6.26E+02	6.99E+02	4.33E+02
OV-OP NI-59	5.68E+05	4.86E+05	7.40E+04	3.49E+05	5.60E+05	5.60E+05	5.48E+05	5.51E+05	5.13E+05	3.49E+05
OV-PO NI-59	6.14E+02	5.25E+02	8.00E+01	3.77E+02	6.05E+02	6.05E+02	5.92E+02	5.95E+02	5.54E+02	3.77E+02
OV-OP NI-63	2.52E+05	2.04E+05	2.34E+04	1.38E+05	2.52E+05	2.52E+05	2.52E+05	2.52E+05	2.52E+05	1.38E+05
OV-PO NI-63	3.42E+02	2.77E+02	3.17E+01	1.87E+02	3.42E+02	3.42E+02	3.42E+02	3.42E+02	3.42E+02	1.87E+02
OV-OP ZN-65	4.07E+03	1.08E+04	7.59E+03	9.01E+03	6.78E+03	6.87E+03	6.63E+03	7.39E+02	1.00E+04	5.95E+03
OV-PO ZN-65	1.16E+14	3.07E+14	2.15E+14	2.56E+14	1.93E+14	1.95E+14	1.88E+14	2.10E+13	2.85E+14	1.69E+14
OV-OP SE-75	8.20E+04	6.46E+04	7.11E+04	5.14E+04	2.08E+04	2.59E+04	6.73E+04	7.69E+04	1.09E+05	5.44E+04
OV-PO SE-75	2.03E+29	1.60E+29	1.76E+29	1.27E+29	5.16E+28	6.42E+28	1.67E+29	1.90E+29	2.70E+29	1.35E+29
OV-OP RB-86	1.82E+06	9.40E+06	4.86E+06	3.15E+06	1.88E+06	1.88E+06	1.89E+06	1.90E+06	1.89E+06	1.85E+06
OV-PO RB-86	0.00E+00	0.00E+00	0.00E+00	0.00E+00	0.00E+00	0.00E+00	0.00E+00	0.00E+00	0.00E+00	0.00E+00
OV-OP SR-85	7.50E+05	6.77E+05	2.47E+05	5.16E+05	7.15E+05	7.64E+05	6.48E+05	6.18E+05	6.11E+05	5.04E+05
OV-PO SR-85	0.00E+00	0.00E+00	0.00E+00	0.00E+00	0.00E+00	0.00E+00	0.00E+00	0.00E+00	0.00E+00	0.00E+00
OV-OP SR-89	5.26E+07	9.51E+05	2.15E+04	4.86E+06	5.44E+07	5.44E+07	9.05E+06	4.40E+06	5.42E+07	2.58E+05
OV-PO SR-89	0.00E+00	0.00E+00	0.00E+00	0.00E+00	0.00E+00	0.00E+00	0.00E+00	0.00E+00	0.00E+00	0.00E+00
OV-OP SR-90	4.42E+05	1.71E+05	1.56E+03	2.98E+04	4.98E+05	5.23E+05	6.95E+03	3.48E+03	4.98E+05	1.32E+04
OV-PO SR-90	1.00E+03	3.87E+02	3.53E+00	6.75E+01	1.13E+03	1.18E+03	1.58E+01	7.88E+00	1.13E+03	3.00E+01
OV-OP ZR-95	4.36E+05	3.86E+05	5.82E+04	4.04E+05	4.50E+05	4.86E+05	4.12E+05	4.02E+05	3.86E+05	2.38E+05
OV-PO ZR-95	0.00E+00	0.00E+00	0.00E+00	0.00E+00	0.00E+00	0.00E+00	0.00E+00	0.00E+00	0.00E+00	0.00E+00
OV-OP NB-94	2.61E+03	7.13E+02	4.64E+01	2.94E+02	7.83E+02	1.77E+03	7.38E+02	7.10E+02	3.10E+03	2.94E+02
OV-PO NB-94	2.82E+00	7.71E-01	5.02E-02	3.18E-01	8.46E-01	1.92E+00	7.98E-01	7.67E-01	3.36E+00	3.18E-01
OV-OP NB-95	7.00E+04	3.86E+04	2.94E+03	7.15E+04	7.30E+04	1.07E+05	5.61E+04	1.01E+05	2.63E+05	1.61E+04
OV-PO NB-95	0.00E+00	0.00E+00	0.00E+00	0.00E+00	0.00E+00	0.00E+00	0.00E+00	0.00E+00	0.00E+00	0.00E+00
OV-OP MO-99	1.82E+05	6.82E+04	3.58E+03	1.44E+05	1.14E+05	9.08E+04	1.68E+05	1.62E+05	1.53E+05	3.09E+04
OV-PO MO-99	0.00E+00	0.00E+00	0.00E+00	0.00E+00	0.00E+00	0.00E+00	0.00E+00	0.00E+00	0.00E+00	0.00E+00
OV-OP TC-99	1.26E+04	4.31E+03	1.25E+03	1.87E+04	8.75E+03	6.38E+03	1.24E+04	9.77E+03	2.84E+02	3.93E+03
OV-PO TC-99	1.36E+01	4.65E+00	1.35E+00	2.02E+01	9.45E+00	6.89E+00	1.34E+01	1.06E+01	3.07E-01	4.24E+00
OV-OP TC-99M	2.24E+05	1.96E+05	2.21E+05	2.24E+05	2.57E+05	2.57E+05	2.58E+05	1.59E+05	1.23E+05	2.00E+05
OV-PO TC-99M	0.00E+00	0.00E+00	0.00E+00	0.00E+00	0.00E+00	0.00E+00	0.00E+00	0.00E+00	0.00E+00	0.00E+00
OV-OP RU-103	2.29E+04	1.76E+04	9.48E+02	2.62E+04	2.73E+04	2.98E++04	2.34E+04	2.96E+04	3.50E+04	6.68E+03

OV-PO	RU-103	0.00E+00	0.00E+00	0.00E+00	0.00E+00	0.00E+00	0.00E+00	0.00E+00	0.00E+00	0.00E+00	0.00E+00	0.00E+00
OV-OP	RU-106	1.33E+03	1.76E+03	4.42E+01	1.89E+03	1.37E+03	1.37E+03	1.36E+03	1.18E+03	1.40E+03	3.97E+02	
OV-PO	RU-106	1.24E+09	1.65E+09	4.14E+07	1.77E+09	1.28E+09	1.28E+09	1.27E+09	1.11E+09	1.31E+09	3.72E+08	
OV-OP	AQ-108	1.50E+06	1.31E+06	3.60E+05	8.70E+05	1.25E+06	3.91E+05	1.44E+06	1.50E+06	1.54E+06	8.70E+05	
OV-PO	AQ-108	1.05E+05	9.13E+04	2.52E+04	6.08E+04	8.76E+04	2.73E+04	1.00E+05	1.05E+05	1.08E+05	6.08E+04	
OV-OP	AQ-110	4.33E+06	3.81E+06	1.13E+06	2.62E+06	3.66E+06	1.35E+06	4.16E+06	4.43E+06	4.33E+06	2.62E+06	
OV-PO	AQ-110	3.93E+16	3.46E+16	1.03E+16	2.38E+16	3.32E+16	1.22E+16	3.77E+16	4.02E+16	3.93E+16	2.38E+16	
OV-OP	CD-109	3.18E+05	2.48E+05	2.20E+04	2.06E+04	2.49E+03	1.38E+04	2.74E+05	3.06E+05	3.61E+05	2.87E+04	
OV-PO	CD-109	6.60E+09	5.14E+09	4.56E+08	4.28E+08	5.17E+07	2.86E+08	5.68E+09	6.35E+09	7.48E+09	5.95E+08	
OV-OP	SN-113	5.72E+07	2.52E+07	6.31E+05	5.58E+06	4.32E+07	4.97E+07	2.08E+07	1.62E+07	4.97E+07	5.58E+06	
OV-PO	SN-113	0.00E+00	0.00E+00	0.00E+00	0.00E+00	0.00E+00	0.00E+00	0.00E+00	0.00E+00	0.00E+00	0.00E+00	
OV-OP	SN-126	1.75E+05	1.12E+05	6.43E+03	4.46E+04	1.56E+05	1.73E+05	7.54E+04	4.56E+04	1.55E+05	4.46E+04	
OV-PO	SN-126	1.89E+02	1.21E+02	6.94E+00	4.82E+01	1.69E+02	1.87E+02	8.14E+01	4.93E+01	1.67E+02	4.82E+01	
OV-OP	SB-124	1.35E+07	1.11E+07	1.60E+06	7.01E+06	1.28E+07	1.36E+07	1.20E+07	1.19E+07	1.11E+07	7.01E+06	
OV-PO	SB-124	0.00E+00	0.00E+00	0.00E+00	0.00E+00	0.00E+00	0.00E+00	0.00E+00	0.00E+00	0.00E+00	0.00E+00	
OV-OP	SB-125	1.24E+07	1.01E+07	1.38E+06	6.02E+06	1.17E+07	1.26E+07	1.09E+07	9.62E+06	9.82E+06	6.02E+06	
OV-PO	SB-125	2.91E+07	2.36E+07	3.24E+06	1.41E+07	2.73E+07	2.94E+07	2.55E+07	2.25E+07	2.30E+07	1.41E+07	
OV-OP	I-125	7.83E+05	5.60E+05	1.12E+06	2.94E+03	8.16E+05	1.08E+06	6.02E+05	4.73E+05	1.30E+02	4.27E+03	
OV-PO	I-125	0.00E+00	0.00E+00	0.00E+00	0.00E+00	0.00E+00	0.00E+00	0.00E+00	0.00E+00	0.00E+00	0.00E+00	
OV-OP	I-129	9.51E+03	6.91E+04	8.08E+04	2.54E+03	1.05E+04	1.09E+04	8.68E+03	8.53E+03	1.07E+00	3.57E+01	
OV-PO	I-129	1.03E+01	7.47E+01	8.73E+01	2.75E+00	1.13E+01	1.17E+01	9.37E+00	9.21E+00	1.16E-03	3.86E-02	
OV-OP	I-131	7.23E+04	8.85E+04	9.34E+04	5.50E+04	7.88E+04	8.16E+04	7.38E+04	6.05E+04	9.28E+01	2.95E+03	
OV-PO	I-131	0.00E+00	0.00E+00	0.00E+00	0.00E+00	0.00E+00	0.00E+00	0.00E+00	0.00E+00	0.00E+00	0.00E+00	
OV-OP	CS-134	6.20E+04	1.93E+05	1.69E+05	1.42E+05	9.84E+04	9.84E+04	1.06E+05	1.10E+05	1.24E+05	8.79E+04	
OV-PO	CS-134	1.70E+06	5.29E+06	4.62E+06	3.89E+06	2.69E+06	2.69E+06	2.90E+06	3.02E+06	3.40E+06	2.40E+06	
OV-OP	CS-135	1.60E+05	7.48E+06	3.36E+06	2.72E+05	1.60E+05	1.60E+05	1.60E+05	1.38E+05	1.59E+05	1.59E+05	
OV-PO	CS-135	1.73E+02	8.08E+03	3.62E+03	2.93E+02	1.73E+02	1.73E+02	1.73E+02	1.49E+02	1.72E+02	1.72E+02	
OV-OP	CS-136	1.43E+06	3.12E+06	2.72E+06	2.85E+06	2.16E+06	2.13E+06	2.33E+06	2.46E+06	2.61E+06	2.02E+06	
OV-PO	CS-136	0.00E+00	0.00E+00	0.00E+00	0.00E+00	0.00E+00	0.00E+00	0.00E+00	0.00E+00	0.00E+00	0.00E+00	
OV-OP	CS-137	2.14E+04	9.56E+04	8.10E+04	4.32E+04	2.76E+04	2.72E+04	2.89E+04	2.67E+04	3.16E+04	2.61E+04	
OV-PO	CS-137	4.63E+01	2.06E+02	1.75E+02	9.33E+01	5.97E+01	5.87E+01	6.25E+01	5.77E+01	6.83E+01	5.63E+01	
OV-OP	BA-140	1.09E+08	7.30E+07	2.37E+06	9.59E+07	1.29E+08	1.44E+08	9.08E+07	8.53E+07	1.19E+08	2.17E+07	
OV-PO	BA-140	0.00E+00	0.00E+00	0.00E+00	0.00E+00	0.00E+00	0.00E+00	0.00E+00	0.00E+00	0.00E+00	0.00E+00	
OV-OP	LA-140	1.56E+07	1.32E+07	2.57E+06	1.46E+07	1.57E+07	1.69E+07	1.53E+07	1.51E+07	1.36E+07	9.34E+06	
OV-PO	LA-140	0.00E+00	0.00E+00	0.00E+00	0.00E+00	0.00E+00	0.00E+00	0.00E+00	0.00E+00	0.00E+00	0.00E+00	
OV-OP	CE-141	9.65E+07	3.90E+07	1.47E+06	7.16E+07	1.01E+08	1.08E+08	9.13E+07	6.49E+07	7.70E+07	1.40E+07	
OV-PO	CE-141	0.00E+00	0.00E+00	0.00E+00	0.00E+00	0.00E+00	0.00E+00	0.00E+00	0.00E+00	0.00E+00	0.00E+00	
OV-OP	CE-144	7.90E+07	1.20E+07	6.50E+05	4.26E+07	6.52E+07	7.77E+07	6.86E+07	5.00E+07	6.54E+07	1.32E+06	
OV-PO	CE-144	3.46E+16	5.28E+15	2.85E+14	1.87E+16	2.86E+16	3.41E+16	3.01E+16	2.19E+16	2.87E+16	5.78E+14	
OV-OP	EU-152	2.25E+06	1.94E+06	3.45E+05	1.17E+06	2.00E+06	8.90E+05	1.62E+06	1.03E+06	1.98E+06	1.17E+06	
OV-PO	EU-152	1.25E+04	1.08E+04	1.92E+03	6.49E+03	1.11E+04	4.94E+03	9.02E+03	5.73E+03	1.10E+04	6.49E+03	
OV-OP	EU-154	1.94E+06	1.54E+06	1.84E+05	8.26E+05	1.73E+06	6.84E+05	1.28E+06	5.69E+05	1.69E+06	8.26E+05	
OV-PO	EU-154	7.67E+03	6.09E+03	7.28E+02	3.27E+03	6.86E+03	2.71E+03	5.07E+03	2.25E+03	6.69E+03	3.27E+03	
OV-OP	YB-169	1.13E+08	7.77E+07	6.66E+06	3.70E+07	1.04E+08	1.16E+08	9.75E+07	6.42E+07	7.88E+07	3.92E+07	
OV-PO	YB-169	0.00E+00	0.00E+00	0.00E+00	0.00E+00	0.00E+00	0.00E+00	0.00E+00	0.00E+00	0.00E+00	0.00E+00	
OV-OP	PB-210	1.28E+03	1.89E+06	1.89E+04	2.25E+02	4.08E+02	2.74E+02	3.83E+02	3.99E+01	1.28E+03	4.93E+02	
OV-PO	PB-210	3.83E+00	5.67E+03	5.65E+01	6.75E-01	1.22E+00	8.20E-01	1.15E+00	1.20E-01	3.83E+00	1.48E+00	
OV-OP	PO-210	1.60E+03	1.84E+05	4.63E+03	2.03E+03	8.97E+01	5.21E+02	1.54E+03	3.47E+03	1.60E+03	4.09E+02	
OV-PO	PO-210	1.21E+24	1.38E+26	3.48E+24	1.53E+24	6.74E+22	3.92E+23	1.16E+24	2.61E+24	1.21E+24	3.07E+23	
OV-OP	RN-222	9.26E+02	1.00E+03	1.01E+03	8.71E+02	9.34E+02	9.83E+02	9.14E+02	8.38E+02	7.49E+02	8.71E+02	
OV-PO	RN-222	0.00E+00	0.00E+00	0.00E+00	0.00E+00	0.00E+00	0.00E+00	0.00E+00	0.00E+00	0.00E+00	0.00E+00	
OV-OP	RA-226	4.73E+02	9.99E+03	8.24E+02	8.50E+01	4.73E+02	4.74E+02	1.31E+02	1.45E+01	4.68E+02	2.07E+02	
OV-PO	RA-226	5.17E-01	1.09E+01	9.01E-01	9.30E-02	5.18E-01	5.19E-01	1.43E-01	1.59E-02	5.12E-01	2.26E-01	
OV-OP	RA-228	1.57E+03	8.86E+04	8.52E+03	3.81E+02	1.61E+03	1.61E+03	4.98E+02	6.64E+01	1.60E+03	8.19E+02	
OV-PO	RA-228	3.72E+01	2.10E+03	2.02E+02	9.05E+00	3.81E+01	3.81E+01	1.18E+01	1.57E+00	3.80E+01	1.94E+01	
OV-OP	AC-227	1.49E+03	1.16E+05	6.52E+03	1.30E+02	8.42E+01	1.05E+01	1.69E+01	1.69E+00	1.51E+03	3.05E+01	
OV-PO	AC-227	4.21E+00	3.27E+02	1.84E+01	3.66E-01	2.38E-01	2.98E-02	4.77E-02	4.77E-03	4.27E+00	8.64E-02	
OV-OP	TH-228	5.70E+04	7.40E+04	3.63E+03	2.98E+04	6.23E+04	4.15E+04	4.43E+03	4.30E+02	5.56E+04	7.65E+03	
OV-PO	TH-228	3.30E+06	4.29E+06	2.10E+05	1.72E+06	3.61E+06	2.41E+06	2.57E+05	2.49E+04	3.22E+06	4.43E+05	
OV-OP	TH-229	9.96E+03	1.69E+04	1.31E+03	1.19E+03	1.28E+04	5.94E+03	1.11E+02	9.10E+00	1.11E+04	2.23E+02	
OV-PO	TH-229	1.08E+01	1.83E+01	1.42E+00	1.29E+00	1.39E+01	6.44E+00	1.21E-01	9.86E-03	1.20E+01	2.42E-01	
OV-OP	TH-230	4.16E+04	7.21E+04	1.62E+03	3.14E+03	6.73E+04	1.33E+04	2.90E+02	1.82E+01	6.36E+04	4.61E+02	
OV-PO	TH-230	4.49E+01	7.79E+01	1.75E+00	3.39E+00	7.28E+01	1.44E+01	3.14E-01	1.96E-02	6.88E+01	4.98E-01	

000547

INVIMPS Example 1 Utility Output (Continued)

OV-OP	TH-232	4.80E+04	8.39E+04	1.94E+03	3.02E+03	7.76E+04	1.55E+04	2.65E+02	1.62E+01	7.38E+04	4.20E+02
OV-PO	TH-232	5.19E+01	9.07E+01	2.10E+00	3.26E+00	8.38E+01	1.67E+01	2.86E-01	1.75E-02	7.97E+01	4.54E-01
OV-OP	PA-231	5.26E+02	2.44E+04	6.13E+02	5.54E+01	3.23E+01	4.16E+00	7.76E+00	6.54E-01	5.29E+02	1.22E+01
OV-PO	PA-231	5.69E-01	2.64E+01	6.62E-01	5.99E-02	3.49E-02	4.49E-03	8.39E-03	7.07E-04	5.72E-01	1.32E-02
OV-OP	U-232	2.00E+06	2.55E+06	5.94E+04	1.41E+05	9.14E+04	1.01E+07	1.67E+04	1.52E+03	9.72E+06	3.43E+04
OV-PO	U-232	2.88E+03	3.67E+03	8.56E+01	2.03E+02	1.32E+02	1.46E+04	2.41E+01	2.19E+00	1.40E+04	4.94E+01
OV-OP	U-233	3.08E+06	2.60E+06	6.05E+04	4.52E+05	1.61E+05	1.79E+07	1.13E+06	7.78E+04	1.70E+07	4.21E+05
OV-PO	U-233	3.33E+03	2.81E+03	6.53E+01	4.88E+02	1.73E+02	1.94E+04	1.22E+03	8.40E+01	1.83E+04	4.54E+02
OV-OP	U-234	3.10E+06	2.59E+06	6.01E+04	4.53E+05	1.62E+05	1.71E+07	1.16E+06	7.73E+04	1.71E+07	4.21E+05
OV-PO	U-234	3.39E+03	2.80E+03	6.49E+01	4.89E+02	1.75E+02	1.85E+04	1.25E+03	8.35E+01	1.84E+04	4.55E+02
OV-OP	U-235	2.45E+06	2.13E+06	5.68E+04	4.72E+05	1.76E+05	6.53E+06	1.28E+06	8.92E+04	5.05E+06	4.14E+05
OV-PO	U-235	2.65E+03	2.30E+03	6.14E+01	5.10E+02	1.90E+02	7.06E+03	1.39E+03	9.63E+01	5.46E+03	4.47E+02
OV-OP	U-236	3.30E+06	2.77E+06	6.39E+04	4.83E+05	1.72E+05	1.82E+07	1.35E+06	8.35E+04	1.82E+07	4.51E+05
OV-PO	U-236	3.56E+03	2.99E+03	6.90E+01	5.21E+02	1.86E+02	1.97E+04	1.46E+03	9.02E+01	1.97E+04	4.88E+02
OV-OP	U-238	6.61E+05	6.80E+05	5.96E+04	3.06E+05	1.49E+05	8.36E+05	9.18E+05	8.67E+04	6.24E+05	2.92E+05
OV-PO	U-238	7.14E+02	7.34E+02	6.44E+01	3.30E+02	1.61E+02	9.02E+02	9.60E+02	9.36E+01	6.74E+02	3.16E+02
OV-OP	NP-237	1.90E+04	3.59E+05	1.17E+04	2.36E+03	1.12E+03	1.48E+02	3.87E+02	2.72E+01	1.94E+04	5.04E+02
OV-PO	NP-237	2.06E+01	3.88E+02	1.27E+01	2.55E+00	1.21E+00	1.60E-01	4.18E-01	2.93E-02	2.09E+01	5.44E-01
OV-OP	PU-236	4.64E+06	2.47E+06	5.57E+04	2.70E+06	1.50E+06	1.94E+05	5.87E+05	5.09E+04	3.17E+07	3.66E+05
OV-PO	PU-236	7.34E+06	3.91E+06	8.82E+04	4.27E+06	2.38E+06	3.08E+05	9.29E+05	8.05E+04	5.01E+07	5.79E+05
OV-OP	PU-238	4.81E+05	6.45E+05	1.45E+04	1.06E+05	5.27E+04	6.85E+03	1.77E+04	1.44E+03	9.33E+05	2.19E+04
OV-PO	PU-238	6.61E+02	8.87E+02	1.99E+01	1.46E+02	7.24E+01	9.42E+00	2.44E+01	1.97E+00	1.28E+03	3.01E+01
OV-OP	PU-239	4.29E+05	6.37E+05	1.41E+04	8.91E+04	4.42E+04	5.70E+03	1.47E+04	1.08E+03	7.70E+05	1.77E+04
OV-PO	PU-239	4.63E+02	6.89E+02	1.52E+01	9.63E+01	4.77E+01	6.17E+00	1.59E+01	1.16E+00	8.32E+02	1.92E+01
OV-OP	PU-240	4.30E+05	6.39E+05	1.41E+04	8.92E+04	4.43E+04	5.72E+03	1.47E+04	1.08E+03	7.73E+05	1.78E+04
OV-PO	PU-240	4.66E+02	6.92E+02	1.53E+01	9.67E+01	4.80E+01	6.19E+00	1.60E+01	1.17E+00	8.38E+02	1.93E+01
OV-OP	PU-241	5.50E+07	1.99E+08	4.47E+06	7.10E+06	3.58E+06	4.63E+05	1.14E+06	9.11E+04	5.86E+07	1.58E+06
OV-PO	PU-241	2.87E+05	1.04E+06	2.33E+04	3.70E+04	1.87E+04	2.42E+03	5.94E+03	4.75E+02	3.06E+05	8.22E+03
OV-OP	PU-242	4.56E+05	6.76E+05	1.50E+04	9.45E+04	4.70E+04	6.01E+03	1.57E+04	1.09E+03	8.18E+05	1.84E+04
OV-PO	PU-242	4.93E+02	7.30E+02	1.62E+01	1.02E+02	5.08E+01	6.49E+00	1.69E+01	1.17E+00	8.84E+02	1.99E+01
OV-OP	PU-244	3.26E+05	4.22E+05	9.34E+03	8.60E+04	4.50E+04	6.05E+03	1.62E+04	1.07E+03	4.56E+05	1.70E+04
OV-PO	PU-244	3.52E+02	4.56E+02	1.01E+01	9.29E+01	4.86E+01	6.54E+00	1.75E+01	1.16E+00	4.92E+02	1.83E+01
OV-OP	AM-241	1.61E+03	4.00E+04	9.38E+02	1.97E+02	8.95E+01	1.16E+01	3.08E+01	2.46E+00	1.64E+03	4.29E+01
OV-PO	AM-241	1.82E+00	4.52E+01	1.06E+00	2.22E-01	1.01E-01	1.31E-02	3.48E-02	2.78E-03	1.85E+00	4.85E-02
OV-OP	AM-243	1.46E+03	3.15E+04	8.80E+02	1.94E+02	8.83E+01	1.14E+01	3.04E+01	2.29E+00	1.48E+03	4.11E+01
OV-PO	AM-243	1.59E+00	3.42E+01	9.53E-01	2.10E-01	9.56E-02	1.24E-02	3.29E-02	2.48E-03	1.60E+00	4.45E-02
OV-OP	CM-242	1.07E+07	7.03E+06	1.61E+05	1.43E+06	6.46E+05	8.39E+04	2.64E+05	2.46E+04	1.36E+07	3.13E+05
OV-PO	CM-242	2.45E+24	1.61E+24	3.66E+22	3.26E+23	1.47E+23	1.92E+22	6.02E+22	5.62E+21	3.10E+24	7.14E+22
OV-OP	CM-243	3.30E+04	4.34E+05	1.14E+04	4.01E+03	1.90E+03	2.37E+02	6.78E+02	5.94E+01	3.43E+04	9.76E+02
OV-PO	CM-243	6.84E+01	8.99E+02	2.36E+01	8.30E+00	3.93E+00	4.92E-01	1.40E+00	1.23E-01	7.10E+01	2.02E+00
OV-OP	CM-244	4.98E+04	6.68E+05	1.51E+04	5.91E+03	2.76E+03	3.56E+02	1.00E+03	8.72E+01	5.18E+04	1.43E+03
OV-PO	CM-244	1.73E+02	2.35E+03	5.30E+01	2.08E+01	9.72E+00	1.25E+00	3.53E+00	3.07E-01	1.82E+02	5.05E+00
OV-OP	CM-248	4.02E+03	3.04E+04	2.16E+03	5.93E+02	2.93E+02	3.76E+01	3.89E+02	2.69E+01	4.94E+03	2.72E+02
OV-PO	CM-248	4.34E+00	3.28E+01	2.33E+00	6.40E-01	3.16E-01	4.06E-02	4.20E-01	2.91E-02	5.33E+00	2.94E-01
OV-OP	CF-252	3.38E+04	5.86E+04	2.16E+03	5.35E+03	2.37E+03	3.08E+02	1.89E+03	1.78E+02	4.90E+04	1.83E+03
OV-PO	CF-252	9.45E+04	1.64E+05	6.04E+03	1.50E+04	6.62E+03	8.61E+02	5.30E+03	4.99E+02	1.37E+05	5.17E+03

GROUNDWATER LIMITS FOR ISTR= 1

I-WL	H-3	1.12E+05	8.70E+04	6.57E+04	1.13E+05	1.10E+05	1.14E+05	1.14E+05	1.43E+05	1.14E+05	1.05E+05	
P-WL	H-3	1.00E+20	1.00E+20	1.00E+20	1.00E+20	1.00E+20	1.00E+20	1.00E+20	1.00E+20	1.00E+20	1.00E+20	
P-SW	H-3	1.00E+20	1.00E+20	1.00E+20	1.00E+20	1.00E+20	1.00E+20	1.00E+20	1.00E+20	1.00E+20	1.00E+20	
I-WL	C-14	3.70E+03	2.60E+03	2.15E+03	1.64E+03	2.96E+03	2.55E+03	9.30E+02	4.46E+02	3.53E+03	2.04E+03	
P-WL	C-14	6.33E+04	4.44E+04	3.68E+04	2.80E+04	5.07E+04	4.37E+04	1.59E+04	7.62E+03	6.04E+04	3.49E+04	
P-SW	C-14	2.43E+06	1.71E+06	1.41E+06	1.08E+06	1.95E+06	1.68E+06	6.11E+05	2.93E+05	2.32E+06	1.34E+06	
I-WL	NA-22	1.00E+20	1.00E+20	1.00E+20	1.00E+20	1.00E+20	1.00E+20	1.00E+20	1.00E+20	1.00E+20	1.00E+20	
P-WL	NA-22	1.00E+20	1.00E+20	1.00E+20	1.00E+20	1.00E+20	1.00E+20	1.00E+20	1.00E+20	1.00E+20	1.00E+20	
P-SW	NA-22	1.00E+20	1.00E+20	1.00E+20	1.00E+20	1.00E+20	1.00E+20	1.00E+20	1.00E+20	1.00E+20	1.00E+20	
I-WL	P-32	1.00E+20	1.00E+20	1.00E+20	1.00E+20	1.00E+20	1.00E+20	1.00E+20	1.00E+20	1.00E+20	1.00E+20	
P-WL	P-32	1.00E+20	1.00E+20	1.00E+20	1.00E+20	1.00E+20	1.00E+20	1.00E+20	1.00E+20	1.00E+20	1.00E+20	
P-SW	P-32	1.00E+20	1.00E+20	1.00E+20	1.00E+20	1.00E+20	1.00E+20	1.00E+20	1.00E+20	1.00E+20	1.00E+20	
I-WL	P-33	1.00E+20	1.00E+20	1.00E+20	1.00E+20	1.00E+20	1.00E+20	1.00E+20	1.00E+20	1.00E+20	1.00E+20	
P-WL	P-33	1.00E+20	1.00E+20	1.00E+20	1.00E+20	1.00E+20	1.00E+20	1.00E+20	1.00E+20	1.00E+20	1.00E+20	
P-SW	P-33	1.00E+20	1.00E+20	1.00E+20	1.00E+20	1.00E+20	1.00E+20	1.00E+20	1.00E+20	1.00E+20	1.00E+20	
I-WL	S-35	1.00E+20	1.00E+20	1.00E+20	1.00E+20	1.00E+20	1.00E+20	1.00E+20	1.00E+20	1.00E+20	1.00E+20	
P-WL	S-35	1.00E+20	1.00E+20	1.00E+20	1.00E+20	1.00E+20	1.00E+20	1.00E+20	1.00E+20	1.00E+20	1.00E+20	
P-SW	S-35	1.00E+20	1.00E+20	1.00E+20	1.00E+20	1.00E+20	1.00E+20	1.00E+20	1.00E+20	1.00E+20	1.00E+20	
I-WL	CL-36	1.40E+01	1.01E+01	1.40E+01	1.35E+01	1.40E+01	1.40E+01	1.40E+01	1.40E+01	1.40E+01	1.37E+01	
P-WL	CL-36	1.68E+02	1.21E+02	1.68E+02	1.63E+02	1.68E+02	1.68E+02	1.68E+02	1.68E+02	1.68E+02	1.64E+02	
P-SW	CL-36	3.77E+03	2.71E+03	3.77E+03	3.64E+03	3.77E+03	3.77E+03	3.77E+03	3.77E+03	3.77E+03	3.68E+03	
I-WL	CA-45	1.00E+20	1.00E+20	1.00E+20	1.00E+20	1.00E+20	1.00E+20	1.00E+20	1.00E+20	1.00E+20	1.00E+20	
P-WL	CA-45	1.00E+20	1.00E+20	1.00E+20	1.00E+20	1.00E+20	1.00E+20	1.00E+20	1.00E+20	1.00E+20	1.00E+20	
P-SW	CA-45	1.00E+20	1.00E+20	1.00E+20	1.00E+20	1.00E+20	1.00E+20	1.00E+20	1.00E+20	1.00E+20	1.00E+20	
I-WL	SC-46	1.00E+20	1.00E+20	1.00E+20	1.00E+20	1.00E+20	1.00E+20	1.00E+20	1.00E+20	1.00E+20	1.00E+20	
P-WL	SC-46	1.00E+20	1.00E+20	1.00E+20	1.00E+20	1.00E+20	1.00E+20	1.00E+20	1.00E+20	1.00E+20	1.00E+20	
P-SW	SC-46	1.00E+20	1.00E+20	1.00E+20	1.00E+20	1.00E+20	1.00E+20	1.00E+20	1.00E+20	1.00E+20	1.00E+20	
I-WL	CR-51	1.00E+20	1.00E+20	1.00E+20	1.00E+20	1.00E+20	1.00E+20	1.00E+20	1.00E+20	1.00E+20	1.00E+20	
P-WL	CR-51	1.00E+20	1.00E+20	1.00E+20	1.00E+20	1.00E+20	1.00E+20	1.00E+20	1.00E+20	1.00E+20	1.00E+20	
P-SW	CR-51	1.00E+20	1.00E+20	1.00E+20	1.00E+20	1.00E+20	1.00E+20	1.00E+20	1.00E+20	1.00E+20	1.00E+20	
I-WL	MN-54	1.00E+20	1.00E+20	1.00E+20	1.00E+20	1.00E+20	1.00E+20	1.00E+20	1.00E+20	1.00E+20	1.00E+20	
P-WL	MN-54	1.00E+20	1.00E+20	1.00E+20	1.00E+20	1.00E+20	1.00E+20	1.00E+20	1.00E+20	1.00E+20	1.00E+20	
P-SW	MN-54	1.00E+20	1.00E+20	1.00E+20	1.00E+20	1.00E+20	1.00E+20	1.00E+20	1.00E+20	1.00E+20	1.00E+20	
I-WL	FE-55	1.00E+20	1.00E+20	1.00E+20	1.00E+20	1.00E+20	1.00E+20	1.00E+20	1.00E+20	1.00E+20	1.00E+20	
P-WL	FE-55	1.00E+20	1.00E+20	1.00E+20	1.00E+20	1.00E+20	1.00E+20	1.00E+20	1.00E+20	1.00E+20	1.00E+20	
P-SW	FE-55	1.00E+20	1.00E+20	1.00E+20	1.00E+20	1.00E+20	1.00E+20	1.00E+20	1.00E+20	1.00E+20	1.00E+20	
I-WL	FE-59	1.00E+20	1.00E+20	1.00E+20	1.00E+20	1.00E+20	1.00E+20	1.00E+20	1.00E+20	1.00E+20	1.00E+20	
P-WL	FE-59	1.00E+20	1.00E+20	1.00E+20	1.00E+20	1.00E+20	1.00E+20	1.00E+20	1.00E+20	1.00E+20	1.00E+20	
P-SW	FE-59	1.00E+20	1.00E+20	1.00E+20	1.00E+20	1.00E+20	1.00E+20	1.00E+20	1.00E+20	1.00E+20	1.00E+20	
I-WL	CO-57	1.00E+20	1.00E+20	1.00E+20	1.00E+20	1.00E+20	1.00E+20	1.00E+20	1.00E+20	1.00E+20	1.00E+20	
P-WL	CO-57	1.00E+20	1.00E+20	1.00E+20	1.00E+20	1.00E+20	1.00E+20	1.00E+20	1.00E+20	1.00E+20	1.00E+20	
P-SW	CO-57	1.00E+20	1.00E+20	1.00E+20	1.00E+20	1.00E+20	1.00E+20	1.00E+20	1.00E+20	1.00E+20	1.00E+20	
I-WL	CO-58	1.00E+20	1.00E+20	1.00E+20	1.00E+20	1.00E+20	1.00E+20	1.00E+20	1.00E+20	1.00E+20	1.00E+20	
P-WL	CO-58	1.00E+20	1.00E+20	1.00E+20	1.00E+20	1.00E+20	1.00E+20	1.00E+20	1.00E+20	1.00E+20	1.00E+20	
P-SW	CO-58	1.00E+20	1.00E+20	1.00E+20	1.00E+20	1.00E+20	1.00E+20	1.00E+20	1.00E+20	1.00E+20	1.00E+20	
I-WL	CO-60	1.00E+20	1.00E+20	1.00E+20	1.00E+20	1.00E+20	1.00E+20	1.00E+20	1.00E+20	1.00E+20	1.00E+20	
P-WL	CO-60	1.00E+20	1.00E+20	1.00E+20	1.00E+20	1.00E+20	1.00E+20	1.00E+20	1.00E+20	1.00E+20	1.00E+20	
P-SW	CO-60	1.00E+20	1.00E+20	1.00E+20	1.00E+20	1.00E+20	1.00E+20	1.00E+20	1.00E+20	1.00E+20	1.00E+20	
I-WL	NI-59	7.54E+05	6.46E+05	9.83E+04	4.63E+05	7.44E+05	7.44E+05	7.27E+05	7.31E+05	6.81E+05	4.63E+05	
P-WL	NI-59	1.00E+20	1.00E+20	1.00E+20	1.00E+20	1.00E+20	1.00E+20	1.00E+20	1.00E+20	1.00E+20	1.00E+20	
P-SW	NI-59	1.00E+20	1.00E+20	1.00E+20	1.00E+20	1.00E+20	1.00E+20	1.00E+20	1.00E+20	1.00E+20	1.00E+20	
I-WL	NI-63	1.00E+20	1.00E+20	1.00E+20	1.00E+20	1.00E+20	1.00E+20	1.00E+20	1.00E+20	1.00E+20	1.00E+20	
P-WL	NI-63	1.00E+20	1.00E+20	1.00E+20	1.00E+20	1.00E+20	1.00E+20	1.00E+20	1.00E+20	1.00E+20	1.00E+20	
P-SW	NI-63	1.00E+20	1.00E+20	1.00E+20	1.00E+20	1.00E+20	1.00E+20	1.00E+20	1.00E+20	1.00E+20	1.00E+20	
I-WL	ZN-65	1.00E+20	1.00E+20	1.00E+20	1.00E+20	1.00E+20	1.00E+20	1.00E+20	1.00E+20	1.00E+20	1.00E+20	
P-WL	ZN-65	1.00E+20	1.00E+20	1.00E+20	1.00E+20	1.00E+20	1.00E+20	1.00E+20	1.00E+20	1.00E+20	1.00E+20	
P-SW	ZN-65	1.00E+20	1.00E+20	1.00E+20	1.00E+20	1.00E+20	1.00E+20	1.00E+20	1.00E+20	1.00E+20	1.00E+20	
I-WL	SE-75	1.00E+20	1.00E+20	1.00E+20	1.00E+20	1.00E+20	1.00E+20	1.00E+20	1.00E+20	1.00E+20	1.00E+20	
P-WL	SE-75	1.00E+20	1.00E+20	1.00E+20	1.00E+20	1.00E+20	1.00E+20	1.00E+20	1.00E+20	1.00E+20	1.00E+20	
P-SW	SE-75	1.00E+20	1.00E+20	1.00E+20	1.00E+20	1.00E+20	1.00E+20	1.00E+20	1.00E+20	1.00E+20	1.00E+20	
I-WL	RB-86	1.00E+20	1.00E+20	1.00E+20	1.00E+20	1.00E+20	1.00E+20	1.00E+20	1.00E+20	1.00E+20	1.00E+20	

000549

P-WL	RB-86	1.00E+20	1.00E+20	1.00E+20	1.00E+20	1.00E+20	1.00E+20	1.00E+20	1.00E+20	1.00E+20	1.00E+20
P-SW	RB-86	1.00E+20	1.00E+20	1.00E+20	1.00E+20	1.00E+20	1.00E+20	1.00E+20	1.00E+20	1.00E+20	1.00E+20
I-WL	SR-85	1.00E+20	1.00E+20	1.00E+20	1.00E+20	1.00E+20	1.00E+20	1.00E+20	1.00E+20	1.00E+20	1.00E+20
P-WL	SR-85	1.00E+20	1.00E+20	1.00E+20	1.00E+20	1.00E+20	1.00E+20	1.00E+20	1.00E+20	1.00E+20	1.00E+20
P-SW	SR-85	1.00E+20	1.00E+20	1.00E+20	1.00E+20	1.00E+20	1.00E+20	1.00E+20	1.00E+20	1.00E+20	1.00E+20
I-WL	SR-89	1.00E+20	1.00E+20	1.00E+20	1.00E+20	1.00E+20	1.00E+20	1.00E+20	1.00E+20	1.00E+20	1.00E+20
P-WL	SR-89	1.00E+20	1.00E+20	1.00E+20	1.00E+20	1.00E+20	1.00E+20	1.00E+20	1.00E+20	1.00E+20	1.00E+20
P-SW	SR-89	1.00E+20	1.00E+20	1.00E+20	1.00E+20	1.00E+20	1.00E+20	1.00E+20	1.00E+20	1.00E+20	1.00E+20
I-WL	SR-90	6.83E+11	2.66E+11	2.43E+09	4.64E+10	7.77E+11	8.14E+11	1.08E+10	5.42E+09	7.77E+11	2.06E+10
P-WL	SR-90	1.00E+20	1.00E+20	1.00E+20	1.00E+20	1.00E+20	1.00E+20	1.00E+20	1.00E+20	1.00E+20	1.00E+20
P-SW	SR-90	1.00E+20	1.00E+20	1.00E+20	1.00E+20	1.00E+20	1.00E+20	1.00E+20	1.00E+20	1.00E+20	1.00E+20
I-WL	ZR-95	1.00E+20	1.00E+20	1.00E+20	1.00E+20	1.00E+20	1.00E+20	1.00E+20	1.00E+20	1.00E+20	1.00E+20
P-WL	ZR-95	1.00E+20	1.00E+20	1.00E+20	1.00E+20	1.00E+20	1.00E+20	1.00E+20	1.00E+20	1.00E+20	1.00E+20
P-SW	ZR-95	1.00E+20	1.00E+20	1.00E+20	1.00E+20	1.00E+20	1.00E+20	1.00E+20	1.00E+20	1.00E+20	1.00E+20
I-WL	NB-94	1.00E+20	1.00E+20	1.00E+20	1.00E+20	1.00E+20	1.00E+20	1.00E+20	1.00E+20	1.00E+20	1.00E+20
P-WL	NB-94	1.00E+20	1.00E+20	1.00E+20	1.00E+20	1.00E+20	1.00E+20	1.00E+20	1.00E+20	1.00E+20	1.00E+20
P-SW	NB-94	1.00E+20	1.00E+20	1.00E+20	1.00E+20	1.00E+20	1.00E+20	1.00E+20	1.00E+20	1.00E+20	1.00E+20
I-WL	NB-95	1.00E+20	1.00E+20	1.00E+20	1.00E+20	1.00E+20	1.00E+20	1.00E+20	1.00E+20	1.00E+20	1.00E+20
P-WL	NB-95	1.00E+20	1.00E+20	1.00E+20	1.00E+20	1.00E+20	1.00E+20	1.00E+20	1.00E+20	1.00E+20	1.00E+20
P-SW	NB-95	1.00E+20	1.00E+20	1.00E+20	1.00E+20	1.00E+20	1.00E+20	1.00E+20	1.00E+20	1.00E+20	1.00E+20
I-WL	MO-99	1.00E+20	1.00E+20	1.00E+20	1.00E+20	1.00E+20	1.00E+20	1.00E+20	1.00E+20	1.00E+20	1.00E+20
P-WL	MO-99	1.00E+20	1.00E+20	1.00E+20	1.00E+20	1.00E+20	1.00E+20	1.00E+20	1.00E+20	1.00E+20	1.00E+20
P-SW	MO-99	1.00E+20	1.00E+20	1.00E+20	1.00E+20	1.00E+20	1.00E+20	1.00E+20	1.00E+20	1.00E+20	1.00E+20
I-WL	TC-99	8.56E+02	2.92E+02	8.48E+01	1.27E+03	5.93E+02	4.32E+02	8.43E+02	6.62E+02	1.93E+01	2.66E+02
P-WL	TC-99	1.03E+04	3.52E+03	1.02E+03	1.53E+04	7.16E+03	5.22E+03	1.02E+04	8.00E+03	2.32E+02	3.21E+03
P-SW	TC-99	2.31E+05	7.86E+04	2.28E+04	3.42E+05	1.60E+05	1.16E+05	2.27E+05	1.78E+05	5.19E+03	7.17E+04
I-WL	TC-99M	1.00E+20	1.00E+20	1.00E+20	1.00E+20	1.00E+20	1.00E+20	1.00E+20	1.00E+20	1.00E+20	1.00E+20
P-WL	TC-99M	1.00E+20	1.00E+20	1.00E+20	1.00E+20	1.00E+20	1.00E+20	1.00E+20	1.00E+20	1.00E+20	1.00E+20
P-SW	TC-99M	1.00E+20	1.00E+20	1.00E+20	1.00E+20	1.00E+20	1.00E+20	1.00E+20	1.00E+20	1.00E+20	1.00E+20
I-WL	RU-103	1.00E+20	1.00E+20	1.00E+20	1.00E+20	1.00E+20	1.00E+20	1.00E+20	1.00E+20	1.00E+20	1.00E+20
P-WL	RU-103	1.00E+20	1.00E+20	1.00E+20	1.00E+20	1.00E+20	1.00E+20	1.00E+20	1.00E+20	1.00E+20	1.00E+20
P-SW	RU-103	1.00E+20	1.00E+20	1.00E+20	1.00E+20	1.00E+20	1.00E+20	1.00E+20	1.00E+20	1.00E+20	1.00E+20
I-WL	RU-106	1.00E+20	1.00E+20	1.00E+20	1.00E+20	1.00E+20	1.00E+20	1.00E+20	1.00E+20	1.00E+20	1.00E+20
P-WL	RU-106	1.00E+20	1.00E+20	1.00E+20	1.00E+20	1.00E+20	1.00E+20	1.00E+20	1.00E+20	1.00E+20	1.00E+20
P-SW	RU-106	1.00E+20	1.00E+20	1.00E+20	1.00E+20	1.00E+20	1.00E+20	1.00E+20	1.00E+20	1.00E+20	1.00E+20
I-WL	AG-108	1.00E+20	1.00E+20	1.00E+20	1.00E+20	1.00E+20	1.00E+20	1.00E+20	1.00E+20	1.00E+20	1.00E+20
P-WL	AG-108	1.00E+20	1.00E+20	1.00E+20	1.00E+20	1.00E+20	1.00E+20	1.00E+20	1.00E+20	1.00E+20	1.00E+20
P-SW	AG-108	1.00E+20	1.00E+20	1.00E+20	1.00E+20	1.00E+20	1.00E+20	1.00E+20	1.00E+20	1.00E+20	1.00E+20
I-WL	AG-110	1.00E+20	1.00E+20	1.00E+20	1.00E+20	1.00E+20	1.00E+20	1.00E+20	1.00E+20	1.00E+20	1.00E+20
P-WL	AG-110	1.00E+20	1.00E+20	1.00E+20	1.00E+20	1.00E+20	1.00E+20	1.00E+20	1.00E+20	1.00E+20	1.00E+20
P-SW	AG-110	1.00E+20	1.00E+20	1.00E+20	1.00E+20	1.00E+20	1.00E+20	1.00E+20	1.00E+20	1.00E+20	1.00E+20
I-WL	CD-109	1.00E+20	1.00E+20	1.00E+20	1.00E+20	1.00E+20	1.00E+20	1.00E+20	1.00E+20	1.00E+20	1.00E+20
P-WL	CD-109	1.00E+20	1.00E+20	1.00E+20	1.00E+20	1.00E+20	1.00E+20	1.00E+20	1.00E+20	1.00E+20	1.00E+20
P-SW	CD-109	1.00E+20	1.00E+20	1.00E+20	1.00E+20	1.00E+20	1.00E+20	1.00E+20	1.00E+20	1.00E+20	1.00E+20
I-WL	SN-113	1.00E+20	1.00E+20	1.00E+20	1.00E+20	1.00E+20	1.00E+20	1.00E+20	1.00E+20	1.00E+20	1.00E+20
P-WL	SN-113	1.00E+20	1.00E+20	1.00E+20	1.00E+20	1.00E+20	1.00E+20	1.00E+20	1.00E+20	1.00E+20	1.00E+20
P-SW	SN-113	1.00E+20	1.00E+20	1.00E+20	1.00E+20	1.00E+20	1.00E+20	1.00E+20	1.00E+20	1.00E+20	1.00E+20
I-WL	SN-126	5.84E+04	4.78E+04	4.45E+03	2.44E+04	5.59E+04	6.03E+04	3.60E+04	2.44E+04	4.87E+04	2.44E+04
P-WL	SN-126	1.00E+20	1.00E+20	1.00E+20	1.00E+20	1.00E+20	1.00E+20	1.00E+20	1.00E+20	1.00E+20	1.00E+20
P-SW	SN-126	1.00E+20	1.00E+20	1.00E+20	1.00E+20	1.00E+20	1.00E+20	1.00E+20	1.00E+20	1.00E+20	1.00E+20
I-WL	SB-124	1.00E+20	1.00E+20	1.00E+20	1.00E+20	1.00E+20	1.00E+20	1.00E+20	1.00E+20	1.00E+20	1.00E+20
P-WL	SB-124	1.00E+20	1.00E+20	1.00E+20	1.00E+20	1.00E+20	1.00E+20	1.00E+20	1.00E+20	1.00E+20	1.00E+20
P-SW	SB-124	1.00E+20	1.00E+20	1.00E+20	1.00E+20	1.00E+20	1.00E+20	1.00E+20	1.00E+20	1.00E+20	1.00E+20
I-WL	SB-125	1.00E+20	1.00E+20	1.00E+20	1.00E+20	1.00E+20	1.00E+20	1.00E+20	1.00E+20	1.00E+20	1.00E+20
P-WL	SB-125	1.00E+20	1.00E+20	1.00E+20	1.00E+20	1.00E+20	1.00E+20	1.00E+20	1.00E+20	1.00E+20	1.00E+20
P-SW	SB-125	1.00E+20	1.00E+20	1.00E+20	1.00E+20	1.00E+20	1.00E+20	1.00E+20	1.00E+20	1.00E+20	1.00E+20
I-WL	I-125	1.00E+20	1.00E+20	1.00E+20	1.00E+20	1.00E+20	1.00E+20	1.00E+20	1.00E+20	1.00E+20	1.00E+20
P-WL	I-125	1.00E+20	1.00E+20	1.00E+20	1.00E+20	1.00E+20	1.00E+20	1.00E+20	1.00E+20	1.00E+20	1.00E+20
P-SW	I-125	1.00E+20	1.00E+20	1.00E+20	1.00E+20	1.00E+20	1.00E+20	1.00E+20	1.00E+20	1.00E+20	1.00E+20
I-WL	I-129	6.47E+02	4.68E+03	5.47E+03	1.73E+02	7.12E+02	7.39E+02	5.91E+02	5.80E+02	7.31E-02	2.43E+00
P-WL	I-129	7.74E+03	5.60E+04	6.54E+04	2.07E+03	8.52E+03	8.85E+03	7.07E+03	6.94E+03	8.74E-01	2.91E+01
P-SW	I-129	1.71E+05	1.24E+06	1.45E+06	4.58E+04	1.89E+05	1.96E+05	1.56E+05	1.54E+05	1.93E+01	6.43E+02
I-WL	I-131	1.00E+20	1.00E+20	1.00E+20	1.00E+20	1.00E+20	1.00E+20	1.00E+20	1.00E+20	1.00E+20	1.00E+20

P-WL	I-131	1.00E+20	1.00E+20	1.00E+20	1.00E+20	1.00E+20	1.00E+20	1.00E+20	1.00E+20	1.00E+20	1.00E+20
P-SW	I-131	1.00E+20	1.00E+20	1.00E+20	1.00E+20	1.00E+20	1.00E+20	1.00E+20	1.00E+20	1.00E+20	1.00E+20
I-WL	CS-134	1.00E+20	1.00E+20	1.00E+20	1.00E+20	1.00E+20	1.00E+20	1.00E+20	1.00E+20	1.00E+20	1.00E+20
P-WL	CS-134	1.00E+20	1.00E+20	1.00E+20	1.00E+20	1.00E+20	1.00E+20	1.00E+20	1.00E+20	1.00E+20	1.00E+20
P-SW	CS-134	1.00E+20	1.00E+20	1.00E+20	1.00E+20	1.00E+20	1.00E+20	1.00E+20	1.00E+20	1.00E+20	1.00E+20
I-WL	CS-135	1.14E+05	5.31E+06	2.38E+06	1.93E+05	1.14E+05	1.14E+05	1.14E+05	9.81E+04	1.13E+05	1.13E+05
P-WL	CS-135	1.00E+20	1.00E+20	1.00E+20	1.00E+20	1.00E+20	1.00E+20	1.00E+20	1.00E+20	1.00E+20	1.00E+20
P-SW	CS-135	1.00E+20	1.00E+20	1.00E+20	1.00E+20	1.00E+20	1.00E+20	1.00E+20	1.00E+20	1.00E+20	1.00E+20
I-WL	CS-136	1.00E+20	1.00E+20	1.00E+20	1.00E+20	1.00E+20	1.00E+20	1.00E+20	1.00E+20	1.00E+20	1.00E+20
P-WL	CS-136	1.00E+20	1.00E+20	1.00E+20	1.00E+20	1.00E+20	1.00E+20	1.00E+20	1.00E+20	1.00E+20	1.00E+20
P-SW	CS-136	1.00E+20	1.00E+20	1.00E+20	1.00E+20	1.00E+20	1.00E+20	1.00E+20	1.00E+20	1.00E+20	1.00E+20
I-WL	CS-137	1.00E+20	1.00E+20	1.00E+20	1.00E+20	1.00E+20	1.00E+20	1.00E+20	1.00E+20	1.00E+20	1.00E+20
P-WL	CS-137	1.00E+20	1.00E+20	1.00E+20	1.00E+20	1.00E+20	1.00E+20	1.00E+20	1.00E+20	1.00E+20	1.00E+20
P-SW	CS-137	1.00E+20	1.00E+20	1.00E+20	1.00E+20	1.00E+20	1.00E+20	1.00E+20	1.00E+20	1.00E+20	1.00E+20
I-WL	BA-140	1.00E+20	1.00E+20	1.00E+20	1.00E+20	1.00E+20	1.00E+20	1.00E+20	1.00E+20	1.00E+20	1.00E+20
P-WL	BA-140	1.00E+20	1.00E+20	1.00E+20	1.00E+20	1.00E+20	1.00E+20	1.00E+20	1.00E+20	1.00E+20	1.00E+20
P-SW	BA-140	1.00E+20	1.00E+20	1.00E+20	1.00E+20	1.00E+20	1.00E+20	1.00E+20	1.00E+20	1.00E+20	1.00E+20
I-WL	LA-140	1.00E+20	1.00E+20	1.00E+20	1.00E+20	1.00E+20	1.00E+20	1.00E+20	1.00E+20	1.00E+20	1.00E+20
P-WL	LA-140	1.00E+20	1.00E+20	1.00E+20	1.00E+20	1.00E+20	1.00E+20	1.00E+20	1.00E+20	1.00E+20	1.00E+20
P-SW	LA-140	1.00E+20	1.00E+20	1.00E+20	1.00E+20	1.00E+20	1.00E+20	1.00E+20	1.00E+20	1.00E+20	1.00E+20
I-WL	CE-141	1.00E+20	1.00E+20	1.00E+20	1.00E+20	1.00E+20	1.00E+20	1.00E+20	1.00E+20	1.00E+20	1.00E+20
P-WL	CE-141	1.00E+20	1.00E+20	1.00E+20	1.00E+20	1.00E+20	1.00E+20	1.00E+20	1.00E+20	1.00E+20	1.00E+20
P-SW	CE-141	1.00E+20	1.00E+20	1.00E+20	1.00E+20	1.00E+20	1.00E+20	1.00E+20	1.00E+20	1.00E+20	1.00E+20
I-WL	CE-144	1.00E+20	1.00E+20	1.00E+20	1.00E+20	1.00E+20	1.00E+20	1.00E+20	1.00E+20	1.00E+20	1.00E+20
P-WL	CE-144	1.00E+20	1.00E+20	1.00E+20	1.00E+20	1.00E+20	1.00E+20	1.00E+20	1.00E+20	1.00E+20	1.00E+20
P-SW	CE-144	1.00E+20	1.00E+20	1.00E+20	1.00E+20	1.00E+20	1.00E+20	1.00E+20	1.00E+20	1.00E+20	1.00E+20
I-WL	EU-152	1.00E+20	1.00E+20	1.00E+20	1.00E+20	1.00E+20	1.00E+20	1.00E+20	1.00E+20	1.00E+20	1.00E+20
P-WL	EU-152	1.00E+20	1.00E+20	1.00E+20	1.00E+20	1.00E+20	1.00E+20	1.00E+20	1.00E+20	1.00E+20	1.00E+20
P-SW	EU-152	1.00E+20	1.00E+20	1.00E+20	1.00E+20	1.00E+20	1.00E+20	1.00E+20	1.00E+20	1.00E+20	1.00E+20
I-WL	EU-154	1.74E+17	1.46E+17	2.00E+16	8.27E+16	1.59E+17	7.03E+16	1.23E+17	5.86E+16	1.49E+17	8.27E+16
P-WL	EU-154	1.00E+20	1.00E+20	1.00E+20	1.00E+20	1.00E+20	1.00E+20	1.00E+20	1.00E+20	1.00E+20	1.00E+20
P-SW	EU-154	1.00E+20	1.00E+20	1.00E+20	1.00E+20	1.00E+20	1.00E+20	1.00E+20	1.00E+20	1.00E+20	1.00E+20
I-WL	YB-169	1.00E+20	1.00E+20	1.00E+20	1.00E+20	1.00E+20	1.00E+20	1.00E+20	1.00E+20	1.00E+20	1.00E+20
P-WL	YB-169	1.00E+20	1.00E+20	1.00E+20	1.00E+20	1.00E+20	1.00E+20	1.00E+20	1.00E+20	1.00E+20	1.00E+20
P-SW	YB-169	1.00E+20	1.00E+20	1.00E+20	1.00E+20	1.00E+20	1.00E+20	1.00E+20	1.00E+20	1.00E+20	1.00E+20
I-WL	PB-210	1.00E+20	1.00E+20	1.00E+20	1.00E+20	1.00E+20	1.00E+20	1.00E+20	1.00E+20	1.00E+20	1.00E+20
P-WL	PB-210	1.00E+20	1.00E+20	1.00E+20	1.00E+20	1.00E+20	1.00E+20	1.00E+20	1.00E+20	1.00E+20	1.00E+20
P-SW	PB-210	1.00E+20	1.00E+20	1.00E+20	1.00E+20	1.00E+20	1.00E+20	1.00E+20	1.00E+20	1.00E+20	1.00E+20
I-WL	PO-210	1.00E+20	1.00E+20	1.00E+20	1.00E+20	1.00E+20	1.00E+20	1.00E+20	1.00E+20	1.00E+20	1.00E+20
P-WL	PO-210	1.00E+20	1.00E+20	1.00E+20	1.00E+20	1.00E+20	1.00E+20	1.00E+20	1.00E+20	1.00E+20	1.00E+20
P-SW	PO-210	1.00E+20	1.00E+20	1.00E+20	1.00E+20	1.00E+20	1.00E+20	1.00E+20	1.00E+20	1.00E+20	1.00E+20
I-WL	RN-222	1.00E+20	1.00E+20	1.00E+20	1.00E+20	1.00E+20	1.00E+20	1.00E+20	1.00E+20	1.00E+20	1.00E+20
P-WL	RN-222	1.00E+20	1.00E+20	1.00E+20	1.00E+20	1.00E+20	1.00E+20	1.00E+20	1.00E+20	1.00E+20	1.00E+20
P-SW	RN-222	1.00E+20	1.00E+20	1.00E+20	1.00E+20	1.00E+20	1.00E+20	1.00E+20	1.00E+20	1.00E+20	1.00E+20
I-WL	RA-226	8.50E+02	1.62E+04	1.48E+03	1.54E+02	8.51E+02	8.53E+02	2.36E+02	2.63E+01	8.41E+02	3.73E+02
P-WL	RA-226	6.17E+06	1.17E+08	1.07E+07	1.11E+06	6.17E+06	6.19E+06	1.71E+06	1.91E+05	6.10E+06	2.71E+06
P-SW	RA-226	1.00E+20	1.00E+20	1.00E+20	1.00E+20	1.00E+20	1.00E+20	1.00E+20	1.00E+20	1.00E+20	1.00E+20
I-WL	RA-228	1.00E+20	1.00E+20	1.00E+20	1.00E+20	1.00E+20	1.00E+20	1.00E+20	1.00E+20	1.00E+20	1.00E+20
P-WL	RA-228	1.00E+20	1.00E+20	1.00E+20	1.00E+20	1.00E+20	1.00E+20	1.00E+20	1.00E+20	1.00E+20	1.00E+20
P-SW	RA-228	1.00E+20	1.00E+20	1.00E+20	1.00E+20	1.00E+20	1.00E+20	1.00E+20	1.00E+20	1.00E+20	1.00E+20
I-WL	AC-227	1.00E+20	1.00E+20	1.00E+20	1.00E+20	1.00E+20	1.00E+20	1.00E+20	1.00E+20	1.00E+20	1.00E+20
P-WL	AC-227	1.00E+20	1.00E+20	1.00E+20	1.00E+20	1.00E+20	1.00E+20	1.00E+20	1.00E+20	1.00E+20	1.00E+20
P-SW	AC-227	1.00E+20	1.00E+20	1.00E+20	1.00E+20	1.00E+20	1.00E+20	1.00E+20	1.00E+20	1.00E+20	1.00E+20
I-WL	TH-228	1.00E+20	1.00E+20	1.00E+20	1.00E+20	1.00E+20	1.00E+20	1.00E+20	1.00E+20	1.00E+20	1.00E+20
P-WL	TH-228	1.00E+20	1.00E+20	1.00E+20	1.00E+20	1.00E+20	1.00E+20	1.00E+20	1.00E+20	1.00E+20	1.00E+20
P-SW	TH-228	1.00E+20	1.00E+20	1.00E+20	1.00E+20	1.00E+20	1.00E+20	1.00E+20	1.00E+20	1.00E+20	1.00E+20
I-WL	TH-229	1.00E+20	1.00E+20	1.00E+20	1.00E+20	1.00E+20	1.00E+20	1.00E+20	1.00E+20	1.00E+20	1.00E+20
P-WL	TH-229	1.00E+20	1.00E+20	1.00E+20	1.00E+20	1.00E+20	1.00E+20	1.00E+20	1.00E+20	1.00E+20	1.00E+20
P-SW	TH-229	1.00E+20	1.00E+20	1.00E+20	1.00E+20	1.00E+20	1.00E+20	1.00E+20	1.00E+20	1.00E+20	1.00E+20
I-WL	TH-230	1.00E+20	1.00E+20	1.00E+20	1.00E+20	1.00E+20	1.00E+20	1.00E+20	1.00E+20	1.00E+20	1.00E+20
P-WL	TH-230	1.00E+20	1.00E+20	1.00E+20	1.00E+20	1.00E+20	1.00E+20	1.00E+20	1.00E+20	1.00E+20	1.00E+20
P-SW	TH-230	1.00E+20	1.00E+20	1.00E+20	1.00E+20	1.00E+20	1.00E+20	1.00E+20	1.00E+20	1.00E+20	1.00E+20
I-WL	TH-232	1.00E+20	1.00E+20	1.00E+20	1.00E+20	1.00E+20	1.00E+20	1.00E+20	1.00E+20	1.00E+20	1.00E+20

P-WL	TH-232	1.00E+20	1.00E+20	1.00E+20	1.00E+20	1.00E+20	1.00E+20	1.00E+20	1.00E+20	1.00E+20	1.00E+20
P-SW	TH-232	1.00E+20	1.00E+20	1.00E+20	1.00E+20	1.00E+20	1.00E+20	1.00E+20	1.00E+20	1.00E+20	1.00E+20
I-WL	PA-231	1.00E+20	1.00E+20	1.00E+20	1.00E+20	1.00E+20	1.00E+20	1.00E+20	1.00E+20	1.00E+20	1.00E+20
P-WL	PA-231	1.00E+20	1.00E+20	1.00E+20	1.00E+20	1.00E+20	1.00E+20	1.00E+20	1.00E+20	1.00E+20	1.00E+20
P-SW	PA-231	1.00E+20	1.00E+20	1.00E+20	1.00E+20	1.00E+20	1.00E+20	1.00E+20	1.00E+20	1.00E+20	1.00E+20
I-WL	U-232	1.00E+20	1.00E+20	1.00E+20	1.00E+20	1.00E+20	1.00E+20	1.00E+20	1.00E+20	1.00E+20	1.00E+20
P-WL	U-232	1.00E+20	1.00E+20	1.00E+20	1.00E+20	1.00E+20	1.00E+20	1.00E+20	1.00E+20	1.00E+20	1.00E+20
P-SW	U-232	1.00E+20	1.00E+20	1.00E+20	1.00E+20	1.00E+20	1.00E+20	1.00E+20	1.00E+20	1.00E+20	1.00E+20
I-WL	U-233	1.00E+20	1.00E+20	1.00E+20	1.00E+20	1.00E+20	1.00E+20	1.00E+20	1.00E+20	1.00E+20	1.00E+20
P-WL	U-233	1.00E+20	1.00E+20	1.00E+20	1.00E+20	1.00E+20	1.00E+20	1.00E+20	1.00E+20	1.00E+20	1.00E+20
P-SW	U-233	1.00E+20	1.00E+20	1.00E+20	1.00E+20	1.00E+20	1.00E+20	1.00E+20	1.00E+20	1.00E+20	1.00E+20
I-WL	U-234	1.00E+20	1.00E+20	1.00E+20	1.00E+20	1.00E+20	1.00E+20	1.00E+20	1.00E+20	1.00E+20	1.00E+20
P-WL	U-234	1.00E+20	1.00E+20	1.00E+20	1.00E+20	1.00E+20	1.00E+20	1.00E+20	1.00E+20	1.00E+20	1.00E+20
P-SW	U-234	1.00E+20	1.00E+20	1.00E+20	1.00E+20	1.00E+20	1.00E+20	1.00E+20	1.00E+20	1.00E+20	1.00E+20
I-WL	U-235	1.00E+20	1.00E+20	1.00E+20	1.00E+20	1.00E+20	1.00E+20	1.00E+20	1.00E+20	1.00E+20	1.00E+20
P-WL	U-235	1.00E+20	1.00E+20	1.00E+20	1.00E+20	1.00E+20	1.00E+20	1.00E+20	1.00E+20	1.00E+20	1.00E+20
P-SW	U-235	1.00E+20	1.00E+20	1.00E+20	1.00E+20	1.00E+20	1.00E+20	1.00E+20	1.00E+20	1.00E+20	1.00E+20
I-WL	U-236	1.00E+20	1.00E+20	1.00E+20	1.00E+20	1.00E+20	1.00E+20	1.00E+20	1.00E+20	1.00E+20	1.00E+20
P-WL	U-236	1.00E+20	1.00E+20	1.00E+20	1.00E+20	1.00E+20	1.00E+20	1.00E+20	1.00E+20	1.00E+20	1.00E+20
P-SW	U-236	1.00E+20	1.00E+20	1.00E+20	1.00E+20	1.00E+20	1.00E+20	1.00E+20	1.00E+20	1.00E+20	1.00E+20
I-WL	U-238	1.00E+20	1.00E+20	1.00E+20	1.00E+20	1.00E+20	1.00E+20	1.00E+20	1.00E+20	1.00E+20	1.00E+20
P-WL	U-238	1.00E+20	1.00E+20	1.00E+20	1.00E+20	1.00E+20	1.00E+20	1.00E+20	1.00E+20	1.00E+20	1.00E+20
P-SW	U-238	1.00E+20	1.00E+20	1.00E+20	1.00E+20	1.00E+20	1.00E+20	1.00E+20	1.00E+20	1.00E+20	1.00E+20
I-WL	NP-237	1.55E+04	2.86E+05	9.56E+03	1.92E+03	9.16E+02	1.20E+02	3.16E+02	2.21E+01	1.58E+04	4.10E+02
P-WL	NP-237	1.00E+20	1.00E+20	1.00E+20	1.00E+20	1.00E+20	1.00E+20	1.00E+20	1.00E+20	1.00E+20	1.00E+20
P-SW	NP-237	1.00E+20	1.00E+20	1.00E+20	1.00E+20	1.00E+20	1.00E+20	1.00E+20	1.00E+20	1.00E+20	1.00E+20
I-WL	PU-236	1.00E+20	1.00E+20	1.00E+20	1.00E+20	1.00E+20	1.00E+20	1.00E+20	1.00E+20	1.00E+20	1.00E+20
P-WL	PU-236	1.00E+20	1.00E+20	1.00E+20	1.00E+20	1.00E+20	1.00E+20	1.00E+20	1.00E+20	1.00E+20	1.00E+20
P-SW	PU-236	1.00E+20	1.00E+20	1.00E+20	1.00E+20	1.00E+20	1.00E+20	1.00E+20	1.00E+20	1.00E+20	1.00E+20
I-WL	PU-238	1.00E+20	1.00E+20	1.00E+20	1.00E+20	1.00E+20	1.00E+20	1.00E+20	1.00E+20	1.00E+20	1.00E+20
P-WL	PU-238	1.00E+20	1.00E+20	1.00E+20	1.00E+20	1.00E+20	1.00E+20	1.00E+20	1.00E+20	1.00E+20	1.00E+20
P-SW	PU-238	1.00E+20	1.00E+20	1.00E+20	1.00E+20	1.00E+20	1.00E+20	1.00E+20	1.00E+20	1.00E+20	1.00E+20
I-WL	PU-239	1.00E+20	1.00E+20	1.00E+20	1.00E+20	1.00E+20	1.00E+20	1.00E+20	1.00E+20	1.00E+20	1.00E+20
P-WL	PU-239	1.00E+20	1.00E+20	1.00E+20	1.00E+20	1.00E+20	1.00E+20	1.00E+20	1.00E+20	1.00E+20	1.00E+20
P-SW	PU-239	1.00E+20	1.00E+20	1.00E+20	1.00E+20	1.00E+20	1.00E+20	1.00E+20	1.00E+20	1.00E+20	1.00E+20
I-WL	PU-240	1.00E+20	1.00E+20	1.00E+20	1.00E+20	1.00E+20	1.00E+20	1.00E+20	1.00E+20	1.00E+20	1.00E+20
P-WL	PU-240	1.00E+20	1.00E+20	1.00E+20	1.00E+20	1.00E+20	1.00E+20	1.00E+20	1.00E+20	1.00E+20	1.00E+20
P-SW	PU-240	1.00E+20	1.00E+20	1.00E+20	1.00E+20	1.00E+20	1.00E+20	1.00E+20	1.00E+20	1.00E+20	1.00E+20
I-WL	PU-241	1.00E+20	1.00E+20	1.00E+20	1.00E+20	1.00E+20	1.00E+20	1.00E+20	1.00E+20	1.00E+20	1.00E+20
P-WL	PU-241	1.00E+20	1.00E+20	1.00E+20	1.00E+20	1.00E+20	1.00E+20	1.00E+20	1.00E+20	1.00E+20	1.00E+20
P-SW	PU-241	1.00E+20	1.00E+20	1.00E+20	1.00E+20	1.00E+20	1.00E+20	1.00E+20	1.00E+20	1.00E+20	1.00E+20
I-WL	PU-242	1.00E+20	1.00E+20	1.00E+20	1.00E+20	1.00E+20	1.00E+20	1.00E+20	1.00E+20	1.00E+20	1.00E+20
P-WL	PU-242	1.00E+20	1.00E+20	1.00E+20	1.00E+20	1.00E+20	1.00E+20	1.00E+20	1.00E+20	1.00E+20	1.00E+20
P-SW	PU-242	1.00E+20	1.00E+20	1.00E+20	1.00E+20	1.00E+20	1.00E+20	1.00E+20	1.00E+20	1.00E+20	1.00E+20
I-WL	PU-244	1.00E+20	1.00E+20	1.00E+20	1.00E+20	1.00E+20	1.00E+20	1.00E+20	1.00E+20	1.00E+20	1.00E+20
P-WL	PU-244	1.00E+20	1.00E+20	1.00E+20	1.00E+20	1.00E+20	1.00E+20	1.00E+20	1.00E+20	1.00E+20	1.00E+20
P-SW	PU-244	1.00E+20	1.00E+20	1.00E+20	1.00E+20	1.00E+20	1.00E+20	1.00E+20	1.00E+20	1.00E+20	1.00E+20
I-WL	AM-241	2.23E+16	1.00E+20	1.31E+16	2.74E+15	1.25E+15	1.61E+14	4.29E+14	3.43E+13	2.28E+16	5.98E+14
P-WL	AM-241	1.00E+20	1.00E+20	1.00E+20	1.00E+20	1.00E+20	1.00E+20	1.00E+20	1.00E+20	1.00E+20	1.00E+20
P-SW	AM-241	1.00E+20	1.00E+20	1.00E+20	1.00E+20	1.00E+20	1.00E+20	1.00E+20	1.00E+20	1.00E+20	1.00E+20
I-WL	AM-243	8.94E+03	1.81E+05	5.43E+03	1.20E+03	5.46E+02	7.07E+01	1.88E+02	1.41E+01	9.10E+03	2.54E+02
P-WL	AM-243	1.00E+20	1.00E+20	1.00E+20	1.00E+20	1.00E+20	1.00E+20	1.00E+20	1.00E+20	1.00E+20	1.00E+20
P-SW	AM-243	1.00E+20	1.00E+20	1.00E+20	1.00E+20	1.00E+20	1.00E+20	1.00E+20	1.00E+20	1.00E+20	1.00E+20
I-WL	CM-242	1.00E+20	1.00E+20	1.00E+20	1.00E+20	1.00E+20	1.00E+20	1.00E+20	1.00E+20	1.00E+20	1.000E+20
P-WL	CM-242	1.00E+20	1.00E+20	1.00E+20	1.00E+20	1.00E+20	1.00E+20	1.00E+20	1.00E+20	1.00E+20	1.00E+20
P-SW	CM-242	1.00E+20	1.00E+20	1.00E+20	1.00E+20	1.00E+20	1.00E+20	1.00E+20	1.00E+20	1.00E+20	1.00E+20
I-WL	CM-243	1.00E+20	1.00E+20	1.00E+20	1.00E+20	1.00E+20	1.00E+20	1.00E+20	1.00E+20	1.00E+20	1.00E+20
P-WL	CM-243	1.00E+20	1.00E+20	1.00E+20	1.00E+20	1.00E+20	1.00E+20	1.00E+20	1.00E+20	1.00E+20	1.00E+20
P-SW	CM-243	1.00E+20	1.00E+20	1.00E+20	1.00E+20	1.00E+20	1.00E+20	1.00E+20	1.00E+20	1.00E+20	1.00E+20
I-WL	CM-244	1.00E+20	1.00E+20	1.00E+20	1.00E+20	1.00E+20	1.00E+20	1.00E+20	1.00E+20	1.00E+20	1.00E+20
P-WL	CM-244	1.00E+20	1.00E+20	1.00E+20	1.00E+20	1.00E+20	1.00E+20	1.00E+20	1.00E+20	1.00E+20	1.00E+20
P-SW	CM-244	1.00E+20	1.00E+20	1.00E+20	1.00E+20	1.00E+20	1.00E+20	1.00E+20	1.00E+20	1.00E+20	1.00E+20
I-WL	CM-248	3.51E+03	2.66E+04	1.89E+03	5.19E+02	2.56E+02	3.30E+01	3.41E+02	2.36E+01	4.33E+03	2.39E+02

P-WL	CM-248	1.00E+20	1.00E+20	1.00E+20	1.00E+20	1.00E+20	1.00E+20	1.00E+20	1.00E+20	1.00E+20	1.00E+20	1.00E+20
P-SW	CM-248	1.00E+20	1.00E+20	1.00E+20	1.00E+20	1.00E+20	1.00E+20	1.00E+20	1.00E+20	1.00E+20	1.00E+20	1.00E+20
I-WL	CF-252	1.00E+20	1.00E+20	1.00E+20	1.00E+20	1.00E+20	1.00E+20	1.00E+20	1.00E+20	1.00E+20	1.00E+20	1.00E+20
P-WL	CF-252	1.00E+20	1.00E+20	1.00E+20	1.00E+20	1.00E+20	1.00E+20	1.00E+20	1.00E+20	1.00E+20	1.00E+20	1.00E+20
P-SW	CF-252	1.00E+20	1.00E+20	1.00E+20	1.00E+20	1.00E+20	1.00E+20	1.00E+20	1.00E+20	1.00E+20	1.00E+20	1.00E+20

INVIMPS Example 2 Summary Output

SANITARY LANDFILL

LIFE= 20 OVFL= 1
REGN= 2 DATA= 0
IPOP= 1 INST= 5

WASTE: INC/SLF WEIGHT: 1.00E+02 MT DENSITY: 1.00E+00 MT/M3

ID= 3 IA= 1 IK1= 0 IK2= 0 PROCESS= 5
IXS= 4 100 1 4
ICS= 50 20 20 10

SUMMARY OF MINIMUMS

	SUBSTREAM-1								ALL WASTE	
	INT-CO	INT-AQ	IN-WAT	ER-WAT	OP-IND	OP-MWR	LA-OPS	LA-OVF	TR-MAX	RC-MPK
H-3	1.00E+38	9.79E+00	1.00E+38	1.00E+38	1.98E+05	1.00E+38	1.10E+04	9.45E+01	0.00E+00	0.00E+00
C-14	1.00E+38	2.00E+01	3.79E+04	3.59E+02	2.79E+03	1.00E+38	1.09E+04	7.07E+01	0.00E+00	0.00E+00
NA-22	1.71E+00	6.13E-01	1.96E+05	1.00E+38	2.39E+03	9.13E-02	1.00E+38	6.07E+04	3.31E-03	0.00E+00
P-32	1.00E+38	1.00E+38	1.00E+38	1.00E+38	1.73E+03	2.74E+03	3.41E+04	1.00E+38	0.00E+00	0.00E+00
P-33	1.00E+38	1.00E+38	1.00E+38	1.00E+38	9.59E+03	1.73E+04	1.88E+05	1.00E+38	0.00E+00	0.00E+00
S-35	1.00E+38	1.00E+38	1.00E+38	1.00E+38	2.15E+04	1.44E+04	1.00E+38	1.00E+38	0.00E+00	0.00E+00
CL-36	1.28E+04	1.20E+00	7.72E+04	6.50E+02	3.27E+03	1.60E+03	1.12E+03	7.24E+00	0.00E+00	0.00E+00
CA-45	1.00E+38	1.00E+38	1.00E+38	1.00E+38	1.02E+04	7.56E+03	5.71E+05	1.00E+38	1.00E+38	0.00E+00
SC-46	1.00E+38	6.05E+05	1.00E+38	1.00E+38	4.19E+03	9.87E-02	1.00E+38	1.00E+38	3.57E-03	0.00E+00
CR-51	1.00E+38	1.00E+38	1.00E+38	1.00E+38	2.00E+05	6.62E+00	1.00E+38	1.00E+38	2.40E-01	0.00E+00
MN-54	7.78E+01	2.78E+01	1.00E+38	1.00E+38	1.87E+04	2.40E-01	4.78E+05	2.01E+05	8.69E-03	0.00E+00
FE-55	3.27E+05	2.47E+05	1.00E+38	1.00E+38	7.35E+04	1.08E+04	1.00E+38	2.79E+04	0.00E+00	0.00E+00
FE-59	1.00E+38	1.00E+38	1.00E+38	1.00E+38	5.39E+03	1.67E-01	1.77E+05	1.00E+38	6.04E-03	0.00E+00
CO-57	1.18E+03	4.21E+02	1.00E+38	1.00E+38	3.39E+04	2.18E+00	1.00E+38	8.31E+05	7.90E-02	0.00E+00
CO-58	1.00E+38	1.00E+38	1.00E+38	1.00E+38	1.09E+04	2.44E-01	5.12E+05	1.00E+38	8.84E-03	0.00E+00
CO-60	7.61E-01	2.72E-01	1.70E+05	1.00E+38	1.61E+03	7.89E-02	2.62E+04	3.28E+02	2.86E-03	0.00E+00
NI-59	4.87E+05	2.62E+04	1.00E+38	4.19E+04	2.45E+05	6.09E+04	5.53E+05	3.58E+03	0.00E+00	0.00E+00
NI-63	1.97E+05	8.01E+03	1.00E+38	1.00E+38	7.28E+04	2.37E+04	1.75E+05	1.17E+03	0.00E+00	0.00E+00
ZN-65	3.01E+02	1.00E+02	6.62E+05	1.00E+38	3.86E+02	3.50E-01	5.52E+03	6.16E+03	1.27E-02	0.00E+00
SE-75	1.11E+05	3.73E+04	1.00E+38	1.00E+38	2.99E+03	6.15E-01	1.56E+05	1.00E+38	2.23E-02	0.00E+00
RB-86	1.00E+38	1.00E+38	1.00E+38	1.00E+38	8.74E+03	2.10E+00	1.00E+38	1.00E+38	7.59E-02	0.00E+00
SR-85	1.00E+38	1.00E+38	1.00E+38	1.00E+38	2.51E+04	3.95E-01	1.00E+38	1.00E+38	1.43E-02	0.00E+00
SR-89	1.00E+38	1.00E+38	1.00E+38	1.00E+38	2.24E+03	8.41E+02	1.61E+05	1.00E+38	8.33E+02	0.00E+00
SR-90	2.88E+02	1.36E+02	6.26E+04	1.00E+38	2.94E+02	3.18E+01	1.16E+04	8.51E+01	2.31E+05	0.00E+00
ZR-95	1.00E+38	1.00E+38	1.00E+38	1.00E+38	5.74E+03	1.33E-01	4.35E+05	1.00E+38	4.80E-03	0.00E+00
NB-94	6.42E-01	2.30E-01	2.32E+03	2.02E+01	7.72E+02	1.29E-01	3.47E+02	2.24E+00	4.66E-03	0.00E+00
NB-95	1.00E+38	1.00E+38	1.00E+38	1.00E+38	2.42E+03	2.60E-01	2.19E+04	1.00E+38	9.43E-03	0.00E+00
MO-99	1.00E+38	1.00E+38	1.00E+38	1.00E+38	4.11E+03	1.42E+00	2.67E+04	1.00E+38	5.14E-02	0.00E+00
TC-99	4.14E+04	3.70E+00	1.47E+05	1.24E+03	6.29E+03	5.18E+03	2.12E+03	1.37E+01	1.00E+38	0.00E+00
TC-99M	1.00E+38	1.00E+38	1.00E+38	1.00E+38	1.34E+05	2.08E+00	9.20E+05	1.00E+38	7.52E-02	0.00E+00
RU-103	1.00E+38	1.00E+38	1.00E+38	1.00E+38	1.09E+03	4.42E-01	7.08E+03	1.00E+38	1.60E-02	0.00E+00
RU-106	1.68E+02	5.46E+01	7.13E+04	1.00E+38	1.02E+02	1.09E+00	3.30E+02	6.59E+01	3.99E-02	0.00E+00
AG-108	1.39E+00	4.96E-01	1.90E+05	1.00E+38	1.36E+03	1.39E-01	1.00E+38	3.48E+04	5.03E-03	0.00E+00
AG-110	5.24E+01	1.88E+01	1.00E+38	1.00E+38	3.07E+03	7.37E-02	1.00E+38	1.00E+38	2.67E-03	0.00E+00
CD-109	4.38E+02	9.34E+01	3.18E+05	1.00E+38	1.33E+03	5.36E+00	1.86E+04	1.97E+03	1.95E-01	0.00E+00
SN-113	2.47E+05	8.83E+04	1.00E+38	1.00E+38	3.17E+03	8.27E-01	1.00E+38	1.00E+38	2.99E-02	0.00E+00
SN-126	5.17E-01	1.85E-01	4.68E+03	3.96E+01	5.55E+02	1.04E-01	4.80E+04	3.11E+02	3.76E-03	0.00E+00
SB-124	1.00E+38	1.00E+38	1.00E+38	1.00E+38	2.59E+03	1.10E-01	1.00E+38	1.00E+38	3.99E-03	0.00E+00
SB-125	8.81E+00	3.15E+00	8.00E+05	1.00E+38	9.63E+03	4.92E-01	1.00E+38	2.40E+05	1.78E-02	0.00E+00
I-125	1.00E+38	1.00E+38	1.00E+38	1.00E+38	1.26E+01	3.85E+00	9.69E+02	1.00E+38	1.41E-01	0.00E+00
I-129	2.02E+02	8.87E-01	5.56E+02	4.67E+00	2.05E+00	3.15E+01	8.01E+00	5.18E-02	2.75E+00	0.00E+00
I-131	1.00E+38	1.00E+38	1.00E+38	1.00E+38	8.87E+00	5.65E-01	6.93E+02	1.00E+38	2.05E-02	0.00E+00
CS-134	3.51E+00	1.26E+00	4.27E+04	1.00E+38	1.10E+03	1.30E-01	4.63E+05	1.62E+04	4.71E-03	0.00E+00
CS-135	2.51E+05	1.25E+04	9.83E+04	8.25E+02	1.38E+04	3.14E+04	1.00E+38	6.67E+03	0.00E+00	0.00E+00
CS-136	1.00E+38	1.00E+38	1.00E+38	1.00E+38	5.75E+03	9.42E-02	1.00E+38	1.00E+38	3.41E-03	0.00E+00

CS-137	2.02E+00	7.23E-01	1.42E+04	1.00E+38	1.81E+03	3.61E-01	1.60E+05	1.16E+03	1.31E-02	0.00E+00
BA-140	1.00E+38	1.00E+38	1.00E+38	1.00E+38	2.82E+03	1.17E+00	1.00E+38	1.00E+38	4.22E-02	0.00E+00
LA-140	1.00E+38	1.00E+38	1.00E+38	1.00E+38	3.49E+03	8.81E-02	1.00E+38	1.00E+38	3.19E-03	0.00E+00
CE-141	1.00E+38	1.00E+38	1.00E+38	1.00E+38	8.37E+03	3.31E+00	1.00E+38	1.00E+38	1.20E-01	0.00E+00
CE-144	1.89E+03	6.89E+02	1.00E+38	1.00E+38	8.61E+02	4.32E+00	1.00E+38	1.00E+38	1.64E-01	0.00E+00
EU-152	1.29E+00	4.63E-01	1.42E+05	1.00E+38	1.72E+03	1.97E-01	1.00E+38	2.19E+04	7.15E-03	0.00E+00
EU-154	1.10E+00	3.92E-01	7.81E+04	1.00E+38	1.14E+03	1.77E-01	1.00E+38	1.10E+04	6.41E-03	0.00E+00
YB-169	1.00E+38	1.00E+38	1.00E+38	1.00E+38	9.05E+03	8.68E-01	1.00E+38	1.00E+38	3.14E-02	0.00E+00
PB-210	4.52E+01	1.77E+01	1.13E+02	1.00E+38	2.41E+01	1.21E+01	2.98E+02	2.29E+00	4.30E+00	0.00E+00
PO-210	4.42E+05	2.09E+05	9.32E+05	1.00E+38	2.46E+01	5.88E+00	6.69E+02	4.08E+04	4.07E+02	0.00E+00
RN-222	8.76E+04	3.44E+04	2.20E+05	1.00E+38	6.99E+03	1.29E-01	5.59E+03	1.00E+38	4.66E-03	0.00E+00
RA-226	6.29E-01	2.18E-01	2.47E+02	1.23E+00	1.24E+01	4.28E+00	1.09E+02	7.04E-01	1.40E+00	0.00E+00
RA-228	6.75E-01	2.65E-01	6.44E+02	1.00E+38	2.47E+01	2.80E-01	4.95E+02	5.36E+00	1.03E-02	0.00E+00
AC-227	4.98E-01	2.99E-01	2.75E+01	1.00E+38	3.79E-01	5.56E-02	1.26E+01	9.56E-02	2.49E-02	0.00E+00
TH-228	3.52E+00	1.44E+00	8.04E+03	1.00E+38	3.49E+00	1.03E-01	3.21E+03	1.28E+02	5.14E-03	0.00E+00
TH-229	2.62E-01	2.44E-01	1.69E+02	1.55E+00	3.09E-01	3.35E-02	6.79E+01	4.40E-01	3.69E-02	0.00E+00
TH-230	5.42E-01	5.51E-01	3.36E+02	1.69E+00	6.07E-01	6.80E-02	1.36E+02	8.77E-01	4.14E+01	0.00E+00
TH-232	3.64E-01	2.60E-01	2.35E+02	1.42E+00	5.34E-01	5.97E-02	1.21E+02	7.81E-01	0.00E+00	0.00E+00
PA-231	2.12E-01	1.38E-01	1.13E+01	6.85E-02	1.80E-01	2.88E-02	4.88E+00	3.16E-02	2.16E-01	0.00E+00
U-232	5.54E-01	2.62E-01	5.45E+02	6.20E+04	2.45E+00	2.84E-01	1.14E+04	7.71E+01	5.33E+01	0.00E+00
U-233	3.98E+00	4.26E+00	3.40E+04	1.51E+01	4.61E+00	4.99E-01	4.52E+05	2.92E+03	1.40E+02	0.00E+00
U-234	4.03E+00	4.32E+00	3.40E+04	1.46E+02	4.67E+00	5.05E-01	4.49E+05	2.90E+03	9.06E+01	0.00E+00
U-235	2.89E+00	1.82E+00	3.20E+04	3.19E+00	5.17E+00	4.17E-01	4.24E+05	2.75E+03	5.94E-02	0.00E+00
U-236	4.27E+00	4.58E+00	3.60E+04	3.02E+02	4.94E+00	5.35E-01	4.77E+05	3.08E+03	1.69E+02	0.00E+00
U-238	4.30E+00	4.22E+00	3.36E+04	2.81E+02	5.21E+00	5.47E-01	4.45E+05	2.88E+03	6.77E-01	0.00E+00
NP-237	4.67E-01	3.42E-01	6.24E+01	5.23E-01	4.97E-01	6.03E-02	2.03E+02	1.31E+00	4.03E-02	0.00E+00
PU-236	9.86E+00	7.20E+00	1.68E+04	1.00E+38	5.62E+00	6.08E-01	3.80E+05	8.28E+03	3.04E+02	0.00E+00
PU-238	6.88E-01	7.33E-01	2.92E+03	6.19E+04	7.61E-01	8.27E-02	1.07E+04	7.22E+01	4.07E+02	0.00E+00
PU-239	5.20E-01	5.54E-01	2.27E+03	1.96E+01	5.98E-01	6.50E-02	8.03E+03	5.19E+01	0.00E+00	0.00E+00
PU-240	5.21E-01	5.56E-01	2.27E+03	2.11E+01	5.99E-01	6.52E-02	8.04E+03	5.21E+01	3.36E+02	0.00E+00
PU-241	2.37E+01	2.31E+01	6.52E+03	5.77E+01	2.93E+01	3.18E+00	6.80E+05	5.72E+03	3.23E+04	0.00E+00
PU-242	5.16E-01	5.50E-01	2.27E+03	1.90E+01	5.94E-01	6.46E-02	8.11E+03	5.25E+01	3.43E+02	0.00E+00
PU-244	4.49E-01	3.87E-01	2.26E+03	1.73E+01	5.87E-01	5.88E-02	8.02E+03	5.19E+01	2.74E-02	0.00E+00
AM-241	5.55E-01	4.49E-01	4.53E+01	1.71E+00	5.38E-01	6.91E-02	1.84E+01	1.20E-01	5.79E-01	0.00E+00
AM-243	4.80E-01	3.58E-01	4.23E+01	3.87E-01	5.03E-01	6.18E-02	1.71E+01	1.10E-01	4.71E-02	0.00E+00
CM-242	1.33E+02	1.42E+02	5.28E+05	1.00E+38	1.45E+01	1.57E+00	1.84E+05	1.00E+38	9.21E+01	0.00E+00
CM-243	1.03E+00	8.16E-01	1.14E+02	1.49E+04	9.76E-01	1.19E-01	4.43E+02	3.20E+00	7.98E-02	0.00E+00
CM-244	1.62E+00	1.44E+00	1.58E+02	7.90E+03	1.29E+00	1.67E-01	6.51E+02	5.13E+00	7.46E+02	0.00E+00
CM-248	5.05E-01	4.58E-01	5.59E+01	4.70E-01	4.97E-01	6.32E-02	2.01E+02	1.30E+00	0.00E+00	0.00E+00
CF-252	9.15E+00	9.69E+00	2.64E+03	8.38E+04	2.87E+00	3.10E-01	1.33E+03	3.19E+01	3.26E+00	0.00E+00

000555

INVIMPS Example 2 Summary Output (Continued)

SUMMARY OF MINIMUMS

	SUBSTREAM-2								ALL WASTE	
	INT-CO	INT-AQ	IN-WAT	ER-WAT	OP-IND	OP-MWR	LA-OPS	LA-OVF	IC-IND	IC-MWR
H-3	1.00E+38	7.18E+01	1.00E+38	1.00E+38	1.00E+38	1.00E+38	8.08E+04	6.93E+02	4.84E+02	1.00E+38
C-14	1.00E+38	1.47E+02	2.78E+05	2.64E+02	2.04E+05	1.00E+38	8.01E+04	5.18E+02	8.19E+00	1.00E+38
NA-22	1.26E+01	4.50E+00	1.00E+38	1.00E+38	1.75E+05	6.70E-01	1.00E+38	4.46E+05	1.05E+03	5.34E-02
P-32	1.00E+38	1.00E+38	1.00E+38	1.00E+38	1.27E+05	2.01E+05	2.50E+05	1.00E+38	7.64E+02	3.63E+03
P-33	1.00E+38	1.00E+38	1.00E+38	1.00E+38	7.03E+05	1.00E+38	1.00E+38	1.00E+38	4.23E+03	2.30E+04
S-35	1.00E+38	1.00E+38	1.00E+38	1.00E+38	1.00E+38	1.00E+38	1.00E+38	1.00E+38	9.49E+03	1.91E+04
CL-36	9.39E+04	8.83E+00	5.67E+05	4.77E+02	2.40E+05	1.17E+05	8.21E+03	5.31E+01	7.20E+02	2.12E+03
CA-45	1.00E+38	1.00E+38	1.00E+38	1.00E+38	7.50E+05	5.54E+05	1.00E+38	1.00E+38	4.51E+03	1.00E+04
SC-46	1.00E+38	1.00E+38	1.00E+38	1.00E+38	3.07E+05	7.24E-01	1.00E+38	1.00E+38	1.85E+03	5.78E-02
CR-51	1.00E+38	1.00E+38	1.00E+38	1.00E+38	1.00E+38	4.85E+01	1.00E+38	1.00E+38	8.82E+04	3.87E+00
MN-54	5.71E+02	2.04E+02	1.00E+38	1.00E+38	1.00E+38	1.76E+00	1.00E+38	1.00E+38	8.23E+03	1.40E-01
FE-55	1.00E+38	1.00E+38	1.00E+38	1.00E+38	1.00E+38	7.91E+05	1.00E+38	2.05E+05	3.24E+04	1.43E+04
FE-59	1.00E+38	1.00E+38	1.00E+38	1.00E+38	3.96E+05	1.22E+00	1.00E+38	1.00E+38	2.38E+03	9.76E-02
CO-57	8.64E+03	3.09E+03	1.00E+38	1.00E+38	1.00E+38	1.60E+01	1.00E+38	1.00E+38	1.50E+04	1.28E+00
CO-58	1.00E+38	1.00E+38	1.00E+38	1.00E+38	8.00E+05	1.79E+00	1.00E+38	1.00E+38	4.81E+03	1.43E-01
CO-60	5.59E+00	2.00E+00	1.00E+38	1.00E+38	1.18E+05	5.79E-01	1.92E+05	2.41E+03	7.11E+02	4.62E-02
NI-59	1.00E+38	1.92E+05	1.00E+38	3.07E+04	1.00E+38	1.00E+38	1.00E+38	2.62E+04	1.08E+05	8.07E+04
NI-63	1.00E+38	5.88E+04	1.00E+38	1.00E+38	1.00E+38	1.00E+38	1.00E+38	8.61E+03	3.21E+04	3.14E+04
ZN-65	2.21E+03	7.37E+02	1.00E+38	1.00E+38	2.83E+04	2.57E+00	4.05E+04	4.52E+04	1.70E+02	2.05E-01
SE-75	8.17E+05	2.74E+05	1.00E+38	1.00E+38	2.19E+05	4.51E+00	1.00E+38	1.00E+38	1.32E+03	3.60E-01
RB-86	1.00E+38	1.00E+38	1.00E+38	1.00E+38	6.41E+05	1.54E+01	1.00E+38	1.00E+38	3.85E+03	1.23E+00
SR-85	1.00E+38	1.00E+38	1.00E+38	1.00E+38	1.00E+38	2.90E+00	1.00E+38	1.00E+38	1.11E+04	2.31E-01
SR-89	1.00E+38	1.00E+38	1.00E+38	1.00E+38	1.64E+05	4.64E+04	1.00E+38	1.00E+38	9.88E+02	1.06E+03
SR-90	2.11E+03	9.97E+02	4.59E+05	1.00E+38	2.16E+04	2.34E+03	8.53E+04	6.25E+02	1.30E+02	4.22E+01
ZR-95	1.00E+38	1.00E+38	1.00E+38	1.00E+38	4.21E+05	9.73E-01	1.00E+38	1.00E+38	2.53E+03	7.76E-02
NB-94	4.71E+00	1.68E+00	1.71E+04	1.48E+01	5.66E+04	9.45E-01	2.54E+03	1.65E+01	3.40E+02	7.53E-02
NB-95	1.00E+38	1.00E+38	1.00E+38	1.00E+38	1.77E+05	1.91E+00	1.61E+05	1.00E+38	1.07E+03	1.52E-01
MO-99	1.00E+38	1.00E+38	1.00E+38	1.00E+38	3.01E+05	1.04E+01	1.96E+05	1.00E+38	1.81E+03	8.31E-01
TC-99	3.04E+05	2.72E+01	1.00E+38	9.08E+02	4.61E+05	3.80E+05	1.56E+04	1.01E+02	1.39E+03	6.87E+03
TC-99M	1.00E+38	1.00E+38	1.00E+38	1.00E+38	1.00E+38	1.52E+01	1.00E+38	1.00E+38	2.96E+04	1.22E+00
RU-103	1.00E+38	1.00E+38	1.00E+38	1.00E+38	7.99E+04	3.24E+00	5.19E+04	1.00E+38	2.40E+02	2.59E-01
RU-106	1.23E+03	4.01E+02	5.23E+05	1.00E+38	7.49E+03	8.08E+00	2.42E+03	4.84E+02	2.25E+01	6.41E-01
AG-108	1.02E+01	3.64E+00	1.00E+38	1.00E+38	1.00E+05	1.02E+00	1.00E+38	2.56E+05	6.01E+02	8.13E-02
AG-110	3.85E+02	1.38E+02	1.00E+38	1.00E+38	2.25E+05	5.41E-01	1.00E+38	1.00E+38	1.35E+03	4.31E-02
CD-109	3.22E+03	6.85E+02	1.00E+38	1.00E+38	9.74E+04	3.95E+01	1.37E+05	1.45E+04	5.85E+02	3.15E+00
SN-113	1.00E+38	6.48E+05	1.00E+38	1.00E+38	2.33E+05	6.07E+00	1.00E+38	1.00E+38	1.40E+03	4.84E-01
SN-126	3.79E+00	1.36E+00	3.44E+04	2.90E+01	4.08E+04	7.61E-01	3.52E+05	2.28E+03	2.45E+02	6.07E-02
SB-124	1.00E+38	1.00E+38	1.00E+38	1.00E+38	1.90E+05	8.09E-01	1.00E+38	1.00E+38	1.14E+03	6.45E-02
SB-125	6.47E+01	2.31E+01	1.00E+38	1.00E+38	7.06E+05	3.61E+00	1.00E+38	1.00E+38	4.24E+03	2.88E-01
I-125	1.00E+38	1.00E+38	1.00E+38	1.00E+38	9.23E+02	2.86E+01	7.11E+03	1.00E+38	2.77E+00	2.27E+00
I-129	1.48E+03	6.51E+00	4.08E+03	3.42E+00	1.50E+02	4.89E+02	5.87E+01	3.80E-01	4.52E-01	2.74E+01
I-131	1.00E+38	1.00E+38	1.00E+38	1.00E+38	6.51E+02	4.16E+00	5.08E+03	1.00E+38	1.95E+00	3.31E-01
CS-134	2.58E+01	9.22E+00	3.13E+05	1.00E+38	8.11E+04	9.54E-01	1.00E+38	1.19E+05	4.87E+02	7.61E-02
CS-135	1.00E+38	9.19E+04	7.21E+05	6.06E+02	1.00E+38	1.00E+38	1.00E+38	4.89E+04	6.08E+03	4.16E+04
CS-136	1.00E+38	1.00E+38	1.00E+38	1.00E+38	4.22E+05	6.91E-01	1.00E+38	1.00E+38	2.54E+03	5.51E-02
CS-137	1.48E+01	5.30E+00	1.04E+05	1.00E+38	1.33E+05	2.65E+00	1.00E+38	8.52E+03	7.96E+02	2.11E-01
BA-140	1.00E+38	1.00E+38	1.00E+38	1.00E+38	2.07E+05	8.55E+00	1.00E+38	1.00E+38	1.24E+03	6.82E-01
LA-140	1.00E+38	1.00E+38	1.00E+38	1.00E+38	2.56E+05	6.46E-01	1.00E+38	1.00E+38	1.54E+03	5.15E-02
CE-141	1.00E+38	1.00E+38	1.00E+38	1.00E+38	6.14E+05	2.43E+01	1.00E+38	1.00E+38	3.69E+03	1.93E+00
CE-144	1.38E+04	5.05E+03	1.00E+38	1.00E+38	6.32E+04	3.31E+01	1.00E+38	1.00E+38	3.80E+02	2.60E+00
EU-152	9.48E+00	3.39E+00	1.00E+38	1.00E+38	1.26E+05	1.45E+00	1.00E+38	1.61E+05	7.58E+02	1.15E-01
EU-154	8.04E+00	2.88E+00	5.73E+05	1.00E+38	8.39E+04	1.30E+00	1.00E+38	8.09E+04	5.04E+02	1.04E-01
YB-169	1.00E+38	1.00E+38	1.00E+38	1.00E+38	6.64E+05	6.37E+00	1.00E+38	1.00E+38	3.99E+03	5.08E-01
PB-210	3.31E+02	1.30E+02	8.30E+02	1.00E+38	1.77E+03	4.64E+02	2.19E+03	1.68E+01	1.06E+01	1.42E+01
PO-210	1.00E+38	1.00E+38	1.00E+38	1.00E+38	1.80E+03	4.29E+02	4.91E+03	2.99E+05	1.08E+01	7.78E+00
RN-222	6.43E+05	2.52E+05	1.00E+38	1.00E+38	5.13E+05	9.44E-01	4.10E+04	1.00E+38	3.08E+03	7.53E-02
RA-226	4.61E+00	1.60E+00	1.81E+03	9.01E-01	9.13E+02	1.57E+02	7.96E+02	5.16E+00	5.49E+00	4.97E+00
RA-228	4.95E+00	1.95E+00	4.72E+03	1.00E+38	1.82E+03	2.08E+00	3.63E+03	3.94E+01	1.09E+01	1.65E-01

AC-227	3.65E+00	2.20E+00	2.02E+02	1.00E+38	2.78E+01	2.36E+00	9.23E+01	7.01E-01	1.67E-01	6.69E-02
TH-228	2.58E+01	1.06E+01	5.90E+04	1.00E+38	2.56E+02	1.00E+00	2.36E+04	9.37E+02	1.54E+00	7.13E-02
TH-229	1.93E+00	1.79E+00	1.24E+03	1.14E+00	2.27E+01	1.90E+00	4.98E+02	3.23E+00	1.36E-01	4.26E-02
TH-230	3.98E+00	4.04E+00	2.47E+03	1.24E+00	4.46E+01	4.98E+00	9.94E+02	6.43E+00	2.68E-01	9.00E-02
TH-232	2.67E+00	1.91E+00	1.73E+03	1.04E+00	3.92E+01	4.38E+00	8.86E+02	5.73E+00	2.35E-01	7.91E-02
PA-231	1.56E+00	1.01E+00	8.27E+01	5.03E-02	1.32E+01	2.02E+00	3.58E+01	2.32E-01	7.93E-02	3.79E-02
U-232	4.06E+00	1.92E+00	4.00E+03	4.55E+04	1.80E+02	2.08E+01	8.34E+04	5.66E+02	1.08E+00	3.76E-01
U-233	2.92E+01	3.13E+01	2.49E+05	1.11E+01	3.39E+02	3.66E+01	1.00E+38	2.14E+04	2.03E+00	6.61E-01
U-234	2.96E+01	3.17E+01	2.49E+05	1.07E+02	3.42E+02	3.70E+01	1.00E+38	2.13E+04	2.06E+00	6.68E-01
U-235	2.12E+01	1.33E+01	2.35E+05	2.34E+00	3.79E+02	9.31E+00	1.00E+38	2.01E+04	2.28E+00	4.18E-01
U-236	3.14E+01	3.36E+01	2.64E+05	2.22E+02	3.63E+02	3.92E+01	1.00E+38	2.26E+04	2.18E+00	7.08E-01
U-238	3.15E+01	3.09E+01	2.47E+05	2.06E+02	3.82E+02	3.18E+01	1.00E+38	2.11E+04	2.30E+00	6.99E-01
NP-237	3.43E+00	2.51E+00	4.57E+02	3.84E-01	3.65E+01	2.98E+00	1.49E+03	9.63E+00	2.19E-01	7.48E-02
PU-236	7.23E+01	5.28E+01	1.23E+05	1.00E+38	4.12E+02	4.46E+01	1.00E+38	6.08E+04	2.48E+00	8.05E-01
PU-238	5.05E+00	5.38E+00	2.14E+04	4.54E+04	5.58E+01	6.07E+00	7.87E+04	5.30E+02	3.35E-01	1.10E-01
PU-239	3.82E+00	4.07E+00	1.66E+04	1.44E+01	4.39E+01	4.77E+00	5.89E+04	3.81E+02	2.64E-01	8.62E-02
PU-240	3.83E+00	4.08E+00	1.66E+04	1.55E+01	4.40E+01	4.78E+00	5.90E+04	3.82E+02	2.64E-01	8.64E-02
PU-241	1.74E+02	1.70E+02	4.78E+04	4.23E+01	2.15E+03	2.34E+02	1.00E+38	4.20E+04	1.29E+01	4.22E+00
PU-242	3.79E+00	4.04E+00	1.66E+04	1.40E+01	4.36E+01	4.74E+00	5.95E+04	3.85E+02	2.62E-01	8.55E-02
PU-244	3.29E+00	2.84E+00	1.66E+04	1.27E+01	4.30E+01	2.54E+00	5.89E+04	3.81E+02	2.59E-01	7.10E-02
AM-241	4.07E+00	3.29E+00	3.32E+02	1.25E+00	3.95E+01	4.88E+00	1.35E+02	8.79E-01	2.37E-01	9.10E-02
AM-243	3.92E+00	2.63E+00	3.11E+02	2.84E-01	3.69E+01	3.18E+00	1.25E+02	8.10E-01	2.22E-01	7.72E-02
CM-242	9.77E+02	1.04E+03	1.00E+38	1.00E+38	1.07E+03	1.15E+02	1.00E+38	1.00E+38	6.41E+00	2.08E+00
CM-243	7.54E+00	5.99E+00	8.38E+02	1.10E+04	7.16E+01	5.88E+00	3.25E+03	2.35E+01	4.31E-01	1.48E-01
CM-244	1.19E+01	1.06E+01	1.16E+03	5.80E+03	9.43E+01	1.23E+01	4.77E+03	3.76E+01	5.67E-01	2.21E-01
CM-248	3.71E+00	3.36E+00	4.10E+02	3.45E-01	3.65E+01	4.64E+00	1.48E+03	9.55E+00	2.19E-01	8.37E-02
CF-252	6.71E+01	7.11E+01	1.94E+04	6.15E+04	2.11E+02	2.20E+01	9.77E+03	2.34E+02	1.27E+00	4.08E-01

000557

INVIMPS Example 2 Summary Output (Continued)

SUMMARY OF MINIMUMS

	SUBSTREAM-1			SUBSTREAM-2				
	INT-WL	POP-WL	POP-SW	INT-WL	POP-WL	POP-SW	RC-MET	RC-GLS
H-3	1.31E+04	1.00E+38	1.00E+38	9.63E+04	1.00E+38	1.00E+38	1.78E+02	0.00E+00
C-14	6.99E+02	1.41E+04	2.32E+05	5.13E+03	1.04E+05	1.00E+38	1.11E+04	0.00E+00
NA-22	1.00E+38	1.00E+38	1.00E+38	1.00E+38	1.00E+38	1.00E+38	5.30E-02	1.34E-03
P-32	1.00E+38	1.00E+38	1.00E+38	1.00E+38	1.00E+38	1.00E+38	1.93E+00	0.00E+00
P-33	1.00E+38	1.00E+38	1.00E+38	1.00E+38	1.00E+38	1.00E+38	1.33E+01	0.00E+00
S-35	1.00E+38	1.00E+38	1.00E+38	1.00E+38	1.00E+38	1.00E+38	1.97E+01	0.00E+00
CL-36	2.27E+01	2.50E+02	5.62E+03	1.66E+02	1.83E+03	4.13E+04	4.64E+00	0.00E+00
CA-45	1.00E+38	1.00E+38	1.00E+38	1.00E+38	1.00E+38	1.00E+38	1.28E+01	1.00E+38
SC-46	1.00E+38	1.00E+38	1.00E+38	1.00E+38	1.00E+38	1.00E+38	5.77E-02	1.44E-03
CR-51	1.00E+38	1.00E+38	1.00E+38	1.00E+38	1.00E+38	1.00E+38	3.54E-02	9.69E-02
MN-54	1.00E+38	1.00E+38	1.00E+38	1.00E+38	1.00E+38	1.00E+38	1.72E-01	3.51E-03
FE-55	1.00E+38	1.00E+38	1.00E+38	1.00E+38	1.00E+38	1.00E+38	5.19E+03	0.00E+00
FE-59	1.00E+38	1.00E+38	1.00E+38	1.00E+38	1.00E+38	1.00E+38	1.46E-01	2.44E-03
CO-57	1.00E+38	1.00E+38	1.00E+38	1.00E+38	1.00E+38	1.00E+38	9.59E-01	3.19E-02
CO-58	1.00E+38	1.00E+38	1.00E+38	1.00E+38	1.00E+38	1.00E+38	2.10E-01	3.57E-03
CO-60	1.00E+38	1.00E+38	1.00E+38	1.00E+38	1.00E+38	1.00E+38	4.62E-02	1.16E-03
NI-59	1.46E+05	1.00E+38	1.00E+38	1.00E+38	1.00E+38	1.00E+38	2.48E+03	0.00E+00
NI-63	1.00E+38	1.00E+38	1.00E+38	1.00E+38	1.00E+38	1.00E+38	9.97E+02	0.00E+00
ZN-65	1.00E+38	1.00E+38	1.00E+38	1.00E+38	1.00E+38	1.00E+38	2.71E-01	5.12E-03
SE-75	1.00E+38	1.00E+38	1.00E+38	1.00E+38	1.00E+38	1.00E+38	3.10E-01	9.00E-03
RB-86	1.00E+38	1.00E+38	1.00E+38	1.00E+38	1.00E+38	1.00E+38	1.87E+00	3.07E-02
SR-85	1.00E+38	1.00E+38	1.00E+38	1.00E+38	1.00E+38	1.00E+38	2.22E-01	5.78E-03
SR-89	1.00E+38	1.00E+38	1.00E+38	1.00E+38	1.00E+38	1.00E+38	3.29E+01	3.37E+02
SR-90	1.00E+38	1.00E+38	1.00E+38	1.00E+38	1.00E+38	1.00E+38	6.06E+00	9.33E+04
ZR-95	1.00E+38	1.00E+38	1.00E+38	1.00E+38	1.00E+38	1.00E+38	6.76E-02	1.94E-03
NB-94	1.00E+38	1.00E+38	1.00E+38	1.00E+38	1.00E+38	1.00E+38	7.43E-02	1.88E-03
NB-95	1.00E+38	1.00E+38	1.00E+38	1.00E+38	1.00E+38	1.00E+38	2.07E+01	3.81E-03
MO-99	1.00E+38	1.00E+38	1.00E+38	1.00E+38	1.00E+38	1.00E+38	3.01E+00	2.08E-02
TC-99	4.33E+01	4.77E+02	1.08E+04	3.18E+02	3.50E+03	7.89E+04	8.18E+03	1.00E+38
TC-99M	1.00E+38	1.00E+38	1.00E+38	1.00E+38	1.00E+38	1.00E+38	9.28E-01	3.04E-02
RU-103	1.00E+38	1.00E+38	1.00E+38	1.00E+38	1.00E+38	1.00E+38	4.46E-01	6.46E-03
RU-106	1.00E+38	1.00E+38	1.00E+38	1.00E+38	1.00E+38	1.00E+38	6.21E-01	1.61E-02
AG-108	1.00E+38	1.00E+38	1.00E+38	1.00E+38	1.00E+38	1.00E+38	7.89E-02	2.03E-03
AG-110	1.00E+38	1.00E+38	1.00E+38	1.00E+38	1.00E+38	1.00E+38	4.26E-02	1.08E-03
CD-109	1.00E+38	1.00E+38	1.00E+38	1.00E+38	1.00E+38	1.00E+38	4.22E+00	7.89E-02
SN-113	1.00E+38	1.00E+38	1.00E+38	1.00E+38	1.00E+38	1.00E+38	4.53E-01	1.21E-02
SN-126	3.73E+03	1.00E+38	1.00E+38	2.74E+04	1.00E+38	1.00E+38	5.83E-02	1.52E-03
SB-124	1.00E+38	1.00E+38	1.00E+38	1.00E+38	1.00E+38	1.00E+38	6.41E-02	1.61E-03
SB-125	1.00E+38	1.00E+38	1.00E+38	1.00E+38	1.00E+38	1.00E+38	1.08E+01	7.19E-03
I-125	1.00E+38	1.00E+38	1.00E+38	1.00E+38	1.00E+38	1.00E+38	2.71E+00	5.70E-02
I-129	1.65E-01	1.81E+00	4.00E+01	1.21E+00	1.33E+01	2.94E+02	3.87E+01	1.11E+00
I-131	1.00E+38	1.00E+38	1.00E+38	1.00E+38	1.00E+38	1.00E+38	5.77E+00	8.29E-03
CS-134	1.00E+38	1.00E+38	1.00E+38	1.00E+38	1.00E+38	1.00E+38	8.23E-02	1.90E-03
CS-135	8.22E+04	1.00E+38	1.00E+38	6.03E+05	1.00E+38	1.00E+38	1.58E+01	0.00E+00
CS-136	1.00E+38	1.00E+38	1.00E+38	1.00E+38	1.00E+38	1.00E+38	5.40E-02	1.38E-03
CS-137	1.00E+38	1.00E+38	1.00E+38	1.00E+38	1.00E+38	1.00E+38	1.99E-01	5.28E-03
BA-140	1.00E+38	1.00E+38	1.00E+38	1.00E+38	1.00E+38	1.00E+38	4.30E+00	1.71E-02
LA-140	1.00E+38	1.00E+38	1.00E+38	1.00E+38	1.00E+38	1.00E+38	5.13E-02	1.29E-03
CE-141	1.00E+38	1.00E+38	1.00E+38	1.00E+38	1.00E+38	1.00E+38	6.92E+00	4.84E-02
CE-144	1.00E+38	1.00E+38	1.00E+38	1.00E+38	1.00E+38	1.00E+38	2.46E+00	6.63E-02
EU-152	1.00E+38	1.00E+38	1.00E+38	1.00E+38	1.00E+38	1.00E+38	1.98E+00	2.89E-03
EU-154	1.00E+38	1.00E+38	1.00E+38	1.00E+38	1.00E+38	1.00E+38	1.02E-01	2.59E-03
YB-169	1.00E+38	1.00E+38	1.00E+38	1.00E+38	1.00E+38	1.00E+38	3.75E-01	1.27E-02
PB-210	1.00E+38	1.00E+38	1.00E+38	1.00E+38	1.00E+38	1.00E+38	4.60E-01	1.74E+00
PO-210	1.00E+38	1.00E+38	1.00E+38	1.00E+38	1.00E+38	1.00E+38	3.35E-02	1.64E+02
RN-222	1.00E+38	1.00E+38	1.00E+38	1.00E+38	1.00E+38	1.00E+38	5.77E-04	1.88E-03
RA-226	2.97E+01	1.58E+05	1.00E+38	2.18E+02	1.00E+38	1.00E+38	1.46E-01	5.67E-01
RA-228	1.00E+38	1.00E+38	1.00E+38	1.00E+38	1.00E+38	1.00E+38	1.27E-03	4.15E-03

AC-227	1.00E+38	1.00E+38	1.00E+38	1.00E+38	1.00E+38	1.00E+38	2.83E-03	1.01E-02
TH-228	1.00E+38	1.00E+38	1.00E+38	1.00E+38	1.00E+38	1.00E+38	6.43E-04	2.08E-03
TH-229	1.90E+02	1.00E+38	1.00E+38	1.39E+03	1.00E+38	1.00E+38	4.25E-03	1.49E-02
TH-230	6.84E+01	1.00E+38	1.00E+38	5.02E+02	1.00E+38	1.00E+38	3.80E-02	1.67E+01
TH-232	5.11E+01	1.00E+38	1.00E+38	3.75E+02	1.00E+38	1.00E+38	4.44E-02	0.00E+00
PA-231	2.74E+00	1.00E+38	1.00E+38	2.01E+01	1.00E+38	1.00E+38	2.41E-02	8.73E-02
U-232	1.00E+38	1.00E+38	1.00E+38	1.00E+38	1.00E+38	1.00E+38	3.35E-02	2.15E+01
U-233	1.80E+05	1.00E+38	1.00E+38	1.00E+38	1.00E+38	1.00E+38	3.68E-02	5.67E+01
U-234	1.75E+05	1.00E+38	1.00E+38	1.00E+38	1.00E+38	1.00E+38	4.30E+00	3.66E+01
U-235	1.56E+05	1.00E+38	1.00E+38	1.00E+38	1.00E+38	1.00E+38	1.40E+00	2.40E-02
U-236	1.75E+05	1.00E+38	1.00E+38	1.00E+38	1.00E+38	1.00E+38	3.96E-02	6.83E+01
U-238	1.63E+05	1.00E+38	1.00E+38	1.00E+38	1.00E+38	1.00E+38	2.34E+00	2.73E-01
NP-237	2.50E+01	1.00E+38	1.00E+38	1.83E+02	1.00E+38	1.00E+38	4.13E-03	1.63E-02
PU-236	1.00E+38	1.00E+38	1.00E+38	1.00E+38	1.00E+38	1.00E+38	3.08E-02	1.23E+02
PU-238	1.00E+38	1.00E+38	1.00E+38	1.00E+38	1.00E+38	1.00E+38	3.24E-02	1.64E+02
PU-239	5.45E+03	1.00E+38	1.00E+38	4.00E+04	1.00E+38	1.00E+38	3.44E-02	0.00E+00
PU-240	2.52E+04	1.00E+38	1.00E+38	1.85E+05	1.00E+38	1.00E+38	3.44E-02	1.36E+02
PU-241	1.00E+38	1.00E+38	1.00E+38	1.00E+38	1.00E+38	1.00E+38	3.18E+03	1.31E+04
PU-242	3.20E+03	1.00E+38	1.00E+38	2.35E+04	1.00E+38	1.00E+38	3.64E-02	1.39E+02
PU-244	3.09E+03	1.00E+38	1.00E+38	2.26E+04	1.00E+38	1.00E+38	3.48E-03	1.11E-02
AM-241	1.00E+38	1.00E+38	1.00E+38	1.00E+38	1.00E+38	1.00E+38	4.21E-02	2.34E-01
AM-243	1.34E+01	1.00E+38	1.00E+38	9.80E+01	1.00E+38	1.00E+38	4.11E-03	1.90E-02
CM-242	1.00E+38	1.00E+38	1.00E+38	1.00E+38	1.00E+38	1.00E+38	2.91E-02	3.72E+01
CM-243	1.00E+38	1.00E+38	1.00E+38	1.00E+38	1.00E+38	1.00E+38	7.70E-03	3.23E-02
CM-244	1.00E+38	1.00E+38	1.00E+38	1.00E+38	1.00E+38	1.00E+38	3.05E-02	3.01E+02
CM-248	2.67E+01	1.00E+38	1.00E+38	1.96E+02	1.00E+38	1.00E+38	3.51E-02	0.00E+00
CF-252	1.00E+38	1.00E+38	1.00E+38	1.00E+38	1.00E+38	1.00E+38	8.27E-01	1.32E+00

000559

6400

NRC FORM 335 (7-77)

U.S. NUCLEAR REGULATORY COMMISSION

BIBLIOGRAPHIC DATA SHEET

1. REPORT NUMBER (Assigned by DDC): NUREG/CR-3585, Vol. 1

4. TITLE AND SUBTITLE (Add Volume No., if appropriate): De Minimis Waste Impacts Analysis Methodology

2. (Leave blank)

3. RECIPIENT'S ACCESSION NO.

7. AUTHOR(S): O. I. Oztunali, Dames & Moore and G. W. Roles, NRC

5. DATE REPORT COMPLETED: MONTH December, YEAR 1983

9. PERFORMING ORGANIZATION NAME AND MAILING ADDRESS (Include Zip Code)

Dames & Moore
20 Haarlem Ave.
White Plains, NY 10603

DATE REPORT ISSUED: MONTH February, YEAR 1984

6. (Leave blank)

8. (Leave blank)

12. SPONSORING ORGANIZATION NAME AND MAILING ADDRESS (Include Zip Code)

Division of Waste Management
Office of Nuclear Material Safety and Safeguards
U. S. Nuclear Regulatory Commission
Washington, DC 20555

10. PROJECT/TASK/WORK UNIT NO.

11. CONTRACT NO.

13. TYPE OF REPORT: Formal

PERIOD COVERED (Inclusive dates)

15. SUPPLEMENTARY NOTES

14. (Leave blank)

16. ABSTRACT (200 words or less)

A calculational methodology is presented which can be used to estimate impacts from disposal of radioactive waste by less restrictive means ("de minimis" waste disposal). The methodology consists of two computer codes: one which determines annual radiological impacts to individuals and to populations from release of de minimis waste into less restrictive disposal pathways, and another which determines limiting concentrations of radionuclides based upon comparison with a set of individual dose limitation criteria. Operational impacts are calculated for de minimis waste transportation, treatment by incineration, and disposal. Long-term impacts after disposal (e.g., groundwater migration) are also calculated as are possible impacts from recycle of metal or glass. Alternatives for waste treatment/disposal include on-site, off-site as a municipal waste, and off-site as a hazardous waste.

17. KEY WORDS AND DOCUMENT ANALYSIS

radioactive waste disposal
de minimis waste
groundwater migration

17a. DESCRIPTORS

17b. IDENTIFIERS/OPEN-ENDED TERMS

IMPACTS
INVIMPS
COMPUTER CODES

18. AVAILABILITY STATEMENT: Unlimited

19. SECURITY CLASS (This report): Unclassified

20. SECURITY CLASS (This page): Unclassified

21. NO. OF PAGES

22. PRICE: $

NRC FORM 335 (7-77)

000560