6438 U-003-409 .7

DRAFT FEASIBILITY STUDY REPORT FOR OU1 TASK 15, DOE, OAK RIDGE OPERATIONS OFFICE, OAK RIDGE, TN - (USED AS A REFERENCE IN OU1 FS REPORT)

12/00/90

FMPC-1115-2
ASI DOE-ORO
~~600~~ 468
REPORT

FEASIBILITY STUDY REPORT FOR OPERABLE UNIT 1

TASK 15 REPORT

FEED MATERIALS PRODUCTION CENTER
FERNALD, OHIO

REMEDIAL INVESTIGATION and FEASIBILITY STUDY

December 1990

U.S. DEPARTMENT OF ENERGY
OAK RIDGE OPERATIONS OFFICE

DRAFT

6438

FEASIBILITY STUDY REPORT FOR OPERABLE UNIT 1

DRAFT

TASK 15 REPORT

FEED MATERIALS PRODUCTION CENTER
FERNALD, OHIO

REMEDIAL INVESTIGATION and FEASIBILITY STUDY

December 1990

U.S. DEPARTMENT OF ENERGY
OAK RIDGE OPERATIONS OFFICE
FMPC-0115-2

DRAFT

000002

TABLE OF CONTENTS

	Page
List of Tables	vii
List of Figures	viii
List of Acronyms	ix
Distribution List	x
Executive Summary	ES-1
1.0 Introduction	1-1
1.1 Purpose and Organization of Report	1-3
1.2 Background Information	1-7
1.2.1 Site Description	1-7
1.2.2 Site History	1-10
1.2.3 Nature and Extent of Contamination	1-15
1.2.4 Contaminant Fate and Transport	1-19
1.2.5 Baseline Risk Assessment	1-20
2.0 Identification and Screening of Technologies	2-1
2.1 Introduction	2-1
2.2 Remedial Action Objectives	2-1
2.2.1 Point of Compliance	2-2
2.2.2 Contaminants of Concern	2-3
2.2.3 Remedial Action Objectives Based on Applicable or Relevant and Appropriate Requirements	2-3
2.2.4 Remedial Action Objectives Based on Risk Criteria	2-5
2.2.5 Summary of Operable Unit 1 Remedial Action Objectives	2-8
2.2.5.1 Pit Waste	2-8
2.2.5.2 Air	2-8
2.2.5.3 Soils	2-8
2.2.5.4 Sediment	2-8
2.2.5.5 Surface Water	2-8
2.2.5.6 Groundwater	2-13
2.3 General Response Actions	2-13
2.3.1 No Action	2-13
2.3.2 Institutional Actions	2-13
2.3.3 Containment	2-13
2.3.4 Removal/Disposal	2-13
2.3.5 Containment/Treatment	2-18
2.3.6 Removal/Treatment/Disposal	2-18
2.4 Identification and Screening of Technologies and Process Options	2-19

DRAFT

TABLE OF CONTENTS
(Continued)

	Page
2.4.1 Screening Criteria	2-20
2.4.2 Identification and Screening of Technologies	2-20
2.4.2.1 Initial Screening: Perched Groundwater, Standing Water, and Excavation/Remediation Water	2-20
2.4.2.2 Initial Screening: Soils, Sediments, and Pit Waste	2-28
2.4.2.3 Initial Screening: Air (Fugitive Dust)	2-32
2.4.3 Technology Issues	2-34
2.4.3.1 Nonremoval Technology Issue 1: Naturally Occurring Materials Versus Synthetic Closure Cap Components	2-34
2.4.3.2 Nonremoval Technology Issue 2: Physical Stabilization Versus No Stabilization of the Pit Waste	2-35
2.4.3.3 Nonremoval Technology Issue 3: Dynamic Compaction as a Physical Stabilization Technology	2-37
2.4.3.4 Nonremoval Technology Issue 4: The Addition of Shallow Soil Mixing Technology to Physical Stabilization Options	2-39
2.4.3.5 Removal Technology Issue 1: Off-Site Waste Disposal - Trucking Versus Railroad Transport	2-40
2.4.4 Site Condition Assumptions	2-43
2.5 Evaluation of Technologies and Selection of Representative Technologies and Process Options	2-43
2.5.1 Screening Criteria	2-43
2.5.1.1 Effectiveness Evaluation	2-48
2.5.1.2 Implementability Evaluation	2-48
2.5.1.3 Cost Evaluation	2-48
3.0 Development and Screening of Alternatives	3-1
3.1 Development of Alternatives	3-1
3.1.1 Alternative 0 - No Action	3-6
3.1.1.1 Description	3-6
3.1.2 Alternative 1 - Nonremoval, Slurry Wall, and Cap	3-6
3.1.2.1 Description	3-6
3.1.2.2 System Requirements	3-9
3.1.2.3 Size and Configuration	3-9
3.1.2.4 Remediation Time Frame	3-9
3.1.2.5 Spatial Requirements	3-9
3.1.2.6 Packaging/Transportation Requirements	3-10
3.1.2.7 Waste Generated	3-10
3.1.3 Alternative 2 - Nonremoval, Physical Stabilization, Slurry Wall, and Cap	3-10

DRAFT

TABLE OF CONTENTS
(Continued)

	Page
3.1.3.1 Description	3-10
3.1.3.2 System Requirements	3-12
3.1.3.3 Size and Configuration	3-12
3.1.3.4 Remediation Time Frame	3-13
3.1.3.5 Spatial Requirements	3-13
3.1.3.6 Packaging/Transportation Requirements	3-13
3.1.3.7 Waste Generated	3-13
3.1.4 Alternative 3 - Nonremoval, In Situ Vitrification, and Cap	3-13
3.1.4.1 Description	3-13
3.1.4.2 System Requirements	3-15
3.1.4.3 Size and Configuration	3-15
3.1.4.4 Remediation Time Frame	3-15
3.1.4.5 Spatial Requirements	3-15
3.1.4.6 Packaging/Transportation Requirements	3-16
3.1.4.7 Waste Generated	3-16
3.1.5 Alternative 4 - Removal, Waste Treatment, and On-Property Disposal	3-16
3.1.5.1 Description	3-16
3.1.5.2 System Requirements	3-17
3.1.5.3 Size and Configuration	3-18
3.1.5.4 Remediation Time Frame	3-18
3.1.5.5 Spatial Requirements	3-18
3.1.5.6 Packaging/Transportation Requirements	3-18
3.1.5.7 Waste Generated	3-18
3.1.6 Alternative 5 - Removal, Waste Treatment, and Off-Site Disposal	3-18
3.1.6.1 Description	3-18
3.1.6.2 System Requirements	3-19
3.1.6.3 Size and Configuration	3-19
3.1.6.4 Remediation Time Frame	3-19
3.1.6.5 Spatial Requirements	3-20
3.1.6.6 Packaging/Transportation Requirements	3-20
3.1.6.7 Waste Generated	3-20
3.2 Initial Screening of Alternatives	3-20
3.2.1 Screening Criteria	3-20
3.2.1.1 Alternative Evaluation Process	3-20

DRAFT

TABLE OF CONTENTS
(Continued)

		Page
	3.2.1.2 Effectiveness Evaluation	3-22
	3.2.1.3 Implementability and Reliability Evaluation	3-22
	3.2.1.4 Cost Evaluation	3-23
	3.2.1.5 Innovative Technologies	3-23
	3.2.1.6 Compliance with Applicable or Relevant and Appropriate Requirements	3-23
3.2.2	Alternative 0 - No Action	3-30
	3.2.2.1 Effectiveness	3-30
	3.2.2.2 Implementability	3-30
	3.2.2.3 Cost	3-31
	3.2.2.4 Screening Summary	3-31
3.2.3	Alternative 1 - Nonremoval, Slurry Wall, and Cap	3-31
	3.2.3.1 Effectiveness	3-31
	3.2.3.2 Implementability	3-32
	3.2.3.3 Cost	3-33
	3.2.3.4 Screening Summary	3-33
3.2.4	Alternative 2 - Nonremoval, Physical Stabilization, Slurry Wall, and Cap	3-33
	3.2.4.1 Effectiveness	3-33
	3.2.4.2 Implementability	3-34
	3.2.4.3 Cost	3-34
	3.2.4.4 Screening Summary	3-34
3.2.5	Alternative 3 - Nonremoval, In Situ Vitrification, and Cap	3-35
	3.2.5.1 Effectiveness	3-35
	3.2.5.2 Implementability	3-35
	3.2.5.3 Cost	3-36
	3.2.5.4 Screening Summary	3-36
3.2.6	Alternative 4 - Removal, Waste Treatment, and On-Property Disposal	3-37
	3.2.6.1 Effectiveness	3-37
	3.2.6.2 Implementability	3-38
	3.2.6.3 Cost	3-38
	3.2.6.4 Screening Summary	3-38
3.2.7	Alternative 5 - Removal, Waste Treatment, and Off-Site Disposal	3-39
	3.2.7.1 Effectiveness	3-39
	3.2.7.2 Implementability	3-39
	3.2.7.3 Cost	3-40

DRAFT

TABLE OF CONTENTS
(Continued)

	Page
3.2.7.4 Screening Summary	3-40
4.0 Detailed Analysis of Remedial Alternatives	4-1
4.1 Introduction	4-1
4.2 Individual Analysis of Alternatives	4-2
4.2.1 Alternative 0 - No Action	4-2
4.2.1.1 Description	4-2
4.2.1.2 Assessment	4-2
4.2.2 Alternative 2 - Nonremoval, Physical Stabilization, Slurry Wall, and Cap	4-3
4.2.2.1 Description	4-3
4.2.2.2 Assessment	4-5
4.2.3 Alternative 4A - Removal, Waste Treatment (Cement Stabilization), and On-Property Disposal	4-9
4.2.3.1 Description	4-9
4.2.3.2 Assessment (Alternative 4A)	4-18
4.2.4 Alternative 4B - Removal, Waste Treatment (Vitrification), and On-Property Disposal	4-20
4.2.4.1 Description	4-20
4.2.4.2 Assessment	4-20
4.2.5 Alternative 5A - Removal, Waste Treatment (Cement Stabilization), and Off-Site Disposal	4-23
4.2.5.1 Description	4-23
4.2.5.2 Assessment	4-23
4.2.6 Alternative 5B - Removal, Waste Treatment (Vitrification), and Off-Site Disposal	4-25
4.2.6.1 Description	4-25
4.2.6.2 Assessment	4-25
4.3 Comparative Analysis	4-26
4.3.1 Overall Protection of Human Health and the Environment	4-27
4.3.2 Compliance with ARARs	4-28
4.3.3 Long-Term Effectiveness and Permanence	4-28
4.3.4 Reduction of Toxicity, Mobility, or Volume through Treatment	4-29
4.3.5 Short-Term Effectiveness	4-30
4.3.6 Implementability	4-33
4.3.7 Cost	4-35
4.4 Overall Summary of the Detailed Analysis of Alternatives	4-35
Bibliography	

DRAFT

TABLE OF CONTENTS
(Continued)

Appendix A - Description of Technologies and Process Options

Appendix B - Public Health and Occupational Risk Consideration for the Operable Unit 1 Feasibility Study at the Feed Materials Production Center

Appendix C - Waste Pits, Burn Pit, and Clearwell Characteristics

Appendix D - Applicable or Relevant and Appropriate Requirements (ARARs)

Appendix E - Packaging/Transportation

Appendix F - Detailed Cost Estimates

DRAFT

LIST OF TABLES

Table	Title	Page
ES-1	Costs Summary	ES-10
1-1	Summary of FMPC Derived Pit Information	1-11
2-1	Chemicals of Concern for Operable Unit 1	2-4
2-2	Operable Unit 1 ARARs	2-6
2-3	Remedial Action Objectives for Protection of Aquatic Life in Surface Waters	2-12
2-4	Operable Unit 1 Groundwater Remedial Action Objectives for Radionuclides	2-14
2-5	Operable Unit 1 Groundwater Remedial Action Objectives for Inorganic Chemicals	2-15
2-6	Operable Unit 1 Groundwater Remedial Action Objectives for Organic Chemicals	2-16
2-7	Risk Factors for Waste Transportation - Operable Unit 1	2-41
2-8	Operable Unit 1 Risk of Transporting Waste	2-42
3-1	Alternative Rankings	3-41
4-1	Individual Analysis of Final Alternative	4-38
4-2	Comparative Analysis Summary	4-42

DRAFT

LIST OF FIGURES

Figure	Title	Page
ES-1	Costs for Alternatives	ES-11
1-1	Five-Mile Radius Map, Feed Materials Production Center	1-2
1-2	Source Operable Units	1-4
1-3	Feasibility Study Logic Flow Diagram	1-6
1-4	Major Features of the FMPC	1-8
1-5	Waste Storage Area	1-9
2-1	Remedial Action Objectives and Associated General Response Actions	2-9
2-2	Initial Screening of Technologies and Process Options	2-21
2-3	Typical Cross Section Before/After Closure	2-36
2-4	Typical Cross Section During Surcharging	2-38
2-5	Evaluation of Process Options	2-44
3-1	General Alternative Development Process	3-2
3-2	Multi-Layered Cap Plan View	3-8
3-3	Relationship of Screening Criteria to the Nine Evaluation Criteria	3-21
3-4	General Procedure for Identification of ARARs	3-25
3-5	General Procedure for Determining if Requirement is Applicable	3-26
3-6	General Procedure for Determining if Requirement is Relevant and Appropriate	3-28
4-1	Water Treatment Flowsheet - Alternative 2	4-4
4-2	HELP Model Input Parameters	4-6
4-3	HELP Analysis Results Using Default Climatological Data (1974 through 1978) and Soil Characteristics	4-8
4-4	Plan View of Remediation Facilities - Alternatives 4 and 5	4-10
4-5	Conceptual View of Remediation Facilities - Alternatives 4 and 5	4-11
4-6	Water Treatment Flowsheet - Alternatives 4 and 5	4-12
4-7	Waste Segregation Facility Lay-Out for Alternatives 4 and 5	4-13
4-8	Grout Processing Flowsheet - Alternatives 4B and 5B	4-14
4-9	Hydraulic or Pneumatic Removal - Alternatives 4 and 5	4-15
4-10	Plan View of Excavation Process - Alternatives 4 and 5	4-16
4-11	Vitrification Processing Flowsheet - Alternatives 4B and 5B	4-21
4-12	Costs for Alternatives	4-36
A-1	Tumulus Section	A-13
A-2	Greater Confinement Disposal Vault Facility (GCD)	A-14
A-3	GCD With Structural Slab and Vault Placed Above Grade	A-15

DRAFT

LIST OF ACRONYMS

AEA	Atomic Energy Act
ALARA	as low as reasonably achievable
ARARs	Applicable or Relevant and Appropriate Requirements
ASTM	American Society for Testing and Materials
AWQC	Ambient Water Quality Criteria
CAA	Clean Air Act
CERCLA	Comprehensive Environmental Response, Compensation, and Liability Act
CFR	Code of Federal Regulations
CIS	Characterization Investigation Study
COE	U.S. Army Corps of Engineers
CWA	Clean Water Act
DCG	derived concentration guides
DOD	U.S. Department of Defense
DOE	U.S. Department of Energy
DOT	U.S. Department of Transportation
EA	environmental assessment
EPA	U.S. Environmental Protection Agency
EPDM	ethylene-propylene-diene monomer
EP Toxicity	Extraction Procedure Toxicity
FEIS	Final Environmental Impact Statement
FFCA	Federal Facilities Compliance Agreement
FML	flexible membrane liners
FMPC	Feed Materials Production Center
FR	Federal Register
LC/DS	leachate collection/detection systems
LLW	low-level waste
LSA	low-specific activity
MCL	maximum contaminant level
MCLG	maximum contaminant level goal
MPRSA	Marine Protection Research and Sanctuaries Act
NAAQS	National Ambient Air Quality Standards
NARM	Naturally-Occurring and Accelerator-Produced Radioactive Material
NCP	National Oil and Hazardous Substances Pollution Contingency Plan
NEPA	National Environmental Policy Act
NESHAP	National Emission Standards for Hazardous Air Pollutants
NPDES	National Pollutant Discharge Elimination System

DRAFT

LIST OF ACRONYMS
(Continued)

NRC	U.S. Nuclear Regulatory Commission
NTS	Nevada Test Site
ODH	Ohio Department of Health
ODNR	Ohio Department of Natural Resources
OEPA	Ohio Environmental Protection Agency
OSHA	Occupational Health and Safety Administration
OSWER	Office of Solid Waste and Emergency Response
QA/QC	Quality Assurance/Quality Control
RA	risk assessment
RA/RI	Remedial Action/Remedial Investigation
RCRA	Resource Conservation and Recovery Act
RI/FS	Remedial Investigation/Feasibility Study
ROD	Record of Decision
SARA	Superfund Amendments and Reauthorization Act
SCO	Surface Contaminated Object
SDWA	Safe Drinking Water Act
SSM	Shallow Soil Mixing
TBC	to be considered
TSCA	Toxic Substances Control Act
UIC	Underground Injection Control
USC	U.S. Code
WMCO	Westinghouse Materials Company of Ohio

DRAFT

DISTRIBUTION LIST

Project Director - John Wood, Fernald
Deputy Director/Technical - John Razor, Fernald
Technical Manager - Bob Galbraith, Fernald
Operable Unit/Task Managers - Linda Dolan, Knoxville
Mike Higgins, Knoxville
Robin Smith, Pittsburgh
Sam Wolinsky, Fernald
Dan Smith, Oak Ridge
Project QA Officer - Larry Sexton, Fernald
Technical QA Officer - Don Mack, Knoxville
Site Project Files - Fernald
IT-Monroeville Project Central Files
IT-Knoxville Project Central Files
ASI-Oak Ridge Project Files

DOE COR - Bobby Davis, Fernald
WMCO - Pat Hopper, Fernald
Lee Wan & Associates - M. Neal, Fernald

DOE-HQ - Randi Allen, Washington, DC
Lisa Feldt, Washington, DC
Carolyn Osborne
U.S. Environmental Protection Agency, Region V

DRAFT

EXECUTIVE SUMMARY

EXECUTIVE SUMMARY

On March 9, 1985, the U.S. Environmental Protection Agency (EPA) issued a Notice of Noncompliance to the U.S. Department of Energy (DOE) identifying EPA's major concerns about potential environmental impacts associated with the Fernald, Ohio, Feed Materials Production Center's (FMPC's) past and present operations. On July 18, 1986, DOE and EPA jointly signed a Federal Facility Compliance Agreement (FFCA) pertaining to environmental impacts associated with the FMPC. In response to the FFCA, a site-wide Remedial Investigation and Feasibility Study (RI/FS) was initiated pursuant to the Comprehensive Environmental Response, Compensation, and Liability Act (CERCLA), as amended by the Superfund Amendments and Reauthorization Act (SARA). The RI/FS is an established EPA procedure used to identify and select an action plan for the cleanup of CERCLA sites.

A Work Plan for the site-wide RI/FS was originally issued to EPA in December 1986. After a series of technical discussions and negotiations, Revision 3 of the RI/FS Work Plan was submitted in March 1988 and received EPA approval in May 1988. A detailed FS work plan was subsequently prepared and submitted to EPA on August 15, 1988.

The RI/FS work has been performed in phases. To expedite the work, directions were given to perform the RI and FS segments of the work at the same time. The normal process is to first complete the RI and then proceed to the FS. The draft RI was completed in September 1990. The first phase of the FS was the development of alternatives for the entire site. A report was issued in December 1988.

On April 9, 1990 DOE and EPA Region V amended the 1986 FFCA by a Federal Facility Consent Agreement (Consent Agreement) to achieve overall consistency in the program including the operable unit concept. The Consent Agreement, persuant to CERCLA Sections 120 and 106 (a), became effective June 1990.

In line with the operable unit concept, the second phase was to redefine the development and initial screening of alternatives for each operable unit. For Operable Unit 1, a first internal draft of this effort was issued in March 1990. This was followed by a second internal draft in June 1990. The first submittal of the Initial Screening of Alternatives Report to EPA occurred in July 1990 followed by a subsequent revised document in October 1990.

The FMPC site has been divided into five operable units. Operable units are distinctive groupings of facilities and environmental media that will enable DOE to expedite remedial actions on the highest priority operable units while awaiting necessary data and related analyses on other operable units. These operable units are: (1) Waste Pits 1 through 6, Clearwell, Burn Pit, (2) other waste units, (3) production facilities and suspect areas, (4) Silos 1, 2, 3, and 4 and (5) environmental media.

Scope of Operable Unit 1

Operable Unit 1 includes Waste Pits 1 through 6, the Burn Pit, and the Clearwell. It also includes any contaminated perched groundwater, excavation/remediation water, and standing water. Surface/storm water from this operable unit will be controlled and treated by an already approved program.

The revised approximate volumes of material requiring remediation within this operable unit are as follows:

- Waste Pit 1: 135,000 cubic yards
- Waste Pit 2: 75,000 cubic yards
- Waste Pit 3: 318,000 cubic yards
- Waste Pit 4: 203,000 cubic yards
- Waste Pit 5: 343,000 cubic yards
- Waste Pit 6: 91,000 cubic yards
- Burn Pit: 26,000 cubic yards
- Clearwell: 37,000 cubic yards

In addition to this material, there are approximately 750,000 gallons of water in Pit 5, an unknown volume of water in Pit 6, and approximately 627,000 gallons of water in the Clearwell.

Extent of Contamination in Waste Pits

The FS report is based on the detailed findings of the RI report and other referenced available information, a summary of the principal contaminants of concern is given below.

- Radiological contamination:

  - Uranium was detected in varying amounts in all the samples from the borings in the waste pits. Uranium-238 was highest in samples collected from Pit 6; it ranged from 12,500 to 18,700 picoCuries/gram (pCi/g), respectively. Pits 2 and 4 also exhibited fairly high concentrations of U-238 at 17,900 and 15,800 pCi/g, respectively. Uranium-234 and U-235 were similarly higher in samples containing high concentrations of U-238 (Table 4-1).

  - Thorium-230 is also a dominant radionuclide in the waste pits. The highest concentration of 21,900 pCi/g was in a sample collected from Pit 3. Samples

from Pit 5 showed concentrations ranging from 3080 to 20,200 pCi/g. Technetium-99 was detected in Pits 2, 3, and 5 at maximum concentrations of 618, 1110, and 2990 pCi/g, respectively. Radium-226 was high in samples collected from the Clearwell and Pit 5 with concentrations up to 458 and 999 pCi/g, respectively.

D. Inorganic contamination:

- Aluminum - Aluminum was found in measurable amounts in all the samples collected from the waste pits with concentration levels ranging from 1703 to 64,100 parts per million (ppm).

- Barium - The average background concentration for barium is 420 ppm. The highest concentration level for barium was 36,939 ppm, collected from Pit 5. All samples collected from this pit had relatively high barium concentrations ranging from 15,800 to 36,939 ppm, which is well above the background level. All but one sample collected from Pit 3 exceeded the average background concentration. All three samples collected from the Clearwell exceeded the average background concentration. Also all four samples collected from Pit 4 exceeded the average background concentration level. But, out of six samples collected from the Burn Pit, only one sample exceeded the average background with a concentration of 7097 ppm. Samples collected from Pits 1, 2, and 6 contained barium in concentrations below background levels (Table 4-2).

- Calcium - All the samples collected from Pit 5 had more than 100,000 ppm, the highest concentration being 206,144 ppm. There is at least one sample in each waste pit, except Pit 6, that exceeds the average background concentration of 57,000 ppm. Most of these concentration levels are in excess of 100,000 ppm. Pits 3, 5, and the Clearwell appear to have more calcium than other pits.

- Fluoride - Fluoride was found in very high concentration levels in all the samples, with the highest concentration being 124,476 ppm. Only Pit 4 was analyzed for this constituent.

- Iron - Samples collected from Pits 2, 3, and the Clearwell seem to have a relatively higher concentration level of iron than the others with the highest amount being 26,919 ppm. However, only one sample from Pit 3 exhibits iron concentrations above the average background of 25,000 ppm.

- Magnesium - Magnesium in the samples collected from Pit 5 is in elevated concentration levels that exceed the background range of 50 to 50,000 ppm (Shacklette and Boerngen 1984) with the highest level being 63,200 ppm. Three out of the six samples collected from Pit 5 exceeded the average background concentration of 4600 ppm. Samples collected from Pits 1, 2, and 4 and the Clearwell do not exceed the background range but are above the average background concentration. Only one out of six samples from the Burn Pit is more than 50,000 ppm; the rest are below the background range but above the average background concentrations. Similarly only one sample collected from Pit 3 was above the average background range, and the rest were within background concentration range but above the average background concentration. Overall, all the samples contained magnesium in concentrations that exceeded the average background level.

Other inorganic constituents are summarized in Appendix C. Arsenic in some of the samples collected from Pits 3 and 5 by far exceeds the average background concentration of 7.4 ppm. Cobalt in some samples exceeded the average background concentration of 9.2 ppm. Copper was found in some samples from Pits 3 and 5 to be above the average background concentration of 22.0 ppm. Lead in two out of six samples collected from Pit 3 exhibited concentrations of 340 and 613 ppm that exceeded the average background concentration of 17 ppm. Silver was found to be in two samples from Pit 4 and the Burn Pit to be in concentrations of 444 and 506 ppm, respectively, above the average background. Vanadium was in concentrations above the average background in all the samples collected from Pit 5 and in three samples collected from Pit 3.

Organics - Volatiles HSL

Samples from Pits 1, 2, 3, 4, and 6 exhibited relatively higher concentrations of volatile organics than those from other pits (Table 4-4). Pit 6 had the highest acetone concentration; ranging from 760 to 3200 parts per billion (ppb). Pit 3 had the highest butanone concentration of 4320 ppb. Methylene chloride was found in measurable amounts in all the pits. Pit 4 contained tetrachloroethene in concentrations ranging between 530 and 30,000 ppb. Pit 6 contained 1,1,2,2-tetrachloroethane in amounts as high as 29,000 ppb.

Organics - Semivolatiles HSL

Fluoranthene, naphthalene, phenanthrene, pyrene, and ethylhexyl phthalate appeared to be in higher concentrations than the other semivolatiles detected in the pits. Fluoranthene and naphthalene were highest in Pit 2 with a concentration range of 160 to 2300 and 90 to 80,000 ppb, respectively. Phenanthrene and pyrene were highest in Pit 4 with concentration ranges of 110 to 2730 and 93 to 1820 ppb, respectively. Ethylhexyl phthalate was highest in concentrations in Pit 5 and pentachlorophenol was highest in the Burn Pit.

Pesticides - HSL

Polychlorinated biphenyls (PCBs) were detected in all the pits with the highest amounts in samples from Pit 1 ranging between 3500 and 10,000 ppb. Samples collected from Pits 2 and 3 had PCBs in concentrations ranging from 321 to 1800 and 99 to 1344 ppb, respectively. Samples from the Burn Pit contained PCBs in the range of 70 to 2700 ppb. Pits 1 and 2 contained DDT at concentrations ranging from 16 to 1600 ppb. Herbicides were found in Pit 4 with a concentration ranging between 82 and 2793 ppb.

DRAFT

Geotechnical Information

The results of the geotechnical analysis show that most of the materials can be classified as sandy silts of low plasticity with the exception of Pit 1, which classifies as gravely clay, and the Burn Pit residue, which classifies as a sandy silt. Samples collected from Pits 1, 2, 3, and 5 and the Clearwell showed characteristics of plasticity. Those from Pits 4 and 6 were nonplastic. The Burn Pit had a mixture of plastic and nonplastic. The color of the material is grayish brown. Details of the full analysis and a complete list of the geotechnical results are contained in the Roy F. Weston Report (1987b).

Baseline Risk Assessment

A baseline risk assessment was carried out. Current and future chemicals of concern include isotopes of uranium, technetium, strontium, barium, magnesium, manganese, acetone, 2-butanone, methylene chloride, phenol, 1,1,1-trichloroethane, chloroform, ethyl parathion, methyl parathion, and toluene. Other radionuclides and chemicals were detected at above-background concentrations in the waste pits. However, the receptor will not be exposed to these pit constituents in current or future exposure scenarios. These chemicals are listed in the remedial investigation report for Operable Unit 1.

The risk assessment determined that three exposure pathways are of current potential concern:

- Inhalation exposure to airborne emissions from dry areas of Waste Pits 5 and 6
- Ingestion exposure to Paddys Run sediments that have been contaminated by surface water runoff from Operable Unit 1
- Ingestion exposure to groundwater and food crops irrigated with groundwater that has been contaminated by surface water runoff and leakage from Operable Unit 1

The cancer risk to the reasonable maximally exposed (RME) associated with the airborne emission pathway is 3×10^{-5}. The RME individual for the sediment ingestion pathway is a child whose lifetime cancer risk is 9×10^{-7}. The cancer risk to the RME associated with surface water runoff contamination of groundwater is 3×10^{-4}. The total estimated lifetime cancer risk associated with these pathways is 3×10^{-4} for a hypothetical RME individual.

A fourth exposure pathway was identified for the future exposure scenario. Waste pit constituents may migrate through the vadose zone into the underlying regional aquifer. The RME under current land-use conditions is located at the southeastern FMPC property boundary. This individual would have a lifetime cancer risk of 2.5×10^{-2} for radiocarcinogenicity and 1.4×10^{-7} for chemical carcinogenicity.

Under future land-use conditions, security control measures may be lost. Therefore, the RME could reside alongside Operable Unit 1. The RME under future land-use conditions would have a lifetime risk of 1.0 for radiocarcinogenicity and 9.8 x 10^{-7} for chemical carcinogenicity from this exposure pathway. The risk to this RME would be the same as that to the current RME for the surface water runoff and the sediment pathways. Because of the vegetative growth expected in the future on Waste Pits 5 and 6, the airborne emissions pathway is not a concern in the 100- to 500-year exposure scenario.

Remedial Action Objectives

Remedial action objectives (RAOs) are medium-specific cleanup goals for protecting human health and the environment. They address the contaminants of concern as well as exposure routes and receptors identified in the baseline risk assessment. The primary purposes of RAOs are to ensure site-wide compliance with:

- Chemical-specific applicable or relevant and appropriate requirements (ARARs) and to be considered (TBC) guidelines
- EPA guidance for risk to public health from hazardous chemicals
- Regulatory standards for control of radiation and radioactivity in the environment

To accomplish these objectives, each operable unit at the FMPC is subject to a unit-specific action level of 25 percent of each site-wide limit, unless it can be demonstrated that the collective impact of operable units throughout the FMPC will not exceed the site-wide limit. This serves as the basis for operable unit-specific action levels to ensure compliance with site-wide RAOs. If it is impractical to achieve an operable unit-specific action level, it may be revised to the extent that it does not result in failure to comply with the site-wide RAO. The remediation goals for Operable Unit 1, which are based on the action level of 25 percent of the site-wide chemical-specific RAO, must cover all constituents (radiological and chemical) that contribute to an RME from the operable unit. Alternatives for remediation must meet airborne RAOs at a point immediately adjacent to the waste pits or at a location determined by an RME scenario to be of greatest risk to human and environmental receptors, as well as drinking water RAOs in the aquifer that might be encountered directly below the Operable Unit 1.

RAOs were developed based on chemical-specific ARARs. Moreover, site-specific RAOs were developed based on risk analysis and radiological analyses for the pathways. The media for which RAOs were developed included: direct radiation, air, soils, sediments and surface water, perched groundwater, and operable unit wastes. Operable unit-specific action levels that apply RAOs are presented in Figure 2-1.

General Response Actions

General response actions (broad categories of media-specific remediation actions) that satisfy one or more of the RAOs were established. For Operable Unit 1, these general response actions included a no action response, institutional action, containment with and without treatment, and removal with treatment and disposal.

Identification and Initial Screening of Technologies and Process Options

Technologies potentially capable of satisfying the applicable RAOs were identified for each general response action. These technology groups were further broken down into various process options. The process options and technologies were then screened initially on the basis of technical implementability, effectiveness, and cost.

The technologies and process options remaining from the screening process were combined to assemble an initial list of six alternatives for remediation. In general, all the alternatives fall into one of three broad categories:

- No action
- Containment option that includes little or no treatment but provides some protection of human health and environment
- Treatment options that range from one eliminating (or minimizes) the need for long-term management on site to one reducing the toxicity, mobility, or volume of contaminants

The six alternatives developed were:

- Alternative 0: No action
- Alternative 1: Nonremoval, slurry wall, and cap
- Alternative 2: Nonremoval, physical stabilization, slurry wall, and cap
- Alternative 3: Nonremoval, vitrification, and cap
- Alternative 4: Removal, waste treatment, and on-property disposal
- Alternative 5: Removal, waste treatment, and off-site disposal

The cost and ranking of these alternatives is shown in Table 3-1 in Section 3.0. The process was kept flexible for further refinement of these alternatives.

Detailed Analysis of Alternatives for Remediation

The following alternatives for remediation were retained and refined in the detailed analysis of alternatives:

- Alternative 0: No action
- Alternative 2: Nonremoval, physical stabilization, slurry wall, and cap
- Alternative 4A: Removal, waste treatment (concrete stabilization), and on-property disposal
- Alternative 4B: Removal, waste treatment (vitrification), and on-property disposal
- Alternative 5A: Removal, waste treatment (concrete stabilization), and off-site disposal
- Alternative 5B: Removal, waste treatment (vitrification), and off-site disposal

Each alternative retained for detailed analysis and presentation has been evaluated against a range of factors and has been compared to the others. The criteria used for the detailed analysis included the nine CERCLA requirements mentioned below:

- Overall protection of human health and the environment
- Compliance with ARARs
- Long-term effectiveness and permanence
- Reduction of toxicity, mobility, and volume through treatment
- Short-term effectiveness
- Implementability
- Cost
- State acceptance (This criterion is assessed following comment on the RI/FS report and the proposed plan.)
- Community acceptance (This criterion is assessed following comment on the RI/FS report and the proposed plan.)

A summarized assessment of the alternatives is given in the following paragraphs.

Alternative 0: No Action

Under this alternative, there is a potential for the contaminants to migrate via the surface water or groundwater to the site receptors. Except for implementability, this alternative does not meet any of the other CERCLA requirements.

Alternative 2: Nonremoval, Physical Stabilization, Slurry Wall, and Cap

- Overall protection of human health and the environment - This was accomplished by reducing the potential for migration of the contaminants.
- Compliance with ARARs - Accomplished.

- Long-term effectiveness and permanence - Direct exposure from the contaminants prevented by the cap. The cap does require continuous surveillance and maintenance. There is the potential for contaminant migration through groundwater. Monitoring wells are required to detect any leachate migration. Review is required every five years in accordance with CERCLA Section 121(c).

- Reduction of toxicity, mobility, and volume through treatment - Compaction of waste reduces the volume and the void space and, therefore, reduces the potential for leachate generation. The toxicity of the waste is unaffected.

- Short-term effectiveness - Absence of waste handling minimizes threat to workers and the community. Environmental impacts are fugitive dust, construction-related traffic congestion, noise, smoke/fumes, and odors. Additional environmental impacts are changing the course of Paddys Run, turbidity in the surface waters, Paddys Run biota, adjoining grass and habitat, and groundwater flow diversion due to slurry wall construction.

- Implementability - The implementation of this alternative does not pose any technical problems.

Alternative 4A: Removal, Waste Treatment (Cement Stabilization), and On-Property Disposal:

- Overall protection of human health and the environment - Waste is removed and treated, thereby eliminating migration of contaminants to a receptor.

- Compliance with ARARs - Accomplished.

- Long-term effectiveness and permanence - The residual risk of on-property disposal is far less than the baseline residual risk. All RAOs for direct radon emission, groundwater contamination, and erosion of contaminated soil are met. The surveillance and monitoring requirements are the same as Alternative 2. Additionally, provision has to be made for the detection, collection, and testing of leachate.

- Reduction of toxicity, mobility, and volume through treatment - Stabilization supplemented by disposal in an engineered disposal facility, reduces the mobility of the contaminants but increases the volume by approximately 30 percent because stabilizing agents are added to the waste material. The probability of leachate generation is very low.

- Short-term effectiveness - Because of waste removal, there is an increased probability of accidentally releasing uranium, thorium, and radon. With the exception of Paddys Run, the other environmental impacts are the same as Alternative 2. Due to material removal/stabilization and emplacement in the constructed engineered disposal facility, the potential for environmental impact is greater than Alternative 2. Additional health and safety measures will be taken to protect the workers and the community.

- Implementability - Stabilization is a proven technology, but treatability tests are required.

Alternative 4B - Removal, Waste Treatment (Vitrification), and On-Property Disposal

With the exception of implementability and additional requirements of short-term effectiveness, the assessment for this alternative is the same as Alternative 4A.

- Short-term effectiveness - In addition to the items mentioned in Alternative 4A, it is necessary to provide treatment for the off-gases that may be released during the vitrification process.
- Implementability - Vitrification has only been performed on a smaller scale.

Alternative 5A - Removal, Waste Treatment (Cement Stabilization), and Off-Site Disposal

With the exception of long-term effectiveness and permanence and short-term effectiveness, the assessment of this alternative is the same as 4A.

- Long-term effectiveness and permanence - Shipping the waste off site eliminates the residual risk associated with this material.
- Short-term effectiveness - In addition to the assessment criteria discussed in Alternative 4A, there is an increased potential of transportation accidents due to the large number of rail shipments of the material.

Alternative 5B - Removal, Waste Treatment (Vitrification) and Off-Site Disposal

The assessment for this alternative is a combination of Alternatives 2, 4A, 4B, and 5A.

The following table is a summary of the capital cost, present worth of operating costs over a 30-year period, and total (capital and operating) present worth costs for the alternatives. The table also shows the time required to implement all items within an alternative for remediation.

TABLE ES-1
COSTS SUMMARY
(In Thousands of Dollars)

Alternative No.	Capital Cost ($)	Present Worth Operating Cost ($)	Total Present Worth ($)	Number of Months Required to Implement Alternatives
0	0	9,000	9,000	0
2	1,390,000	66,000	1,456,000	42
4A	1,220,000	20,000	1,240,000	72
4B	1,780,000	20,000	1,800,000	72
5A	1,800,000	0	1,800,000	72
5B	2,250,000	0	2,250,000	72

Figure ES-1 gives a graphical representation of the above costs.

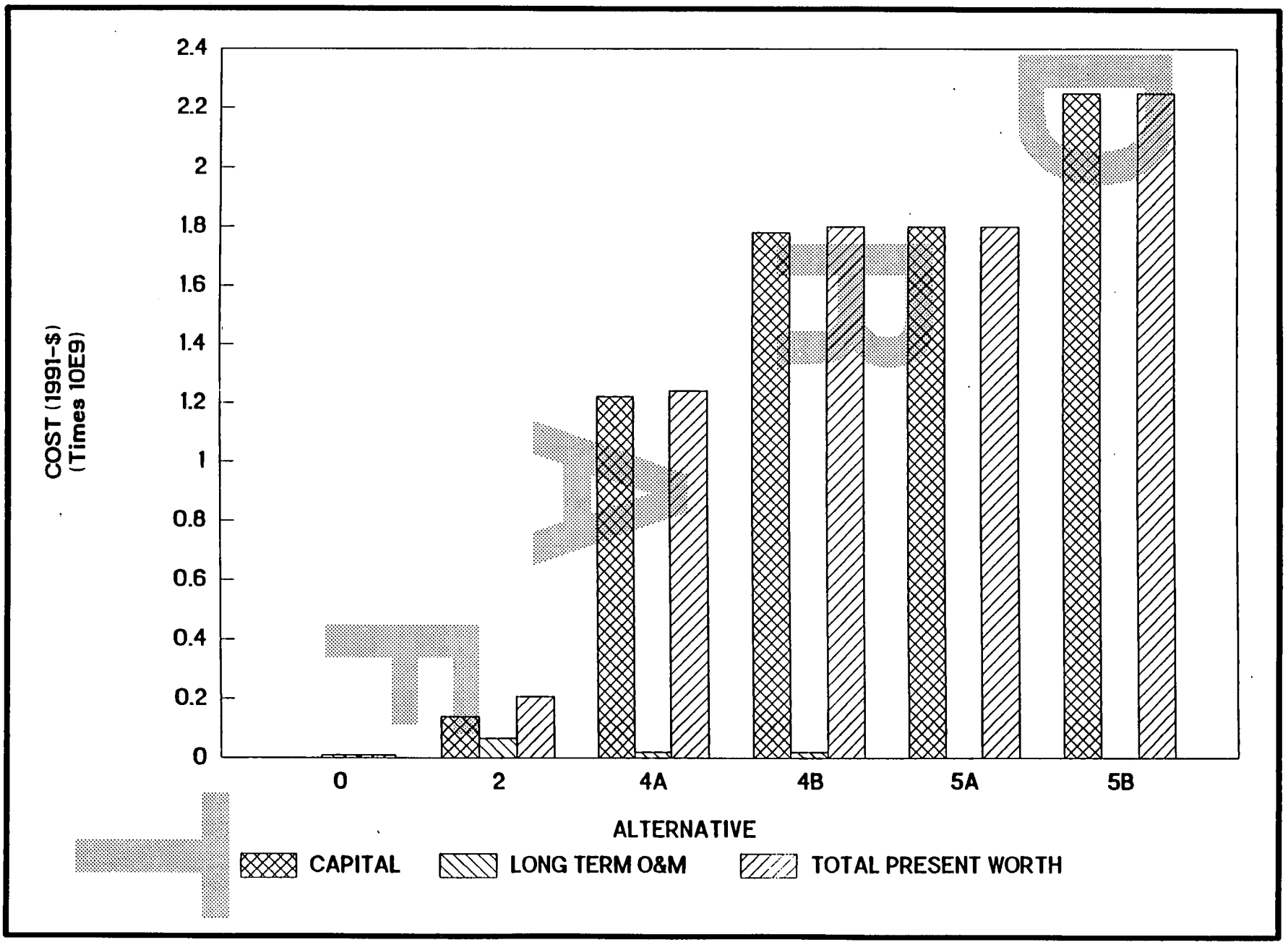

FL/FMPC-0115-2/ES-1

FIGURE ES-1. COSTS FOR ALTERNATIVES

1.0

1.0 INTRODUCTION

The Feed Materials Production Center (FMPC) is a contractor-operated federal facility that produced pure uranium metals for the U.S. Department of Energy (DOE). It is engaged in a site-wide cleanup and remediation program. The FMPC is a 1050-acre site located in a rural area approximately 20 miles northwest of Cincinnati, Ohio. The production area is limited to an approximate 136-acre tract near the center of the FMPC site. The villages of Fernald, New Baltimore, Ross, New Haven, and Shandon are all located within a few miles of the plant (Figure 1-1).

On March 9, 1985, the U.S. Environmental Protection Agency (EPA) issued a Notice of Noncompliance to DOE identifying EPA's major concerns about potential environmental impacts associated with the FMPC past and present operations. Between April 1985 and July 1986, conferences were held between DOE and EPA representatives to discuss the issues and to identify the steps DOE proposed to take to achieve and maintain environmental compliance.

On July 18, 1986, DOE and EPA jointly signed a Federal Facilities Compliance Agreement (FFCA) pertaining to environmental impacts associated with the FMPC. The FFCA was entered into pursuant to Executive Order 12088 (43CFR47707) to ensure compliance with existing environmental statutes and implementing such regulations as the Clean Air Act, the Resource Conservation and Recovery Act (RCRA), and the Comprehensive Environmental Response, Compensation, and Liability Act (CERCLA). Specifically, the FFCA was intended to ensure that environmental impacts associated with past and present activities at the FMPC are thoroughly and adequately investigated so that appropriate remedial response actions can be formulated, assessed, and implemented. On April 9, 1990, DOE and EPA Region V amended the 1986 FFCA by a Federal Facility Consent Agreement (Consent Agreement) to achieve consistency with the operable unit concept and the current commitments of the Remedial Investigation/Feasibility Study (RI/FS) program without modifying the underlying objectives. The Consent Agreement, pursuant to CERCLA Sections 120 and 106(a), became effective June 1990. Notice of the intent to conduct the Operable Unit 1 RI/FS was published in the May 15, 1990 Federal Register.

The purpose of the Consent Agreement was to achieve consistency with current regulatory programs and EPA guidance, changes in the environmental protection and compliance strategy at the FMPC such as removal actions and the operable unit concept, and the current commitments of the RI/FS program.

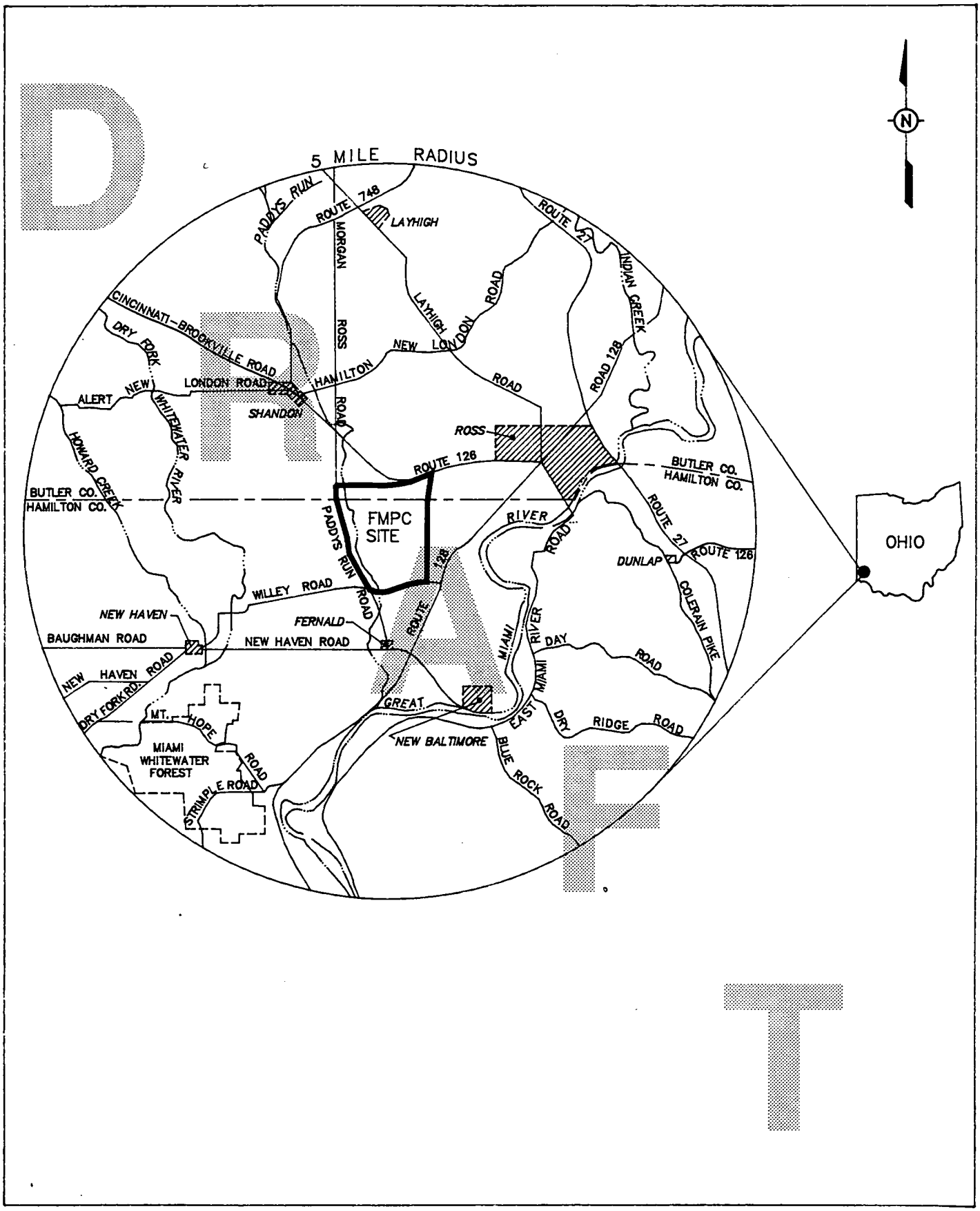

602.A_3317A146_BP_FND

FIGURE 1–1. FIVE–MILE RADIUS MAP, FEED MATERIALS PRODUCTION CENTER

1.1 PURPOSE AND ORGANIZATION OF REPORT

In response to the FFCA, an RI/FS was initiated pursuant to CERCLA, as amended by the Superfund Amendments and Reauthorization Act (SARA). The FMPC Work Plan for the site-wide RI/FS, based on the requirements of the FFCA, was originally submitted to EPA in December 1986. After a series of technical discussions, the Work Plan was modified and resubmitted in March 1988. It received EPA approval in May 1988. The revised FS Work Plan was submitted to EPA in August 1990.

This Work Plan, prepared for the site-wide RI/FS, provided the overall technical approach and also identified 27 units of the FMPC to be investigated in the RI/FS. Modifications to the list eventually increased this total to 39 units. In the course of the investigation, it became apparent that these 39 units needed to be categorized and assembled for technical and program management purposes. For effective performance of the RI/FS and planning of remediation activities, the concept of operable units was introduced into the program to accommodate separate schedules for each group of units. This allowed the remedial action process to proceed toward completion for the most well-defined or problematic units while data collection and analysis continued for other units.

There are five operable units:

- Operable Unit 1 - Waste Pits 1 through 6, the Clearwell, and the Burn Pit
- Operable Unit 2 - Solid Waste Units
- Operable Unit 3 - Production Area and Suspect Areas
- Operable Unit 4 - Silos 1, 2, 3, and 4
- Operable Unit 5 - All Environmental Media

Areas covered by Operable Units 1 through 4 (Figure 1-2) are presently considered sources for possible contamination of the underlying Great Miami Aquifer. Operable Unit 1 consists of Waste Pits 1 through 6, the Burn Pit, and the Clearwell.

This report has been prepared in conformance with EPA's Guidance for Conducting Remedial Investigations and Feasibility Studies Under CERCLA (EPA 1988a) and the FMPC Work Plan for conducting an FS. The FS Work Plan describes in detail the various tasks to be performed during the FS. These tasks include the following:

- Identification and Screening of Technologies
- Development and Screening of Alternatives
- Detailed Analysis of Alternatives
- Evaluation and Selection of Preferred Alternatives
- Preparation of FS Report

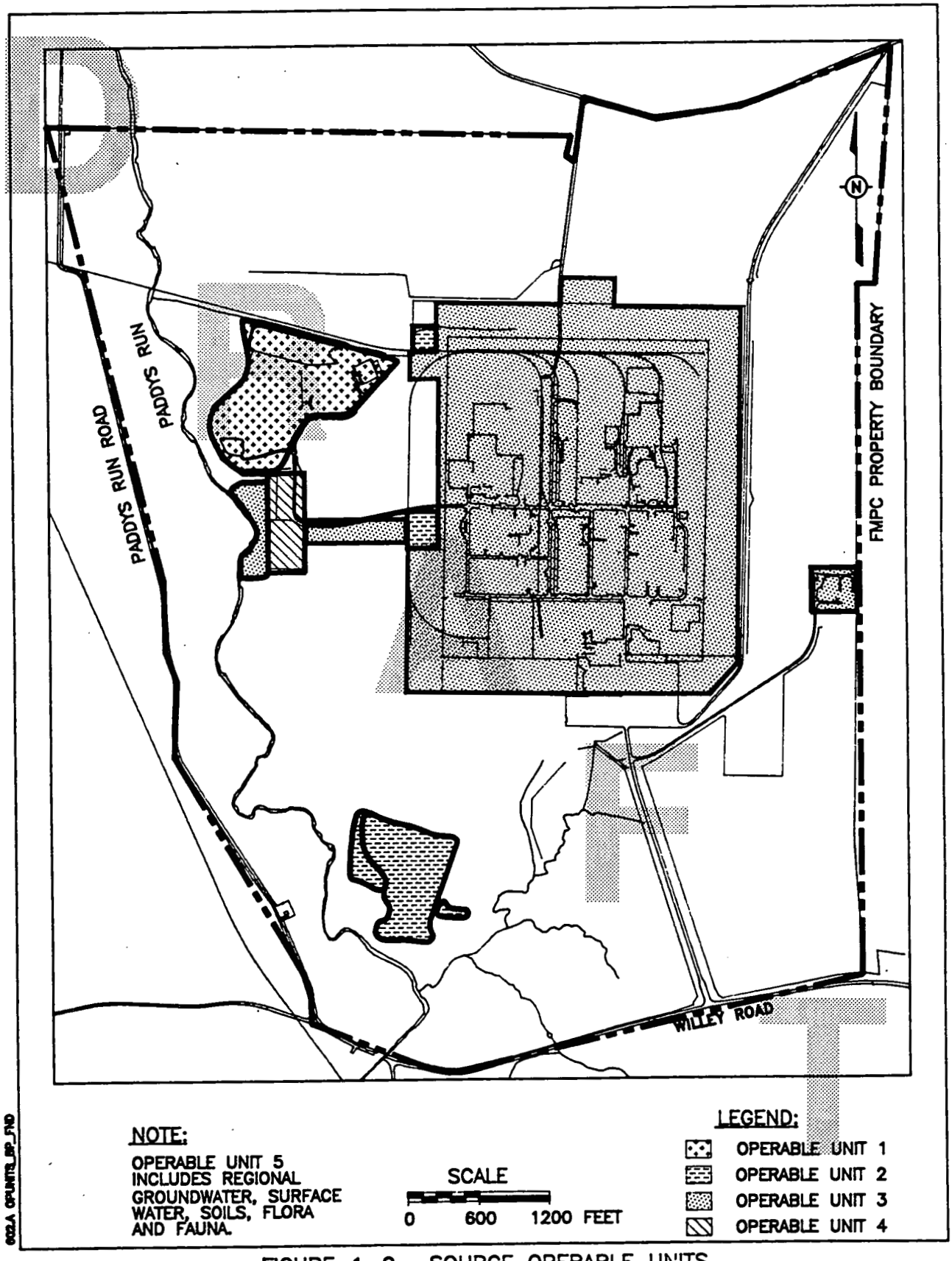

FIGURE 1–2. SOURCE OPERABLE UNITS

The FS report gives a conceptual overview of remedial action alternatives but is not intended to present design level detail. The objective is to develop a representative framework for evaluating the potential remedial action alternatives applicable to Operable Unit 1 at the FMPC site. The methodology used in the FS and how it conforms to EPA guidelines is illustrated in Figure 1-3. It is a step-by-step evaluation of process options, technologies, and assembled alternatives determined by progressing through a series of screenings. Public health factors and the technical capability of potential technologies were compared with contaminant characteristics and site conditions in the development of alternatives. This prevented infeasible or unacceptable actions from being carried forward. General alternatives were then assembled for comparative analysis using criteria for technical capability, public health and environmental impact, and cost. Retained alternatives were then subjected to a detailed analysis to develop the expected benefits, risks, and costs associated with each. This methodology provided a systematic procedure for evaluating alternatives on a common basis, clarifying the magnitude and importance of the effects resulting from the implementation of the alternative, and assessing its representative costs.

This report summarizes the screening methodology for Operable Unit 1 including the development, evaluation, and initial and final screening of remedial action alternatives. The intent is to develop criteria for a recommendation by EPA for an appropriate remediation alternative.

Section 1.0 of this report presents a summary of the RI findings. Section 2.0 includes the identification of remedial action objectives (RAOs) and general response actions as well as the identification and screening of technologies. Section 3.0 develops technologies into process options and alternatives and presents the results of the initial screening of alternatives. Section 4.0 covers the detailed analysis of the alternative for remediation. It is noteworthy that both the development of alternatives and the initial screening of alternatives were previously documented in separate reports required under the 1986 FFCA and the 1990 Consent Agreement.

Appendix A is a description of technologies that were evaluated for further consideration. Appendix B is a summary of the baseline risk assessment. A tabulation of characteristics, including volume and areas of the waste pits, the Clearwell, and the Burn Pit is contained in Appendix C. Appendix D identifies a comprehensive list of potential applicable or relevant and appropriate requirements (ARARs). Appendix E provides data on packaging and transportation, and Appendix F provides detailed cost estimates.

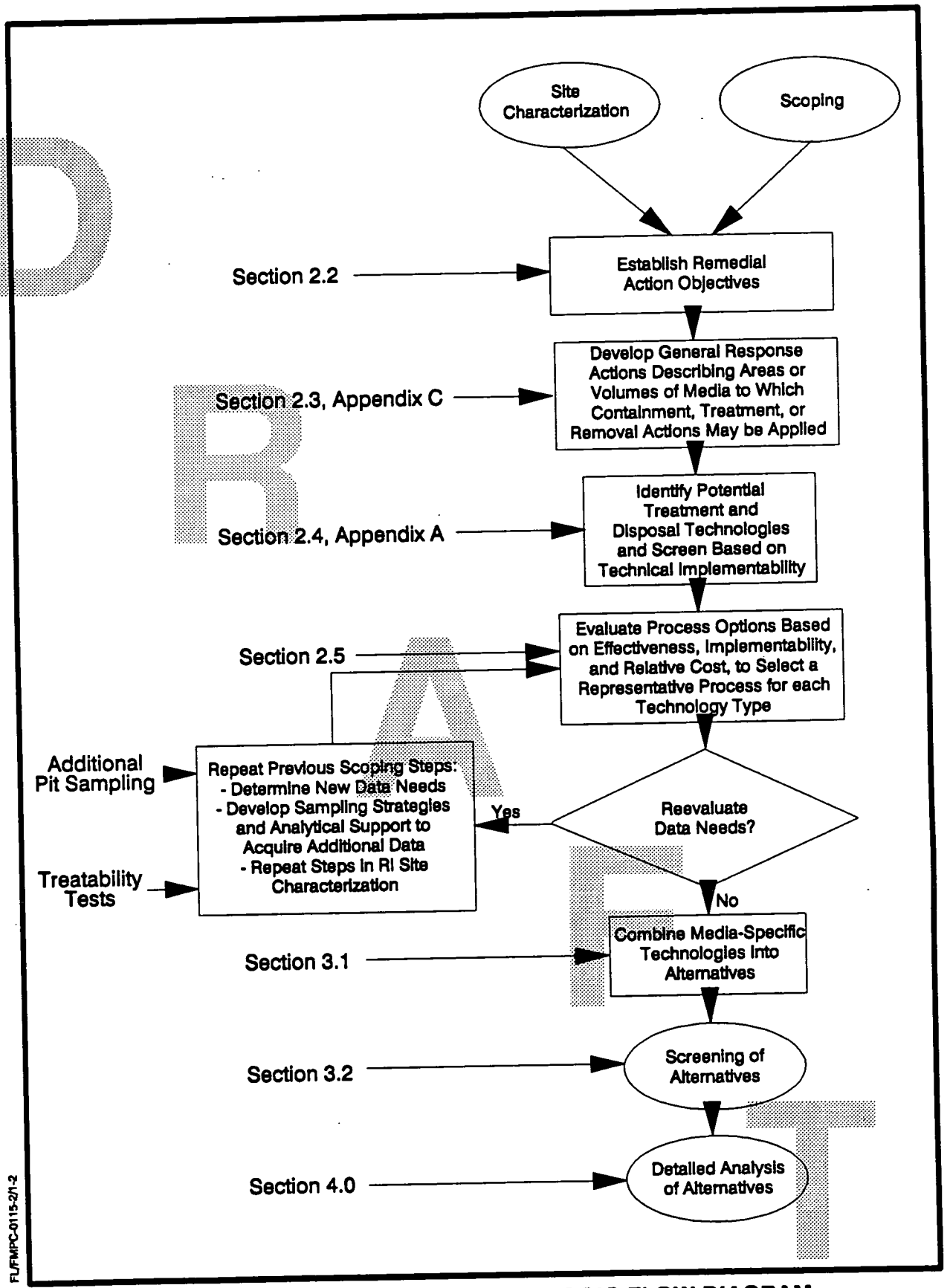

FL/FMPC-0115-2/1-2

FIGURE 1-3. FEASIBILITY STUDY LOGIC FLOW DIAGRAM

1.2 BACKGROUND INFORMATION

This section provides general site-wide information on the FMPC and the surrounding area. It includes a description of the FMPC, a site history, and a discussion of previous site investigations. More specific information for Operable Unit 1 is supplied in Section 1.2.2 and the RI Report (DOE 1990a).

1.2.1 Site Description

The FMPC is located near Fernald, Ohio approximately 20 miles northwest of Cincinnati (Figure 1-1). The site covers approximately 1050 acres of land and was used for the production of uranium metal cores, target element cores, and the interim storage of low-level radioactive/hazardous wastes. In addition to uranium production facilities, the site also contains waste storage facilities including waste pits, storage silos, a burn pit, a clearwell, fly ash disposal areas, a sanitary landfill, and lime sludge ponds (Figure 1-4). The waste pits and the Clearwell (Figure 1-5), located west of the production plant, cover approximately 37.7 acres. The area is relatively flat with gentle slopes resulting from the emplacement of final soil covers over buried wastes. Paddys Run, an intermittent tributary of the Great Miami River, runs along the west side of the FMPC property between the waste storage area and the site boundary.

The Atomic Energy Commission (AEC), predecessor to DOE, established the FMPC for processing uranium and its compounds from natural uranium ore concentrates and for recycling recoverable residues for government needs. This integrated production complex began operations in conformance with AEC Orders in the early 1950s. In 1951, the National Lead Company of Ohio (NLO) entered into a contract with the AEC as Operations and Maintenance (O&M) Contractor. This contractual relationship lasted with AEC/DOE until January 1, 1986. Westinghouse Materials Company of Ohio (WMCO), a wholly owned subsidiary of Westinghouse Electric Corporation, then assumed management responsibilities of the site operations and facilities for a minimum of five years.

A pilot plant was completed in 1951 and was the first operations facility at the FMPC. A metals fabrication plant (Plant 6) began operations in 1952. Two metals production plants (Plants 5 and 6), the green salt plant (Plant 4), recovery plant (Plant 8), sampling plant (Plant 1), and the refinery (Plants 2 and 3) began operations in 1953. The uranium hexafluoride plant (Plant 7) and the special products plant (Plant 9) became operational in 1954.

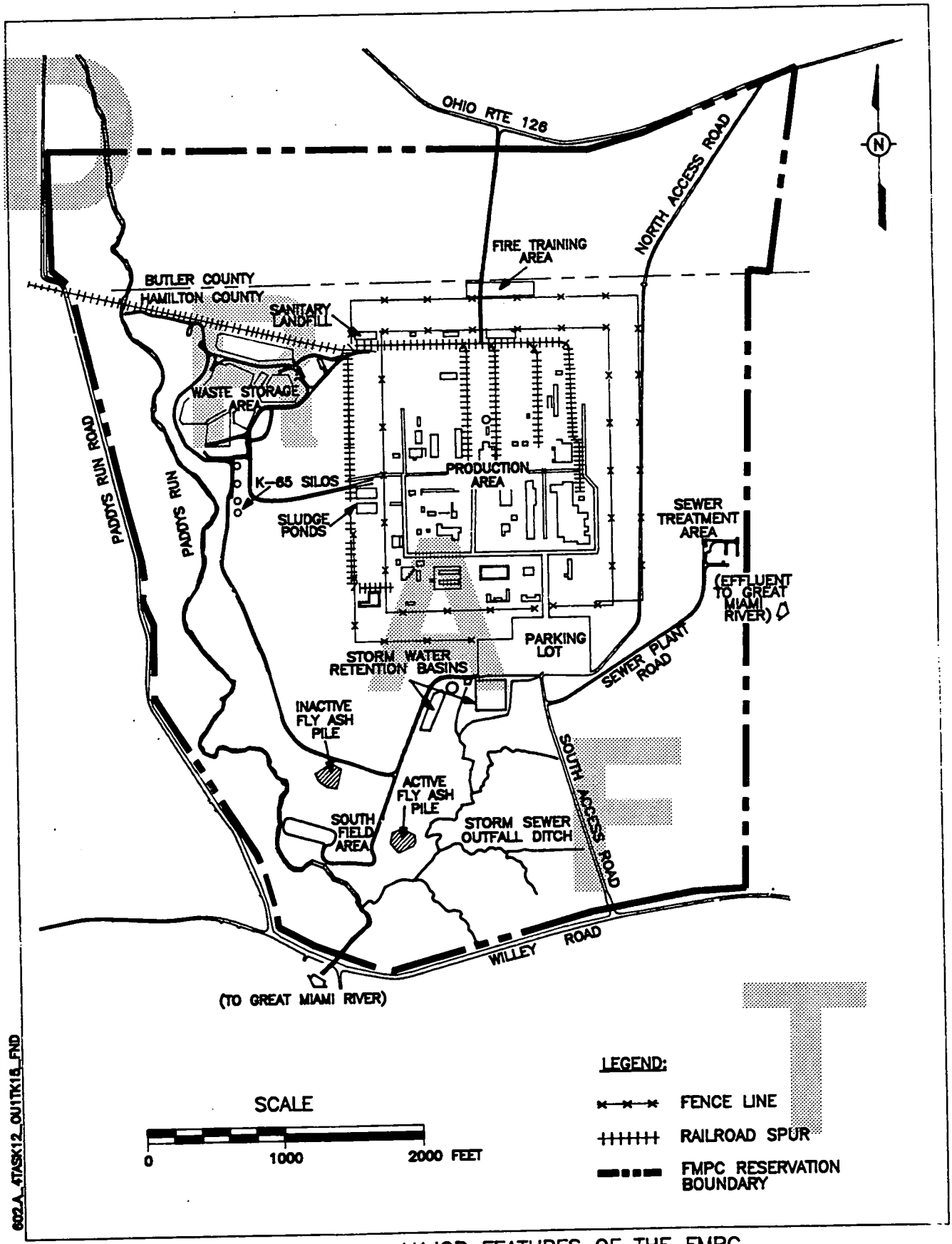

FIGURE 1-4. MAJOR FEATURES OF THE FMPC

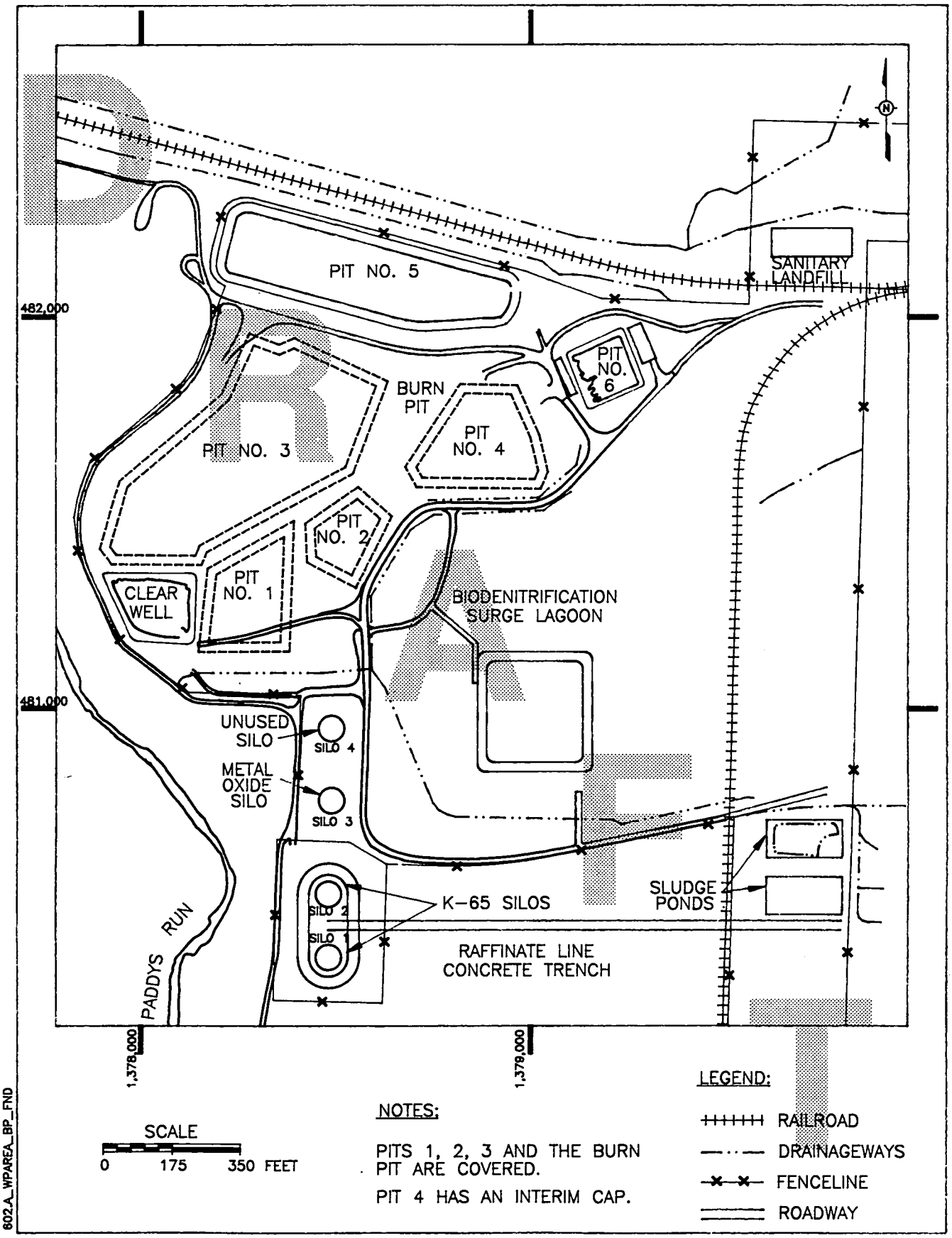

FIGURE 1-5. WASTE STORAGE AREA

Per the Consent Agreement, the technical strategy adopted for the RI/FS is to issue distinct RI/FS reports for each of five identified operable units at the FMPC. The subject of this report is Operable Unit 1, which includes Waste Pits 1 through 6, the Burn Pit, and the Clearwell. The pits and Clearwell contain approximately 450,000 cubic yards of material in solid/sludge form and 1,300,000 gallons of surface water. Besides these materials, the remediation will include an assumed five feet of the surrounding soil, any soil between pits and soils underlying the pits. This additional soil along with the contaminated portion of cap material brings the amount of material to be removed, treated, or capped to approximately 1.2 million cubic yards. Per the references given in Table C-8 of Appendix C, Waste Pits 1 through 6, the Clearwell, and the Burn Pit contain hazardous constituents (which do not necessarily cause the material to be a hazardous waste) and radiological substances; Pit 4 contains mixed waste (classified as a mixture of radiological and hazardous waste). Section 1.2.2 presents more detailed available information on the waste pits, Burn Pit, and the Clearwell.

1.2.2 Site History

Since the beginning of uranium production operations in 1952, on-property storage facilities have been used at the FMPC for the storage of low-level radioactive wastes generated by the various chemical and metallurgical processes utilized at the facility. Specifically, these wastes have been deposited in one of six waste pits, a clearwell, or burned in a burn pit. The six pits, the Clearwell, and the Burn Pit make up the 37.7 acres of the FMPC identified as Operable Unit 1.

By completing a comprehensive investigation of historical records, topographical maps, and pit construction drawings, a reasonable estimation of the quantities of materials associated with the various components of the waste pits, Clearwell, and Burn Pit have been calculated. Table 1-1 summarizes these calculations and provides essential information on each of the waste pits, the Clearwell, and the Burn Pit. The soil volumes estimated in Table 1-1 reflect the quantity of soils outside the pit liner surrounding the respective pit extending in depth to a prominent sand and gravel layer identified as the Great Miami Aquifer (approximate elevation of 548 feet mean sea level [msl]). In addition, all soil volumes are reported as a bank measure. Further historical and detailed descriptions of the six waste pits, the Clearwell, and the Burn Pit are presented in the following paragraphs.

Waste Pit 1

Waste Pit 1, constructed in 1952, was excavated to a maximum depth of 17 feet into an existing clay lens and lined with additional clay obtained from the Burn Pit. A portion of the clay liner is

Table 1-1

SUMMARY OF FMPC DERIVED PIT INFORMATION[a]

Pit No.	Average Pit Design Depth (ft)	Waste (cu. yd.)	Percent Total Waste	Water (cu. yd.)	Cap (cu. yd.)	Soils[b] (cu. yd.)	Total (cu. yd.)	Percent Total Material	Cap Thickness Range (ft)	Estimated Liner Thickness (ft)
1	14.3	33,676	7.6	—	3,063	98,341	135,080	10.9	0.5 - 1.0	4.5' clay lined
2	13.8	18,478	4.2	—	1,238	54,426	74,142	5.9	0.5 - 1.5	4' clay lined
3	27	213,248	48.1	—	71,517	33,218	317,983	25.7	7.0 - 9.0	1' clay lined
4	24	53,706	12.1	—	17,070	131,758	202,534	16.3	5.0 - 6.0	2' clay lined
5	30	98,840	22.2	3,714 (750,000 gal)	—	240,685	343,239	27.7	No Cap	60 mil EPDM elastomeric membrane
6	24	11,556	2.6	Unknown	—	79,480	91,036	7.3	No Cap	60 mil EPDM elastomeric membrane
Burn Pit	20	9,074	2.0	—	806	15,930	25,810	2.1	0.0 - 2.0	no liner
Clear Well	27	9,561	1.2	3,103 (626,681 gal)	—	37,047	49,711	4.1	No Cap	1' clay lined
TOTALS	N/A	448,139	100 %	N/A	N/A	690,885	1,239,535	100 %	N/A	N/A

a - Calculations obtained from recent as well as historical data as supplied by WMCO, Weston, and Dames & Moore.

b - Soil volumes have been calculated as those soils outside the pit liner surrounding the respective pit.
Soil volume calculations include those soils which extend in depth to the Great Miami Aquifer (Approx. elevation is 548 ft MSL).

Note: All volumes have been calculated as Bank cubic yards.

reported to be up to four feet thick on the bottom and one and one-half to two feet thick on the sides. Waste Pit 1 has an 82,693-square-foot surface area with an estimated 33,676 cubic yards of buried waste. It contains neutralized waste filter cake, fly ash, 55-gallon drums, scrap graphite, scrap brick, sump liquor, sump cake, and depleted slag (by-product of the chemical reaction between uranium tetrafluoride and magnesium). Within these materials is an estimated 115,352 pounds of uranium. The presence of a large (but unknown) quantity of drums in Waste Pit 1 was evident in photographs taken during the years of active pit operation. Although the photographs indicate that most drums are empty, neither the origin nor the nature of the materials stored in these drums is known. In 1959, Waste Pit 1 was backfilled and covered with clean soil. Surface water runoff was diverted to the Clearwell before discharge to the Great Miami River. The general consistency of the contents in Waste Pit 1 indicates wet conditions approximately eight feet below the pit surface. Additional available information on Waste Pit 1 is included in Appendix C, Table C-1.

Waste Pit 2

Waste Pit 2, constructed in 1957, was excavated to a maximum depth of 17 feet into native clay at the site of a small pond east of Waste Pit 1. Waste Pit 2 has a 44,578-square-foot surface area with an estimated 18,478 cubic yards of buried waste. It contains neutralized waste filter cake, graphite, fly ash, 55-gallon drums, scrap brick, sump liquor, sump cake, and depleted slag. An estimated 2.66 million pounds of uranium is contained within these materials in Waste Pit 2. A large quantity of concrete and other construction rubble is buried in the pit.

In 1964, the pit was taken out of service, backfilled, and covered with clean soil. Waste Pit 2 is overgrown with grass and is fairly level with a gentle slope toward a drainage ditch running alongside Waste Pit 4 on the east. Surface water runoff is diverted to the Clearwell before being discharged to the Great Miami River. The general consistency of the contents of Waste Pit 2 indicates semisolid and wet conditions approximately eight feet below the present pit surface. Additional available information on Waste Pit 2 is included in Appendix C, Table C-2.

Waste Pit 3

Waste Pit 3, with a 27-foot depth, was constructed in 1959 by excavating into the underlying till and adding a clay layer along the pit walls. Waste Pit 3 has a 241,175-square-foot surface area with an estimated 213,248 cubic yards of buried waste. The pit contains lime-neutralized raffinate (low-level uranium bottoms from tributylphosphate removal column), raffinate concentrate, slag, slag

leach residues, filter cake, fly ash, and lime sludge. Within this material are an estimated 288,041 pounds of uranium and 881 pounds of thorium.

The pit was taken out of service in the fall of 1968 as a wet pit. Subsequent usage was confined to adding dry material until 1977, at which point the pit was taken completely out of service, backfilled, and covered with clean soil. Waste Pit 3 is overgrown with grass and is fairly level. The western side of the pit slopes steeply down to the perimeter fence and road, and a gentle slope extends toward a drainage ditch running alongside the Burn Pit on the east. Surface water is diverted to the Clearwell before discharge to the Great Miami River. Wet to saturated conditions exist eight feet below the pit surface. Additional available information on Waste Pit 3 is included in Appendix C, Table C-3.

Waste Pit 4

Waste Pit 4, with a 24-foot depth, was constructed in 1960 in a manner similar to Waste Pit 3, using a clay layer approximately two feet thick along the pit walls. Waste Pit 4 has an 83,799-square-foot surface area with an estimated 53,706 cubic yards of buried waste. The pit contains process residues, filter cake, slurries, raffinates, scrap graphite, noncombustible trash, asbestos, and an estimated 23,500 pounds of barium chloride. Within the materials is an estimated 6.7 million pounds of uranium. One hundred thirty-six thousand pounds of thorium metal in 55-gallon drums was placed in Waste Pit 4. Samples collected from the borings in Waste Pit 4 exhibited levels of barium in the parts per thousand range. The presence of barium at these levels requires the waste in Waste Pit 4 to be classified as mixed waste.

In 1986, the pit was covered with clean soil and graded for surface water diversion. Waste Pit 4 was level and had no vegetative cover at the time of the Characterization Investigation Study (CIS) performed by Roy F. Weston (November 1987). An earthen berm surrounds the pit to retain surface water runoff. The general consistency of the contents indicates semisolid and wet to saturated conditions approximately nine feet below the present pit surface. In December 1988, an interim RCRA cap consisting of compacted clay overlain by a 45-mil-thick Hypalon, chloro-sulfinated polyethylene (reinforced) liner was installed on Waste Pit 4. Additional available information on Waste Pit 4 is included in Appendix C, Table C-4.

Waste Pit 5

Waste Pit 5, with a 30-foot depth, was constructed in 1968 and lined with a 60-mil-thick Royal-Seal ethylene-propylene-diene monomer (EPDM) elastomeric membrane. Occasional joint failures and tears at the surface of the liner were noticed during routine inspections and ascribed to weathering effects (Weston 1987a). The corrective action has been to glue the seam and patch the tears. Waste Pit 5 has a 161,103-square-foot area with an estimated 98,840 cubic yards of disposed waste. The pit contains solids from neutralized raffinate, slag leach slurry, sump slurry, and lime sludge. Within these materials are an estimated 111,737 pounds of uranium and 37,445 pounds of thorium. The pit was taken out of service in 1987 but remains open. The effluent tower within Pit 5 is estimated to contain 8000 pounds of steel and 64,000 pounds of concrete.

The pit is partially covered with an estimated 750,000 gallons of water ranging in depth from three feet near the west end to zero feet over one-third of the length of the pit to the east. Therefore, at the time of the CIS sampling, the waste materials were exposed over the eastern third of the pit. The surface elevation of water in Pit 5 varies depending on the precipitation and evaporation rates. Additional information on Waste Pit 5 is included in Appendix C, Table C-5.

Waste Pit 6

Waste Pit 6, with a 24-foot depth, was constructed in 1979 in a manner similar to Waste Pit 5 and is lined with an EPDM elastomeric membrane. Minor tears above the water line have been observed and repaired. Waste Pit 6 has a 32,400-square-foot surface area with an estimated 11,556 cubic yards of disposed waste. It contains green salt (uranium tetrafluoride), filter cake, slag, asbestos, and process residues containing elevated levels of uranium. Within these materials is an estimated 1.9 million pounds of uranium. The pit was taken out of service in 1985 but remains open. The pit surface is presently covered with up to two feet of standing water, the surface elevation of which varies depending on the amount of rainfall and evaporation rates. This pit contains an undetermined volume of standing water. Until March 1987, rainfall that had collected in the pit was pumped to Waste Pit 5 for settlement before being discharged via the Clearwell. Presently, collected rainfall is transferred to nearby wastewater treatment facilities before discharge. Additional information on Waste Pit 6 is included in Appendix C, Table C-6.

Burn Pit

The Burn Pit was constructed in 1953 at the site previously used to excavate the clay liner material for Waste Pits 1 and 2. The boundaries of the Burn Pit are no longer discernible from the boundaries of covered Waste Pit 4. Therefore, the area of the Burn Pit is suspected and assumed

to be that area bounded by Pits 2, 3, 4, and 5 (approximately 21,724 square feet). The depth of the Burn Pit varies because of the sloping bottom used for access during excavation and disposal operations. The maximum depth is believed to be about 20 feet. The disposed waste quantities are unknown. The pit was used to dispose of and burn laboratory chemicals, including pyrophoric and reactive chemicals, as well as waste oils and other low-level contaminated combustible materials such as wooden pallets. The Burn Pit is overgrown with grass and is fairly level. A two- to three-foot deep ditch cuts across the area on the west side and drains toward Waste Pit 2.

During the CIS, six borings were completed in the Burn Pit. These borings were made using the drill rig and split-spoon sampling method. Based on the presumed maximum depth of the pit, the borings extended no deeper than 16 feet and ended at the first indication that natural, underlying material had been penetrated. In all the borings an apparent cover layer was observed. It varied in thickness to a maximum of two feet, and it consisted of yellowish brown clay with some fine- to coarse-grained sand, trace gravel, and abundant rootlets.

Overall data from the borings indicate that the waste ranges in thickness from 9 to 16 feet. The consistency of the contents varies. Preliminary sampling indicates that glass, organic materials (e.g., wood, grass, and roots), metals, silt-sized particles, semisolids, and carbonized residues are in the Burn Pit. Additional information on the Burn Pit is included in Appendix C, Table C-7.

Clearwell

Constructed at the time of the Waste Pit 1 excavation, the Clearwell currently receives surface water runoff from the surfaces of Pits 1, 2, and 3, as well as excess impounded storm water from Pit 5. Before March 1987, the Clearwell was used as a final settling basin for process water that passed through Waste Pits 3 and 5 before discharge to the Great Miami River, a National Pollutant Discharge Elimination System (NPDES) discharge point. Water of varying depth remains in the Clearwell at all times. The depth of sediment remaining in the Clearwell is presently estimated at 11 feet. Additional information on the Clearwell is included in Appendix C, Table C-8.

1.2.3 Nature and Extent of Contamination

The RI data and data from previous studies conclusively show that releases to the environment from Operable Unit 1 have occurred. The surface soils, the glacial overburden, and the groundwater beneath the waste pits are contaminated. The principal environmental concern associated with Operable Unit 1 is contaminant migration and transport in surface water and groundwater. Results from the RI are briefly presented in the following paragraphs.

Waste Pit Contents

Waste inventory records for the waste pits indicate that: Pit 1 contains 115,352 pounds of uranium; Pit 2 contains 2,662,004 pounds of uranium and 890 pounds of thorium; Pit 3 contains 288,041 pounds of uranium and 881 pounds of thorium; Pit 4 contains 6,726,026 pounds of uranium and 136,123 pounds of thorium; Pit 5 contains 111,737 pounds of uranium and 37,445 pounds of thorium; Pit 6 contains 1,860,973 pounds of uranium; and the Burn Pit and Clearwell contain unknown amounts of uranium.

The contents of the waste pits have been sampled under the CIS program. Data from the CIS sampling program indicate that the concentration of uranium-238 (U-238) was relatively high in Pits 2, 4, and 6 with concentrations ranging from 53 to 17,900 picocuries/gram (pCi/g), 509 to 15,800 pCi/g, and 12,500 to 18,700 pCi/g, respectively. Samples from the Burn Pit contained the lowest uranium concentrations that ranged from 22 to 454 pCi/g. Pits 3 and 5 contained higher concentrations of thorium-230 (Th-230) than the other pits with concentrations ranging from 15 to 21,900 pCi/g and 3080 to 20,200 pCi/g, respectively. The Clearwell and Pit 5 contained higher concentrations of radium-226 (Ra-226) than the other pits with concentrations ranging between 22 to 458 pCi/g and 235 to 999 pCi/g, respectively.

The sampling of the waste pits conducted under the CIS program did not, however, confirm the amounts of waste reported in the waste inventory records. This was due to the inability to sample the full depth of the waste in the pits. A review of the CIS data revealed additional information requirements that must be met to complete the baseline risk assessment (RA) and the FS. Consequently, a sampling plan for the waste pits was prepared by Advanced Sciences, Inc./IT Corporation (ASI/IT). This plan has been approved and the sampling program is ongoing as this report is being prepared. No data are available from the current sampling efforts. As data become available, they will be incorporated in future revisions to this report as well as in the implementation plan of the site-wide remedial action program.

Surface Soils

A review of the surface soil data obtained during the CIS program shows that uranium and thorium are the predominant and most widespread radionuclides in the waste pit area. Uranium-238 concentrations in surface soils are elevated around the perimeter of Pit 6 and east of Pits 1 and 2. Several locations within the waste pit area had concentrations above 35 pCi/g and at some locations as high as 10,900 pCi/g. The majority of sampling locations show Th-232 concentrations to range

between 1 and 5 pCi/g. Locations that are associated with elevated U-238 activity show Th-232 concentrations ranging from 5 to 15 pCi/g. The extent of Ra-226 concentrations above background levels of 1.5 pCi/g is quite low.

The surface soil samples collected within Operable Unit 1 during the RI/FS were mostly from the north and northwest perimeter of the waste pit area, which was not covered under the CIS program. Radium-226, Ra-228, Th-228, Th-230, Th-232, U-234, and U-238 were consistently detected in these samples. The observed concentrations for radium were at or slightly above background levels. Uranium and thorium concentrations were above background with concentrations ranging from 1.0 to 62.0 and 0.6 to 13.6 pCi/g, respectively.

Subsurface Soils

A total of 26 subsurface soil samples were collected from various depths from the wells installed within the Operable Unit 1 study area during the RI/FS. These samples were analyzed for a full range of radionuclides. Radium-226, Ra-228, Th-228, Th-230, Th-232, U-234, and U-238 were consistently detected in these samples. The concentration ranges for these radionuclides in pCi/g are: 0.4 to 1210 for Ra-226; 0.5 to 160 for Ra-228; 0.6 to 22.9 for Th-228; 0.6 to 710 for Th-230; 0.6 to 33.1 for Th-232; 0.6 to 112 for U-234; and 0.6 to 320 for U-238.

Samples collected from the 1000-series wells contain higher concentrations of radionuclides than those from the 2000-series and 3000-series wells. Uranium is present in higher concentrations than the other radionuclides in the upper 15 feet of the glacial overburden. Radium and uranium concentrations in samples from the 2000-series and 3000-series wells are generally within background levels. Thorium concentrations are within or slightly above background levels.

Surface Water

Surface water samples were collected at 12 locations along drainageways within Operable Unit 1. Data from this RI sampling program, as well as data from previous studies, indicate the presence of radionuclides in the storm water runoff from the waste pits. Most of the radionuclides are present at background concentrations. Total uranium concentrations range from 54 to 9318 μg/L. Concentrations of U-234 and U-238 in two samples exceed the DOE-Derived Concentrations Guide (DCG) limit of 500 pCi/L and 600 pCi/L, respectively. These samples contained 597 and 653 pCi/L of U-234 and 2840 and 2506 pCi/L of U-238. Radium and thorium concentrations in all the samples were well within the DOE guidelines.

Sediments

No sediment samples were collected within Operable Unit 1 during the RI. However, several drainage ditches within Operable Unit 1 were sampled during the CIS program. Review of the CIS data indicates widespread uranium contamination in most of the drainage ditches. A sample from a drainage that flows parallel and adjacent to the south berm of Pit 5 contained U-238 activity concentrations ranging from 46 to 728 pCi/g. The radium and thorium concentrations were low in all the samples from the drainageway. A shallow drainage flowing north and south over the Burn Pit area contained U-238 activity concentrations ranging from 170 to 408 pCi/g. A minor drainage flowing east of Pit 4 contained U-238 activity concentrations ranging from 96 to 746 pCi/g.

Groundwater

The perched groundwater in the glacial overburden is heavily contaminated with uranium as a result of the waste pits having leaked. The highest concentration of uranium was detected in Well 1021 on the south edge of Pit 4. A sample from this well contained 15,330 µg/L of total uranium. Other wells containing high concentrations of uranium above 1000 µg/L are Wells 1022, 1073, and 1082. All the wells that contain high concentrations of uranium are located in the east central part of the waste storage pits, with the exception of Well 1073. Leakage from the waste pits is suspected of being the source of contamination in the eastern groundwater plume.

The 2000-series wells are screened at the water table of the Great Miami Aquifer and sample groundwater from the uppermost part of the aquifer. Contaminants from the heavily contaminated glacial overburden infiltrate from the perched groundwater zones to the Great Miami Aquifer. Compared to background levels of total uranium of less than 1 to 2 µg/L, elevated concentrations appear in Wells 2004, 2022, 2027, and 2084 within Operable Unit 1. The highest concentration of 21.0 µg/L was present in Well 2084. At the deepest levels of the aquifer monitored by the 3000- and 4000-series wells within Operable Unit 1, uranium concentrations are very low at concentrations ranging from 0.1 to 2.0 µg/L.

Biological Resources

The investigation of biological resources conducted during the RI determined that there is uptake of radionuclides by both plants and animals within the FMPC. Total uranium concentrations in samples of vegetation roots collected within the Operable Unit 1 study area ranged from 1.8 to 31.3 pCi/g. Other radionuclides were present in concentrations either below detection limits or at background levels. A composite macroinvertebrate sample of small mammals was collected near

Waste Pit 5 (ASI/IT 1990c). Radionuclide concentrations in the composited carcasses were below detection limits, but uranium was detected in the composited organs at 18.6 pCi/g.

1.2.4 Contaminant Fate and Transport

The principal contaminants associated with Operable Unit 1 are long half-life radionuclides, their short-lived progeny and stable decay products, and numerous inorganic and organic chemicals. Currently, uranium is the primary site-related chemical of concern. Unlike many organic compounds, the radionuclide constituents of concern present in Operable Unit 1 do not degrade into less toxic compounds. However, they do undergo transformation by radioactive decay that will ultimately reduce their active concentration. The rate of decay is expressed as the "half-life" of the radionuclide. For all practical purposes, the radioactivity associated with radionuclides present in Operable Unit 1 can be considered constant due to the long half-lives of the isotopes present. Under baseline conditions they will persist at current levels for hundreds of years.

When released from the waste storage pits, the radionuclides and nonradioactive chemicals from the Operable Unit 1 study area would contaminate the environment of the FMPC. The radiological and chemical hazard would be attributable to contaminant transport through environmental media such as air, soils, surface water, or groundwater. The mechanisms for this transport from the waste storage pits to potential receptors are detailed and applied in the Operable Unit 1 Baseline Risk Assessment report.

The following exposure pathways are discussed in the baseline risk assessment report, contaminant transport from Operable Unit 1:

- Ingestion of groundwater containing radionuclides and nonradioactive chemicals that may erode from the pits in surface water, which may leach into the underlying regional aquifer
- Ingestion of radionuclides in soils that may erode into Paddys Run from the waste storage pit area
- Inhalation of radionuclides in airborne emissions from Waste Pits 5 and 6
- Ingestion of groundwater (and food raised with groundwater) containing radionuclides and nonradioactive chemicals that may leach from waste storage pits

The first three listed are existing pathways that will not change under baseline conditions for Operable Unit 1. The fourth pathway is not a contributor to current exposure but could be a major source of transport and exposure in the future.

Each of these potential contaminant transport pathways is discussed in detail in the Operable Unit 1 Baseline Risk Assessment Report (Appendix D of the Operable Unit 1 RI report) which is summarized in the next section. The reader should refer to the baseline risk assessment for additional information about each of these pathways, the associated transport mechanisms, and the impact on the environment media or receptors.

1.2.5 Baseline Risk Assessment

Uranium is the principle contaminant of concern in current potential exposures associated with Operable Unit 1. The baseline risk assessment has determined that the risks of fatal cancer from current potential exposure to uranium from Operable Unit 1 are:

- 9×10^{-7} from ingestion of sediment by children
- 3×10^{-4} from ingestion of groundwater contaminated by surface water runoff
- 3×10^{-5} from inhalation of airborne emissions

The estimated combined risk of cancer under current potential exposure conditions is 3×10^{-4}. This risk is not within the acceptable lifetime cancer risk range of 1×10^{-4} to 1×10^{-6} as specified in 40CFR300 Subpart E.

Future exposures under current land-use conditions include ingestion of groundwater and food irrigated with groundwater contaminated by waste pit leachate. The reasonable maximally exposed (RME), which is at the southeastern FMPC property boundary, would have a 2.5×10^{-2} risk of radiocarcinogenicity and a 1.4×10^{-7} risk of chemical carcinogenicity.

Future exposures under future land-use conditions from the groundwater pathway involve an RME that is located adjacent to Opeable Unit 1. The risk to this RME is 1.0 for radiocarcinogenicity and 9.8×10^{-7} for chemical carcinogenicity.

DRAFT

2.0

2.0 IDENTIFICATION AND SCREENING OF TECHNOLOGIES

2.1 INTRODUCTION

This section discusses the development and screening of the technologies and process options used to assemble the alternatives for remediation of Operable Unit 1. The steps involved in this screening include:

- Develop media-specific RAOs
- Develop media-specific general response actions
- Identify and screen remedial technologies within each general response action
- Identify and screen process options within each technology

In the case of Operable Unit 1, the general response actions are similar for each medium of concern; therefore, a single set of general response actions was used to determine technologies and process options. The following paragraphs discuss the process of identification and screening of technologies.

2.2 REMEDIAL ACTION OBJECTIVES

RAOs are contaminant-specific, medium-specific goals for protecting human health and the environment (EPA 1988a,b), thus they are an integral part of evaluating the ability of a remedial alternative to achieve an acceptable risk level. The Guidance for Conducting Remedial Investigations and Feasibility Studies Under CERCLA states that "objectives should be as specific as possible but not so specific that the range of alternatives that can be developed is unduly limited."

RAOs are normally determined on the basis of the results of the baseline risk assessment. The objectives must address the contaminants of concern and the exposure routes and receptors identified in the Operable Unit 1 Baseline Risk Assessment. However, in a situation where a site is divided into operable units, the operable unit-specific RAOs must still be based on knowledge of the site-wide risks.

The goal of the FMPC RI/FS is to manage risks from a site-wide perspective. Because many preliminary RAOs are being developed before the completion of site characterization and a site-wide risk assessment, it is difficult to quantify how an individual operable unit contributes to total site risk; therefore it is difficult to apportion risk levels among operable units. For example, it is not known how many operable units contribute chemical "x" via exposure pathway "y" to receptor "z."

The interim policy for developing RAOs is to limit the risk from a single operable unit to an action level of 25 percent of the total allowable risk. This interim procedure ensures that a single operable unit will not "use up" all of the allowable risk for the site. Twenty-five percent was chosen as the allowable risk from a single operable unit because the FMPC is being managed as four source operable units and a single environmental medium operable unit. Effort is underway to develop a more structured approach for determining operable unit-specific RAOs. For example, apportionment could be based on the percentage that an operable unit contributes to the total mass of a contaminant estimated to be at the site. Thus, if Operable Unit 1 contains 75 percent of the total mass of contaminant "x" found at the site, Operable Unit 1 will be apportioned a proportional amount of the total risk of contaminant "x."

When characterization of individual operable units and the site-wide risk assessment are complete, the 25 percent distribution will be reevaluated and appropriate adjustments will be made in the operable unit-specific RAOs. It should be noted that at a site such as the FMPC where ongoing characterization activities will take place for several years, CERCLA-driven RAOs may not necessarily be synonymous with "final cleanup levels." Henceforth, the term RAO is used in this report to indicate the interim action level of 25 percent of the allowable site-wide risk.

As stated in the preamble to the National Oil and Hazardous Substances Pollution Contingency Plan (NCP) (EPA 1990a), chemical-specific ARARs will be used to the degree possible to determine remediation goals for the operable unit. Where ARARs do not exist for a constituent, risk-based cleanup goals will be developed.

2.2.1 Point of Compliance

For each operable unit at the FMPC, the point of compliance must be identified. The point of compliance is the geographical location at which the RAO must be achieved. At most hazardous waste sites, the point of compliance is the nearest identified receptor location for each exposure pathway.

The baseline risk assessment for Operable Unit 1 identifies two major human exposure categories: current land-use exposures and future potential land-use exposures. The current exposure setting at the site is based on the assumption of current security control measures (e.g., fencing, restricted access, security measures, etc.). These controls are assumed to remain in place for 100 years, as required by DOE Order for Radioactive Waste Management (5280.2A). After 100 years, it is

assumed that no security control measures can be relied on for protection of human health. Under these assumed conditions, the point of compliance under current exposure conditions would be the FMPC property boundary. However, to be health protective in developing RAOs once security control measures are lost after 100 years, the point of compliance becomes the boundary of the waste unit.

For Operable Unit 1, it must be demonstrated that alternatives for remediation achieve airborne radiation RAOs at a point adjacent to the waste unit/operable unit boundary. The point of compliance for meeting drinking water RAOs is at a point in the Great Miami Aquifer at the boundary of the waste unit. The point of compliance for soil is a point adjacent to the waste pits where a future receptor may contact the soils. The point of compliance for surface water is the point that runoff from Operable Unit 1 enters Paddys Run, and the point of compliance for air is the location of the identified maximum exposed individual. These points are consistent with proposed RCRA regulations.

2.2.2 Contaminants of Concern

Not all chemicals identified during site sampling pose significant health risks. The baseline risk assessment evaluated contaminants and exposure pathways to ascertain their present and future impacts on human health. Those contaminants associated with significant current and future exposures were designated contaminants of concern and are listed in Table 2-1.

The relative hazards associated with hypothetical exposures from radioactive and hazardous chemical constituents from Operable Unit 1 vary with the remedial alternative selected. In general, the radiological risks tend to be greater for most alternatives and pathways, but the risks associated with the hazardous components in the waste pits cannot be neglected in all cases. The baseline risk assessment for Operable Unit 1 discusses the magnitude and relative importance of these risks in greater detail.

2.2.3 Remedial Action Objectives Based on Applicable or Relevant and Appropriate Requirements

The development of RAOs is concurrent with the identification of ARARs, which can be found in Appendix D. In the case of the FMPC, ARARs may need to be interpreted in relation to site-specific conditions to ensure sufficient health protection based on multiple sources and pathways. As stated in Section 2.2, 25 percent of the chemical-specific ARAR is the RAO for a single operable unit. The 25 percent may need to be adjusted if a single operable unit contains multiple

TABLE 2-1

CHEMICALS OF CONCERN FOR OPERABLE UNIT 1

Medium	Chemical(s) of Concern
Air	Uranium
Soil	Uranium
Sediment/surface water	Uranium
Groundwater	All waste pit constituents (see Tables 2-3 through 2-5)
Pit wastes	All waste pit constituents (see Tables 2-3 through 2-5)

DRAFT

sources or exposure pathways. For Operable Unit 1, however, the waste pits are considered a single source.

ARARs have been identified for the control of airborne emissions, airborne radon, and for some of the waste pit constituents that may reach the groundwater. These chemical-specific ARARs are listed in Table 2-2. In the case where both a maximum contaminant level (MCL) and a proposed MCL exist for a constituent, the proposed MCL is used to develop the RAO.

2.2.4 Remedial Action Objectives Based on Risk Criteria

For several waste pit constituents, no MCLs or proposed MCLs exist. In this case, the RAO is based on several sources of toxicity information. EPA provides guidance on using toxicity-based reference doses (RfDs) and cancer slope factors (CSFs) (EPA 1990) to determine acceptable intake levels in water (EPA 1988b). The method is similar to the manner used to develop MCLs (EPA 1989). Briefly, the RAO is estimated using the following steps:

- Determine the acceptable daily intake, or RfD, for noncarcinogens based on dose response data and appropriate safety factors
- Determine the acceptable risk level for carcinogens
- Determine the acceptable water concentration (c) based on the assumption that a 70-kilogram adult drinks two liters of water per day, such that:

  [(c mg/L)(2 liter/day)]/70 kg = RfD (mg/kg/day), for noncarcinogens or

  [(c mg/L)(2 liter/day)]/70 kg = (acceptable risk level)/CSF (mg/kg/day), for carcinogens
- Apply any site-specific or operable unit-specific relative source contribution factors. The acceptable risk level of carcinogens as specified by the NCP is 10^{-4} to 10^{-6}. The proposed subparts of RCRA regulations state that the total site-wide risk from all chemicals and pathways should not exceed 10^{-4}.

Nonradioactive chemicals of concern for Operable Unit 1 are inorganic or organic substances that are chemical toxicants via the oral intake route. Therefore, RAOs are based on RfDs, not on CSFs. RfDs for calculating acceptable water concentrations are found in the IRIS database (EPA 1990b) and in the Health Effects Assessments Summary Tables (EPA 1990c).

TABLE 2-2

OPERABLE UNIT 1 ARARs

Chemical-Specific	Standard	ARAR/TBC	Regulation
Airborne Radionuclide Emission (Except Airborne Radon-222)	Public Dose < 10 mrem/yr	Applicable	40CFR61, Subpart H
Radon-222 Emissions	No Source >20 pCi/m²/s	Applicable	40CFR61, Subpart Q
Radiation Dose Limits (All Pathways)	100 mrem/year	To Be Considered	DOE Order 5400.5
Chemicals or Radionuclides in Drinking Water	Arsenic <0.05 mg/L Barium <1.00 mg/L Cadmium <0.01 mg/L Chromium <0.05 mg/L Lead <0.05 mg/L Mercury <0.002 mg/L Radium <5 pCi/L Selenium <0.01 mg/L Silver <0.05 mg/L Chloroform <0.1 mg/L PCBs <0.0005 mg/L Trichloroethene <0.005 mg/L	Applicable	40CFR141.11 OAC3645-81-11
Chemicals in Drinking Water	Barium <5.0 mg/L Cadmium <0.005 mg/L Chromium <0.1 mg/L Selenium <0.05 mg/L Ethyl benzene <0.7 mg/L Pentachlorophenol <0.2 mg/L Tetrachloroethene <0.005 mg/L Toluene <2.0 mg/L Xylenes <10 mg/L	To Be Considered	40CFR Parts 141,142, 143 Proposed Rule
Chemicals in Surface Water	Arsenic <48µg/L Beryllium <5.3µg/L Cadmium <1.1µ/L Chromium <11µg/L Copper <12µg/L	To Be Considered	40CFR131.21 Quality Criteria for Water

TABLE 2-2
(Continued)

Chemical-Specific	Standard	ARAR/TBC	Regulation
Chemicals in Surface Water (Continued)	DDT <0.001µg/L Lead <3.2µg/L Mercury <0.012µg/L Nickel <160µg/L		
	Parathion <0.013µg/L PCBs <0.014µg/L Pentachlorophenol <13µg/L Selenium <36µg/L Silver <0.12µg/L Zinc <47µg/L	To Be Considered	40CFR131.21 Quality Criteria For Water

DRAFT

2.2.5 Summary of Operable Unit 1 Remedial Action Objectives

RAOs for all relevant media associated with Operable Unit 1 are summarized in Figure 2-1. As shown, many of the RAOs for Operable Unit 1 are based on chemical-specific ARARs. Risk-based RAOs using the chemical-specific RfD had to be developed for five inorganic metals for the groundwater pathway. RAOs for each medium are briefly summarized below. An RAO that must be applied across all media is that total cancer risk from carcinogenic chemicals be within the 10^{-4} to 10^{-6} goal set forth in the NCP and RCRA requirements that suggest that the total site risk meet a 10^{-4} goal. The goal for noncancer hazards is 25 percent of the allowable Hazard Index (HI). The HI is the ratio of the estimated intake of a noncarcinogen to the allowable intake or RfD. An HI greater than one indicates that an exposure may be unacceptable.

2.2.5.1 Pit Waste

The qualitative RAOs for the pit waste are to prevent direct contact with the waste and to prevent migration of the waste pit constituents to the surrounding environmental medium.

2.2.5.2 Air

Two ARARs have been considered applicable to Operable Unit 1 airborne emissions: 40CFR61 Parts 102 and 192. Part 102 allows a 10 mrem/year dose limit to the public for all airborne nuclides except Rn-222. Twenty-five percent of this limit, 2.5 mrem/year, is the limit for each operable unit. Part 192 requires that radon flux from a single source cannot exceed 20 pCi/m^2-s.

2.2.5.3 Soils

The qualitative RAOs for soils surrounding the waste pits are to prevent direct contact with soils and to prevent soil constituents from migrating to surface waters, sediments, and groundwater.

2.2.5.4 Sediment

The RAOs for sediment are based on the same criteria used to determine RAOs for soil.

2.2.5.5 Surface Water

Chemical-specific RAOs for surface water are listed in Table 2-3. These RAOs are designed to protect aquatic life in surface waters and are based on fresh water chronic exposure criteria for ambient water quality.

MEDIA		REMEDIAL ACTION OBJECTIVES	GENERAL RESPONSE ACTIONS
1. PIT WASTES	1-1	For Human Health: Prevent inhalation of/ingestion of/direct contact with pit wastes which would result in doses of non-carcinogens greater than 25 percent of RfDs or in doses of carcinogens posing cancer risk levels greater than 2.5E-05.	No Action Institutional Actions Containment Containment/Treatment Removal/Treatment/Disposal
	1-2	Prevent migration of contaminants (Tables 2-4 through 2-6) which would result in groundwater concentrations greater than 25 percent of MCLs or that would result in doses of carcinogens posing cancer risk levels greater than 2.5E-05 or in doses of non-carcinogens greater than 25 percent of RfDs.	
	1-3	For Environmental Protection: Prevent migration of contaminants that would result in surface water levels greater than ambient water quality criteria (Table 2-3).	
2. AIR	2-1	For Human Health: Prevent inhalation of contaminants (Table 2-1) which would result in doses greater than 25 percent of the RfD or doses which pose cancer risk levels greater than 2.5E-05.	No Action Institutional Actions Containment Containment/Treatment Removal/Disposal/Treatment
	2-2	Prevent inhalation of airborne radiation from exceeding a 2.5 mrem dose, and radon inhalation doses which pose greater than 2.5E-05 total cancer risk levels.	
	2-3	For Environmental Protection: Prevent current and future radiation emissions from causing detectable chronic effects.	

FIGURE 2-1. REMEDIAL ACTION OBJECTIVES AND ASSOCIATED GENERAL RESPONSE ACTIONS

FL/FMPC-0115-2/RAOT1

MEDIA		REMEDIAL ACTION OBJECTIVES	GENERAL RESPONSE ACTIONS
3. SOIL	3-1	For Human Health: Prevent inhalation of/ingestion of/direct contact with soils surrounding the waste pits which would result in doses of non-carcinogens greater than 25 percent of the RfD or doses of carcinogens posing cancer risk levels greater than 2.5E-05 (Table 2-1).	No Action Institutional Actions Containment Containment/Treatment Removal/Disposal/Treatment
	3-2	Prevent migration of contaminants (Tables 2-3 through 2-5) which would result in groundwater concentrations greater than 25 percent of MCLs or that would result in doses of carcinogens posing cancer risk levels greater than 2.5E-05 or doses of non-carcinogens greater than 25 percent of RfDs.	
	3-3	Prevent contact with radium and thorium to 5 pCi/g in the first 15 cm of soil, and 15 pCi/g at lower depths. Prevent contact with other nuclides to concentrations resulting in doses greater than 25 mrem.	
	3-4	For Environmental Protection: Prevent migration of contaminants that would result in surface water levels greater than ambient water quality criteria (Table 2-6).	
4. SEDIMENT	4-1	For Human Health: Prevent ingestion of/direct contact with sediment contaminants (Table 2-1) which would result in doses of non-carcinogens greater than 25 percent of RfDs or doses of carcinogens posing cancer risk levels greater than 2.5E-05.	No Action Institutional Actions Containment Containment/Treatment Removal/Disposal/Treatment
	4-2	For Environmental Protection: Prevent releases of contaminants from sediments that would result in surface water levels greater than 25 percent of ambient water qualtiy criteria (Table 2-6).	

FIGURE 2-1.
(CONTINUED)

FL/FMPC-0115-2/RAOT2

000054

6438

MEDIA		REMEDIAL ACTION OBJECTIVES	GENERAL RESPONSE ACTIONS
5. SURFACE WATER	5-1	For Human Health: Prevent ingestion of water having contaminants greater than 25 percent of MCLs or which would result in doses of non-carcinogens greater than 25 percent of RfDs or doses of carcinogens posing cancer risk levels greater than 2.5E-05 (Tables 2-4 through 2-6).	No Action Institutional Actions Containment Containment/Treatment Removal/Disposal/Treatment
	5-2	For Environmental Protection: Restore surface water to below 25 percent of ambient water quality criteria (Table 2-3).	
6. GROUNDWATER	6-1	For Human Health: Prevent ingestion of water having contaminant levels greater than 25 percent of MCLs or which would result in doses of non-carcinogens greater than 25 percent of the RfD or doses of carcinogens posing cancer risk levels greater than 2.5E-05 (Tables 2-4 through 2-6).	No Action Institutional Actions Containment Containment/Treatment Removal/Disposal/Treatment
	6-2	For Environmental Protection: Restore groundwater aquifer to contaminant concentrations below 25 percent of MCLs (Tables 2-4 through 2-6).	

FIGURE 2-1.
(CONTINUED)

FL/FMPC-0112-2/RAOT3

000055

6438

TABLE 2-3

REMEDIAL ACTION OBJECTIVES FOR PROTECTION OF AQUATIC LIFE IN SURFACE WATERS

Chemical	Acceptable Water Concentration (µg/L)	FMPC Action Level for a Single Operable Unit[a] (µg/L)
Arsenic	190[b]	47.5
Cadmium	1.1[b]	0.28
Beryllium	5.3[b]	1.325
Chromium	11[b]	2.57
Copper	12[b]	3
DDT	0.001[b]	2.5×10^{-4}
Lead	3.2[b]	0.8[b]
Mercury	0.012[b,c]	0.003
Nickel	160[b,c]	40
Parathion	0.013[b]	0.00325
PCBs	0.014[b]	0.0035
Pentachlorophenol	13[b]	3.25
Selenium	36	9
Silver	0.12	0.03
Zinc	110[c,d]	27.5

[a]Twenty-five percent of ARAR.

[b]Source: USEPA, Office of Water Regulations and Standards, 1986, "Quality Criteria for Water 1986, (Chronic Exposure)," EPA 440/5-86-001, Washington, D.C.

[c]Hardness dependent criteria (100 mg/L used)

[d]Source: USEPA, Office of Solid Waste and Emergency Response, 1990, "ARARs Q's & A's: Compliance with Federal Water Quality Criteria (Continuous Concentration)," EPA 9234.2-09/FS. Washington D.C.

DRAFT

2.2.5.6 Groundwater

Waste pit constituents may leach into the regional aquifer sometime in the future. RAOs for groundwater specify that MCLs specified in 40CFR141 should not be exceeded due to migration of waste pit constituents into the regional aquifer. Chemical-specific RAOs for groundwater are listed in Tables 2-4 through 2-6.

2.3 GENERAL RESPONSE ACTIONS

General response actions describe actions that will satisfy the RAOs. General response actions may include treatment, containment, excavation, extraction, disposal, institutional actions, or a combination of these. The relationship of the general response actions to the RAOs is shown in Figure 2-1.

2.3.1 No Action

The no-action alternative is retained throughout the FS process as a comparative baseline against which other alternatives will be evaluated. In the no-action alternative, Pits 1 through 6, the Clearwell, and the Burn Pit would be left "as is."

2.3.2 Institutional Actions

Institutional actions include access controls and monitoring. Although institutional actions do not reduce the volume, mobility, or toxicity of the wastes, they can be helpful in reducing direct exposure pathways and the resultant risk to the public.

2.3.3 Containment

One method of reducing the risk to the public is by reducing the mobility of the waste. To reduce such mobility, the waste must be separated from the primary transport mechanisms including wind, surface water, groundwater, and biological and mechanical means. The isolation of the waste would be accomplished by the installation of surface and subsurface barriers to either block or redirect the transport mechanism away from the waste. This containment of the waste can be done by run-on/runoff controls, capping, subsurface flow control, or any combination of these.

2.3.4 Removal/Disposal

A general response action of removal/disposal was considered and rejected for Operable Unit 1. The removal/disposal option would consist of simply removing the waste from the pits by various hydraulic, pneumatic, or mechanical means and directly disposing of the waste to either an on-site or off-site facility. The removal/disposal option was rejected due to the high moisture content of

TABLE 2-4

OPERABLE UNIT 1
GROUNDWATER REMEDIAL ACTION OBJECTIVES FOR RADIONUCLIDES

Radionuclide	Drinking Water Concentration Corresponding to 4 mrem/yr (pCi/L)	FMPC Action Level for a Single Operable Unit[a] (pCi/L)
Cs-137	110	27
Ra-224	15	4
Ra-226	5[b]	1
Ra-228	5[b]	1
Ru-106	200	50
Sr-90[b]	8[b]	2
Tc-99	3750	938
Th-228	14	3
Th-230	10	2
Th-232	2	0.5
U-234	19	5
U-235	21	5
U-238	21	5

[a] Twenty-five percent of ARAR or risk-based standard.

[b] Values listed are the Maximum Contaminant Levels (MCLs) for the radionuclides as defined in 40 CFR141. Calculation of concentrations by the same method as the other radionuclides results in the following values; Ra-226=4pCi/L, Ra-228=4pCi/L, Sr-90=11pCi/L.

DRAFT

TABLE 2-5

OPERABLE UNIT 1
GROUNDWATER REMEDIAL ACTION OBJECTIVES FOR INORGANIC CHEMICALS

Chemical	Basis for Remedial Objective[a]	Acceptable Water Concentration (mg/L)	FMPC Action Level for a Single Operable Unit[b] (mg/L)
Arsenic	0.05 mg/L MCL	0.05	0.0125
Barium	5.0 mg/L PMCL	5.0	1.25
Beryllium	4.3 $(mg/kg/d)^{-1}$ CSF	8.1×10^{-6}	2×10^{-6}
Cadmium	0.005 mg/L PMCL	0.005	0.00125
Chromium	0.1 mg/L PMCL	0.1	0.025
Cobalt[c]	-	-	-
Copper	1.3 mg/L HA[d]	1.3	0.325
Lead	0.05 mg/L[e]	0.05	0.0125
Manganese	0.2 mg/kg/d RfD	7.0	1.75
Mercury	0.002 mg/L MCL	0.002	0.0005
Nickel	0.1 mg/L PMCL	0.1	0.025
Selenium	0.003 mg/kg/d RfD	0.1	0.025
Silver	0.05 mg/L MCL	0.05	0.0125
Thallium	0.00007 mg/kg/d RfD	0.002	0.0005
Vanadium	0.007 mg/kg/d RfD	0.2	0.05
Zinc	0.2 mg/kg/d RfD	7.0	1.75

[a] MCLs and PMCLs from 40CFR141.11 or 40CFR141, 142, and 143; RfDs and CSFs from Health Effects Assessment Summary Tables, EPA 1990.

[b] Twenty-five percent of ARAR or of risk-based standard

[c] No MCL, PMCL, RfD, or CSF has been developed by EPA

[d] Drinking Water Health Advisory (HA)

[e] EPA is considering a substantially lower number

DRAFT

TABLE 2-6

OPERABLE UNIT 1
GROUNDWATER REMEDIAL ACTION OBJECTIVES FOR ORGANIC CHEMICALS

Chemical	Basis for Remedial Objective[a]	Acceptable Water Concentration (mg/L)	FMPC Action Level for a Single Operable Unit[b] (mg/L)
Acenaphthene[c]	-	-	-
Acetone	0.1 mg/kg/d RfD	3.5	8.75×10^{-1}
Anthracene	0.3 mg/kg/d RfD	10.5	2.625
Aroclor-1242	0.0005 mg/L MCL	5.0×10^{-4}	1.25×10^{-4}
Aroclor-1248	0.0005 mg/L MCL	5.0×10^{-4}	1.25×10^{-4}
Aroclor-1254	0.0005 mg/L MCL	5.0×10^{-4}	1.25×10^{-4}
Aroclor-1260	0.0005 mg/L MCL	5.0×10^{-4}	1.25×10^{-4}
Benzo(a)anthracene	0.0001 mg/L PMCL	1.0×10^{-4}	2.5×10^{-5}
Benzo(a)pyrene	0.0002 mg/L PMCL	2.0×10^{-4}	5.0×10^{-5}
Benzo(b)fluoranthene	0.0002 mg/L PMCL	2.0×10^{-4}	5.0×10^{-5}
Benzo(ghi)perylene[c]	-	-	-
Benzo(k)fluoranthene[c]	-	-	-
Bis(2-ethylhexyl) phthalate	0.014 $(mg/kg/d)^{-1}$ CPF	2.5×10^{-3}	6.3×10^{-4}
2-Butanone	0.05 mg/kg/d RfD	1.75	4.38×10^{-1}
Chloroform	0.1 mg/L MCL	1.0×10^{-1}	2.5×10^{-2}
Chrysene	0.0002 mg/L PMCL	2.0×10^{-4}	5.0×10^{-5}
Dibenzofuran[c]	-	-	-
1,1-Dichloroethane	0.091 $(mg/kg/d)^{-1}$ CSF	3.8×10^{-4}	9.5×10^{-5}
Di-n-butylphthalate[c]	-	-	-
Di-n-octylphthalate[c]	-	-	-
DDT	0.34 $(mg/kg/d)^{-1}$ CSF	1.0×10^{-4}	2.5×10^{-5}
Ethylbenzene	0.7 mg/L PMCL	7.0×10^{-1}	1.75×10^{-1}
Ethyl parathion[c]	-	-	-
Fluoranthene	0.04 mg/kg/d RfD	1.4	3.5×10^{-1}
Fluorene	0.04 mg/kg/d RfD	1.4	3.5×10^{-1}
Indeno(1,2,3-cd)pyrene	0.0004 mg/L PMCL	4.0×10^{-4}	1.0×10^{-4}
Methylene chloride	0.0075 $(mg/kg/d)^{-1}$ CSF	4.7×10^{-3}	1.2×10^{-3}
Methyl parathion	0.00025 mg/kg/d RfD	8.75×10^{-3}	2.19×10^{-3}
2-Methylnaphthalene[c]	-	-	-

TABLE 2-6
(Continued)

Chemical	Basis for Remedial Objective[a]	Acceptable Water Concentration (mg/L)	FMPC Action Level for a Single Operable Unit[b] (mg/L)
Naphthalene	0.004 mg/kg/d RfD	1.4×10^{-1}	3.5×10^{-2}
Pentachlorophenol	0.2 mg/L PMCL	2.0×10^{-1}	5.0×10^{-2}
Phenanthrene[c]	-	-	-
Phenol	0.6 mg/kg/d RfD	21.0	5.3
Pyrene	0.03 mg/kg/d RfD	1.05	2.63×10^{-1}
Tetrachoroethene	0.005 mg/L PMCL	5.0×10^{-3}	1.25×10^{-3}
Toluene	2.0 mg/L PMCL	2.0	5.0×10^{-1}
Trichloroethene	0.005 mg/L MCL	5.0×10^{-3}	1.25×10^{-3}
1,1,1-Trichloroethane	0.2 mg/L MCL	2.0×10^{-1}	5.0×10^{-2}
Xylenes (Total)	10.0 mg/L PMCL	10.0	2.5

[a]MCLs and PMCLs from 40CFR141.11 or 40CFR Parts 141, 142, and 143; RfDs and CSFs from Health Effects Assessment Summary Tables, EPA 1990.

[b]Twenty-five percent of ARAR of risk-based standard

[c]No MCL, PMCL, RfD, or CSF has been developed by EPA.

the waste in the pits. To avoid large quantities of leachate generation, the free liquids are removed and then the waste is solidified. For this reason the removal/disposal response action by itself is not included in Figure 2-1.

The removal/disposal response action is, however, a viable response when combined with treatment actions.

2.3.5 Containment/Treatment

The containment treatment general response action contains the same containment technologies and related process options as the containment general response action (run-on/runoff control, capping, and subsurface flow control). Added to the containment response action is an in situ treatment response action. The objective of the in situ treatment response action would be to reduce the toxicity, mobility, or volume of waste present in and around the pits. The in situ treatment would consist of any one of a variety of chemical and/or physical treatment methods. The combination of a treatment action combined with containment would further reduce the potential of a release from the facility.

2.3.6 Removal/Treatment/Disposal

The last general response action is similar to the removal/disposal general response action with the added remedial technology of waste stabilization. The process options associated with waste stabilization include the following:

- Asphalt-based solidification in which asphalt is mixed with the soil and waste and solidified
- Cement-based solidification in which cement and fly ash are mixed with the waste and soil
- Thermoplastic encapsulation where polymers are mixed with the waste and soil and solidified
- Vitrification in which high temperature crystallization/glassification of waste is performed in batch vitrifiers
- Activated carbon reagents option, which uses lime, fly ash, and activated carbon reagents to stabilize the waste and soil

The addition of the treatment component to the removal/disposal action would eliminate the problem of free liquids in the waste stream.

2.4 IDENTIFICATION AND SCREENING OF TECHNOLOGIES AND PROCESS OPTIONS

The objective of this subsection is to identify and screen the technologies and process options. Before the identification and screening of technologies and process options can be accomplished, it is necessary to identify the media, associated areas, and volumes to which response actions might be applied. The characteristics, volumes, and areas of Waste Pits 1 through 6, the Clearwell, and the Burn Pit are included in Appendix C and Table 1-1.

The following are the identified media:

- Storm/surface water
- Perched groundwater
- Excavation/remediation water
- Standing water (Pits 5 and 6)
- Air (fugitive dust)
- Soils and sediments
- Pit waste

The storm/surface water will be handled by the existing on-site water treatment facilities including the advanced wastewater treatment system and other modifications/applicable interim removal actions. There is a plan to integrate the water treatment requirements of this operable unit into the site-wide water treatment system. Due to the large quantities of soil, sediment, and accompanying contaminated water with high solid content, a conceptual, self-sustaining modular water treatment system is proposed. If the site-wide water treatment can accommodate the needs of this operable unit, this separate water treatment system and its associated costs will be deleted. It may also develop that the site-wide water treatment system can use some of the proposed pretreatment or other treatment modules. In this case, the overall cost of the water treatment system will be reduced.

Based on available information, media-specific potentially feasible remedial technologies and process options were identified for each of the relevant response actions. These technologies were compiled by utilizing technologies described in various EPA documents as well as other applicable references. Each of these technologies and process options underwent an initial screening for technical feasibility. The goal of the screening process was to reduce the original number of possible technologies to a smaller and more workable number of individual technologies that were considered applicable or appropriate for the various media. In this step, both process options and entire technology types could be eliminated based on technical implementability criteria.

Information regarding site characterization, contaminant types, and contaminant concentrations was used to eliminate technologies and process options that were either not applicable or could not be implemented effectively at the site. The results of the initial screening are shown in Figure 2-2.

Section 2.4.3 on Technology Issues discusses significant technical considerations that impact multiple technologies, process options, and media.

2.4.1 Screening Criteria

The identification and screening of technologies and process options consisted of the following steps:

- A review of the RAOs specifying the contaminants and media of concern, exposure pathways, and preliminary remediation goals that permit development of treatment and containment alternatives for remediation. The preliminary remediation goals were developed on the basis of chemical-specific ARARs, when available and other pertinent information (e.g., RfDs), and site-specific, risk-related factors.

- A review of the general response actions for each medium of interest defining containment, treatment, excavation, pumping, or other actions, singly or in combination, that could be used to satisfy the remedial action objectives for the site

- Based on available information, identification of volumes or areas of media to which general response actions might be applied, taking into account the requirements of the remedial action objectives and the chemical and physical characterization of the site

- The identification and screening of the technologies and process options applicable to each general response action and the elimination of those that could not be technically implemented at the site

2.4.2 Identification and Screening of Technologies

2.4.2.1 Initial Screening: Perched Groundwater, Standing Water, and Excavation/Remediation Water

The applicable general response actions for these media include no action, institutional actions, control/containment, removal, treatment, and discharge. A summary of the screening process based on available analytical information is shown in Figure 2-2. The following sections provide a discussion of this screening process. Technologies and process options that were considered implementable at the site are further evaluated in Section 2.5.

GENERAL RESPONSE ACTION	REMEDIAL TECHNOLOGY	PROCESS OPTION	DESCRIPTION	SCREENING COMMENTS
No Action	None	Not Applicable	Required for consideration by NCP	Required for consideration by NCP
Institutional Actions	Monitoring	Radon Monitoring	Installation of appropriate environmental monitoring	Potentially applicable
		Wellpoint Monitoring	Installation of wells for monitoring groundwater	Potentially applicable
		Leachate Monitoring	Installation of leachate collection/detection system	Potentially applicable
	Access Control	Physical Barriers	Fencing, security, limited road access, etc.	Potentially applicable
		Administrative Controls	Restricted access only, posted signs, etc.	Potentially applicable
Containment	Run-On/Runoff Control	Sedimentation Basin	Temporary storage of runoff to allow settling	Potentially applicable
		Diversion/Collection	Surface water routing controls	Potentially applicable
		Grading	Topography modification for route control	Potentially applicable
		Revegetation	Vegetative cover provides surface stability	Potentially applicable
	Capping	Synthetic Cover	Synthetic liner placed over area of concern	Not applicable, because of design life
		Concrete-Based Cover	Concrete slab poured over area of concern	Potentially applicable
		Asphalt-Based Cover	Asphalt poured over area of concern	Potentially applicable
		Soil-Based Cover	Compacted soil/bentonite cover over area of concern	Potentially applicable
		Chemical Sealant	Chemical stabilizers mixed with surface soils	Potentially applicable
		Multimedia Cap	Cap formed with various layers (see above)	Potentially applicable
	Subsurface Flow Control	Subsurface Drains	Gravity driven collection system	Potentially applicable
		Pumping Wells	Extraction/injection of water into ground	Potentially applicable
		Slurry Walls	A soil/bentonite grout wall emplacement	Potentially applicable
		Sheet Pilings	Steel forms driven into ground and joined	Not applicable at required depths
		Grout Curtains	Close-spaced grout injections isolate area	Potentially applicable
		Groundwater Discharge	Discharge to outfall or subsurface environment	Potentially applicable

FIGURE 2-2. INITIAL SCREENING OF TECHNOLOGIES AND PROCESS OPTIONS

FL/RMPC-0115-2/2-2a

000065

6438

GENERAL RESPONSE ACTION	REMEDIAL TECHNOLOGY	PROCESS OPTION	DESCRIPTION	SCREENING COMMENTS
Containment/ Treatment	Run-On/Runoff control	Sedimentation Basin	Temporary storage of runoff to allow settling	Potentially applicable
		Diversion/Collection	Surface water routing controls	Potentially applicable
		Grading	Topography modification for route control	Potentially applicable
		Revegetation	Vegetative cover provides surface stability	Potentially applicable
	Capping	Synthetic Cover	Synthetic liner placed over area of concern	Not applicable, because of design life
		Concrete-Based Cover	Concrete slab poured over area of concern	Potentially applicable
		Asphalt-Based Cover	Asphalt poured over area of concern	Potentially applicable
		Soil-Based Cover	Compacted soil/bentonite cover over area of concern	Potentially applicable
		Chemical Sealant	Chemical stabilizers mixed with surface soils	Potentially applicable
		Multimedia Cap	Cap formed with various layers (see above)	Potentially applicable
	Subsurface Flow Control	Subsurface Drains	Gravity driven collection system	Potentially applicable
		Pumping Wells	Extraction/injection of water into ground	Potentially applicable
		Slurry Walls	A soil/bentonite grout wall emplacement	Potentially applicable
		Sheet Pilings	Steel forms driven into ground and joined	Not applicable at required depths
		Grout Curtains	Close-spaced grout injections isolate area	Potentially applicable
		Groundwater Discharge	Discharge to outfall or subsurface environment	Potentially applicable
	In Situ Stabilization	Shallow-soil mixing	Chemical-, and/or fly ash-based stabilization	Potentially applicable
		Vitrification	High temperature crystallization/glassification of solids	Potentially applicable
		Surcharging	Compaction of material by addition of soil cover	Potentially applicable

FL/FMPC-0115-2/2-2b

FIGURE 2-2.
(CONTINUED)

Potentially applicable

GENERAL RESPONSE ACTION	REMEDIAL TECHNOLOGY	PROCESS OPTION	DESCRIPTION	SCREENING COMMENTS
Removal/ Treatment/ Disposal	Mechanical Removal	Loader/Dozer	Tractor- or wheel-mounted excavation vehicles	Potentially applicable
		Crane w/Clamshell System	Tractor-, wheel-, or skid-mounted hoisting system	Potentially applicable
		Conveyor System	Belt-type conveyor system excavates material	Potentially applicable
		Backhoe	Tractor- or wheel-mounted excavation vehicles	Potentially applicable
		Dragline System	Excavating tool pulled across material	Potentially applicable
	Hydraulic Removal	Jetting Ring w/Cutterhead	Water pump and vacuum system	Potentially applicable
	Pneumatic Removal	Pneuma/Dozer Dredging	In situ sludge pumping system	Not applicable because of material consistency
		Airlift Dredging	Expanding air pulls material behind it	Not applicable, requires depths > 20-30 ft
		Vacuum w/Cutterhead	Negative pressure displacement system	Potentially applicable
	Waste Stabilization	Asphalt-Based Solidification	Asphalt mixed with soil and solidified	Potentially applicable
		Cement-Based Solidification	Cement and fly ash mixed with soil and solidified	Potentially applicable
		Thermoplastic Encapsulation	Polymers mixed with soil and solidified	Potentially applicable
		Vitrification	High temperature crystallization/glassification	Potentially applicable
	Silo Demolition	Hydraulic Splitter	High pressure water used to cut structure	Potentially applicable
		Wrecking Ball	Crane-mounted weight used to collapse structure	Not applicable, radioactive dust hazard
		Explosive Charges	Chemical explosives fracture structure	Not applicable, radioactive dust hazard
		Nonexplosive Demolition Agent	Expanding agents introduced into structure	Potentially applicable
		Gas Torch	Torch used to cut structure/rebar	Potentially applicable
	On Property Disposal	Above/Below Grade Vault	Above- or below-ground engineered facility	Potentially applicable
		Tumulus	Engineered facility, capped when filled	Potentially applicable
		Temporary Storage	Interim on-site storage facility	Potentially applicable
		Lined/Unlined Pits/Trenches	Simple non-structural disposal units	Not applicable for remediation
	Off Site Disposal	Rail Transport	Railroad transportation along available routes	Potentially applicable
		Truck Transport	Truck transportion along available routes	Potentially applicable

FL/FMPC-0115-2/2-2c

FIGURE 2-2.
(CONTINUED)

GENERAL RESPONSE ACTION	REMEDIAL TECHNOLOGY	PROCESS OPTION	DESCRIPTION	SCREENING COMMENTS
Removal/ Treatment/ Disposal (Cont)	Physical Treatment	Air Stripping	Volatile mass transfer process	Not applicable for inorganic materials
		Solid/Liquid Separation	Separation of solids and liquids	Potentially applicable
		Oil/Water Separation	Gravity differential separates free oil and water	Not applicable, no free oil phase
		Polymerization	Combines monomers to form polymers	Not applicable, few polymerizable materials
		Reverse Osmosis	Diffusion through semipermeable membrane	Potentially applicable
		Selective Ion Removal	Ion-specific ion exchange process	Potentially applicable
		Soil Aeration	Air injectors remove volatile organics	Not applicable for inorganic materials
		Steam Stripping	Steam injection removes volatile organics	Not applicable for inorganic materials
	Chemical Treatment	Chemical Dechlorination	Reduces the amount of chlorinated compounds	Not applicable, few chlorinated compounds
		Oxidation/Ozonation/Photolysis	Organics destroyed by chemical oxidants	Not applicable for inorganic materials
		Hydrolysis	Decomposition of compounds using water	Not applicable, material fully hydrolized
		Leaching/Extraction	Impurities removed through solubility/affinity	Potentially applicable
		Neutralization	Acid or base addition to adjust pH	Potentially applicable
		Precipitation	Removal of metals by solubility adjustments	Potentially applicable
		Reduction	Reduction of the ionic state of a compound	Not applicable, few reducable materials
	Thermal Treatment	Drying/Calcination	Removes water and decomposes carbonates	Potentially applicable
		Incineration	Destroys hazardous organics and reduces volume	Not applicable for inorganic materials
		Thermal Desorption	Heating of a solid to drive off volatile organics	Not applicable for inorganic materials
	Biological Treatment	Biodenitrification	Nitrates/nitrites reduced to molecular nitrogen	Potentially applicable
		Biological Detoxification	Microbial action degrades organics	Not applicable for inorganic materials
		Land Farming	Microorganisms cultured in soil	Not applicable for inorganic materials
		Permeable Treatment Beds	Destroy and remove biodegradable organics	Not applicable for inorganic materials

FIGURE 2-2.
(CONTINUED)

FL/FMPC-0115-2/2-2d

000068

6438

No Action

The no-action response was retained for consideration during the development and analysis of alternatives as required by the NCP. The no-action response does not provide additional remediation, monitoring, or security activities at the site to further minimize risk to public health or the environment. The no-action response will be further evaluated as a baseline for comparison with other alternatives for remediation.

Institutional Actions

The institutional actions screened for the groundwater medium include monitoring and use of access restrictions. Both of these actions are applicable for groundwater. Monitoring includes the use of existing wells or the installation of new wells. These well networks can be used to monitor the performance of collection/treatment systems for groundwater, to detect changes in contaminant releases from the site, and/or for compliance monitoring. Use/access restrictions include access control and deed restrictions. Each of these actions is retained for further evaluation.

The access control technology includes the following process options:

- Physical barriers such as fencing, security, limited road access
- Administrative controls such as restricted access and posted signs

Process options for monitoring technology include:

- Radon monitoring
- Wellpoint monitoring, involving the installation of wells for monitoring groundwater
- Leachate monitoring, which involves the installation of leachate collection and detection systems

Containment

The waste containment measures screened for the perched groundwater medium included primarily physical measures that restrict contaminant migration and minimize potential impacts on receptors. The control and containment technologies evaluated include subsurface drains, pumping wells, capping, alteration of the natural drainage system, and vertical and horizontal barriers.

Pumping wells, vertical barriers, and capping were retained for consideration for use in extracting uncontaminated perched groundwater from the aquifer for purposes of modifying groundwater flow patterns or to provide water for injection to direct flow away from receptors.

Process options retained in this section fall into the following three categories:

Category I: Run-on/Runoff control process options:

- Sedimentation basin for the temporary storage of runoff to allow settling
- Surface water routing controls for diversion and/or collection
- Grading the topography for route control
- Vegetative cover to provide surface stability

Category II: Capping process options:

- Concrete-based cover in which a concrete slab is poured over the area of concern
- Asphalt-based cover in which asphalt is poured over the area of concern
- Soil-based cover in which only naturally occurring soils are used
- Chemical sealant
- Multimedia cap that combines materials to form various layers

Category III: Subsurface flow control process options:

- Slurry walls
- Grout curtains
- Subsurface drains
- Pumping wells

The process options eliminated from further consideration included sheet piles and synthetic liners (by themselves). A detailed discussion on the screening results is included in Section 2.4.3, Technology Issues.

Removal

The technology retained for perched groundwater removal is pumping wells. Pumping wells will be used in extracting contaminated perched groundwater within the operable unit for subsequent treatment and discharge. The technology for removing the additional water mentioned above is by using conventional pumping equipment.

Treatment

The treatment response action included the technologies of biological, physical, physiochemical, and chemical processes that reduce the volume, toxicity, or mobility of a contaminant by altering its physical or chemical properties.

A large number of technologies and process options considered in the initial screening were ineffective for removing uranium, which is the principal contaminant of concern, from the perched groundwater, standing water, or excavation/remediation water. Only technologies applicable for

uranium removal were considered in the initial development and screening of alternatives. Aerobic and anaerobic biological treatment processes are ineffective for removing inorganic compounds, particularly chemical elements such as uranium. The processes of oxidation and chemical reduction are also ineffective for treating uranium. Other treatment processes that are ineffective for the removal of uranium contamination include solvent extraction and freeze crystallization. Electrodialysis uses electrical power and a membrane. It generates a concentrated reject stream needing further treatment. All of these technologies and process options have been eliminated at this phase of the study. The process of distillation was also eliminated because of the large volume of water requiring treatment (approximately 200 gallons per minute [gpm]) and the corresponding energy usage requirements.

The potentially applicable process options retained for uranium removal include biosorbant, absorption, precipitation, coagulation/polymerization, reverse osmosis, advanced membrane filtration, and ion exchange. Additionally, several treatment processes were found to be potentially applicable as ancillary pre- or posttreatment processes. These include dual media filtration, belt filter press, drum filter, sedimentation, biodenitrification, and neutralization. These ancillary process options are not carried through the evaluation of process options and the assembly of alternatives but may be included during the detailed analysis of alternatives as necessary for the complete conceptualization, costing, and evaluation of a water treatment system for this operable unit.

Discharge

Discharge refers to the release of treated or untreated groundwater to either a surface water body via a permitted outfall or to the subsurface environment via deep well injection. The options of discharge to the Great Miami River via an existing or new pipeline have been retained for consideration, as well as the use of pumping wells for reinjection of treated groundwater back into the aquifer. Each is considered potentially applicable for water discharge. The discharge of treated water to Paddys Run represents a variation of the discharge technology and will not be independently evaluated.

Summary of Technology Screening For Perched Groundwater, Standing Water, and Excavation/ Remediation Water

The previous sections provide a discussion of the rationale for elimination of numerous technologies and process options inapplicable for remediation of the water within this operable unit. The technologies and related process options that have been retained for further evaluation and subsequent development of alternatives for remediation are presented in Figure 2-2. The general technologies retained for the groundwater medium include monitoring, use/access restrictions,

pumping wells, physicochemical and chemical treatment processes, and discharge to surface water. The no-action response has also been retained and will be considered throughout the FS process.

2.4.2.2 Initial Screening: Soils, Sediments, and Pit Waste

This section includes a discussion of the initial screening of technologies and process options considered potentially applicable for remediation of site soils and sediments. This remediation includes the solids and sludges in the waste pits as well as contaminated soil that may be under and around the waste pits. Summaries of each process for both soil and sediments are presented in Figure 2-2 and are jointly discussed in the following sections.

No Action

The no-action response is applicable to the soils, sediments, and pit wastes as required by the NCP. The no-action response does not provide additional remediation, monitoring, or security activities at the site to further minimize risk to public health or the environment. The NCP requires that the no-action response be carried through the detailed analysis of alternatives; therefore, it will not be eliminated at this stage. The no-action response will be further evaluated as a baseline for comparison with other remedial action alternatives developed for these media.

Institutional Actions

This general response action includes access/use restrictions for soils, sediments, and pit waste. The access/use restriction response includes fencing and deed restrictions and will minimize access to and use of the areas of concern. The implementation of this response will result in no changes to the existing site environment. Fencing may be applicable in localized areas of soil contamination. Deed restrictions and land acquisitions are also considered for soils only. Deed restrictions will be retained for further evaluation; however, land acquisition is eliminated because data have shown soil contamination only within the FMPC boundary.

Containment

The containment response is applicable for both soils, sediments and pit wastes. Major control and containment remedial technologies evaluated for these media include vertical barriers, capping, and surface water control systems.

Vertical barriers, considered for the pits, can be used to divert groundwater flow away from a contaminated area and/or to isolate the waste. Vertical barriers, such as a slurry wall, are carried forward for further evaluation.

Capping involves the installation of a barrier over the surface of the contaminated area. Capping is designed to control erosion, prevent the generation of leachate due to surface water infiltration, and alleviate or eliminate possible direct and indirect exposures to the contaminants via inhalation, ingestion, or dermal contact. Capping techniques considered for evaluation include single-layer and multilayer caps. The single-layer cap is potentially applicable for some types of contaminants and areas of concern for both soils and sediment. Single-layer caps may include the use of concrete or asphalt. Clay or soil caps are applicable only to soils. Multilayered caps are a regulatory requirement for mixed or hazardous waste.

Surface water control can be used to minimize contamination of surface waters by reducing the erosion and off-property transport of soils that have been contaminated. This technology includes the use of diversion and collection systems, grading, and site revegetation. Because these are considered support actions, they are not carried further in the evaluation of process options but will be included, as necessary, during the detailed evaluation of alternatives.

Removal

Complete or partial removal of contaminated material prevents migration of contaminants toward potential receptors. This can be accomplished using either mechanical excavation equipment or, in the case of contaminated sediments and the wet pits, dredging equipment.

Mechanical excavation involves the use of common construction equipment, such as backhoe or dozer to remove the soil or sediments. These methods are potentially viable for soils, waste, and sediments not in contact with surface waters.

The mechanical removal technology involves the following process options:

- Loader/oozer, which includes wheel- or tractor-mounted excavation vehicles
- Crane with clamshell system, which uses tractor-, wheel-, or skid-mounted hoisting system
- Conveyor system, which uses belt-type conveyor to excavate material
- Backhoe, tractor- or wheel-mounted
- Dragline system excavating bucket pulled across waste

The hydraulic removal technology involves using a mining jetting ring and pump equipped with a cutterhead.

The pneumatic removal technology includes the following process options for the remediation of Operable Unit 1:

- Pneumatic/oozer dredging, which is an in situ removal/pumping system
- Airlift dredging, which uses expanding air to pull material behind it
- Vacuum with cutterhead, which uses negative pressure to displace the material through a pipe

Treatment

The treatment options include biological, chemical, physical, physicochemical, solidification/stabilization, and thermal measures that reduce the volume, toxicity, or mobility of a contaminant by altering its physical or chemical properties. Applicable technologies for soils and sediments are discussed below.

The three techniques of in situ bioremediation, soil aeration, and land farming are suitable for remediation of organics; however, they do not address the uranium contamination found at the site. All biological treatment methods will therefore be deleted from further consideration.

In situ vitrification was evaluated as a technology for the chemical treatment of soils and sediments. In this process, a high current of electricity is passed through the contaminated media in situ. The heat generated will drive off any volatile organic compounds and water and will solidify the soils into a glassy, solid matrix resistant to deterioration from weathering or leaching. This technology may be feasible for soils.

Physical treatment technologies are applicable when the properties of the contaminant compounds make them amenable to separation, replacement, or volatilization. The following physical treatment technologies were screened for soils and sediments:

- Vapor extraction
- Volatilization
- Gravimetric separation

Vapor extraction and volatilization are applicable for volatile organics only and will not remove uranium; therefore, these options were deleted from further consideration. The process of gravimetric separation uses a pulsating sieve to separate materials by density through stratification in a fluid media. Because uranium compounds tend to fall out in the most dense fraction, this may be a viable option for minimizing the waste requiring subsequent disposal. It is retained for further evaluation.

The physicochemical treatment process of soil washing was evaluated for the treatment of soils/sediments. Soil washing involves the extraction of organic and inorganic compounds from soils or sediments by leaching. Soil washing may be viable for the removal of soluble uranium compounds and is retained for further evaluation for both the surface soils and sediments.

Solidification/stabilization involves techniques to seal the contaminated soils and sediments in a solid, stable mass that reduces the mobility of the contaminants in the environment. Some of these techniques physically surround the contaminant particles with a solidifying agent. Others chemically fix the contaminants by reaction with a solidifier. The following solidification/stabilization techniques were reviewed for treatment of the excavated surface soils and sediments:

- Cement-based
- Thermoplastic
- Vitrification

These technologies are suitable for solidifying or fixing either inorganic wastes or radioactive materials. All will be retained for further analysis. If any organics are found at the site, cement-based and thermoplastic technologies may have limited application for pretreatment of the waste because the presence of organics may interfere with the solidification or fixation process.

Thermal treatment is a process in which molecular bonding of organic or inorganic compounds is altered through thermal decomposition and oxidation. The end products of this process typically include carbon dioxide, elemental carbon, ionized halogen, phosphorous, sulfur, and other inorganics depending on the original composition of the waste material. The following process options were evaluated for on-site thermal treatment of surface soils and sediments:

- Thermal desorption
- Mobile incinerator (rotary kiln)

These thermal treatment methods are not applicable to soils and sediments contaminated by elemental metals such as uranium and will therefore be deleted from further evaluation as a primary treatment technology but may be used as an ancillary process to remove organics before stabilization.

<u>On-Property Disposal</u>

Disposal technologies include physical measures (other than in situ) that will provide a permanent preengineered environment to restrict contaminant movement or migration thus minimizing potential

impacts on a receptor. For this screening process, an on-property landfill has been defined as an engineered disposal facility designed to meet established federal and state regulations. On-property disposal of contaminated soils and sediments is considered applicable and has been retained for further consideration.

The on-property disposal technology contains the following process options:

- Above-grade vault, which is an engineering facility built above ground level
- Below-grade vault, which is an engineering facility built below ground level
- Temporary storage for interim on-property storage
- Lined/unlined pits or trenches, which are nonstructural disposal units

Off-Site Disposal

Off-site disposal technologies are assumed to be practiced at existing facilities that are approved by the appropriate federal and state regulatory agencies, such as the EPA. For this screening process, an off-site landfill has been defined as a preengineered disposal area that meets the applicable regulations. Off-site disposal of contaminated soils and sediments are retained for further consideration.

Summary of Technology Screening for Surface Soils, Sediments, and Pit Wastes

Based on the rationale presented in the previous sections, numerous technologies and process options were judged not to be applicable to uranium or other site-specific conditions and have been deleted from further consideration. Figure 2-2 presents the technologies and related process options that have been retained for further evaluation and for subsequent development of remedial action alternatives for soils and sediments, respectively. The retained technologies for both soils and sediments include access/use restrictions, capping, extraction, physical and physicochemical treatment, solidification/stabilization techniques, and landfilling. The no-action response has also been retained for both media and will be considered as a remedial action alternative in the next phase of the FS.

2.4.2.3 Initial Screening: Air (Fugitive Dust)

This section includes a discussion of the initial screening of technologies and process options considered potentially applicable for air and fugitive dust emissions. Summaries of technologies and process options are presented in Figure 2-2 and are jointly discussed in the following sections.

DRAFT

No Action

The no-action response is applicable to air (fugitive dust) as required by the NCP. The no-action response does not provide additional remediation, monitoring, or security activities at the site to further minimize risk to public health or the environment. The NCP requires that the no-action response be carried through the detailed analysis of alternatives; therefore, it is not eliminated at this stage. The no-action response will be further evaluated as a baseline for comparison with other remedial action alternatives developed for air.

Institutional Actions

This general response action includes access/use restrictions for air (fugitive dust). The access/use restriction response includes land acquisition and deed restrictions and minimizes access to and use of the areas of concern. Deed restrictions and land acquisitions are not retained as stand-alone remediation technologies because fugitive dust could travel beyond any realistic site boundary.

Containment

The containment response is applicable for fugitive dust. Major control and containment remedial technologies evaluated for this media include capping, dust suppressing agents, and containment structures.

For fugitive dust mitigation, only the single layer cap is retained as a representative process option for further evaluation because it is adequate to control fugitive dust and much less complex to construct than the multilayer cap.

Removal

Because the source of contamination in air is fugitive dust from the surface of the waste pits and possibly exposed sediments, the technologies retained for removal of air contaminants are the same as those retained for the removal of contaminated soils and sediments.

Treatment

The treatment response action for air (fugitive dust) is the same as for soils, sediments, and pit wastes. The technologies and process options retained for the treatment of the soils, sediments, and pit wastes are the same as those for the treatment of fugitive dust.

On-Property Disposal

On-property disposal technologies and process options for fugitive dust are the same as those for soils, sediments, and pit wastes.

Off-Site Disposal

Off-site disposal technologies and process options for fugitive dust are the same as those for soils, sediments, and pit waste.

Summary of Technology Screening for Air (Fugitive Dust)

Based on the rationale presented in the previous sections, numerous technologies and process options were judged not to be applicable to uranium or other site-specific conditions and have been deleted from further consideration. Figure 2-2 presents the technologies and related process options that have been retained for further evaluation and for subsequent development of remedial action alternatives for air (fugitive dust). The retained technologies for fugitive dust include access/use restrictions, capping, extraction, physical and physicochemical treatment, solidification/stabilization techniques, and landfilling. The no-action response has also been retained for both media and will be considered as a remedial action alternative in the next phase of the FS.

2.4.3 Technology Issues

Based on the remedial action technology screening methodology defined in Sections 2.4.1 and 2.4.2, the technology issues presented in the following section have been assembled to provide maximum screening impact on the development of remedial action alternatives. The issues are addressed under each of two general topics: nonremoval issues and removal issues. In addition, this section identifies the assumptions required to define site conditions in support of this FS report.

2.4.3.1 Nonremoval Technology Issue 1: Naturally Occurring Materials Versus Synthetic Closure Cap Components

The exclusive use of naturally occurring materials for the cap, such as aggregates (sands/gravels) and clay, versus synthetic drainage layers (geotextiles) and flexible membrane liners (FML), are evaluated. Description of technologies can be found alphabetically in Appendix A, Page A-2.

Decision Factors

The critical decision factors used in evaluating this technology issue are material availability, longevity, and ability to construct:

- Material availability - All materials, whether naturally occurring or synthetic, are readily available from regional vendor sources with the possible exception of clays

capable of achieving an inplace vertical permeability of 1 X 10^{-7} centimeters per second. However, if the specified clay is not readily available, it can be produced from indigenous, sandy site soils mixed with bentonite without any special technology or significant cost increase.

- Longevity - The main advantage to the exclusive use of naturally occurring materials is longevity. If the waste is structurally stabilized to minimize future consolidation and the cap properly constructed and maintained, the service life performance can be expected to greatly exceed that of synthetic materials. Geotextiles and FMLs have a relatively short documented performance history of approximately 30 to 40 years depending on material composition. In addition past experience has shown that FMLs are more dramatically impacted by certain environmental stresses, such as root and burrowing animal penetration, which can further reduce the useful service life.

- Constructability - The placement of synthetic drainage layers and FMLs can significantly speed construction and reduce cost. However, FMLs specifically have the potential of being damaged during construction, if not carefully protected during storage, handling, and installation operations. An FML cannot be leak tested during and after the critical period of drainage layer installation. All cap components, both naturally occurring and synthetic materials, require that extensive quality assurance/quality control (QA/QC) programs be initiated during and after remediation.

Screening Results

Although geotextiles and FMLs may be used to facilitate natural materials placement, no synthetic materials should be relied on as a long-term component. Present regulatory criteria such as 10CFR61.7(b)(5) may require minimizing both maintenance and storm water infiltration, as well as providing structural longevity for intrusion barrier purposes in excess of 500 years. Therefore, multiple liner caps that rely on synthetic components are screened from further consideration. The capping system evaluated as part of this task and shown in Figure 2-3 utilizes a four-foot-thick clay layer, five-foot-thick roller compacted concrete intrusion barrier, and a combination two-foot natural aggregate filter blanket/drainage layer design.

2.4.3.2 Nonremoval Technology Issue 2: Physical Stabilization Versus No Stabilization of the Pit Wastes

The generic use of in situ physical stabilization treatments versus no in situ treatment before closure cap placement is examined in the following section. Examples of in situ physical stabilization treatments include surcharging, dynamic compaction, vacuum extraction, vertical drains, and shallow soil mixing. Description of technologies can be found in Appendix A.

Decision Factors

The critical decision factors used in this technology issue evaluation are short-/long-term closure cap structural integrity and discharge of waste/soil matrix pore water into the groundwater:

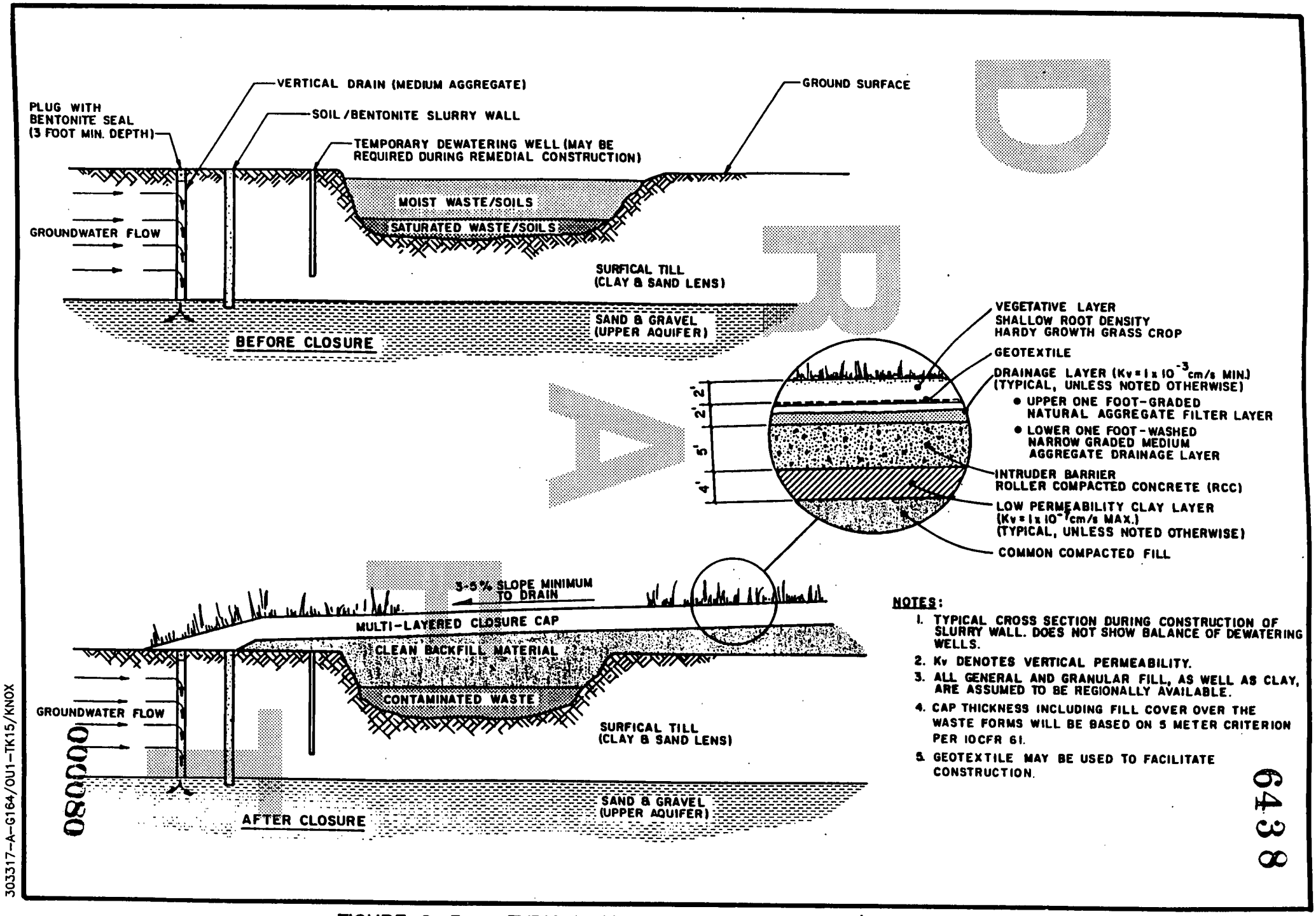

FIGURE 2-3. TYPICAL CROSS SECTION BEFORE/AFTER CLOSURE

- Closure cap structural integrity - Although the Clearwell and Pits 5 and 6 will require removal and treatment of the standing waters, the CIS data indicate that most pit wastes are extremely wet and compressible. As the closure cap is placed, the induced load will initiate waste compression (consolidation). Dependent on factors such as total cap weight, time to construct, water content of the waste, and porosity of the surrounding pit soils, the cap may experience considerable settlement for years after completion. This extended settlement period will require considerable cap maintenance and possible reconstruction efforts. Therefore, the potential exists for increased worker and public exposure to the pit contaminants because of infiltration of storm water through the waste. In time, the waste will achieve stability relative to the surrounding environment and the closure cap will become structurally stable. However, if the waste is fully or partially stabilized during remediation, as in Alternative 2, then the need for future cap maintenance, repair, and the associated costs are greatly reduced. One method of physical stabilization, surcharging, is shown in Figure 2-4.

- Discharges into groundwater - As the waste consolidates under the cap loads, pore water will be squeezed out of the waste/soil matrix into the surrounding pits soils and ultimately into the groundwater table. As discussed in the short-/long-term closure cap structural stability decision factor, waste consolidation may be experienced for years after the completion of cap construction. This may lead to the long-term introduction of contaminated pore water in the till groundwater table and potentially the Great Miami Aquifer. Physical stabilization of the pit wastes before cap placement would minimize, to the extent practical, the introduction of contaminated pore water into the groundwater media.

Screening Results

The generic use of in situ waste stabilization, as compared to no stabilization, will minimize the potential of long-term exposure to the environment and the general public because of a reduction in leachate (pore water) introduced into the groundwater. In addition, physical stabilization will more effectively provide long-term closure cap structural stability, thus reducing future maintenance/repair costs and potential worker exposure.

2.4.3.3 Nonremoval Technology Issue 3: Dynamic Compaction as a Physical Stabilization Technology

Decision Factors

The critical decision factors used in this technology issue evaluation are public health and environmental protection. Dynamic compaction, as defined in Appendix A, involves dropping 5- to 40-ton-weights from heights of 20 to 100 feet, resulting in compaction of surface and subsurface wastes and soils. Although this technology has been proven effective and economical as a physical stabilization technique, it can produce seismic-type vibrations radiating out from the point of impact. Depending on distance from impact (wave form attenuation), soil/waste being compacted, and height/weight of drops, nearby structures may experience physical damage ranging from minor

NOTES:

1. HEIGHT OF SURCHARGE AND TIME TO MAINTAIN IN PLACE ARE DEPENDENT ON THE RESULTS OF ONE-DIMENSIONAL CONSOLIDATION TESTS PER ASTM D2435-80.
2. FOR CLARITY, LEACHATE (WASTE PORE WATER) COLLECTION SYSTEM DETAILS, NOT SHOWN.
3. CLEAN COMMON FILL ASSUMED TO BE REGIONALLY AVAILABLE.
4. SURCHARGED AREAS TO BE SURROUNDED BY SILT FENCING.

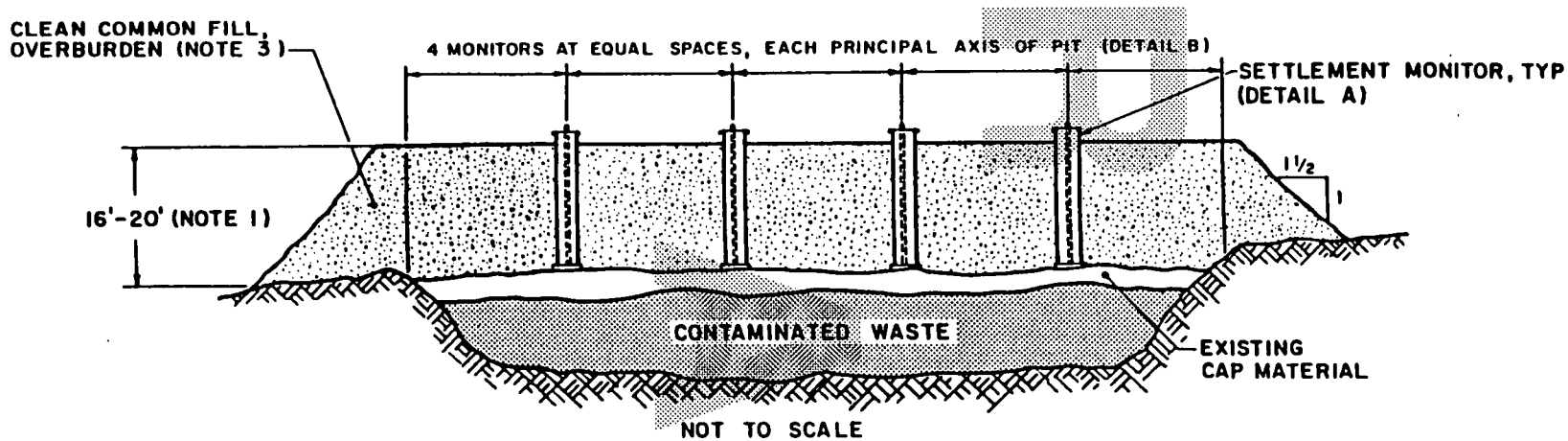

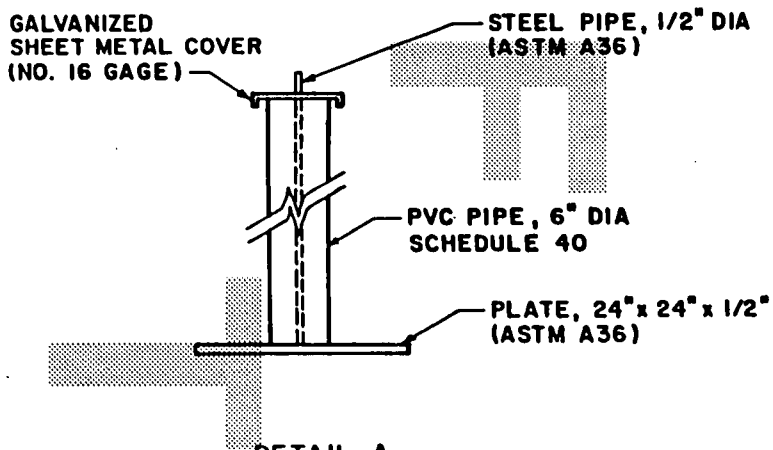

DETAIL A
NTS

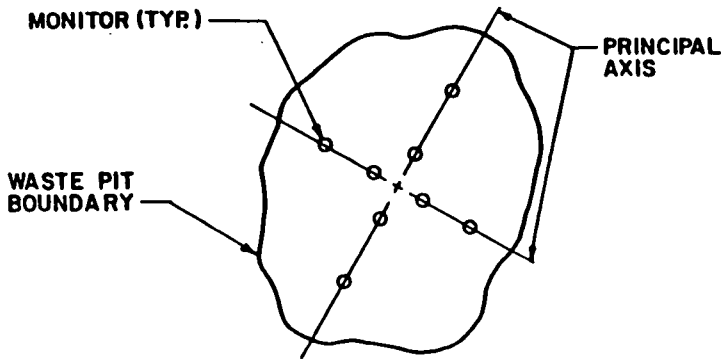

DETAIL B
NTS

FIGURE 2-4. TYPICAL CROSS SECTION DURING SURCHARGING

cracking to structural failure. The K-65 silos of Operable Unit 4 are located immediately south of the waste pits. The structural integrity of the K-65 silos was examined (Camargo 1985; BNI 1990); the findings indicated that the silos are in a deteriorated state with little or no remaining service life. If the silos failed or were damaged during nearby dynamic compaction efforts, radon gas and/or the presently stored radium and thorium-bearing ores could be released into the environment. Any unexpected or unintended silo release would negatively impact public health and increase worker exposure risks, as well as increase overall FMPC environmental remediation costs.

Screening Results

Because of the structurally deteriorated condition of the K-65 silos, in situ densification (stabilization) using dynamic compaction could cause vibratory-induced structural damage to the K-65 silos with resultant contaminant releases to the environment. This would negatively affect public health and environmental protection. Therefore, dynamic compaction should only be considered if the K-65 silos have been remediated or removed before implementation of the compaction.

2.4.3.4 Nonremoval Technology Issue 4: The Addition of Shallow Soil Mixing Technology to Physical Stabilization Options

Decision Factors

The decision factor used for this technology issue consists of a viable technology inadvertently overlooked in the old Task 12 Report, specifically a shallow soil mixing (SSM) technique. SSM is a method of mixing soils or sludges with dry or fluid treatment chemicals to produce a solidified or stabilized end product. SSM can mix soils and sludges of varying moisture contents, ranging from dry soils to fluid sludges, to depths of 30 feet or more. Excluding Pits 1 through 4 and the Burn Pit, which contain actual or assumed quantities of drums, construction rubble, and/or miscellaneous site debris, CIS data indicate Pits 5 and 6 and the Clearwell exclusively contain sludges from plant production and/or site surface soil sediments. Therefore, Pits 5 and 6 and the Clearwell are acceptable candidates for SSM, although preliminary field testing may be required to verify and specify mixing requirements. For a more complete evaluation, see Appendix A, Description of Technologies.

Screening Results

SSM is added to the potential physical stabilization options uniquely applicable to Pits 5 and 6 and the Clearwell.

2.4.3.5 Removal Technology Issue 1: Off-Site Waste Disposal - Trucking Versus Railroad Transport

Decision Factors

The critical factors used for this technology issue include short-term public health, environmental safety, political acceptance, and cost.

- Public health and environmental safety- As discussed in Appendix A, Description of Technologies, off-site waste disposal by truck or rail transport (with installation of a suitable spur line) can provide portal-to-portal service between an assumed disposal facility and FMPC. However, preliminary occupational and public risk calculations, based on published injury/fatality statistics (Table 2-7), found that shipping by truck presents a significantly greater risk to public and worker safety (Table 2-8). The estimated 1,848,000 miles required by rail to deliver 2,000,000 cubic yards of waste is a fraction of the 554,000,000 miles required by truck transport. Therefore, the cumulative risk or potential for accidents becomes greater, as noted from the previously cited table.

- Cost - The following evaluation is based on vendor source information and excludes waste handling, packaging, decontamination, and general contract management fees.

- Rail	
Assumed rail spur installation	$ 40,000,000
Transport (1,848,000 miles)	$348,000,000
Total cost	$388,000,000
- Truck	
FMPC to waste disposal facility (277,000,000 miles)	$485,000,000
Return trip (277,000,000 miles)	$277,000,000
Total cost	$762,000,000

- Political acceptance - While local opposition should be expected, the mass transportation required to implement off-site disposal could be challenged in numerous local political jurisdictions along the proposed transportation route, creating unacceptable site cleanup delays. However, it is felt that political liabilities associated with rail transport would be less than truck transport based on public health issues, including: number of trips, inspection and selection of routes, and general public perception of transport safety, specifically during inclement weather.

Screening Results

Based on the preliminary risk assessment, the extremely large difference in waste transport as well as the varying degree of political liability associated with transport modes, truck transport is deleted as a viable off-site technology option. Therefore, only direct rail transport and rail transport with a truck transfer station near the disposal site are retained for further consideration.

TABLE 2-7.

RISK FACTORS FOR WASTE TRANSPORTATION - OPERABLE UNIT 1

Risk Factors	Fatalities [a]		Injuries [a]	
	Truck [b]	Rail [c]	Truck [b]	Rail [c]
Occupational	0.0021131	0.0000460	0.0412245	0.0045968
Public	0.0128553	0.0018331	0.1178261	0.0067484

Notes:

[a] 4,400 round trip miles assumed.

[b] Risk factor per million miles at 30 tons of waste per haul load.

[c] Risk factor per thousand railroad miles at 90 tons of waste per car and 100 cars per haul load.

Sources:

U.S. Dept. of Transportation Federal Highway Administration Office of Motor Carriers, Accidents of Motor Carriers of Property, Washington, D.C., (Publication No. FHWA-MC-88-008), 1986.

Federal Highway Administration Office of Highway Information Management, Federal Highway Statistics Report, Washington, D.C., 1988.

U.S. Dept. of Transportation Federal Railroad Administration Office of Safety, Accident/Incident Bulletin, Washington, D.C., (Publication No. 157), 1988.

TABLE 2-8.
OPERABLE UNIT 1 RISK OF TRANSPORTING WASTE

	Mileage		Public	Occupational	Total
CEMENT STABILIZATION					
Truck	915,200,000	Injuries	108.83	37.73	146.56
		Fatalities	11.77	1.93	13.70
Train	1,970,150	Injuries	13.30	9.06	22.36
		Fatalities	3.61	0.09	3.70
VITRIFICATION					
Truck	598,400,000	Injuries	70.50	24.67	95.17
		Fatalities	7.69	1.26	8.95
Train	1,287,650	Injuries	8.69	5.92	14.61
		Fatalities	2.36	0.06	2.42

Sources: See Table 2-7.

2.4.4 Site Condition Assumptions

The following assumptions are used until more operable-unit-specific data become available.

- Assumption 1: For costing purposes, an approved waste disposal facility is assumed to be available in the western United States at a 2200-mile distance from the FMPC.

- Assumption 2: When considering the extent of contaminant migration into the surrounding pit soils, the following shall be considered contaminated:
  - A five-foot-wide remediation buffer around the outer perimeter of the Operable Unit 1 pits and/or their respective berms. This buffer will be extended to 10 feet horizontally on the southwest side of the operable unit area because of assumed groundwater flow in the glacial till cap.
  - The areas between the various pits
  - The soils below the bottom of all pits to the top of the sand and gravel unit containing the Great Miami Aquifer (estimated elevation 548 feet MSL)

- Assumption 3: Pit source term definition (i.e., the quantity of both radiological and hazardous chemical wastes) will be based on the statistical 95 percent confidence level of all CIS boring data.

- Assumption 4: Pits 1 through 6, the Clearwell, and the Burn Pit are classified as radioactive waste. Regarding hazardous wastes, Pit 4 has been determined to contain mixed waste. The balance of Operable Unit 1 wastes contains hazardous constituents that do not necessarily cause the waste to be designated as mixed waste.

2.5 EVALUATION OF TECHNOLOGIES AND SELECTION OF REPRESENTATIVE TECHNOLOGIES TECHNOLOGIES AND PROCESS OPTIONS

The purpose of this section is to evaluate the various process options that are considered implementable (Figure 2-2). This evaluation process leads to this selection of one representative process option for each type of technology. These evaluations were based upon engineering judgement and not detailed analysis. Figure 2-5 presents the results of evaluating the process options.

2.5.1 Screening Criteria

The process options were evaluated using effectiveness, implementability, and cost as the criteria. Also, these criteria were applied only to the technologies and the general response actions that they were intended to satisfy; they were not applied to the site as a whole. However, this evaluation process primarily focuses on effectiveness factors with less emphasis on the implementability and cost evaluations. A description of each evaluation criterion used in developing Figure 2-5 follows.

DRAFT

GENERAL RESPONSE ACTION	REMEDIAL TECHNOLOGY	PROCESS OPTION	EFFECTIVENESS	IMPLEMENTABILITY	COST
No Action	None	Not Applicable	N/A	N/A	N/A
Institutional Actions	Monitoring	Radon Monitoring	High	High	Low
		Wellpoint Monitoring	High	High	Moderate
		Leachate Monitoring	Moderate	Low	High
	Access Control	Physical Barriers	High	High	Low
		Administrative Controls	High	High	Low
Containment	Run-On/Runoff Control	Sedimentation Basin	High	High	Moderate
		Diversion/Collection	Moderate	Moderate	Low
		Grading	High	High	Low
		Revegetation	Moderate	High	Low
	Capping	Concrete-Based Cover	High	High	High
		Asphalt-Based Cover	High	High	Moderate
		Soil-Based Cover	Low	High	Low
		Chemical Sealant	Moderate	Moderate	Moderate
		Multimedia Cap	High	High	High
	Subsurface Flow Control	Pumping Wells	Moderate	High	High
		Slurry Walls	Moderate	High	High
		Grout Curtains	Low	Low	High
		Subsurface Drains	High	Moderate	Moderate

FIGURE 2-5. EVALUATION OF PROCESS OPTIONS

FL/FMPC-0115-2/2-5a

000088

6438

GENERAL RESPONSE ACTION	REMEDIAL TECHNOLOGY	PROCESS OPTION	EFFECTIVENESS	IMPLEMENTABILITY	COST
Containment/ Treatment	Run-On/Runoff control	Sedimentation Basin	High	High	Moderate
		Diversion/Collection	Moderate	Moderate	Low
		Grading	High	High	Low
		Revegetation	Moderate	High	Low
	Capping	Concrete-Based Cover	High	High	High
		Asphalt-Based Cover	High	High	Moderate
		Soil-Based Cover	Low	High	Low
		Chemical Sealant	Moderate	Moderate	Moderate
		Multimedia Cap	High	High	High
	Subsurface Flow Control	Pumping Wells	Moderate	High	High
		Slurry Walls	Moderate	High	High
		Grout Curtains	Low	Low	High
		Subsurface Drains	High	Moderate	Moderate
	In Situ Stabilization	Shallow-Soil Mixing	High	High	Moderate
		Vitrification	High	Low	High
		Surcharging	Low	High	High
		Dynamic Compaction	Low	High	Moderate

FIGURE 2-5.
(CONTINUED)

FL/FMPC-0115-2/2-5b

000089

6438

GENERAL RESPONSE ACTION	REMEDIAL TECHNOLOGY	PROCESS OPTION	EFFECTIVENESS	IMPLEMENTABILITY	COST
Removal/ Treatment/ Disposal	Mechanical Removal	Loader/Dozer	Moderate	Low	Moderate
		Crane w/Clamshell System	Moderate	High	Moderate
		Conveyor System	High	High	Moderate
		Backhoe	High	Low	Moderate
		Dragline System	High	High	Moderate
	Hydraulic Removal	Jetting Ring w/Cutterhead	High	High	Moderate
	Pneumatic Removal	Vacuum w/Cutterhead	Low	Low	Moderate
	Waste Stabilization	Asphalt-Based Solidification	Moderate	Moderate	Moderate
		Cement-Based Solidification	Moderate	Moderate	Moderate
		Thermoplastic Encapsulation	Moderate	Moderate	Moderate
		Vitrification	High	Low	High
	On Property Disposal	Above/Below Grade Vault	High	High	High
		Tumulus	High	High	High
		Temporary Storage	High	High	Low
	Off Site Disposal	Rail Transport	High	High	Low

FIGURE 2-5.
(CONTINUED)

FL/FMPC-0115-2/2-5c

000090

6438

GENERAL RESPONSE ACTION	REMEDIAL TECHNOLOGY	PROCESS OPTION	EFFECTIVENESS	IMPLEMENTABILITY	COST
Removal/ Treatment/ Disposal (Cont)	Physical Treatment	Solid/Liquid Separation	Moderate	Moderate	Moderate
		Reverse Osmosis	High	Moderate	Moderate
		Selective Ion Removal	High	Moderate	High
	Chemical Treatment	Leaching/Extraction	Moderate	Moderate	High
		Neutralization	High	High	Low
		Precipitation	Moderate	Moderate	Moderate
	Thermal Treatment	Drying/Calcination	Medium	High	Moderate
	Biological Treatment	Biodenitrification	High	High	Low

FIGURE 2-5.
(CONTINUED)

FL/FMPC-0115-2/2-5d

000091

6438

2.5.1.1 Effectiveness Evaluation

The various process options that have been identified under one type of technology in Section 2.4 were evaluated for effectiveness based on the following:

- The potential effectiveness of the process option for handling the estimated areas or volumes of media and meeting the RAOs
- The potential impacts to human health and the environment during the construction and implementation phase
- The reliability of the process option as it relates to the contaminants and conditions at the site

2.5.1.2 Implementability Evaluation

As per the EPA RI/FS Guidance Document, evaluation of process options based on implementability was not weighed as heavily as the effectiveness evaluation. The implementability evaluation includes both the technical and administrative feasibility of implementing a process option. Because Section 2.4 has already screened process options based on technical implementability, the implementability evaluation in this section places greater emphasis on the institutional aspects. Examples of institutional implementability are factors such as the availability of skilled workers to implement the process option; ability to obtain permits for off-site actions; and the availability and capacity of treatment, storage, and disposal facilities.

2.5.1.3 Cost Evaluation

In general, evaluation of process options based on costs was not weighed as heavily as the effectiveness evaluation. Moreover, the costs were based on engineering judgement. Each process option was evaluated as to whether costs are high, low, or medium relative to other process options in the same technology group.

DRAFT

3.0

3.0 DEVELOPMENT AND SCREENING OF ALTERNATIVES

3.1 DEVELOPMENT OF ALTERNATIVES

Remedial action alternatives have been assembled by combining the selected representative process options developed in Section 2.0 into alternatives representing possible cleanup remedies for Operable Unit 1. The alternatives were developed to address identified problems in Operable Unit 1 with respect to the specified RAOs. Guidance for the development of these alternatives was obtained from the following sources:

- CFR, Title 40, Part 300 (NCP)
- Section 121 of SARA
- EPA, October 1988, Interim Final Guidance for Conducting Remedial Investigations and Feasibility Studies Under CERCLA

As recommended by the EPA Guidance Document and the NCP, acceptable engineering practices, as related to site-specific conditions, were considered during remedial action alternative development.

The selected process options discussed in Section 2.0 have been assembled into six remedial action alternatives for initial screening as shown in Figure 3-1. The remedial actions for sediments, surface soils, and pit waste are combined because the technologies and process options used to formulate the alternatives are applicable to each of these media, and they are best addressed as a unit. The alternatives were formulated by combining the most feasible soil/sediment actions with the most feasible actions for other media such as water and fugitive dust generated during remediation. In some cases, more than one process option was selected to represent a technology type if there were sufficient differences in performance such that one would not adequately represent the other (e.g., stabilization versus vitrification). This process remains flexible for any necessary additions or refinements to these alternatives. The six alternatives developed for the initial screening process for the Operable Unit 1 remedial action are as follows:

- Alternative 0: No Action
- Alternative 1: Nonremoval, slurry wall, and cap
- Alternative 2: Nonremoval, physical stabilization, slurry wall, and cap
- Alternative 3: Nonremoval, vitrification, and cap
- Alternative 4: Removal, waste treatment, and on-property disposal
- Alternative 5: Removal, waste treatment, and off-site disposal

DRAFT

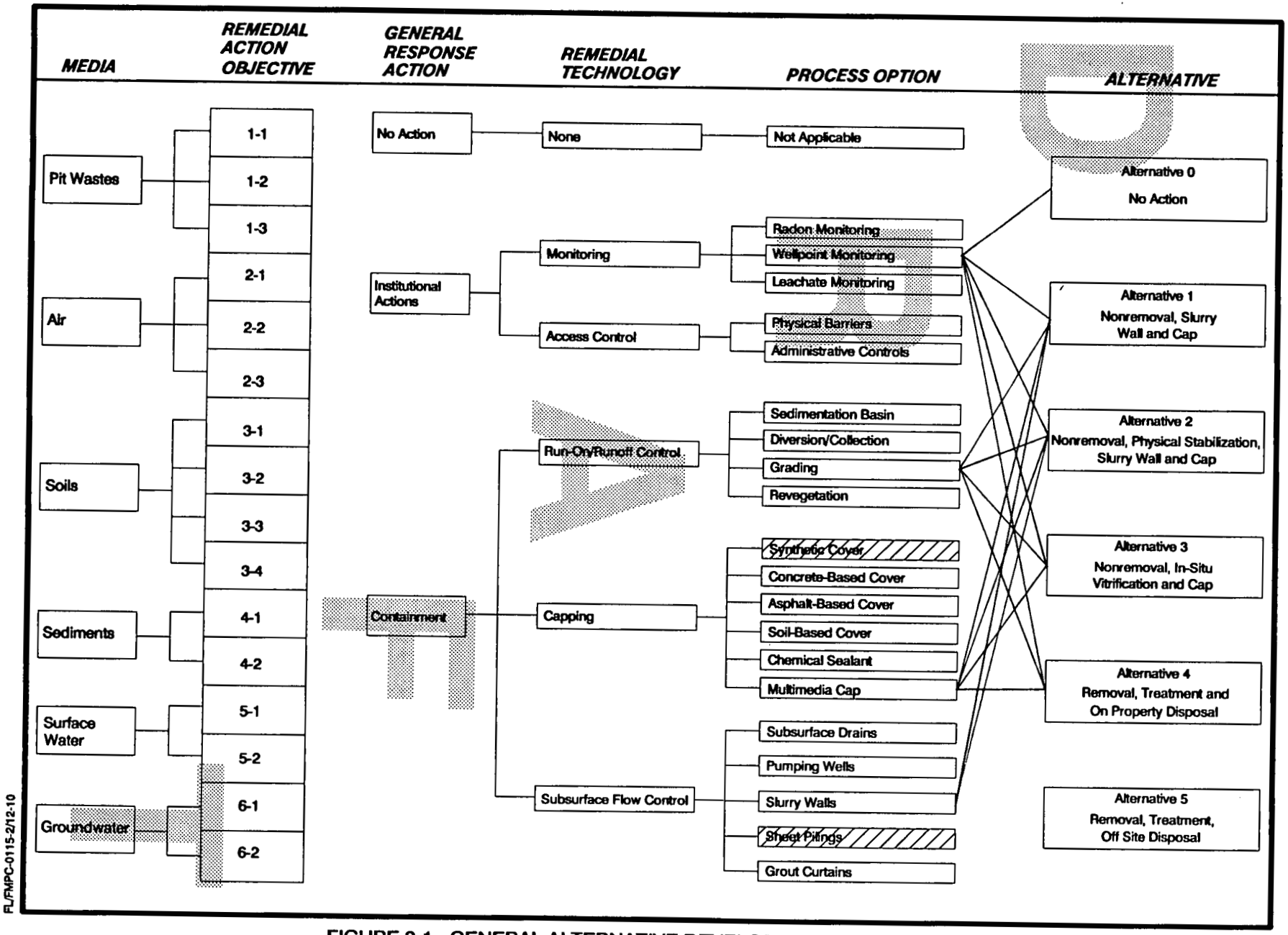

FIGURE 3-1. GENERAL ALTERNATIVE DEVELOPMENT PROCESS

FL/FMPC-0115-2/12-10

000094

6438

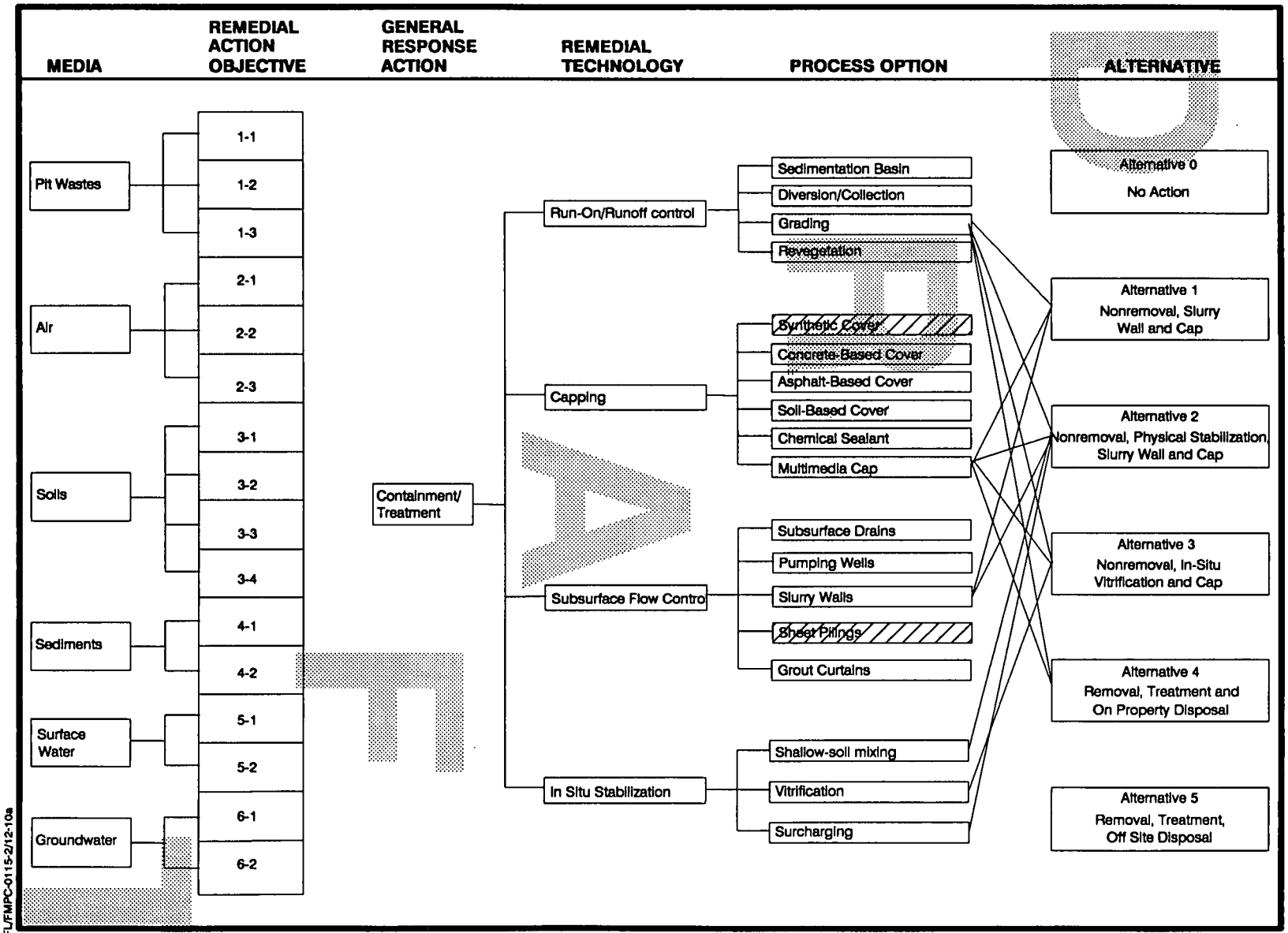

FL/FMPC-0115-2/12-10a

FIGURE 3-1
(CONTINUED)

000095

6438

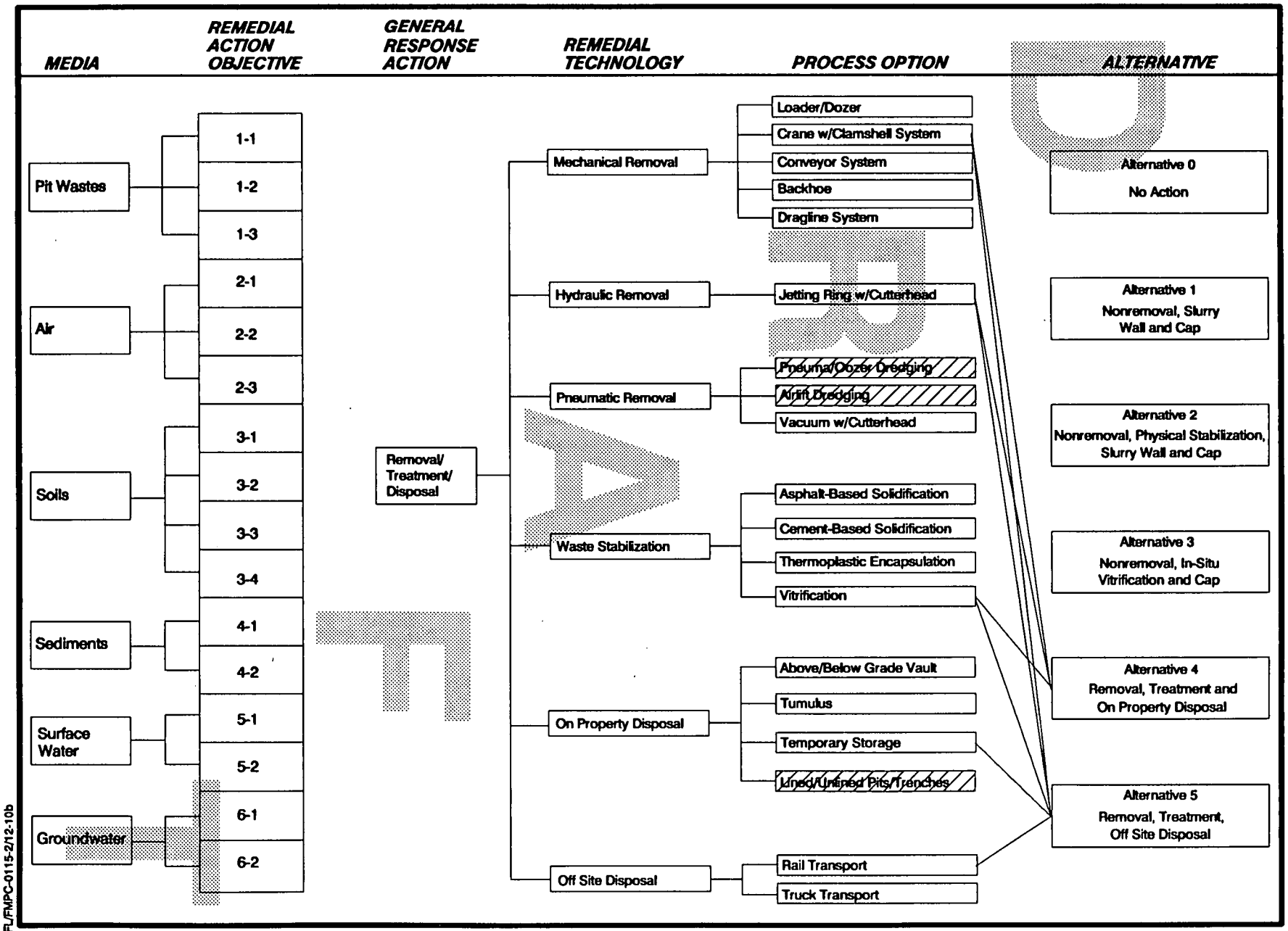

FL/FMPC-0115-2/12-10b

FIGURE 3-1
(CONTINUED)

000096

6438

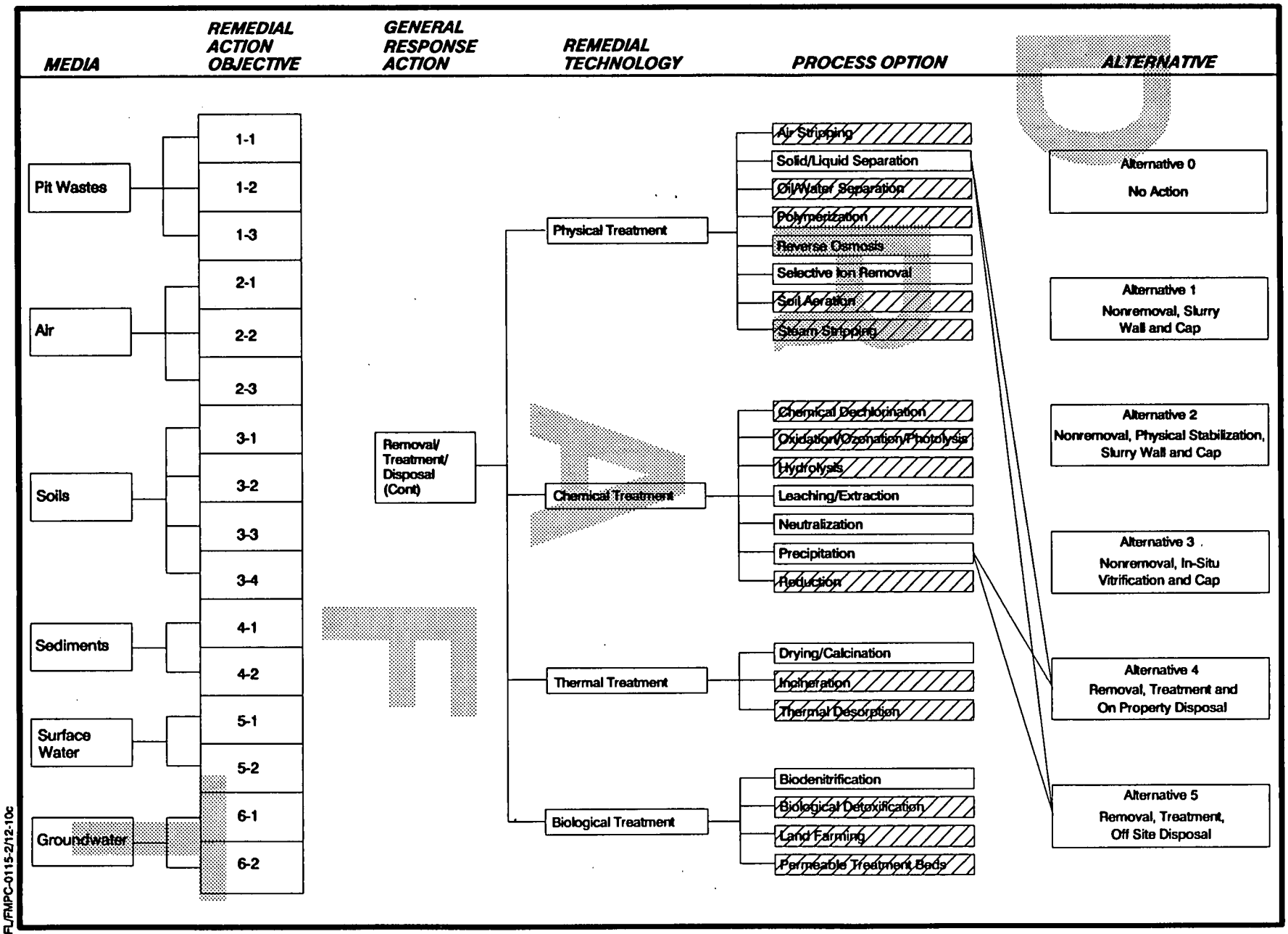

FL/FMPC-0115-2/12-10c

FIGURE 3-1.
(CONTINUED)

000097

6438

To better quantify specific details, the following areas were developed for each alternative:

- Size and configuration of on-property extraction and treatment systems and containment structures
- Remediation time frame and treatment rate
- Spatial requirements for constructing treatment containment structures or support areas
- Packaging and transportation requirements for disposal options

The remediation time frame is interdependent on the size and configuration of the alternatives as well as worker protection concerns. Based on best engineering judgment, these four factors were considered in the preliminary design of each alternative. Two or more options were selected for some alternatives that had considerable variation because of size and/or configuration.

A detailed description of each of the alternatives is included in the following sections.

3.1.1 Alternative 0 - No Action

3.1.1.1 Description

This alternative is the no-action alternative. The pit waste will remain without the implementation of any removal, treatment, containment, or mitigating technologies. This alternative requires one well installation, perpetual site maintenance, and monitoring. It provides a baseline for comparison purposes.

3.1.2 Alternative 1 - Nonremoval, Slurry Wall, and Cap

3.1.2.1 Description

The first nonremoval alternative for Operable Unit 1 is intended to isolate the waste from the environment and to minimize the generation and release of contaminated leachate to the underlying Great Miami Aquifer. This includes the removal and treatment of any standing water, subsurface flow control measures, construction of a closure cap, and storm water runoff and run-on control measures. The subsurface flow control measures combine a slurry wall, subsurface drains, and a temporary groundwater extraction system.

The following technologies are applicable to this alternative (Figure 3-1):

- Removal and treatment of standing water - Pits 5 and 6 and the Clearwell have standing water requiring treatment by a water treatment plant constructed for use during the Operable Unit 1 remediation or, if available, a site-wide water treatment

plant. The treatment plant process systems include clarification, filtration, carbon adsorption, ion exchange, and reverse osmosis. The treatment plant will also process all contaminated water generated by other aspects of this remedial alternative, including groundwater.

- Subsurface flow control - The subsurface flow control technologies will minimize the horizontal groundwater flow through the Operable Unit 1 area. These technologies are shown in Figure 3-1 and may consist of the following:

  - A soil or cement/bentonite partial slurry wall placed around the north, east, and south of the Operable Unit 1 area. The slurry wall will be installed through the surficial till layer into the underlying Great Miami Aquifer. The slurry wall will divert the flow from the perched water table around the enclosed area.

  - A series of perimeter vertical drains consisting of selected natural granular materials may be placed upgradient from the slurry wall. The vertical drains will facilitate the downward movement of the till groundwater, lowering the water table elevation a minimum of 15 feet below the bottom of the pits into the more permeable underlying Great Miami Aquifer. The perimeter drains are intended to intercept and divert uncontaminated perched groundwater and prevent it from coming in contact with the waste. The drains would be placed outside areas of contamination.

  - Temporary groundwater wells will lower the groundwater table inside the slurry wall area, providing both contaminant (plume) control and reduction of the water available to interact with the in situ waste. These wells will be removed and grouted shut before capping. It is assumed that the withdrawn water is contaminated to some degree and will require treatment before discharge.

- Capping - After completion of the contour grading, a multiple layer closure cap will be installed (Figure 3-2). The cap will be constructed, as described in Appendix A, utilizing a minimum four-foot-thick low permeability clay layer, a combination two-foot natural aggregate filter blanket/drainage layer, and a two-foot-thick vegetative layer design. However, the cap design will be modified to incorporate a biological intrusion barrier consisting of a five-foot-thick layer of roller-compacted concrete placed between the clay and drainage layers. The intrusion barrier will provide additional long-term waste isolation benefits including:

  - Protection against inadvertent human intrusion into the waste
  - Protection against general biological intrusion through the clay layer
  - Protection against severe wind and rain induced erosion, due to the loss of institutional control, by providing an armored surface over the clay layer

  All cap elements and layers will be contoured to grades that promote drainage while minimizing the effects of storm water erosion and any minor amounts of residual waste pit subsidence. For additional details, see Figure 2-3.

- Flow realignment - The objective of flow realignment is to permanently redirect flow away from a zone of contamination or to minimize destructive water erosion from damaging a critical natural or engineered feature. As presently configured, Paddys Run is the main drainage channel for the western portion of the site originating just north of the FMPC, flowing to within 150 feet of the west side of Operable Unit 1,

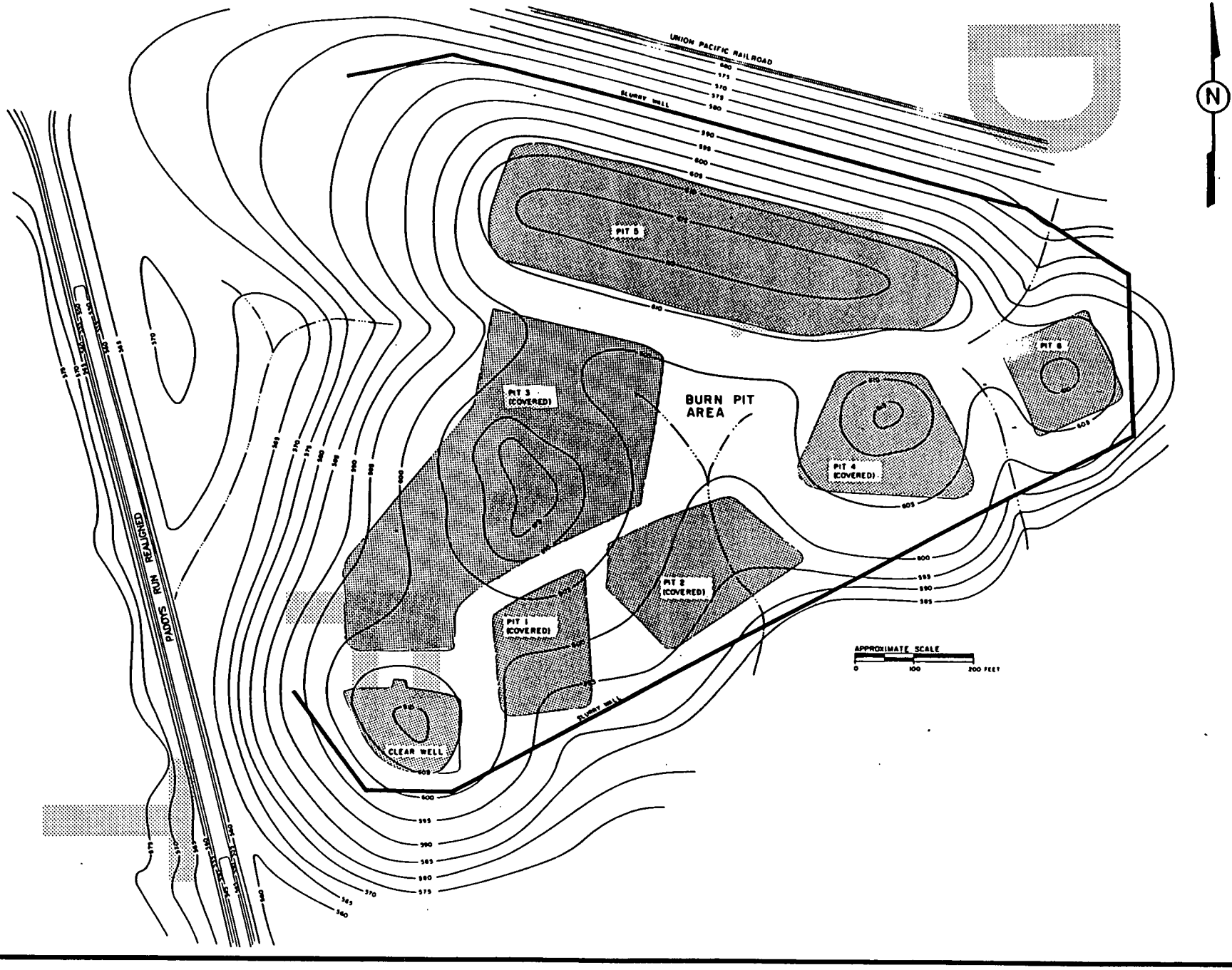

FIGURE 3–2. MULTI–LAYERED CAP PLAN VIEW

000100

6438

303317-A-3166, OU1-TK15, KHCX

and continuing south to the Great Miami River. Construction of the closure cap finished contour grades will require intruding on the present streambed location. Therefore, meeting the stated objectives on a long-term basis will require partial relocation and recontouring of Paddys Run.

- Runoff/run-on control - Runoff control features remove storm water from the operable unit area, and run-on control features direct storm water away from the closed facility. Runoff/run-on control can be accomplished by using site contour grading, vegetation, diversion and collection ditches, as well as various physical devices including silt traps and sedimentation basins.

3.1.2.2 System Requirements

This alternative will require:

- Earth moving, excavation, and compaction equipment
- Temporary groundwater extraction system
- Clay capable of achieving 10^{-7} centimeters per second vertical permeability
- Long-term maintenance and environmental monitoring program
- Partial relocation of Paddys Run
- Water treatment facility and water supply
- Decontamination facilities
- Short- and long-term runoff/run-on control

3.1.2.3 Size and Configuration

The following is a listing of the approximate sizes and numbers of the various components of the remediated pits.

• Closure cap	1,693,000 square feet
• Slurry wall (3-foot wide)	3,500 feet long x 60 feet deep = 210,000 square feet
• Subsurface drains	10 each, 3 feet diameter, 40 feet deep

3.1.2.4 Remediation Time Frame

Remediation will take approximately two years from the initial staging of construction equipment and water treatment to the final capping of pits and completion of Paddys Run realignment.

3.1.2.5 Spatial Requirements

The spatial requirements are as follows:

- Staging area for construction material and equipment - 5.0 acres
- Office and field laboratories - 0.5 acre
- Decontamination facilities - 0.5 acre
- Wastewater treatment system - 0.5 acre

3.1.2.6 Packaging/Transportation Requirements

The only transportation requirement identified is transporting the fill, aggregate, and clay closure components to the site.

3.1.2.7 Waste Generated

Minor amounts of contaminated miscellaneous equipment and job control waste will be generated and disposed of under the closure cap.

3.1.3 Alternative 2 - Nonremoval, Physical Stabilization, Slurry Wall, and Cap

3.1.3.1 Description

The second nonremoval alternative for Operable Unit 1 is identical to Alternative 1 with the exception that a waste stabilization step has been incorporated. The purpose of this additional process is to promote the densification of the waste in a controlled manner, which will minimize the potential for long-term waste settlement and the release of contaminated waste pit water into the underlying Great Miami Aquifer. The future maintenance of the cap due to waste consolidation (settling) will be correspondingly reduced as previously discussed in Section 2.4.3.

This nonremoval alternative isolates the wastes from the environment thus minimizing the generation and release of contaminated leachate to the underlying Great Miami Aquifer. This is accomplished by removing and treating any free standing water, in situ waste stabilization, construction of a closure cap, storm water runoff and run-on control measures, as well as subsurface flow control features including slurry walls, subsurface drains, and temporary groundwater wells. Placement of a closure cap will require the partial flow realignment of Paddys Run. The following technologies are presented in the order in which they appear in Figure 3-1.

- Removal and treatment of standing water - Pits 5 and 6 and the Clearwell have standing water requiring treatment by a water treatment plant constructed specifically for use during the Operable Unit 1 remediation or a site-wide water treatment plant if available. The treatment plant process systems include clarification, filtration, carbon adsorption, ion exchange, and reverse osmosis. The treatment plant will also process all contaminated water generated by other aspects of this remedial alternative, including groundwater.

- Subsurface flow control - The subsurface flow control technologies will minimize the horizontal groundwater flow through the Operable Unit 1 area. These technologies are shown in Figure 2-3 and may consist of the following:

- A soil/bentonite partial slurry wall placed around the north, east, and south of the Operable Unit 1 area. The slurry wall will be installed through the surficial till layer into the underlying Great Miami Aquifer. The slurry wall will divert the flow from the local water table around the enclosed area.

- A series of perimeter vertical drains consisting of selected natural granular materials may be placed upgradient from the slurry wall. The vertical drains will facilitate the downward movement of the till groundwater, lowering the water table elevation a minimum of 15 feet below the bottom of the pits into the more permeable underlying Great Miami Aquifer.

- Temporary groundwater wells will lower the groundwater table inside the slurry wall area, providing both contaminant (plume) control and reduction of the water available to interact with the in situ waste. These wells will be removed and grouted shut before capping. It is assumed that the withdrawn water is contaminated to some degree and will require treatment before discharge.

- Physical stabilization - CIS data indicate Pits 5 and 6 and the Clearwell exclusively contain sludges from plant production and/or surface soil sediments, whereas Pits 1 through 4 and the Burn Pit contain actual or assumed quantities of drums, construction rubble, and/or miscellaneous site debris. Pits 1 through 6 have a subsurface moisture content that varies from 20 to 60 percent. Therefore, specific in situ stabilization techniques were developed for various pits within the operable unit area to minimize the potential of long-term waste settlement, future cap maintenance, and release of contaminated waste pit water into the surrounding subsoils.

  - Shallow soil mixing

    Because of the absence of drums and construction rubble, SSM, as described in Section 2.4.3 and Appendix A, will be the preferred stabilization technology for Pits 5 and 6 and the Clearwell. SSM will reduce the amount of standing water requiring treatment, as well as stabilizing the waste and associated pore water into the grout matrix. The SSM technology will provide structural competence and an end product with little or no contaminant leachability potential.

  - Surcharging (overburdening)

    Pits 1 through 4 and the Burn Pit will each receive a 16- to 20-foot-thick soil overburden as shown in Figure 2-4. Before the surcharge placement, a series of leachate (pore water) collection trenches, sumps, and/or well points will be installed in the surface of Pits 1 through 4 and the Burn Pit. All collected leachate will be processed in the remedial water treatment plant.

    After the pit waste has achieved the required compaction goals, as indicated by laboratory tests and verified by field monitoring, the overburdening soil will be removed to design-specified contour elevations.

- Capping - After completion of the contour grading, a multiple layer closure cap will be installed. The cap will be constructed, as described in Appendix A, utilizing a minimum four-foot-thick low permeability clay layer, a combination two-foot natural aggregate filter blanket/drainage layer, and a two-foot thick vegetative layer design. However, the cap design will be modified to incorporate a biological intrusion barrier

consisting of a five-foot-thick layer of roller-compacted concrete placed between the clay and drainage layers. The intrusion barrier will provide additional long-term waste isolation benefits including:

- Protection against inadvertent human intrusion into the waste
- Protection against general biological intrusion through the clay layer
- Protection against severe wind and rain induced erosion, due to the loss of institutional control, by providing an armored surface over the clay layer

All cap elements and layers will be contoured to grades that promote drainage while minimizing the effects of storm water erosion and any minor amounts of residual waste pit subsidence. For additional details, see Figure 2-3.

- Flow realignment - The objective of flow realignment is to permanently redirect flow away from a zone of contamination or to minimize destructive water erosion from damaging a critical natural or engineered feature. As presently configured, Paddys Run is the main drainage channel for the western portion of the site originating just north of the FMPC, flowing to within 150 feet of the west side of Operable Unit 1, and continuing south to the Great Miami River. Construction of the closure cap finished contour grades will require intruding on the present streambed location. Therefore, to meet the stated objectives on a long-term basis will require partial relocation and recontouring of Paddys Run.

- Runoff/run-on control - Runoff control features remove storm water from the operable unit area while run-on control features direct storm water away from the closed facility. Runoff/run-on control can be accomplished by using site contour grading, vegetation, diversion and collection ditches, as well as various physical devices including silt traps and sedimentation basins.

3.1.3.2 System Requirements

This alternative will require:

- Earth moving, excavation, and compaction equipment
- Temporary groundwater extraction system
- Clay capable of achieving 10^{-7} centimeters per second vertical permeability
- Long-term maintenance and environmental monitoring program
- Partial relocation of Paddys Run
- Water treatment facility and water supply
- SSM system with air treatment
- Decontamination facilities
- Short- and long-term runoff/run-on control
- Soils for surcharging

3.1.3.3 Size and Configuration

The following is a list of the approximate sizes and numbers of the various components of the remediated pits.

• Closure cap	1,693,000 square feet
• Slurry wall	3,500 feet x 60 feet = 210,000 square feet
• Subsurface drains	10 each, 3 feet diameter, 40 feet deep
• In situ physical stabilization treatment areas	
- SSM	241,000 square feet (Pits 5 and 6 and Clearwell)
- Surcharge	488,000 square feet (Pits 1 through 4 and Burn Pit)

3.1.3.4 Remediation Time Frame

Remediation will take approximately two years from the initial staging of construction equipment and water treatment to the final capping of pits and completion of Paddys Run realignment.

3.1.3.5 Spatial Requirements

The spatial requirements are as follows:

- Staging area for construction material and equipment - 5.0 acres
- Office and field laboratories - 0.5 acre
- Decontamination facilities - 0.5 acre
- Wastewater treatment system - 0.5 acre

3.1.3.6 Packaging/Transportation Requirements

The only transportation requirement identified is transporting the fill, aggregate, and clay closure components to the site.

3.1.3.7 Waste Generated

Minor amounts of contaminated miscellaneous equipment and job control waste will be generated and disposed of under the closure cap.

3.1.4 Alternative 3 - Nonremoval, In Situ Vitrification, and Cap

3.1.4.1 Description

This alternative is similar to Alternative 2 in that a waste immobilization step has been incorporated into the nonremoval scenario. However, the solidification/stabilization step now specifies vitrification technology rather than the physical stabilization technologies called for under Alternative 2. A second important difference is that the subsurface control measures are not included in this alternative. The reason for this exclusion is that the resultant vitrified mass should preclude the future release of contaminated water from the waste thus eliminating the need for subsurface flow control. Capping will prevent rain water from coming in contact with the vitrified mass and

immediately surrounding partially vitrified soils, provide run-on and runoff control of surface water, and prevent direct human, animal, and plant contact with the mass.

The following technologies make up the components of this alternative (Figure 3-1).

- Removal and treatment of standing water - Pits 5 and 6 and the Clearwell have standing water requiring treatment by a water treatment plant constructed specifically for use during the Operable Unit 1 remediation or a site-wide water treatment plant if available. The treatment plant process systems include clarification, filtration, carbon adsorption, ion exchange, and reverse osmosis. The treatment plant will also process all contaminated water generated by other aspects of this remedial alternative, including groundwater.

- In situ vitrification - Vitrification of the waste pits would be accomplished by placing an array of electrodes at predetermined grid points across the pits. Electrical energy would then be applied until a temperature above 1600°C is achieved and the soil is converted to a molten mass. The process would be repeated at adjacent soil blocks until the entire site was treated.

  An off-gas treatment system would be used to collect and treat gases generated by the vitrification process. The off-gases would be collected by a hood and drawn into the treatment system, which would contain the following unit processes: (1) quenching, (2) pH controlled scrubbing, (3) dewatering (mist elimination), (4) heating (for dewpoint control), (5) particulate filtration, and (6) activated carbon adsorption.

  Upon cooling, an obsidian-like vitrified monolith results (silicate glass and microcrystalline structure), which possesses excellent structural and environmental properties. The silicate glass is very durable relative to environmental exposure and will hold a wide variety of materials in nonleachable form.

- Capping - After completion of the contour grading, a multiple layer closure cap will be installed. The cap will be constructed, as described in Appendix A, utilizing a minimum four-foot-thick low permeability clay layer, a combination two-foot natural aggregate filter blanket/drainage layer, and a two-foot-thick vegetative layer design. However, the cap design will be modified to incorporate a biological intrusion barrier consisting of a five-foot-thick layer of roller-compacted concrete placed between the clay and drainage layers. The intrusion barrier will provide additional long-term waste isolation benefits including:

  - Protection against inadvertent human intrusion into the waste
  - Protection against general biological intrusion through the clay layer
  - Protection against severe wind and rain induced erosion, due to the loss of institutional control, by providing an armored surface over the clay layer.

  All cap elements and layers will be contoured to grades that promote drainage while minimizing the effects of storm water erosion and any minor amounts of residual waste pit subsidence. For additional details, see Figure 2-3.

- Flow realignment - The objective of flow realignment is to permanently redirect flow away from a zone of contamination or to minimize destructive water erosion from

damaging a critical natural or engineered feature. As presently configured, Paddys Run is the main drainage channel for the western portion of the site originating just north of the FMPC, flowing to within 150 feet of the west side of Operable Unit 1, and continuing south to the Great Miami River. Construction of the closure cap finished contour grades will require intruding on the present streambed location. Therefore, to meet the stated objectives on a long-term basis will require partial relocation and recontouring of Paddys Run.

- Runoff/run-on control - Runoff control features remove storm water from the operable unit area while run-on control features direct storm water away from the closed facility. Runoff/run-on control can be accomplished by using site contour grading, vegetation, diversion and collection ditches, as well as various physical devices including silt traps and sedimentation basins.

3.1.4.2 System Requirements

This alternative will require:

- Earth moving, excavation, and compaction equipment
- Clay capable of achieving 10^{-7} centimeters per second vertical permeability
- Long-term maintenance and environmental monitoring program
- Partial relocation of Paddys Run
- Water treatment facility and water supply
- In situ vitrification and off-gas treatment system
- Decontamination facilities
- Short- and long-term runoff/run-on control

3.1.4.3 Size and Configuration

The following is a listing of the approximate sizes and numbers of the various components of the remediated pits.

- Closure cap - 44 acres
- In situ vitrification treatment area - 16 acres (Pits 1 through 6, Clearwell and Burn Pit)

3.1.4.4 Remediation Time Frame

Remediation will take approximately two years from the initial staging of construction equipment and water treatment to the final capping of pits and completion of Paddys Run realignment.

3.1.4.5 Spatial Requirements

The spatial requirements are as follows:

- Staging area for construction material and equipment - 5.0 acres
- Office and field laboratories - 0.5 acre

- Decontamination facilities - 0.5 acre
- Wastewater treatment system - 0.5 acre

3.1.4.6 Packaging/Transportation Requirements

The only transportation requirement identified is transporting the fill, aggregate, and clay closure components to the site.

3.1.4.7 Waste Generated

Minor amounts of contaminated miscellaneous equipment and job control waste will be generated and disposed of under the closure cap.

3.1.5 Alternative 4 - Removal, Waste Treatment, and On-Property Disposal

3.1.5.1 Description

This alternative is intended to completely remove the pit waste and dispose of it in an engineered on-property disposal facility. This process includes the removal and treatment of standing water, waste removal, waste segregation, treatment, and final disposal (see Figure 3-1).

There are two waste removal technology options. Depending on the physical nature of the pit sludges, including water content and the presence of standing surface water, hydraulic dredging and/or mechanical dredging technologies can be employed.

Pits 1 through 4 and the Burn Pit contain actual or assumed quantities of drums, construction rubble, and/or miscellaneous site debris. Therefore, as described in Appendix A, extensive waste segregation activities will require mechanical shredders, crushers, compactors, and balers, as well as a separate facility for drum handling, sampling, and treatment as required.

After segregation, the remaining sludge material will be treated before disposal. Depending on the amount of organics present in the pit sludges, the process options selected for further consideration include drying and/or vitrification and dewatering and stabilization. These process options are described in Appendix A.

Any water not utilized by the waste (sludge) treatment technologies will be processed by the water treatment plant constructed specifically for use during Operable Unit 1 remediation or a site-wide

water treatment plant if available. The technologies under review for the water treatment plant include:

- Clarification
- Filtration
- Ion exchange
- Reverse osmosis

If future sampling or treatability studies determine that the organic contaminants are of a type or concentration that could have a detrimental effect on the stabilization process, the process would have to include a step to remove or destroy these organics. After treatment, the resultant waste form will be transferred from a temporary holding area to either a tumulus or series of above-grade structures, as described in Appendix A. Although both the tumulus and above-grade structure provide containment, the engineered disposal facility will be retained as the representative process option. The reinforced concrete roof of the above-grade structure will function as the cap intrusion barrier component.

As with all on-property disposal technologies including in situ stabilization, a properly designed site, regularly scheduled monitoring, and facility maintenance programs will be required throughout some specified postclosure period.

3.1.5.2 System Requirements

This alternative will require:

- Long-term maintenance and environmental monitoring program
- Waste removal equipment
- Water treatment facility and water supply
- On-property storage facility
- Miscellaneous service utilities
- Process plant facility
- Decontamination facility
- Earth moving, excavation, and compaction equipment
- Waste segregation facility
- Short- and long-term runoff/run-on control
- Drum handling facility (provided by the FMPC in conjunction with general plant activities)

It is assumed that the plant has no existing excess capacity for sludge or wastewater treatment.

3.1.5.3 Size and Configuration

- Vitrification - 1300 cubic yards of vitrified waste per day, 100,000-square-foot treatment facility
- Cement stabilization - 2200 cubic yards of stabilized waste per day, one-acre treatment facility

3.1.5.4 Remediation Time Frame

Remediation will take approximately six years from the initial staging of equipment to final backfilling of the pits if either vitrification or physical stabilization is used (based on one year construction/startup, four years of excavation and treatment, and one year for final closure).

3.1.5.5 Spatial Requirements

The spatial requirements are as follows:

- Offices and field laboratory - 0.5 acre
- Decontamination facilities - 0.5 acre
- On-property treatment, packaging, and process facility - 1.0 acre
- Staging area for supplies and earth moving equipment - 5.0 acres
- Engineered disposal facility or equivalent - 150 acres
- Treated waste transfer station - 2.0 acres
- Wastewater treatment plant - 0.5 acre

3.1.5.6 Packaging/Transportation Requirements

There will be an on-property treatment/packaging facility to prepare the waste for on-property storage, and there will be on-property transportation requirements to move the treated waste to on-property storage.

3.1.5.7 Waste Generated

Any equipment that is too contaminated to warrant decontamination will be considered waste and will be sent to an appropriate disposal facility. Wastewater from remedial activities will be treated before release.

3.1.6 Alternative 5 - Removal, Waste Treatment, and Off-Site Disposal

3.1.6.1 Description

This alternative is the same as Alternative 4 in all ways except the final disposal of the treated waste is at an approved off-site disposal facility.

The waste removal technologies, sorting technologies, and on-property treatment and packaging technology options are the same as those for Alternative 4.

Any water not used for the stabilization process will be processed by the wastewater treatment plant constructed specifically for use during Operable Unit 1 remediation or a site-wide water treatment plant if available. The technologies under review for the wastewater treatment plant include:

- Clarification
- Filtration
- Ion exchange
- Reverse osmosis

3.1.6.2 System Requirements

This alternative will require:

- Waste removal equipment
- Wastewater treatment facility and a water supply
- On-site temporary waste storage and loading facilities
- Earth moving, excavation, and compaction equipment
- Decontamination facility
- Miscellaneous service utilities
- Construction of a rail spur to the assumed approved off-site waste disposal facility
- Process plant facility
- Waste segregation facility
- Short- and long-term erosion control features
- Drum handling facility (provided by FMPC is conjunction with general plant activities)

It is assumed that the plant has no excess capacity for sludge or wastewater treatment.

3.1.6.3 Size and Configuration

- Vitrification - 1300 cubic yards per day, 100,000-square-foot production facility
- Cement stabilization - 2200 cubic yards per day, one-acre production facility

3.1.6.4 Remediation Time Frame

Remediation will take approximately six years from the initial staging of equipment to final back-filling of pits if either vitrification or physical stabilization is used (based on one year construction/startup, four years of excavation and treatment, and one year for final closure).

3.1.6.5 Spatial Requirements

The spatial requirements are as follows:

- Offices and field laboratory - 0.5 acre
- Decontamination facilities - 0.5 acre
- On-site treatment and packaging facility - 1.0 acre
- On-site short-term storage area - 5.0 acres
- Staging area for supplies and earth moving equipment - 5.0 acres
- Treated waste transfer station - 2.0 acres

3.1.6.6 Packaging/Transportation Requirements

See Appendix B.

3.1.6.7 Waste Generated

Any equipment that cannot be decontaminated will be considered waste.

3.2 INITIAL SCREENING OF ALTERNATIVES

3.2.1 Screening Criteria

3.2.1.1 Alternative Evaluation Process

The refined alternatives are evaluated against three broad criteria: effectiveness (short and long term), implementability, and cost. Because this evaluation should reduce the number of alternatives that will undergo a more thorough and extensive analysis, alternatives are evaluated more generally in this phase than they will be during the subsequent detailed analysis task. Per the methodology of OSWER Directive 9355.3-01 (CERCLA Guidance Document), at least one "No-Action," "In Situ," and "Remove/Treat" alternative will be carried forward to the Detailed Analysis of Alternatives Phase. The no-action alternative is retained as a baseline against which the other alternatives are compared. The detailed analysis will subject the remaining alternatives to nine specific criteria and their individual factors rather than the three general criteria used in the alternative screening process. The relationship between the screening criteria and the nine detailed analysis evaluation criteria is illustrated in Figure 3-3. During the initial screening of alternatives, only the three broad criteria ("effectiveness," "implementability," and "cost") are used for evaluation. However, per CERCLA guidance, preliminary consideration is given to the two threshold ("overall protection of human health" and "compliance with ARARs") and five primary balancing factors ("long-term effectiveness and permanence," "reductions in toxicity, mobility, and volume through treatment," "short-term effectiveness on health and environment," "implementability," and "cost").

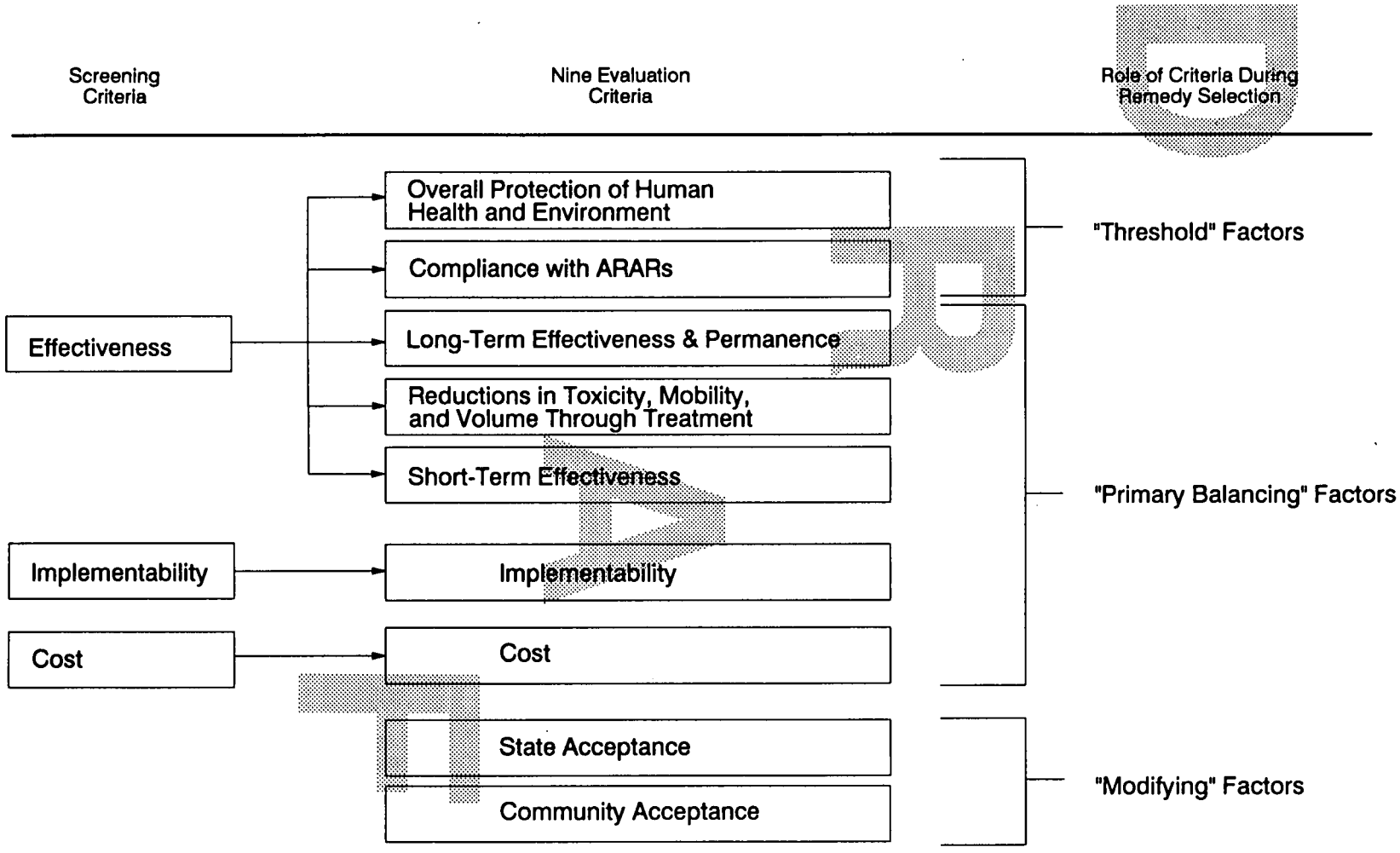

FIGURE 3-3. RELATIONSHIP OF SCREENING CRITERIA TO THE NINE EVALUATION CRITERIA

FL/FMPC-0115-2/12-10.31

112 1/2

6438

Per the CERCLA Guidance Document, only similar alternatives are compared in the evaluation and screening process. The in situ Alternatives 1, 2, and 3 will be compared as a general class of action and the waste removal Alternatives 4 and 5 will be compared as another general class. The rating scale used for this evaluation process assigned each alternative a score from 1 to 5, with 5 rated as highly favorable and 1 rated as unfavorable.

3.2.1.2 Effectiveness Evaluation

A key aspect of the screening evaluation is the effectiveness of an alternative in protecting human health and the environment. In addition to determining the effectiveness of the alternative in meeting the RAOs, each alternative will be evaluated for its effectiveness in achieving reductions in toxicity, mobility, and volume. The short- and long-term effectiveness were evaluated with the short term referring to the active remediation (construction) period and the long term referring to the postremediation period.

3.2.1.3 Implementability and Reliability Evaluation

Implementability is a measure of both the technical and administrative feasibility of constructing, operating, and maintaining a remedial action alternative. It provides a means of evaluating the ability of an alternative to be adapted to site-specific conditions.

The technical feasibility evaluation considered the following:

- Construction
- Operation
- Regulatory requirements
- Maintenance
- Monitoring
- Material/equipment replacement
- Ongoing treatment and/or monitoring
- Discharge/emission/disposal

The technical reliability of each alternative was also evaluated to determine the likelihood that technical problems associated with implementation could lead to schedule delays.

The administrative feasibility evaluation considered the following:

- Permitting and licensing approval
- Availability of on-property/off-site treatment, storage, and disposal services
- Availability of equipment
- Availability of design, operating, and support personnel

3.2.1.4 Cost Evaluation

Cost evaluations were prepared for each alternative to allow a relative comparison between similar alternatives. This analysis identifies alternatives that cost substantially more than a similar alternative.

The cost evaluation was based on a variety of cost-estimating data such as cost curves, generic unit costs, vendor information, conventional cost-estimating guides, commercial remedial costs, and previous similar estimates as modified by site-specific information.

3.2.1.5 Innovative Technologies

Technologies are classified as innovative if they are fully developed but lack sufficient cost or performance data for routine use at Superfund sites. These technologies were carried through the screening phase if there was reason to believe that they offered significant advantages in performance or implementability. The nature of innovative technologies is such that a relatively complete performance and cost evaluation is not possible at this time because of insufficient data.

3.2.1.6 Compliance With Applicable or Relevant and Appropriate Requirements

CERCLA provides virtually no guidance as to the specific cleanup standards that should be applied to a remedial action or to the criteria for choosing among remedial alternatives. Instead, selection criteria and cleanup standards are addressed in the implementing regulations for CERCLA and SARA, 40CFR300, which is referred to as the National Oil and Hazardous Substances Pollution Contingency Plan (NCP 1990). Selection criteria for choosing among remedial actions are presented in Subpart E - Hazardous Substance Response [40CFR300.430 (e)(9)]. In 40CFR300.430 (e)(2)(i)(A)(2) it is established that for known or suspected carcinogens, acceptable exposure levels are generally levels that represent an excess upper bound lifetime cancer risk of between 10^{-4} and 10^{-6}. The NCP further defines the criteria for remediating a facility by requiring that remedial actions must attain or exceed the ARARs in federal and state environmental and public health laws.

Following is an analysis of the proposed ARARs to be used in evaluating the performance of technologies and protectiveness features applied to the remediation of Operable Unit 1. These proposed ARARs have been previously presented to the EPA and have been the subject of several meetings.

Background

Section 121(d) of CERCLA requires that at the completion of remedial actions, the site should achieve a level of control that complies with federal and state environmental laws that are applicable or relevant and appropriate to the hazardous substances, pollutants, or contaminants at the site.

"Applicable" requirements are those "cleanup standards, standards of control, and other substantive requirements, criteria, or limitations promulgated under federal environmental or state environmental or facility siting laws that specifically address a hazardous substance, pollutant, contaminant, remedial action, location, or other circumstance found at a CERCLA site. Only those state standards identified in a timely manner and that are more stringent than federal requirements may be applicable" (40CFR300.5). "Applicable" implies that the remedial action or the circumstances at the site satisfied all of the jurisdictional prerequisites of a requirement.

If a requirement is not applicable to a specific release, it may instead be relevant and appropriate. Relevant and appropriate requirements are those "cleanup standards, standards of control, and other substantive environmental protection requirements, criteria, or limitations promulgated under federal or state law that, while not "applicable" to a hazardous substance, pollutant, contaminant, remedial action, location, or other circumstance at a CERCLA site, address problems or situations sufficiently similar to those encountered at the CERCLA site that their use is well suited to the particular site" (40CFR300.5). However, in some circumstances, a requirement may be relevant but not appropriate for the site-specific situation.

Section 121 of CERCLA requires selection of a remedial action that is protective of human health and the environment. Such protectiveness, as determined by a site risk assessment, may not always be attained by the ARARs available in federal and state laws. In these cases, nonpromulgated advisories, criteria, or guidance that were developed by EPA, other federal agencies, or states are to be considered (TBC) in establishing RAOs that are protective of human health and the environment.

ARAR Identification Methodology

The process for identifying ARARs and TBC material for Operable Unit 1 is outlined in Figure 3-4 and is described below.

The first step in identifying the ARARs for the site involved identifying the potential contaminant-, action-, and location-specific requirements. The next step involved analyzing those requirements to determine if they were applicable. Figure 3-5 outlines the general procedure used for determining

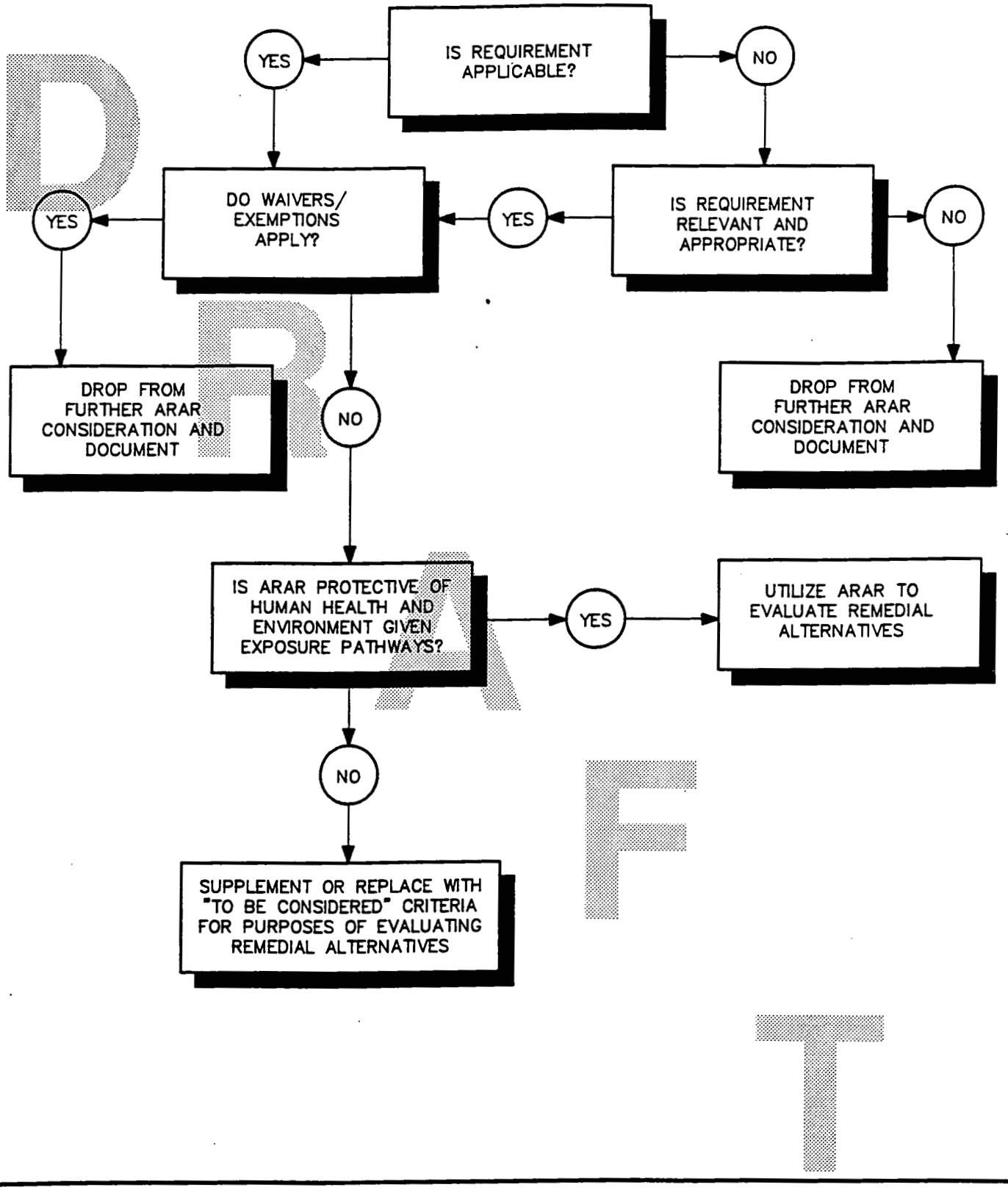

303317-A-G187/OU1-TK15/KNOX

FIGURE 3-4. GENERAL PROCEDURE FOR IDENTIFICATION OF ARARs

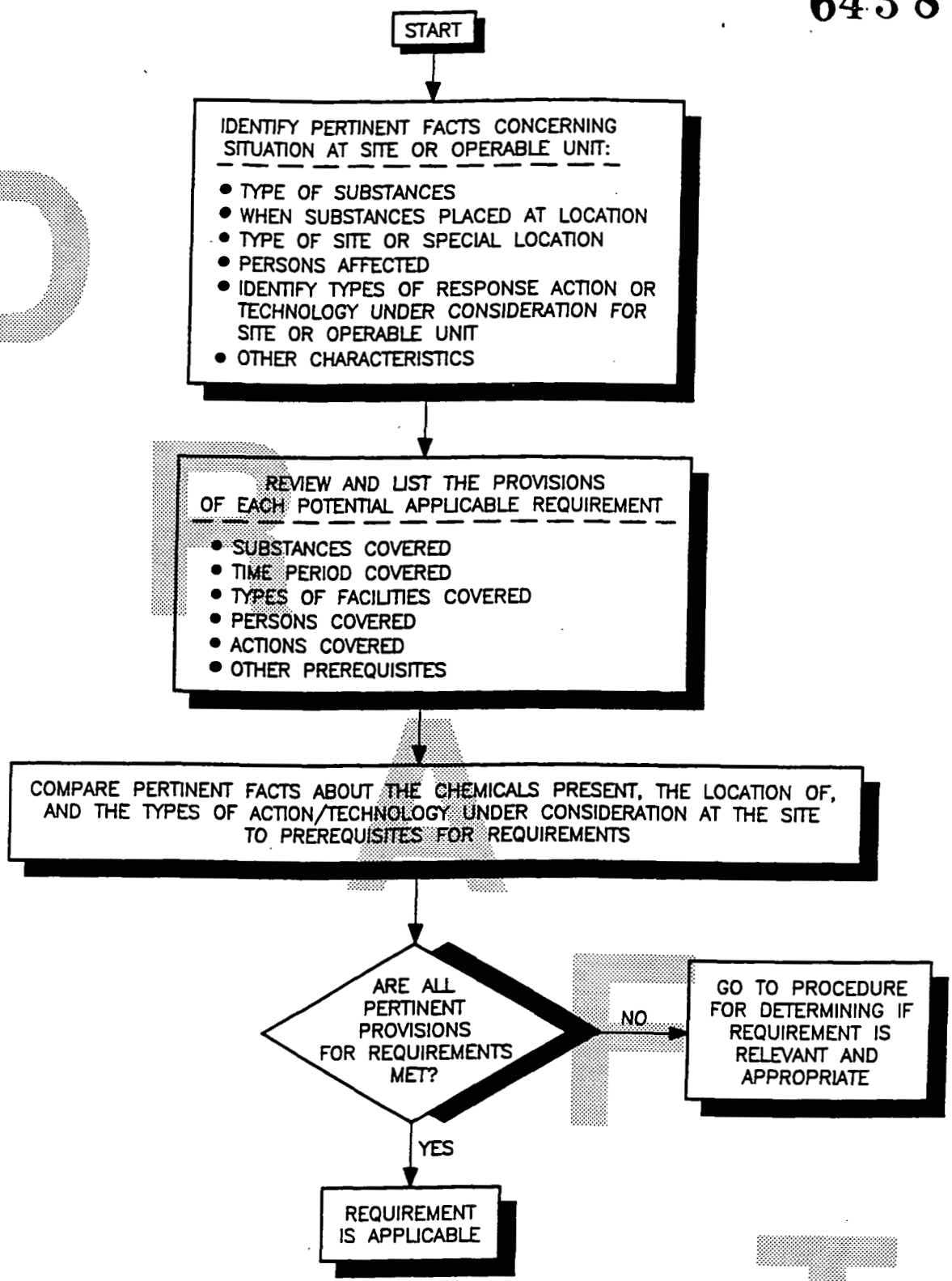

303317-A-G168/OU1-TK15/KNOX

FIGURE 3-5. GENERAL PROCEDURE FOR DETERMINING IF REQUIREMENT IS APPLICABLE

if a requirement is applicable. For a requirement to be applicable, the site circumstances must meet all of the jurisdictional prerequisites of the requirement. Such jurisdictional prerequisites may include:

- Who, as specified by the statute or regulation, is subject to its authority
- The types of substances or activities listed as falling under the authority of the statute or regulation
- The time period for which the statute or regulation is in effect
- The types of activities the statute or regulation requires, limits, or prohibits

If the requirement failed to meet any jurisdictional prerequisite, the requirement is not applicable. The analysis then addressed whether the requirement is relevant and appropriate. This process is outlined in Figure 3-6. The evaluation factors used for determining whether a requirement is relevant or appropriate included:

- Whether the specific objectives of the statute and regulations under which the requirement was created are similar to the specific objectives of the CERCLA action
- Whether the media regulated or affected by the requirement are similar to the media contaminated or affected at the CERCLA site
- Whether the substances regulated by the requirement are similar to the substances found at the CERCLA site
- Whether the entities or interests affected or protected are similar to the entities or interests affected by the CERCLA site
- Whether the actions or activities regulated by the requirement are similar to the remedial action contemplated at the CERCLA site
- Whether the type of place regulated is similar to the type of place affected by the CERCLA site or CERCLA action
- Whether the type of structure or facility regulated is similar to the type of structure or facility affected by the release or contemplated by the CERCLA action
- Whether any consideration of use or potential use of affected resources in the requirement is similar to the use or potential use of the affected resource
- Whether the purpose of the requirement in the program of its origin is served by its application at the CERCLA site
- Whether any variances, waivers, or exemptions from the requirement are available for the circumstances of the CERCLA site or CERCLA action

If a regulatory scheme appeared to be relevant and appropriate, each provision in that scheme was reviewed to determine its relevance and appropriateness for the site. If an evaluation of a provision against these factors indicates that the site circumstances are "sufficiently similar" to the problems

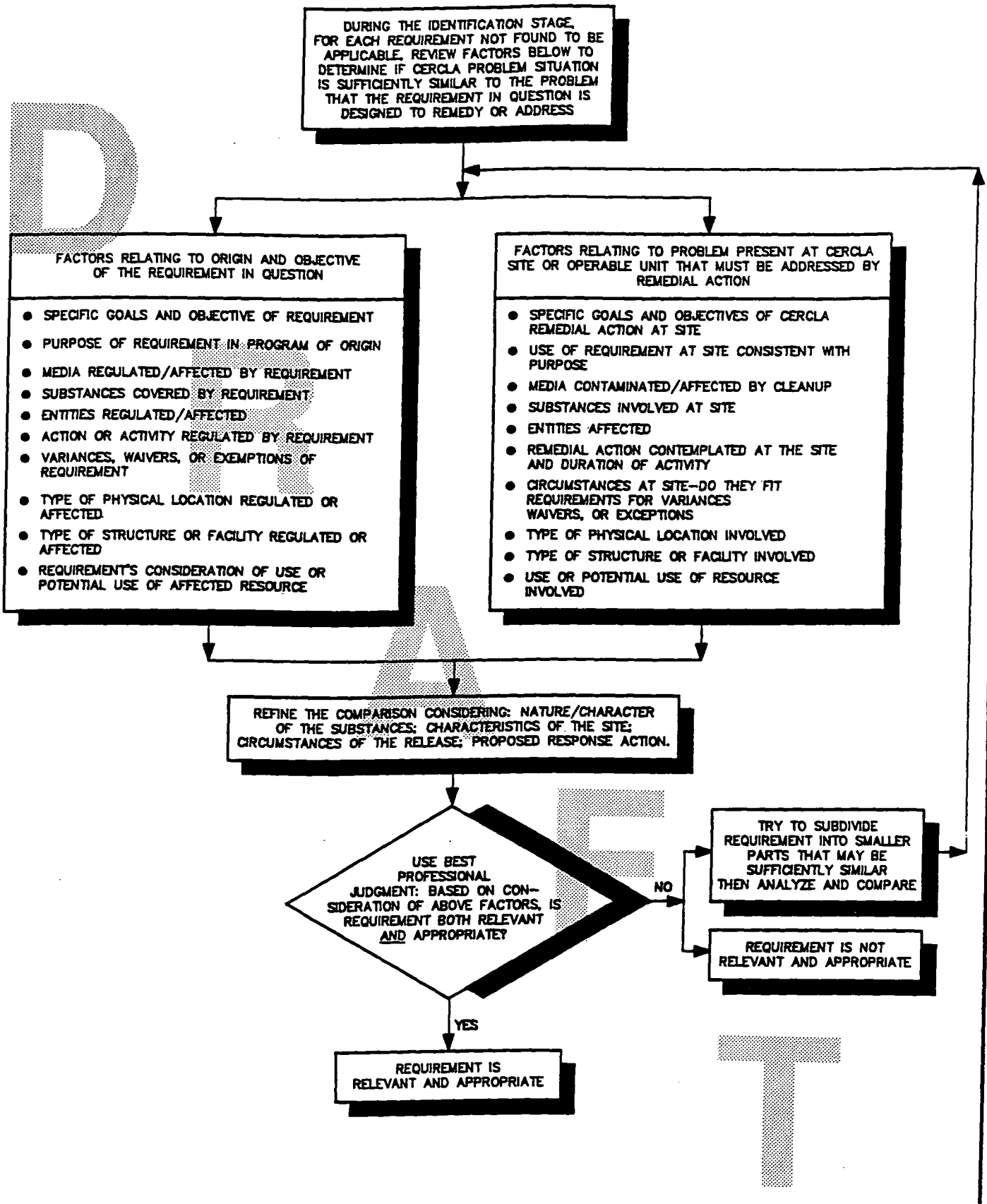

303317-A-G169/OU1-TK15/KNOX

FIGURE 3-6. GENERAL PROCEDURE FOR DETERMINING IF REQUIREMENT IS RELEVANT AND APPROPRIATE

addressed by the provision, then the provision was selected as relevant and appropriate for evaluating remedial alternatives. Otherwise, it was dropped from consideration. When the analysis resulted in a determination that a requirement is both relevant and appropriate, such a requirement must be complied with to the same degree as if it were applicable.

If an ARAR does not exist or if it is insufficient to protect human health and the environment, then criteria, guidance, proposed rules, or advisories developed or approved by federal or state agencies were analyzed for their pertinence in establishing a protective remedy. These materials, which are not legally binding, are classified as TBC materials.

A complete list of potential ARARs and other materials that were initially screened for the operable unit are presented in Appendix D. The requirement(s) of the ARARs or TBC material is presented, as well as the rationale for implementation and the affected alternatives of this operable unit. The dash marks on Table D-2 indicate that the particular alternative was evaluated and found not to be affected by the ARAR.

If a requirement is determined to be an ARAR, it must be complied with unless it meets the CERCLA criteria for a waiver. Under Section 121(d)(4) of CERCLA, EPA may waive compliance with an ARAR if one of the following conditions can be demonstrated:

- The remedial action selected is only an interim measure and will become part of a total remedial action that will attain the ARAR level or standard of control when completed.
- Compliance with the requirement will result in greater risk to human health and the environment than other alternatives.
- Compliance with the requirement is technically impractical from an engineering perspective.
- The remedial action selected will attain a standard of performance that is equivalent to that required by the ARAR through the use of another method or approach.
- The state has not consistently applied (or demonstrated an intention to apply consistently) the promulgated requirement in similar circumstances at other remedial actions.
- Attainment of the ARAR would not provide a balance between the need for protection of public health or welfare and the environment at this site and the availability of Fund monies to respond to other sites that may present a threat to the public health or the environment (for Fund-financed cleanups only).

3.2.2 Alternative 0 - No Action

3.2.2.1 Effectiveness

Protection of Human Health

The short- and long-term level of human health protection provided by this alternative is extremely low. Without some sort of remedial action, continued contaminant migration is certain to occur. Therefore, this alternative rates a 1 in both categories.

Protection of Environment

The short- and long-term effectiveness in this category rate the same as for the protection of human health.

Reduction in Toxicity, Mobility, and Volume

This alternative rates a 1 in this category, because there is no reduction in toxicity, mobility, or volume.

3.2.2.2 Implementability

Constructibility

This alternative rates a 5 in this category because of the minor amount of construction required.

Reliability

This alternative rates a 1 in this category because existing conditions cannot be relied on to prevent future releases from the unit.

Maintenance/Operation

Perpetual maintenance and monitoring will be required to ensure the unremediated site surface soils and pit berms remain functional. It is expected that maintenance will be extensive because of general and stream erosion on the west perimeter of the Operable Unit 1 area caused by precipitation at Paddys Run; therefore, this alternative rates a 1.

Special Engineering Equipment

This alternative requires no special engineering, equipment, or technical expertise; therefore it is rated a 5 in this category.

3.2.2.3 Cost

Excluding any future potential remediation costs, the cost for this alternative is lower than any of the specified remedial actions. The cost associated with long-term monitoring was estimated to be $9 million.

3.2.2.4 Screening Summary

This alternative provides neither short- nor long-term protection for human health and the environment nor a reduction in contaminant toxicity, mobility, and volume. This, coupled with the unlikelihood of agency approval for a no-action alternative, provides an overall alternative ranking of 17.

3.2.3 Alternative 1 - Nonremoval, Slurry Wall, and Cap

3.2.3.1 Effectiveness

Protection of Human Health

This alternative was given ratings of 3 for short-term and 2 for long-term protection of human health. Although this is a nonremoval action and requires minimal handling risks, the benefits of not handling the material were offset by the risks associated with constructing a cap over moist unstabilized waste. There are also long-term risks associated with potential discharges to groundwater. As the waste consolidates under the cap loads, pore water will be squeezed out of the waste/soil matrix into the surrounding pits, soils, and ultimately into the groundwater table. Waste consolidation may be experienced for years after the completion of cap construction. This may lead to the long-term introduction of contaminated pore water in the till groundwater and potentially the Great Miami Aquifer.

Protection of Environment

The short- and long-term effectiveness of this alternative to protect the environment rates a below average score of 2. The rationale for this rating is similar to that for human health. Although the cap and slurry wall offer improvement over existing conditions, the concern over leaving unstabilized waste containing high moisture content offsets these benefits. There is also a high probability for cap subsidence and failure as the unstabilized waste consolidates.

Reduction in Toxicity, Mobility, and Volume

Alternative 1 was given a rating of 2 for its ability to reduce the toxicity, mobility, and volume of waste. The construction of a slurry wall and cap over unstabilized and untreated waste will reduce the mobility of contaminants but will do nothing to decrease the toxicity or volume of the waste.

3.2.3.2 Implementability

Constructibility

This alternative was rated average (3) for constructibility. The equipment and technology required for installation of the cap and slurry wall are available and proven. There may be some difficulty in constructing the cap over unstabilized waste but they are primarily long-term performance problems.

Reliability

Alternative 1 was given a below average (2) rating for reliability. As previously discussed, there are concerns about the structural integrity of the cap if placed over unconsolidated waste.

Although the Clearwell and Pits 5 and 6 will require removal and treatment of the standing waters, the CIS data indicate that most pit waste is extremely wet and compressible. As the closure cap is placed, the induced load will initiate waste compression (consolidation). Dependent on factors such as total cap weight, time to construct, water content of the waste, and porosity of the surrounding pit soils, the cap may experience considerable settlement for years after completion. This extended settlement period will require considerable cap maintenance and possible reconstruction efforts.

Maintenance/Operation

Implementation of this alternative will require long-term postclosure monitoring and maintenance. The long-term maintenance will include mowing and care of the vegetative cover of the cap to prevent erosion and the natural vegetative succession to species whose roots could intrude into the cap. Monitoring will include groundwater and radon sampling. The cost of this postclosure monitoring and maintenance is included in the cost estimate for the alternative.

This alternative was given a below average rating on maintenance due to the reliability problems previously discussed in this section. If cap subsidence and failure occur due to waste consolidation, the maintenance, and operation costs will increase significantly.

Special Engineering Equipment

This alternative was rated average (3) for the types of equipment required during construction.

3.2.3.3 Cost

The cost of this alternative was rated low because it is a nonremoval alternative and no waste stabilization processes are being implemented. Total costs were estimated to be $205 million of which $139 million are capital costs and $66 million are O&M costs.

3.2.3.4 Screening Summary

As shown in Table 3-1 (at the end of Section 3.0), this alternative was given a total score of 21 and a low cost. The primary factors in this alternative receiving a low score were the concerns over not stabilizing the waste in the pits. Subsidence of the waste and the resultant cap failure and release of leachate to the groundwater affected almost all of the rating criteria.

3.2.4 Alternative 2 - Nonremoval, Physical Stabilization, Slurry Wall, and Cap

3.2.4.1 Effectiveness

Protection of Human Health

This alternative offers the best short-term effectiveness of all the alternatives and rates a 4 because it is a waste nonremoval alternative; therefore, there are minimal waste handling risks.

With dedicated maintenance and monitoring, the long-term effectiveness can be maintained. However, this alternative rates a 3 in this category because it is uncertain to what extent the containment techniques used will prevent contaminant migration over the long term.

Protection of Environment

The short- and long-term effectiveness in this category is average (3) because the positive environmental impact of reducing emissions from the waste pits is outweighed by the realignment of Paddys Run.

Reduction in Toxicity, Mobility, and Volume

This alternative rates a 3 in this category because, even though the pit waste has been reduced in volume and is relatively immobile because of compaction and the impermeable cap, the waste has not been treated except for SSM in Pits 5 and 6 and the Clearwell.

3.2.4.2 Implementability

Constructibility

This alternative rates a 4 in this category because the technology is available, proven, and easiest to implement.

Reliability

This alternative rates a 4 in this category because of its relatively simple application and low probability of scheduling and operational delays.

Maintenance/Operation

Following the implementation of the remedial action, perpetual maintenance and monitoring will be required to ensure that the RAOs continue to be met. The long-term maintenance will include mowing and care of the vegetative cover of the cap to prevent erosion and the natural vegetative succession to species whose roots could intrude into the cap. Monitoring will include groundwater and radon sampling. The cost of this postclosure monitoring and maintenance is included in the cost estimate for the alternative. This alternative rates a 3 in this category.

Special Engineering Equipment

This alternative requires no special engineering, equipment, or technical expertise (except for SSM); therefore, it rates a 4 in this category.

3.2.4.3 Cost

The cost of the nonremoval, physical stabilization, slurry wall, and capping alternative is low. Total costs are approximately $1.24 billion of which $1.22 billion is capital and $20 million is O&M cost.

3.2.4.4 Screening Summary

The advantages of this alternative are the relatively simple and inexpensive implementation and the effective short-term protection of human health and the environment. The SSM technology will solidify/stabilize the waste in Pits 5 and 6 and the Clearwell. This alternative meets the RAOs of preventing ingestion or contact with the waste, preventing the release of airborne contamination and radon gas from the waste, and mitigating migration to surface or groundwater.

The disadvantage of this alternative is that surcharging does not reduce the waste toxicity of any pits to which it can be applied. Because this is a containment and compaction technology, it ranks

below other technologies as a remedial treatment that permanently and significantly reduces the volume or toxicity of hazardous substances, pollutants, and contaminants. However, capping does significantly reduce the mobility of these contaminants by effectively minimizing the infiltration of rain water through the pit waste. The requirement for future remediation is a possibility. This alternative receives an overall ranking of 31.

3.2.5 Alternative 3 - Nonremoval, In Situ Vitrification, and Cap

3.2.5.1 Effectiveness

Protection of Human Health

Alternative 3 was rated as average (3) for its short-term and long-term effectiveness in protecting human health. Theoretically, vitrification should rate much higher for its protection of human health. However, there are concerns about the vitrification process being able to reach the 30- to 40-foot depths required for complete vitrification of Pits 3 through 6.

Protection of the Environment

This alternative was rated as average (3) for its short-term and long-term ability to protect the environment. In situ vitrification is still considered an unproven state of the art technology when applied at the depths required for Pits 3 through 6. The possibility of having unvitrified material in the pit bottoms was the reason for the lower rating.

Reduction in Toxicity, Mobility, and Volume

Theoretically, if complete vitrification of waste occurs, there will be a significant decrease in toxicity, mobility, and volume. This alternative was therefore rated above average (4) based strictly on its theoretical ability to work. If the vitrification process did not reach the full depth of the waste in the pits, the potential for contamination of the groundwater would remain.

3.2.5.2 Implementability

Constructibility

Assuming the in situ vitrification process was technologically implementable, construction and verification of the completeness of melt could easily present significant problems caused by the following:

- Pits containing scrap metal, drums, or rebar could prevent proper installation of electrodes and cause problems such as electrical shorts.

- Electromechanical system breakdowns may provide only a partial melt. If this occurs, vitrification may have to be reinitiated in a cooled, semivitrified material. This would require reestablishing a new electrical conductance path (joule heat trench) into a partially or fully vitrified material. The process repairs may include drilling and/or air-hammer in a contaminated area, thus greatly increasing the exposure risks to workers.

- Final QA/QC verification for completeness of melt may require extensive and costly drilling into the solidified melt matrix.

- The vitrification process requires a large and efficiently vented off-gas collection system. In the event of vent system failure, the superheated gases would be released to the environment and workers would be exposed to various radiochemical and chemical contaminants.

For these reasons, Alternative 3 was rated below average (2) for constructibility.

Reliability

Reliability for this alternative was rated below average (2) for the same reasons discussed under constructibility.

Maintenance/Operation

Maintenance/operation for this alternative was rated below average (2) for the same reasons discussed under constructibility.

Special Engineering Equipment

Alternative 3 was rated below average (2) for special engineering equipment requirements. Vitrification is still considered an innovative technology and requires specialized equipment.

3.2.5.3 Cost

Vitrification was rated average (3) for cost. Although lower in cost than some removal options, vitrification requires specialized equipment and an off-gas treatment system that results in higher costs than other in situ treatment alternatives. Total costs are approximately $566 million of which $500 million is capital and $66 million is O&M cost.

3.2.5.4 Screening Summary

In situ vitrification is an unverified technology option and is difficult to verify in field practice. Electromechanical and venting subsystem breakdowns may create both worker and environmental

DRAFT

exposure risks that could far exceed physical stabilization risks. Therefore, in situ vitrification was given an overall rating of 24.

3.2.6 Alternative 4 - Removal, Waste Treatment, and On-Property Disposal

3.2.6.1 Effectiveness

Protection of Human Health

The short-term effectiveness of this alternative rates a 3 because this removal action involves the risk of a waste handling accident during the removal, treatment, packaging, and transportation for on-property disposal.

The long-term effectiveness of this alternative rates a 4 because the waste is treated before storage over a vulnerable aquifer near a major population area.

Protection of the Environment

The short-term effectiveness of this alternative rates a 3 because this removal action involves the risk of a waste handling accident during the removal, treatment, packaging, and transportation for on-property disposal.

The long-term effectiveness of this alternative rates a 4 because the waste is treated before storage over a vulnerable aquifer near a major population center.

Reduction in Toxicity, Mobility, and Volume

This alternative rates a 4 in this category because the waste is physically stabilized or vitrified and placed in an engineered disposal facility. However, perpetual maintenance and monitoring will be required to maintain the disposal facility.

If vitrification is used, there may be a 20 to 40 percent reduction in waste volume, and if physical stabilization is used there may be a 30 to 40 percent increase in waste volume. All percentages are preliminary estimates.

DRAFT

3.2.6.2 Implementability

Constructibility

This alternative rates a 3 in this category. Although the removal methods, stabilization methods, and on-property disposal facility being considered are based on available and proven technology, the waste segregation facility subsystems (i.e., conveyor feeds and crusher/shredders) may present design and startup problems.

Reliability

This alternative rates a 3 because of its greater complexity. There is a greater probability of schedule and operational delays. Due to waste variabilities, vitrification and cement mixtures may require extensive adjustments.

Maintenance/Operation

Following implementation of the remedial action, perpetual maintenance and monitoring will be required to ensure that RAOs are met. The long-term maintenance will include mowing and care of the vegetative cover over the engineered disposal facility to prevent erosion and the natural vegetative succession to species whose roots could intrude into the cap. Monitoring will include groundwater and radon sampling. This alternative, better than Alternative 2, rates a 4. Less maintenance will be required to maintain the RAOs for an engineered disposal facility than for an in situ waste containment design. The cost of postclosure monitoring and maintenance for 30 years following closure is included in the estimate for the alternative.

Special Engineering and Equipment

This alternative rates a 3 in this category because of the relatively unique removal, segregation, and processing equipment required.

3.2.6.3 Cost

The total cost of this alternative is approximately $1.24 to $1.80 billion, of which $1.22 to $1.78 billion is capital cost and $66 million is long-term operating costs.

3.2.6.4 Screening Summary

The advantages of this alternative are its effective waste treatment and above-average, long-term effectiveness at moderate cost. Its primary disadvantages are its moderate short-term effectiveness caused by risks associated with waste treatment and the reduced implementability caused by the relative complexity of the waste treatment processes. This alternative receives an overall ranking of 31.

3.2.7 Alternative 5 - Removal, Waste Treatment, and Off-Site Disposal

3.2.7.1 Effectiveness

Protection of Human Health

The short-term effectiveness of this alternative rates a 2 in this category because this waste removal action involves the risk of a handling accident during the removal, treatment, packaging, and transportation for off-site disposal.

The long-term effectiveness of this alternative rates a 5 because after treatment and appropriate packaging, the FMPC waste would be shipped to an approved off-site waste disposal facility for permanent disposal.

Protection of the Environment

The short- and long-term effectiveness of this alternative rates the same as for protection of human health.

Reduction in Toxicity, Mobility, and Volume

This alternative rates a 5 as the waste is removed from the site.

3.2.7.2 Implementability

Constructibility

This alternative is identical to Alternative 4 in this category.

Reliability

This alternative is identical to Alternative 4 in this category.

Maintenance

This alternative will require no perpetual maintenance or monitoring because the waste will not be stored on property. This alternative rates a 5 in this category.

DRAFT

Special Engineering and Equipment

This alternative is identical to Alternative 4 in this category.

3.2.7.3 Cost

The cost of this alternative is high. Transportation constitutes a great majority of the cost of this alternative. Total costs are estimated at $1.82 to $2.25 billion, all of which is capital cost because no waste is left on property.

3.2.7.4 Screening Summary

The primary advantages of this alternative are its excellent long-term effectiveness and nonexistent FMPC maintenance and operational costs. The primary disadvantages are the high cost and below-average, short-term effectiveness caused by waste transportation risks. This alternative receives an overall ranking of 32.

DRAFT

TABLE 3-1.
ALTERNATIVE RANKINGS

Alternative Number	0	1	2	3	4	5
Short-Term Human Health	1	3	4	3	3	2
Short-Term Environmental Protection	1	2	3	3	3	2
Long-Term Human Health	1	2	3	3	4	5
Long-Term Environmental Protection	1	2	3	3	4	5
Reduction in Mobility, Toxicity, and Volume	1	2	3	4	4	5
Contructability	5	3	4	2	3	3
Reliability	1	2	4	2	3	3
Maintenance	1	2	3	2	4	5
Special Engineering & Equipment	5	3	4	2	3	3
Summation	17	21	31	24	31	33
Relative Cost (Millions of Dollars) - Capital	0	100	139	500	1,500	2,000
Relative Cost (Millions of Dollars) - Long term O&M (P.W.)	9	66	66	66	20	0

RATING SCALE
1 = Unfavorable
2 = Below Average
3 = Average
4 = Above Average
5 = Highly Favorable

ALTERNATIVE DESCRIPTIONS
Alternative 0 - No Action
Alternative 1 - Nonremoval, Slurry Wall, and Cap
Alternative 2 - Nonremoval, Physical Stabilization, Slurry Wall, and Cap
Alternative 3 - Nonremoval, Vitrification, and Cap
Alternative 4 - Removal, Waste Treatment, and On-Site Disposal
Alternative 5 - Removal, Waste Treatment, and Off-Site Disposal

000132

6438

4.0

4.0 DETAILED ANALYSIS OF REMEDIAL ALTERNATIVES

4.1 INTRODUCTION

The purpose of this detailed analysis is to assess each of the alternatives discussed in previous sections with respect to the evaluation criteria established by EPA. The criteria have been developed to ensure that the detailed analysis encompasses regulatory requirements and identifies the overall feasibility and acceptability of each remedial alternative under consideration. EPA has established a three-tiered hierarchy for selecting a remedy. In the first tier, threshold criteria address an alternative's overall protection of human health and the environment based on analysis results from the primary balancing criteria, as well as compliance with ARARs and TBCs. (ARARs and TBCs are given in Appendix D.) An alternative must meet the first-tier criteria to be included for further consideration. The second tier contains the primary balancing criteria. These criteria include the long-term effectiveness and permanence of each alternative remedy; its ability to reduce the toxicity, mobility, and volume of contaminants through treatment; its short-term effectiveness while the remedial action is in progress; its overall implementability; and its cost. The final tier contains the modifying criteria of state and community acceptance, evaluated before selecting a site remedy in the Record of Decision (ROD). The criteria under the modifying tier are not specifically evaluated during the detailed analysis process.

The detailed analyses of alternatives against these evaluation criteria consist of the following components:

- Further definition of each alternative, if necessary, with respect to the volumes or areas of contaminated media to be addressed, the technologies to be used, and any performance requirements associated with those technologies
- An assessment and a summary profile of each alternative against the evaluation criteria
- A comparative analysis among the alternatives to assess the relative performance of each alternative with respect to each evaluation criterion

The first component in the detailed analysis of alternatives was further definition of each alternative. The initial screening of alternatives identified the following four alternatives to be carried forward for detailed analyses:

- Alternative 0 - No Action
- Alternative 2 - Nonremoval, Physical Stabilization, Slurry Wall, and Cap
- Alternative 4 - Removal, Waste Treatment, and On-Property Disposal
- Alternative 5 - Removal, Waste Treatment, and Off-Site Disposal

The detailed analyses further identified two significantly different process options for waste treatment within Alternatives 4 and 5 - vitrification and cement stabilization. Therefore, the detailed analyses conducted in this section further break down the alternatives as:

- Alternative 0 - No Action
- Alternative 2 - Nonremoval, Physical Stabilization, Slurry Wall, and Cap
- Alternative 4A - Removal, Cement Stabilization, and On-Property Disposal
- Alternative 4B - Removal, Vitrification, and On-Property Disposal
- Alternative 5A - Removal, Cement Stabilization, and Off-Site Disposal
- Alternative 5B - Removal, Vitrification, and Off-Site Disposal.

This increases the total number of alternatives evaluated to six. Additional detailed information on each alternative was then developed.

The second and third components of the detailed analyses were an individual assessment of each alternative against the evaluation criteria (Section 4.2) and the comparison of alternatives against the evaluation criteria (Section 4.3).

4.2 INDIVIDUAL ANALYSIS OF ALTERNATIVES

The results of this section are tabulated in Table 4-1 at the end of Section 4.0.

4.2.1 Alternative 0 - No Action

4.2.1.1 Description

This is the no-action alternative that provides no remediation and simply leaves the six waste pits, the Burn Pit, and Clearwell in their present state. This alternative includes the installation of long-term monitoring equipment. The no-action alternative provides a baseline against which the other alternatives can be compared.

4.2.1.2 Assessment

- Overall protection of human health and the environment - Based on the results of the baseline risk assessment, this alternative fails to provide the required protection to human health and the environment. The potential for release of contaminants via leaching from the pits into groundwater or via surface water runoff would not be eliminated. The RAOs for drinking water would not be met.

- Compliance with ARARs - This alternative does not comply with applicable federal regulations. Surface water runoff from the pits that may contaminate groundwater or leaching of pit constituents directly into groundwater in the future would exceed the limits of 40CFR141.11, 15, and 16 for chemicals and radionuclides in drinking water.

- Long-term effectiveness and permanence - This alternative does not provide a long-term solution that is effective and permanent. The magnitude of risk would not be reduced from its current level.

- Reduction of toxicity, mobility, or volume through treatment - Because no treatment would take place in this alternative, there would be no reduction of toxicity, mobility, or volume.

- Short-term effectiveness - The environmental impacts attributable to the waste pits would continue.

- Implementability - This action would be easy to implement because no action other than an improved monitoring system would be taken.

- Cost - The total estimated net present worth capital cost for this alternative is $0. The total net present worth O&M cost, including the cost of the required five-year CERCLA reevaluations would be as much as $9 million.

4.2.2 Alternative 2 - Nonremoval, Physical Stabilization, Slurry Wall, and Cap

4.2.2.1 Description

This alternative is intended to decrease the void volume in the waste and isolate the waste from the environment thereby minimizing the release of contaminated leachate to the underlying Great Miami Aquifer. This involves the surcharging or compaction of the pit wastes to decrease void space in the pits, removal and treatment of any standing water and subsurface water displaced by the surcharging or compaction process, subsurface flow control measures, construction of a closure cap, and storm water runoff and run-on control measures. The subsurface flow control measures combine a slurry wall, subsurface drains, and a groundwater control system (Figure 3-2).

Surcharging is performed by mounding or overburdening the area of treatment with large quantities of fill soil for a period of time (a few weeks to several months). After the compaction goal is achieved, the soil overburden may be removed and discarded, used for fill before capping, or used for surcharging another area.

Surcharging is used most effectively in free-draining soils. This method can be used in fine and cohesive soils by installing sand drains, collection trenches and sumps, or wick drains to decrease the waste consolidation time.

The contaminated water collected from the drains or sumps would be treated in a system similar to the system shown in Figure 4-1.

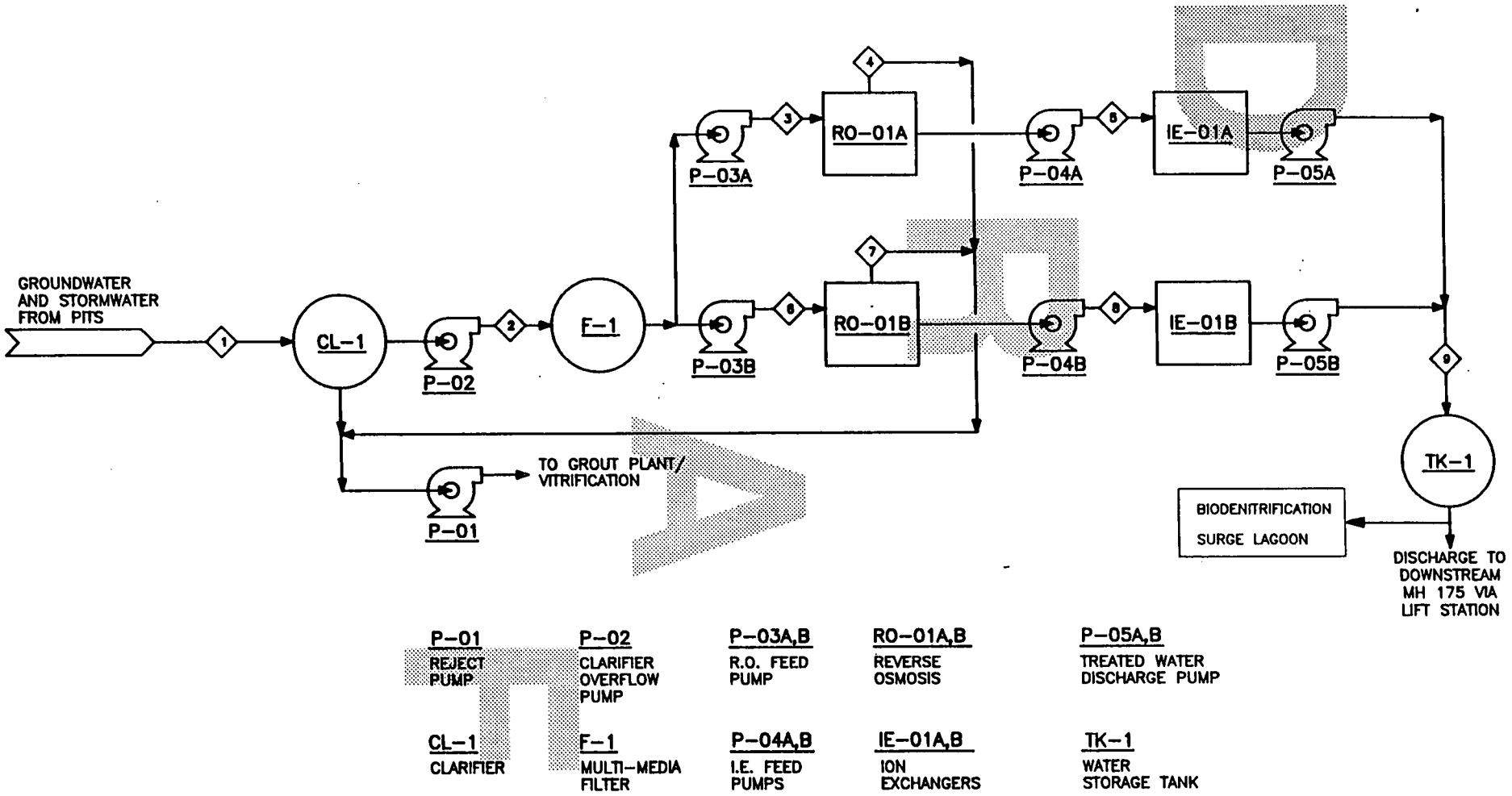

COMPONENT/STREAM NO.	1	2	3	4	5	6	7	8	9
MASS FLOW (lb/hr)	125839	125021	62300	12510	49790	62300	12510	49790	99580
H2O (lb/hr)	124580	124396	62300	12510	49790	62300	12510	49790	99580
SOLIDS (lb/hr)	1258	625	0	0	0	0	0	0	0
% SOLIDS	1	.5	0	0	0	0	0	0	0
VOL. FLOW (gpm)	250	249	124.5	25	99.5	124.5	25	99.5	199

FIGURE 4-1. WATER TREATMENT FLOWSHEET – ALTERNATIVE 2

303317-A-G170/OU1-TK15/KNOX

4.2.2.2 Assessment

- Overall protection of human health and the environment - This alternative is protective of human health and the environment because migration of pit constituents into groundwater and other media would be significantly reduced. The residual risks associated with this alternative will be quantified in the next draft of this document. This alternative would protect human health and the environment by accomplishing the following:

  - The infiltration rate of rain water into the pits would be reduced from 10 inches per year to 2 inches per year.

  - The porosity of the pit waste/soil would be decreased due to compaction.

  - Pit constituents would no longer leach via surface water runoff.

  - Airborne emissions from the pits would be eliminated.

  - Surface water, groundwater, and water from the pits would be collected and treated.

- Compliance with ARARs - Because of the assumptions described above, this alternative meets all ARARs.

- Long-term effectiveness and permanence - Potential exposures from pit contents via groundwater is a concern. Direct radiation exposure from the pits will be virtually eliminated as long as the cap remains in place. The cap will cover and contain any contaminated soil around the pits and prevent erosion. This alternative requires maintenance in perpetuity, including periodic inspections to detect any settlement, pondings of liquids in settled portions of the cap, erosion, and invasion by deeply rooted vegetation. Monitoring wells are required to detect any leachate migration and require periodic replacement.

  Because this alternative leaves hazardous substances on property, a review will be conducted at least every five years to ensure that the remedy continues to provide adequate protection of human health and the environment in accordance with CERCLA Section 121(c).

- Reduction of toxicity, mobility, or volume through treatment - This alternative treats the waste by compacting it, reducing the void space available for leachate generation, thereby reducing the mobility of the contamination. The volume of the waste is also decreased by the compaction process. There is no effect on the toxicity of the waste in the pits as a result of this alternative.

- An analysis of the multilayer cap design was performed by utilizing the Hydrologic Evaluation of Landfill Performance (HELP) Model Version 2.05 by the U.S. Army Corps of Engineers (COE) Waterways Experiment Station. The simulation cap profile of Figure 4-2 corresponds to the proposed design of the cap shown in Figure 2-3. The HELP default soil characteristics and the Cincinnati, Ohio climatological data were utilized in the analysis. Three case scenarios were evaluated by varying the slope of the lateral drainage layer at the cap base and varying the maximum drainage distance horizontally to the collection.

Cross Section of HELP Cap Profile

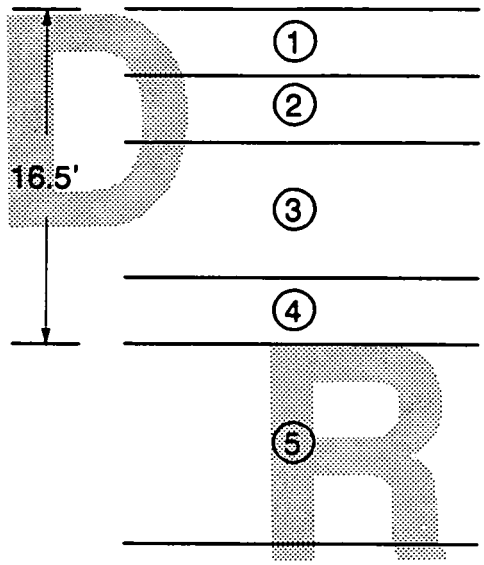

1. Vegetative Layer
2. Drainage Layer (Kv = 1.0E-03 cm/s min.)
3. Barrier Soil Liner
   - Upper portion - 5 feet of Rolled Compacted Concrete (RCC)
   - Lower portion - 4 feet of Low Permeability Clay (Kv = 1.0E-07 cm/s max.)
4. Common Compacted Fill
5. Contaminated Waste

HELP Constituent Input Data

Layer	Thickness		Layer Type	Soil Texture		Compacted
	inches	feet		USDA	USCS	
1	24	2	Vertical Percolation	SiL	ML	No
2	24	2	Lateral Drainage	LFS	SM	No
3	108	9	Barrier Soil Liner	Liner Soil	Liner Soil	N/A
4	42	3.5	Vertical Percolation	SCL	SC	YES
5	324	27	Vertical Percolation	Municipal Waste	Municipal Waste	N/A

NOTES:
1) HELP climatological data and soil characteristic default values utilized.
2) Per HELP criteria, barrier soil liners cannot be adjacent. Therefore, RCC and clay liner are assumed to act jointly.
3) Depth of Operable Unit 1 Waste Pit 3 assumed.
4) Kv denotes vertical permeability.
5) Closure cap surface area = 1,600,000.0 square feet.
6) Fair grass cover assumed for vegetative layer.

FL/FMCP-0415-2/4-1

FIGURE 4-2. HELP MODEL INPUT PARAMETERS

A cap surface area of 1.6 million square feet was maintained for each case. For the waste layer, the 27-foot depth of Waste Pit 3 was assumed. The HELP output data utilized the average annual precipitation total of 40.64 inches and the peak daily precipitation value of 2.40 inches for the default climatological data for a five-year period. The precipitation was distributed over the surface area of the closure cap to produce a total precipitation of 5,418,934 cubic feet and 320,000 cubic feet, respectively, for the summary output.

For the vegetative soil layer, a fair grass cover with an evaporative zone depth of 21 inches was selected in lieu of a good to excellent grass cover in the input data for conservative purposes. Additional default valves for the growing season for the Cincinnati area and latitude were selected.

Before the construction of the closure cap, Waste Pits 1 through 4 and the Burn Pit would be physically stabilized by surcharging as depicted in Figure 2-4. Waste Pits 5 and 6 and the Clearwell will require removal and treatment of any standing water and stabilization by SSM. Utilization of the previous technologies would minimize structural defects to the closure cap due to subsidence and introduction of contaminated leachate into the groundwater and underlying Great Miami Aquifer.

Per the HELP output data of Figure 4-3, a selection of a twenty percent slope of drainage layer at the closure cap base and a 50-foot maximum drainage distance horizontally to collection pipes in the drainage layer, achieved the greatest efficiency of the drainage layer. As a result, the head on the liner system of Case 1 is noticeably reduced versus Cases 2 and 3. Per RCRA regulations, a head of 12 inches or less must be achieved on the liner system. With a reduction of the head on the liner system, percolation from the liner system and waste layer is correspondingly reduced.

- Short-term effectiveness - Because there is no handling of the materials in the pits, the threat to the community and workers would be minimal. There is a slight possibility for minor amounts of fugitive dusts, fumes, and odors associated with heavy equipment during the surcharging operations and during construction of the cap. The configuration of the cap would require altering the course of Paddys Run. Primary surface water quality impacts will be turbidity resulting from construction runoff and direct disturbance of the stream banks and bed associated with stream relocation. Impacts on Paddys Run biota will be short-term losses of riparian and aquatic habitat and associated species. There will be short-term losses of grass and habitat, with associated impacts on terrestrial species during construction in capped and slurry wall areas that will be reestablished on completed surfaces. Groundwater flow would be diverted around the unit by the slurry wall. Transport of construction materials for the cap and slurry wall could cause community disturbances such as traffic congestion, increased noise, and road degradation.

Workers would be protected during remedial action by practices that reduce radiation exposure to levels as low as reasonably achievable (ALARA) and by industrial health and safety measures.

- Implementability - Caps and slurry walls are routinely constructed and have been utilized at other DOE facilities. Surcharging pits to decrease void space in the waste and soils has been performed on several stabilization projects in the past. No delays due to technical problems are anticipated.

CASE	SLOPE OF DRAINAGE LAYER AT CAP BASE	MAXIMUM DRAINAGE DIST. HORIZONTALLY	AVERAGE ANNUAL TOTALS			PEAK DAILY VALUES FOR 1974 THROUGH 1978			
			Lateral drainage from drainage layer	Percolation from soil liner	Percolation from waste layer	Lateral drainage from drainage layer	Percolation from soil liner	Head on soil liner	Percolation from waste layer
1	20 %	50 ft	18.29 %	2.11 %	2.15 %	0.1530 in. 20399.7 cu. ft.	0.0036 in. 483.0 cu. ft.	7.0 in	0.0025 in. 339.8 cu. ft.
2	15 %	50 ft	17.66 %	2.18 %	2.16 %	0.099 in. 13201.4 cu. ft.	0.0038 in. 506.1 cu. ft.	12.5	0.0025 in. 339.9 cu. ft.
3	20 %	100 ft	17.78 %	2.27 %	2.20 %	0.1224 in. 16323.5 cu. ft.	0.0038 in. 500.7 cu. ft.	11.2 in	0.0026 in. 340.3 cu. ft.

FIGURE 4-3. HELP ANALYSIS RESULTS USING DEFAULT CLIMATOLIGICAL DATA (1974 THROUGH 1978) AND SOIL CHARACTERISTICS

Future remedial action is likely to involve the addition of new protective layers and/or modifications to existing layers of the cap. Such action would require a minimum effort and would likely involve only the outer layers of the cap.

Monitoring would consist of visual inspection, leachate detection, and groundwater sampling. Coordination with other agencies is part of the approval process. The level of coordination that would be required for this alternative is minimal because the waste remains on property.

It has been assumed that clays capable of providing a permeability no greater than 10^{-7} cm/s are regionally available. If this is not true, satisfactory materials could be hauled in from wherever available. All other necessary equipment, specialists, and technologies are readily available.

- Cost - The total estimated net present worth capital cost for this alternative is $139 million. The total net present worth O&M cost, including the cost of the required five-year CERCLA reevaluations, would be as much as $66 million. Detailed cost estimate information can be found in Appendix F.

4.2.3 Alternative 4A - Removal, Waste Treatment (Cement Stabilization), and On-Property Disposal

4.2.3.1 Description

Alternative 4A is intended to completely remove the waste and dispose of it in an on-property engineered disposal facility. Remediation facilities (as shown in Figures 4-4 and 4-5) will be required for waste treatment. This process includes the removal and treatment of standing water, waste removal, waste segregation, treatment, and final disposal (Figures 4-6, 4,7, and 4-8).

There are three waste removal technology options. Depending on the physical nature of the pit sludges, including water content and the presence of standing surface water, hydraulic or pneumatic removal (Figure 4-9) and/or mechanical removal technologies can be employed. Figure 4-10 depicts the proposed progression of the mechanical removal process sequence.

Pits 1 through 4 and the Burn Pit contain actual or assumed quantities of drums, construction rubble, and/or miscellaneous site debris. Therefore, extensive waste segregation activities will require mechanical shredders, crushers, compactors, and balers, as well as a separate facility for drum handling, sampling, and treatment as required.

After segregation, the remaining sludge material will be treated using cement stabilization before disposal.

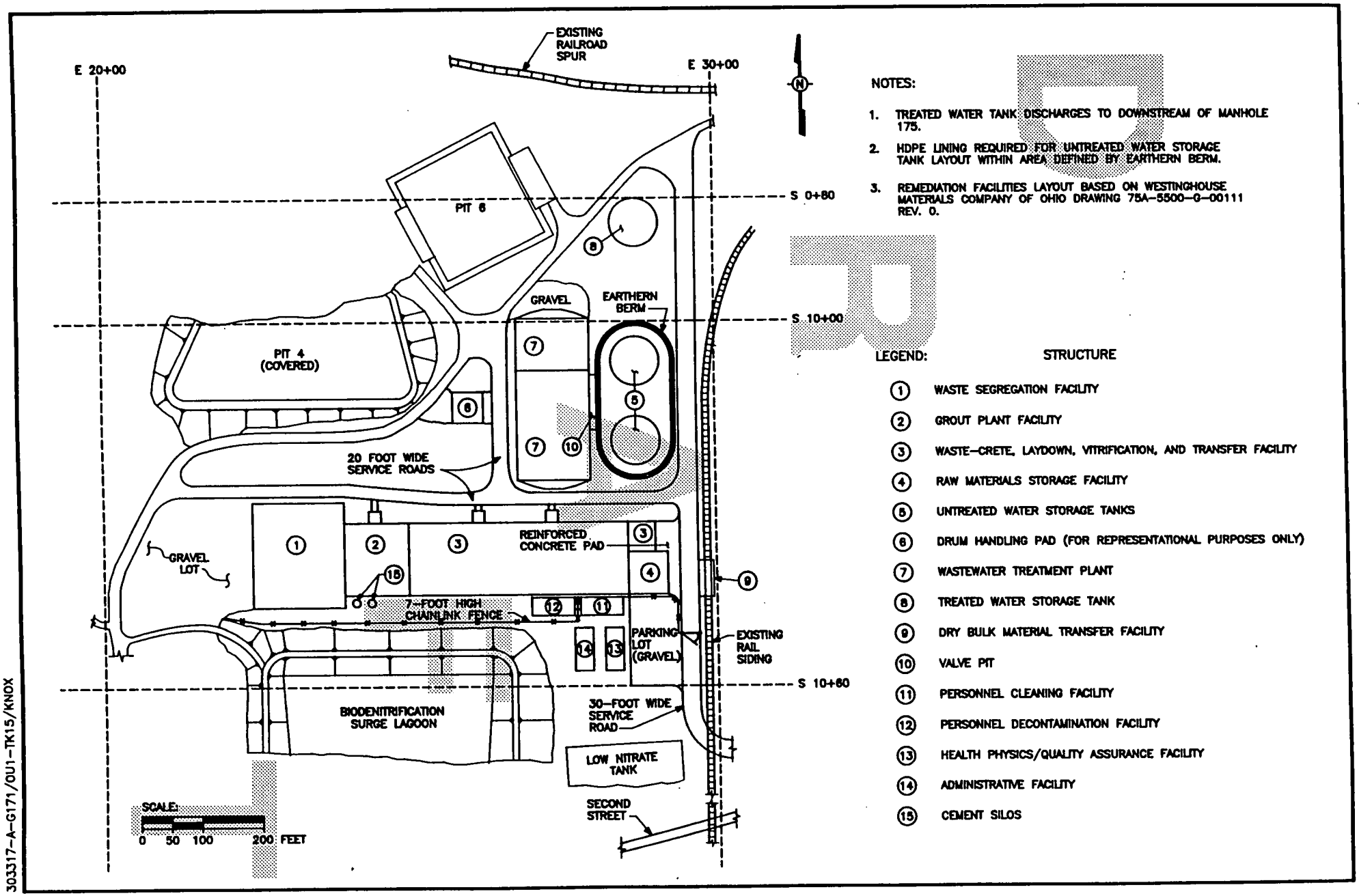

FIGURE 4-4. PLAN VIEW OF REMEDIATION FACILITIES – ALTERNATIVES 4 AND 5

303317-A-G171/OU1-TK15/KNOX

00112

0438

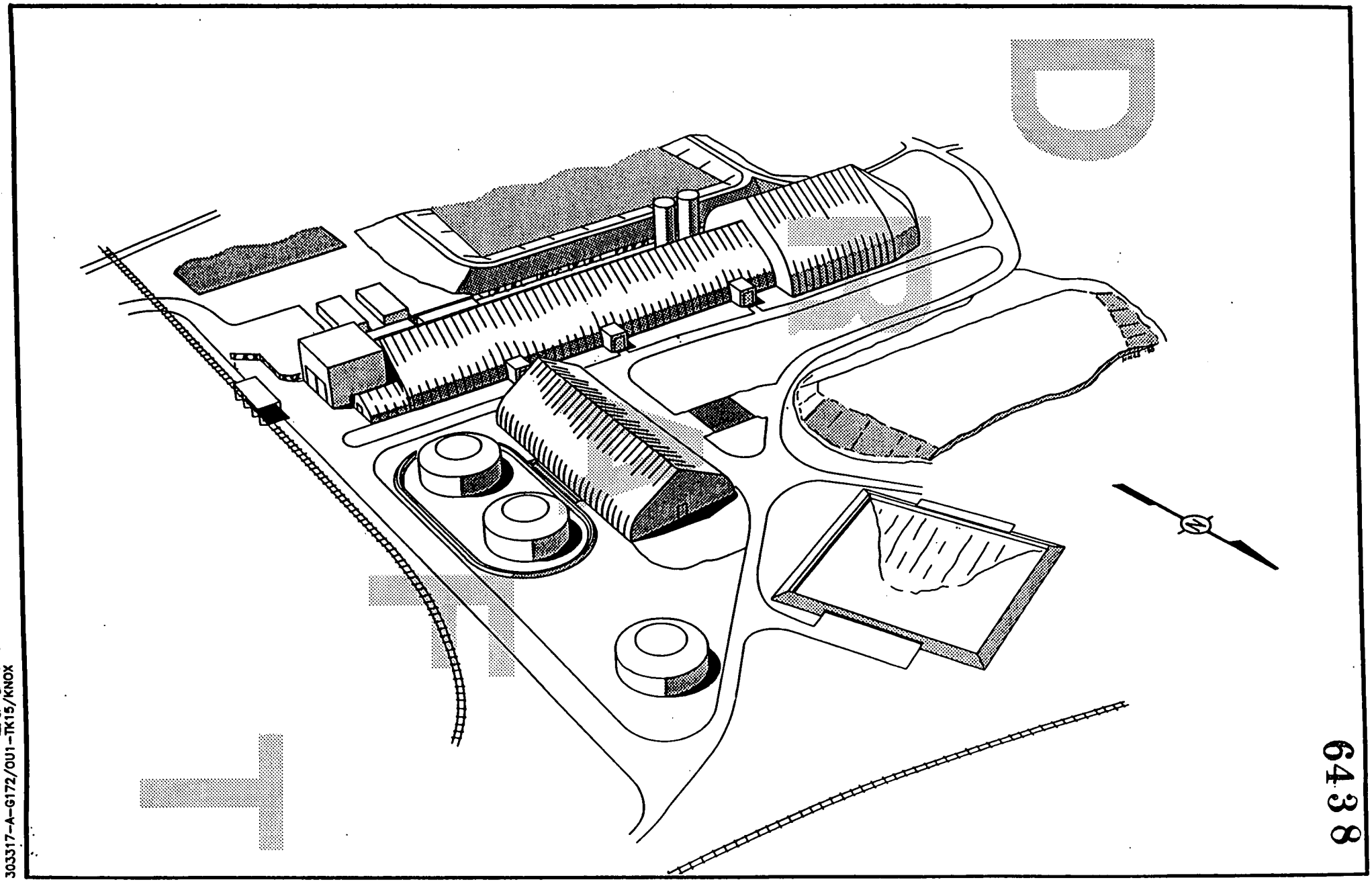

FIGURE 4–5. CONCEPTUAL VIEW OF REMEDIATION FACILITIES – ALTERNATIVES 4 AND 5

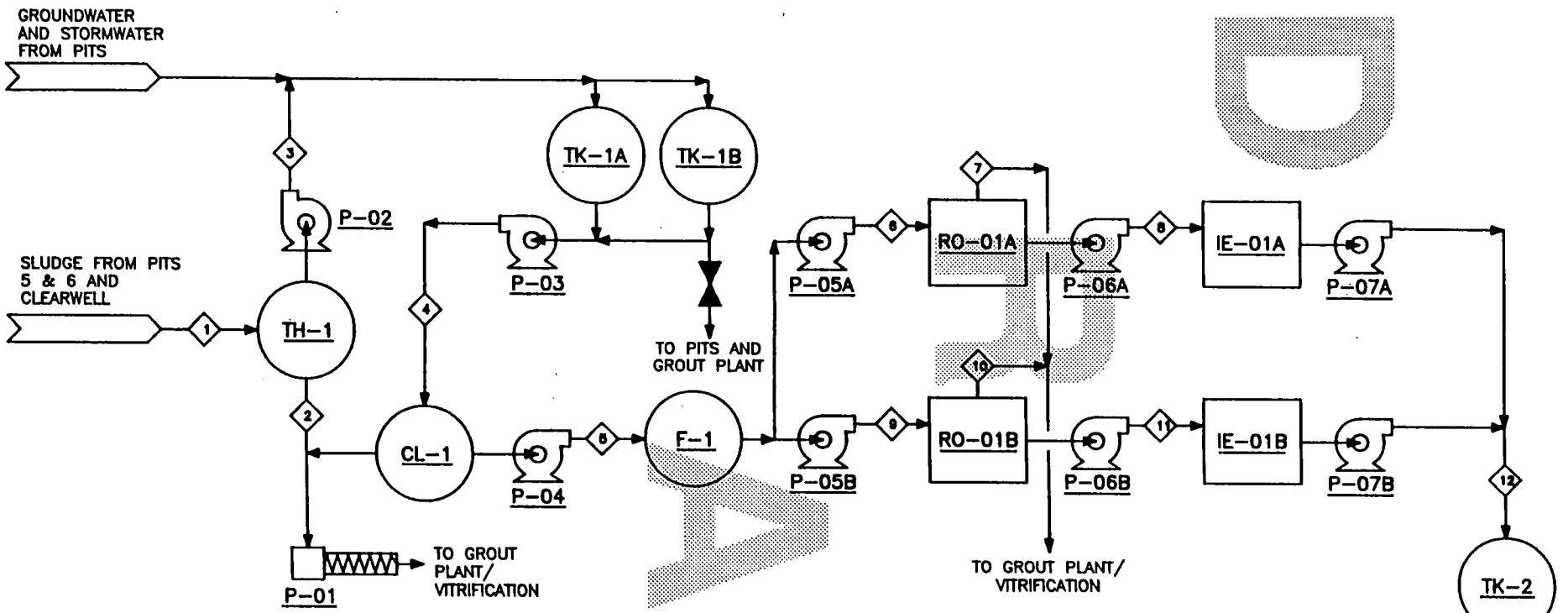

TH-1 THICKENER	**P-02** OVERFLOW PUMP	**P-03** CLARIFIER FEED PUMP	**P-04** CLARIFIER OVERFLOW PUMP	**P-05A,B** R.O. FEED PUMP	**RO-01A,B** REVERSE OSMOSIS	**P-07A,B** TREATED WATER DISCHARGE PUMP
P-01 UNDERFLOW PUMP	**TK-1A,B** NON-TREATED WATER STORAGE TANKS	**CL-1** CLARIFIER	**F-1** MULTI-MEDIA FILTER	**P-06A,B** I.E. FEED PUMPS	**IE-01A,B** ION EXCHANGERS	**TK-2** WATER STORAGE TANK

COMPONENT/STREAM NO.	1	2	3	4	5	6	7	8	9	10	11	12
MASS FLOW (lb/hr)	141777	93009	48768	125839	125021	62300	12510	49790	62300	12510	49790	99580
H2O (lb/hr)	113422	65106	48316	124580	124396	62300	12510	49790	62300	12510	49790	99580
SOLIDS (lb/hr)	28355	27903	452	1258	625	0	0	0	0	0	0	0
% SOLIDS	20	30	<1	1	.5	0	0	0	0	0	0	0
VOL. FLOW (gpm)	250	153	97	250	249	124.5	25	99.5	124.5	25	99.5	199

FIGURE 4-6. WATER TREATMENT FLOWSHEET – ALTERNATIVES 4 AND 5

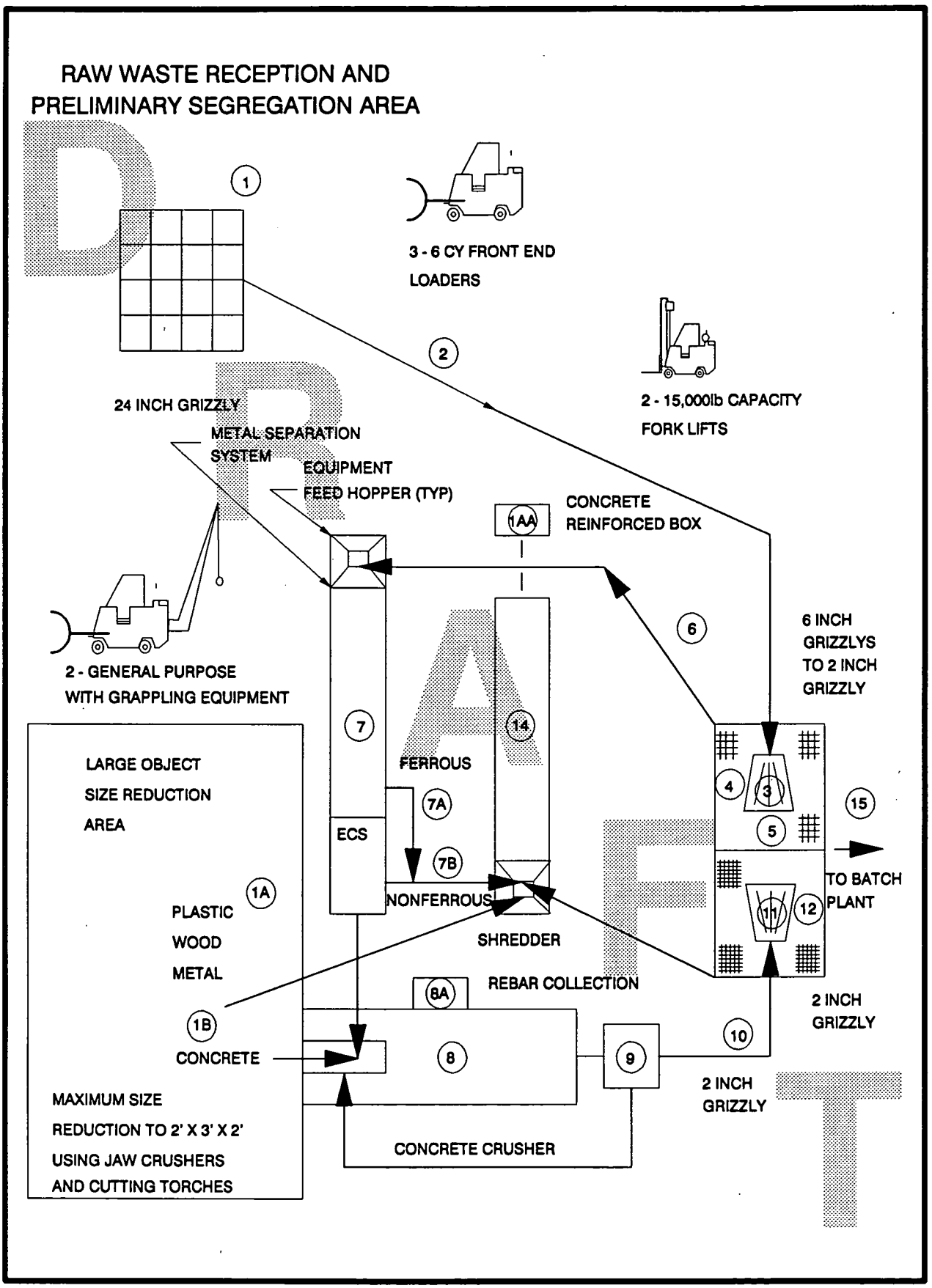

FL/MPC-0115-2/4-7

FIGURE 4-7. WASTE SEGREGATION FACILITY LAY-OUT FOR ALTERNATIVES 4 AND 5

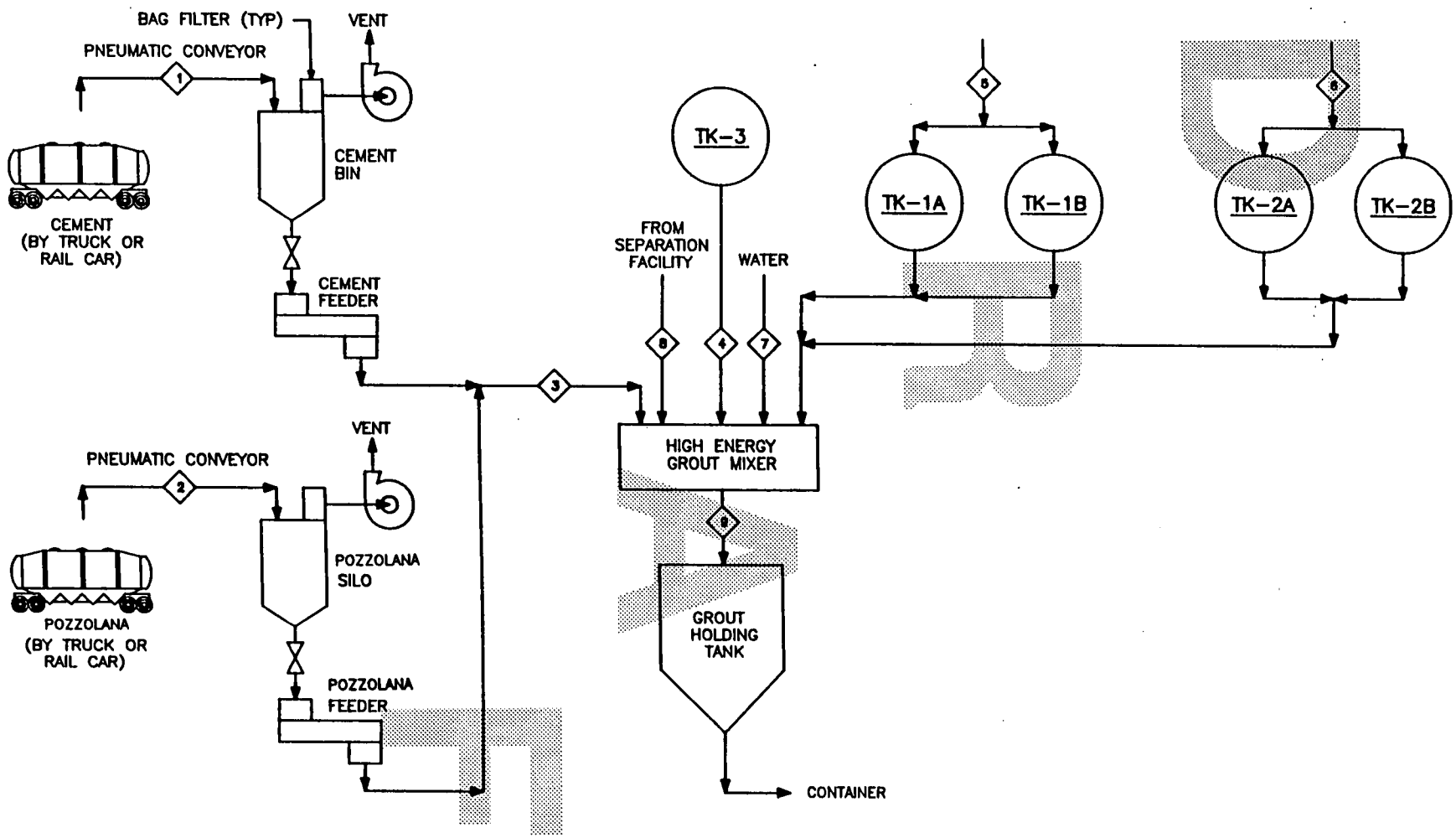

COMPONENT/STREAM NO.	1	2	3	4	5	6	7	8	9
MASS FLOW (lb/hr)	151,000	13,990	164,990	755	25,020	93827	112,800	247,722	645,114
H2O (lb/hr)	0	0	0	0	25,020	65290	112,800	54,942	258,052
SOLIDS (lb/hr)	151,000	13,990	164,990	755	0	28531	0	192,780	387,062
% SOLIDS	100	100	100	100	0	30+	0	77.8	60
VOL. FLOW (gpm)	–	–	–	–	50	154	225		

TK-3
ADMIXURE TANK

TK1A,B
15,000 GAL STORAGE TANKS FOR <30WT% SOLIDS

TK2A,B
15,000 GAL STORAGE TANKS FOR >30 WT% SOLIDS

FIGURE 4-8. GROUT PROCESSING FLOWSHEET – ALTERNATIVES 4B AND 5B

303317-A-G174/OU1-TK15/KNOX

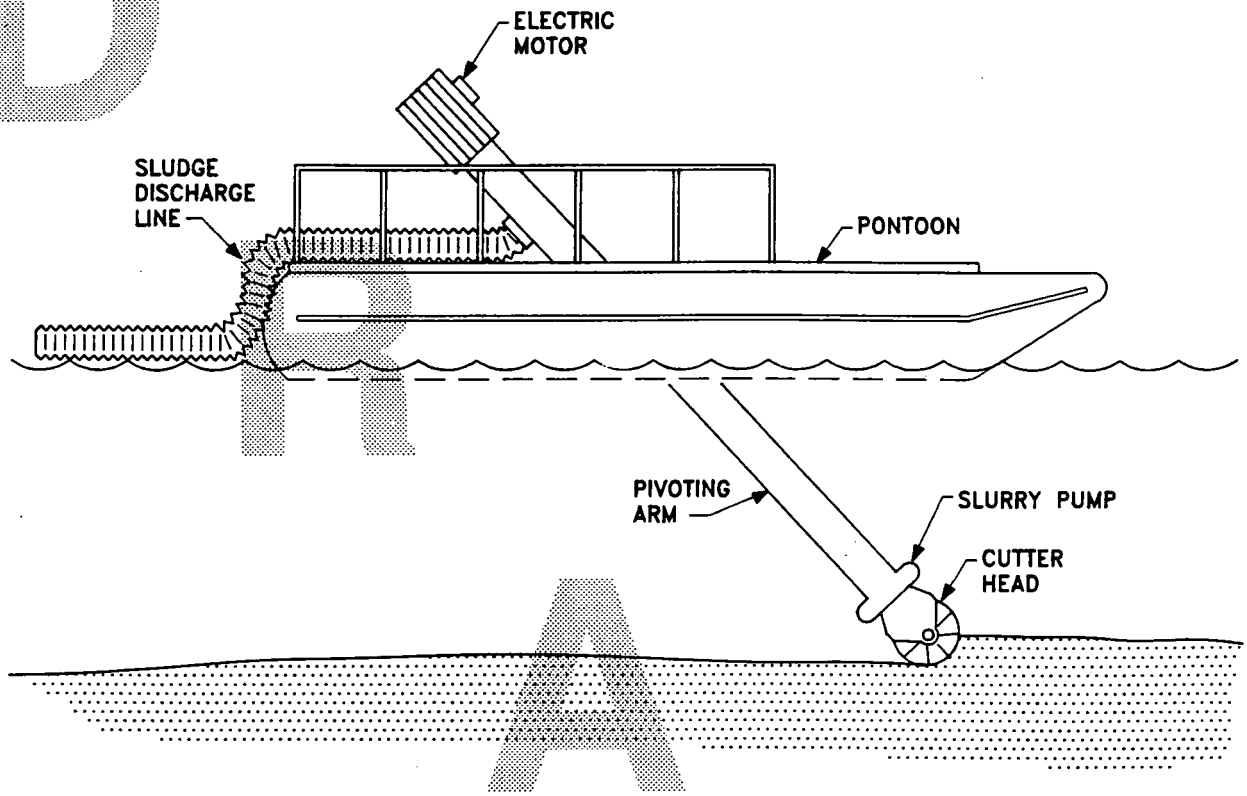

NOTES:

1. DREDGE AUTOMATICALLY TRAVERSES THE PIT USING DREDGE MOUNTED WINCHES AND CABLES ATTACHED TO CONCRETE POSTS LOCATED AT THE PERIMETER OF THE PIT.
2. PIVOTING ARM GIVES DREDGE CAPABILITY TO DREDGE MATERIAL RANGING FROM 0 TO 8 FEET BELOW THE WATER.
3. DREDGE WILL DISCHARGE SLURRY OF 20% SOLIDS. FLOW RATE IS VARIABLE UP TO 800 GPM AND WILL AVERAGE 250 GPM.

303317-A-G175/OU1-TK15/KNOX
ACAD\DRAWINGS\FERN-7

FIGURE 4-9. HYDRAULIC OR PNEUMATIC REMOVAL – ALTERNATIVES 4 AND 5

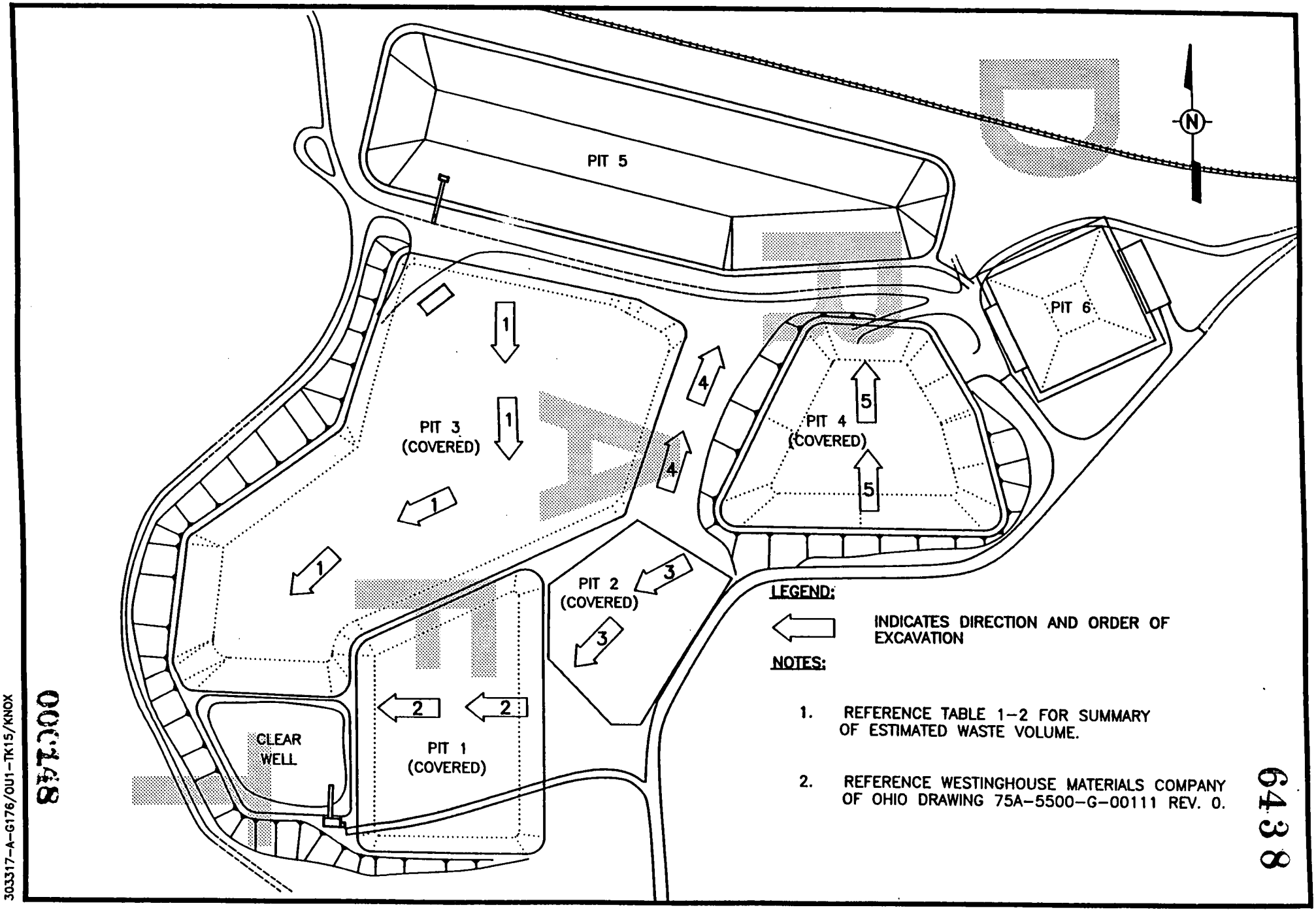

FIGURE 4-10. PLAN VIEW OF EXCAVATION PROCESS – ALTERNATIVES 4 AND 5

303317-A-G176/OU1-TK15/KNOX

00C148

6438

Any water not utilized by the cement stabilization treatment technologies will be processed by the water treatment plant constructed for use during Operable Unit 1 remediation or a site-wide wastewater treatment plant if available. The technologies under review for the water treatment plant include:

- Clarification
- Filtration
- Ion exchange
- Reverse osmosis

If future sampling or treatability studies determine that the organic contaminants are of a type or concentration that could have detrimental effect on the stabilization process, the process would have to include a pretreatment step to remove or destroy these organics (such as carbon adsorption, drying, or ultraviolet treatment). After treatment, the resultant waste form will be transferred from a temporary holding area to either an engineered disposal facility or series of above-grade structures. Although both the engineered disposal facility and above-grade structure provide containment, the engineered disposal facility will be retained as the representative process option. The reinforced concrete roof of the above-grade structure will function as the cap intrusion barrier component.

As with all on-property disposal technologies including in situ stabilization, a properly designed site, regularly scheduled monitoring, and facility maintenance programs will be required throughout some specified postclosure period.

The following assumptions are made in reference to Alternatives 4A and 4B:

- The engineered disposal facility will not be built on any wetland.
- The engineered disposal facility will function similarly to an off-site depository.
- The engineered disposal facility will be equipped with a leachate collection/detection system.
- The engineered disposal facility will sit on a concrete pad.
- The engineered disposal facility will be equipped with a roller-compacted concrete intrusion barrier.
- The engineered disposal facility will have sloped sides for surface water diversion.
- The engineered disposal facility will be covered with vegetation for erosion control.

- Cement-stabilized wastes (Alternative 4A) will undergo quality assurance (QA) testing for free liquids, compressive strength, and leachability (toxicity characteristic leaching procedure [TCLP]) before permanent disposal in the engineered disposal facility.

- Vitrified wastes (Alternative 4B) will undergo QA testing for leachability before permanent disposal in the engineered disposal facility.

- The vitrification (Alternative 4B) process will include an enclosed off-gasing system with filtration mechanism to collect radon and volatilized chemicals.

- Residual soil testing will be performed to ensure that remaining soils meet cleanup criteria.

4.2.3.2 Assessment (Alternative 4A)

- Overall protection of human health and the environment - Based on the assumptions described above, this alternative is protective of human health and the environment. Waste is removed and treated, thus migration of contaminants to a receptor is eliminated.

- Compliance with ARARs - Based on the assumptions described above, this alternative meets all ARARs. Waste is removed and treated, thus migration to environmental media in concentrations above regulatory limits is eliminated.

- Long-term effectiveness and permanence - Some residual risk from on-property disposal would be present, but it is greatly reduced from the baseline residual risk. All RAOs for direct radon emission, groundwater contamination, and erosion of contaminated soil are met.

  The engineered disposal facility for on-property disposal of the material requires long-term maintenance. This would include periodic inspection to detect settlement, ponding of liquids in settled areas, erosion, and invasion by deeply rotated vegetation.

  Groundwater monitoring wells are required to detect any migration from the engineered disposal facility. Wells require periodic replacement. Leaching of waste into the groundwater will be unlikely because the tumulus is designed to divert rain water away from the waste. The engineered disposal facility is also designed to collect any water that might infiltrate and come in contact with the waste. In addition, the waste in its stabilized form has very low leaching potential. The leachate collection tank requires monitoring and periodic removal of collected leachate.

  Because this alternative leaves hazardous substances on property, a review will be conducted at least every five years to ensure that the remedy continues to provide adequate protection of human health and the environment in accordance with CERCLA Section 121(c).

- Reduction of toxicity, mobility, or volume through treatment - The waste material is to be stabilized. All waste material, including contaminated berm material, will be treated. This amounts to an estimated 1.2 million cubic yards of material.

  The addition of stabilizing agent (e.g., cement and fly ash) increases the total volume of treated material by approximately 30 percent to 1.6 million cubic yards.

Stabilization, supplemented by disposal in the engineered disposal facility, will provide a high level of reduction in mobility.

Stabilization of the material with cement and fly ash, followed by disposal in a facility designed to minimize water infiltration, also provides a high level of irreversibility (i.e., low probability of becoming leachate). No untreated residuals will remain.

- Environmental - Minor amounts of fugitive dust, fumes, and odors may be associated with heavy equipment operations during construction of the waste treatment, packaging and disposal facilities. Similar impacts may result from transportation of packaged waste to on-site disposal. Any failure of air or water treatment systems would result in accidental release of contaminants. There are possible impacts on terrestrial organisms and habitats, including emergent wetlands, associated with waste removal and with the siting of support and waste disposal facilities. There are possible impacts on groundwater, including the sole-source aquifer, associated with any failures of leachate collection systems in the waste disposal facility. Groundwater flow could be altered by the construction of the waste disposal facility. Treatment of standing water would generate contaminated sludges/resins that will have to be disposed of in accordance with standard waste management practices. There are possible transportation impacts associated with the need to transport materials for construction of the waste disposal and support facilities to the site.

- Short-term effectiveness - There is an increased probability of an accidental release of uranium, thorium, and radon due to waste removal. Minor amounts of fugitive dust, fumes, and odors are associated with heavy equipment operations during construction of the waste treatment, packaging, and disposal facilities and also from transportation of packaged waste to the on-property disposal facility. There are possible impacts on aquatic and terrestrial organisms and habitats, including emergent wetlands, associated with the siting of support and waste disposal facilities. Surface and groundwater impacts vary with the amount of water required for hydraulic removal. Transport of construction materials for the on-property disposal facility could cause community disturbances such as traffic congestion, increased noise, and road degradation. The waste processing building and appropriate health and safety measures will ensure protection of the workers. Construction fatalities and injuries are possible due to high labor hours for the construction of an engineered disposal facility.

  Stabilization with cement and fly ash requires approximately 72 months after the ROD.

  Removal operations will be conducted using appropriate safety measures, thus minimizing worker exposure. Removal, treatment, and packaging operations will be conducted in a controlled environment, thus minimizing the potential for an accidental release of material.

- Implementability - The stabilization technology is proven; however, treatability tests are required. Future remedial action will likely involve the addition of new protective layers and/or modifications to the existing layers of the engineered disposal facility. Such action requires a minimum effort and involves only the outer layers of the engineered disposal facility. Monitoring consists of visual inspection, leachate detection, and groundwater sampling. Monitoring wells used for sampling require periodic replacement.

The level of coordination required between agencies is minimal because the material remains on property.

All equipment and associated technical specialists are readily available for the proposed remediation effort.

The proposed technologies for material removal, treatment, handling, solidification, packaging, and storage are readily available.

- Cost - The total estimated net capital cost for the cement stabilization alternative is $1.22 billion. The total net present worth long-term O&M, including the cost of the required five-year CERCLA reevaluations, would be as much as $20 million. Details of these costs can be found in Appendix F.

4.2.4 Alternative 4B - Removal, Waste Treatment (Vitrification), and On-Property Disposal

4.2.4.1 Description

Alternative 4B is the same as Alternative 4A except for vitrification is used for stabilization in lieu of cement stabilization (Figure 4-11).

4.2.4.2 Assessment

- Overall protection of human health and the environment - Based on the assumptions described in Section 4.2.3.1, this alternative is protective of human health and the environment. Wastes are removed and treated, thus migration of contaminants to a receptor is eliminated.

- Compliance with ARARs - Based on the assumptions described above, this alternative meets all ARARs. Wastes are removed and treated, thus migration to environmental media in concentrations above federal limits is eliminated.

- Long-term effectiveness and permanence - Some residual risk from on-property disposal would be present, but it is greatly reduced from the baseline residual risk. All RAOs for direct radiation, radon emission, groundwater contamination, and erosion of contaminated soil are met.

  The engineered disposal facility for on-property disposal of the material requires long-term maintenance. This would include periodic inspection to detect settlement, ponding of liquids in settled areas, erosion, and invasion by deeply rooted vegetation.

  Groundwater monitoring wells are required to detect any migration from the engineered disposal facility. Wells require periodic replacement. Leaching of waste into the groundwater will be unlikely because the engineered disposal facility is designed to divert rain water away from the waste. The engineered disposal facility is also designed to collect any water that might infiltrate and come in contact with the waste.

  In addition, the waste in its stabilized form has very low leaching potential. The leachate collection tank requires monitoring and periodic removal of collected leachate.

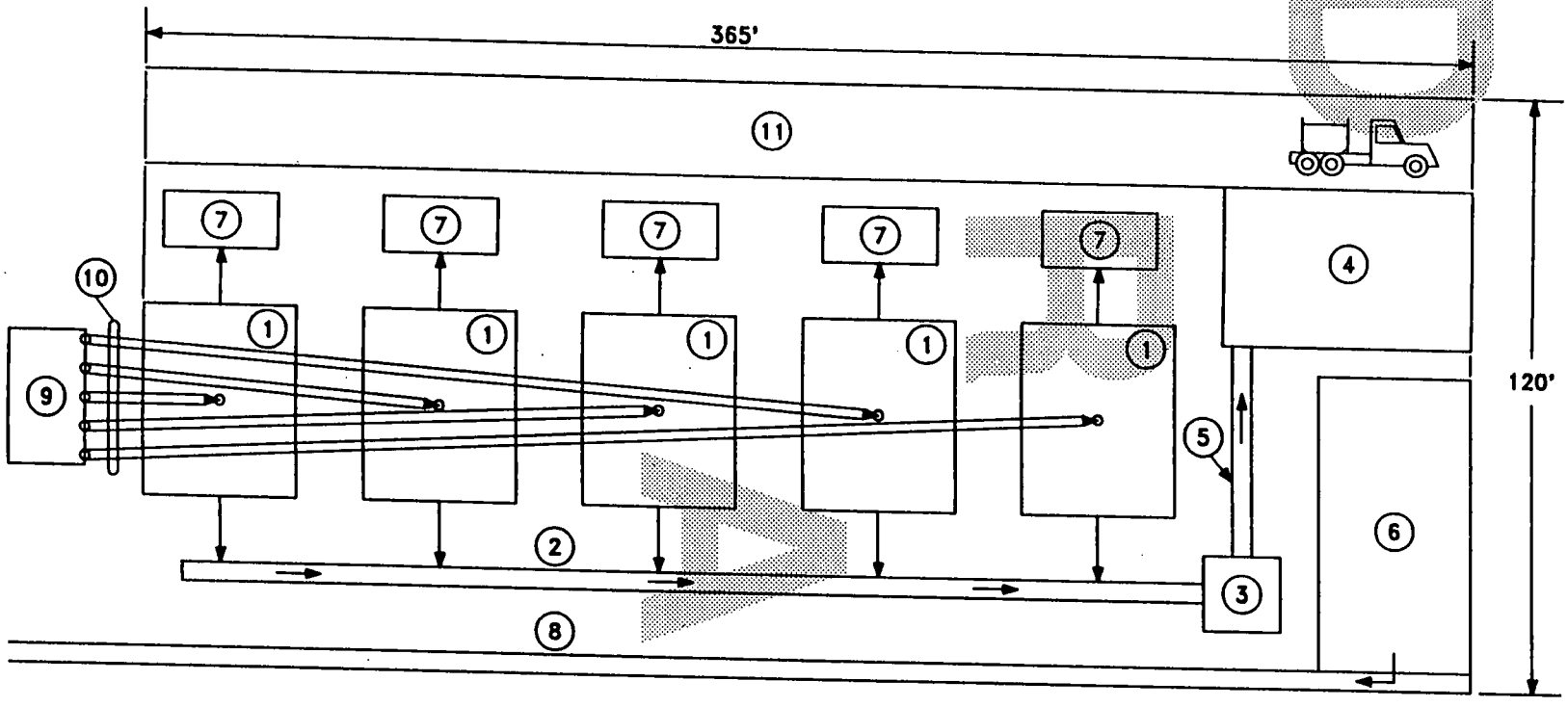

LEGEND:

1. VITRIFIER
2. SUBMERGED (IN WATER) BELT CONVEYOR
3. WATER FILLED FRIT BIN
4. ELEVATED FRIT BIN
5. DEWATERING CONVEYOR
6. SAND & SODA ASH TRANSFER FACILITY
7. OFF-GAS TREATMENT
8. SAND CONVEYOR (BELT) AND SODA ASH CONVEYOR (PNEUMATIC)
9. FEED HOPPER/BIN
10. BELT CONVEYOR
11. ACCESS ROAD

FIGURE 4-11. VITRIFICATION PROCESSING FLOWSHEET – ALTERNATIVES 4B AND 5B

303317-A-G177/OU1-TK15/KNOX

Because this alternative leaves hazardous substances on property, a review will be conducted at least every five years to ensure that the remedy continues to provide adequate protection of human health and the environment in accordance with CERCLA Section 121(c).

- Reduction of toxicity, mobility, or volume through treatment - The waste material is to be vitrified. All waste material, including contaminated pit soils, will be treated. This amounts to an estimated 1 million cubic yards of material.

  Vitrification, supplemented by disposal in the engineered disposal facility, will provide a high level of reduction in mobility.

  Vitrification of the material, followed by disposal in a facility designed to minimize water infiltration, also provides a high level of irreversibility (i.e., low probability of becoming leachate). No untreated residuals will remain.

- Environmental - Impacts will be the same as in Alternative 4A with the additional possibility of gaseous, toxic, and radioactive emissions associated with the vitrification process. The scrubbers for the air treatment system would require a water supply; surface water and groundwater impacts would vary with the amount required.

- Short-term effectiveness - There is an increased probability of an accidental release of uranium, thorium, and radon due to waste removal. Minor amounts of fugitive dust, fumes, and odors are associated with heavy equipment operations during construction of waste treatment, packaging, and disposal facilities and also from transportation of packaged waste to the on-property disposal facility. There are possible impacts on aquatic and terrestrial organisms and habitats, including emergent wetlands, associated with the siting of support and waste disposal facilities. Surface and groundwater impacts vary with the amount of water required for hydraulic removal. Transport of construction materials for the on-property disposal facility could cause community disturbances such as traffic congestion, increased noise, and road degradation. The EIE, waste processing building, and appropriate health and safety measures will ensure protection of the workers. Construction fatalities and injuries are a potential due to high labor hours for the construction of an engineered disposal facility.

  Alternative 4B requires approximately 72 months after the ROD.

  Removal operations will be conducted with appropriate safety measures, thus minimizing worker exposure. Removal, treatment, and packaging operations will be conducted in a controlled environment, thus minimizing the potential for an accidental release of material.

- Implementability - Batch and continuous vitrification technology has been proven on a small scale (approximately 100 cubic yards/day). There are not any units that would be required to achieve the remediation goals of Operable Unit 1 in a timely manner (6 to 20 years).

  Future remedial actions would likely involve the addition of new protective layers and/or modifications to the existing layers of the engineered disposal facility. Such action requires minimum effort and involves only the outer layers of the engineered disposal facility. Monitoring consists of visual inspection, leachate detection, and groundwater sampling. Monitoring wells used for sampling require periodic replacement.

The level of coordination required between agencies is minimal because the material remains on property.

The equipment and associated technical specialists for the proposed remediation effort are not readily available because continuous or batch vitrification has never been performed on a large scale.

The proposed technologies for material removal, treatment, handling, packaging, and storage are readily available, but the solidification technology for large scale continuous or batch vitrification plants has never been proven.

- Cost - The total estimated net capital cost for the vitrification stabilization/on-property disposal alternative is $1.78 billion. The total net present worth long-term O&M, including the cost of the required five-year CERCLA reevaluations, would be as much as $20 million. A detailed cost estimate for the alternative is included in Appendix F.

4.2.5 Alternative 5A - Removal, Waste Treatment (Cement Stabilization), and Off-Site Disposal

4.2.5.1 Description

This alternative is the same as Alternative 4A in all ways except the final disposal of the treated wastes is at an approved off-site disposal facility.

The waste removal technologies, segregation technologies, and on-property treatment and packaging technology options are the same as those for Alternative 4A.

Any water not used for stabilization will be processed by the wastewater treatment plant constructed for use during Operable Unit 1 remediation or a site-wide wastewater treatment plant, if available. The technologies under review for the wastewater treatment plant include:

- Clarification
- Filtration
- Ion exchange
- Reverse osmosis

4.2.5.2 Assessment

- Overall protection of human health and the environment - The potential exposure pathways of direct radiation, radon emissions, groundwater contamination, and soil erosion are eliminated because the waste would be shipped off site to a disposal facility.

- Compliance with ARARs - All ARARs are met.

- Long-term effectiveness and permanence - The residual risk associated with the waste material is eliminated because it will be shipped off site.

- Reduction of toxicity, mobility, or volume through treatment - The treatment process applied to the waste material will be solidification. All waste material in the pits, including contaminated soil, will be treated. This amounts to an estimated 1.2 million cubic yards of material.

  The addition of a stabilizing agent (e.g., cement and fly ash) increases the total volume of treated material by approximately 30 percent to 1.6 million cubic yards.

  Solidification provides a high reduction in the mobility of the waste and a high level of irreversibility (i.e., low probability of becoming leachable). No residual waste would remain on site.

- Environmental - Minor amounts of fugitive dust, fumes, and odors may be associated with heavy equipment operations during construction of the waste treatment and packaging buildings and also from the transport of packaged waste to an off-site disposal facility. Any failure of air or water treatment systems would result in accidental release of contaminants. There would be possible impacts on aquatic and terrestrial organisms and habitats, including emergent wetlands, associated with the siting of support facilities. There would be a short-term loss of grassland habitat on the existing caps due to waste removal. Treatment of standing water would generate contaminated sludges/resins that will have to be disposed of in accordance with standard waste management practices. Rail transport of large volumes of hazardous and radioactive wastes to an off-site disposal facility could cause traffic congestion and increased noise.

- Short-term effectiveness - The EIE and the waste processing building for waste containment ensure protection to the community during the remediation activities.

  There is an increased possibility of an accidental release of uranium, thorium, and radon due to waste removal. Also, minor amounts of fugitive dust, fumes, and odors are associated with heavy equipment operations during construction of the waste treatment and packaging buildings and also from transportation of packaged waste to an off-site disposal facility. There are possible impacts on aquatic and terrestrial organisms and habitats, including emergent wetlands, associated with the siting of support facilities. Surface and groundwater impacts vary with the amount of water required for treatment operations. Transport of hazardous and radioactive waste to an off-site disposal facility could cause community disturbances such as rail congestion and increased noise.

  Risk to the community and railroad workers is associated with the off-site transportation of the waste material. The risk associated with transporting the treated waste to an off-site disposal facility by truck is estimated at 12 fatalities and 108 injuries to the public. Rail transportation risks are 5 fatalities and 16 injuries.

  Remediation requires approximately 72 months after the ROD.

- Implementability - The solidification is proven; however, treatability tests are required. Because the waste will be shipped off site, neither future remediation, nor monitoring on the site is required. This alternative might require state, local, and federal agency approvals for transportation. Extensive coordination among agencies is required at the

state and local levels. All equipment and associated technical specialists are readily available for the proposed remediation effort. The proposed technologies for waste removal, handling, and packaging are readily available.

- Cost - The total estimated worth capital cost for the cement stabilization alternative is $1.8 billion with no long-term O&M cost because the material is off site. A detailed cost estimate for the alternative is included in Appendix F.

4.2.6 Alternative 5B - Removal, Waste Treatment (Vitrification), and Off-Site Disposal

4.2.6.1 Description

Alternative 5B is the same as 5A except for the utilization of vitrification as a process option in lieu of concrete stabilization.

4.2.6.2 Assessment

- Overall protection of human health and the environment - The potential exposure pathways of direct radiation, radon emissions, groundwater contamination, and soil erosion are eliminated because the waste would be shipped off site to a disposal facility.

- Compliance with ARARs - All ARARs are met.

- Long-term effectiveness and permanence - The residual risk associated with the waste material is eliminated because it will be shipped off site.

- Reduction of toxicity, mobility, or volume through treatment - The treatment process applied to the waste material will be vitrification. All waste material in the pits, including contaminated surrounding soil material, will be treated. This amounts to an estimated 1.2 million cubic yards.

  Vitrification provides a high reduction in the mobility of the waste and a high level of irreversibility (i.e., low probability of becoming leachable). No residual waste would remain on site.

- Short-term effectiveness - Impacts will be the same as in Alternative 5A with the additional possibility of gaseous, toxic, and radioactive emissions associated with the vitrification process. The scrubbers for the air treatment system would require a water supply; surface and groundwater impacts would vary with the amount required.

  Removal operations will be conducted with appropriate safety measures, thus minimizing worker exposure.

  There is an increased possibility of an accidental release of uranium and thorium due to waste removal. Also, minor amounts of fugitive dust, fumes, and odors are associated with heavy equipment operations during construction and waste treatment and packaging buildings and also from transportation of packaged waste to an off-site disposal facility. There are possible impacts on aquatic and terrestrial organisms and habitats, including emergent wetlands, associated with the siting of support facilities.

Transport of hazardous and radioactive waste to an off-site disposal facility could cause community disturbances such as railroad congestion and increased noise.

Risk to the community and to railroad workers is associated with the off-site transportation of the waste material. The risk associated with transporting the treated waste to an off-site disposal facility by truck is estimated at 8 fatalities and 71 injuries to the public. Rail transportation risks are 3 fatalities and 11 injuries.

Remediation requires approximately 72 months after the ROD.

- Cost - The total estimated net capital cost for the vitrification alternative is $2.25 billion with no net present worth O&M cost because the material is no longer on property. A detailed cost estimate is included in Appendix F.

4.3 COMPARATIVE ANALYSIS

In the following analysis, the alternatives are evaluated in relation to one another for each of the evaluation criteria: overall protection of human health and the environment; compliance with ARARs; long-term effectiveness; short-term effectiveness; implementability; reduction in toxicity, mobility, or volume through treatment; and cost. State and community acceptance will be addressed in the ROD following comments on the RI/FS report and Proposed Plan. The purpose of this analysis is to identify the relative advantages and disadvantages of each alternative and to rank each in relation to the other alternatives.

The alternatives have been ranked using a modification of the analytical hierarchy process (AHP) developed by Saaty (1980). The alternatives are first evaluated on whether or not they meet the threshold criteria; that is, overall protection of human health and the environment and compliance with ARARs. The alternatives are then carried forward for a comparative evaluation in relation to the five second-tier criteria.

The five second-tier criteria are broken into subcriteria on which a comparative analysis of the alternatives has been performed. Following are the five second-tier criteria and each of their subcriteria.

Long-Term Effectiveness and Permanence

- Magnitude of residual risk
- Adequacy and reliability of controls

DRAFT

Reduction in Toxicity, Mobility, or Volume through Treatment

- Treatment process used and materials treated
- Amount of hazardous materials destroyed or treated
- Degree of expected reduction in toxicity, mobility, or volume
- Degree to which the treatment is irreversible
- Type and quantity of residuals remaining after treatment

Short-Term Effectiveness

- Protection of the community
- Protection of workers
- Environmental impacts
- Time until RAOs are achieved

Implementability

- Ability to construct and operate
- Reliability of the technology
- Ease of undertaking additional remedial action
- Ability to monitor the effectiveness of remedy
- Administrative feasibility
- Availability of services and materials

Cost

- Capital costs
- Operation and maintenance costs
- Present worth costs

4.3.1 Overall Protection of Human Health and the Environment

Alternatives 2, 4A, 4B, 5A, and 5B provide adequate protection of human health and the environment. Alternative 2 provides protection by physical stabilization, and encapsulation of the contaminated material within a slurry wall and cap. Through these stabilization and encapsulation methods, contamination migration would be significantly reduced. Alternatives 4A and 4B achieve protection by removing, treating by stabilization, packaging, and disposing of waste in an on-property disposal facility. The facility would be designed to minimize the migration of material to the environment over the long term. Alternatives 5A and 5B achieve protection using the same technologies as Alternatives 4A and 4B with the exception or transporting the solidified waste to an off-site disposal facility. Alternative 4A differs from 4B in that in 4A cement stabilization is used for stabilization of the waste and in 4B vitrification is used. Likewise, Alternative 5A differs from 5B in that in 5A cement stabilization is used and in 5B vitrification is the stabilization method. Either method is expected to adequately stabilize the waste for disposal.

4.3.2 Compliance with ARARs

Alternatives 2, 4A, 4B, 5A, and 5B meet all ARARs listed in Appendix D. Alternative 2, however, meets all ARARs only because of the assumptions defined in the individual assessment of this alternative provided in Section 4.2 above.

All alternatives are carried through to the second-tier evaluations.

4.3.3 Long-Term Effectiveness and Permanence

The magnitude of residual risk was evaluated qualitatively based on the potential of an alternative to eliminate or reduce exposure pathways and to avoid creating additional exposure pathways. Any remaining potential sources of risk were identified. Also, the necessity of a five-year review was considered.

Alternative 5 is the most preferred alternative and is associated with the least residual risk because the waste is removed, treated, and disposed of off site. Therefore, no waste remains on site and all exposure pathways are eliminated. Alternative 5B is more preferable than 5A because vitrified waste is more stable than cement-stabilized waste. Therefore, leaching of contaminants from vitrified waste is less likely than from cement-stabilized waste. A five-year review is not necessary because the waste is disposed off site.

Alternative 4 is the next preferred alternative because the waste is removed and treated. However, the treated waste is stored in an on-property engineered disposal facility. It is assumed that the engineered disposal facility is built as well as the off-site depository and that various precautions will be incorporated to prevent leaching of contaminants from the treated waste in the engineered disposal facility to the groundwater. Therefore, all long-term exposure pathways will be eliminated. However, a five-year review of the engineered disposal facility and treated waste is required. Alternative 4B is more preferred than 4A because vitrified waste is more stable than cement-stabilized waste. Alternative 2 is the least preferred alternative because it is associated with the highest residual risk. Because the waste remains in place, the possibility of constituents leaching from the pits into groundwater is not eliminated. However, preliminary fate and transport modeling results suggest that leaching is greatly reduced due to the reduction in the infiltration rate, which results from stabilization and capping. Final fate and transport groundwater modeling results will be available in subsequent drafts of this document. The residual risk associated with this alternative

will be evaluated quantitatively in later drafts. A five-year review of leaching from the waste pits into groundwater is required for this alternative.

4.3.4 Reduction of Toxicity, Mobility, or Volume through Treatment

The first subcriteria examined for reduction of toxicity, mobility, or volume through treatment was the treatment process selected and the ability of the process to treat the waste. Of the five alternatives being evaluated, two employ vitrification as treatment (4B and 5B), two employ cement stabilization (4A and 5A), and the fifth employs in situ stabilization using cement and shallow soil mixing and physical stabilization through surcharging (Alternative 2). Based on the ability of each alternative to address the principal threats of the site and on special requirements for the treatment process, Alternative 2 was ranked preferable to Alternatives 4A and 5A. Alternatives 4B and 5B were rated as least preferable. The primary factor in the ranking was the requirement for specialized equipment for implementation. Vitrification (Alternatives 4B and 5B) requires the most specialized and least proven technology. Cement stabilization requires the next largest amount of specialized equipment and the surcharging and SSM of Alternative 2 the least. Each of the alternatives was viewed as addressing the principal threats of the site; therefore, they were rated equal in that category.

The amount of hazardous materials destroyed or treated is evaluated based on what portion, if any, of the waste is treated. Therefore, Alternatives 4B and 5B (vitrification) were rated as the most preferable because all of the waste in both alternatives was treated. Alternatives 4A and 5A were rated as equally effective to each other but less effective than 4B and 5B because cement stabilization does not destroy the waste as is the case with the organics in vitrification. The least effective alternative for treating or destroying the waste is Alternative 2 because only some waste is cement stabilized, and the remaining waste is densified through surcharging. It is also more difficult to verify than the overall effectiveness of in situ stabilization.

The alternatives were compared for their ability to reduce the toxicity, mobility, or volume of waste. Based on this evaluation, Alternatives 4B and 5B are preferred over Alternatives 4A and 5A because Alternatives 4B and 5B reduce toxicity (organics only), mobility, and volume through vitrification. Alternatives 4A and 5A reduce mobility through cement stabilization but do nothing for toxicity and actually increase volume. Alternative 2 ranks below the other alternatives; although it reduces mobility by use of physical stabilization, a cap, and slurry wall, it does not reduce the toxicity. The volume aspects of Alternative 2 would tend to balance out because the SSM of Pits

5 and 6 and the Clearwell would increase the volume, and the surcharging of the remaining pits would decrease the volume.

Each of the alternatives was evaluated to determine the irreversibility of the treatment process. Because vitrification is a more stable and irreversible form than cement stabilized waste, Alternatives 4B and 5B were rated as equally preferable over Alternatives 4A and 5A. Alternative 2 was ranked as the least preferable alternative because the waste that was stabilized by surcharging could be disturbed and the volume increased.

The evaluation of the type and quantity of residuals remaining after treatment is based on; (1) the type of residuals that remain after treatment, (2) their quantities, and (3) the risks they pose. Based on these criteria, Alternatives 4B and 5B (vitrification) are equally preferable over Alternatives 4A and 5A. The vitrified waste will be in a more stable form and in less volume; therefore, they present less risk than the cement stabilized waste. Alternative 2 is the least preferable because less of the waste is treated, the waste is in a less stable form, and the potential for a release and potential risk is greater.

Taking each subcriterion into account, the overall ranking for the reduction of toxicity, mobility, or volume criterion is: Alternatives 4B and 5B (vitrification) are the most preferable, Alternatives 4A and 5A (cement stabilization) are the second most favorable, and Alternative 2 (nonremoval, physical stabilization, slurry wall, and cap) is the least preferable alternative.

4.3.5 Short-Term Effectiveness

Each alternative was evaluated for its ability to protect the community during remedial actions. Based on the evaluation, Alternative 2 (nonremoval, physical stabilization, slurry wall, and cap) was ranked as the most preferable alternative followed by Alternatives 4A, 4B, 5B, and 5A, respectively. Alternative 2 presented the least short-term risk to the community because it was an in situ alternative. Both Alternatives 4 and 5 involved excavation of the waste, which could result in significant releases of fugitive dust if not properly mitigated. The excavation alternatives would also result in more on-property disturbance including construction of either vitrification or cement stabilization plants that would result in increased traffic, noise, and potential accidents. Alternative 5 was also an off-site disposal option that would generate large volumes of rail traffic. Due to the increased volume associated with cement stabilization versus vitrification, Alternative 5A would result in approximately 40 percent more off-site traffic than Alternative 5B. Alternatives 2, 4A, and 4B require caps of comparable design and will require local sources of sand and clay that will

result in increased traffic to the site. However, the traffic associated with the cap construction will not be as great as the traffic required to ship the material off site under Alternatives 5A and 5B.

The evaluation of the protection of workers is based on two major criteria: (1) exposure to workers during remediation, and (2) exposure to accidents. Exposure to workers is evaluated on man-hours in a contaminated area, volume of contaminated waste to be handled, and relative toxicity of the waste. Exposure due to accidents is broken down into industrial accidents based on total man-hours per alternative and potential hazards associated with technology-related accidents. Based on these evaluations, Alternative 2 is the preferred alternative. Alternatives 4A, 4B, 5A, and 5B rank second, third, fourth, and fifth, respectively.

As discussed previously for community protection, worker protection was affected primarily by the difference in excavating the waste (Alternatives 4A, 4B, 5A, 5B) versus nonremoval (Alternative 2). Excavation of the waste not only requires more man-hours of labor but also increases potential for exposure. A distinction was also made between vitrification and cement stabilization. Vitrification was judged slightly more hazardous than stabilization due to dealing with molten materials, high voltage systems, relatively new technology, and fewer skilled workers for the process. Off-site disposal also increased potential accidents due to the large number of rail miles traveled with cement stabilization requiring more rail miles than vitrification because a larger volume of material would be handled.

Environmental impacts were evaluated based on (1) air quality impacts to fugitive dust, fumes, and odors; (2) surface water impacts to wetland areas or Paddys Run and/or potential runoff problems from construction activities; (3) impacts to habitats, threatened and endangered species, and aquatic and terrestrial species; (4) groundwater impacts related to water supply or alteration of flow, or leachate from construction, treatment, or disposal activities; and (5) transportation impacts related to community disturbance, traffic congestion, noise, and/or road degradation from transport of construction materials or waste shipments. Based on the above evaluation, Alternative 5B (removal, vitrification, and off-site disposal) was rated as the preferred alternative. The remaining alternatives were rated in descending order as 5A, 4B, 4A, and 2. The grassland habitat associated with the existing pit area would be disturbed in all five of the alternatives regardless of whether the material was being capped in place or excavated. The two off-site alternatives (5B and 5A) were rated higher than on-site alternatives because they do not require disturbance of large areas for construction of a disposal facility. Vitrification was deemed superior to cement stabilization in both Alternatives 4 and 5 because the larger volumes associated with cement stabilization would require

increased transportation impacts. Alternative 2 was rated the least preferable because implementation would include relocation of Paddys Run. Although Paddys Run is classified as an unvegetated stream channel and not a wetland area, the disturbance of the riparian corridor along the channel would result in habitat destruction for nonaquatic species. Each of the five alternatives will generate fugitive dust from earth work, but Alternatives 4 and 5 would present greater potential for contaminant release. Each alternative will also require storm water control and groundwater treatment.

Environmental Impacts

Alternative 5A was ranked as the most acceptable alternative, with the least environmental impact, because potential impacts would result primarily from accidental releases during remedial activity. Alternative 2 ranked slightly less favorably than Alternative 5A because capping would require the relocation of a segment of Paddys Run and disturbance of emergent wetlands. Alternatives 5B and 4A ranked equally and less favorably than Alternative 2. Ecological impacts associated with the construction of a large on-property waste disposal facility are the primary concern in Alternative 4A; possible contaminant emissions resulting from the malfunction of air or water treatment systems during the vitrification process are the concerns in Alternative 5B. Alternative 4B ranked as the least favorable alternative because it combines both the ecological impacts associated with the construction of the on-property waste disposal facility and potential emissions due to air or water system malfunctions.

The time until RAOs are achieved was evaluated based on the time each alternative requires from start of construction through completion of the remediation effort. Each alternative schedule, from construction through completion of the remediation effort, was developed based on assumed availability of equipment, appropriate construction crew size, process flow rates, past experience, and engineering judgement. The alternatives are ranked with the shortest duration receiving the highest ranking. Therefore, Alternative 2 ranks first, requiring 2 years after the ROD. Alternatives 4A and 5A rank second, requiring 6 years. Alternatives 4B and 5B rank last, requiring 6 years.

Taking each subcriterion into account, the overall ranking for the short-term effectiveness is: Alternative 2 is the most preferable alternative; Alternative 4A is second; Alternative 4B is third; Alternative 5B is fourth; and Alternative 5A is the least preferable alternative.

4.3.6 Implementability

The ability to construct and operate the technology is evaluated based on the amount and types of technical difficulties and uncertainties that could be associated with the construction of each alternative. The evaluation includes factors such as whether a technology is proven or innovative, the scale of application, the ease of construction, and the availability of resources. Based on the ease of construction and operation, Alternative 2 (nonremoval, physical stabilization, slurry wall, and cap) is the preferred alternative. The technology to stabilize the waste and to construct the cap and slurry wall are all proven technologies with proven records of performance. The application of these technologies at the site would require very little modification. The second and third most preferable alternatives are 5A and 4A, respectively. Both alternatives involve cement stabilization of the waste, but 5A, which is off-site disposal, was deemed easier to implement than 4A because of the requirement to construct an on-property disposal facility. Alternatives 5B and 4B were rated the least preferable because of the uncertainties associated with implementation of a large-scale vitrification facility. Vitrification is still unproven at the scale envisioned at the FMPC. Alternative 4B was rated the lowest because it would involve both vitrification and construction of an on-property disposal facility.

Reliability of the technology is evaluated based on the likelihood that technical problems associated with implementation will lead to schedule delays. Based on this evaluation, Alternative 2 is the most preferable with Alternatives 5A, 4A, 5B, and 4B ranked in order of preference. As previously discussed above, the primary factor associated with the order of ranking was the proven history of technologies associated with caps and slurry walls versus the uncertainties of large-scale vitrification. Cement stabilization and on-property or off-site disposal rank in between capping and vitrification in technical reliability. Alternative 2 is a very low technology approach to site remediation involving primarily standard construction equipment whereas cement stabilization and vitrification involve more complex operations. The mechanical components associated with a processing plant are more susceptible to breakdown than earth moving equipment and are more difficult to replace and repair.

The ease of undertaking additional remedial action, if necessary, is evaluated based on what, if any, future remedial actions may be required and how difficult it would be to implement such actions. Based on this evaluation, Alternatives 4B and 5B rank equal as the preferred alternative. Alternatives 4A and 5A are also ranked as equally effective with Alternative 2 being the least preferable alternative. The rankings are based on the assumption that a vitrified waste would be less likely to require additional remediation because it is in a very stable form. The alternatives

were ranked equal because it was assumed that regardless of on-property or off-site disposal, the waste would be equally difficult to retrieve. Alternative 2 was ranked the lowest because it is more likely to require future remediation and it would be more difficult to retrieve the waste. Although Alternative 2 has the same cap as Alternatives 4A and 5A, the waste in 4A and 5A has already been processed and is in a more retrievable form.

The ability to monitor the effectiveness of a remedy is evaluated based on the adequate monitoring of exposure pathways and on the risk of exposure should monitoring fail. Based on these criteria, Alternatives 4B and 5B were rated as most preferable with Alternatives 4A and 5A as the second most preferable. Alternative 2 was rated the least preferable alternative. The two vitrification alternatives (4B, 5B) were rated highest based on vitrified materials representing less of a risk should monitoring fail. It was assumed that either an on-property or off-site disposal facility would be subject to comparable monitoring requirements. The cement stabilization alternatives were ranked second for similar reasons, and the in situ alternative was ranked last due to difficulties in monitoring leachate. The engineered disposal facilities, whether on- or off-site, would have leachate collection/detection systems built in that the in situ alternative would not have.

Administrative feasibility is evaluated based on what coordination and approvals from other agencies are necessary and if they can be obtained. The on-property disposal options of Alternatives 4A, 4B, and 2 were ranked first, second, and third, respectively. The off-site Alternatives 5A and 5B were rated the least preferable. The biggest factor in the administrative feasibility involves on-property versus off-site disposal. The shipment of large amounts of waste off site and probably across numerous state boundaries could result in significant difficulties. Approval from other state and federal agencies (U.S. Department of Transportation [DOT]) could result in significant schedule delays. Vitrification was rated lower for both on-property and off-site alternatives because large power demands could require negotiations with local utilities. Alternative 2 was rated the lowest on-site alternative because it involves relocation of Paddys Run and possible approval from the COE.

Availability of services and materials is evaluated based on: (1) the availability of off-site disposal facilities, (2) availability of necessary equipment, specialists, services, and materials, and (3) if the technologies are generally available or need further development. Using these ranking criteria, Alternative 2 was ranked as the most preferable alternative. Alternatives 4A and 4B were second, and Alternatives 5A and 5B were the least preferable. Alternative 2 requires no additional disposal areas, has readily available equipment, and uses proven technology. Currently, there is no off-site

facility that will accept the waste; therefore, the off-site alternatives rank below all three on-site options. Even if off-site facilities were available, public opposition to transporting such large quantities across state boundaries and through local communities is a potential problem.

Taking each subcriterion into account the overall ranking for implementability is: Alternative 2 is the most preferable, Alternative 4B is second, Alternative 4A is third, Alternative 5B is fourth, and Alternative 5A is the least preferable.

4.3.7 Cost

The capital cost evaluation is based on the construction, equipment, buildings, services, and disposal costs required for each alternative. The alternatives are ranked with the lowest cost receiving the highest ranking. Therefore, Alternative 2 ranks first with a cost of $139 million. Alternative 4A ranks second with a cost of $1.22 billion. Alternative 4B ranks third with a cost of $1.78 billion. Alternative 5A ranks fourth with a cost of $1.80 billion, and Alternative 5B ranks last at $2.25 billion.

The total present worth of long operation and maintenance evaluation is based on the postconstruction costs necessary to ensure the continued effectiveness of a remedial action. Again, the alternatives are ranked with the lowest cost receiving the highest ranking. Therefore, Alternatives 5A and 5B rank best with no long-term O&M because the waste is no longer on site. Alternatives 4A and 4B rank next with $20 million each. Alternative 2 ranks third with $66 million. Alternative 0 had a long-term O&M cost of $9 million.

The total cost of each alternative is a combination of the capital and O&M costs. The alternatives are ranked with the lowest cost receiving the highest ranking. Therefore, Alternative 2 ranks best with a cost of $205 million. Alternative 4A ranks second with a cost of $1.24 billion. Alternatives 4B and 5A rank third with costs of $1.80 billion. Alternative 5B ranks last with a cost of $2.25 billion. Figure 4-12 shows the relationship of the costs of each alternative to the others.

4.4 OVERALL SUMMARY OF THE DETAILED ANALYSIS OF ALTERNATIVES

Those alternatives for the waste pits, the Burn Pit, and the Clearwell, which had been carried past the initial screening stage, were subjected to the detailed analysis study. Each was evaluated against the two threshold and five balancing criteria.

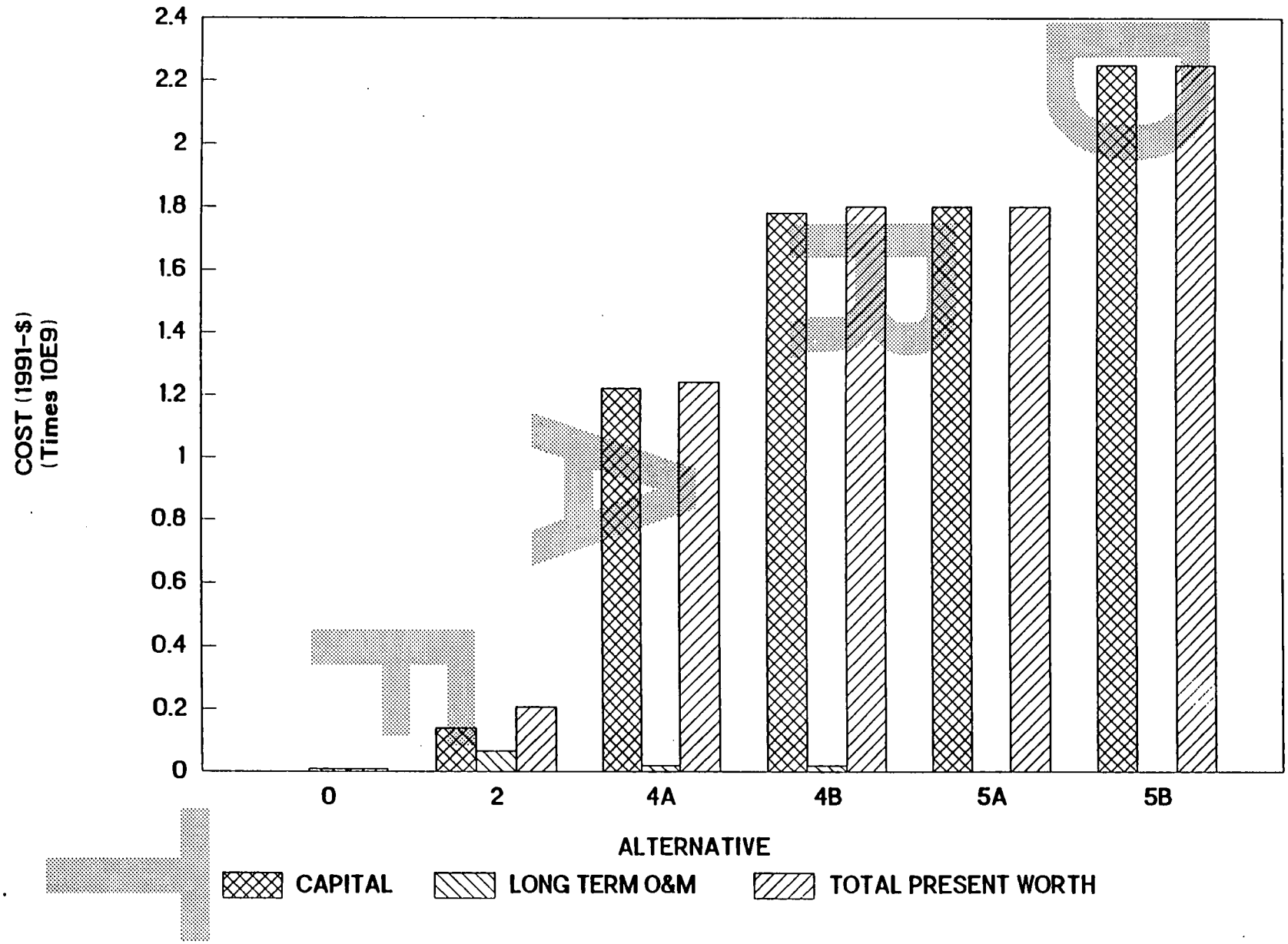

FIGURE 4-12. COSTS FOR ALTERNATIVES

FL/FMPC-0115-2/4-12

Alternatives 1 and 3 were dropped in the initial screening stage. Alternatives 2, 4A, 4B, 5A, and 5B met both the requirement for the protection of human health and the environment and the ARARs. From these alternatives, the preferred alternative will be chosen.

A summary of the degree of compliance or divergence with the threshold and balancing criteria is found in Table 4-1. This table represents the state of the FS for Operable Unit 1. Table 4-2 shows the rankings of each alternative with respect to the criteria.

Additional data may require future modifications before the RI/FS process is complete. Specific unresolved items that are needed to properly conclude the RI/FS include:

- Waste pit, Burn Pit, and Clearwell sampling
- Treatability studies of waste material
- Chemical, radiological, and geotechnical analysis of waste material

The next step in the RI/FS process is the final selection of the preferred alternative by the EPA, which will ultimately be implemented by the ROD.

DRAFT

TABLE 4-1

INDIVIDUAL ANALYSIS OF FINAL ALTERNATIVES

Criteria	Alternative 0 No Action	Alternative 2 In Situ Stabilization, Slurry Wall Cap	Alternative 4A Removal, Cement Stabilization, On-Site Disposal	Alternative 4B Removal, Vitrification, On-Site Disposal	Alternative 5A Removal, Cement Stabilization, Off-Site Disposal	Alternative 5B Removal, Vitrification, Off-Site Disposal
OVERALL PROTECTIVENESS	No significant reduction in risk. Does not meet RAOs for radiation and chemical exposure.	Stabilization minimizes radiation and chemical exposure and migration of contaminants to groundwater. Meets RAOs.	Human health is protected because all waste is removed and treated. Meets RAOs.	Human health is protected because all waste is removed and treated. Meets RAOs.	Human health is protected because all waste is removed and treated. Meets RAOs.	Human health is protected because all waste is removed and treated. Meets RAOs.
ENVIRONMENTAL PROTECTION	No improvement in environmental protection.	Contamination is contained by stabilization and capping. Meets RAOs.	Environmental protection is provided because all waste is removed and treated. Meets RAOs. Assumes tumulus is not built on wetland.	Environmental protection is provided because all waste is removed and treated. Meets RAOs. Assumes tumulus is not built on wetland.	Environmental protection is provided because all waste is removed and treated. Meets RAOs.	Environmental protection is provided because all waste is removed and treated. Meets RAOs.
COMPLIANCE WITH ARARs	May not meet 40CFR141.11, 15, and 16 chemicals and radionuclides in drinking water.	Meets all ARARs if assumptions in Section 4A are met.	Meets all ARARs if assumptions in Section 4A are met.	Meets all ARARs if assumptions in Section 4A are met.	Meets all ARARs.	Meets all ARARs.
LONG-TERM EFFECTIVENESS AND PERMANENCE						
- Magnitude of residual risk	Source has not been removed or treated. Existing risk will remain.	Waste is stabilized. Risk is reduced as long as the cap is maintained. Waste remains in place.	Residual risk greatly reduced by removal and treatment.	Residual risk greatly reduced by removal and treatment.	Residual risk eliminated due to off-site disposal.	Residual risk eliminated due to off-site disposal.
- Adequacy and reliability of controls	No additional controls over remaining contamination. No reliability.	Reliability of cap can be high if maintained. Site access must be controlled.	Reliability of tumulus is high but must be maintained.	Reliability of tumulus is high but must be maintained.	No controls required. Treated waste disposed of off site.	No controls required. Treated waste disposed of off site.
- Need for 5-year review	Review would be required to ensure that adequate protection of human health and the environment is maintained.	Review would be required to ensure that adequate protection of human health and the environment is maintained. Waste remains in place.	Review required for treated waste in tumulus.	Review required for treated waste in tumulus.	Not required. Treated waste disposed of off site.	Not required. Treated waste disposed of off site.

TABLE 4-1
(Continued)

Criteria	Alternative 0 No Action	Alternative 2 In Situ Stabilization, Slurry Wall Cap	Alternative 4A Removal, Cement Stabilization, On-Site Disposal	Alternative 4B Removal, Vitrification, On-Site Disposal	Alternative 5A Removal, Cement Stabilization, Off-Site Disposal	Alternative 5B Removal, Vitrification, Off-Site Disposal
REDUCTION IN TOXICITY, MOBILITY, OR VOLUME THROUGH TREATMENT						
- Treatment process used	None.	In situ stabilization, on-site disposal.	Removal, cement stabilization on-site disposal.	Removal, vitrification, on-site disposal.	Removal, cement stabilization, off-site disposal.	Removal, vitrification, off-site disposal.
- Amount destroyed or treated	None.	Majority of waste is stabilized.	All wastes are removed and treated.	All wastes are removed and treated.	All wastes are removed and treated.	All wastes are removed and treated.
- Reduction in toxicity, mobility, or volume	None.	Mobility would be reduced through stabilization and capping.	Mobility of all wastes would be greatly reduced by cement stabilization and disposal in on-site tumulus.	Mobility of all wastes would be greatly reduced by vitrification and disposal in on-site tumulus.	Mobility of all wastes would be greatly reduced by cement stabilization and off-site disposal.	Mobility of all wastes would be greatly reduced by vitrification and off-site disposal.
- Irreversible treatment	None	Reversibility of stabilization would be low as as long as the cap is maintained.	Reversibility of stabilization would be very low.	Reversibility of stabilization would be very low.	Totally irreversible due to treated waste disposed of off site.	Totally irreversible due to treated waste disposed of off site.
- Type and quantity of residuals remaining after treatment	No treatment. All material would remain in place.	Treatment of all waste cannot be ensured.	No untreated residuals would remain on site.	No untreated residuals would remain on site.	No untreated residuals would remain on site.	No untreated residuals would remain on site.
- Statutory preference for treatment	Does not satisfy.	Satisfies.	Satisfies.	Satisfies.	Satisfies.	Satisfies.
SHORT-TERM EFFECTIVENESS						
- Community protection	Risk to community not increased by remedy implementation, but existing exposure pathways would be unchanged.	Minimal effect on community expected.	Minimal effect on community expected.	Minimal effect on community expected.	Minimal effect on community expected.	Minimal effect on community expected.

6438

000271

TABLE 4-1
(Continued)

Criteria	Alternative 0 No Action	Alternative 2 In Situ Stabilization, Slurry Wall Cap	Alternative 4A Removal, Cement Stabilization, On-Site Disposal	Alternative 4B Removal, Vitrification, On-Site Disposal	Alternative 5A Removal, Cement Stabilization, Off-Site Disposal	Alternative 5B Removal, Vitrification, Off-Site Disposal
- Worker protection	No significant risk to workers.	General industrial health and ALARA practices would be used.	General industrial health and ALARA practices would be used.	General industrial health and ALARA practices would be used.	General industrial health and ALARA practices would be used.	General industrial health and ALARA practices would be used.
- Environmental impacts	Continued impacts from existing conditions.	Short-term impacts due to relocation of Paddys Run and cap surcharging.	Possible short-term impacts from siting and construction of tumulus (Assumes tumulus not built on wetland).	Possible short-term impacts from siting and construction of tumulus (Assumes tumulus not built on wetland).	Small impacts due to transportation.	Small impacts due to transportation.
- Time until action is complete	Not applicable.	Remedial action complete in 64 months from ROD; volume of waste reduced by surcharging.	Remedial action complete in 72 months.	Remedial action complete in 72 months.	Remedial action complete in 72 months from ROD.	Remedial action complete in 72 months from ROD.
IMPLEMENTABILITY						
- Ability to construct and operate	No construction or operation.	Shallow soil mixing, surcharging, slurry walls, and capping are proven technologies; easy to construct and operate.	Removal, stabilization, and on-site disposal technologies are proven and easy to construct and operate.	Removal and on-site disposal technologies are proven and easy to construct and operate. Vitrification is not proven technology for large-scale treatment facility.	Removal, stabilization, and on-site transportation technologies are proven and easy to construct and operate.	Removal and off-site transportation technologies are proven and easy to construct and operate. Vitrification is not a proven technology for large-scale treatment facility.
- Ease of doing more action if needed	If monitoring indicated more action would be necessary, may need to go through the FS/ROD process again.	Adding new layers to the cap would require minimal effort.	Adding new layers to tumulus would require minimal effort.	Adding new layers to tumulus would require minimal effort.	Treated waste off-site. No further action needed.	Treated waste off site. No further action needed.
- Ability to monitor effectiveness	Proposed monitoring would give notice of increased contamination.	Proposed monitoring would give notice of failure before significant exposure occurs.	Proposed monitoring would give notice of failure before significant exposure occurs.	Proposed monitoring would give notice of failure before significant exposure occurs.	All waste off site. No monitoring required.	All waste off site. No monitoring required.

001172

6438

TABLE 4-1
(Continued)

Criteria	Alternative 0 No Action	Alternative 2 In Situ Stabilization, Slurry Wall Cap	Alternative 4A Removal, Cement Stabilization, On-Site Disposal	Alternative 4B Removal, Vitrification, On-Site Disposal	Alternative 5A Removal, Cement Stabilization, Off-Site Disposal	Alternative 5B Removal, Vitrification, Off-Site Disposal
- Ability to obtain approvals approvals and coordinate with other agencies	No approvals necessary.	No approvals necessary.	No approvals necessary.	No approvals necessary.	State, local, and federal agencies approval required for transportation. However, presently no off-site depository is permitted to accept waste.	State, local, and federal agencies approval required for transportation. However, presently no off-site depository is permitted to accept waste.
- Availability of services and capacities	None required.	Readily available.	Readily available	Readily available.	Readily available.	Readily available.
- Availability of equipment, specialists, and materials	None required.	Readily available.	Readily available.	Readily available.	Readily available.	Readily available.
- Availability of technologies	None required.	Readily available.	Readily available.	Readily available.	Readily available.	Readily available.
· COST						
- Capital Cost (in millions)	$0	$0	$139	$1,220	$1,780	$2,250
- O&M cost including 5-year restudy (present worth in millions)	$9	$66	$20	$20	$0	$0

TABLE 4-2.
COMPARATIVE ANALYSIS SUMMARY

	Alt 0	Alt 1*	Alt 2	Alt 3*	Alt 4A	Alt 4B	Alt 5A	Alt 5B
Primary Evaluation Criteria								
Protection of Human Health and Environment	Fails	-	Meets	-	Meets	Meets	Meets	Meets
ARARs	Fails	-	Meets	-	Meets	Meets	Meets	Meets
Second Tier Evaluation Criteria								
Long-Term Effectiveness	-	-	5	-	4	3	2	1
Reduction in Toxicity, Mobility and Volume through Treatment	-	-	5	-	4	2	3	1
Short-Term Effectiveness	-	-	1	-	2	3	5	4
Implementability	-	-	1	-	3	2	5	4
Cost	-	-	1	-	2	4	5	3

* These alternatives deleted during initial screening due to implementability concerns.
Rankings for Second Tier Criteria are most preferred (1) to least preferred (5).

BIBLIOGRAPHY

Advanced Sciences, Inc. 1986, "Remedial Investigation of the Feed Materials Production Center, Fernald, Ohio, Part I: Evaluation of Current Situation," prepared for Westinghouse Materials Company of Ohio, Cincinnati, OH.

Bechtel National Inc., 1990, "Study and Evaluation of K-65 Silos for the Feed Materials Production Center," prepared for the U.S. Department of Energy, Oak Ridge Operations Office, Oak Ridge, TN.

U.S. Department of Energy, Office of Scientific and Technical Information, April 1986, "Final Environmental Impact Statement: Long-Term Management of the Existing Radioactive Wastes and Residues at the Niagara Falls Storage Site," DOE/EIS-0109F, U.S. DOE, Washington, D.C.

U.S. Environmental Protection Agency, 1986, "Consent Agreement under CERCLA Section 120 and 106(a)," Docket No. V-W-'90-C-057, Region V, prepared for U.S. Department of Energy Feed Materials Production Center, Fernald, OH.

U.S. Environmental Protection Agency, October 1988, "Guidance for Conducting Remedial Investigations and Feasibility Studies Under CERCLA," Office of Emergency and Remedial Response, EPA, Washington, D.C. OSWER Directive 9355.3-01.

U.S. Nuclear Regulatory Commission, May 1983, "Technical Position on Waste Form," Low-Level Waste Licensing Branch, Division of Waste Management, Washington, D.C.

Weston, Roy F., 1987, "Characterization Investigation Study Volume 2: Chemical and Radiological Analyses of the Waste Storage Pits," prepared for Westinghouse Materials Company of Ohio, Cincinnati, OH.

Weston, Roy F., March 1988, "Geotechnical Evaluation of Feed Properties of Waste Pit Materials at the Feed Materials Production Center, Fernald, Ohio," prepared for Westinghouse Materials Company of Ohio, Cincinnati, OH.

Verification of the Hydrologic Evaluation of Landfill Performance (HELP) Model Using Field Data, U.S. Army Engineer Waterways Experiment Station, Vicksburg, MS.

DRAFT

APPENDIX
A

DRAFT

APPENDIX A

DESCRIPTION OF TECHNOLOGIES AND PROCESS OPTIONS

A.1.0 DESCRIPTION OF TECHNOLOGIES AND PROCESS OPTIONS

A.1 INTRODUCTION

The following description of potentially applicable technologies and process options is presented in alphabetical order.

A.1.1 Capping (Infiltration Capping)

The capping specified for this alternative is a multiple-layer design that minimizes the vertical infiltration of storm water through the Operable Unit 1 area. Because of extended service life requirements, no synthetic materials such as flexible membrane liners (FML) or geotextiles may be incorporated into the design except to facilitate construction.

Before cap construction, clean fill soils will be placed and contoured to provide long-term cap support and to minimize any potential future settlement problems. The multiple-layer cap design will consist of the following elements:

- Clay layer

  A four-foot minimum thickness, compacted clay layer with a verified 1 X 10^{-7} cm/s permeability will be placed over the fill soils. Because FMLs are excluded from the design, the proposed clay layer is 24 inches thicker than that specified under Title 40 of the Code of Federal Regulations (CFR) 264. This additional thickness will provide greater long-term resistance to stress-induced cracking and potential vegetative root attack, thereby minimizing the possibility of water migration through the clay layer. Caps must also meet the requirements set forth in 40CFR61 Subpart Q, and 40CFR192 for control of radon through the clay layer. The cap must be constructed with enough errosion resistance to provide reasonable assurance of containment of radioactive waste and radon for 1000 years.

- Drainage layer

  A two-foot-thick drainage layer with a 1 X 10^{-3} cm/s minimum permeability will be placed over the clay and consist of two 1-foot-thick layers. The upper layer will be a graded natural aggregate filter protecting the lower drainage layer from clogging. Although more costly to procure and install than the typical Resource Conservation and Recovery Act (RCRA) geotextile filter fabric, the all-natural drainage layer will alleviate concerns over long-term material durability, as well as improving the overall drainage layer performance including:

  - Reducing the hydraulic driving forces acting on the clay layer by more timely removal of water percolating through the vegetative cover

  - Balancing the moisture content of vegetative and clay layers against seasonal extremes, including drought

- Providing an intrusion barrier to protect the clay layer against deep-rooted plants and burrowing animals

- Vegetative

The two-foot-thick vegetative layer placed over the drainage layer shall be composed of common clean soils with the upper three-inch thickness capable of supporting a hardy, persistent growth, shallow-rooted (zero root density at 12 inches deep) grass crop.

The vegetative layer protects the clay layer against environmental abrasion including desiccation, freeze/thaw damage, erosion, and hydraulic-induced-stresses caused by standing or ponding water. The vegetation on the surface should be maintained to preclude old field succession.

All cap layers will be contoured to grades that promote drainage while minimizing the effects of waste subsidence and storm water erosion. In addition, based on the extremely long half-lives of various radionuclides present in the waste, 10CFR40 Appendix A will be used in determining cap thickness.

Present non-RCRA regulatory criteria, such as 10CFR61.7(b)(5), and engineering practices require designs that minimize both maintenance and storm water infiltration, as well as providing structural longevity for intrusion barrier purposes in excess of 500 years.

A.1.2 Clarification

Clarification is also known as sedimentation and involves the separation of suspended solids from a liquid by gravity. It has no effect on the dissolved solids.

Clarification can either be used as a pretreatment technique to remove organic or inorganic contaminants before downstream processing or as a final polishing step to produce a high quality effluent suitable for direct discharge. Solids separation is usually enhanced by flocculation. Clarification can be performed in large tanks or pits (preferably with a sloped bottom) or in package equipment supplied by vendors.

Clarification will not reduce the hazards associated with the solids, but it will reduce their volume. The sludge and wastewater produced by clarification will probably have to be treated further. No adverse environmental effects would be expected from this process. Clarification is a common process that can be included in the wastewater treatment system. In fact, some clarification of the wastewater in pits and lagoons has probably already occurred.

A.1.3 Dynamic Compaction

Dynamic compaction involves dropping 5- to 40-ton weights from heights of 20 to 100 feet, resulting in compaction of surface and subsurface soils. A large-capacity crane repeatedly lifts and releases the weight at one location before moving on to the next location.

This technology has been proven very effective in treating all types of soils, even at 60-foot depths, and has been shown to be extremely cost-effective. The technique will generate various depth craters dependent on the subsurface conditions. To minimize the potential of contaminate release into the surface environment, a thick soil blanket (approximately four or five feet) is placed over the treatment area. The following support activities would be required before the start of any compaction effort:

- Carry out studies to confirm the technology's abilities
- Remove and treat free-standing water
- Evaluate and implement groundwater control measures

After treatment, the soil blanket will be contoured and a RCRA-type cap constructed. Groundwater control measures will be installed to make each dynamically compacted area an environmentally secure and permanent waste disposal unit.

A.1.4 Filtration

Filtration is a method for separating solids from a liquid. The stream to be filtered passes through a media that allows the liquid to pass through while trapping the solids.

Filtration is commonly used in water treatment plants for solids removal. It can be performed in pressure filters, vacuum filters, gravity filters, bag filters, or cartridge filters. Pressure filtration is typically used for dewatering sludges and reducing transportation and disposal costs. The feed to the pressure filter may have to be conditioned and thickened with inorganic chemicals. Bag and cartridge filters are typically used to provide additional treatment to affluent water before final discharge. Filtration typically produces filter cakes that contain 20 to 50 percent solids.

Filtration usually provides a better separation of solids from water compared to clarification. Filtration will not reduce the hazard associated with the insoluble wastewater constituents, but it will reduce their volume. The filter cake can be treated with the other sludges. The wastewater may have to be treated further.

There are no environmental concerns associated with filtration except the disposal of any hazardous sludge generated. Filtration is a commonly used unit operation and can be cost-effective.

Filtration is a solids/liquid separation operation that may be used as part of the waste treatment process. Filtration is unlikely to be a cost-effective volume reduction technique for the semisolid sludges, but it may be used to remove low levels of solids from wastewater or to reduce the volume of sludges produced by clarification processes.

A.1.5 Flocculation

Flocculation is the coagulation of small colloidal suspended solids into larger particles to allow relatively easier separation from the wastewater.

Flocculation is primarily a physical process and will help remove only the suspended solids and will not affect the dissolved solids. Typically, chemicals such as alum, ferric chloride, and high molecular weight polymeric compounds are added to help agglomerate the particles. More than one flocculent is normally used for removing inorganics in conjunction with neutralization/precipitation and clarification/filtration. Typically, laboratory-scale bench settling tests are required to select type and dosage of flocculent.

Flocculation could be a part of a system to remove the suspended solids from wastewater. Flocculation will not reduce the hazard associated with the solids, but it will facilitate their subsequent treatment and disposal. The wastewater may have to be treated further before discharge. The sludge could be processed with the other sludges for disposal. Significant adverse environmental impacts should not result from this process if the flocculent is properly handled and stored. Flocculation costs are usually relatively low. However, depending on the type and/or dosage of flocculent used, the costs can be high.

A.1.6 Hydraulic Removal/Dredging

Hydraulic removal/dredging uses properly selected and designed pumps, with material dislodging mechanisms, drivers, suction and discharge line, all included in a site-specific, self-contained package.

Hydraulic removal/dredging is generally limited to excavating slurries containing 10 to 20 percent solids by weight. It offers flexibility in pumping the slurry/sediment a considerable distance (several thousand feet) to a designated treatment/storage area.

By combining the capabilities of plain suction, cutterhead, and portable dredges, a site-specific pretested hybrid unit can be ordered to pump a slurry with a larger percentage of solids. Similar units have been built in the past and have a dredging depth capacity of 10 to 50 feet.

This dredging method cannot be used for the removal of 55-gallon drums or other similar, nonsludge wastes. Therefore, mechanical removal methods would be employed to complete waste removal by excavation. Hydraulic dredging is appropriate for Pits 5 and 6 and the Clearwell because of the standing water. Its use on other pits would require the addition of large quantities of water after the cover material has been mechanically removed.

A.1.7 Ion Exchange

Ion exchange is a process in which certain dissolved ions are removed from water by exchanging them with other (counter) ions held by an insoluble solid (resin). Ion exchange resins are typically polymer beads that have been modified by the addition of chemical groups which attract various ionic species. The resins can be regenerated for reuse with a strong solution of the exchangeable counter ion. Resin types range from general purpose demineralization resins that remove nearly all salts to selective chelating resins that have high affinities for specific ions.

Ion exchange is used extensively for water and wastewater treatment. It is used also for treatment of a variety of industrial wastes to allow for the recovery of materials or by-products. Additionally, ion exchange has been used in waste treatment for removal and recovery of radioactive materials from contaminated streams. It is usually used to remove low levels of ionic species (generally between 100 and 500 ppm) and is not cost-effective at higher concentrations. Treatment of water with ion exchange can achieve very low effluent concentrations of contaminants.

Ion exchange may be used as a final treatment to remove trace metals and radionuclides from dilute wastewater. The resins may be used once and disposed of or they may be regenerated, which will produce a concentrated waste stream for treatment and disposal; the concentrated regenerate may be treated with the sludge. Ion exchange is an easily implemented, reliable, commercial technology. Treatment cost is moderately expensive and will depend on the type of resin employed and the quantity of the various ionic species removed from the wastewater.

DRAFT

A.1.8 Mechanical Removal

- Backhoe - A backhoe is normally used for trenching and for other subsurface excavation where the excavator remains near the original working level. Backhoes are mechanically or hydraulically operated in a drag and hoist maneuver and are usually crawler-mounted. The lateral and vertical reach of a backhoe is limited by the length of the boom. Conventional backhoes are capable of digging to a depth of approximately 40 feet. Deeper digging depths (up to 80 feet) are achieved by using modified backhoes with extended booms, modified engines, and counterweights.

  Backhoes have limited lateral and vertical reaches that can be improved by using an extended reach and depth machine. They are capable of excavating almost any type of material.

  Material transport and support equipment are required for a successful operation.

- Clamshell - A clamshell (or grab bucket) is a crane-operated mechanical removal device that could be crawler-mounted for this application. A clamshell is normally used for a reach/depth of up to 100 feet. Production rates for clamshells are relatively low, typically in the range of 20 to 30 cycles per hour, and vary with depth, working media, and swing angle. Clamshell buckets range in capacity from 1 to 12 cubic yards. A large-capacity, specially designed bucket could be used for this application. The bucket could be designed so that the probability of losing material during hoisting would be reduced to a minimum.

  Clamshell dredging can excavate any type of material (except highly consolidated sediments and solid rock). The excavation is done at nearly in situ densities. Clamshell dredges can be operated in confined areas, and by using a long boom, operator exposure can be minimized. Major problems are low production, potential of losing material during hoisting operation, and high energy/operational costs. Material transport and support equipment are required for a successful operation.

- Front-End Loader - A front-end loader is a tractor with a bucket for digging, lifting, hauling, and dumping materials. Front-end loaders are generally equipped with a hydraulically controlled bucket lift and can be either crawler- or rubber-tire-mounted. The front-end loaders' buckets vary in capacity and design.

  Crawler-mounted loaders can be good excavators and used to carry material as far as 300 feet. Medium-sized crawler-loaders typically have maximum bucket capacities of 5 to 6 cubic yards. Rubber-tire-mounted loaders for high production operations on stable surfaces have bucket capacities up to 20 cubic yards. Usually front-end loaders are used in combination with excavation equipment like backhoes.

- Dragline - A dragline is similar to a clamshell and is also a crane-operated device that would be crawler-mounted for this application. The primary difference is that a dragline bucket is loaded by being pulled across the material, whereas the clamshell is dropped into the material and hoisted vertically. A dragline can be used to excavate many types of materials.

  The dragline has a longer reach than a clamshell and better horizontal control. It has a greater potential of hoisting material and may require a specially designed bucket.

A.1.9 On-Property Disposal Facility

An on-site tumulus or aboveground waste disposal facility could be constructed for the disposal of the waste material. The proposed tumulus disposal concept basically consists of mounding over waste that has been placed on a stable structural pad. The aboveground structure is a reinforced vault-like concrete structure designed for permanent waste disposal. Both the tumulus and the aboveground structure will accept only dry waste placed in noncorrosive containers and/or highly stabilized/solidified waste forms. The following design(s) are being considered:

- Tumulus Design (Figure A-1)
  - RCRA-type closure cap with leachate collection/detection systems (LC/DS) and roller-compacted concrete intrusion barrier
  - Cap thickness, including fill cover over the waste forms, will be based on the five-meter criterion per 10CFR61.
  - Low permeability (1 X 10^{-7} cm/s, maximum) multiple clay liner underlayment with LC/DS
- Aboveground Structure
  - Designs 1A and 1B - The vault is constructed directly on grade (Figure A-2)
    - (a) Design 1A with a liner system including LC/DS
    - (b) Design 1B is without the secondary leachate collection system or the HPDE liner (only a primary leachage collection system).
    - (c) A RCRA-type cap can be placed over the closed structure
  - Designs 2A and 2B - The vault is constructed with the structural support slab placed six feet over grade using an extended height reinforced concrete foundation (Figure A-3).
    - (a) Design 2A with a liner system including LC/DS
    - (b) Design 2B is without the secondary leachate collection system or the HPDE liner (only a primary leachate collection system)
    - (c) A RCRA-type cap can be placed over the closed structure

As a condition of placement, no untreated (wet, raw) waste or free liquids will be accepted for disposal in any on-property disposal facility. After treatment the resulting waste form may be placed in bulk and/or containerized as follows:

- Dry (having a moisture content less than 15 percent by dry weight basis) placed in a noncorrosive, structurally adequate container
- Pumpable, self-leveling, setable grout/waste mix; this grout/waste mix will be termed "waste crete"

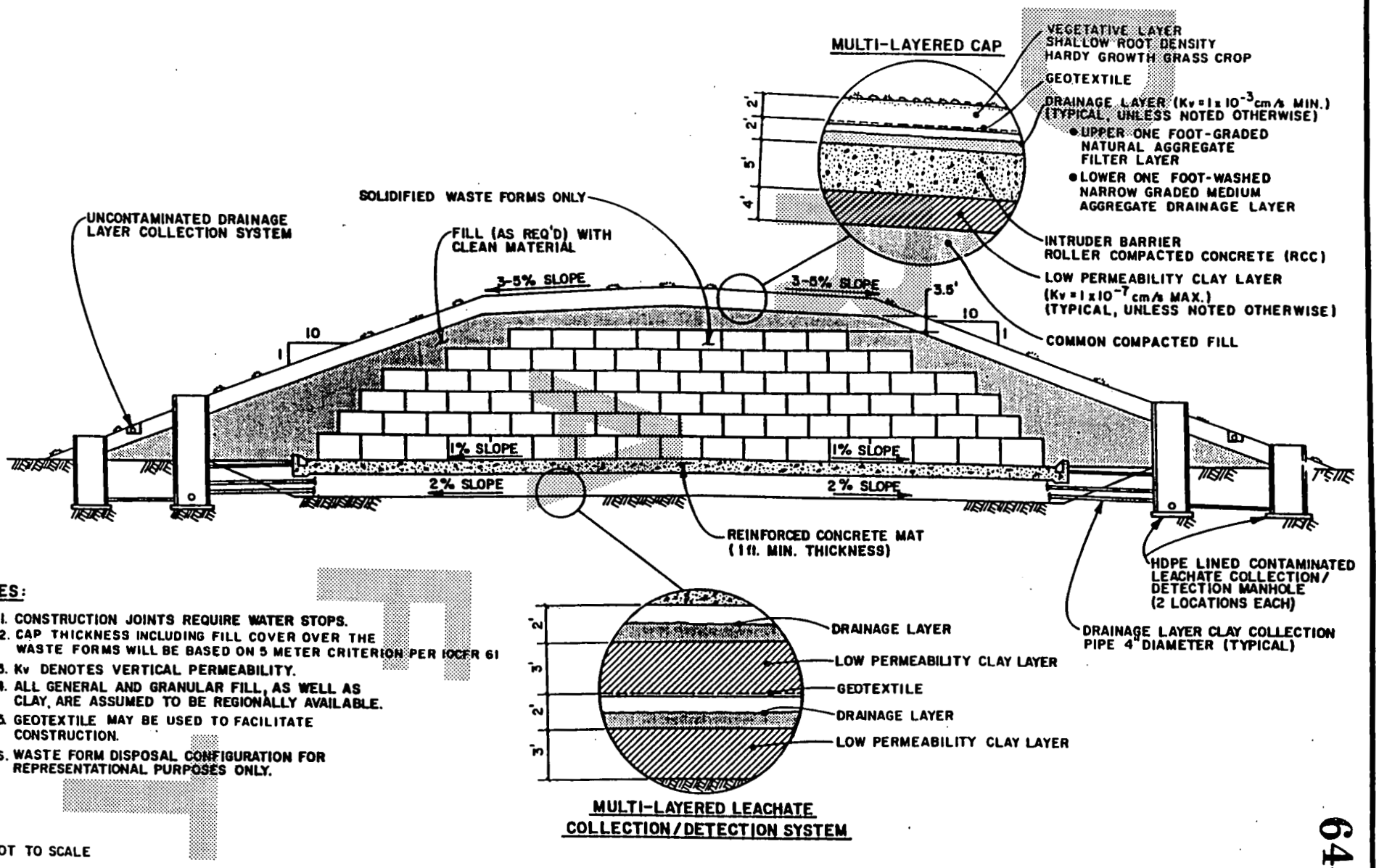

FIGURE A-1. TUMULUS SECTION

303317-A-G161/OU1-TK15/KNOX

000184

6438

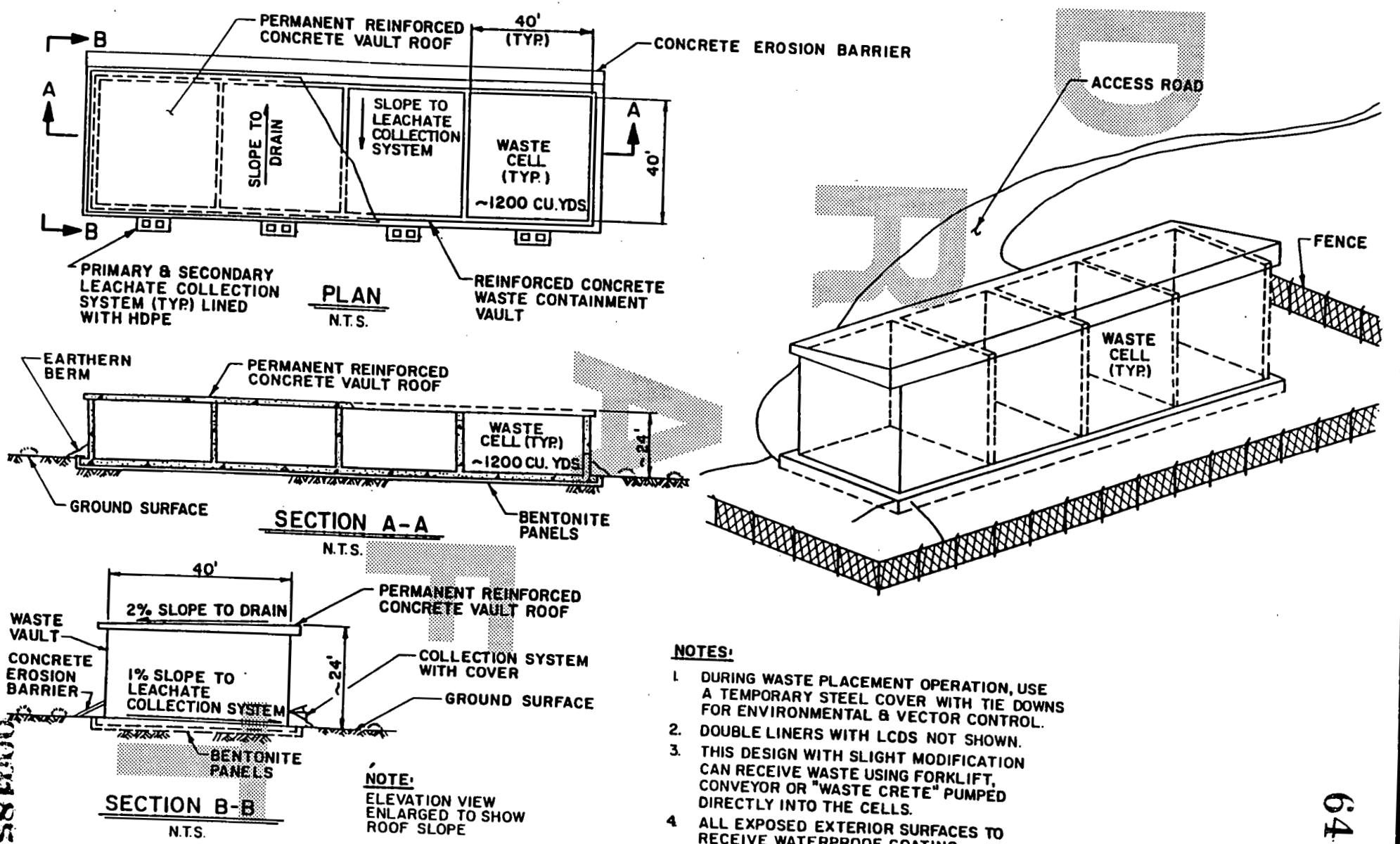

FIGURE A–2. GREATER CONFINEMENT DISPOSAL VAULT FACILITY (GCD)

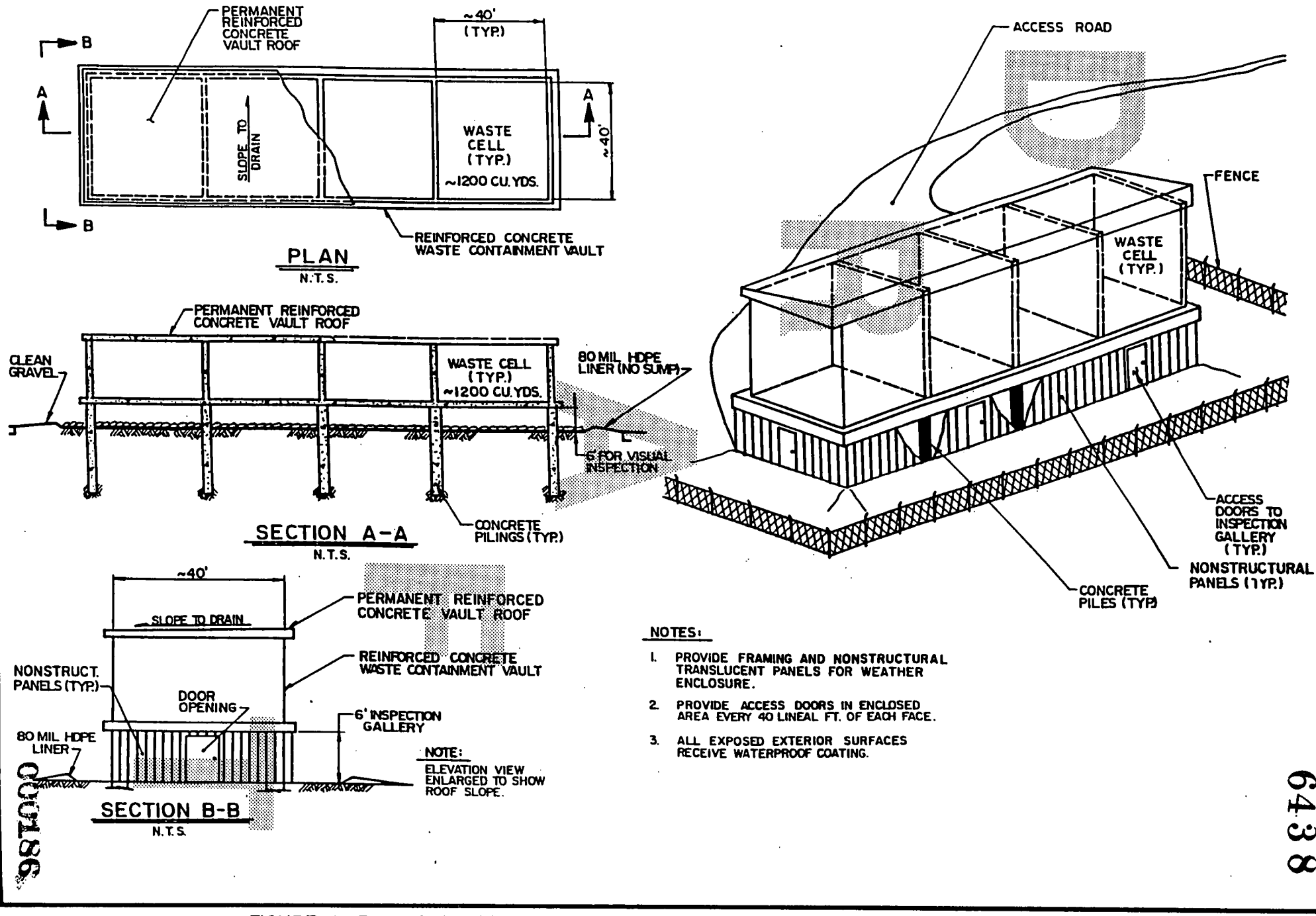

FIGURE A-3. GCD WITH STRUCTURAL SLAB AND VAULT PLACED ABOVE GRADE

As with all on-property disposal technologies, a properly designed site, as well as regularly scheduled monitoring and facility maintenance programs will be required in perpetuity.

A.1.10 Packaging/Transportation

Shipment of wastes off site must meet the U.S. Department of Transportation's (DOT) stringent packaging requirements for radioactive materials. DOT in 49CFR provides a number of general categories under which radioactive material may be shipped. Within the possible shipping designations allowed in the DOT regulations, there are four which apply to the waste pits (with certain restrictions):

- Limited quantities
- Low specific activity (LSA) material
- Type A package quantities
- Type B package quantities

Under each of these categories, the Operable Unit 1 residues will be specified as "normal form" because they have not been tested to meet the requirements of 49CFR173.469.

A.1.10.1 Limited Quantities

The term "limited quantities" of radioactive material is a designation for shipping the least restricted articles and the smallest quantities of radioactive material. Generally, items such as radioactive watches, clocks, and smoke detectors are shipped under this category. Although the waste pit residues could be made to conform to the restrictions of this classification, it would not be practical. This classification places a restriction on the activity level allowed in each shipping container and because of the assumed concentrations of thorium-230 found in the wastes, it would require an inordinate number of packages to ship the wastes. The logistics of taking inventory and accounting for this number of packages alone renders this shipping classification unsuitable for the shipping of the pit wastes.

A.1.10.2 Low Specific Activity

The advantage to shipping radioactive material as low specific activity (LSA) is to gain exemptions from using specification packaging (i.e., Type A, Type B, etc.). Whereas the other packaging and shipping classifications place a limit on the curie content of a package, the LSA classification places a limit on the specific activity of the contents of each package.

Pit waste will have to meet the restrictions of 49CFR173.403(n)(4) which states: "Material in which the radioactivity is essentially uniformly distributed and in which the average concentration of the contents do not exceed:

(i) 0.0001 millicurie per gram of radionuclides for which the A_2 quantity is not more than 0.05 curie
(ii) 0.005 millicurie per gram of radionuclides for which the A_2 quantity is more than 0.05 curie, but not more than 1 curie
(iii) 0.3 millicurie per gram of radionuclides for which the A_2 quantity is more than 1 curie."

Note: "A_2" is the maximum activity of radioactive material, other than special form or low specific activity radioactive material, permitted in a Type A package.

In order to apply this definition it must be noted that 49CFR173.433(b)(3) states that "In the case of a mixture of different radionuclides, where the identity and activity of each radionuclide is known, the permissible activity of each radionuclide R_1, R_2, ...R_n must be such that $F_1 + F_2 + ... + F_n$ is not greater than unity, when:

$$F_1 = \frac{\text{Total activity of } R_1}{A_i(R_1)}$$

$$F_2 = \frac{\text{Total activity of } R_2}{A_i(R_2)}$$

$$F_n = \frac{\text{Total activity of } R_n}{A_i(R_n)}$$

where $A_i(R_1, R_2,...R_n)$ is the value of A_1 or A_2 as appropriate for nuclide R_1, R_2,...R_n."

Note: "A_1" is the maximum activity of special form radioactive material permitted in a Type A package.

What all of the foregoing means for Operable Unit 1 is that the radionuclides in the decay chain present in the pits will have to be divided into three categories: those with an A_2 value equal to or less than 0.05 curies, those with an A_2 value greater than 0.05 but not more than 1 curie, and those with an A_2 value greater than 1 curie. Then, using the above formula, the maximum activity concentrations may be calculated to determine packaging requirements.

A.1.10.3 Type A Quantities

The pit residues can be shipped in Type A packaging that requires the activity level in each package not to exceed the A_2 value for the radionuclide of concern. 49CFR173.412 lists the design and performance specifications for Type A packaging. Type A packages are designed to more stringent requirements than LSA packages and are typically used for the packaging of materials with greater levels of radioactivity. Type A containers are generally more expensive than LSA containers.

Because of the activity levels of the pit residues and the package activity level restrictions for Type A packages the wastes would require an inordinate number of packages. As in the Limited Quantities discussion, the logistics for storing and accounting for a large quantity of packages would be prohibitive.

A.1.10.4 Type B Quantities

Type B packaging is required for all wastes that exceed Type A packaging requirements. 10CFR71.51 lists the design and performance requirements for Type B packages. Type B packaging is constructed to much higher standards than either Type A or LSA packaging and is therefore much more expensive.

Generally, shipments of Type B quantities are made in a primary disposable container that is placed in a Type B overpack for transportation purposes only. The main advantages to Type B shipments are the use of larger packaging and reduction of risk during shipment because of the higher grade packaging. The main disadvantages are cost, increased number of truck trips, and use of Type B overpacks.

A.1.11 Reverse Osmosis

Reverse osmosis (RO) involves diffusion of water through a semipermeable membrane with applied pressure. It is a separation process that can retain particles (including dissolved species) as small as 1 to 10 Angstroms.

Historically, RO has been associated with removal of salts and inorganic compounds from brackish water. Unlike water, salts and other contaminants cannot pass through the semipermeable membrane and are concentrated. The degree of concentration depends on the pressures on the membrane. Membranes can foul, thus reducing treatment rate. This situation happens if the

solubility limit of any of the salt species in wastewater is exceeded; chemical reagents known as sequestrants can be added to reduce this effect.

RO might be used to concentrate the salts in the wastewater. Calcium sulfate fouling can be a problem in treating most of the FMPC wastewaters. RO will not reduce the hazards associated with the salts but will facilitate their subsequent treatment and disposal. Adverse environmental effects should not result from this process. RO can be implemented with commercially available process equipment; costs are moderate compared to other wastewater treatment processes.

A.1.12 Shallow Soil Mixing

Shallow soil mixing (SSM) is a method of mixing soils or sludges with dry or fluid treatment chemicals to produce a solidified or stabilized end product. SSM is designed to provide in situ mixing of ponds, pits, and lagoons to a depth of 30 feet or more using a crane-mounted mixing system. The mixing head is enclosed in a bottom-opened cylinder that allows a closed system for the mixing of waste and treatment chemicals. As the mixing head blades pass in an up-and-down motion through the waste, a negative pressure is maintained on the cylinder headspace to pull any vapors or dust to an air treatment system.

Characterization Investigation Study (CIS) data indicated Pits 5 and 6 and the Clearwell exclusively contain sludges from plant production and/or site surface soil sediments, whereas Pits 1 through 4 and the Burn Pit contain large quantities of drums, construction rubble, and miscellaneous site debris. Therefore, SSM, as a stabilization technology, will be applicable only to Pits 5 and 6 and the Clearwell.

The SSM system has the advantages of a negative head pressure, treatment of any off-gases and/or dust, waste treatment by stabilization chemicals that can be correctly proportioned during mixing operations, and operable to mixing depths of 30 feet or more. Therefore, SSM shall be retained as a viable technology for in situ waste stabilization in Pits 5 and 6 and the Clearwell.

A.1.13 Sludge Treatment Options (Sludge Processing By In Situ Vitrification)

Most of the sludges to be treated are composed of lime and soils, with contamination by radioactive and nonradioactive metals as well as some organics. The materials in some of the pits and ponds do not have sufficient load-bearing capacity to support the equipment that is to be used during in situ treatment. The first step for in situ treatment, therefore, is to prepare an adequate

surface over which equipment may be moved. This is done using various surface stabilization methods that include vibratory settling, sand or cement addition, and compaction.

In situ vitrification involves adding sand to sludges, placing electrodes into the pit, and then electrically heating the sand/sludge mixture to form a glass-like monolith. This glass has low leachability and will not allow the migration of contaminants from the pit. A hood is placed over the pit during this process to collect off-gas generated by the heating.

Off-gas generated during in situ vitrification is treated by an air pollution control device such as a scrubber. The scrubber will generate a contaminated wastewater stream that must be treated before discharge. Treatment of this water will be done using one of the water treatment strategies described in other process options. Wastewater treatment could be done using a portable unit to remediate a single sludge pit. It could also be done at a centralized facility designed to handle a wide variety of wastewaters from remedial actions at various locations around the facility.

The vitrified wastes can be left in place. They will be highly resistant to leaching and have the best long-term stability of any waste form. The vitrified waste can be capped with clay or soil for aesthetic purposes.

A.1.14 Sludge Treatment Options (Sludge Removal, Drying, and/or Vitrification)

Sludges will be removed from the sites using one of the techniques described in the "sludge removal" technologies and will be delivered to a sludge treatment facility. For sludges containing low levels of organics, the necessary treatment should prevent leachate formation and/or contaminant migration at the disposal site. This will be accomplished by sludge drying or vitrification. Some sludges may be disposed after sludge drying alone, whereas others may require further treatment by vitrification.

The sludge-drying process includes dewatering in a filter press or centrifuge. Wastewater from this process will be discharged to one of the wastewater treatment systems installed at the facility. Dewatered sludge will then be dried further using a thermal dryer. This unit uses heat to evaporate water until the sludge is in a dry solid form. Sludges containing organics must be processed with off-gas collection and treatment systems.

If vitrification is necessary, the dried sludge could be placed in typical glass melting equipment or a reactor with sand and fluxing agents and heated with electrodes. The sludge is melted and

contaminants bound into a glass-like substance that prevents leaching out of the material. The vitrification process generates off-gas that requires treatment by a unit such as a scrubber. The scrubber will generate a wastewater stream that will be sent to a wastewater treatment system. Alternatively, the waste could be placed in an engineered mound and vitrified using in situ techniques.

A.1.15 Sludge Treatment Options (Solics/Liquid Separation, Stabilization, and/or Drying)

Organic-free sludges may be treated by several treatment scenarios involving solid/liquid separation, drying, and stabilization. Solid/liquid separation will be done when it is cost-effective to remove liquid from the sludge before further treatment. Some sludges may be sent directly to stabilization if their water content is similar to that needed in the stabilization mixture. Solid/liquid separation will be done before sludge drying, unless the sludge to be treated does not contain enough water to allow it to be effective.

Sludge-drying involves heating the sludge to evaporate water and forming a powder out of the sludge. Dried sludge can be sent to stabilization or directly to disposal. Potential fugitive dust emissions must be controlled during this process.

Stabilization is accomplished by adding fly ash, cement, asphalt, or other stabilizing materials to the sludge. Stabilized wastes will then be sent to disposal.

A.1.16 Sludge Treatment Options For Organic Contamination (Solid/Liquid Separation, Thernal Desorption, and Stabilization)

Sludges containing organics require treatment in systems that control fugitive emissions of organics as well as provide treatment for metals. This will be done by first using solid/liquid separation, removing organics and residual water in a thermal desorber, and then stabilizing the dried sludge, if needed. Solid/liquid separation may be done on a filter press or centrifuge and generates a wastewater stream for treatment.

Thermal desorption uses an indirectly fired kiln or other equipment to heat the sludges to a temperature that drives off organics and water. The vapor from the desorber requires treatment in a unit such as a fume incinerator. Off-gas from the incinerator may require further treatment using a scrubber system for particulate and chloride removal depending on the organics present. Scrubber blowdown water is then sent to a wastewater treatment unit.

Dry sludge from the thermal desorber may be disposed of directly or may require stabilization before disposal. Stabilization involves the addition of fly ash, concrete, asphalt, etc., to form an agglomerate that will prevent leaching of the solid. Potential fugitive dust emissions must be controlled during this process.

A.1.17 Soil-Benzonite Slurry Walls (Vertical Containment Barrier)

Slurry walls are the most commonly used subsurface barriers. Slurry walls are constructed in a vertical trench that is excavated under a slurry. The slurry (which is usually a mixture of bentonite and water) assists in shoring the trench to prevent collapse and forms a filter cake on the trench walls that prevents fluid loss to surrounding ground.

Backfilling, performed with soil materials mixed with a bentonite and water slurry, results in this type of slurry wall. There is a work area requirement for on-site slurry preparation to be effective;. this work area should be located adjacent to the slurry wall installation site.

For slurry walls to be effective it is necessary to use them in conjunction with a suitable cap. The slurry wall should extend to the least permeable underlying layer and go to a predetermined design depth below the bottom of the waste. A detailed predesign investigation characterizing the subsurface conditions and materials is required. Permeabilities of the subsurface layer (to which the slurry wall extends) and the soil-bentonite wall itself are critical elements in the design. The issue of waste/wall compatibility should be addressed early in the design by permeability testing of the proposed backfill mixture with actual site leachate or groundwater. Based on the investigation results, suitable design and support activities can be recommended.

Slurry walls can also be placed upgradient from the waste and can divert groundwater away from waste thus minimizing leachate production.

A.1.18 Solidificaiton and Stabilization of Radioactive Materials

Radioactive waste forms are defined as Class A, Class B, and Class C per 10CFR61.55. Solidification process applies to Class A. Stabilization process is applicable to Class A, B, and C. Solidified Class A waste products are free-standing monoliths and have no more than 0.50 percent of the waste volume as free liquids. Stabilized Class B and C wastes must meet American Society for Testing and Materials (ASTM) standards for compressive strength, exposure to radiation fields, biodegradation, and leaching as stated in the U.S. Nuclear Regulatory Commission (NRC) Technical Position on Waste Form.

Although there is a difference between solidification and stabilization, this discussion will treat them the same. Solidification may be necessary for preparation for disposal to reduce liquid volumes to acceptable levels and to provide structural integrity to prevent slumping, subsidence, and collapse or other failure when disposed. A number of different solidification agents are available including portland cement, limestone, fly ash, gypsum, absorbents, resins, and polymers. Laboratory testing will be required to determine the proper solidification formula.

A.1.19 Surcharging (Overburdening)

This technology typically induces densification and subsidence in incompetent soils by mounding or overburdening the area of treatment with large fill soil quantities for a long period of time. After the compaction goal is achieved, the soil overburden may be removed and discarded or used for surcharging another area (termed "rotating surcharge technique").

This technology is one of the simplest and least expensive methods for large area treatment. This method can be used most effectively in free-draining soils but can be readily applied to fine-grained and cohesive soils by installation of sand drains, collection trenches and sumps, or wick drains to decrease the waste consolidation time.

If drains are installed, they will provide a pathway for contaminated pore water to the fill surface. Pore water would then be collected and treated, which could potentially expose workers to contamination.

If the drains are not used, the surcharge would force the contaminated pore water into the surrounding soil and confining basin subsoils leading to a possible slight rise in monitored contaminants for a short period of time. In either case, the surcharge would produce an adequately compacted waste/soil matrix for closure-cap-bearing purposes.

Before the start of any full-scale stabilization efforts, the following support activities would be required:

- Field and/or laboratory studies to confirm the chosen technology's abilities
- Removal of any free-standing water from the treatment area
- Evaluation and implementation of temporary and permanent groundwater control measures

- Temporary wellpoints or withdrawal wells outside the treatment areas during construction
- Slurry wall technology
- Upgradient groundwater interceptor ditches and drains
- Combinations of the above

After treatment, the surcharge would be removed to design-specified elevations, and a RCRA-type cap constructed in conjunction with required groundwater control measures to provide an environmentally secure permanent waste disposal unit.

A.1.20 Vacuum Extraction

This technology, consisting of ejector wells, wellpoints, and suction wells, has been used for dewatering lagoons in large-scale operations where the volume of sludge or sediment would require an inordinately large number of mechanical dewatering units such as filters and centrifuges.

This technology's essential features are:

- Wellpoints - An array of wellpoint screens, three to five feet apart, are placed into the waste and joined to a common header pipe leading to a vacuum pump. Wellpoints typically have 1.5- to 3.5-inch-diameter well screens and are capable of up to 35 gallons per minute in granular soils.
- Suction Wells - May be defined as large wellpoints up to eight inches in diameter with capacity greater than 35 gpm in granular soil.
- Ejector Wells - May be either single-pipe or two-pipe component systems with the single-pipe ejector wells most commonly used. For technology utilization purposes, the evaluation will be limited to the single-pipe system. The ejector pump system consists of a water tank, pump, required valves, and piping. In the single-pipe model, supply water flows downward between the well casing and the inner ejector return pipe, and a packer assembly separates the supply water from the groundwater so that different pressures are developed. Return pipe flow is a mixture of supply water and groundwater that recharges the system water tank. Excess tank water is removed for treatment, while the balance of the water is recycled for groundwater withdrawal.

A.1.21 Vertical Drains

This technology provides pore water pressure relief to facilitate the natural consolidation process in fine-grained soils. Sand drains are vertical columns filled with sand extending through the soil treatment zone. They are placed on a closely spaced pattern. Wick drains are strips of material that are pushed into the full depth of the soil treatment zone. They are also placed on a closely

spaced pattern. Each wick is composed of a grooved or studded flat core sandwiched by a single-ply filter fabric on either side. In the last 10 years, wick drains have become the technology of choice in lieu of sand drains. Therefore, only wick drains will be assessed.

Special installation equipment inserts the wick to the desired depth. The wick provides a pathway for contaminated water to reach the surface for collection and treatment.

The drains can be used more effectively if incorporated into other settlement technologies.

Wick drains are inexpensive to install and have been used on projects in all parts of the world.

Because of the method of installation and collection of free pore water, there may be a potential of environmental and worker contamination. Before the start of any full-scale stabilization efforts, the following support activities would be required:

- Carry out studies to confirm the technology's abilities
- Remove and treat free-standing water
- Install a protective soil layer over any exposed waste to provide a safe working platform for equipment and personnel
- Evaluate and implement groundwater control measures

After treatment, wick drains can be left in place. A RCRA-type cap will be constructed in conjunction with groundwater control measures to provide an environmentally secure and permanent disposal unit.

A.1.22 Vitrification

Vitrification converts contaminated solids into a glass (amorphous) and crystalline mineral matrix that has mechanical and chemical durability properties similar to granite. Vitrification, at melting temperatures between 1100° and 1600°C, will destroy organics and fix metals into the non-leachable solidified melt. In vitrification the waste mixture must have sufficient mineral content to form the glassy/crystalline matrix. If the waste is low in silica or alumina compounds, they may be added in the form of sand or soil.

Glass melting equipment (both continuous and batch) and in situ techniques can be used to vitrify wastes. Conventional equipment, including "cold cap" and "drop tube electro" melters, have been studied for vitrifying radioactive waste. Batch (in can) melting of radioactive waste has been

studied. A stirred tank melter has also been proposed but not extensively studied. Gas-fired melters are not appropriate because of air pollutant emission control requirements.

The cold cap, drop tube, and stirred tank melters would be fed a mix of waste, sand, and fluxing agents and would produce a glass melt to be "pulled" off. This melt could be cast as blocks or frit and would resemble bottle glass. This product could be entombed or buried as required for final disposal.

For in situ vitrification (ISV) the contaminated waste is not excavated but is vitrified in place. The energy required to heat and melt the waste is supplied by applying electric current to electrodes buried in the waste. Because the molten waste is conductive, it is heated by its own resistance (joule heating). For this process to be cost-effective, the depth of contamination must be at least six feet. Large sites can be treated by successive vitrification of adjacent blocks or zones. Another modified in situ approach that may have a wider application is placing the contaminated waste from a site in a pit or an aboveground mound and then vitrifying it. This allows mixing with other wastes and addition of sand or soil to improve the melting characteristics.

Any vitrification process will produce off-gas containing steam, products from combustion of any organics, and some particulates. Some metals may be volatilized but these emissions should be lower than with other thermal techniques. This off-gas from any vitrification process must be collected and treated.

A.1.23 Waste Segregation (Waste Pits, Clearwell, Burn Pit)

Waste segregation is a process that separates and isolates the different components making up a waste stream. Waste segregation as applied at FMPC will be accomplished by using the differences in physical characteristics within the waste streams.

Waste segregation would be used on Operable Unit 1 to separate the metallic material, wood, and other debris from the other wastes in each pit. Review of the CIS data indicates drums and other metal materials were buried in the pits. Wood pallets and other debris are also reported to have been buried in the pits. Magnetic surveys were taken to identify metallic objects in the pit areas. This step was taken so test borings could take place without disturbing the metals. Wood fragments were encountered in some of the test borings indicating wood materials had been buried. Technologies for waste segregation include magnetic, eddy current separating, manual sorting, and screening/sizing:

- Magnetic

  This method would further identify areas of ferrous materials within the pits. As cover material is removed, visual inspection could be made to determine the type of material present and the best method for handling and sorting. When removing cover materials, care will be taken to avoid puncturing drums or other containers. Recovered drums or containers will be isolated and sampled to determine RCRA constituents and radioactivity.

- Eddy Current Separator

  This method uses eddy currents to force nonferrous metals from a feed stream. The advantages of this methodology are:

  - High separation capacity
  - Not affected by ferrous metals in the feedstream
  - Low energy requirements
  - Increases in efficiency as metallic size increases

- Manual Sorting

  This method involves the "hands-on" separation of the different physical types of waste material. As metals or other types of debris different from the majority waste forms are encountered it would be evaluated and removed by the safest method. Special cleaning and decontamination procedures will be necessary for large debris before its disposal.

- Screening/Sizing

  This method involves the physical separation of materials by a series of screens sized to retain particles of a desired size range while allowing smaller particles and liquid to pass through the screen surface. This method will separate materials by size only. The screen can be either moving or fixed. The more widely used moving screens can be vibrating, revolving, or gyrating; with vibrating being the most common and most efficient. Fixed screens are usually inclined and used for separating larger materials.

A.1.24 Waste Disposal Off Site

After treatment, the FMPC waste can be transported to an approved waste disposal facility for permanent disposal. As a condition of disposal, no untreated wet, raw waste, or free liquids will be accepted for transport. Bulk and/or containerized wastes may be transported as follows:

- Dry (having a moisture content less than 15 percent by dry waste weight)
- Pumpable, self-leveling, setable grout/waste mix; this grout/waste mix will be termed "waste-crete"

An additional requirement may be that the waste be characterized as either mixed or low-level radioactive waste. If identified as mixed waste, it will only be accepted in a solidified form.

Waste transport may be provided by truck or railroad. While radioactive waste from FMPC is currently shipped to a western site, the availability and limitations of other approved waste sites must be considered in the period of time when waste will actually be available for shipment.

The FMPC can readily accommodate rail transport by use of existing on-property track spurs. Rail transport offers many advantages over trucking, including:

- Low cost per waste ton/mile transported
- Transport safety
- Ability to haul large tonnages at one time, which could possibly lessen the potential public exposure

A possibility exists that the approved waste site may not have an available rail spur. However, a spur could be built.

Truck transport can provide portal-to-portal service with the road system available between FMPC and the approved waste site. Dependent on whether the waste is containerized, bulk/dry cake, or solidified, the number of run trips (each 30 tons one way) could range from 1500 to 5000. The main disadvantage of truck transport is the near-FMPC public roadways. These two-lane rural roads are heavily traveled with considerable uncontrolled cross traffic and regional access/egress commuter traffic.

Rail transport with the existing system can provide an estimated shipment rate of 90 tons of waste per car with 100 cars per train. The number of haul runs could range from 350 to 550.

A major consideration for any disposal technology may be the resistance from local groups. While considerable local opposition should be expected, the mass transportation required to implement off-site disposal could be challenged in numerous local political jurisdictions along the transport route, creating unacceptable site cleanup delays.

DRAFT

APPENDIX
B

DRAFT

APPENDIX B

PUBLIC HEALTH AND OCCUPATIONAL RISK CONSIDERATION FOR THE OPERABLE UNIT 1 FEASIBILITY STUDY AT THE FEED MATERIALS PRODUCTION CENTER

APPENDIX B
TABLE OF CONTENTS

	Page
B.1.0 Introduction	B-1-1
B.2.0 Summary of Baseline Risk Assessment	B-2-1
B.2.1 Radionuclides and Chemicals of Concern	B-2-1
B.2.2 Exposure Pathways	B-2-1
B.2.3 Human Risk Characterization	B-2-2
B.2.3.1 Carcinogenic Risk	B-2-2
B.2.3.2 Noncarcinogenic Risk	B-2-3
B.2.4 Exposure to Environmental Receptors	B-2-4
B.2.5 Uncertainties	B-2-5
B.2.6 Conclusions	B-2-5
B.3.0 Feasibility Study Risk Considerations	B-3-1
B.3.1 Methodology	B-3-1
B.3.1.1 Direct Radiation	B-3-1
B.3.1.2 Airborne Radon	B-3-2
B.3.1.3 Groundwater	B-3-2
B.3.1.4 Occupational Construction Risks	B-3-3
B.3.1.5 Transportation Risks	B-3-3
B.3.1.6 Volatilization	B-3-4
B.3.2 Long-Term Effectiveness	B-3-4
B.3.2.1 Direct Radiation	B-3-4
B.3.2.2 Airborne Emissions	B-3-8
B.3.2.2.1 Radon	B-3-8
B.3.2.2.2 Fugitive Dust	B-3-8
B.3.2.3 Groundwater	B-3-8
B.3.3 Short-Term Effectiveness	B-3-10
B.3.3.1 Protection to Community During Remedial Actions	B-3-10
B.3.3.1.1 Direct Radiation	B-3-10
B.3.3.1.2 Airborne Radon and Particulates	B-3-10
B.3.3.1.3 Transportation Risks	B-3-10
B.3.3.2 Protection to Workers During Remedial Actions	B-3-13
B.3.3.2.1 Direct Radiation	B-3-13
B.3.3.2.2 Airborne Radon	B-3-17
B.3.3.2.3 Fugitive Dust	B-3-18

DRAFT

APPENDIX B
TABLE OF CONTENTS
(Continued)

		Page
B.3.3.2.4	Volatilization	B-3-19
B.3.3.2.5	Construction Risks	B-3-19
B.3.3.2.6	Transportation Risks	B-3-19
References		B-R-1

DRAFT

LIST OF TABLES

Table	Title	Page
B.3-1	Parameters Used to Calculate Transportation Risks	B-3-5
B.3-2	Potential for Long-Term Human Exposures Related to Remediation of the Waste Storage Pits at the Feed Materials Production Center	B-3-7
B.3-3	Estimated Long-Term Airborne Radon Fluence Rates from Operable Unit 1	B-3-9
B.3-4	Potential for Short-Term Human Exposures During Remediation of the Waste Storage Pits at the Feed Materials Production Center	B-3-11
B.3-5	Predicted Public Transportation Fatalities and Injuries Associated with Remediation of Operable Unit 1	B-3-12
B.3-6	Average Reported Activities of Radionuclides in the Waste Pits	B-3-14
B.3-7	Estimated Short-Term Radiological Exposure During Remediation to Workers of the Waste Storage Pits	B-3-15
B.3-8	Air Concentrations of Volatile Organic Compounds During Excavation of the Waste Storage Pits Compared to Permissible Exposure Limits	B-3-20
B.3-9	Construction Risks Associated with Remediation of Operable Unit 1	B-3-22
B.3-10	Occupational Transportation Fatalities and Injuries Associated with Remediation of Operable Unit 1	B-3-23

DRAFT

LIST OF FIGURES

Figure	Title	Page
B.3.1	Geometry Used to Estimate Direct Gamma Radiation Exposures to Receptor Located Above Waste	B-3-16

DRAFT

LIST OF ACRONYMS

ALARA	as low as reasonably achievable
DOT	U.S. Department of Transportation
EIE	environmental isolation enclosure
EIS	environmental impact statement
EP	Extraction Procedure
EPA	Environmental Protection Agency
FMPC	Feed Materials Production Center
FS	feasibility study
HI	Hazard Index
NEPA	National Environmental Policy Act
NRC	Nuclear Regulatory Commission
OSHA	Occupational Safety and Health Administration
PEL	permissible exposure limits
RAO	remedial action objective
RfD	reference dose
RME	reasonable maximally exposed
WLM	working level month

DRAFT

APPENDIX B

PUBLIC HEALTH AND OCCUPATIONAL RISK CONSIDERATION FOR THE OPERABLE UNIT 1 FEASIBILITY STUDY AT THE FEED MATERIALS PRODUCTION CENTER

B.1.0 INTRODUCTION

This appendix provides support to the remedial alternative selection process for Operable Unit 1 at the Feed Materials Production Center (FMPC). A summary of the baseline conditions at the site is presented. The summary includes a list of radionuclides and chemicals of concern along with information describing toxicity, mobility, and environmental persistence data. "Baseline" physicochemical properties of the Operable Unit 1 wastes are described that affect the design criteria "Reduction of Toxicity, Mobility, or Volume through Treatment." Also, the risk assessment support for the balancing criteria "Long-Term Effectiveness and Permanence" and "Short-Term Effectiveness" is described.

DRAFT

B.2.0 SUMMARY OF BASELINE RISK ASSESSMENT

Section B.2.0 summarizes results presented in Appendix D of the Remedial Investigation Report for Operable Unit 1. An overview of the major aspects of that investigation and a description of how the baseline risk assessment results impact the selection of remedial alternatives during the feasibility study are included.

B.2.1 RADIONUCLIDES AND CHEMICALS OF CONCERN

The baseline risk assessment characterizes the source term by analysis of the contents of the pits and surrounding environmental media. The human health risk potential of each source constituent that is currently of concern or that may be of concern in the future is considered.

Current and future chemicals of concern include isotopes of uranium, technetium, strontium, barium, manganese, magnesium, acetone, 2-butanone, methylene chloride, phenol, 1,1,1-trichloroethane, chloroform, ethyl parathion, methyl parathion, and toluene. Although other radionuclides and chemicals were detected at above-background concentrations, fate and transport modeling results suggest that the reasonable maximally exposed (RME) individual will be exposed in current or future scenarios to those chemicals described above.

B.2.2 EXPOSURE PATHWAYS

The baseline risk assessment considered hypothetical radiation exposures and chemical intakes for the RME individual resulting from all reasonable exposure pathways. These pathways may be grouped into three major exposure categories: direct exposure, inhalation, and ingestion.

The direct exposure scenarios considered included:

- Gamma radiation emitted by the contents of the waste pits
- Radiation from contaminants deposited on surface soils and sediments
- Contact with surface water while swimming
- Dermal contact with hazardous chemicals

The inhalation pathways considered included:

- Airborne particulate and aerosol emissions
- Radon progeny
- Resuspended contaminated dusts and soils
- Release of contaminated materials from water used in residences
- Volatilization of chemicals from soils

DRAFT

The ingestion pathways considered included:

- Drinking contaminated water
- Consumption of food contaminated by the use of contaminated water for irrigating crops, irrigating feed for livestock, and watering livestock
- Consumption of contaminated soil and sediment (child only)
- Consumption of contaminated surface water
- Consumption of food contaminated by uptake of contaminants from soil
- Consumption of food contaminated by livestock ingesting contaminated soil

Four fundamental conditions must be met for any exposure pathway to exist. Each pathway must have:

- A source of contamination
- A mechanism for transporting the contaminant through an environmental medium to a point of exposure
- A potential receptor at the location of the exposure
- A route of exposure

Pathways that did not meet all four conditions were eliminated from further consideration. The baseline risk assessment determined that three of the remaining pathways (inhalation of airborne emissions, ingestion of groundwater and food irrigated with groundwater contaminated by surface water runoff from Operable Unit 1, and sediment ingestion) may pose significant risks to the current group of critical receptors. In addition, the assessment identified a fourth pathway, subsurface migration of contaminants from the waste pits to groundwater, as a potential concern to future receptors.

B.2.3 HUMAN RISK CHARACTERIZATION

Calculations of the doses and risks associated with the four significant exposure pathways for the contaminants of concern are presented in the baseline risk assessment.

B.2.3.1 Carcinogenic Risk

Exposure of children to uranium via ingestion of contaminated sediments eroded from soils in Operable Unit 1 is assumed to be six years rather than a lifetime. The risk of cancer from this exposure pathway is 9×10^{-7}.

The total risk of cancer from exposure to uranium in groundwater contaminated by surface water runoff is 2×10^{-5} for the minimum water concentration and 3×10^{-4} for the maximum water concentration. These risks apply to adults ingesting contaminated drinking water, meat, milk, vegetables, and fruit over a 70-year lifetime.

The risk of cancer from inhalation of airborne emissions from Operable Unit 1 is 3×10^{-5}.

The total risk of cancer from current exposure to Operable Unit 1 contaminants is 3×10^{-4}. This is above the acceptable cancer risk range of 1×10^{-4} to 1×10^{-6} as specified in 40CFR300 Subpart E.

Future receptors have a lifetime cancer risk of 2.5×10^{-2} for radiocarcinogenicity and 1.4×10^{-7} for chemical carcinogenicity due to ingestion of groundwater and food irrigated with groundwater contaminated by leaching of waste pit constituents. This risk is based on fate and transport groundwater modeling results.

Under future land-use conditions, future receptors could potentially be located immediately alongside the pits, assuming that the site's security control measures are lost after 100 years. The lifetime cancer risk to these receptors is 1.0 for radiocarcinogenicity and 9.8×10^{-7} for chemical carcinogenicity based on fate and transport groundwater modeling.

B.2.3.2 Noncarcinogenic Risk

The chemical toxicity hazard associated with exposure to the elemental form of uranium does not appear to be of concern. A hazard index (HI), which is the intake dose divided by the reference dose (RfD), is used as an indicator of chemical toxicity. The value of the HI associated with a child ingesting 0.28 µg/kg-day of uranium in creek sediments is 0.093 using the RfD of 3 µg/kg-day in the denominator. This suggests that children would receive an intake of uranium that is less than 10 percent of the RfD in this conservative exposure scenario.

The HI ranges from 7.97×10^{-4} to 1.4×10^{-2} for the modeled minimum groundwater concentration due to contamination by surface water runoff from Operable Unit 1. The HI ranges from 1.59×10^{-2} to 2.84×10^{-1} for the modeled maximum groundwater concentration. The total HIs are 2.97×10^{-2} and 5.93×10^{-1} for the minimum and maximum water concentrations, respectively. These HIs apply to an adult ingesting contaminated drinking water, meat, milk, vegetables, and fruit over a 70-year lifetime.

The total HI for ingestion of contaminated drinking water, meat, milk, vegetables, and fruit over a 70-year lifetime in the groundwater pathway is 0.11 for future receptors at the southeastern FMPC property boundary within 100 years. The total HI for this pathway for a receptor adjacent to Operable Unit 1 within 100 to 500 years is 2.5 or greater than unity.

B.2.4 EXPOSURE TO ENVIRONMENTAL RECEPTORS

Exposure to environmental receptors is being addressed in detail under the National Environmental Policy Act (NEPA) environmental impact statement (EIS) being performed at the site. This section presents estimates of radiological dose equivalent rates to plants, animals, and aquatic organisms from uranium uptake attributed to Operable Unit 1. These dose equivalent rates are not committed dose equivalents; they represent the dose equivalent delivered to the organism in one year from the estimated uranium concentration (picoCuries/gram [pCi/g]) in the tissue. The estimated maximum uptake of uranium by vegetation in Operable Unit 1 of 31.3 pCi/g would produce a radiation dose of approximately 2.63 rad per year, using an average energy per decay for uranium of 4.5 million electrovolt (MeV). This radiation dose to plant tissue is more than 550 times less than the radiation dose of 1460 rad/year reported to reduce the growth of conifers, which are plants that are particularly sensitive to radiation (Klechkovsckii et al. 1973). Herbs have been reported to be unaffected by radiation doses as high as 350 rads per day. Vegetation samples with radionuclide concentrations less than the estimated maximum would have proportionately lower internal radiation exposures.

No comprehensive data are available on radionuclide uptake or exposure by mammals and birds in the vicinity of Operable Unit 1. A single composite sample of small mammals was collected near Waste Pit 5 (ASI/IT 1990c). Radionuclide concentrations in the composited carcasses were below detection limits, but uranium was detected in the composited organs at 18.6 pCi/g. This would produce an annual dose of 1.6 rad. Radiation exposures required to cause detectable acute to chronic effects in mammals and birds are in the range of several hundred rads (e.g., Iverson and Turner 1976; Snyder et al. 1976; Tester et al. 1968). Therefore, terrestrial animals should not be affected by uranium in Operable Unit 1.

The 95 percent confidence limit for total uranium in surface water in Operable Unit 1 was 9221.3 µg/L (9.2 mg/L). Constant exposure to this concentration of uranium could be toxic to aquatic organisms in Paddys Run and in the wetlands in Operable Unit 1. The 48-hour LC_{50} for the cladoceran Daphnia (D.) magna, a sensitive test organism, was 6 mg/L total uranium in Columbia River water (Poston et al. 1984). Reproduction of D. magna was suppressed at total uranium concentrations of 0.5 to 3.5 mg/L, with toxicity decreasing as alkalinity and hardness of the water increased.

Uranium concentrations toxic to fish are higher than those for invertebrates. For example, Parkhurst et al. (1984) reported that development of trout larvae was affected by uranium only at concentrations greater than 9 mg/L. The 48-hour LC_{50} was 59 mg/L total uranium. However, uranium concentrations in surface water runoff from Operable Unit 12 would be greatly diluted by the Great Miami River. Therefore, the fish in the Great Miami River should not be affected by uranium in surface water runoff from Operable Unit 1.

B.2.5 UNCERTAINTIES

The baseline risk assessment revealed significant uncertainties concerning constituents of concern and exposure pathways that impact the Operable Unit 1 feasibility study (FS). These uncertainties relate to the potential contribution from the waste pits to subsurface soil contamination and aquifer contamination. The extent of contributions to any contamination of these media from the waste pits is presently unknown, yet such contributions would impact the list of constituents of concern and the exposure pathways addressed by the Operable Unit 1 FS report.

The mechanics of transport along the groundwater pathway are poorly understood and directly affect the estimations of dose and risk from this pathway. For example, metals are difficult to evaluate in terms of solubility in groundwater. The more soluble the compound, the greater the potential for it to be mobile and become a future public health concern via groundwater exposure.

B.2.6 CONCLUSIONS

The total cancer risk under baseline conditions is 2.5×10^{-2} for current land-use and 1.0 for future land-use conditions. This risk is not within the acceptable cancer risk range of 1×10^{-4} to 1×10^{-6} as specified in 40CFR300 Subpart E.

DRAFT

B.3.0 FEASIBILITY STUDY RISK CONSIDERATIONS

B.3.1 METHODOLOGY

To date, no specific guidance is available for assessing the risks encountered during remediation activities nor on the levels of detail required to characterize a remedial alternative's ability to provide adequate long-term protection to the public and short-term protection to workers. The U.S. Environmental Protection Agency (EPA) has published guidance on conducting the baseline risk assessment, which is Part A of the series, Risk Assessment Guidance for Superfund (EPA 1989a). EPA is currently preparing draft versions of Part B, refinement of preliminary remediation goals, and Part C, evaluation of remedial alternatives.

In lieu of guidance on performing FS risk assessments, the general methodology chosen for this task follows the methods used to determine baseline risks:

- Determine contaminants of concern associated with each alternative, which are identified in the baseline risk assessment
- Determine potential long-term and short-term exposure pathways associated with each alternative
- Estimate hazards associated with each pathway, either quantitatively or qualitatively

Specific methods used to estimate how remedial alternatives address risk considerations for each identified pathway are discussed below.

B.3.1.1 Direct Radiation

Human health impacts associated with direct exposure to penetrating radiation fields are evaluated for each remedial alternative by modeling potential exposures using a computer code that calculates the radiation exposures with radiation shielding expected from each remedial design. The computer code used to perform these calculations is called MICROSHIELD (Grove Engineering 1987).

MICROSHIELD is a microcomputer adaptation of the mainframe computer code ISOSHLD (Engle 1966). ISOSHLD is a code first written in the 1960s for use on mainframe computers for calculating the effectiveness of shielding materials. The microcomputer-based MICROSHIELD code is capable of analyzing the shielding of gamma radiation for a variety of source and shield geometries, source materials, shield materials, and shield thicknesses. A limited amount of input information is required including radionuclide identities and quantities, source material density,

thickness and density for each layer of shielding material, and the distance to the receptor. MICROSHIELD output includes the photon flux and the dose rate at the receptor location.

B.3.1.2 Airborne Radon

Human health impacts associated with exposure to airborne radon and radon progeny are evaluated for each remedial alternative by modeling potential exposures using a computer code that calculates the effectiveness of each alternative for reducing radon releases with cover materials. The computer code used to perform these calculations is called RAECOM (NRC 1981).

RAECOM is a multiregion, one-dimensional radon generation and transport computer code. The RAECOM code is capable of analyzing the emanation of radon gas through a variety of cover materials. A limited amount of input information is required, including radium-226 (Ra-226) concentration in the source layer and the thickness, porosity, moisture content, and diffusion coefficient for each layer of source and cover material. RAECOM output includes the radon flux rate exiting the surface of the upper layer of source or cover material.

B.3.1.3 Groundwater

Extensive modeling was performed to assess future potential groundwater exposures to Operable Unit 1 constituents under baseline conditions (DOE 1990). Three models were used to perform the task:

- EQ3/6, a geochemical code for estimating leachate concentrations
- ST1D, a one-dimensional analytical solution for estimating flow through the unsaturated glacial overburden
- SWIFT 111, a three-dimensional model for estimating flow through the aquifer

The concentrations of constituents in the leachate flowing from the silos were determined using Extraction Procedure (EP) Toxicity results and geochemical modeling. The flow of leachate from the waste pits to the receptor involves flow through both unsaturated (vadose zone) and saturated zones (regional aquifer, perched zones). Estimates of movement were performed using a no-retardation assumption.

The major worst-case assumptions used in the modeling include:

- Precipitation enters the waste pits to act as the leaching fluid.
- Modeled leachate concentrations are limited only by the solubility of the identified metal species.
- Leachate concentrations from EP Toxicity data are based on acidic analytical conditions that may be unrealistic.
- The leachate concentrations are considered to be constant over time throughout the source depletion period.

To determine to what extent the remedial alternatives that leave the waste in place could contribute to groundwater concentrations above remedial action objective (RAO) levels, the effectiveness of the cap for preventing rain infiltration (97.5 percent) was used to reduce rain infiltration into the waste pits.

B.3.1.4 Occupational Construction Risks

General risks associated with construction operations were estimated for each alternative using historical risk data. Risks were estimated by multiplying man-hours by a unit construction risk (per man-hour). Risk factors used are from the U.S. Department of Labor (1988):

- 3.4×10^{-5} injuries per man-hour
- 5.0×10^{-7} fatalities per man-hour

B.3.1.5 Transportation Risks

Because remedial actions that call for off-site disposal involve stabilization of the packaged waste, no exposures to hazardous materials are expected to occur during transportation. However, the potential exists for highway deaths and accidents to occur. For each alternative involving off-site disposal, the following method was used to calculate transportation risks:

- Estimates were made of the total volume of waste to be transported off site.
- Estimates were made of the total weight of the wastes using density assumptions.
- The estimated weight was used to determine the number of shipping containers required to ship the wastes.
- Values for containers per truckload or railcar load were used to determine the number of truckloads or rail loads required to transport the total volume of waste.
- The number of truckloads or rail loads was multiplied by the round trip mileage required to transport the waste to a western disposal site.

- Total mileage was multiplied by risk factors (in risks per mile) obtained from pertinent sources.

U.S. Department of Transportation (DOT) and Nuclear Regulatory Commission (NRC) regulations were reviewed to determine proper shipping containers and loads (DOT 1989; NRC 1989). Table B.3-1 lists the specific parameters used to calculate transportation risks.

B.3.1.6 Volatilization

For Alternatives 4 and 5 in which the pit contents will be removed, the air concentration of volatile chemicals from the waste pits during remediation was calculated in two steps. First, the emission rate of the chemical was calculated using the "Landfill Without Internal Gas Generation" model from the Superfund Exposure Assessment Manual (EPA 1988). Second, the concentration of the contaminant in ambient air was calculated using the calculated emission rate and the "Near Field Box Model" (Gas Research Institute 1988).

Finally, the air concentration of volatile chemicals was compared to the permissible exposure limits (PEL) (OSHA 1989) in Table B.3-8.

B.3.2 LONG-TERM EFFECTIVENESS

Pathways associated with potential long-term exposures to the constituents of the waste storage pits are listed in Table B.3-2. It is assumed that Alternatives 2, 4A, and 4B will not completely eliminate the potential for long-term risk because the waste will still be on property. Alternatives 5A and 5B completely eliminate all pathways because the waste is transported off site. Below are detailed summaries of each alternative's ability to address the long-term risks associated with each pathway.

B.3.2.1 Direct Radiation

The long-term effectiveness of each remedial alternative in minimizing direct radiation exposure to the public was evaluated. Alternative 0, the no-action alternative, does not reduce the current radiation exposure potential of the site (30 mrem/yr). The surcharge and cap option provides additional shielding and distance for the waste, thus lowering the exposure potential to negligible levels. The remaining options physically remove the wastes from the site thus eliminating the potential for exposure.

TABLE B.3-1

PARAMETERS USED TO CALCULATE TRANSPORTATION RISKS

Parameters	Value	Reference/Justification
Waste Mass		
Alternative 5A	2.08 M lbs	Concrete stabilized waste.
Alternative 5B	1.36 M lbs	Vitrified waste.
Waste Density		
Untreated	110 lb/ft^3	
Concrete stabilized	145 lb/ft^3	
Vitrified	140 lb/ft^3	
Shipping Capacities		
LSA[a] container box	90 ft^3	Manufacturer specifications
Maximum/truck	40,000 lbs	
Gondola capacity	90 tons/car	
Train capacity	100 cars/trip	Assuming exclusive use of the train.
Roundtrip Mileage to Disposal Site		
Truck	4400 miles	Three sites were considered as potential disposal sites: the Hanford site, Richland, WA, the Nevada Test Site (NTS), Nevada, and Envirocare, Clive Utah. Mileage was determined for each site. Mileage to NTS was used for calculations since it was the mid-range of the three sites.
Rail	4550 miles	Same as above
Risk Factors		
Truck Transport	Fatalities/mile	
Occupational driver fatalities	2.1×10^{-9}	DOT[b] 1986; FHA[c] 1988; statistics are for "authorized carrier," which is an interstate carrier.

TABLE B.3-1
(Continued)

Occupational driver injuries	4.1×10^{-8}	Same as above
Public fatalities	1.3×10^{-8}	DOT[a] 1986; FHA[c] 1988; "Public" includes passengers in trucks, driver and passengers in cars, pedestrians, etc.
Public injuries	1.2×10^{-7}	Same as above
Rail Transport		
Employee fatalities	4.6×10^{-8}	DOT[b] 1988
Employee injuries	4.6×10^{-6}	DOT[b] 1988
Public fatalities	1.8×10^{-6}	DOT[b] 1988; "Public includes train passengers, off-duty workers, pedestrians, drivers and passengers in other vehicles, etc.
Public injuries	6.7×10^{-6}	Same as above

[a]LSA - Low specific activity.

[b]DOT - Department of Transportation.

[c]FHA - Federal Highway Administration.

DRAFT

TABLE B.3-2

POTENTIAL FOR LONG-TERM HUMAN EXPOSURES RELATED TO REMEDIATION OF OPERABLE UNIT 1 AT THE FEED MATERIALS PRODUCTION CENTER

Remediation Alternative	Long-Term Exposure Pathways - Security Control Measures in Place for 100 Years	Long-Term Exposure Pathways - No Security Control Measures After 100 years
Alternative 0 No action	Sediment ingestion Exposure to groundwater at eastern property boundary Fugitive dust	Sediment ingestion Exposure to groundwater near pits Gamma doses to resident farmer Radon exposure Decreased fugitive dust due to ecological succession
Alternative 2 Surcharging and cap	Exposure to entrained groundwater at eastern property boundary Fugitive dust	Decreased exposure via groundwater pathway Decreased radiation potential above cap Elimination of radon and fugitive exposures
Alternative 4A Excavate and stabilize with concrete, store on site	Exposure to entrained groundwater at eastern property boundary Fugitive dust	Decreased exposure via groundwater Decreased potential for direct radiation exposures Decreased radon exposures Elimination of fugitive dust exposures
Alternative 4B Excavate and vitrify. Store on site	Exposure to entrained groundwater at eastern property boundary Fugitive dust	Decreased exposure via groundwater Decreased potential for direct radiation exposures Decreased radon exposures Elimination of fugitive dust exposures
Alternative 5A Excavate and stabilize with concrete. Ship off site	Exposure to entrained groundwater at eastern property boundary Fugitive dust	Decreased exposure via groundwater Decreased potential for direct radiation exposures Decreased radon exposures Elimination of fugitive dust exposures
Alternative 5B Excavate and vitrify. Ship off site	Exposure to entrained groundwater at eastern property boundary Fugitive dust	Decreased exposure via groundwater Decreased potential for direct radiation exposures Decreased radon exposures Elimination of fugitive dust exposures

B.3.2.2 Airborne Emissions

B.3.2.2.1 Radon

The long-term effectiveness of each remedial alternative for airborne radon release is assessed by comparing the estimated radon flux rate exiting the upper layer of cover material with the operable unit-specific RAO of 20 picoCuries per square meter per second (pCi/m^2-s) from a single source. The estimated radon flux rates are presented in Table B.3-3. The data in Table B.3-3 indicate the radon flux rate is estimated to exceed the RAO for the no-action alternative. The other alternative reduces radon levels below the RAO of 20 pCi/m^2-s.

B.3.2.2.2 Fugitive Dust

The long-term effectiveness of each remedial alternative to minimize exposures via fugitive dust was evaluated. The no-action alternative (Alternative 0) is expected to generate little or no dust due to ecological succession (growth of vegetation) on the site. The surcharge and cap option (Alternative 2) and the two engineered storage options are expected to isolate the contaminated materials from the atmosphere for the foreseeable future thus preventing resuspension of contaminated dusts; therefore, long-term exposures to fugitive dusts are not considered to be plausible.

B.3.2.3 Groundwater

Alternative 2 requires leaving the waste pits in place. For this alternative, estimates of the risk for future exposure to constituents via the groundwater pathway should be significantly decreased. However, the risk for this pathway after Alternative 2 is in place will be quantified in the next draft of this document. Alternative 4 requires moving wastes to the on-property tumulus. Potential long-term residual risk may be associated with the tumulus; however, design will minimize long-term threats.

Future potential groundwater hazards can only be addressed with the aid of models, which are described in Section B.3.1.3. When applied to Alternative 0, the models estimate that RAOs will not be met for uranium.

Alternative 5 would have the greatest long-term effectiveness because the waste would be transported off site.

TABLE B.3-3

ESTIMATED LONG-TERM AIRBORNE RADON FLUX RATES FROM OPERABLE UNIT 1

Alternative	Estimated Maximum Radon Flux Rate ($pCi/m^2/s$)
0	<100[a]
2	<0.0002[b]
4A	[c]
4B	[c]
5A	[c]
5B	[c]

[a]Microshield calculations estimated the dose rate to be 120 $pCi/m^2/s$. Due to uncertainties in some of the input parameters, this was rounded to one significant figure.

[b]This is the calculated flux exiting from the concrete cap. It does not include the additional decrease in radon flux levels attributable to radon attenuation by the four feet of materials over the cap.

[c]Source term removed.

DRAFT

B.3.3 SHORT-TERM EFFECTIVENESS

All alternatives must address the potential for remediation activities to contribute to public health risk to the community and workers. It is generally assumed that workers will follow all as low as reasonably achievable (ALARA) and Occupational Safety and Health Administration (OSHA) procedures, thus they should not be exposed to hazardous levels of contaminants. However, some alternatives potentially involve greater exposures than others, and some types of risk, such as construction accidents and transportation risks, cannot be avoided by following regulatory procedures. Potential short-term exposures are presented in Table B.3-4. Note that many of the short-term exposures listed in Table B.3-4 will only occur in the event of an environmental isolation enclosure (EIE) failure scenario.

B.3.3.1 Protection to Community During Remedial Actions

B.3.3.1.1 Direct Radiation

The short-term impacts of remediation on direct gamma exposures to the public were considered. It was concluded that public exposures via this route were not plausible because site security measures will deny access to the waste storage pits and material processing areas.

B.3.3.1.2 Airborne Emissions

The short-term impacts during remediation on radon and fugitive dust exposures to the public were considered. It was concluded that significant additional public exposures via these routes were not plausible because receptor exposures are very dependent on distance from the source, and site security measures will deny close access to the waste storage pits and material processing areas.

B.3.3.1.3 Transportation Risks

Transportation risks to the community have been quantified for both truck and rail shipping. These risks are listed in Table B.3-5. Members of the public that are at potential risk during transportation of wastes off site include passengers in trucks, drivers and passengers in cars, and pedestrians. For rail transport, the "public" includes train passengers, off-duty workers, pedestrians, and occupants in other vehicles.

Both injuries and fatalities are greater for transport by truck than by rail. The number of injuries and fatalities are higher for Alternative 5A (concrete stabilization) than 5B (vitrification) because the volume of treated waste to be transported for 5A is greater than for 5B.

TABLE B.3-4

POTENTIAL FOR SHORT-TERM HUMAN EXPOSURES DURING REMEDIATION OF THE WASTE STORAGE PITS AT THE FEED MATERIALS PRODUCTION CENTER

Remediation Alternative	Short-Term Exposure Pathways - Additional Public Exposures	Short-Term Exposure Pathways - Potential Occupational Exposures
0	None	None
2	None	Exposure to direct radiation during preliminary work
4A	None	Exposure to direct radiation during excavation, hauling, processing, and placement Exposure to radon during excavation Exposure to fugitive dust during hauling
4B	None	Exposure to direct radiation during excavation, hauling, processing, and placement Exposure to radon during excavation Exposure to fugitive dust during hauling
5A	None	Exposure to direct radiation during excavation, hauling, processing, and transport Exposure to radon during excavation Exposure to fugitive dust during hauling
5B	None	Exposure to direct radiation during excavation, hauling, processing, and transport Exposure to radon during excavation Exposure to fugitive dust during hauling

DRAFT

TABLE B.3-5

PREDICTED PUBLIC TRANSPORTATION FATALITIES AND INJURIES ASSOCIATED WITH REMEDIATION OF OPERABLE UNIT 1

	Truck			Rail		
Alternative	Total Miles[a]	Public Fatalities[b]	Public Injuries[c]	Total Miles[d]	Public Fatalities[e]	Public Injuries[f]
Alternative 5A (Concrete stabilized waste)	9.2×10^8	11.78	107.94	2,370,550	4.35	16.00
Alternative 5B (Vitrified waste)	6.0×10^8	7.70	70.58	1,551,550	2.84	10.47

[a]Assuming truck will travel 4400 round trip miles per truckload.

[b]Based on 1.3×10^{-8} fatalities per truck mile.

[c]Based on 1.2×10^{-7} injuries per truck mile.

[d]Assuming train will travel 4550 mile per round trip per train trip to a western depository; assuming exclusive use of train for FMPC waste (100 cars per train trip); assuming 90 tons/railcar.

[e]Based on 1.8×10^{-6} fatalities per train mile.

[f]Based on 6.7×10^{-6} injuries per train mile.

000203

6438

B.3.3.2 Protection to Workers During Remedial Actions

B.3.3.2.1 Direct Radiation

Occupational radiation exposure limits to a radiation worker are 5 rem per year. Considering the level of exposure reduction measures that will be taken during remedial action, and assuming ALARA consideration must be met for work to proceed, risks to workers should be minimal. To get a relative sense of the potential for the alternative to contribute to a radiation dose, the occupational exposure from direct radiation was calculated for the six options considered using the MICROSHIELD computer code. The source term used was the average reported activities of the nuclides present in the pits (Table B.3-6). This source term also included the appropriate decay products of those reported nuclides. The source was assumed to have the same volume and surface area as the average of volumes and area of Pits 1 through 6. The conservative assumption was then made to use a cylindrical geometry for the source to maximize the dose rate to the receptor (Figure B.3-1).

The source was assumed to be bare (no cover), and the density of the waste was assumed to be 1.4 g/cm^3. Finally, a geometric progression method to approximate buildup was used.

The resulting dose rate of 3.4 x 10^{-3} mrad/hr was then multiplied by a quality factor of 1 to convert the dose rate to a dose equivalent measured in mrem/hr. The total occupational exposure to the work force for each alternative was the product of this dose rate and the man-hours required to excavate the waste under the various options. These estimates, presented in Table B.3-7, are extremely conservative because they assume the total time required to excavate the waste was spent in the area of maximum exposure.

Alternative 0 does not require excavation, thus it produces no worker doses via this path. Likewise, Alternative 2 does not require excavation of the waste but does require some exposure to the site by workers preparing the site for capping (surveyors, laborers dewatering the ponds, etc.). Assuming this preparatory work can be done in 1000 hours of on-property work, the exposure for this option from these activities will be about 14 mrem. Little additional exposure is expected during placement of the cover because the work will be done by heavy equipment, and the workers will be shielded by this equipment and the cover.

The remaining four options call for excavation of the waste. If this requires 306,218 man-hours, then the exposures for each of these alternatives will be just over 1 mrem (Table B-3.7).

DRAFT

TABLE B.3-6

AVERAGE REPORTED ACTIVITIES OF RADIONUCLIDES IN THE WASTE PITS

Nuclide	Weighted Average Act Pits (pCi/g)
U-234	6.2×10^{2}
U-235	1.2×10^{2}
U-238	1.9×10^{3}
Th-228	3.8×10^{1}
Th-230	5.7×10^{3}
Th-232	3.4×10^{1}
Tc-99	3.7×10^{2}
Cs-137	1.2×10^{1}
Ra-226	1.7×10^{2}
Pu-238	6.4×10^{1}
Pu-239	3.1
Ru-106	9.8×10^{-1}
Np-237	2.3
Sr-90	9.4

TABLE B.3-7

ESTIMATED SHORT-TERM RADIOLOGICAL EXPOSURES TO WORKERS DURING REMEDIATION OF WASTE STORAGE PITS

	Significant Direct Radiation Exposures (Man Rem)			
Alternative	During Excavation	During Hauling	During Transport	Radon Exposures (WLM)
0	0	0	0	Baseline
2	0.14[a]	0	0	<0.07
4A	1.0	.004	0	0.35
4B	1.0	.004	0	0.35
5A	1.0	.004	1.1	0.35
5B	1.0	.004	1.1	0.35

[a]Includes only exposures associated with site preparation work (i.e., surveying, fence maintenance, etc.).

DRAFT

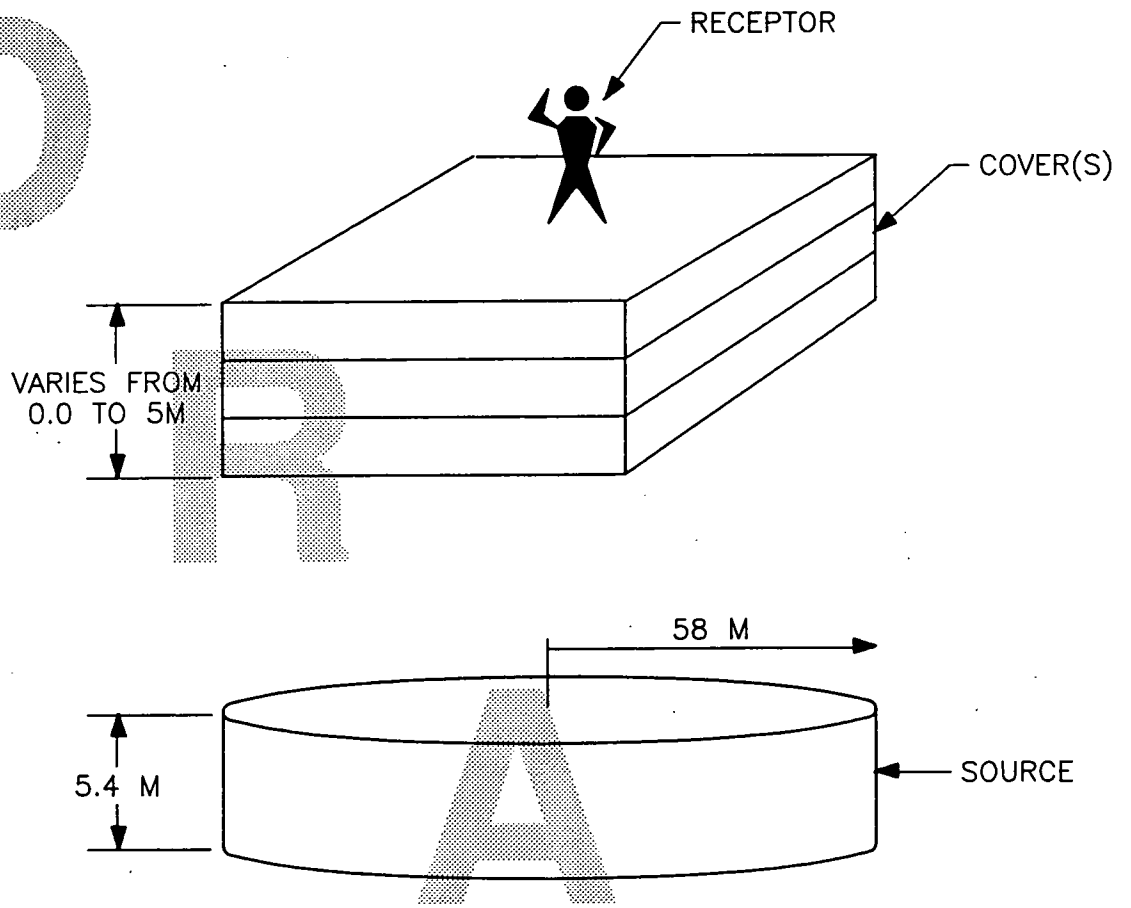

(NOT TO SCALE)

ACAD\DRAWINGS\FERN-20

FIGURE B.3-1. GEOMETRY USED TO ESTIMATE DIRECT GAMMA RADIATION EXPOSURES TO RECEPTOR LOCATED ABOVE WASTE

B.3.3.2.2 Airborne Radon

The greatest potential for occupational radon exposure exists during the excavation phases of the various remedial action alternatives. Because the excavation portions of the options are identical, the radon exposures will be identical. Therefore, one plausible worst-case scenario was quantitatively investigated and applied to all remedial alternatives requiring excavation.

Radon levels in air are partially dependent on soil radium concentrations; therefore, higher radon levels are expected to be encountered when soils containing higher radium concentrations are disturbed. To place an upper bound on the potential radon exposure, the highest recorded average soil radium concentration (550 pCi/g in Pit 5) was used to determine airborne radon concentrations produced as a result of excavation activities. This radium concentration was used as an input datum for a multiregion, one-dimensional radon generation and transport computer program called RAECOM (NRC 1984). This code calculated the radon flux emanated from these soils to be less than 150 pCi/m^2-s.

If all other things are equal, the maximum radon concentrations can be expected immediately downgradient of the operation's largest open working face. Using the known dimensions of the pits, the largest working face is not expected to exceed 50 meters in length.

Assuming complete mixing occurs in the breathing zone (the first 2 meters of air above the ground), the excess radon levels in the air immediately downgradient of this 50-meter working face can be estimated by dividing the total flux generated by the length of the working face by the flow air over a 1-meter-wide path across the open working face:

$$C(\text{pCi Rn/L}) = J(\text{pCi/s})/Q(\text{L/s}) \qquad \text{(Eq. 1)}$$

where

C = concentration of radon within breathing zone (pCi/L)

J = flux from 50 meters long, 1-meter-wide path across working face (7500 pCi/s)

Q = flow rate across 2-meter-tall flow path, assuming average wind speed of 3 m/s (6000 L/s)

Using the parameter values determined above, the excess downgradient radon concentration resulting from excavation of pit soils is expected to be about 1.3 pCi/L.

The risks associated with elevated radon levels in air are not attributable to radon itself but rather to its decay products. The buildup of these daughter products is time dependent. Because the

travel time for air across a 50-meter distance at 3 meters/s is approximately 17 seconds, only one daughter, polonium-218 (Po-218), would be present in any quantity. With a half-life of 3.11 minutes, approximately 0.08 pCi/L of Po-218 would be produced from an aerial radon concentration of 1.3 pCi/L. The following equation was used to determine the working level exposure resulting from this concentration (NCRP 1984):

$$WL = .00103\ (Po\text{-}218) + .00507\ (Pb\text{-}214) + .00373\ (Bi\text{-}214) \qquad \text{(Eq. 2)}$$

where

WL = working level (WL)
Po-218 = airborne concentration of Po-218 (pCi/L)
Pb-214 = airborne concentration of Pb-214 (pCi/L)
Bi-214 = airborne concentration of Bi-214 (pCi/L)

The resulting exposure was approximately 8.0×10^{-5} WL. The excavation of contaminated areas in Operable Unit 1 is estimated to require 306,218 man-hours. Assuming 170 man-hours in a man-month (NCRP 1984), this results in approximately 0.35 working level month (WLM) of exposure to the entire work force during remedial actions requiring excavation (Alternatives 4A, 4B, 5A, and 5B).

B.3.3.2.3 Fugitive Dust

Mechanical activities associated with dirt-moving projects can generate significant quantities of fugitive dust. The most prolific source of this dust is from the truck traffic required to relocate dirt from one location to another. For each of the remedial action alternatives requiring excavation of the materials in the waste storage pits, the truck traffic will be hauling contaminated materials over uncontaminated haul roads to a processing facility. If proper precautions are taken to minimize spillage during hauling, the dust suspended from the roads during this phase will not contain waste pit constituents and will only be of concern if the dust levels approach one of the OSHA nuisance dust threshold limit values (i.e., 0.05 for silica dust).

Because the materials removed from the working face are expected to be at or near field moisture levels, the potential for dust resuspension during excavation is negligible.

B.3.3.2.4 Volatilization

The estimated air concentrations of volatile chemicals during removal of pit contents (Alternatives 4 and 5) are presented in Table B.3-8. These concentrations are compared to the PELs for occupational exposure. The estimated air concentrations of volatile chemicals from the waste pits are all 7 to 11 orders-of-magnitude lower than the corresponding PEL. Therefore, no significant risk to workers during remediation from inhalation of volatile chemicals is expected.

B.3.3.2.5 Construction Risks

Construction risks associated with each alternative are presented in Table B.3-9. Total man-hours required to perform the field and processing area activities were used to determine construction risks. The estimated injuries are based on statistics for injuries that would cause a loss of at least one workday.

The number of fatalities and injuries are greatest for Alternative 4 because of the large number of man-hours required to build the engineered disposal facility. Only Alternative 2 is not expected to result in any construction worker fatalities.

B.3.3.2.6 Transportation Risks

The transportation risks to occupational truck drivers and rail workers associated with the off-site disposal alternatives are provided in Table B.3-10.

Both injuries and fatalities are greater for transport by truck than by rail. Transportation by truck results in one to two driver fatalities. Transportation by rail does not result in any fatalities for rail workers.

DRAFT

TABLE B.3-8

AIR CONCENTRATIONS OF VOLATILE ORGANIC COMPOUNDS DURING EXCAVATION OF THE WASTE STORAGE PITS COMPARED TO PERMISSIBLE EXPOSURE LIMITS

Chemical	Modeled Air Concentration (mg/m^3)	PEL (mg/m^3)[a]
Ethyl benzene		435
Pit 1	5.7×10^{-8}	
Pit 2	2.1×10^{-8}	
Burn Pit	4.4×10^{-8}	
Toluene		200[b]
Pit 1	3.5×10^{-7}	
Pit 4	3.9×10^{-7}	
Pit 6	4.2×10^{-7}	
Burn Pit	4.6×10^{-8}	
Xylenes		435
Pit 2	4.8×10^{-7}	
Pit 6	4.6×10^{-7}	
Burn Pit	1.5×10^{-7}	
Acetone		2400
Pit 1	1.9×10^{-5}	
Pit 2	3.4×10^{-5}	
Pit 3	4.9×10^{-5}	
Pit 4	2.6×10^{-5}	
Pit 5	3.3×10^{-5}	
Pit 6	5.5×10^{-5}	
Burn Pit	5.9×10^{-6}	
Clearwell	3.7×10^{-5}	
2-Butanone		590
Pit 1	5.3×10^{-5}	
Pit 2	1.7×10^{-5}	
Pit 3	4.4×10^{-5}	
Pit 4	7.2×10^{-7}	
Pit 6	6.5×10^{-6}	
Burn Pit	1.7×10^{-7}	
Chloroform		240
Pit 1	1.2×10^{-5}	
Pit 4	8.7×10^{-5}	
Methylene chloride		500[b]
Pit 1	1.3×10^{-5}	
Pit 2	1.6×10^{-5}	

DRAFT

TABLE B.3-8
(Continued)

Chemical	Modeled Air Concentration (mg/m^3)	PEL (mg/m^3)[a]
Pit 3	2.5×10^{-5}	
Pit 4	1.3×10^{-5}	
Pit 5	5.4×10^{-5}	
Pit 6	9.7×10^{-6}	
Burn Pit	1.7×10^{-6}	
Clearwell	1.3×10^{-5}	
Tetrachloroethylene		100[b]
Pit 1	3.0×10^{-7}	
Pit 4	1.3×10^{-4}	
Burn Pit	4.7×10^{-7}	
1,1,1-Trichloroethane		1900
Pit 1	1.2×10^{-6}	
Pit 2	8.4×10^{-7}	
Pit 4	1.2×10^{-6}	
Trichloroethene		100[b]
Pit 4	2.9×10^{-6}	
Pit 6	6.3×10^{-7}	
Phenol		19
Pit 2	6.4×10^{-8}	
Pit 5	2.3×10^{-8}	
Burn Pit	1.4×10^{-8}	

[a]Permissible exposure limit Source: Air Contaminants - Permissible Exposure Limits (Title 29 Code of Federal Regulations Part 1910.1000, OSHA (1989) 3112.

[b]Eight-hour time-weighted average in ppm.

DRAFT

TABLE B.3-9

CONSTRUCTION RISKS ASSOCIATED WITH REMEDIATION OF OPERABLE UNIT 1

Alternative	Man-hours[a]	Construction Fatalities[b]	Construction Injuries[c]
2	899,655	0.45	30.59
4A	6,397,652	3.20	217.52
4B	6,734,571	3.37	229.00
5A	2,911,226	1.46	99.00
5B	4,234,459	2.12	144.00

[a]Based on mechanical work man-hours used for cost estimates (minus "productivity factors").

[b]Based on 5×10^{-7} fatalities per man-hour.

[c]Based on 3.4×10^{-5} injuries per man-hour.

DRAFT

TABLE B.3-10

OCCUPATIONAL TRANSPORTATION FATALITIES AND INJURIES ASSOCIATED WITH REMEDIATION OF OPERABLE UNIT 1

	Truck			Rail		
Alternative	Total Miles[a]	Occupational Fatalities[b]	Occupational Injuries[c]	Total Miles[d]	Occupational Fatalities[e]	Occupational Injuries[f]
Alternative 5A (Concrete stabilized waste)	9.2×10^8	1.94	37.77	2,370,550	0.11	10.90
Alternative 5B (Vitrified waste)	6×10^8	1.27	24.69	1,551,550	0.07	7.13

[a]Assuming truck will travel 4400 round-trip miles per truckload.

[b]Based on 2.1×10^{-9} fatalities per truck mile.

[c]Based on 4.1×10^{-8} injuries per truck mile.

[d]Assuming train will travel 4550 miles per round trip per train to a western depository; assuming exclusive use of train for FMPC waste (100 cars per train trip); assuming 90 tons/railcar.

[e]Based on 4.6×10^{-8} fatalities per train mile.

[f]Based on 4.6×10^{-6} injuries per train mile.

000234

6438

REFERENCES

Engle, R.L. et al., 1966, "ISOSHLD, A Computer Code for General Purpose Isotope Shielding Analysis," BNWL-2316, U.S. Dept. of Energy, Richland, WA.

Gas Research Institute, 1988, "Management of Manufactured Gas Plant Sites Volume III Risk Assessment," Chicago, IL.

Grove Engineering, Inc., 1987, "Microshield Version 3," Grove Engineering, Inc., Rockville, MD.

Klechkovsckii, V. M., G. G. Polikarpov and R. M. Aleksakhin, 1973, Radioecology, John Wiley and Sons, New York, NY.

National Council on Radiation Protection and Measurements, 1984, Evaluation of Occupational and Environmental Exposures to Radon and Radon Daughters in the United States, Report 78, Bethesda, MD.

National Council on Radiation Protection and Measurements, 1987, "Recommendations on Limits For Exposure to Ionizing Radiation," Report 91, Bethesda, MD.

Parkhurst, B. R., R. G. Elder, J. S. Meyer, D. A. Sanchez, R. W. Pennak and W. T. Waller, 1984, "An Environmental Hazard Evaluation of Uranium in a Rocky Mountain Stream," Environmental Toxicology and Chemistry, Volume 3, pp. 113-124.

Poston, T. M., R. N. Hanf and M. A. Simmons, 1984, "Toxicity of Uranium to *Daphnia magna*," Water, Air, and Soil Pollution, Volume 22, pp. 289-298.

Schroeder, P.R., J.M. Morgan, T.M. Walski and A.C. Gibson, 1984, "Hydrologic Evaluation of Landfill Performance (HELP) Model: Volume 1: User's Guide for Help Version 1." EPA/530-SW-84-009, Municipal Environmental Research Laboratory, U.S. Environmental Protection Agency, Cincinnati, OH.

Templeton, W. L., 1975, "Effects of Radiation on Aquatic Populations," Environmental Toxicity of Aquatic Radionuclides: Models and Mechanisms, Ann Arbor Sciences Publishers, Ann Arbor, MI, pp. 287-301.

U.S. Department of Energy, 1990, "Draft Remedial Investigation Report for Operable A Unit 4: Volume 2 Baseline Risk Assessment," DOE Oak Ridge Operations Office, Oak Ridge, TN.

U.S. Department of Labor, Bureau of Labor Statistics, 1988, "Reports on Survey of Occupational Injuries and Illnesses," DOL, Washington, D.C.

U.S. Department of Labor Occupational Safety and Health Administration, 1989, "Air Contaminants - Permissible Exposure Limits," OSHA-3112.

U.S. Department of Transportation, 1989, "49 CFR Parts 171, 172, 173, 174, 175, 176, 177 and 178: Transportation Regulations; Compatibility with Regulations of the International Atomic Energy Agency (IAEA): Notice of Proposed Rule," Federal Register, 54 (218): 47454-47490.

U.S. Environmental Protection Agency, 1985, "Superfund Public Health Evaluation Manual," EPA 540/1-86/060.

U.S. EPA, 1988, "Superfund Exposure Assessment Manual," EPA/540/1-88/001.

U.S. Environmental Protection Agency, 1989a, "Risk Assessments Methodology, Environmental Impact Statement NESHAPS For Radionuclides, Background Information Document - Volume 1," EPA/520 1-89-005.

U.S. Environmental Protection Agency, 1989b, "Health Effects Summary Tables: Fourth Quarter FY 1989," OERR 9200.6-303-(89-4).

U.S. Nuclear Regulatory Commission, 1981, "Handbook for the Determination of Radon Attenuation Through Cover Materials," NUREG/CR-2340, prepared by Rogers and Associates Engineering Corporation for the U.S. Nuclear Regulatory Commission.

U.S. Nuclear Regulatory Commission, 1984, "Radon Attenuation Handbook for Uranium Mill Tailings Cover Design," NUREG/CR-3533, prepared by Rogers and Associates Engineering Corporation for the U.S. Nuclear Regulatory Commission.

U.S. Nuclear Regulatory Commission, 1989, "10 CFR Part 91: Transportation Regulations; Compatibility with the International Atomic Energy Agency (IAEA): Proposed Rule," Federal Register, 53(110): 21550-21581.

Westinghouse Materials Company of Ohio, 1989, "Feed Materials Production Center Environmental Monitoring Annual Report for 1988," FMPC-2173, by Westinghouse Materials Company of Ohio, Cincinnati, OH.

DRAFT

APPENDIX C

DRAFT

APPENDIX C
WASTE PITS, BURN PIT, AND CLEARWELL CHARACTERISTICS

TABLE C-1.

OPERABLE UNIT 1 - WASTE PIT 1 CHARACTERISTICS

Item No.	Description	Quantities and Units	References[a] and/or Comments
1.	Area	82,693 ft^2 (1.8 acres)	Reference 1, 5
2.	Contents: Neutralized waste filter cakes, scrap graphite, brick scrap, sump liquor and cakes, 55-gallon drums, depleted slag, and fly ash	33,676 yd^3	Wastes deposited in Pit 1 are termed "dry" solid wastes - Reference 2, 5
3.	Surface water	None	Pit has been covered - Reference 2
4.	Geotechnical data:		Reference 3
	Dry density	109.4 lb/ft^3	
	Specific gravity	2.62	
	Moisture content[b]	20.0 percent	
5.	Material consistency: The pit was termed "dry." However, sump liquor was deposited and surface infiltration has influenced the consistency. The geological description of the borings indicates materials classified as silts and clays, with varying grain size and moisture contents. Solid, semisolid, and grease-like materials were observed.		Reference 4
6.	Radioactive material concentrations		Reference 1
	Radium-226	12 to 60.2 pCi/g	
	Uranium-238	360 to 6,980 pCi/g	
	Uranium-235	16 to 151 pCi/g	
	Thorium-230	122 to 1,980 pCi/g	
	Thorium-232	1.8 to 17 pCi/g	
	Technetium-99	1 to 15 pCi/g	

TABLE C-1.
(Continued)

Item No.	Description	Quantities and Units	References[a] and/or Comments
7.	Radioactive material quantities		Reference 2
	Uranium-238	52,000 kg	
	Uranium-235	370 kg	
	Total curies	108 Ci	
8.	Volatile inorganics		Reference 1
	Arsenic	14.46 to 15.2 mg/kg	
	Mercury	0.26 to 0.36 mg/kg	
9.	Organics		Reference 1
	PCBs (Aroclors 1248, 1254, and 1260)	720 to 10,000 ug/kg	
	4,4-DDT	1,600 µg/kg	
10.	HSL semivolatiles		Reference 1
	Chrysene	510 µg/kg	
	Phenanthrene	770 to 2,300 µg/kg	
11.	HSL inorganics		Reference 1
	Aluminum	1,703 to 20,223 mg/kg	
	Calcium	4,756 to 192,498 mg/kg	
	Magnesium	7,614 to 36,957 mg/kg	
	Iron	1,833 to 19,688 mg/kg	
12.	Hazardous materials/wastes		Reference 1 All samples tested were within the established limits for corrosivity, reactivity, ignitability, and EP Toxicity.
13.	Listed hazardous materials	Maximum concentrations	Reference 1
	Chloroform (U044)	210 ppb	
	Chrysene (U050)	510 ppb	

[a]References are listed in Table C-8
[b]By percent of dry weight

TABLE C-2.

OPERABLE UNIT 1 - WASTE PIT 2 CHARACTERISTICS

Item No.	Description	Quantities and Units	References[a] and/or Comments
1.	Area	44,578 ft^2 (1.02 acres)	Reference 1, 5
2.	Contents: Neutralized waste filter cakes, scrap graphite, brick scrap, sump liquor and cakes, slag, fly ash, 55-gallon drums, and construction rubble	18,478 yd^3	Wastes deposited in Pit 2 are termed "dry" solid wastes - Reference 2, 5
3.	Surface water	None	Pit has been covered - Reference 2
4.	Geotechnical data:		Reference 3
	Dry density	86.3 lb/ft^3	
	Specific gravity	2.59	
	Moisture content[b]	20.3 percent	
5.	Material consistency: The pit was termed "dry." However, sump liquor was deposited and surface infiltration has influenced the consistency. The geological description of the borings indicates coarse sand-sized materials, clay- and silt-sized material of semisolid consistency, and various clay-like materials becoming wet between 7 and 10 feet. Chunks of concrete up to 1 inch in size were encountered.		Reference 4
6.	Radioactive material concentrations		Reference 1
	Radium-226	12.2 to 412 pCi/g	
	Uranium-238	53 to 17,900 pCi/g	

TABLE C-2.
(Continued)

Item No.	Description	Quantities and Units	References[a] and/or Comments
	Radioactive material concentrations (Continued)		Reference 1
	Uranium-235	1 to 8,780 pCi/g	
	Thorium-230	1.2 to 3,980 pCi/g	
	Thorium-232	0.1 to 88 pCi/g	
	Technetium-99	1.0 to 618 pCi/g	
7.	Radioactive material quantities		Reference 2
	Uranium-235	2,550 kg	
	Uranium-238	1,206,000 kg	
	Thorium-230	404 kg	
	Total curies	15 Ci	
8.	Volatile inorganics		Reference 1
	Arsenic	2.75 to 10.06 mg/kg	
	Mercury	0.22 to 0.70 mg/kg	
9.	Organics		Reference 1
	PCBs (Aroclors 1248, 1254, and 1260)	321 to 1,800 µg/kg	
	4,4-DDT	580 to 1,400 µg/kg	
	Vinyl chloride (volatile)	670 µg/kg	
10.	HSL semivolatiles		Reference 1
	Chrysene	920 to 180,000 µg/kg	
	Fluoranthene	590 to 460,000 µg/kg	
	Phenanthrene	1,700 to 370,000 µg/kg	
	Pyrene	1,600 to 310,000 µg/kg	
	2-Methylnaphthalene	7,000 to 7,000 µg/kg	
	4-Chlorophenyl-phenylether	62,000 to 62,000 µg/kg	
	Acenaphthene	43,000 to 43,000 µg/kg	
	Anthracene	120,000 to 120,000 µg/kg	

TABLE C-2.
(Continued)

Item No.	Description	Quantities and Units	References[a] and/or Comments
	HSL semivolatiles (continued)		
	Benzo(a)anthracene	860 to 130,000 µg/kg	
	Benzo(b)fluoranthene	760 to 110,000 µg/kg	
	Benzo(g,h,i)perylene	42,000 to 42,000 µg/kg	
	Benzo(k)fluoranthene	600 to 120,000 µg/kg	
11.	HSL inorganics		Reference 1
	Aluminum	7,242 to 22,422 mg/kg	
	Magnesium	8,885 to 26,677 mg/kg	
	Iron	13,265 to 24,038 mg/kg	
	Calcium	34,414 to 80,154 mg/kg	
12.	Hazardous materials/wastes		Reference 1 All samples tested were within the established limits for corrosivity, reactivity, ignitability, and EP Toxicity
13.	Listed hazardous materials	Maximum concentrations	Reference 1
	Benzo(a)pyrene (U022)	140,000 ppb	
	Chrysene (U050)	180,000 ppb	
	Fluoranthene (U120)	460,000 ppb	
	Pyrene (U137)	46,000 ppb	
	Naphthalene (U165)	16,000 ppb	
	Vinyl chloride (U043)	670 ppb	
	Fluorine (P056)	62,000 ppb	

[a]References are listed in Table C-8
[b]By percent of dry weight

TABLE C-3.

OPERABLE UNIT 1 - WASTE PIT 3 CHARACTERISTICS

Item No.	Description	Quantities and Units	References[a] and/or Comments
1.	Area	241,175 ft^2 (5.53 acres)	Reference 1, 5
2.	Contents: Lime neutralized raffinate, raffinate concentrate, slag leach residues, filter cakes, fly ash, lime sludge, and wooden pallets	213,248 yd^3	Wastes deposited in Pit 3 are termed "wet" solid wastes - Reference 2, 5
3.	Surface water	None	Pit has been covered - Reference 2
4.	Geotechnical data:		Reference 3
	Dry density	88.3 lb/ft^3	
	Specific gravity	2.54	
	Moisture content[b]	30.1 percent	
5.	Material consistency: The upper strata is a coarse-grained material underlain by very soft, moist to wet, semisolid material. Wood fragments were encountered.		Reference 4
6.	Radioactive material concentrations		Reference 1
	Radium-226	3.1 to 369 pCi/g	
	Uranium-235	2.5 to 21 pCi/g	
	Uranium-238	134 to 1,380 pCi/g	
	Thorium-230	15 to 21,900 pCi/g	
	Thorium-232	1.0 - 121 pCi/g	
	Technetium-99	1.0 to 1,110.0 pCi/g	

TABLE C-3.
(Continued)

Item No.	Description	Quantities and Units	References* and/or Comments
7.	Radioactive material quantities		Reference 2
	Uranium-235	1,771 kg	
	Uranium-238	129,000 kg	
	Thorium-230	400 kg	
	Total curies	553 Ci	
8.	Volatile inorganics		Reference 1
	Arsenic	15.41 to 3,049.06 mg/kg	
	Mercury	0.45 to 4.01 mg/kg	
9.	Organics		The concentration level for all organics analyzed was below quantification level. See Appendix B of Reference 1 for concentrations.
10.	HSL semivolatiles		The concentration level for all HSL semivolatiles analyzed was below quantification level. See Appendix B of Reference 1 for concentrations.
11.	HSL inorganics		Reference 1
	Aluminum	8,220 to 64,100 mg/kg	
	Magnesium	21,492 to 51,570 mg/kg	
	Iron	10,730 to 26,919 mg/kg	
	Calcium	53,183 to 178,241 mg/kg	
	Arsenic	15 to 3,049 mg/kg	
	Vanadium	50 to 9,696 mg/kg	
	Lead	26 to 613 mg/kg	

TABLE C-3.
(Continued)

Item No.	Description	Quantities and Units	References[a] and/or Comments
12.	Hazardous materials/wastes		Reference 1 All samples tested were within the established limits for corrosivity, reactivity, ignitability, and EP Toxicity.
13.	Listed hazardous materials		The concentration level for all listed hazardous materials analyzed was below quantification level. See Appendix B of Reference 1 for concentrations.

[a]References are listed in Table C-8
[b]By percent of dry weight

DRAFT

000245

6438

TABLE C-4.

OPERABLE UNIT 1 - WASTE PIT 4 CHARACTERISTICS

Item No.	Description	Quantities and Units	References[a] and/or Comments
1.	Area	83,799 ft^2 (1.92 acres)	Reference 1, 5
2.	Contents: Process residues, filter cakes, slurries, raffinates, depleted graphite, barium chloride, thorium metal, noncombustible trash, asbestos, construction rubble, and scrap drums.	53,706 yd^3	Wastes deposited in Pit 4 are termed "dry" solid wastes - Reference 2, 5
3.	Surface water	None	Pit has been covered - Reference 2
4.	Geotechnical data:		Reference 3
	Dry density	120.6 lb/ft^3	
	Specific gravity	3.33	
	Moisture content[b]	22.4 percent	
5.	Material consistency: Silt and sand-sized material with layers of clay-sized material below 10 feet. The material was saturated below 9 feet.		Reference 4
6.	Radioactive material concentrations		Reference 1
	Radium-226	5 to 20 pCi/g	
	Uranium-235	35 to 426 pCi/g	
	Uranium-238	509 to 15,800 pCi/g	
	Thorium-230	2.2 to 566 pCi/g	
	Thorium-232	0.3 to 21 pCi/g	
	Technetium-99	6.8 to 225 pCi/g	

TABLE C-4.
(Continued)

Item No.	Description	Quantities and Units	References[a] and/or Comments
7.	Radioactive material quantities		Reference 2
	Uranium-235	5,529 kg	
	Uranium-238	3,048,087 kg	
	Thorium-230	61,800 kg	
	Total curies	233 Ci	
8.	Volatile inorganics		Reference 1
	Arsenic	4.63 mg/kg	
	Mercury	0.18 to 0.63 mg/kg	
9.	Organics		Reference 1
	PCBs (Aroclors 1242, 1248, and 1254)	99 to 1,034 µg/kg	
	Pesticide (ethyl and methyl parathion)	82 to 2,100 µg/kg	
10.	HSL semivolatiles		Reference 1
	Chrysene	760 µg/kg	
	Fluoranthene	1,000 to 2,200 µg/kg	
	Phenanthrene	1,000 to 2,100 µg/kg	
	Pyrene	670 to 1,400 µg/kg	
	Anthracene	510 to 510 µg/kg	
	Benzo(a)anthracene	750 to 750 µg/kg	
	Benzo(b)fluoranthene	510 to 510 µg/kg	
	Benzo(k)fluoranthene	560 to 560 µg/kg	
	Malathion	670 to 670 µg/kg	
11.	HSL inorganics		Reference 1
	Barium	444 to 6,668 mg/kg	
	Aluminum	3,646 to 10,326 mg/kg	
	Iron	3,046 to 16,128 mg/kg	
	Calcium	14,253 to 61,253 mg/kg	
	Magnesium	11,424 to 24,251 mg/kg	
	Fluoride	47,812 to 124,576 mg/kg	

TABLE C-4.
(Continued)

Item No.	Description	Quantities and Units	References[a] and/or Comments
12.	Hazardous materials/wastes		Reference 1 All samples tested were within the established limits for corrosivity, reactivity, ignitability, and EP Toxicity.
13.	Listed hazardous materials	Maximum concentrations	Reference 1
	Chrysene (U050)	760 ppb	
	Chloroform (U044)	1,300 ppb	
	Fluoranthene (U120)	2,200 ppb	
	Trichloroethene (U228)	300 ppb	
	Benzo(a)pyrene (U022)	550 ppb	
	Pyrene (U137)	1,400 ppb	

[a]References are listed in Table C-8
[b]By percent of dry weight

TABLE C-5.

OPERABLE UNIT 1 - WASTE PIT 5 CHARACTERISTICS

Item No.	Description	Quantities and Units	References[a] and/or Comments
1.	Area	161,103 ft^2 (3.70 acres)	Reference 1, 5
2.	Contents: Solids from neutralized raffinate, slag leach slurry, sump slurry, and lime sludge	98,840 yd^3	Wastes deposited in Pit 5 are termed "wet" solid wastes - Reference 2, 5
3.	Surface water	750,000 gallons	Approximate quantity, volume directly related to precipitation and evaporation - Reference 1
4.	Geotechnical data: Dry density Specific gravity Moisture content[b]	 62.5 lb/ft^3 2.43 59.8 percent	Reference 3
5.	Material consistency: This pit is still open with up to 3 feet of standing surface water over a portion of the pit. The upper 4 feet of the pit consists of watery material with some sand-sized grains. The remaining 25 feet consists of a wet, semisolid material with very little cohesion.		Reference 4

TABLE C-5.
(Continued)

Item No.	Description	Quantities and Units	References* and/or Comments
6.	Radioactive material concentrations		Reference 1
	Radium-226	235 to 999 pCi/g	
	Uranium-235	14 to 79 pCi/g	
	Uranium-238	387 to 1,230 pCi/g	
	Thorium-230	3,080 to 20,200 pCi/g	
	Thorium-232	21 to 90 pCi/g	
	Technetium-99	423 to 2,990 pCi/g	
7.	Radioactive material quantities		Reference 2
	Uranium-235	420 kg	
	Uranium-238	50,309 kg	
	Thorium-230	17,000 kg	
	Total curies	327 Ci	
8.	Volatile inorganics		Reference 1
	Arsenic	139 to 2,800 mg/kg	
	Mercury	1.9 to 6.2 mg/kg	
9.	Organics		Reference 1
	PCBs (Aroclor 1254)	750 ppb	
10.	HSL semivolatiles		The concentration level for HSL semivolatiles analyzed was below quantification level. See Appendix B of Reference 1 for concentrations.

TABLE C-5.
(Continued)

Item No.	Description	Quantities and Units	References[a] and/or Comments
11.	HSL inorganics		Reference 1
	Aluminum	6,373 to 15,400 mg/kg	
	Calcium	116,000 to 206,144 mg/kg	
	Iron	10,979 to 17,900 mg/kg	
	Magnesium	807 to 63,200 mg/kg	
	Arsenic	139 to 2,800 mg/kg	
	Mercury	0.4 to 1.8 mg/kg	
	Vanadium	792 to 5,380 mg/kg	
12.	Hazardous materials/wastes		Reference 1 All samples tested were within the established limits for corrosivity, reactivity, ignitability, and EP Toxicity.
13.	Listed hazardous materials		The concentration level for all listed hazardous materials analyzed was below quantification level. See Appendix B of Reference 1 for concentrations.

[a]References are listed in Table C-8
[b]By percent of dry weight

TABLE C-6.

OPERABLE UNIT 1 - WASTE PIT 6 CHARACTERISTICS

Item No.	Description	Quantities and Units	References[a] and/or Comments
1.	Area	32,400 ft^2 (0.75 acres)	Reference 1, 5
2.	Contents: Depleted slag, scrap green salt, process residues, filter cake, and asbestos	11,556 yd^3	Reference 2, 5
3.	Surface water	unknown	Approximate quantity, volume directly related to precipitation and evaporation - Reference 1
4.	Geotechnical data:		Reference 3
	Dry density	101.2 lb/ft^3	
	Specific gravity	2.87	
	Moisture content[b]	25.4 percent	
5.	Material consistency: Saturated, soft, coarse to fine, sand-sized, and clay-sized materials.		Reference 4
6.	Radioactive material concentrations		Reference 1
	Radium-226	16 to 30 pCi/g	
	Uranium-235	350 to 1,750 pCi/g	
	Uranium-238	12,500 to 18,700 pCi/g	
	Thorium-230	14 to 41 pCi/g	
	Thorium-232	0.2 to 1.2 pCi/g	
	Technetium-99	84 to 164 pCi/g	
7.	Radioactive material quantities		Reference 2
	Uranium-235	843,142 kg	
	Uranium-238	1,740 kg	
	Thorium-230	Unknown	
	Total curies	178 Ci	

TABLE C-6.
(Continued)

Item No.	Description	Quantities and Units	References[a] and/or Comments
8.	Volatile inorganics		Reference 1
	Arsenic	7.61 mg/kg	
	Mercury	0.03 to 0.07 mg/kg	
9.	Organics		The concentration level for all organics analyzed was below quantification level. See Appendix B of Reference 1 for concentrations.
10.	HSL semivolatiles		The concentration level for all HSL semivolatiles analyzed was below quantification level. See Appendix B of Reference 1 for concentrations.
11.	HSL inorganics		Reference 1
	Aluminum	4,730 mg/kg	
	Calcium	22,190 mg/kg	
	Iron	2,750 mg/kg	
	Magnesium	32,101 mg/kg	
	Lead	5 to 60 mg/kg	
	Silver	158 mg/kg	
12.	Hazardous materials/wastes		Reference 1 All samples tested were within the established limits for corrosivity, reactivity, ignitability, and EP Toxicity.
13.	Listed hazardous materials 1,1,2,2-tetrachloroethane (U209)	Maximum concentrations 29,000 ppb	Reference 1

[a]References are listed in Table C-8
[b]By percent of dry weight

TABLE C-7.

OPERABLE UNIT 1 - BURN PIT CHARACTERISTICS

Item No.	Description	Quantities and Units	References[a] and/or Comments
1.	Area	21,724 ft^2 (estimated)	Reference 1, 5
2.	Contents: Pyrophoric and reactive chemicals, oils, and combustible wastes	Unknown	This pit was used to burn various materials. The materials and chemicals remaining or otherwise disposed of are unknown - Reference 2
3.	Surface water	None	Pit has been covered - Reference 2
4.	Geotechnical data:		Reference 3
	Dry density	81.2 lb/ft^3	
	Specific gravity	2.35	
	Moisture content[b]	Unknown	
5.	Material consistency: One area consisted of silt-sized, semisolid material; sand-sized material; and fill with glass, wood, and aluminum. A second area consisted of fine- to medium-sized material underlain with sand-sized, semisolid material.		Reference 4
6.	Radioactive material concentrations		Reference 1
	Radium-226	2.0 to 3.9 pCi/g	
	Uranium-235	0.5 to 27 pCi/g	
	Uranium-238	22 to 454 pCi/g	
	Thorium-230	0.1 to 26 pCi/g	
	Thorium-232	0.1 to 7.7 pCi/g	
	Technetium-99	0.4 to 64 pCi/g	

TABLE C-7.
(Continued)

Item No.	Description	Quantities and Units	References* and/or Comments
7.	Volatile inorganics		Reference 1
	Arsenic	4.38 to 20.91 mg/kg	
	Mercury	0.14 to 0.24 mg/kg	
8.	Organics		Reference 1
	PCBs (Aroclors 1016, 1242, 1248, and 1254)	200 to 2,700 µg/kg	
9.	HSL semivolatiles		Reference 1
	Benzo(b)fluoranthene	69 to 170 µg/kg	
	Benzo(g,h,i)perylene	85 µg/kg	
	Chrysene	73 to 77 µg/kg	
	Pentachlorophenol (2)	1,200 to 2,600 µg/kg	
	Phenanthrene	100 to 190 µg/kg	
	2-Methylnaphthalene	50 µg/kg	
	Tetrachloroethene (volatile)	260 µg/kg	
	Ethylbenzene (volatile)	270 µg/kg	
10.	HSL inorganics		Reference 1
	Aluminum	2,912 to 11,936 mg/kg	
	Magnesium	3,859 to 57,079 mg/kg	
	Calcium	10,114 to 116,322 mg/kg	
	Iron	3,747 to 17,445 mg/kg	
	Lead	7 to 53 mg/kg	
	Silver	7 to 506 mg/kg	
11.	Hazardous materials/wastes		Reference 1 All samples tested were within the established limits for corrosivity, reactivity, ignitability, and EP Toxicity.

TABLE C-7.
(Continued)

Item No.	Description	Quantities and Units	References[a] and/or Comments
12.	Listed hazardous materials	Maximum concentrations	Reference 1
	Chrysene (U050)	77 ppb	
	Fluoroanthene (U120)	220 ppb	
	Phenol (U188)	650 ppb	
	Xylenes (U239)	890 ppb	
	Pyrene (U137)	140 ppb	

[a]References are listed in Table C-8
[b]By percent of dry weight

6438

000256

TABLE C-8.

OPERABLE UNIT 1 - CLEARWELL CHARACTERISTICS

Item No.	Description	Quantities and Units	References and/or Comments
1.	Area	29,450 ft² (0.68 acres)	Reference 1, 5
2.	Contents: Clarified process effluents and surface runoff	Unknown	Clearwell was used as a final setting basin for process water from other pits and storm water runoff - Reference 2
3.	Surface water	1,546,265 gallons (estimated)	
4.	Geotechnical data:	Unavailable	
5.	Material consistency	Unavailable	
6.	Radioactive material concentrations		Reference 1
	Cesium-137	18.0 to 450 pCi/g	
	Radium-226	21.9 to 458 pCi/g	
	Uranium-235	24 to 49 pCi/g	
	Uranium-238	548 to 670 pCi/g	
	Thorium-232	0.1 to 39 pCi/g	
	Thorium-230	0.3 to 5,600 pCi/g	
	Technetium-99	0.40 to 278 pCi/g	
7.	Volatile inorganics		Reference 1
	Arsenic	9.11 to 18.46 mg/kg	
	Mercury	0.42 to 4.38 mg/kg	
8.	Organics		Reference 1
	PCBs (Aroclors 1248 and 1254)	308 to 737 µg/kg	
9.	HSL semivolatiles		The concentration level for all HSL semivolatiles analyzed was below quantification level. See Appendix B of Reference 1 for concentrations.

TABLE C-8.
(Continued)

Item No.	Description	Quantities and Units	References and/or Comments
10.	HSL inorganics		Reference 1
	Aluminum	12,939 to 23,771 mg/kg	
	Magnesium	16,785 to 44,629 mg/kg	
	Calcium	129,305 to 183,078 mg/kg	
	Iron	19,618 to 21,067 mg/kg	
	Mercury	0.4 to 4.4 mg/kg	
	Arsenic	9 to 18 mg/kg	
11.	Hazardous materials/wastes		Reference 1 All samples tested were within the established limits for corrosivity, reactivity, ignitability, and EP Toxicity.
12.	Listed hazardous materials		The concentration level for all listed hazardous materials analyzed was below quantification level. See Appendix B of Reference 1 for concentrations.

References:

1. Weston, Roy F., November 1987, "Characterization Investigation Study Volume 2: Chemical and Radiological Analyses of the Waste Storage Pits," prepared for Westinghouse Materials Company of Ohio, Cincinnati, OH.
2. Advanced Sciences, Inc., October 1986, "Remedial Investigation of the Feed Materials Production Center, Fernald, Ohio, Part I: Evaluation of Current Situation," prepared for Westinghouse Materials Company of Ohio, Cincinnati, OH.
3. Weston, Roy F., March 1988, "Geotechnical Evaluation of Feed Properties Material Properties of Waste Pit Materials at the Feed Materials Production Center, Fernald, Ohio," prepared for Westinghouse Materials Company of Ohio, Cincinnati, OH.
4. Appendix F of Reference 1 - Geological Description of Waste Pit Borings.
5. U.S. Atomic Energy Commission Drawings (by Index Code) 08C-5500-G-00864; 21A-5500-G-00233; 21X-5500-G-00234; 21A-5500-G-00235; 21A-5500-00202; 21A-5500-G-00222. Westinghouse Materials Company of Ohio Drawings (by Index Code) 75-A-5500-G-00111 Rev.0.

000438

6438

APPENDIX D

DRAFT

APPENDIX D

APPLICABLE OR RELEVANT AND APPROPRIATE REQUIREMENTS (ARARS)

TABLE D-1
FEED MATERIALS PRODUCTION CENTER
FERNALD, OHIO
POTENTIAL ARARs
OPERABLE UNIT 1 ALTERNATIVES

Chemical Specific

Chemical, Location, or Action	Requirement	ARAR/TBC	Rationale for Implementation	Alternative Number
Radionuclide Emissions (Except Airborne Radon-222)	40 CFR 61, Subpart H Emissions of radionuclides to the ambient air from DOE facilities shall not exceed those amounts that would cause any member of the public to receive in any year an effective dose equivalent of 10 mrem per year.	Applicable	Radioactive materials within this operable unit could contribute to the dose to members of the public from the air pathway during implementation of remedial actions (since NESHAPS applies to operating units).	All

TABLE D-1 (Continued)
FEED MATERIALS PRODUCTION CENTER
FERNALD, OHIO
POTENTIAL ARARs
OPERABLE UNIT 1 ALTERNATIVES

Chemical Specific

Chemical, Location, or Action	Requirement	ARAR/TBC	Rationale for Implementation	Alternative Number
Radon-222 Emissions	40 CFR 61, Subpart Q No source at a DOE facility shall emit more than 20 pCi/m^2-s of radon-222 as an average for the entire source during periods of storage and disposal.	Applicable	Facilities within this operable unit qualify as sources since they contain radium-226 in sufficient concentrations to emit radon-222.	All

TABLE D-1 (Continued)
FEED MATERIALS PRODUCTION CENTER
FERNALD, OHIO
POTENTIAL ARARs
OPERABLE UNIT 1 ALTERNATIVES

Chemical Specific

Chemical, Location, or Action	Requirement	ARAR/TBC	Rationale for Implementation	Alternative Number
Ohio Water Quality Standards	OAC 3745-1-07 (C) - Use Designations and Criteria All pollutants or combinations of pollutants shall not exceed (outside the mixing zone as defined in this rule) the established numerical acute aquatic criteria (AAC) or chronic aquatic criteria (CAC) for a particular parameter listed in tables 7-1 through 7-15 of this rule (Numerical and narrative criteria for Aquatic Life Habitat and Water Supply use designations).	Applicable	Paddys Run and the Great Miami River are designated as warm water aquatic life habitats. Chemical contaminants within this operable unit could be released such that they could contribute to contamination in these aquatic habitats.	All

TABLE D-1 (Continued)
FEED MATERIALS PRODUCTION CENTER
FERNALD, OHIO
POTENTIAL ARARs
OPERABLE UNIT 1 ALTERNATIVES

Chemical Specific

Chemical, Location, or Action	Requirement	ARAR/TBC	Rationale for Implementation	Alternative Number
Radioactive Materials in Ohio River and in Receiving Waters Outside the Mixing Zone	OAC 3745-1-32 Gross alpha particle activity (including radium-226, but excluding radon and uranium) shall not exceed 15 pCi/l and combined radium-226 and radium-228 shall not exceed 5 pCi/l in receiving waters of the Ohio River. The concentration of gross total beta particle activity shall not exceed 50 pCi/l; the concentration of total strontium-90 shall not exceed 8 pCi/l in receiving waters of the Ohio River.	Applicable	Radioactive materials in this operable unit could be released such that they could contribute to radioactivity in receiving waters of the Ohio River.	All

TABLE D-1 (Continued)
FEED MATERIALS PRODUCTION CENTER
FERNALD, OHIO
POTENTIAL ARARs
OPERABLE UNIT 1 ALTERNATIVES

Chemical Specific

Chemical, Location, or Action	Requirement	ARAR/TBC	Rationale for Implementation	Alternative Number
Control of Asbestos Emissions	OAC 3745-20-05 Specifies the standards which must be met regarding the handling and disposal of asbestos removed from inactive waste disposal areas to limit asbestos emissions.	Applicable	During the process of waste pit stabilization, or removal and treatment, some potential exists for emissions of asbestos to open air.	2, 3, 4, 5

TABLE D-1 (Continued)
FEED MATERIALS PRODUCTION CENTER
FERNALD, OHIO
POTENTIAL ARARs
OPERABLE UNIT 1 ALTERNATIVES

Chemical Specific

Chemical, Location, or Action	Requirement	ARAR/TBC	Rationale for Implementation	Alternative Number
Radiation Doses, Levels, and Concentrations in Restricted and Unrestricted Areas.	10 CFR 20.101-105 OAC 3701-38 Radiation doses, levels, and concentrations for restricted and unrestricted areas shall not exceed specified limits.	Relevant and Appropriate	Radioactive materials in this operable unit can contribute radiation doses, levels, and concentrations to individuals in restricted and unrestricted areas, which could exceed the specified limits.	All

TABLE D-1 (Continued)
FEED MATERIALS PRODUCTION CENTER
FERNALD, OHIO
POTENTIAL ARARs
OPERABLE UNIT 1 ALTERNATIVES

Chemical Specific

Chemical, Location, or Action	Requirement	ARAR/TBC	Rationale for Implementation	Alternative Number
National Ambient Air Quality Standard for Particulate Matter	40 CFR 50.6 OAC 3745-17-02 Particulate emissions from a stationary source shall not exceed 50 $\mu g/m^3$ annually or 150 $\mu g/m^3$ per 24-hour period. (Note: Federal standards are listed since they are more restrictive than Ohio standards.)	Relevant and Appropriate	During the process of materials handling or treatment some potential exists for particulate emissions to open air.	2, 3, 4, 5

TABLE D-1 (Continued)
FEED MATERIALS PRODUCTION CENTER
FERNALD, OHIO
POTENTIAL ARARs
OPERABLE UNIT 1 ALTERNATIVES

Chemical Specific

Chemical, Location, or Action	Requirement	ARAR/TBC	Rationale for Implementation	Alternative Number
National Ambient Air Quality Standard for Lead	40 CFR 50.12 OAC 3745-71-02 Lead emissions from a stationary source shall not exceed 1.5 $\mu g/m^3$ based on a quarterly average.	Relevant and Appropriate	During the process of stabilization, or removal and treatment, some potential exists for emissions of lead to open air.	2, 3, 4, 5

TABLE D-1 (Continued)
FEED MATERIALS PRODUCTION CENTER
FERNALD, OHIO
POTENTIAL ARARs
OPERABLE UNIT 1 ALTERNATIVES

Chemical Specific

Chemical, Location, or Action	Requirement	ARAR/TBC	Rationale for Implementation	Alternative Number
Inorganic Chemicals in Drinking Water	40 CFR 141.11 OAC 3745-81-11 The following maximum contaminant levels (MCLs) for inorganic chemicals are the maximum levels of a contaminant in water which is delivered to a free flowing outlet of the ultimate user of a public water system: • Arsenic 0.05 mg/l • Barium 1.00 mg/l • Cadmium 0.010 mg/l • Chromium 0.05 mg/l • Lead 0.05 mg/l • Mercury 0.002 mg/l • Nitrate 10.0 mg/l • Selenium 0.01 mg/l • Silver 0.05 mg/l	Relevant and Appropriate	The requirement is not applicable since no public water system (as defined in 40 CFR 141) is involved. It is relevant and appropriate to protecting drinking water sources from the same contaminants found in the operable unit. These contaminants may migrate or leach into the underlying aquifer as a consequence of remedial actions.	All

TABLE D-1 (Continued)
FEED MATERIALS PRODUCTION CENTER
FERNALD, OHIO
POTENTIAL ARARs
OPERABLE UNIT 1 ALTERNATIVES

Chemical Specific

Chemical, Location, or Action	Requirement	ARAR/TBC	Rationale for Implementation	Alternative Number
Organic Chemicals in Drinking Water	40 CFR 141.12 OAC 3745-81-12 The following MCLs for organic chemicals are the maximum levels of a contaminant in water which is delivered to a free flowing outlet of the ultimate user of a public water system: • Chloroform 0.1 mg/l • Ethyl-benzene 0.7 mg/l* • Pentachlorophenol 0.2 mg/l* • PCBs 0.0005 mg/l* • Tetrachloroethylene 0.005 mg/l* • Toluene 2.0 mg/l* • Trichloroethylene 0.005 mg/l • 1,1,1-Trichloroethane 0.2 mg/l • Xylene 10.0 mg/l* * Proposed	Relevant and Appropriate	The requirement is not applicable since no public water system (as defined in 40 CFR 141) is involved. It is relevant and appropriate to protecting drinking water sources from the same contaminants found in the operable unit. These contaminants may migrate or leach into the underlying aquifer as a consequence of remedial actions.	All

000269

6438

TABLE D-1 (Continued)
FEED MATERIALS PRODUCTION CENTER
FERNALD, OHIO
POTENTIAL ARARs
OPERABLE UNIT 1 ALTERNATIVES

Chemical Specific

Chemical, Location, or Action	Requirement	ARAR/TBC	Rationale For Implementation	Alternative Number
Radionuclides in Drinking Water	40 CFR 141.15 OAC 3745-81-15 Maximum Contaminant Levels for radioactivity in community water systems are set as follows: • 5 pCi/l of combined radium-226 and radium-228 • 15 pCi/l of gross alpha particle activity (including radium-226, but excluding radon and uranium) 40 CFR 141.16 OAC 3745-81-16 The average annual concentration of beta particle and photon (i.e., gamma) radioactivity from man-made radionuclides in drinking water shall not produce an annual dose equivalent to the total body or any internal organ greater than 4 mrem. The concentration limit for strontium-90 is 8 pCi/l.	Relevant and Appropriate	Radioactive materials in this operable unit could be released such that the radioactive materials could contribute to radioactivity in community water systems.	All

000270

6438

TABLE D-1 (Continued)
FEED MATERIALS PRODUCTION CENTER
FERNALD, OHIO
POTENTIAL ARARs
OPERABLE UNIT 1 ALTERNATIVES

Chemical Specific

Chemical, Location, or Action	Requirement	ARAR/TBC	Rationale for Implementation	Alternative Number
Residual Radioactive Material	40 CFR 192, Subparts A and C Control of residual radioactive material from inactive uranium processing sites shall be designed to: • Be effective for up to 1000 years, to the extent reasonably achievable, and in any case, for at least 200 years. • Provide reasonable assurance that releases of radon-222 from residual radioactive material to the atmosphere will not exceed an average release rate of 20 pCi/m^2-s or increase the annual average concentration of radon-222 in air at or above any location outside the disposal site by more than 0.5 pCi/l.	Relevant and Appropriate	Radioactive materials in this operable unit include residues from uranium processing. Requirements for design of controls should be consistent with design for control of other residual radioactive materials such as mill tailings.	All

6438

000271

TABLE D-1 (Continued)
FEED MATERIALS PRODUCTION CENTER
FERNALD, OHIO
POTENTIAL ARARs
OPERABLE UNIT 1 ALTERNATIVES

Chemical Specific

Chemical, Location, or Action	Requirement	ARAR/TBC	Rationale for Implementation	Alternative Number
Chemicals in Drinking Water (Solid Waste Disposal Facility)	40 CFR 257.3-4 A facility shall not contaminate an underground drinking water source beyond the solid waste boundary (outermost perimeter of the waste). The concentration of chemicals shall not exceed background levels or MCLs, whichever is higher. Inorganic Chemicals — MCLs (mg/l) Arsenic — 0.05 Barium — 1.00 Cadmium — 0.01 Chromium — 0.05 Lead — 0.05 Mercury — 0.002 Nitrate — 10.0 Selenium — 0.01 Silver — 0.05	Relevant and Appropriate	Wastes may migrate into the underlying aquifer and potentially contaminate drinking water systems as a consequence of remedial actions. The ARAR is relevant and appropriate since the operable unit may contain the listed chemicals.	All

6438

000272

TABLE D-1 (Continued)
FEED MATERIALS PRODUCTION CENTER
FERNALD, OHIO
POTENTIAL ARARs
OPERABLE UNIT 1 ALTERNATIVES

Chemical Specific

Chemical, Location, or Action	Requirement	ARAR/TBC	Rationale for Implementation	Alternative Number
Chemicals in Drinking Water (Solid Waste Disposal Facility) (continued)	Organic Chemicals	MCLs (mg/l)		
	Endrin	0.0002		
	Lindane	0.004		
	Methoxychlor	0.1		
	Toxaphene	0.005		
	2, 4-D	0.1		
	2, 4, 5-TP Silvex	0.01		

TABLE D-1 (Continued)
FEED MATERIALS PRODUCTION CENTER
FERNALD, OHIO
POTENTIAL ARARs
OPERABLE UNIT 1 ALTERNATIVES

Chemical Specific

Chemical, Location, or Action	Requirement	ARAR/TBC	Rationale for Implementation	Alternative Number
Chemicals in Drinking Water (Hazardous Waste Disposal Facility)	40 CFR 264, Subpart F A facility shall not contaminate the uppermost aquifer underlying the waste management area beyond the point of compliance, which is a vertical surface located at the hydraulically downgradient limit of the waste management area that extends down into the uppermost aquifer underlying the regulated area. The concentration of chemicals shall not exceed background levels or MCLs, whichever is higher.	Relevant and Appropriate	Wastes may migrate into the underlying aquifer and potentially contaminate drinking water systems as a consequence of remedial actions. The ARAR is relevant and appropriate, since the operable unit may contain the listed chemicals.	All

Inorganic Chemicals	MCLs (mg/l)
Arsenic	0.05
Barium	1.00
Cadmium	0.01
Chromium	0.05
Lead	0.05
Mercury	0.002
Nitrate	10.0
Selenium	0.01
Silver	0.05

TABLE D-1 (Continued)
FEED MATERIALS PRODUCTION CENTER
FERNALD, OHIO
POTENTIAL ARARs
OPERABLE UNIT 1 ALTERNATIVES

Chemical Specific

Chemical, Location, or Action	Requirement	ARAR/TBC	Rationale for Implementation	Alternative Number
Chemicals in Drinking Water (Hazardous Waste Disposal Facility) (continued)	Organic Chemicals	MCLs (mg/l)		
	Endrin	0.0002		
	Lindane	0.004		
	Methoxychlor	0.1		
	Toxaphene	0.005		
	2, 4-D	0.1		
	2, 4, 5-TP Silvex	0.01		

TABLE D-1 (Continued)
FEED MATERIALS PRODUCTION CENTER
FERNALD, OHIO
POTENTIAL ARARs
OPERABLE UNIT 1 ALTERNATIVES

Chemical Specific

Chemical, Location, or Action	Requirement	ARAR/TBC	Rationale for Implementation	Alternative Number
Chemicals in Drinking Water	40 CFR 141.50 - 141.51 - National Primary Drinking Water Standards OAC 3745-81-11 Maximum Contaminant Level Goals (MCLGs) for potential chemicals of concern in community water systems are as follows: Cadmium — MCLGs (mg/l): 0.005 Ethylbenzene — 0.7 Lead — 0.02 Mercury — 0.002 Toluene — 2.0	To be considered	Contents of the operable unit may migrate into the underlying aquifer and into drinking water systems as a consequence of remedial actions. Proposed MCLGs are to be considered together with MCLs in establishing acceptable levels of protectiveness for human health and the environment.	All

TABLE D-1 (Continued)
FEED MATERIALS PRODUCTION CENTER
FERNALD, OHIO
POTENTIAL ARARs
OPERABLE UNIT 1 ALTERNATIVES

Chemical Specific

Chemical, Location, or Action	Requirement	ARAR/TBC	Rationale for Implementation	Alternative Number
Radiation Dose Limit (All Pathways)	DOE Order 5400.5, Chapter II, Section 1.a The exposure of members of the public to radiation sources as a consequence of all routine DOE activities shall not cause, in a year, an effective dose equivalent greater than 100 mrem from all exposure pathways.	To be considered	Radiation sources within this operable unit could contribute to the total dose to members of the public from this DOE facility.	All

TABLE D-1 (Continued)
FEED MATERIALS PRODUCTION CENTER
FERNALD, OHIO
POTENTIAL ARARs
OPERABLE UNIT 1 ALTERNATIVES

Chemical Specific

Chemical, Location, or Action	Requirement	ARAR/TBC	Rationale for Implementation	Alternative Number
Radiation Dose Limit (Drinking Water Pathway)	DOE Order 5400.5, Chapter II, Section 1.d Provide a level of protection for persons consuming water from a public drinking water supply operated by the DOE so that persons consuming water from the supply shall not receive an effective dose equivalent greater than 4 mrem in a year. For multiple radionuclides, the sum of the effective dose equivalents from the radionuclides (excluding radium-226, radium-228, and radon) shall not exceed 4 mrem in a year from drinking water.	To be considered	Radioactive materials within this operable unit could contribute to the dose to members of the public from drinking water.	All

TABLE D-1 (Continued)
FEED MATERIALS PRODUCTION CENTER
FERNALD, OHIO
POTENTIAL ARARs
OPERABLE UNIT 1 ALTERNATIVES

Chemical Specific

Chemical, Location, or Action	Requirement	ARAR/TBC	Rationale for Implementation	Alternative Number
Chemical Reference Dose Guidance Intended to be Protective of Human Health	U.S. EPA Health Effects Assessment Guidance - "Health Effects Assessment Summary Tables (HEAST)" and/or "Integrated Risk Information System" Beryllium 0.005 mg/kg/d Manganese 0.2 mg/kg/d Selenium 0.003 mg/kg/d Thallium 0.0007 mg/kg/d Vanadium 0.007 mg/kg/d Zinc 0.2 mg/kg/d	To be considered	40 CFR 300 requires that in the absense of an ARAR for a contaminant, guidance documents are to be considered when establishing concentrations of contaminants that are protective of human health and the environment.	All

TABLE D-1 (Continued)
FEED MATERIALS PRODUCTION CENTER
FERNALD, OHIO
POTENTIAL ARARs
OPERABLE UNIT 1 ALTERNATIVES

Location Specific

Chemical, Location, or Action	Requirement	ARAR/TBC	Rationale for Implementation	Alternative Number
Area Affecting Stream or River	U.S. Fish and Wildlife Coordination Act 16 U.S.C. 661 40 CFR 6.302 (a) Adverse impacts of activities associated with the destruction or loss of wetlands are to be avoided where practicable alternatives exist. 40 CFR 6.302 (g) After consultation with the U.S. Fish and Wildlife Service and appropriate State agency, actions necessary to protect fish and wildlife from impacts associated with modifying streams or areas affecting streams are to be implemented.	Applicable	In-situ isolation or stabilization would require diverting and/or rechanneling the flow of Paddys Run in order to have sufficient ground area to cap areas within this operable unit. Such action would be coordinated with State and Federal wildlife agencies to ensure preservation of wetlands and aquatic biota and wildlife.	1, 2, 3, 4

TABLE D-1 (Continued)
FEED MATERIALS PRODUCTION CENTER
FERNALD, OHIO
POTENTIAL ARARs
OPERABLE UNIT 1 ALTERNATIVES

Location Specific

Chemical, Location, or Action	Requirement	ARAR/TBC	Rationale for Implementation	Alternative Number
Location Standards for Solid Waste Disposal Facilities	40 CFR 257.3-1 Facilities in floodplain areas shall not restrict the flow of the base flood, reduce temporary water storage capacity of the floodplain, or result in a release of waste so as to pose a hazard to human health.	Relevant and Appropriate	The alternatives which involve contour grading and capping of areas within this operable unit may result in placement of fill material in the floodplain.	1, 2, 3, 4

000261

TABLE D-1 (Continued)
FEED MATERIALS PRODUCTION CENTER
FERNALD, OHIO
POTENTIAL ARARs
OPERABLE UNIT 1 ALTERNATIVES

Location Specific

Chemical, Location, or Action	Requirement	ARAR/TBC	Rationale for Implementation	Alternative Number
Protection of Wetlands	40 CFR 258.12 New solid waste landfill units must not be located in wetlands unless the State approves otherwise.	Relevant and Appropriate	These alternatives will involve the construction of a new on-site solid waste landfill which may impact wetlands areas.	1, 2, 3, 4

TABLE D-1 (Continued)
FEED MATERIALS PRODUCTION CENTER
FERNALD, OHIO
POTENTIAL ARARs
OPERABLE UNIT 1 ALTERNATIVES

Location Specific

Chemical, Location, or Action	Requirement	ARAR/TBC	Rationale for Implementation	Alternative Number
Location Standards for Hazardous Waste Treatment, Storage, or Disposal Facilities	40 CFR 264.18 OAC 3745-54-18 • Floodplain considerations- TSD facilities located in 100-year floodplains must be designed, constructed, operated and maintained to prevent washout of hazardous waste by a 100-year flood unless: - procedures are implemented to allow all waste to be removed safely before flooding to a permitted location not vulnerable to flooding, or - no adverse effects on human health or the environment will result if washout occurs considering the characteristics of the waste and potential impacts of a washout on surface waters, sediments and surface soils within the floodplain.	Relevant and Appropriate	The hazardous wastes which may be removed from this operable unit may be treated, stored, and disposed at a facility located within a 100-year floodplain.	1, 2, 3, 4

TABLE D-1 (Continued)
FEED MATERIALS PRODUCTION CENTER
FERNALD, OHIO
POTENTIAL ARARs
OPERABLE UNIT 1 ALTERNATIVES

Location Specific

Chemical, Location, or Action	Requirement	ARAR/TBC	Rationale for Implementation	Alternative Number
Floodplain Management	Executive Order 11988 Federal agencies proposing actions to be located in a floodplain must first evaluate the potential adverse effects those actions may have on the natural and beneficial values served by the floodplain.	To be considered	Paddys Run, west of this operable unit, is a floodplain area. The alternatives which involve in situ stabilization and capping may result in placement of fill material in the floodplain.	1, 2, 3, 4

TABLE D-1 (Continued)
FEED MATERIALS PRODUCTION CENTER
FERNALD, OHIO
POTENTIAL ARARs
OPERABLE UNIT 1 ALTERNATIVES

Location Specific

Chemical, Location, or Action	Requirement	ARAR/TBC	Rationale for Implementation	Alternative Number
Protection of Wetlands	Executive Order 11990 Federal agencies are directed to avoid construction located in wetlands unless the agency head finds: (1) no practical alternative to such construction, and (2) the proposed action includes all practicable measures to minimize harm to wetlands which may result from such use. Federal agencies proposing actions that may adversely impact wetlands shall consider certain factors relevant to the proposal's effect on the survival and quality of the wetlands. These include: a) public health, safety, and welfare, including water supply, quality, recharge and discharge; pollution; flood and storm hazards; and sediment and erosion;	To be considered	Implementation of the alternatives involving in-situ isolation and capping of areas within the operable unit may impact Paddys Run and adjacent wetlands areas.	1, 2, 3, 4

TABLE D-1 (Continued)
FEED MATERIALS PRODUCTION CENTER
FERNALD, OHIO
POTENTIAL ARARs
OPERABLE UNIT 1 ALTERNATIVES

Location Specific

Chemical, Location, or Action	Requirement	ARAR/TBC	Rationale for Implementation	Alternative Number
Protection of Wetlands (continued)	b) maintenance of natural systems, including conservation and long-term productivity of existing flora and fauna, species and habitat diversity and stability, hydrologic utility, fish, wildlife, timber, and food and fiber resources; and c) other uses of wetlands in the public interest, including recreational, scientific and cultural uses.			

TABLE D-1 (Continued)
FEED MATERIALS PRODUCTION CENTER
FERNALD, OHIO
POTENTIAL ARARs
OPERABLE UNIT 1 ALTERNATIVES

Action Specific

Chemical, Location, or Action	Requirement	ARAR/TBC	Rationale for Implementation	Alternative Number
Dredge & Fill	33 CFR 320.2(f) In evaluating dredge or fill operations, the U.S. Corps of Engineers will follow EPA guidelines and requirements found under 40 CFR 230 which state: No discharge of dredge or fill material is allowed if: • there is a practicable alternative with less of an impact; • the discharge causes or contributes to violations of State Water Quality Standards; • the discharge violates applicable toxic effluent standards or prohibitions; • the discharge jeopardizes endangered or threatened species; • the discharge causes or contributes to significant degradation of waters of the U.S.	Applicable	In-situ isolation or stabilization and capping would require diverting or rechanneling of the flow of Paddys Run in order to have sufficient ground areas to cap portions of the operable unit. The rechanneling would involve dredging, and the capping would involve filling. Both could result in discharges of dredge or fill material to Paddys Run.	1, 2, 3

TABLE D-1 (Continued)
FEED MATERIALS PRODUCTION CENTER
FERNALD, OHIO
POTENTIAL ARARs
OPERABLE UNIT 1 ALTERNATIVES

Action Specific

Chemical, Location, or Action	Requirement	ARAR/TBC	Rationale for Implementation	Alternative Number
Discharge of Treatment System Effluent	40 CFR 122.41 OAC 3745-33-05 Monitoring Requirements Discharges must be monitored to assure compliance. Discharges will be monitored for: • the mass of each pollutant • the volume of each pollutant • frequency of discharge and other measurements as appropriate. 40 CFR 136.1 - 136.4 Approved test methods must be followed for waste constituents to be monitored. Detailed requirements for analytical procedures and quality controls are provided. Sample preservation procedures, container materials, and maximum allowable holding times are prescribed.	Applicable	Required of all direct discharges to waters of the U.S. in order to ensure effluent limitations, water quality standards, and toxic pollutant limitations are being met.	1, 2, 3, 4, 5

00U288

6438

TABLE D-1 (Continued)
FEED MATERIALS PRODUCTION CENTER
FERNALD, OHIO
POTENTIAL ARARs
OPERABLE UNIT 1 ALTERNATIVES

Action Specific

Chemical, Location, or Action	Requirement	ARAR/TBC	Rationale for Implementation	Alternative Number
Discharge of Treatment System Effluent	40 CFR 122.44(a) Best Available Technology Use of best available technology (BAT) economically achievable is required to control toxic and nonconventional pollutants. Use of best conventional pollutant control technology (BCT) is required to control conventional pollutants. Technology-based limitations may be determined on a case-by-case basis. 40 CFR 122.44 OAC 3745-33-04 Water Quality Standards Applicable federally approved State water quality standards must be complied with. These standards may be in addition to or more stringent than other Federal effluent standards under the CWA. 40 CFR 122.44(e) Discharge limitations must be established at more stringent levels than technology-based standards for these pollutants.	Applicable	Applicable to direct discharges of wastewater to waters of the U.S. Treatment of produced waters that will be discharged to waters of the U.S. will be required to meet all applicable effluent limitations, water quality standards and toxic pollutant discharge standards as determined by State and/or Federal agencies having discharge permitting authority.	1, 2, 3, 4, 5

TABLE D-1 (Continued)
FEED MATERIALS PRODUCTION CENTER
FERNALD, OHIO
POTENTIAL ARARs
OPERABLE UNIT 1 ALTERNATIVES

Action Specific

Chemical, Location, or Action	Requirement	ARAR/TBC	Rationale for Implementation	Alternative Number
On-site Solid Non-hazardous Waste Management Facilities	40 CFR 241.200-241.201 Develop a solid, non-hazardous waste handling plan to determine what waste shall be accepted and identify any special handling required. Also, determine specific wastes to be excluded and identify them in the plan. An alternative method of disposal for excluded wastes must also be a part of the solid waste handling plan.	Applicable	Solid, non-hazardous wastes generated as a result of remediation must be managed in accordance with Federal and State regulations.	1, 2, 3, 4, 5

TABLE D-1 (Continued)
FEED MATERIALS PRODUCTION CENTER
FERNALD, OHIO
POTENTIAL ARARs
OPERABLE UNIT 1 ALTERNATIVES

Action Specific

Chemical, Location, or Action	Requirement	ARAR/TBC	Rationale for Implementation	Alternative Number
Solid, Non-hazardous Waste Treatment and Disposal Facility Design Considerations	40 CFR 241.202 ORC 6111.45 OAC 3745-27 Site selection and utilization consistent with public health and welfare, and air and water quality standards and adaptable to appropriate land-use plans. A plan for the design shall be prepared by a professional engineer and approved by the responsible agency prior to authorization for construction. At a minimum, design shall consider hydrogeology, climate, socioeconomic impacts, land use, decomposition gases, leachate vector control, and aesthetics (pertinent details follow). 40 CFR 241.204 Water Quality The location, design, construction, and operation of the land disposal site shall conform to the most stringent of applicable water quality standards established in accordance with, or effective under, the provisions	Applicable	Treatment/disposal facilities for solid, non-hazardous waste must be planned and designed by the facility owner to meet state and federal requirements.	1, 2, 3, 4, 5

TABLE D-1 (Continued)
FEED MATERIALS PRODUCTION CENTER
FERNALD, OHIO
POTENTIAL ARARs
OPERABLE UNIT 1 ALTERNATIVES

Action Specific

Chemical, Location, or Action	Requirement	ARAR/TBC	Rationale for Implementation	Alternative Number
Solid, Non-hazardous Waste Treatment and Disposal Facility Design Considerations (continued)	of the Federal Water Pollution Control Act, as amended. 40 CFR 241.205 Air Quality The design, construction, and operation of the land disposal site shall conform to applicable ambient air quality standards and source control regulations established under the authority of the Clean Air Act, as amended, or Ohio EPA or local standards effective under that Act, if the latter are more stringent. 40 CFR 241.209 Cover Material Cover material shall be applied as necessary to minimize infiltration of precipitation and provide a pleasing appearance.			

TABLE D-1 (Continued)
FEED MATERIALS PRODUCTION CENTER
FERNALD, OHIO
POTENTIAL ARARs
OPERABLE UNIT 1 ALTERNATIVES

Action Specific

Chemical, Location, or Action	Requirement	ARAR/TBC	Rationale for Implementation	Alternative Number
Solid, Non-hazardous Waste Treatment and Disposal Facility Design Considerations (continued)	40 CFR 241.211 Compaction Solid waste shall be compacted to the smallest practicable volume. Safety The land disposal site shall be designed, constructed, and operated in such a manner as to protect the health and safety of personnel associated with the operations. Pertinent provisions of the Occupational Safety and Health Act of 1970 (Pub. L. 91-596) and regulations promulgated thereunder shall apply.			

TABLE D-1 (Continued)
FEED MATERIALS PRODUCTION CENTER
FERNALD, OHIO
POTENTIAL ARARs
OPERABLE UNIT 1 ALTERNATIVES

Action Specific

Chemical, Location, or Action	Requirement	ARAR/TBC	Rationale for Implementation	Alternative Number
Hazardous Waste Determinations	40 CFR 260, Appendix I Outlines the procedure to be followed under: • 40 CFR 261.2 to identify whether a particular material of concern is a "solid waste"; • 40 CFR 261.4 (a) to identify whether a particular exclusion applies to the material eliminating it from definition as a "solid waste"; • 40 CFR 261.3 to identify whether a particular solid waste may be classified as a hazardous waste under Subpart C or Subpart D of 40 CFR 261; and • 40 CFR 261.4 (b), 40 CFR 260.20, and 40 CFR 260.22 to determine if a material, otherwise classified as a "hazardous waste" under Subpart C or Subpart D, may be excluded from RCRA jurisdiction.	Applicable	Areas within this operable unit contain listed or characteristic hazardous waste which must be treated, stored and disposed of in accordance with RCRA.	1, 2, 3, 4, 5

TABLE D-1 (Continued)
FEED MATERIALS PRODUCTION CENTER
FERNALD, OHIO
POTENTIAL ARARs
OPERABLE UNIT 1 ALTERNATIVES

Action Specific

Chemical, Location, or Action	Requirement	ARAR/TBC	Rationale for Implementation	Alternative Number
Empty Containers	40 CFR 261.7 Containers that have held hazardous wastes are "empty" and exempt from further RCRA regulations if: • no more than 2.5 cm (one inch) of residue remains on bottom or inner liner; • less than 3% by weight of total capacity remains (less than 110 gallon container); • less than .3% by weight of total capacity remains (greater than 110 gallon container). Containers that have held acutely hazardous ("p" listed) wastes are "empty" and exempt from further RCRA regulation if: • they or their inner liners have been triple rinsed with an adequate solvent and the inner liner has been removed from the container.	Applicable	Containers used to treat or store hazardous waste from this operable unit may contain hazardous waste residues which must be removed before the containers may be re-used or disposed of.	1, 2, 3, 4, 5

TABLE D-1 (Continued)
FEED MATERIALS PRODUCTION CENTER
FERNALD, OHIO
POTENTIAL ARARs
OPERABLE UNIT 1 ALTERNATIVES

Action Specific

Chemical, Location, or Action	Requirement	ARAR/TBC	Rationale for Implementation	Alternative Number
Generators Who Treat, Store, or Dispose of Hazardous Waste	40 CFR 262.10 Any "generator", as defined by 40 CFR 260.10, who treats, stores, or disposes of hazardous wastes must do the following: • determine, in accordance with 40 CFR 262.11, whether or not the waste is hazardous; • obtain a U.S. EPA identification number in accordance with 40 CFR 262.12 for the purposes of hazardous waste accumulation, recordkeeping, and additional reporting.	Applicable	Hazardous waste removed from this operable unit for treatment, storage, or disposal becomes subject to the generator requirements.	4, 5

TABLE D-1 (Continued)
FEED MATERIALS PRODUCTION CENTER
FERNALD, OHIO
POTENTIAL ARARs
OPERABLE UNIT 1 ALTERNATIVES

Action Specific

Chemical, Location, or Action	Requirement	ARAR/TBC	Rationale for Implementation	Alternative Number
Generators Who Transport Hazardous Waste for Off-site Treatment, Storage or Disposal	40 CFR 262.20 Any generator who transports hazardous waste for off-site treatment, storage or disposal must originate and follow-up the manifest for off-site shipments. 40 CFR 262.30 Before transporting a hazardous waste the generator must package, label, mark and placard the shipment in accordance with U.S. DOT regulations.	Applicable	Hazardous waste removed from this operable unit for offsite treatment, storage, or disposal becomes subject to the generator requirements.	5

TABLE D-1 (Continued)
FEED MATERIALS PRODUCTION CENTER
FERNALD, OHIO
POTENTIAL ARARs
OPERABLE UNIT 1 ALTERNATIVES

Action Specific

Chemical, Location, or Action	Requirement	ARAR/TBC	Rationale for Implementation	Alternative Number
Waste Accumulation On-Site by Generator	40 CFR 262.34 Generators may accumulate hazardous waste on-site for 90 days or less (without meeting permitting standards for storage facilities) provided that they: • use appropriate U.S. DOT containers; • mark accumulation beginning date on tanks/containers; • label and mark tanks/containers in accordance with U.S. DOT requirements; • placard transport vehicle or offer appropriate placards to transporter; • follow interim status standards for less than 90 day storage including: - weekly container and storage areas inspections	Applicable	Hazardous waste removed from this operable unit and waste treatment residues are only subject to the 90-day generator accumulation requirements if the waste is stored on site for 90 days or less. If hazardous waste is stored for more than 90 days the full permitting standards for TSD facilities must be met.	4, 5

TABLE D-1 (Continued)
FEED MATERIALS PRODUCTION CENTER
FERNALD, OHIO
POTENTIAL ARARs
OPERABLE UNIT 1 ALTERNATIVES

Action Specific

Chemical, Location, or Action	Requirement	ARAR/TBC	Rationale for Implementation	Alternative Number
Waste Accumulation On-site by Generator (continued)	- maintenance of aisle space between containers wide enough for person to walk carrying emergency equipment - maintain enough space between containers to allow for visual inspection from top and one side of all containers - put in place appropriate emergency preparedness procedures and equipment - maintain spill response pillows or absorbent - conduct RCRA response training for personnel - put in place a written contingency plan - avoid storage of incompatible wastes in same containment area.			

00125B

6438

TABLE D-1 (Continued)
FEED MATERIALS PRODUCTION CENTER
FERNALD, OHIO
POTENTIAL ARARs
OPERABLE UNIT 1 ALTERNATIVES

Action Specific

Chemical, Location, or Action	Requirement	ARAR/TBC	Rationale for Implementation	Alternative Number
Generator Recordkeeping and Reporting	40 CFR 262, Subpart D • Generators must keep copies for three years of the following documents: - Manifests - Biennial and exception reports - Test results, waste analyses or other determinations made in accordance with 40 CFR 262.11 • Generators must submit biennial reports by March 1, of each even numbered year. • Generators must submit exception reports within 35 days of shipment.	Applicable	Hazardous waste removed from this operable unit are subject to the generator requirements.	4, 5

000300

6438

TABLE D-1 (Continued)
FEED MATERIALS PRODUCTION CENTER
FERNALD, OHIO
POTENTIAL ARARs
OPERABLE UNIT 1 ALTERNATIVES

Action Specific

Chemical, Location, or Action	Requirement	ARAR/TBC	Rationale for Implementation	Alternative Number
Treatment, Storage, or Disposal Facility Standards	40 CFR 264, Subpart B, General Standards • Waste Analysis (40 CFR 264.13)- Operators of a facility must obtain a detailed chemical and physical analysis of a representative sample of each hazardous waste to be treated, stored, or disposed of at the facility prior to treatment, storage, or disposal. • Security (40 CFR 264.14)- Operators of a facility must prevent the unknowing or unauthorized entry of persons or livestock into the active portions of the facility, maintain a 24-hour surveillance system, or surround the facility with a controlled access barrier and maintain appropriate warning signs at facility approaches.	Applicable	Hazardous waste removed from this operable unit must be treated, stored (if more than 90 days), and disposed of in accordance with TSD facility standards.	4, 5

TABLE D-1 (Continued)
FEED MATERIALS PRODUCTION CENTER
FERNALD, OHIO
POTENTIAL ARARs
OPERABLE UNIT 1 ALTERNATIVES

Action Specific

Chemical, Location, or Action	Requirement	ARAR/TBC	Rationale for Implementation	Alternative Number
Treatment, Storage, or Disposal Facility Standards (continued)	• Inspections (40 CFR 264.15)- Operators of a facility must develop a schedule and regularly inspect monitoring equipment, safety and emergency equipment, security devices and operating and structural equipment that are important to preventing, detecting or responding to environmental or human health hazards, promptly or immediately or immediately remedy defects, and maintain an inspection log. • Training (40 CFR 264.16)- Operators must train personnel within 6 months of their assumption of duties at a facility in hazardous waste management procedures relevant to their positions including emergency response training.			

TABLE D-1 (Continued)
FEED MATERIALS PRODUCTION CENTER
FERNALD, OHIO
POTENTIAL ARARs
OPERABLE UNIT 1 ALTERNATIVES

Action Specific

Chemical, Location, or Action	Requirement	ARAR/TBC	Rationale for Implementation	Alternative Number
Treatment, Storage, or Disposal Facility Preparedness and Prevention	40 CFR 264, Subpart C TSD operators must design, construct, maintain and operate facilities to minimize the possibility of a fire, explosion or any unplanned sudden or non-sudden release of hazardous waste to air, soil, or surface water which could threaten human health or the environment. 40 CFR 264.32 All facilities must be equipped with an internal communication or alarm system, a telephone, or a two-way radio for calling outside emergency assistance, fire control, spill control, and decontamination equipment and water at an adequate volume and pressure to supply water hose streams, foam producing equipment, automatic sprinklers or water spray systems.	Applicable	Hazardous waste removed from this operable unit must be treated, stored (if more than 90 days), and disposed of in accordance with TSD facility standards.	4, 5

TABLE D-1 (Continued)
FEED MATERIALS PRODUCTION CENTER
FERNALD, OHIO
POTENTIAL ARARs
OPERABLE UNIT 1 ALTERNATIVES

Action Specific

Chemical, Location, or Action	Requirement	ARAR/TBC	Rationale for Implementation	Alternative Number
Treatment, Storage, or Disposal Facility Preparedness and Prevention (continued)	40 CFR 264.33 All fire and spill- control and decontamination equipment must be tested and maintained as necessary to assure proper emergency operation. 40 CFR 264.34 All personnel must have immediate access to emergency communication or alarm systems whenever hazardous waste is being handled at the facility. 40 CFR 264.35 Aisle space must be sufficient to allow unobstructed movement of personnel, fire and spill control, and decontamination equipment. 40 CFR 264.37 Operators must attempt to make arrangements, appropriate to the waste handled, for emergency response by local and state fire, police and medical personnel.			

TABLE D-1 (Continued)
FEED MATERIALS PRODUCTION CENTER
FERNALD, OHIO
POTENTIAL ARARs
OPERABLE UNIT 1 ALTERNATIVES

Action Specific

Chemical, Location, or Action	Requirement	ARAR/TBC	Rationale for Implementation	Alternative Number
Treatment, Storage, or Disposal Facility Contingency Plan and Emergency Procedures	40 CFR 264, Subpart D Each facility operator must have a contingency plan designed to minimize hazards to human health or the environment due to fires, explosions, or any unplanned releases of hazardous waste constituents to the air, soil, or surface/groundwater. 40 CFR 264.52 Contingency plans should address procedures to implement a response to hazardous substance incidents, internal and external communications, arrangements with local emergency authorities, an emergency coordinator list, a facility emergency equipment list indicating equipment descriptions and locations and a facility personnel evacuation plan.	Applicable	Hazardous waste removed from this operable unit must be treated, stored (if more than 90 days), and disposed of in accordance with TSD facility standards.	4, 5

TABLE D-1 (Continued)
FEED MATERIALS PRODUCTION CENTER
FERNALD, OHIO
POTENTIAL ARARs
OPERABLE UNIT 1 ALTERNATIVES

Action Specific

Chemical, Location, or Action	Requirement	ARAR/TBC	Rationale for Implementation	Alternative Number
Treatment, Storage, or Disposal Facility Contingency Plan and Emergency Procedures (continued)	40 CFR 264.55 Each facility must have an emergency coordinator who has responsibility for coordinating all emergency response measures, is on the premises or on call at all times, is thoroughly familiar with all aspects of the contingency plan, facility operations, location and characteristics of waste handled, location of pertinent records, and facility layout, and who has the authority to commit the resources necessary to implement the contingency plan.			

TABLE D-1 (Continued)
FEED MATERIALS PRODUCTION CENTER
FERNALD, OHIO
POTENTIAL ARARs
OPERABLE UNIT 1 ALTERNATIVES

Action Specific

Chemical, Location, or Action	Requirement	ARAR/TBC	Rationale for Implementation	Alternative Number
Treatment, Storage, or Disposal Facility Operating Record	40 CFR 264, Subpart E 40 CFR 264.73- Operating Record requirements Operators must maintain a written operating record at the facility which contains the following: • description and quantity of each hazardous waste received; • method(s) and date(s) of treatment as required by Appendix I; • location of each hazardous waste received and quantity at each location (including a location map for disposal facility); • inspection and monitoring records; and • other records and reports as specified.	Applicable	Records on hazardous wastes removed from this operable unit must be maintained in accordance with TSD facility standards.	4, 5

TABLE D-1 (Continued)
FEED MATERIALS PRODUCTION CENTER
FERNALD, OHIO
POTENTIAL ARARs
OPERABLE UNIT 1 ALTERNATIVES

Action Specific

Chemical, Location, or Action	Requirement	ARAR/TBC	Rationale for Implementation	Alternative Number
Treatment, Storage, or Disposal Facility Reporting	40 CFR 264.75-77 Facilities must submit to the appropriate authorities the following reports: - Biennial reports - Reports of unmainifested wastes - Reports of releases, fires, and explosions - Groundwater monitoring data when contamination is discovered (within 7 days) - Notice of facility closure.	Applicable	Hazardous waste removed from this operable unit must be treated, stored (if more than 90 days), and disposed of in accordance with TSD facility standards.	4, 5

TABLE D-1 (Continued)
FEED MATERIALS PRODUCTION CENTER
FERNALD, OHIO
POTENTIAL ARARs
OPERABLE UNIT 1 ALTERNATIVES

Action Specific

Chemical, Location, or Action	Requirement	ARAR/TBC	Rationale for Implementation	Alternative Number
Treatment, Storage, or Disposal Facility Groundwater Monitoring and Response Requirements	40 CFR 264, Subpart F 40 CFR 264.90 - Applicability Owners or operators of TSD facilities must operate a groundwater monitoring program unless the facility: - is an engineered structure - does not receive or contain liquid wastes or waste containing free liquids - is designed to exclude run on and run off - has inner and outer containment layers enclosing the waste - has leak detection built into each layer - operator will provide for continual operation and maintenance of the leak detection systems during the active life, closure and post closure of the facility.	Applicable	Requirement is applicable to those alternatives where wastes are removed and being placed in new, replacement or expanded hazardous waste disposal facilities to insure hazardous substances are not leaching out to the soil or groundwater.	4, 5

TABLE D-1 (Continued)
FEED MATERIALS PRODUCTION CENTER
FERNALD, OHIO
POTENTIAL ARARs
OPERABLE UNIT 1 ALTERNATIVES

Action Specific

Chemical, Location, or Action	Requirement	ARAR/TBC	Rationale for Implementation	Alternative Number
Treatment, Storage, or Disposal Facility Groundwater Monitoring and Response Requirements (continued)	- will not allow hazardous constituents to migrate beyond the containment layer prior to the end of the post closure period - there is no potential for migration of liquid from the unit to the uppermost aquifer prior to the end of the post closure care period. 40 CFR 264.95 - Point of Compliance The point of compliance is the vertical surface located at the hydraulically downgradient limit of the waste management area that extends down into the uppermost aquifer.			

TABLE D-1 (Continued)
FEED MATERIALS PRODUCTION CENTER
FERNALD, OHIO
POTENTIAL ARARs
OPERABLE UNIT 1 ALTERNATIVES

Action Specific

Chemical, Location, or Action	Requirement	ARAR/TBC	Rationale for Implementation	Alternative Number
Treatment, Storage, or Disposal Facility Groundwater Monitoring and Response Requirements (continued)	40 CFR 264.97 - Groundwater Monitoring Owners and operators of new hazardous waste disposal facilities must conduct a groundwater monitoring program in accordance with 40 CFR 264.97. This must include, if necessary, a detection monitoring program under 40 CFR 264.99 and a corrective action program under 40 CFR 264.100 if a groundwater protection standard is exceeded or if the concentration limits established under 40 CFR 264.94 are exceeded between the compliance point and the downgradient facility property boundary.			

TABLE D-1 (Continued)
FEED MATERIALS PRODUCTION CENTER
FERNALD, OHIO
POTENTIAL ARARs
OPERABLE UNIT 1 ALTERNATIVES

Action Specific

Chemical, Location, or Action	Requirement	ARAR/TBC	Rationale for Implementation	Alternative Number
Closure with No Post-closure Care	40 CFR 264.111 OAC 3745-66-11 General performance standard requires elimination of need for further maintenance and control; elimination of post-closure escape of hazardous waste, hazardous constituents, leachate, contaminated run-off, or hazardous waste decomposition products. 40 CFR 264.114 OAC 3745-66-14 During the partial and final closure, all contaminated equipment, structures and soils must be properly disposed.	Applicable	The alternatives call for removal and disposal in locations other than within the operable unit. Requirement is for disposal of remaining residues after removal. The area from which the wastes were removed must meet health-based levels in order to preclude the requirement for post-closure care and monitoring.	4, 5

TABLE D-1 (Continued)
FEED MATERIALS PRODUCTION CENTER
FERNALD, OHIO
POTENTIAL ARARs
OPERABLE UNIT 1 ALTERNATIVES

Action Specific

Chemical, Location, or Action	Requirement	ARAR/TBC	Rationale for Implementation	Alternative Number
Closure with Waste in Place (See Capping for Additional Associated Requirements)	40 CFR 264.117 through 264.120 OAC 3745-66-17 through 20 Post-closure care must begin after completion of closure and continue for 30 years. During this period, the owner or operator must comply with all post-closure requirements, including maintenance of cover, leachate monitoring and groundwater monitoring.	Applicable	Waste remaining in place after closure requires post-closure care and monitoring to insure elimination of escape of hazardous constituents, leachate, and contaminated run-off.	1, 2, 3

TABLE D-1 (Continued)
FEED MATERIALS PRODUCTION CENTER
FERNALD, OHIO
POTENTIAL ARARs
OPERABLE UNIT 1 ALTERNATIVES

Action Specific

Chemical, Location, or Action	Requirement	ARAR/TBC	Rationale for Implementation	Alternative Number
Container Storage	Containers of RCRA hazardous waste must be: 40 CFR 264.171 OAC 3745-55-70 through -78 • Maintained in good condition; 40 CFR 264.172 • Compatible with hazardous waste to be stored; and 40 CFR 264.173 • Closed during storage (except to add or remove waste). 40 CFR 264.174 Inspect container storage areas weekly for deterioration.	Applicable	These requirements are applicable to alternatives utilizing containers for temporary storage or storage before disposal.	4, 5

TABLE D-1 (Continued)
FEED MATERIALS PRODUCTION CENTER
FERNALD, OHIO
POTENTIAL ARARs
OPERABLE UNIT 1 ALTERNATIVES

Action Specific

Chemical, Location, or Action	Requirement	ARAR/TBC	Rationale for Implementation	Alternative Number
Container Storage (continued)	40 CFR 264.175 Place containers on a sloped, crack-free base, and protect from contact with accumulated liquid. Provide containment system with a capacity of 10 percent of the volume of containers of free liquids. Remove spilled or leaked waste in a timely manner to prevent overflow of the containment system. 40 CFR 264.177 Keep incompatible materials separate. Separate incompatible materials stored near each other by a dike or other barrier. 40 CFR 264.178 At closure, remove all hazardous waste and residues from the containment system, and decontaminate or remove all containers and liners.			

TABLE D-1 (Continued)
FEED MATERIALS PRODUCTION CENTER
FERNALD, OHIO
POTENTIAL ARARs
OPERABLE UNIT 1 ALTERNATIVES

Action Specific

Chemical, Location, or Action,	Requirement	ARAR/TBC	Rationale for Implementation	Alternative Number
Treatment (in a Unit)	40 CFR 264, Subpart J (Tanks) Design and operating standards for tank unit within which hazardous waste is stored or treated.	Applicable	Design criteria and operating standards for tank treatment units is applicable for alternatives utilizing treatment or storage in a tank prior to disposal.	1, 2, 3, 4, 5
	40 CFR 264, Subpart K (Surface Impoundments) Design and operating standards for surface impoundments used to treat or store hazardous waste.		Design and operating standards for surface impoundments is applicable for alternatives utilizing treatment or storage in a surface impoundment prior to disposal.	
	40 CFR 264, Subpart L (Waste Piles) Design and operating standards for waste piles used to store hazardous waste.		Design and operating standards for waste piles is applicable for alternatives utilizing storage in a waste pile prior to treatment or disposal.	

TABLE D-1 (Continued)
FEED MATERIALS PRODUCTION CENTER
FERNALD, OHIO
POTENTIAL ARARs
OPERABLE UNIT 1 ALTERNATIVES

Action Specific

Chemical, Location, or Action	Requirement	ARAR/TBC	Rationale for Implementation	Alternative Number
Construction of Hazardous Waste Disposal Facilities	40 CFR 264.301 Minimum Technology Requirements Install two liners or more, including a top liner that prevents waste migration into the liner, and a bottom liner that prevents waste migration through the liner. Install leachate collection system above and between liners. Construct run-on and run-off control system capable of handling the peak discharge of a 25-year storm. Control wind dispersion of particulates.	Applicable	Requirement is applicable to those alternatives where wastes are removed and being placed in a new, replacement or expanded hazardous waste disposal facility to prevent hazardous substances from being leached into surrounding soil and groundwater.	4

6438

000317

TABLE D-1 (Continued)
FEED MATERIALS PRODUCTION CENTER
FERNALD, OHIO
POTENTIAL ARARs
OPERABLE UNIT 1 ALTERNATIVES

Action Specific

Chemical, Location, or Action	Requirement	ARAR/TBC	Rationale for Implementation	Alternative Number
Capping (See also Closure with Waste in Place for Additional Associated Requirements)	40 CFR 264.310(a) OAC 3745-66-11 Placement of a cap over waste (e.g., closing a landfill, or closing a waste pile as a landfill, or similar action) requires a cover designed and constructed to: • Provide long-term minimization of migration of liquids through capped area; • Function with minimum maintenance; • Promote drainage and minimize erosion or abrasion of the cover; • Accommodate settling and subsidence so that the cover's integrity is maintained; and • Have a permeability less than or equal to the permeability of any bottom liner system or natural subsoils present.	Applicable	Disposal in place or in a landfill will require a cap to prevent migration of waste constituents due to leaching. The requirement is applicable if the wastes contain hazardous constituents, pollutants or contaminants.	1, 2, 3, 4

TABLE D-1 (Continued)
FEED MATERIALS PRODUCTION CENTER
FERNALD, OHIO
POTENTIAL ARARs
OPERABLE UNIT 1 ALTERNATIVES

Action Specific

Chemical, Location, or Action	Requirement	ARAR/TBC	Rationale for Implementation	Alternative Number
Capping (See also Closure with Waste in Place for Additional Associated Requirements) (continued)	40 CFR 264.310 (b) OAC 3745-66-11 • Prevent run-on and run-off from damaging cover. • Protect and maintain surveyed benchmarks used to locate waste cells (landfills, waste piles). • Maintain the integrity and effectiveness of the final cover, including making repairs to the cap as necesary to correct the effects of settling, subsidence, erosion, or other events, monitoring of leachate and groundwater monitoring.			

TABLE D-1 (Continued)
FEED MATERIALS PRODUCTION CENTER
FERNALD, OHIO
POTENTIAL ARARs
OPERABLE UNIT 1 ALTERNATIVES

Action Specific

Chemical, Location, or Action	Requirement	ARAR/TBC	Rationale for Implementation	Alternative Number
Land Disposal Restrictions	40 CFR 268 Generally prohibits the placement of restricted RCRA hazardous wastes in land-based units such as landfills, surface impoundments, waste piles and land treatment facilities, unless: • they have been treated in accordance with technology-based or treatment-based standards specified under 40 CFR 268.40-43; • they remain hazardous but treatment has been waived under a "National Capacity Extension" as specified under 40 CFR 268.30-33 and the receiving unit meets the RCRA Sec. 3004 (O) minimum technology requirements including double liner, leachate collection system and groundwater monitoring;	Applicable	If restricted RCRA wastes are removed from this operable unit they may only be placed in a land disposal unit after they have been treated in accordance with the land disposal treatment requirements or have qualified for a waiver or variance from the treatment requirements.	4, 5

TABLE D-1 (Continued)
FEED MATERIALS PRODUCTION CENTER
FERNALD, OHIO
POTENTIAL ARARs
OPERABLE UNIT 1 ALTERNATIVES

Action Specific

Chemical, Location, or Action	Requirement	ARAR/TBC	Rationale for Implementation	Alternative Number
Land Disposal Restrictions (continued)	• a treatability variance has been set for the waste accordance with 40 CFR 268.44; • an equivalent treatment method petition has been approved where the site manager can demonstrate that another technology can achieve an equivalent measure of performance in accordance with 40 CFR 268.42; • a no-migration petition has been approved in accordance with 40 CFR 268.6; • the site manager can have the waste delisted by demonstrating that the waste does not meet any of the criteria under which the waste was listed and other factors (including additional constituents) would not cause the waste to be hazardous.			

TABLE D-1 (Continued)
FEED MATERIALS PRODUCTION CENTER
FERNALD, OHIO
POTENTIAL ARARs
OPERABLE UNIT 1 ALTERNATIVES

Action Specific

Chemical, Location, or Action	Requirement	ARAR/TBC	Rationale for Implementation	Alternative Number
Slurry Wall	40 CFR 268, Subpart D If the soils excavated for the construction of a slurry wall contain hazardous constituents in concentrations determined to be above health-based protection levels, they must be disposed of properly. If constituents are those that are prohibited from disposal in new land disposal facilities other treatment and disposal will be required.	Applicable	Excavated soils near silos may contain hazardous constituents from silos. Soils will be disposed of with silo contents. Excavated soils for construction of a slurry wall may have to be disposed of with silo contents if contaminated. Degree and extent of contamination, if any, depends on location and close proximity to contaminated area. Requirement is not applicable as waste is not considered solid waste and therefore is not hazardous waste under RCRA.	1, 2

TABLE D-1 (Continued)
FEED MATERIALS PRODUCTION CENTER
FERNALD, OHIO
POTENTIAL ARARs
OPERABLE UNIT 1 ALTERNATIVES

Action Specific

Chemical, Location, or Action	Requirement	ARAR/TBC	Rationale for Implementation	Alternative Number
Land Disposal Restrictions on Storage of Restricted Waste	40 CFR 268.50 The storage of hazardous waste restricted from land disposal under RCRA Section 3004 and 40 CFR 268, Subpart C is prohibited unless: • Wastes are stored in tanks or containers by a generator or the on-site operator of a TSD facility solely for the purpose of accumulation of such quantities as to facilitate proper treatment or disposal. • Generators storing waste under this provision must also comply with 40 CFR 262.34 including the 90-day storage limitation. • TSD facility operators storing waste under this provision must also: - clearly mark each container to identify the contents and the beginning date for accumulation of the waste;	Applicable	Restricted hazardous waste generated or removed from the operable unit may be stored or accumulated prior to treatment, packaging, and disposal if the land disposal accumulation requirements are met.	4, 5

TABLE D-1 (Continued)
FEED MATERIALS PRODUCTION CENTER
FERNALD, OHIO
POTENTIAL ARARs
OPERABLE UNIT 1 ALTERNATIVES

Action Specific

Chemical, Location, or Action	Requirement	ARAR/TBC	Rationale for Implementation	Alternative Number
Land Disposal Restrictions on Storage of Restricted Waste (continued)	- clearly mark each tank with a description of contents, quantity of contents, and beginning accumulation date, or record such information in the facility operating record - comply with operating record requirements under 40 CFR 264.73 • TSD facility operators may store wastes under this provision for up to one year.			

TABLE D-1 (Continued)
FEED MATERIALS PRODUCTION CENTER
FERNALD, OHIO
POTENTIAL ARARs
OPERABLE UNIT 1 ALTERNATIVES

Action Specific

Chemical, Location, or Action	Requirement	ARAR/TBC	Rationale for Implementation	Alternative Number
Ohio Water Well Standards	OAC 3745-9-10 - Abandonment of Test Holes and Wells Upon completion of testing, a test hole or well shall be either completely filled with grout or such material as will prevent contaminants from entering groundwater.	Applicable	Test borings and wells may be installed and/or closed as part of these remedial alternatives.	All

TABLE D-1 (Continued)
FEED MATERIALS PRODUCTION CENTER
FERNALD, OHIO
POTENTIAL ARARs
OPERABLE UNIT 1 ALTERNATIVES

Action Specific

Chemical, Location, or Action	Requirement	ARAR/TBC	Rationale for Implementation	Alternative Number
Control of Fugitive Dust	OAC 3745-17-08 Requires the minimization or elimination of visible emissions of fugitive dust generated during grading, loading, or construction operations and other practices which emit fugitive dust.	Applicable	The implementation of remedial action alternatives will require the movement of dirt and other material likely to result in fugitive dust emissions.	1, 2, 3, 4, 5

TABLE D-1 (Continued)
FEED MATERIALS PRODUCTION CENTER
FERNALD, OHIO
POTENTIAL ARARs
OPERABLE UNIT 1 ALTERNATIVES

Action Specific

Chemical, Location, or Action	Requirement	ARAR/TBC	Rationale for Implementation	Alternative Number
Wastewater Treatment	OAC 3745-31 New wastewater treatment facilities and/or industrial processes which produce process wastewater must meet substantive permitting requirements.	Applicable	FMPC now has a central wastewater treatment facility. The implementation of remedial alternatives will result in new process waste streams which may be incompatible with the existing wastewater treatment facility and which may require the construction and operation of a separate facility to treat those wastes prior to discharge.	1, 2, 3, 4, 5

TABLE D-1 (Continued)
FEED MATERIALS PRODUCTION CENTER
FERNALD, OHIO
POTENTIAL ARARs
OPERABLE UNIT 1 ALTERNATIVES

Action Specific

Chemical, Location, or Action	Requirement	ARAR/TBC	Rationale for Implementation	Alternative Number
Prevention of Air Pollution Nuisance	ORC 3704.03 (E) The Director of Environmental Protection (OEPA) may adopt, modify, and repeal regulations prescribing hazardous or toxic air contaminant limitations and standards for the prevention or control of odors and air pollution nuisances. OAC 3745-15-07 The emission or escape into open air from any source whatsoever in such a manner or in such amounts as to endanger the health, safety, or welfare of the public or to cause unreasonable injury or damage to property shall be declared a public nuisance and is prohibited.	Applicable	During the process of stabilization, or removal and treatment, some potential exists for emissions of radionuclides and toxic chemicals to the air, which could endanger individuals or damage property.	2, 3, 4, 5

TABLE D-1 (Continued)
FEED MATERIALS PRODUCTION CENTER
FERNALD, OHIO
POTENTIAL ARARs
OPERABLE UNIT 1 ALTERNATIVES

Action Specific

Chemical, Location, or Action	Requirement	ARAR/TBC	Rationale for Implementation	Alternative Number
Criteria Relating to the Disposition of Uranium Tailings or Wastes	10 CFR 40, Appendix A Establishes technical and long-term surveillance criteria relating to the siting, operation, decontamination, decommissioning, and reclamation of mills and tailings or waste systems and sites at which such mills and systems are located. These criteria include: • Selection of sites with features which contribute to the goal of permanent isolation of wastes; • Disposal in a manner such that no active maintenance is required to preserve conditions of the site; • Minimization of the number of disposal sites; • Minimization of water and wind erosion potential;	Relevant and Appropriate	Materials within this operable unit are similar to uranium mill tailings and thus have similar health and environmental risks.	1, 2, 3, 4, 5

TABLE D-1 (Continued)
FEED MATERIALS PRODUCTION CENTER
FERNALD, OHIO
POTENTIAL ARARs
OPERABLE UNIT 1 ALTERNATIVES

Action Specific

Chemical, Location, or Action	Requirement	ARAR/TBC	Rationale for Implementation	Alternative Number
Criteria Relating to the Disposition of Uranium Tailings or Wastes (continued)	• General design considerations for above-ground disposal facilities including caps; • Compliance with basic groundwater protection standards imposed by 40 CFR 192, Subparts D and E; • Conduct a preoperational monitoring program to provide complete baseline data on the site and its environs; • Establish a groundwater monitoring program to detect leakage of hazardous constituents and to establish the needed groundwater protection standards; and • Long-term site surveillance with an annual inspection by the government agency retaining ultimate custody of the site.			

TABLE D-1 (Continued)
FEED MATERIALS PRODUCTION CENTER
FERNALD, OHIO
POTENTIAL ARARs
OPERABLE UNIT 1 ALTERNATIVES

Action Specific

Chemical, Location, or Action	Requirement	ARAR/TBC	Rationale for Implementation	Alternative Number
Land Disposal On-Site	10 CFR 61, Subpart C Land disposal facilities must be sited, designed, operated, closed, and controlled after closure so that reasonable assurance exists that exposure to humans are within the limits established in the following performance objectives: • Annual dose equivalent limit of 25 mrem (whole body), 75 mrem (thyroid) and 25 mrem (any other organ) for any member of the public due to radioactive materials which may be released from the land disposal facility. • Protection of any inadvertent intruder into the disposal site at any time after active institutional controls over the disposal site are removed.	Relevant and Appropriate	Facilities which are to be used for on-site land disposal of radioactive materials contained within this operable unit should meet the performance objectives of facilities for similar radioactive materials from NRC-licensed facilities.	4

TABLE D-1 (Continued)
FEED MATERIALS PRODUCTION CENTER
FERNALD, OHIO
POTENTIAL ARARs
OPERABLE UNIT 1 ALTERNATIVES

Action Specific

Chemical, Location, or Action	Requirement	ARAR/TBC	Rationale for Implementation	Alternative Number
Land Disposal On-Site (continued)	• Operations at the disposal facility must be conducted in accordance with 10 CFR 20. • Long-term stability and elimination of the need (to the extent practicable) for ongoing active maintenance of the disposal site following closure so that only surveillance, monitoring, or minor custodial care are required.			

000332

6438

TABLE D-1 (Continued)
FEED MATERIALS PRODUCTION CENTER
FERNALD, OHIO
POTENTIAL ARARs
OPERABLE UNIT 1 ALTERNATIVES

Action Specific

Chemical, Location, or Action	Requirement	ARAR/TBC	Rationale for Implementation	Alternative Number
Land Disposal On-Site	10 CFR 61, Subpart D Technical requirements for land disposal facilities for radioactive waste must be satisfied. These include: • Disposal site suitability requirements for land disposal; • Design criteria for a land disposal site; • Operation and closure criteria; • Environmental monitoring requirements; • Waste classification requirements; and • Waste characteristics requirements.	Relevant and Appropriate	Facilities which are to be used for on-site land disposal of radioactive materials contained within this operable unit should meet the performance objectives of facilities for similar radioactive materials from NRC-licensed facilities.	4

6438

000363

TABLE D-1 (Continued)
FEED MATERIALS PRODUCTION CENTER
FERNALD, OHIO
POTENTIAL ARARs
OPERABLE UNIT 1 ALTERNATIVES

Action Specific

Chemical, Location, or Action	Requirement	ARAR/TBC	Rationale for Implementation	Alternative Number
Discharge of Treatment System Effluent	40 CFR 125.100 Best Management Practices Develop and implement a Best Management Practices (BMP) program to prevent the release of toxic or hazardous constituents to waters of the U.S. 40 CFR 125.104 The BMP program must: • Establish specific procedures for the control of toxic and hazardous pollutant spills and runoff. • Include a prediction of direction, rate of flow, and total quantity of toxic and hazardous pollutants where experience indicates a reasonable potential for equipment failure.	Relevant and Appropriate	All of the proposed actions have the potential for releases and runoff from this operable unit. The requirement is not applicable because BMP under the NPDES permit program applies only to ancillary facilities from manufacturing units that may have releases of toxic or hazardous waste. The purpose of the BMP program is relevant and appropriate to prevent releases from spills or runoff during the implementation of remedial actions.	All

TABLE D-1 (Continued)
FEED MATERIALS PRODUCTION CENTER
FERNALD, OHIO
POTENTIAL ARARs
OPERABLE UNIT 1 ALTERNATIVES

Action Specific

Chemical, Location, or Action	Requirement	ARAR/TBC	Rationale for Implementation	Alternative Number
Cleanup of Land and Buildings Contaminated with Residual Radioactive Materials	40 CFR 192, Subparts B and C Remedial actions shall be conducted at any site, or other real property or improvement thereon containing residual radioactive materials from inactive uranium processing sites so as to provide reasonable assurance that: • Radium-226 concentrations in land averaged over any area of 100 m^2 shall not exceed the background level by more than 5 pCi/g averaged over the first 15 cm of soil below the surface and 15 pCi/g averaged over 15 cm thick layers of soil more than 15 cm below the surface. • Annual average radon decay product concentrations (including background) in any occupied or habitable building shall not exceed 0.02 WL, or in any case it shall not exceed 0.03 WL. • Gamma radiation level in any occupied or habitable building shall not exceed background level by more than 20 μR/hr.	Relevant and Appropriate	Radioactive materials in this operable unit are primarily residues from uranium processing. Requirements for remedial actions should be consistent with design at other uranium processing facilities.	1, 2, 3, 4, 5

TABLE D-1 (Continued)
FEED MATERIALS PRODUCTION CENTER
FERNALD, OHIO
POTENTIAL ARARs
OPERABLE UNIT 1 ALTERNATIVES

Action Specific

Chemical, Location, or Action	Requirement	ARAR/TBC	Rationale for Implementation	Alternative Number
Residual Radioactive Material in Soil	DOE Order 5400.5, Chapter IV Concentrations of residual radioactivity in soil in areas for unrestricted use shall not exceed background concentrations averaged over an area of 100 m^2 by the following: • Generic guidelines for radium-226, radium-228, thorium-230, and thorium-232: a) 5 pCi/g, averaged over the first 15 cm of soil below the surface; and b) 15 pCi/g, averaged over 15-cm-thick layers of soil more than 15 cm below the surface. • For other radionuclides, the residual concentration of the radionuclides in soil shall be derived from the basic dose limit (100 mrem effective dose equivalent per year) by means of an environmental pathway analysis.	To be considered	Radioactive materials in this operable unit could deliver an effective radiation dose exceeding 100 mrem per year if released onto soil in areas for unrestricted use.	1, 2, 3, 4, 5

000336

6438

TABLE D-1 (Continued)
FEED MATERIALS PRODUCTION CENTER
FERNALD, OHIO
POTENTIAL ARARs
OPERABLE UNIT 1 ALTERNATIVES

Action Specific

Chemical, Location, or Action	Requirement	ARAR/TBC	Rationale for Implementation	Alternative Number
Residual Radioactive Material in Soil (continued)	using site specific data where available. Procedures for derivations of residual radioactivity are given in "A Manual for Implementing Residual Radioactive Material Guidelines" (DOE/CH-8901). • Determination of "hot spots" and "hot spot" cleanup limits are contained in DOE Order 5400.5, Chapter IV and DOE/CH/8901. • Explicit formulas for calculating residual concentration guidelines for mixtures are given in DOE/CH-8901. • An exception to the above is that residual radioactive materials above the guidelines shall be managed in accordance with Chapter II of this Order, and the requirements of Section 6 of Chapter IV.			

TABLE D-1 (Continued)
FEED MATERIALS PRODUCTION CENTER
FERNALD, OHIO
POTENTIAL ARARs
OPERABLE UNIT 1 ALTERNATIVES

Action Specific

Chemical, Location, or Action	Requirement	ARAR/TBC	Rationale for Implementation	Alternative Number
Land Disposal On-Site	DOE Order 5820.2A, Chapter III DOE solid low-level wastes shall be managed in accordance with DOE Order 5820.2A, Chapter III and the additional requirements cited therein.	To be considered	Areas within this operable unit contain low-level waste. Disposal of the materials from this operable unit must comply with the low-level waste disposal requirements.	1, 2, 3, 4, 5

TABLE D-1 (Continued)
FEED MATERIALS PRODUCTION CENTER
FERNALD, OHIO
POTENTIAL ARARs
OPERABLE UNIT 1 ALTERNATIVES

Action Specific

Chemical, Location, or Action	Requirement	ARAR/TBC	Rationale for Implementation	Alternative Number
Land Disposal On-Site	DOE Order 5820.2A, Chapter IV DOE waste containing byproduct material shall be stored, stabilized in-place, and/or disposed of consistent with the requirements of the residual radioactive material guidelines contained in 40 CFR 192.	To be considered	Radioactive materials within this operable unit meet the definition of byproduct material (DOE Order 5820.2A, Attachment 1, page 1, paragraph 3) and therefore are to be managed in accordance with DOE requirements for waste containing byproduct materials.	1, 2, 3, 4, 5.

TABLE D-1 (Continued)
FEED MATERIALS PRODUCTION CENTER
FERNALD, OHIO
POTENTIAL ARARs
OPERABLE UNIT 1 ALTERNATIVES

Action Specific

Chemical, Location, or Action	Requirement	ARAR/TBC	Rationale for Implementation	Alternative Number
Residual Radioactive Material as Surface Contamination	U.S. NRC Regulatory Guide 1.86 Surface contamination guidelines for release of equipment and building components for unrestricted use, and if buildings are demolished, for contamination in the ground, shall not be exceeded.	To be considered	Radioactive materials in this operable unit could cause surface contamination levels to exceed the levels specified in the guidelines.	1, 2, 3, 4, 5

TABLE D-1 (Continued)
FEED MATERIALS PRODUCTION CENTER
FERNALD, OHIO
POTENTIAL ARARs
OPERABLE UNIT 1 ALTERNATIVES

Action Specific

Chemical, Location, or Action	Requirement	ARAR/TBC	Rationale for Implementation	Alternative Number
Remediation of Sites Having Radioactive Wastes from Uranium Processing	DOE Plan for Implementing EPA Standards for UMTRA Sites (UMTRA-DOE/AL-163)(January 1984)- Presents direction for implementing EPA standards on uranium mill tailings remedial action sites. DOE Technical Approach Document-Revision II (UMTRA-DOE/AL-050425.0002)(December 1987)- Presents the technical approach for remediation of uranium mill tailings remedial action sites. DOE Remedial Action Planning and Disposal Cell Design (UMTRA-DOE/AL 400503)(January 1989)- Presents direction for complying with the proposed 40 CFR 192 for planning and disposal cell design for uranium mill tailings remedial action sites.	To be considered	Materials within this operable unit have similar chemical and radiological properties as uranium mill tailings. Directions for remediation of mill tailings sites contained within these documents can provide guidance not found in promulgated regulations.	1, 2, 3, 4

000341

6438

TABLE D-1 (Continued)
FEED MATERIALS PRODUCTION CENTER
FERNALD, OHIO
POTENTIAL ARARs
OPERABLE UNIT 1 ALTERNATIVES

Action Specific

Chemical, Location, or Action	Requirement	ARAR/TBC	Rationale for Implementation	Alternative Number
Remediation of Sites Having Radioactive Wastes from Uranium Processing (continued)	DOE Project Surveillance and Maintenance Plan (UMTRA-DOE/AL 350124)- Presents direction for surveillance and maintenance of uranium mill tailings remedial action sites.			

6438

000342

TABLE D-2
DOCUMENTATION OF ARARs
FEED MATERIALS PRODUCTION CENTER
OPERABLE UNIT 1

Chemical-Specific	Alternative 0 No Action	Alternative 2 Non-Removal Physical Stabilization Slurry Wall & Cap	Alternative 4 Removal Sludge Treatment On-Property Disposal	Alternative 5 Removal Sludge Treatment Off-Site Disposal
DOE Order 5400.5				
Uranium	30 ppb derived concentration will not be met, no waiver is justified	30 ppb derived concentration will be met.	See Alternative 2	See Alternative 2
40 CFR 141 National Primary Drinking Regulations				
141.11				
Arsenic	The 0.05 mg/l MCL will be achieved at the boundary of the waste unit.	See Alternative 0	See Alternative 0	See Alternative 0
Barium	The 1.0 mg/l MCL will be achieved at the boundary of the waste unit.	See Alternative 0	See Alternative 0	See Alternative 0
Cadmium	The 0.01 mg/l MCL will be achieved at the boundary of the waste unit at 500 years.	See Alternative 0	See Alternative 0	See Alternative 0

TABLE D-2 (Continued)
DOCUMENTATION OF ARARs
FEED MATERIALS PRODUCTION CENTER
OPERABLE UNIT 1

Chemical-Specific	Alternative 0 No Action	Alternative 2 Non-Removal Physical Stabilization Slurry Wall & Cap	Alternative 4 Removal Sludge Treatment On-Property Disposal	Alternative 5 Removal Sludge Treatment Off-Site Disposal
40 CFR 141 (Continued)				
Chromium	The 0/05 mg/l MCL will be achieved at the boundary of the waste unit.	See Alternative 0	See Alternative 0	See Alternative 0
Lead	The 0.05 mg/l MCL will be achieved at the boundary of the waste unit at 500 years.	See Alternative 0	See Alternative 0	See Alternative 0
Mercury	The 0.002 mg/l MCL will be achieved at the boundary of the waste unit.	See Alternative 0	See Alternative 0	See Alternative 0
Nitrate	The 10.0 mg/l MCL will be achieved at the boundary of the waste unit.	See Alternative 0	See Alternative 0	See Alternative 0
Selenium	The 0.01 mg/l MCL will be achieved at the boundary of the waste unit at 500 years.	See Alternative 0	See Alternative 0	See Alternative 0

000344

6438

TABLE D-2 (Continued)
DOCUMENTATION OF ARARs
FEED MATERIALS PRODUCTION CENTER
OPERABLE UNIT 1

Chemical-Specific	Alternative 0 No Action	Alternative 2 Non-Removal Physical Stabilization Slurry Wall & Cap	Alternative 4 Removal Sludge Treatment On-Property Disposal	Alternative 5 Removal Sludge Treatment Off-Site Disposal
40 CFR 141 (Continued)				
Silver	The 0.05 mg/l MCL will be achieved at the boundary of the waste unit.	See Alternative 0	See Alternative 0	See Alternative 0
40 CFR 141.12				
Chloroform	The 0.1 mg/l MCL will be achieved at the boundary of the waste unit.	See Alternative 0	See Alternative 0	See Alternative 0
Ethylbenzene	The 0.7 mg/l MCL will be achieved at the boundary of the waste unit.	See Alternative 0	See Alternative 0	See Alternative 0
Pentachlorophenol	The 0.2 mg/l MCL will be achieved at the boundary of the waste unit.	See Alternative 0	See Alternative 0	See Alternative 0
PCBs	The 0.0005 mg/l MCl will be achieved at the boundary of the waste unit.	See Alternative 0	See Alternative 0	See Alternative 0

TABLE D-2 (Continued)
DOCUMENTATION OF ARARs
FEED MATERIALS PRODUCTION CENTER
OPERABLE UNIT 1

Chemical-Specific	Alternative 0 No Action	Alternative 2 Non-Removal Physical Stabilization Slurry Wall & Cap	Alternative 4 Removal Sludge Treatment On-Property Disposal	Alternative 5 Removal Sludge Treatment Off-Site Disposal
40 CFR 141.12 (Continued)				
Tetrachloroethylene	The 0.005 mg/l MCL will be achieved at the boundary of the waste unit.	See Alternative 0	See Alternative 0	See Alternative 0
Toluene	The 2.0 mg/l MCL will be achieved at the boundary of the waste unit.	See Alternative 0	See Alternative 0	See Alternative 0
Trichloroethylene	The 0.005 mg/l MCL will be achieved at the boundary of the waste unit.	See Alternative 0	See Alternative 0	See Alternative 0
1,1,1-Trichloroethane	The 0.2 mg/l MCL will be achieved at the boundary of the waste unit.	See Alternative 0	See Alternative 0	See Alternative 0
Xylene	The 10.0 mg/l MCL will be achieved at the boundary of the waste unit.	See Alternative 0	See Alternative 0	See Alternative 0

TABLE D-2 (Continued)
DOCUMENTATION OF ARARs
FEED MATERIALS PRODUCTION CENTER
OPERABLE UNIT 1

Chemical-Specific	Alternative 0 No Action	Alternative 2 Non-Removal Physical Stabilization Slurry Wall & Cap	Alternative 4 Removal Sludge Treatment On-Property Disposal	Alternative 5 Removal Sludge Treatment Off-Site Disposal
40 CFR 141.14				
Gross Alpha Activity	15 pCi/l MCL is achieved at boundary of waste unit.	See Alternative 0	See Alternative 0	See Alternative 0
Ra-226/8	5 pCi/l MCL is achieved at boundary of waste unit.	See Alternative 0	See Alternative 0	See Alternative 0
40 CFR 141.16				
Beta-Gamma Activity	The average concentration in potential drinking water sources will exceed the 4 mrem limit at boundary of the waste unit.	The average concentration in potential drinking water sources will comply with the 4 mrem limit at boundary of the waste unit.	See Alternative 2	See Alternative 2
National Emission Standards for Hazardous Air Pollutants; Radionuclides; 40 CFR 61				
61.102(a) All nuclides except Radon-222	Will comply with 10 mrem limit to the public at boundary of the waste unit.	See Alternative 0	See Alternative 0	See Alternative 0

TABLE D-2 (Continued)
DOCUMENTATION OF ARARs
FEED MATERIALS PRODUCTION CENTER
OPERABLE UNIT 1

Chemical-Specific	Alternative 0 No Action	Alternative 2 Non-Removal Physical Stabilization Slurry Wall & Cap	Alternative 4 Removal Sludge Treatment On-Property Disposal	Alternative 5 Removal Sludge Treatment Off-Site Disposal
40 CFR 61 (Continued)				
61.192 Radon-222	20 pCi/m_2-s emission rate will be complied with at the source as defined in 61.191 (b).	See Alternative 0	See Alternative 0	See Alternative 0
National Ambient Air Quality Standard 40 CFR 50.12 OAC 3745-71	Lead emissions from a major stationary source shall not exceed 1.5 mg/m_3 based on a quarterly average.	See Alternative 0	See Alternative 0	See Alternative 0
Radioactive Materials in the Ohio River and in Receiving Waters OAC 3745-1-32(c)(9)				
Gross alpha particle activity	15 pCi/l limit will be achieved.	See Alternative 0	See Alternative 0	See Alternative 0
Radium-226/8	5 pCi/l limit will be achieved.	See Alternative 0	See Alternative 0	See Alternative 0

TABLE D-2 (Continued)
DOCUMENTATION OF ARARs
FEED MATERIALS PRODUCTION CENTER
OPERABLE UNIT 1

Chemical-Specific	Alternative 0 No Action	Alternative 2 Non-Removal Physical Stabilization Slurry Wall & Cap	Alternative 4 Removal Sludge Treatment On-Property Disposal	Alternative 5 Removal Sludge Treatment Off-Site Disposal
OAC 3745-1-32(c)(9) (Continued)				
Gross beta particle activity	50 pCi/l limit will be achieved.	See Alternative 0	See Alternative 0	See Alternative 0
Radiation Exposures to Workers and the Public				
10 CFR 20				
20.101				
Radiation Exposure of Workers	-------	Worker protection standards limiting radiation exposure to the whole body (1.5 mrem/qtr), extremities (18.75 mrem/qtr), and skin (7.5 mrem/qtr) will be met during and after remediation.	See Alternative 2	See Alternative 2
20.104				
Radiation Exposure of minors	-------	Radiation exposure to minors can be limited to 10% of the adult limits within the restricted area during and after remediation.	See Alternative 2	See Alternative 2

TABLE D-2 (Continued)
DOCUMENTATION OF ARARs
FEED MATERIALS PRODUCTION CENTER
OPERABLE UNIT 1

Chemical-Specific	Alternative 0 No Action	Alternative 2 Non-Removal Physical Stabilization Slurry Wall & Cap	Alternative 4 Removal Sludge Treatment On-Property Disposal	Alternative 5 Removal Sludge Treatment Off-Site Disposal
10 CFR 20 (Continued)				
20.105 Radiation Exposures to individuals in Unrestricted Areas	Radiation exposures to individual in unrestricted areas will exceed the limits of 2 mrem in seven consecutive days, and 500 mrem/yr during periods after loss of security control measures.	Radiation exposures to individual in unrestricted areas will meet the limits of 2 mrem/hr, 100 mrem in seven consecutive days, and 500 mrem/yr during and after the remediation.	See Alternative 2	See Alternative 2
40 CFR 192 **Health and Environmental Protection Standards for Uranium Mill Tailings**				
192.02 Ra-226	The 5 pCi/g concentration in soil in 0-15 cm and 15 pCi/g concentration below the first 15 cm will not be met.	5 pCi/g concentration in soil in 0-15 cm and 15 pCi/g concentration below the first 15 cm will be met.	See Alternative 2	See Alternative 2

TABLE D-2 (Continued)
DOCUMENTATION OF ARARs
FEED MATERIALS PRODUCTION CENTER
OPERABLE UNIT 1

Chemical-Specific	Alternative 0 No Action	Alternative 2 Non-Removal Physical Stabilization Slurry Wall & Cap	Alternative 4 Removal Sludge Treatment On-Property Disposal	Alternative 5 Removal Sludge Treatment Off-Site Disposal
40 CFR 192 (Continued) Radon-222	Rn-222 concentrations will not exceed an annual average re-lease rate of 20 pCi/m_2 or increase concentrations to > 0.5 pCi/l outside the disposal unit.	See Alternative 0	See Alternative 0	See Alternative 0
192.12 (b) Radon Decay Products	Average radon decay products will not exceed 0.02 WL in habitable buildings constructed by intruders after the active institutional control period.	See Alternative 0	See Alternative 0	See Alternative 0
Gamma Radiation	Average gama radiation levels will not exceed 20 R/hr above background in habitable buildings constructed by intruders after the security control period.	See Alternative 0	See Alternative 0	See Alternative 0

000351

6438

TABLE D-2 (Continued)
DOCUMENTATION OF ARARs
FEED MATERIALS PRODUCTION CENTER
OPERABLE UNIT 1

Chemical-Specific	Alternative 0 No Action	Alternative 2 Non-Removal Physical Stabilization Slurry Wall & Cap	Alternative 4 Removal Sludge Treatment On-Property Disposal	Alternative 5 Removal Sludge Treatment Off-Site Disposal
Chemical Reference Dose Guidance Intended to be Protective of Human Health				
Beryllium	The HEAST RfD of 0.005 mg/kg/d will not be exceeded at the boundary of the waste unit.	See Alternative 0	See Alternative 0	See Alternative 0
Manganese	The HEAST RfD of 0.2 mg/kg/d will not be exceeded at the boundary of the waste unit.	See Alternative 0	See Alternative 0	See Alternative 0
Selenium	The HEAST RfD of 0.003 mg/kg/d will not be exceeded at the boundary of the waste unit.	See Alternative 0	See Alternative 0	See Alternative 0
Thallium	The HEAST RfD of 0.0007 mg/kg/d will not be exceeded at the boundary of the waste unit.	See Alternative 0	See Alternative 0	See Alternative 0

000352

6438

TABLE D-2 (Continued)
DOCUMENTATION OF ARARs
FEED MATERIALS PRODUCTION CENTER
OPERABLE UNIT 1

Chemical-Specific	Alternative 0 No Action	Alternative 2 Non-Removal Physical Stabilization Slurry Wall & Cap	Alternative 4 Removal Sludge Treatment On-Property Disposal	Alternative 5 Removal Sludge Treatment Off-Site Disposal
Chemical Reference Dose Guidance Intended to be Protective of Human Health (Continued)				
Vanadium	The HEAST RfD of 0.007 mg/kg/d will not be exceeded at the boundary of the waste unit.	See Alternative 0	See Alternative 0	See Alternative 0
Zinc	The HEAST RfD of 0.2 mg/kg/d will not be exceeded at the boundary of the waste unit.	See Alternative 0	See Alternative 0	See Alternative 0

000353

6438

TABLE D-2 (Continued)
DOCUMENTATION OF ARARs
FEED MATERIALS PRODUCTION CENTER
OPERABLE UNIT 1

Location-Specific	Alternative 0 No Action	Alternative 2 Non-Removal Physical Stabilization Slurry Wall & Cap	Alternative 4 Removal Sludge Treatment On-Property Disposal	Alternative 5 Removal Sludge Treatment Off-Site Disposal
U.S. Fish and Wildlife Coordination Act 16 U.S.C. 661 40 CFR 6				
6.302(a) Wetlands Area	-------	Wetlands will be affected by the rechanneling of Paddys Run to provide sufficient ground area for cap construction. Where practical alternatives exist, the destruction of wetlands should be avoided. Since no practical means exist to allow a modification to the placement of the cap, this requirement is met.	-------	-------
6.302(g) Protection of Fish and Wildlife	-------	Engineering features are included within this alternative which protect fish and wildlife during the structural modification of Paddys Run.	-------	-------

TABLE D-2 (Continued)
DOCUMENTATION OF ARARs
FEED MATERIALS PRODUCTION CENTER
OPERABLE UNIT 1

Location-Specific	Alternative 0 No Action	Alternative 2 Non-Removal Physical Stabilization Slurry Wall & Cap	Alternative 4 Removal Sludge Treatment On-Property Disposal	Alternative 5 Removal Sludge Treatment Off-Site Disposal
Location Standards for Solid Waste Disposal Facilities 40 CFR 257.3-1				
	-------	Placement of fill material for the capping required by this alternative will lie on the flood plain. The facilities in shall not restrict the flow of the base flood, reduce temporary water storage capacity of the flood plain, or result in a release of waste so as to pose a hazard to human health.	See Alternative 2 The EDF will lie in the flood plain. The facilities in shall not restrict the flow of the base flood, reduce temporary water storage capacity of the flood plain, or result in a release of waste so as to pose a hazard to human health.	-------
Protection of Wetlands 40 CFR 258.12				
	-------	The waste pits are not to be located in wetlands.	The EDF will not be located in wetlands.	-------

TABLE D-2 (Continued)
DOCUMENTATION OF ARARs
FEED MATERIALS PRODUCTION CENTER
OPERABLE UNIT 1

Location-Specific	Alternative 0 No Action	Alternative 2 Non-Removal Physical Stabilization Slurry Wall & Cap	Alternative 4 Removal Sludge Treatment On-Property Disposal	Alternative 5 Removal Sludge Treatment Off-Site Disposal
Location Standards for Hazardous Waste Treatment, Storage, or Disposal Facilities				
40 CFR 264.18				
OAC 3745-54-18	-------	This regulation does not apply to this alternative since the FMPC is not located within a 100 year floodplain.	See Alternative 2	-------
Executive Order 11988	-------	The potential adverse effects of capping material in the natural and beneficial values served by the floodplain.	The potential adverse effects of the tumulus in the natural and beneficial values served by the floodplain.	-------
Executive Order 11990 Wetlands Area	-------	See Alternative 2 under 40 CFR 6.302(a).	-------	-------

TABLE D-2 (Continued)
DOCUMENTATION OF ARARs
FEED MATERIALS PRODUCTION CENTER
OPERABLE UNIT 1

Action-Specific	Alternative 0 No Action	Alternative 2 Non-Removal Physical Stabilization Slurry Wall & Cap	Alternative 4 Removal Sludge Treatment On-Property Disposal	Alternative 5 Removal Sludge Treatment Off-Site Disposal
33 CFR 320.2(f) Dredge and Fill	-------	This alternative will meet the requirements of this regulation. The discharge of dredge or fill material from diverting Paddys Run If required in order to have sufficient ground area to cap portions of this operable unit for capping operations will not result in violations to the State Water Quality Standards and applicable toxic effluent standards.	-------	-------

000357

6438

TABLE D-2 (Continued)
DOCUMENTATION OF ARARs
FEED MATERIALS PRODUCTION CENTER
OPERABLE UNIT 1

Action-Specific	Alternative 0 No Action	Alternative 2 Non-Removal Physical Stabilization Slurry Wall & Cap	Alternative 4 Removal Sludge Treatment On-Property Disposal	Alternative 5 Removal Sludge Treatment Off-Site Disposal
Discharge of Treatment System Effluent				
40 CFR 122.41 OAC 3745-33-05 Best Available Technology	-------	This alternative will meet the requirements of this regulation. Discharges will be monitored for the mass, volume and frequency of discharge of each pollutant. Approved test methods will be followed for monitoring waste per 40 CFR 136.1 - 136.4. Discharge permits will be obtained for all off-site discharges.	See Alternative 2	See Alternative 2
40 CFR 122.44(a)	-------	This alternative will meet the requirements of this regulation by use of best available technology during and after remediation and discharges will comply with federal water quality standards.	See Alternative 2	See Alternative 2

TABLE D-2 (Continued)
DOCUMENTATION OF ARARs
FEED MATERIALS PRODUCTION CENTER
OPERABLE UNIT 1

Action-Specific	Alternative 0 No Action	Alternative 2 Non-Removal Physical Stabilization Slurry Wall & Cap	Alternative 4 Removal Sludge Treatment On-Property Disposal	Alternative 5 Removal Sludge Treatment Off-Site Disposal
Discharge of Treatment System Effluent (Continued)				
40 CFR 122.44 OAC 3745-33-04 Water Quality Standards	-------	This alternative will meet the requirements of this regulation. The applicable federally approved state water quality standards will be met. Discharge limitations will be established at more stringent levels than technology-based standards per 40 CFR 122.44(e).	See Alternative 2	See Alternative 2

TABLE D-2 (Continued)
DOCUMENTATION OF ARARs
FEED MATERIALS PRODUCTION CENTER
OPERABLE UNIT 1

Action-Specific	Alternative 0 No Action	Alternative 2 Non-Removal Physical Stabilization Slurry Wall & Cap	Alternative 4 Removal Sludge Treatment On-Property Disposal	Alternative 5 Removal Sludge Treatment Off-Site Disposal
On-Site Solid Non-hazardous Waste Management Facilities				
40 CFR 241.200-201 Facilities	-------	This alternative will comply with the requirements for development of a waste handling plan.	See Alternative 2	See Alternative 2
40 CFR 241.202, 204, 205, 209 and 211 ORC 6111.45 OAC 3745-27 Waste Treatment and Disposal	-------	This alternative will comply with the requirements of these regulations. This alternative was developed to meet the relevant requirements of these regulations.	See Alternative 2	See Alternative 2

000360

6438

TABLE D-2 (Continued)
DOCUMENTATION OF ARARs
FEED MATERIALS PRODUCTION CENTER
OPERABLE UNIT 1

Action-Specific	Alternative 0 No Action	Alternative 2 Non-Removal Physical Stabilization Slurry Wall & Cap	Alternative 4 Removal Sludge Treatment On-Property Disposal	Alternative 5 Removal Sludge Treatment Off-Site Disposal
Hazardous Waste Management System: General 40 CFR 260, Subpart I - Overview of Subtitle Regulations				
40 CFR 261.2, 261.4(a), 261.3, 261.4(b), 260.20, 260.22 Hazardous Waste Determinations	Waste from this operable unit must be characterized for RCRA hazardous constituents in accordance with this process. By following this process, the ARAR will be met.	See Alternative 0	See Alternative 0	See Alternative 0
40 CFR 261 Empty Containers	-------	-------	This alternative will meet the requirements of this regulation. Empty containers which have held hazardous wastes will be emptied to no more than 2.5 cm of residue on the bottom or inner liner, or less than 3% by wt. of the total capacity remaining for less than 110 gals. containers, or less than	See Alternative 4

TABLE D-2 (Continued)
DOCUMENTATION OF ARARs
FEED MATERIALS PRODUCTION CENTER
OPERABLE UNIT 1

Action-Specific	Alternative 0 No Action	Alternative 2 Non-Removal Physical Stabilization Slurry Wall & Cap	Alternative 4 Removal Sludge Treatment On-Property Disposal	Alternative 5 Removal Sludge Treatment Off-Site Disposal
40 CFR 261 (Continued)			0.3% by wt. of total capacity remaining for containers of greater than 110 gals. capacity. No Operable Unit 1 wastes are acutely hazardous ("p" listed) wastes and therefore empty containers do not have to meet the requirements of this classification of waste.	
40 CFR 262.10 Generators Who Treat, Store, or Dispose of Hazardous Waste	-------	-------	This alternative will meet the requirements of this regulation. The "generator" as defined by this regulation, who treats, stores, or disposes of hazardous wastes on-property will determine in accordance with 40 CFR 262.11 if the waste is hazardous, and will obtain a U.S. EPA Identification number in accordance with 40 CFR	-------

TABLE D-2 (Continued)
DOCUMENTATION OF ARARs
FEED MATERIALS PRODUCTION CENTER
OPERABLE UNIT 1

Action-Specific	Alternative 0 No Action	Alternative 2 Non-Removal Physical Stabilization Slurry Wall & Cap	Alternative 4 Removal Sludge Treatment On-Property Disposal	Alternative 5 Removal Sludge Treatment Off-Site Disposal
40 CFR 262.10 (Continued)			262.12 for hazardous waste accumulation, recordkeeping, and additional reporting.	
40 CFR 262.20 and 262.30 Generators Who Transport Hazardous Waste for Off-Site Treatment, Storage or Disposal	-------	-------	-------	This alternative will meet the requirements of this regulation. Hazardous waste removed from this operable unit for off-site disposal are subject to the transportation requirements in accordance with U.S. DOT regulations. Manifests will be prepared and the waste will be packaged, labelled, marked and placarded per the requirements in 40 CFR 262.20 and 262.30.

TABLE D-2 (Continued)
DOCUMENTATION OF ARARs
FEED MATERIALS PRODUCTION CENTER
OPERABLE UNIT 1

Action-Specific	Alternative 0 No Action	Alternative 2 Non-Removal Physical Stabilization Slurry Wall & Cap	Alternative 4 Removal Sludge Treatment On-Property Disposal	Alternative 5 Removal Sludge Treatment Off-Site Disposal
40 CFR 262.34 Waste Accumulation On Property by Generator	-------	-------	This alternative will meet the requirements of this regulation. Hazardous waste removed from this operable unit and waste treatment residues that accumulated for 90 days or less will not require permitting standards for storage facilities. Wastes will be accumulated in appropriate U.S. DOT containers and meet applicable DOT regulations. If accumulation of silo wastes and waste treatment residues exceed 90 days duration, permitting standards for storage facilities will be met.	See Alternative 4

000364

DRAFT

TABLE D-2 (Continued)
DOCUMENTATION OF ARARs
FEED MATERIALS PRODUCTION CENTER
OPERABLE UNIT 1

Action-Specific	Alternative 0 No Action	Alternative 2 Non-Removal Physical Stabilization Slurry Wall & Cap	Alternative 4 Removal Sludge Treatment On-Property Disposal	Alternative 5 Removal Sludge Treatment Off-Site Disposal
40 CFR 262, Subpart D Generator Recordkeeping and Reporting	-------	-------	This alternative will meet the requirements of this regulation. Hazardous waste removed from this operable unit will be documented. Copies of manifests, biennial and exception reports, test results, waste analyses and other determinations made in accordance with 40 CFR 262.11 will be retained for 3 years. Biennial reports will be submitted by March first of each even numbered year. Exception reports will be submitted within 35 days of shipment.	See Alternative 4

000365

6438

TABLE D-2 (Continued)
DOCUMENTATION OF ARARs
FEED MATERIALS PRODUCTION CENTER
OPERABLE UNIT 1

Action-Specific	Alternative 0 No Action	Alternative 2 Non-Removal Physical Stabilization Slurry Wall & Cap	Alternative 4 Removal Sludge Treatment On-Property Disposal	Alternative 5 Removal Sludge Treatment Off-Site Disposal
40 CFR 264, Subpart B General Standards	-------	-------	This alternative will meet the requirements of this regulation. Before hazardous waste is removed from this operable unit for treatment, storage or disposal, a detailed chemical and physical analysis of a representative sample of each hazardous waste will be obtained in accordance with 40 CFR 264.13. Entry of persons or livestock into the active portions of the facility will be controlled in accordance with 40 CFR 264.14.	See Alternative 4

000366

DRAFT

TABLE D-2 (Continued)
DOCUMENTATION OF ARARs
FEED MATERIALS PRODUCTION CENTER
OPERABLE UNIT 1

Action-Specific	Alternative 0 No Action	Alternative 2 Non-Removal Physical Stabilization Slurry Wall & Cap	Alternative 4 Removal Sludge Treatment On-Property Disposal	Alternative 5 Removal Sludge Treatment Off-Site Disposal
40 CFR 264, Subpart B (Continued)			Monitoring, safety and emergency equipment will be inspected routinely. Defects will be reported per 40 CFR 264.15. Facility personnel will be trained in hazardous waste management procedures, including emergency response training, within 6 months of their assumption of duties.	
40 CFR 264, Subpart C Treatment, Storage, or Disposal Facility Preparedness and Prevention	-------	-------	This alternative will meet the requirements of this regulation. TSD operators will design, construct, maintain and operate facilities to contain hazardous waste from threatening human health or the environment.	See Alternative 4

TABLE D-2 (Continued)
DOCUMENTATION OF ARARs
FEED MATERIALS PRODUCTION CENTER
OPERABLE UNIT 1

Action-Specific	Alternative 0 No Action	Alternative 2 Non-Removal Physical Stabilization Slurry Wall & Cap	Alternative 4 Removal Sludge Treatment On-Property Disposal	Alternative 5 Removal Sludge Treatment Off-Site Disposal
40 CFR 264, Subpart C (Continued)			All facilities will be equipped with internal and external communication and fire control equipment in accordance with 40 CFR 264.32. All fire and spill control equipment will be tested and maintained in accordance with 40 CFR 264.33. All personnel will have access to emergency communication or alarm systems when hazardous waste is being handled in the facility per 40 CFR 264.34. Aisle space will be maintained in accordance with 40 CFR 264.35.	

TABLE D-2 (Continued)
DOCUMENTATION OF ARARs
FEED MATERIALS PRODUCTION CENTER
OPERABLE UNIT 1

Action-Specific	Alternative 0 No Action	Alternative 2 Non-Removal Physical Stabilization Slurry Wall & Cap	Alternative 4 Removal Sludge Treatment On-Property Disposal	Alternative 5 Removal Sludge Treatment Off-Site Disposal
40 CFR 264, Subpart C (Continued)			Operators will make emergency response arrangements when hazardous waste is being handled in the facility in accordance with 40 CFR 264.37.	
40 CFR 264, Subpart D Treatment, Storage, or Disposal Facility Contingency Plan and Emergency Procedures	-------	-------	This alternative will meet the requirements of this regulation. Each facility operator will have available a contingency plan to minimize the hazards to human health and the environment in the event of any unplanned releases. Emergency plans will address procedures to implement a response to hazardous substance incidents, internal and external communication, local	See alternative 4

TABLE D-2 (Continued)
DOCUMENTATION OF ARARs
FEED MATERIALS PRODUCTION CENTER
OPERABLE UNIT 1

Action-Specific	Alternative 0 No Action	Alternative 2 Non-Removal Physical Stabilization Slurry Wall & Cap	Alternative 4 Removal Sludge Treatment On-Property Disposal	Alternative 5 Removal Sludge Treatment Off-Site Disposal
40 CFR 264, Subpart D (Continued)			emergency authorities, emergency equipment, and personnel evacuation plan in accordance with 40 CFR 264.52. Each facility will have an emergency coordinator who has the responsibilities and resources to implement the emergency plan in accordance with 40 CFR 264.55.	
40 CFR 264, Subpart E Treatment, Storage, or Disposal Facility Operating Record	-------	-------	This alternative will meet the requirements of this regulation. Operators will maintain records of hazardous waste removed from this operable unit in accordance with TSD facility standards.	See Alternative 4

TABLE D-2 (Continued)
DOCUMENTATION OF ARARs
FEED MATERIALS PRODUCTION CENTER
OPERABLE UNIT 1

Action-Specific	Alternative 0 No Action	Alternative 2 Non-Removal Physical Stabilization Slurry Wall & Cap	Alternative 4 Removal Sludge Treatment On-Property Disposal	Alternative 5 Removal Sludge Treatment Off-Site Disposal
40 CFR 264, Subpart E (Continued)			Operators will maintain a written record at the facility of a description, location and quantity of hazardous waste received, method and date of treatment, inspection and monitoring, and other records and reports in accordance with 40 CFR 264.73. Biennial reports, reports of unmanifested wastes, reports of releases, fires, and explosions, groundwater monitoring data when contamination is discovered, and notice of facility closure will be submitted in accordance with 40 CFR 264.75-77.	

6438

TABLE D-2 (Continued)
DOCUMENTATION OF ARARs
FEED MATERIALS PRODUCTION CENTER
OPERABLE UNIT 1

Action-Specific	Alternative 0 No Action	Alternative 2 Non-Removal Physical Stabilization Slurry Wall & Cap	Alternative 4 Removal Sludge Treatment On-Property Disposal	Alternative 5 Removal Sludge Treatment Off-Site Disposal
40 CFR 264, Subpart F Treatment, Storage, or Disposal Facility Groundwater Monitoring and Response Requirements	-------	-------	This alternative will meet the requirements of this regulation. A groundwater monitoring program will be operated to ensure waste placed in new, replacement or expanded hazardous waste disposal facilities are not leaching out into the soil or groundwater per 40 CFR 264.90. The point of compliance for the groundwater monitoring and response requirements will be in accordance with 40 CFR 264.95. A groundwater monitoring program for new hazardous waste disposal facilities will be conducted in accordance with 40 CFR 264.97.	See Alternative 4

000322

6438

TABLE D-2 (Continued)
DOCUMENTATION OF ARARs
FEED MATERIALS PRODUCTION CENTER
OPERABLE UNIT 1

Action-Specific	Alternative 0 No Action	Alternative 2 Non-Removal Physical Stabilization Slurry Wall & Cap	Alternative 4 Removal Sludge Treatment On-Property Disposal	Alternative 5 Removal Sludge Treatment Off-Site Disposal
40 CFR 264.111 OAC 3745-66.11 Closure with No Post-closure Care	-------	-------	This Alternative will meet he requirements of this regulation. Residues remaining after removal of hazardous waste from this operable unit will meet health-based levels which preclude post-closure care and monitoring. General performance standards shall be in accordance with 40 CFR 264.111 All contaminated equipment, structures and soils will be disposed in accordance with 40 CFR 264.114.	See Alternative 4

TABLE D-2 (Continued)
DOCUMENTATION OF ARARs
FEED MATERIALS PRODUCTION CENTER
OPERABLE UNIT 1

Action-Specific	Alternative 0 No Action	Alternative 2 Non-Removal Physical Stabilization Slurry Wall & Cap	Alternative 4 Removal Sludge Treatment On-Property Disposal	Alternative 5 Removal Sludge Treatment Off-Site Disposal
40 CFR 264.117 through 264.120 OAC 3745-66-17 through 3745-66-20 Closure with Waste in Place	-------	This alternative will meet the requirements of this regulation. Hazardous waste remaining in place after closure will have post-closure care following closure and continue for 30 years in accordance with the requirements of these regulations.	-------	-------
40 CFR 264.171-178 Container Storage	-------	-------	This Alternative will meet the requirements of this regulation. Containers used for hazardous waste temporary storage or storage of before disposal will meet be maintained in good condition per 40 CFR 264.171, be compatible with the waste to be stored in accordance with 264.172, be closed	See Alternative 4

TABLE D-2 (Continued)
DOCUMENTATION OF ARARs
FEED MATERIALS PRODUCTION CENTER
OPERABLE UNIT 1

Action-Specific	Alternative 0 No Action	Alternative 2 Non-Removal Physical Stabilization Slurry Wall & Cap	Alternative 4 Removal Sludge Treatment On-Property Disposal	Alternative 5 Removal Sludge Treatment Off-Site Disposal
40 CFR 264.171-178 (Continued)			during storage per 264.173, be inspected weekly for deterioration per 264.174, stored per 264.175, and keep incompatible materials per 264.177. At closure all hazardous waste and residues will be removed per 264.178.	
40 CFR 264, Subparts J, K, and L Treatment (in a Unit)	-------	-------	This Alternative will meet the requirements of these regulations. Tanks used for treatment or storage of hazardous wastes prior to disposal will meet the requirements in 40 CFR 264, Subpart J. Surface impoundments used for treatment or storage of hazardous waste will meet the requirements of 40 CFR 264, Subpart K. Waste piles used to	See Alternative 4

TABLE D-2 (Continued)
DOCUMENTATION OF ARARs
FEED MATERIALS PRODUCTION CENTER
OPERABLE UNIT 1

Action-Specific	Alternative 0 No Action	Alternative 2 Non-Removal Physical Stabilization Slurry Wall & Cap	Alternative 4 Removal Sludge Treatment On-Property Disposal	Alternative 5 Removal Sludge Treatment Off-Site Disposal
40 CFR 264, Subparts J, K, and L (Continued)			store hazardous wastes prior to disposal will meet the requirements of 40 CFR 264, Subpart L.	
40 CFR 264.301 Construction of Hazardous Waste Disposal Facilities	--------	--------	This alternative will meet the requirements of this regulation. The hazardous waste disposal facility design includes installation of two liners, a leachate collection system above and between the liners, a run-on and run-off control system and wind dispersion control in accordance with the requirements of 40 CFR 264.301.	-------
40 CFR 264.310 (a) OAC 3745-66-11 Capping	-------	This Alternative will meet the requirements of this regulation. Disposal of hazardous wastes in place will require construction of a cap	See Alternative 2	-------

TABLE D-2 (Continued)
DOCUMENTATION OF ARARs
FEED MATERIALS PRODUCTION CENTER
OPERABLE UNIT 1

Action-Specific	Alternative 0 No Action	Alternative 2 Non-Removal Physical Stabilization Slurry Wall & Cap	Alternative 4 Removal Sludge Treatment On-Property Disposal	Alternative 5 Removal Sludge Treatment Off-Site Disposal
40 CFR 264.310 (a) OAC 3745-66-11 (Continued)		designed in accordance with the requirements of these regulations. A multilayer cap with internal drainage layer will be provided. Cap will be sloped to promote drainage and will be covered with vegetation to minimize erosion. The cap will have a clay layer with very low permeability.		
40 CFR 264.310 (b) OAC 3745-66-11 Capping	-------	This alternative will meet the requirements of this regulation. Cap will be sloped and vegetated to control erosion. Surveyor benchmarks will be maintained as long as waste area is controlled. Cap repairs will be made as needed. Leachate groundwater will be monitored.	See Alternative 2	-------

TABLE D-2 (Continued)
DOCUMENTATION OF ARARs
FEED MATERIALS PRODUCTION CENTER
OPERABLE UNIT 1

Action-Specific	Alternative 0 No Action	Alternative 2 Non-Removal Physical Stabilization Slurry Wall & Cap	Alternative 4 Removal Sludge Treatment On-Property Disposal	Alternative 5 Removal Sludge Treatment Off-Site Disposal
40 CFR 268 Land Disposal Restrictions	-------	-------	This alternative will meet the requirements of this regulation. Waste removed from this operable unit may be stored prior to treatment and disposal under the provisions of 40 CFR 262.34 and must comply with the 90 day storage limitation. The requirements of 40 CFR 264.73 must be met for operating records. Wastes may be stored under the provisions of this regulation up to one year.	See Alternative 4

DRAFT

000378

6438

TABLE D-2 (Continued)
DOCUMENTATION OF ARARs
FEED MATERIALS PRODUCTION CENTER
OPERABLE UNIT 1

Action-Specific	Alternative 0 No Action	Alternative 2 Non-Removal Physical Stabilization Slurry Wall & Cap	Alternative 4 Removal Sludge Treatment On-Property Disposal	Alternative 5 Removal Sludge Treatment Off-Site Disposal
40 CFR 268, Subpart D Slurry Wall	-------	This alternative will meet the requirements of this regulation. Excavated soils for construction of a slurry wall will be stabilized and disposed with the waste from this operable unit.	-------	--------

TABLE D-2 (Continued)
DOCUMENTATION OF ARARs
FEED MATERIALS PRODUCTION CENTER
OPERABLE UNIT 1

Action-Specific	Alternative 0 No Action	Alternative 2 Non-Removal Physical Stabilization Slurry Wall & Cap	Alternative 4 Removal Sludge Treatment On-Property Disposal	Alternative 5 Removal Sludge Treatment Off-Site Disposal
Ohio Water Well Standards				
OAC 3745-9-10 Abandonment of Test Holes and Wells	This alternative will meet the requirements of this regulation. Upon completion of testing, test borings and wells will be completely filled to prevent contaminants from entering the groundwater.	See Alternative 0	See Alternative 0	See Alternative 0
Control of Fugitive Dust				
OAC 3745-17-08 Design Considerations	-------	This alternative will meet the requirements of this regulation. Visible emissions of fugitive dust generated during construction operations will be minimized by use of good construction practices developed to meet these requirements.	See Alternative 2	See Alternative 2

TABLE D-2 (Continued)
DOCUMENTATION OF ARARs
FEED MATERIALS PRODUCTION CENTER
OPERABLE UNIT 1

Action-Specific	Alternative 0 No Action	Alternative 2 Non-Removal Physical Stabilization Slurry Wall & Cap	Alternative 4 Removal Sludge Treatment On-Property Disposal	Alternative 5 Removal Sludge Treatment Off-Site Disposal
OAC 3745-31 Wastewater Treatment	-------	This alternative will meet the requirements of this regulation. Wastewater generated due to cap construction will be compatible with the FMPC Central Wastewater Treatment Facility or a new wastewater treatment facility will be required to be constructed and operated to treat these wastewaters prior to discharge.	This alternative will meet the requirements of this regulation. Wastewater generated from removal and treatment facilities for this alternative will be compatible with the FMPC Central Wastewater Treatment Facility or a new wastewater treatment facility will be required to be constructed and operated to treat these wastewaters prior to discharge.	See Alternative 4

000381

TABLE D-2 (Continued)
DOCUMENTATION OF ARARs
FEED MATERIALS PRODUCTION CENTER
OPERABLE UNIT 1

Action-Specific	Alternative 0 No Action	Alternative 2 Non-Removal Physical Stabilization Slurry Wall & Cap	Alternative 4 Removal Sludge Treatment On-Property Disposal	Alternative 5 Removal Sludge Treatment Off-Site Disposal
Prevention of Air Pollution Nuisance				
ORC 3704.03 (E) OAC 3745-15-07	-------	This alternative will meet the requirements of this regulation. Emissions of radionuclides and toxic chemicals will be limited in amounts such that they do not pose a threat to human health or endanger the environment.	See Alternative 2	See Alternative 2

TABLE D-2 (Continued)
DOCUMENTATION OF ARARs
FEED MATERIALS PRODUCTION CENTER
OPERABLE UNIT 1

Action-Specific	Alternative 0 No Action	Alternative 2 Non-Removal Physical Stabilization Slurry Wall & Cap	Alternative 4 Removal Sludge Treatment On-Property Disposal	Alternative 5 Removal Sludge Treatment Off-Site Disposal
10 CFR 40 Appendix A Domestic Licensing of Source Material				
Technical Criterion 1 Siting and Design	-------	This alternative will meet some of the siting criteria (remoteness, minimization of erosion and the requirement of no active maintenance.) This alternative may not meet the criterion on natural isolation of contaminants. It is questionable that Hydrogeologic conditions contribute to continued isolation and immobilization of contaminants from groundwater sources.	See Alternative 2	This alternative will meet the requirements of this regulation by shipment of the hazardous waste to an approved off-site disposal facility.
Technical Criterion 2 Disposal Site Proliferation	-------	This criterion is not met with the in place disposal of waste which would result in multiple disposal locations.	See Alternative 2	This criteria is met by this alternative with the shipment of wastes off-site for disposal.

TABLE D-2 (Continued)
DOCUMENTATION OF ARARs
FEED MATERIALS PRODUCTION CENTER
OPERABLE UNIT 1

Action-Specific	Alternative 0 No Action	Alternative 2 Non-Removal Physical Stabilization Slurry Wall & Cap	Alternative 4 Removal Sludge Treatment On-Property Disposal	Alternative 5 Removal Sludge Treatment Off-Site Disposal
10 CFR 40 Appendix A (Continued)				
Technical Criterion 3 Waste Placement	-------	The below grade disposal criterion is met by this alternative. Below grade disposal may not be the most environmentally sound disposal due to the proximity to the surface of the Great Miami Aquifer.	The below grade disposal criterion is met by this alternative.	-------
Technical Criterion 4 Disposal Technical Requirements	-------	The technical requirements for minimizing erosion, wind protection, self sustaining cover, fault avoidance and runoff sediment control are met by this alternative.	See Alternative 2	-------
Technical Criterion 5 Closure Requirements	-------	This requirement applies only up to closure and not post-closure. All substantive requirements of this criterion are met by this alternative.	See Alternative 2	See Alternative 2

000384

6438

TABLE D-2 (Continued)
DOCUMENTATION OF ARARs
FEED MATERIALS PRODUCTION CENTER
OPERABLE UNIT 1

Action-Specific	Alternative 0 No Action	Alternative 2 Non-Removal Physical Stabilization Slurry Wall & Cap	Alternative 4 Removal Sludge Treatment On-Property Disposal	Alternative 5 Removal Sludge Treatment Off-Site Disposal
10 CFR 40 Appendix A (Continued)				
Technical Criterion 6 Disposal of Byproduct Materials	-------	This Alternative meets the substantive requirements of this criterion. Disposal system performance reasonably can be assured.	See Alternative 2	-------
Technical Criterion 7 Monitoring Program	-------	A monitoring system to confirm compliance with Technical Criterion 5B is implemented in this alternative.	See Alternative 2	See Alternative 2

TABLE D-2 (Continued)
DOCUMENTATION OF ARARs
FEED MATERIALS PRODUCTION CENTER
OPERABLE UNIT 1

Action-Specific	Alternative 0 No Action	Alternative 2 Non-Removal Physical Stabilization Slurry Wall & Cap	Alternative 4 Removal Sludge Treatment On-Property Disposal	Alternative 5 Removal Sludge Treatment Off-Site Disposal
10 CFR 61 Land Disposal of Radioactive Waste				
Subpart C	-------	This alternative meets the substantive siting requirements of this regulation; protection of the population from releases resulting in annual dose exceeding 25 mrem whole body, 75 mrem to the thyroid, and 25 mrem to any other organ; protection of the inadvertent intruder; and site stability requirements.	See Alternative 2	--------
Performance Objectives				

TABLE D-2 (Continued)
DOCUMENTATION OF ARARs
FEED MATERIALS PRODUCTION CENTER
OPERABLE UNIT 1

Action-Specific	Alternative 0 No Action	Alternative 2 Non-Removal Physical Stabilization Slurry Wall & Cap	Alternative 4 Removal Sludge Treatment On-Property Disposal	Alternative 5 Removal Sludge Treatment Off-Site Disposal
10 CFR 61 (Continued)				
Subpart D	-------	-------	This alternative meets the requirements of this regulation. The land disposal facility is an engineered disposal facility.	-------
Technical Requirements for Land Disposal Facilities				

000387

6438

TABLE D-2 (Continued)
DOCUMENTATION OF ARARs
FEED MATERIALS PRODUCTION CENTER
OPERABLE UNIT 1

Action-Specific	Alternative 0 No Action	Alternative 2 Non-Removal Physical Stabilization Slurry Wall & Cap	Alternative 4 Removal Sludge Treatment On-Property Disposal	Alternative 5 Removal Sludge Treatment Off-Site Disposal
40 CFR 125.100 and 125.104 Discharge of Treatment System Effluent	This regulation implements a Best Management Practices program to prevent release of toxic or hazardous constituents to U.S. waters. Since this alternative does not restrict releases, it does not meet the intent of this regulation.	This alternative will meet the requirements of this regulation. A Best Management Practices program will be implemented to prevent releases of toxic or hazardous constituents to U.S. waters. Procedures will be established for the control of spills and will include a prediction of direction, flow rate, and total quantity of pollutants.	See Alternative 2	Alternative 2
40 CFR 192, Subparts B and C Cleanup of Land and Buildings Contaminated with Residual Radioactive Materials	-------	This alternative will meet the requirements of this regulation. The cap will provide reasonable assurance that Radium-226 concentrations in land averaged over any area of 100 square meters shall not exceed	See Alternative 2	-------

TABLE D-2 (Continued)
DOCUMENTATION OF ARARs
FEED MATERIALS PRODUCTION CENTER
OPERABLE UNIT 1

Action-Specific	Alternative 0 No Action	Alternative 2 Non-Removal Physical Stabilization Slurry Wall & Cap	Alternative 4 Removal Sludge Treatment On-Property Disposal	Alternative 5 Removal Sludge Treatment Off-Site Disposal
40 CFR 192, Subparts B and C (Continued)		background levels by more than 5 pCi/g averaged over the first 15 cm of soil below the surface and 15 Pci/g averaged over 15 cm thick layers of soil more than 15 cm below the surface; annual average radon decay product concentrations in any occupied or habitable building will not exceed 10.2 WL; gamma radiation level in any building will not exceed background level by more than 20 R/hr.		

TABLE D-2 (Continued)
DOCUMENTATION OF ARARs
FEED MATERIALS PRODUCTION CENTER
OPERABLE UNIT 1

Action-Specific	Alternative 0 No Action	Alternative 2 Non-Removal Physical Stabilization Slurry Wall & Cap	Alternative 4 Removal Sludge Treatment On-Property Disposal	Alternative 5 Removal Sludge Treatment Off-Site Disposal
DOE Order 5400.5, Chapter IV Residual Radioactive Material in Soil	--------	This alternative will meet the requirements of this regulation. The cap will provide reasonable assurance that Radium-226/8 and Thorium-230/2 the concentration in soil averaged over any area of 100 square meters shall not exceed background levels by more than 5 pCi/g averaged over the first 15 cm of soil below the surface and 15 pCi/g averaged over 15 cm thick layers of soil more than 15 cm below the surface; for other radionuclides, the concentration is based on a dose limit of 100 mrem EDE/yr as determined by pathways analysis.	See Alternative 2	See Alternative 2

TABLE D-2 (Continued)
DOCUMENTATION OF ARARs
FEED MATERIALS PRODUCTION CENTER
OPERABLE UNIT 1

Action-Specific	Alternative 0 No Action	Alternative 2 Non-Removal Physical Stabilization Slurry Wall & Cap	Alternative 4 Removal Sludge Treatment On-Property Disposal	Alternative 5 Removal Sludge Treatment Off-Site Disposal
DOE Order 5820.2A, Chapter III Land Disposal On-Site	-------	This alternative will meet the land disposal requirements of this order through the use of engineered features.	This alternative will meet the land disposal requirements of this order through the use of an engineered disposal facility.	-------
DOE Order 5820.2A, Chapter IV Land Disposal of Radioactive Waste	-------	This alternative will meet the land disposal requirements of this order through the use of engineered features.	This alternative will meet the land disposal requirements of this order through the use of an engineered disposal facility.	This alternative will meet the land disposal requirements of this order by shipment of by-product materials to an approved disposal facility.
U.S. Nuclear Regulatory Commission				
Regulatory Guide 1.86 Radioactive Surface Contamination	--------	Equipment, materials and buildings released for unrestricted use will meet the residual surface contamination guidelines contained in this guide.	See Alternative 2	See Alternative 2

TABLE D-2 (Continued)
DOCUMENTATION OF ARARs
FEED MATERIALS PRODUCTION CENTER
OPERABLE UNIT 1

Action-Specific	Alternative 0 No Action	Alternative 2 Non-Removal Physical Stabilization Slurry Wall & Cap	Alternative 4 Removal Sludge Treatment On-Property Disposal	Alternative 5 Removal Sludge Treatment Off-Site Disposal
DOE Plan for Implementing EPA Standards for UMTRA Sites, DOE Technical Approach Document Revision II, DOE Remedial Action Planning and Disposal Cell Design, and DOE Project Surveillance and Maintenance Plan Remediation of Sites Having Radioactive Wastes from Uranium Processing	-------	These DOE directions for remediation of mill tailings sites may provide guidance for implementing EPA regulations. Materials within this operable unit and the on property disposal associated with this alternative make these DOE directions appurtenant for consideration.	See Alternative 2	-------

APPENDIX
E

DRAFT

APPENDIX E

PACKAGING/TRANSPORTATION

PACKAGING/TRANSPORTATION

The U.S. Department of Transportation (DOT) in Title 49 Code of Federal Regulations (CFR) Part 173 provides a number of general categories under which radioactive material may be shipped. Within the possible shipping designations allowed in the DOT regulations, there are four that could apply to the waste in Pits 1 through 6, the Burn Pit, and Clearwell of Operable Unit 1 with certain restrictions:

- Limited quantities
- Low-specific activity (LSA) material
- Type A package quantities
- Type B package quantities

Under each of these categories, Operable Unit 1 waste would be specified as "normal form" because they would not have been tested to meet the requirements of 49CFR173.469 (tests for special form radioactive materials).

Transportation

Transportation to an off-site disposal facility will be by direct rail transport or rail transport with a truck transfer station near the disposal facility. The shipping capacities are listed in Table B.3-1 of Appendix B. Risks associated with each form of transportation are also included in Appendix B.

Limited Quantities

Limited quantities of radioactive material is a designation for shipping the least restricted articles and the smallest quantities of radioactive material. Generally, items such as radioactive watches, clocks, and smoke detectors are shipped under this category. Although the residue could be made to conform to the restrictions of this classification, it would not be practical. This classification places a restriction on the activity level allowed in each shipping container. Due to the radiological constituents of the waste, the number of containers required to satisfy the activity level would be prohibitive in regards to the logistics of inventory and accounting.

LSA Material

The advantage to shipping radioactive material as LSA is to gain exemptions from using specification packaging (i.e., Type A, Type B, etc.). Whereas the other packaging and shipping

DRAFT

classifications place a limit on the curie content of a package, the LSA classification places a limit on the specific activity of each package.

There are several subparts to the definition of LSA material, two of which may apply to the waste. The waste material may meet the definition of 40CFR173.403(n)(1) (definitions) as "Uranium or thorium ores and physical or chemical concentrates of those ores." However, if it should be decided that these residues are not ores or ore concentrates, they would have to meet the restrictions of 40CFR173.403(n)(4), (definitions) which state: "Material in which the radioactivity is essentially uniformly distributed and in which the estimated average concentration of contents does not exceed:

(i) 0.0001 millicuries per gram of radionuclides for which the A_2 quantity is not more than 0.05 curie;
(ii) 0.005 millicuries per gram of radionuclides for which the A_2 quantity is more than 0.05 curie, but not more than 1 curie; or
(iii) 0.3 millicuries per gram of radionuclides for which the A_2 quantity is more than 1 curie."

(Note: A_2 is the maximum activity of normal form radioactive material permitted in a Type A package)

To apply this second definition, it must be noted that 40CFR173.433(b)(3) (requirements for determination of A_1 and A_2 values for radionuclides) states that "In the case of a mixture of different radionuclides, where the identity and activity of each radionuclide are known, the permissible activity of each radionuclide R_1, R_2, ... R_n must be such that $F_1 + F_2 ... + F_n$ is not greater than unity, when:

$$F_1 = \frac{\text{Total activity of } R_1}{A_i(R_1)}$$

$$F_2 = \frac{\text{Total activity of } R_2}{A_i(R_2)}$$

$$F_n = \frac{\text{Total activity of } R_n}{A_i(R_n)}$$

Where $A_i(R_1, R_2 ... R_n)$ is the value of A_1 or A_2 as appropriate for the nuclide R_1, R_2, ... R_n."

(Note: A_1 is the maximum activity of special form radioactive material permitted in a Type A package)

Applying this information to Operable Unit 1 suggests that the radionuclides in the decay chain present in the waste would have to be divided into three categories: those with an A_2 value equal to or less than 0.05 curie, those with an A_2 value greater than 0.05 but not more than 1 curie, and those with an A_2 value greater than 1 curie. Based on present information, the radionuclides in the waste pits are mainly from the U-238 decay chain and fall into the categories just mentioned. The waste is estimated to require 741,000 packages.

Type A Package

The waste of Operable Unit 1 could be shipped in Type A packaging which requires that the activity level in each package not exceed the A_2 value for the radionuclide of concern. The design and performance specifications for Type A packaging are listed in 49CFR173.411 (general design requirements) and 412 (additional design requirements for Type A packages). Type A packages are designed to more stringent requirements than LSA packages and are typically used for the packaging of materials with greater levels of radioactivity. Type A containers are generally more expensive than LSA containers.

Due to the activity levels of the waste, the package activity level restrictions for Type A packages, and the logistics for storing and accounting, the number of packages required will be prohibitive.

Type B Package

Type B packaging is required for all waste that exceeds Type A packaging requirements. The design and performance requirements for Type B packages are listed in 49CFR173.411 (general design requirements) and 10CFR71.51 (additional requirements for Type B packages). Type B packaging is constructed to much higher standards than either Type A or LSA packaging; therefore, it is much more expensive.

Generally, shipments of Type B quantities are made in a primary disposable container that is placed in a Type B overpack for transportation purposes only. The main advantages to Type B shipments are the use of larger containers and less risk during shipment because of the higher grade of the packaging. The main disadvantages are cost and obtaining Type B overpacks. The waste can be shipped in Type B containers.

APPENDIX
F

DRAFT

APPENDIX F

DETAILED COST ESTIMATES

FERNALD PROJECT

11/26/90

I. T.PROJECT NO.:503317 OP.UNIT #1

ESTIMATOR: F.H.GASLIGHTWALA

BATCH PLANT -ON SITE DISPOSAL-OPTION 4A.

PROJ.ENGR:SCOTT McCOMB

TYPE OF ESTIMATE:-50% -+50%

PROJ. MGR.DAVID HARMER

FY 91-1 DOLLARS

DESCRIPTION	Qty.	Unit	MAT'L $/UNIT	MAN-HRS /UNIT	TOTAL MAN-HR	$/HR	$ MATERIAL	$ LABOR	1ST OR 2ND TIER OR EQUP. RNTL	TOTAL COST
MOBILE UNIT 150 CU.YD. BATCH PLANT	1	EA	$135,000	120	120	$27.12	$135,000	$3,254		$138,254
EXTRA DUST CONTROL EQUIPMENT	1	EA	$13,000	32	32	$27.12	$13,000	$868		$13,868
HIGH ENERGY 150 CU. YD./HR. MIXER	1	EA	$150,000	60	60	$27.12	$150,000	$1,627		$151,627
STORAGE TANK FOR SLURRY,15,000 GALLONS.	2	EA	-	224	448	-			$400,000	$400,000
ELECTRICAL CONNECTIONS	1	LS	$5,000	60	60	$24.74	$5,000	$1,484		$6,484
WATER CONNECTIONS	1	LS	$2,000	60	60	$27.12	$2,000	$1,627		$3,627
FOUNDATIONS FOR SLURRY TANK (#12)	2	LS	$30,000	120	240	$24.41	$60,000	$5,858		$65,858
FOUNDATIONS FOR SILOS(#12)	2	LS	$20,000	80	160	$24.41	$40,000	$3,906		$43,906
ASH & CEMENT TRANSFER STATION w/ PIPING(SUBCONTRACT.PRI	1	LS	-	-	480	-			$879,000	$879,000
FORKLIFT TRUCKS-9 TONS CAPACITY	2	EA	$70,000	32	64	$26.73	$140,000	$1,711		$141,711
TRACTOR TRAILER TRUCKS, 20 TONS w/40 FT. FLAT BEDS	4	EA	$79,000	16	64	$26.73	$316,000	$1,711		$317,711
CHILLER-129 TONS AIR COOLED	1	EA	$60,000	60	60	$26.73	$60,000	$1,604		$61,604
AIR HANDLER 51,600 C.F.M. w ELECTRIC HEAT 7,000,000 B.T.U	1	EA	$25,000	40	40	$27.12	$25,000	$1,085		$26,085
PUMPS CHILLED WATER 420 G.P.M. @ 50' HD	2	EA	$2,500	32	64	$27.12	$5,000	$1,736		$6,736
PUMPS CONDENSING WATER 360 G.P.M. @ 40' HD	2	EA	$2,500	32	64	$27.12	$5,000	$1,736		$6,736
PIPING-6" CHILLED WATER w/ INSULATION	400	FT.	$27.54	0.92	367	$27.12	$11,016	$9,953		$20,969
PIPING-6" CONDENSING WATER w/ INSULATION	300	FT.	$27.54	0.92	275	$27.12	$8,262	$7,458		$15,720
DUCTWORK	51,600	LBS	0.30	0.19	9,804	$23.46	$25,800	$230,002		$255,802
INSULATION FOR THIS DUCTWORK	40,000	SFT	1.25	0.11	4,240	$27.63	$50,000	$117,151		$167,151
ADDITIONAL FANS TO MAKE-UP VENTILATION, 75,000 C.F.M	4	EA	$10,000	48	192	$23.46	$40,000	$4,504		$44,504
CONTROLS FOR ABOVE SYSTEM	1	LS	$15,000	60	60	$27.74	$15,000	$1,664		$16,664
MISCELANEOUS DAMPERS, LOUVERS	1	LS	$7,000	60	60	$23.46	$7,000	$1,408		$8,408
TRANSFER FACILITY: AT BATCH PLANT	1	LS		-	-		-	-		-
FABRIC ARCH STRUCTURE,50'WIDTH X 50FT.LOTH.X24'HT.	1	EA	$40,000	96	96	$24.41	$40,000	$2,343		$42,343
FREIGHT COSTS FOR 50'WX 50'L X 24'H	1	EA	$603	-	-	-	$603			$603
SCAFFOLDING FOR THIS STRUCTURE	1	LS	$200	16	16	$24.41	$200	$391		$591
SUPERVISOR FOR THIS STRUCTURE	1	LS	-	16	16	-			$1,000	$1,000
SLIDING DOOR, 14'X9'-6" FOR THIS STRUCTURE	2	EA	INCL.	16	32	$24.41		$781		$781
REINFORCED CONCRETE SLAB	62	CY	$50	0.492	31	$24.41	$3,100	$757		$3,857
SODIUM VAPOR LAMP, 400 WATTS, HIGH PRESSURE, 3 PHASE	2	EA	$5,380	28	56	$24.74	$10,760	$1,385		$12,145
ELECTRICAL WIRING, CONDUIT FOR THIS LIGHTS (SUBCONTR.)	1	LS	-	140	140	-			$5,000	$5,000
OROUT PLANT:	1	LS		-	-		-	-	-	-
FABRIC ARCH STRUCTURE,120'WIDTH X 100FT.LOTH.X58'HT.	1	EA	$225,000	160	160	$24.41	$225,000	$3,906		$228,906
FREIGHT COSTS FOR 120'W X 100'L X 58'H	1	EA	$2,897	-	-	-	$2,897			$2,897
SCAFFOLDING FOR THIS STRUCTURE	1	LS	$200	16	16	$24.41	$200	$391		$591
SUPERVISOR FOR THIS STRUCTURE	1	LS		16	16	$24.41			$1,000	$1,000
PERSONNEL & EQUPT. SERVICE ENTRANCE, 20'X20'X20'w/8'-4"HT	1	EA	INCL.	32	32	$24.41		$781		$781
WIDTH SINGLE SLIDE DOOR.	-	-	-	-	-	-	-	-	-	-
REINFORCED CONCRETE SLAB	296	CY	$50	0.492	146	$24.41	$14,800	$3,564		$18,364
SODIUM VAPOR LAMP, 400 WATTS, HIGH PRESSURE, 3 PHASE	7	EA	$5,380	28	196	$24.74	$37,660	$4,849		$42,509
ELECTRICAL WIRING, CONDUIT FOR THIS LAMPS (SUBCONTR.)	1	LS	-	490	490	-			$17,500	$17,500
SUMPS-9'X4' w/LINER, HIGH DENSITY POLYETHYLENE	6	EA	$2,700	32	192	$24.41	$16,200	$4,687		$20,887
REINFORCED CONC. FOOTINGS, $0.25 SQ. FT.-12" THICK	1,120	CY	$200	0.400	448	$24.41	$224	$206		$430
SLIDING DOORS:, 14' X9'-6" FOR STRUCTURE	1	EA	INCL	16	16	$24.41		$391		$391
SUB-TOTAL					18,673		$1,464,722	$424,779	$1,303,500	$3,193,001

FERNALD PROJECT

11/26/90

I. T.PROJECT NO.:503317 OP.UNIT #1

ESTIMATOR: F.H.GASLIGHTWALA

BATCH PLANT -ON SITE DISPOSAL-OPTION 4A.

PROJ.ENGR:SCOTT McCOMB

TYPE OF ESTIMATE:-30%--50%

PROJ. MGR.DAVID HARMER

FY 91-1 DOLLARS

DESCRIPTION	Qty.	Unit	MAT'L $/UNIT	MAN-HRS /UNIT	TOTAL MAN-HR	$/HR	$ MATERIAL	$ LABOR	1ST OR 2ND TIER OR EQUP. RNTL	TOTAL COST
CARRYOVER FROM PREVIOUS PAGE					18,673		$1,464,722	$424,779	$1,303,500	$3,195,001
RAW MATERIALS STORAGE FACILITY:	1	LS		-	-		-	-	-	-
PRE-ENGINEERED BLDG.70'X70'X30'EAVES HT.w/BUTLERRIB, DOU	1	EA	-	-	60				$118,000	$118,000
SLIDE DOOR14'-4"X18' & BUTLERRIB II WALL PANELS, 26GA. &	-	-	INCL.	-	-		-	-	-	-
BUTLERRIB II ROOF SYSTEM-26 GA.	-	-	INCL.	-	-		-	-	-	-
REINFORCED CONCRETE SLAB	121	CY	$50	0.492	60	$24.41	$6,050	$1,465	-	$7,515
SODIUM VAPOR LAMP, 400 WATTS, HIGH PRESSURE, 3 PHASE	3	EA	$3,380	28	84	$24.74	$16,140	$2,078		$18,218
ELECTRICAL WIRING, CONDUIT FOR THIS LAMPS (SUBCONTRACT)	1	LS	-	210	210	-			$7,500	$7,500
MISCELLANEOUS ITEMS:	1	LS		-	-		-	-	-	-
REINFORCED CONCRETE APRON (OUTSIDE TRANSFER FACILITY)	49	CY	$50	0.327	16	$24.41	$2,444	$391	-	$2,835
REINFORCED CONCRETE APRON (OUTSIDE RAW MATERIAL STOR	34	CY	$50	0.327	12	$24.41	$1,711	$293	-	$2,004
SUBTOTAL THIS PAGE	1	LS			19,115		$1,491,067	$429,006	$1,429,000	$3,349,073
PRODUCTIVITY FACTOR(17% ADD TO MANHOURS & DOLLARS), (#					3,250	$27.12		$88,140	$242,930	$331,070
RENTAL EQUIPMENT MANHOURS					3,001	$26.73		$80,217	$120,040	$200,257
TOTAL	1	LS			25,366		$1,491,067	$597,363	$1,791,970	$3,880,400

DRAFT

FERNALD PROJECT

11/26/90

I. T.PROJECT NO.:903317 OP.UNIT #1

ESTIMATOR: F.H.GASLIGHTWALA

BATCH PLANT -ON SITE DISPOSAL-OPTION 4A.

PROJ.ENGR:SCOTT McCOMB

TYPE OF ESTIMATE:-10%-+30%

PROJ. MGR.DAVID HARMER

FY 91-1 DOLLARS

DESCRIPTION	Qty.	Unit	MAT'L $/UNIT	MAN-HRS /UNIT	TOTAL MAN-HR	$/HR	$ MATERIAL	$ LABOR	1ST OR 2ND TIER OR EQUP. RNTL	TOTAL COST
CARRYOVER FROM PREVIOUS PAGE					25,366		$1,491,067	$597,363	$1,791,970	$3,880,400
SMALL TOOLS (3% OF TOTAL COSTS)	1	LS			-				$116,412	$116,412
CLEAN UP LABOR (3% OF TOTAL COSTS)	1	LS			5,296				$116,412	$116,412
TEMP. SERV. & FAC. (5% OF TOTAL COSTS)	1	LS							$194,020	$194,020
FIELD STAFF (4% OF TOTAL COSTS)	1	LS			8,169				$155,216	$155,216
SCAFFOLDING (2% OF TOTAL COSTS)	1	LS			3,119				$77,608	$77,608
SUBTOTAL PROJECT COSTS					41,950		$1,491,067	$597,363	$2,451,638	$4,540,068
HEALTH PHYSICS (20% OF LABOR & S/C COSTS) (#2)					12,196			$119,473	$490,328	$609,800
SALES TAX (5.5% OF MATERIAL COSTS)							$82,009	-	-	$82,009
SUBTOTAL					54,146		$1,573,076	$716,836	$2,941,966	$5,231,877
CERCLA REQMTS & PERSONNEL PROTECTION(12% OF TOTAL COS					5,854		$188,769	$86,020	$353,036	$627,825
BOND(3%)							$47,192	$21,505	$88,259	$156,956
SUBTOTAL					60,001		$1,809,037	$824,361	$3,383,261	$6,016,658
MARKUP BY GENERAL CONTRACTOR ON 2ND & 3RD TIER CONTR.									$169,163	$169,163
PROFIT OF PRIME CONTRACTOR (20%) (#5)							$361,807	$164,872	-	$526,679
SUBTOTAL					60,001		$2,170,844	$989,233	$3,552,424	$6,712,500
CONSTRUCTION MANAGEMENT FEE (24% OF TOTAL COSTS) (#6)							$521,003	$237,416	$852,582	$1,611,001
SUBTOTAL					60,001		$2,691,847	$1,226,649	$4,405,006	$8,323,501
FSAR (SAFETY REPORT),(3% OF LABOR & S/C COSTS BEFORE FEES)					1,363			$29,677	$106,573	$136,250
EMISSIONS MODELING,(3% OF TOTAL COST BEFORE FEES)					2,014		$63,125	$29,677	$106,573	$201,375
PROJ.MGMT -WMCO- (8%OF COSTS EXCL. RUST FEE)							$173,668	$79,139	$284,194	$537,001
ENGINEERING (20% (TITLE 1 & 2) OF COST EXCL ALL FEES)					13,423		$434,169	$197,847	$710,485	$1,342,501
SUBTOTAL					76,802		$3,364,809	$1,562,989	$5,612,831	$10,540,628

DRAFT

FERNALD PROJECT

11/26/90

I. T.PROJECT NO.:303317 OP.UNIT #1

ESTIMATOR: F.H.GASLIGHTWALA

BATCH PLANT -ON SITE DISPOSAL-OPTION 4A.

PROJ.ENGR:SCOTT McCOMB

TYPE OF ESTIMATE:-50%→50%

PROJ. MGR.DAVID HARMER

FY 91-1 DOLLARS

DESCRIPTION	Qty.	Unit	MAT'L $/UNIT	MAN-HRS /UNIT	TOTAL MAN-HR	RATE	$ MATERIAL	$ LABOR	1ST OR 2ND TIER EQUP. RNTL	TOTAL COST
CARRY FORWARD					76,802		$3,364,809	$1,562,989	$5,612,831	$10,540,628
DECONTAMINATE & DISASSEMBLE SYSTEM					1,600		-	-	$160,000	$160,000
SUBTOTAL COSTS					78,402	-	$3,364,809	$1,562,989	$5,772,831	$10,700,628
CONTINGENCY 25%						-	$841,202	$390,747	$1,443,208	$2,675,157
TOTAL ESTIMATED COSTS					78,402	-	$4,206,011	$1,953,736	$7,216,038	$13,375,785
ESCALATION FOR THIS ALTERNATE.(16.5%)(FY3)					-	-	$693,992	$322,366	$1,190,646	$2,207,004
TOTAL ESTIMATED COSTS, (CAPITAL)					78,402	-	$4,900,003	$2,276,102	$8,406,684	$15,582,789

NOTES:
1).INCL.ALL CONSTRUCTION PERSONNEL SAFETY TRAINING PER OSHA REQMTS.
2).HEALTH PHYSICS FACTOR 20%PER RAY ROPPEL OF WMCO.
3).THIS IS FOR CERCLA & PERSONNEL PROTECTION REQUIREMENTS
4).2ND & 3RD TIER CONTRACTOR MARKUP TO PRIME 5%
5).PRIME CONTRACTOR'S MARKUP 20%. OF HIS MATERIAL & LABOR COSTS.
6).RUST MANAGEMENT FEE PER RAY ROPPEL OF WMCO.
7).ALL PROTECTIVE CLOTHING, RESPIRATORY EQPT. ETC MUST BE WORN.
8).NO FUNDING FOR CERCLA,FSAR, OR OTHER REGULATORY PROGRAMS INCLUDED.
9) WORK TO BE DONE BY A FIXED PRICE CONTRACTOR AND SUBCONTRACTORS.
10).WORK SCHEDULE IS FIRST SHIFT,ON A 4DAY/WEEK,10 HR./DAY(40 HR. BASIS)
11).DECON TRAILERS NOT PROVIDED. USE EXISTING SITE FACILITIES.
12).LONG TERM MONITORING COSTS NOT INCLUDED IN THIS OPTION.
13)ESCALATION ASSUMES MIDPOINT OF CONSTRUCTION AS FY 94-1.

DRAFT

FERNALD PROJECT

11/26/90

I. T. PROJECT #503317-OP. UNIT #1

ESTIMATOR: F.H.GASLIGHTWALA

COSTS-SLUDGE & WATER TREATMENT ALTERNATIVE-A-OPTION 4A, 5A

PROJ.ENGR:SUSAN RHYNE

TYPE OF ESTIMATE:-30%→50%

FY 91-1 DOLLARS

DESCRIPTION	Qty.	Unit	MAT'L $/UNIT	MAN-HRS /UNIT	TOTAL MAN-HRS	$/HR	$ MATERIAL	$ LABOR	1st or 2ND TIER OR EQUP. RNTL.	TOTAL COST
THICKENER, (TH-1), 60 FT. DIA., (SUBCONTRACT PRICE)	1	EA		320	320				$235,000	$235,000
CLARIFIER, (CL-1), 40 FT. DIA., (SUBCONTRACT PRICE)	1	EA		1,360	1,360				$140,000	$140,000
MULTIMEDIA FILTER, (F-1), 12 FT.	1	EA	$90,000	48	48	$27.12	$90,000	$1,302		$91,302
REVERSE OSMOSIS, (R01A, B), 125 G.P.M.	2	EA	$270,000	120	240	$27.12	$540,000	$6,309		$546,309
ION EXCHANE(IE-1A, B), 100GPM, (1 SET OF CATION BEDS,	2	EA	$150,000	160	320	$27.12	$300,000	$8,678		$308,678
1 SET OF ANION BEDS)	1	EA	-	-	-	-	-	-	-	-
LIFT STATION:200 G.P.M.DUPLEX PUMPS, 20' LIFT INCL. AL	1	EA	$21,000	80	80	$27.12	$21,000	$2,170		$23,170
VACCUM TRAILER, 50 CU. YDS.	1	EA	$130,000	40	40	$27.12	$130,000	$1,085		$131,085
VACCUM TRUCKS, 16 CU. YD., AUXILIARY ENGINE	1	EA	$139,000	40	40	$27.12	$139,000	$1,085		$140,085
THICKENER, w/ UNDERFLOW PUMP, (P01), 200 G.P.M., 50% SO	1	EA	$42,000	160	160	$27.12	$42,000	$4,339		$46,339
50 P.S.I. PRESSURE	-	-	-	-	-	-	-	-	-	-
FRONT END LOADER, MODEL 916, 1.71 CU.YD. CAPACITY.	1	EA	$74,000	16	16	$26.73	$74,000	$428		$74,428
FEED PUMPS(P02-P07B)	-	-	-	-	-	-	-	-	-	-
P-02, P05THRU P07 A,B	7	EA	$2,234	32	224	$27.12	$15,638	$6,075		$21,713
P03, P04	2	EA	$2,717	32	64	$27.12	$5,434	$1,736		$7,170
DOUBLE WALL PIPE -6" C.S.	450	FT	$28	0.774	348	$27.12	$12,600	$9,438		$22,038
TANK,800,000 GALS.,80 FT.DIA.X 30 FT. HIGH,SLAB BOTTOM	2	EA	-	640	1,280	-	-	-	$1,200,000	$1,200,000
DOME TOP,4 MANHOLES,1 INLET,2 OUTLET, NON ASME	-	-	-	-	-	-	-	-	-	-
TANK, 700,000 GALS, 80 FT.DIA.X 25 FT. HIGH, SLAB BOTTO	1	EA	-	560	560	-	-	-	$500,000	$500,000
DOME TOP, NON ASME, VERTICAL, 4 MANHOLES,1 INLET,2	-	-	-	-	-	-	-	-	-	-
HEAT TRACING	400	FT	$8	0.8	320	$24.74	$3,200	$7,917	-	$11,117
PIPING CARBON STEEL-4" SCH.40	800	FT	$11.29	0.444	355	$27.12	$9,032	$9,628	-	$18,660
WWTP HEATING SYSTEM:	-	-	-	-	-	-	-	-	-	-
ELECTRIC HEATING SYSTEM-772 KW=	1	EA	$44,800	160	160	$24.74	$44,800	$3,958	-	$48,758
WWTP VENTILATION SYSTEM:	-	-	-	-	-	-	-	-		-
6,300 C.F.M. SYSTEM	2	EA	-	180	-	-	-	-	$75,600	$75,600
TANK FILTER/VENTILATION, 70 C.F.M.	2	EA	-	4	-	-	-	-	$840	$840
FABRIC ARCH STRUCTURE, 120' W X 260'L X59'H	1	EA	$583,600	1477	1,477	$24.41	$583,600	$36,054	-	$619,654
CRANE OPERATOR FOR FABRIC ARCH STRUCTURE	1	LS	-	185	185	$24.41	-	$4,516	$2,200	$6,716
SCAFFOLDING FOR FABRIC ARCH STRUCTURE	1	LS	-	148	148	$24.41	-	$3,613	$3,000	$6,613
SUPERVISOR FOR FABRIC ARCH STRUCTURE	1	LS	-	-	0	-	-	$0	$7,200	$7,200
FREIGHT COST FOR FABRIC ARCH STRUCTURE	1	LS	-	-	-	-	-	-	$9,000	$9,000
REINFORCED CONCRETE SLAB, 31,200 SQ. FT. 9" THICK	867	CYDS	$50	0.492	427	$24.41	$43,350	$10,423	-	$53,773
SUMPS,9' X4' WITH LINER, HIGH DENSITY POLYETHYLENE	14	EA	$2,700	32	448	$24.41	$37,800	$10,936	-	$48,736
REINFORCED CONCRETE PADS, 82' DIA. X9" THICK	441	CYDS	$50	0.492	217	$24.41	$22,050	$5,297	-	$27,347
400 WATT HIGH PRESSURE SODIUM VAPOR LIGHTS, 3 PHASE	18	EA	$5,380	28	504	$24.74	$96,840	$12,469	-	$109,309
WIRING CONDUIT FOR ABOVE LIGHTS	1	LS	-	1260	1,260	-	-	$0	$45,000	$45,000
END SLIDING DOOR 14' HEIGHT X9'-6" WIDTH	2	EA	$6,000	16	32	$24.41	$12,000	$781		$12,781
REINFORCED CONCRETE w/ONE LAYER 6 X6, 10/10 WELD WI	27	CYDS	$50	0.492	13	$24.41	$1,350	$317	-	$1,667
VALVE PIT 2185 SQ FT. 4" THICK w/WATERPROOFING	-	-	-	-	-	-	-	-	-	-
EARTHERN BERM FOR UNTREATED WATER TANKS	617	CYDS	-	0.582	359		-		$16,716	$16,716
CLAY, 95% COMPACTION, 6'-6" LIFTS, 10 MILE HAUL DISTA	-	-	-	-	-	-	-	-	-	-
SUBTOTAL THIS PAGE	1	LS			11,003		$2,223,694	$148,734	$2,234,556	$4,607,004

FERNALD PROJECT 11/26/90

I. T. PROJECT #903317-OP. UNIT #1 ESTIMATOR: F.H.GASLIGHTWALA

COSTS-SLUDGE & WATER TREATMENT ALTERNATIVE-A-OPTION 4A, 5A PROJ.ENGR:SUSAN RHYNE

TYPE OF ESTIMATE: -30%→30%

FY 91-1 DOLLARS

DESCRIPTION	Qty.	Unit	MAT'L $/UNIT	MAN-HRS /UNIT	TOTAL MAN-HRS	$/HR	$ MATERIAL	$ LABOR	1st or 2ND TIER OR EQUP. RNTL.	TOTAL COST
CARRYFORWARD FROM PREVIOUS PAGE	1	LS			11,005		$2,223,694	$148,754	$2,234,556	$4,607,004
6" DIAMETER, DOUBLE WALL CARBON STEEL PIPE BURIED,	6,500	FT	$28	0.774	5,031	$27.12	$182,000	$136,441	-	$318,441
BELOW SOIL SURFACE	-	-	-	-	-	-	-	-	-	-
4" DIAMETER, DOUBLE WALL CARBON STEEL PIPE BURIED,	800	FT	$11.29	0.444	355	$27.12	$9,032	$9,628	-	$18,660
BELOW SOIL SURFACE	-	-	-	-	-	-	-	-	-	-
GRAVEL LOT w/6" CRUSHED STONE (1" MAX. GRADE)	866	CYDS	-	0.056	48		-		$12,340	$12,340
HDPE LINING, 80 MIL FOR UNTREATED WATER TANKS.	29,100	CYDS	-	-	-	-	$16,800	$43,650	-	$60,450
SUBTOTAL THIS PAGE	1	LS			16,439		$2,431,526	$338,473	$2,246,896	$5,016,895
PRODUCTIVITY FACTOR(17% ADD TO MANHOURS & DOLLA	1	LS			2,795	$27.12	-	$75,800	$381,972	$457,772
EQUIPMENT MANHOURS	1	LS			1,644	$26.75	-	$43,944	$82,200	$126,144
TOTAL MECHANICAL WORK	1	LS			20,878		$2,431,526	$458,217	$2,711,068	$5,600,811
TOTAL ELECTRICAL WORK (5% OF TOTAL MECHANICAL)	1	LS			6,395		$121,576	$22,911	$155,553	$280,040
TOTAL	1	LS			27,273		$2,553,102	$481,128	$2,846,621	$5,880,851

DRAFT

FERNALD PROJECT 11/26/90

I. T. PROJECT #503317-OP. UNIT #1 ESTIMATOR: F.H.GASLIGHTWALA

COSTS-SLUDGE & WATER TREATMENT ALTERNATIVE -A-OPTION 4A. PROJ.ENGR:SUSAN RHYNE

TYPE OF ESTIMATE: -30%→50%

FY 91-1 DOLLARS

DESCRIPTION	Qty.	Unit	MAT'L $/UNIT	MAN-HRS /UNIT	TOTAL MAN-HRS	$/HR	$ MATERIAL	$ LABOR	1st or 2ND TIER OR EQUP. RNTL.	TOTAL COST
CARRYOVER FROM PREVIOUS PAGE					27,273		$2,553,102	$481,128	$2,846,621	$5,880,851
SMALL TOOLS (3% OF TOTAL COSTS)	1	LS			-				$176,426	$176,426
CLEAN UP LABOR (3% OF TOTAL COSTS)	1	LS			8,027				$176,426	$176,426
TEMP. SERV. & FAC. (5% OF TOTAL COSTS)	1	LS							$294,043	$294,043
FIELD STAFF (4% OF TOTAL COSTS)	1	LS			12,381				$235,234	$235,234
SCAFFOLDING (2% OF TOTAL COSTS)	1	LS			4,727				$117,617	$117,617
SUBTOTAL PROJECT COSTS					52,408		$2,553,102	$481,128	$3,846,367	$6,880,597
HEALTH PHYSICS (20% OF LABOR & S/C COSTS) (#2)					17,310			$96,226	$769,273	$865,499
SALES TAX (5.5% OF MATERIAL COSTS)							$140,421	-	-	$140,421
SUBTOTAL					69,718		$2,693,523	$577,354	$4,615,640	$7,886,517
CERCLA REQMTS & PERSONNEL PROTECTION(12% OF TOTA					8,309		$323,223	$69,282	$553,877	$946,382
BOND(3%)							$80,806	$17,321	$138,469	$236,596
SUBTOTAL					78,027		$3,097,552	$663,957	$5,307,986	$9,069,495
MARKUP BY GENERAL CONTRACTOR ON 2ND & 3RD TIER C									$265,399	$265,399
PROFIT OF PRIME CONTRACTOR (20%) (#5)							$619,510	$132,791	-	$752,301
SUBTOTAL					78,027		$3,717,062	$796,748	$5,573,385	$10,087,195
CONSTRUCTION MANAGEMENT FEE (24% OF TOTAL COSTS)							$892,095	$191,219	$1,337,612	$2,420,926
SUBTOTAL					78,027		$4,609,157	$987,967	$6,910,997	$12,508,121
FSAR (SAFETY REPORT),(3% OF LABOR & S/C COSTS BEFORE					1,911			$23,902	$167,202	$191,104
EMISSIONS MODELING,(3% OF TOTAL COST BEFORE FEES)					3,026		$111,512	$23,902	$167,202	$302,616
PROJ.MGMT -WMCO- (8%OF COSTS EXCL. RUST FEE)							$297,365	$63,740	$445,871	$806,976
ENGINEERING (20% (TITLE 1 & 2) OF COST EXCL ALL FEES)					20,174		$743,412	$159,350	$1,114,677	$2,017,439
SUBTOTAL					103,138		$5,761,446	$1,258,861	$8,805,949	$15,826,256

DRAFT

FERNALD PROJECT 11/26/90

I. T. PROJECT #503317-OP. UNIT #1 ESTIMATOR: F.H.GASLIGHTWALA

COSTS-SLUDGE & WATER TREATMENT ALTERNATIVE -A-OPTION 4A. PROJ.ENGR:SUSAN RHYNE

TYPE OF ESTIMATE:-50%-+50%

FY 91-1 DOLLARS

DESCRIPTION	Qty.	Unit	MAT'L $/UNIT	MAN-HRS /UNIT	TOTAL MAN-HRS	RATE	$ MATERIAL	$ LABOR	1ST OR 2ND TIERO EQUP. RNTL	TOTAL COST
CARRY FORWARD					103,138		$5,761,446	$1,258,861	$8,805,949	$15,826,256
DECONTAMINATE & DISASSEMBLE SYSTEM					1,600		-	-	$160,000	$160,000
SUBTOTAL COSTS					104,738	-	$5,761,446	$1,258,861	$8,965,949	$15,986,256
CONTINGENCY 25%						-	$1,440,362	$314,715	$2,241,487	$3,996,564
TOTAL ESTIMATED COSTS					104,738	-	$7,201,808	$1,573,576	$11,207,437	$19,982,820
ESCALATION FOR THIS ALTERNATE,(16.5%X/13)					-	-	$1,188,298	$259,640	$1,849,227	$3,297,165
TOTAL ESTIMATED COSTS, (CAPITAL)					104,738	-	$8,390,106	$1,833,216	$13,056,664	$23,279,985

NOTES:
1).INCL.ALL CONSTRUCTION PERSONNEL SAFETY TRAINING PER OSHA REQMTS.
2).HEALTH PHYSICS FACTOR 20%PER RAY ROPPEL OF WMCO.
3).THIS IS FOR CERCLA & PERSONNEL PROTECTION REQUIREMENTS
4).2ND & 3RD TIER CONTRACTOR MARKUP TO PRIME 5%
5).PRIME CONTRACTOR'S MARKUP 20%. OF HIS MATERIAL & LABOR COSTS.
6).RUST MANAGEMENT FEE PER RAY ROPPEL OF WMCO.
7).ALL PROTECTIVE CLOTHING, RESPIRATORY EQPT. ETC MUST BE WORN.
8).NO FUNDING FOR CERCLA,FSAR, OR OTHER REGULATORY PROGRAMS INCLUDED.
9) WORK TO BE DONE BY A FIXED PRICE CONTRACTOR AND SUBCONTRACTORS.
10).WORK SCHEDULE IS FIRST SHIFT,ON A 4DAY/WEEK,10 HR./DAY(40 HR. BASIS)
11).DECON TRAILERS NOT PROVIDED. USE EXISTING SITE FACILITIES.
12).LONG TERM MONITORING COSTS NOT INCLUDED IN THIS OPTION.
13)ESCALATION ASSUMES MIDPOINT OF CONSTRUCTION AS FY 94-1.

DRAFT

FERNALD PROJECT

11/26/90

I. T.PROJECT NO.:903517 OP.UNIT #

ESTIMATOR: F.H.GASLIGHTWALA

AREA EAST OF O.U.#1

PROJ.ENGR:KEN STIER

TYPE OF ESTIMATE:-30%→50%

PROJ. MGR.DAVID HARMER

FY 91-1 DOLLARS

DESCRIPTION	Qty.	Unit	MAT'L $/UNIT	MAN-HRS /UNIT	TOTAL MAN-HRS	$/HR	$ MATERIAL	$ LABOR	1ST OR 2ND TIER OR EQUP. RNTL	TOTAL COST
EXCAVATION	37,037	CYD	-	0.045	1,667	-	-	-	$207,407	$207,407
SEED & MULCH	55,556	SYD	-	0.048	2,667	-	-	-	$95,890	$95,890
SERVICE ROAD-20' WIDE w/6" CRUSHED STONE(1' MAX)	1,100	FT	-	0.056	62	-	-	-	$33,000	$33,000
SERVICE ROAD-30' WIDE w/6" CRUSHED STONE(1' MAX)	1300	FT	-	0.056	73	-	-	-	$65,000	$65,000
CHAIN LINK SECURITYFENCE-7'HT.,TOPPED w/3 STRANDS OF BAR	800	FT	$10	0.3036	243	$24.41	$8,000	$5,932	-	$13,932
GATES-7'HT. X15'DOUBLE,CHAIN LINK,TOPPED w/3 STRANDS BAR	1	EA	$665	20	20	$24.41	$665	$488	-	$1,153
GATES-7'HT. X4'SINGLE,CHAIN LINK,TOPPED w/3 STRANDS BARB	2	EA	$305	10	20	$24.41	$610	$488	-	$1,098
HEALTH PHYSICS-24 HRS/DAY, GEIGER COUNTER MONITORING S	1	LS	-	-	-	-	-	-	$162,000	$162,000
SECURITY LIGHTS-150 WATTS, NEON VAPOR MOUNTED ON 30' PO	16	EA	$1,561	16	256	$24.74	$24,976	$6,333	-	$31,309
ELECTRICAL WIRING, CONDUIT FOR THIS LIGHTS (SUBCONTR.)	1	LS	-	1,280	1,280	-			$40,000	$40,000
FABRIC ARCH STRUCTURE-50' X50' X24'	1	LS	$40,000	96	96	$24.41	$40,000	$2,343		$42,343
FREIGHT COSTS FOR 50'W X 50'L X 24'H	1	EA	$603	-	-	-	$603			$603
SCAFFOLDING FOR THIS STRUCTURE	1	LS	$200	16	16	$24.41	$200	$391		$591
SUPERVISOR FOR THIS STRUCTURE	1	LS	-	16	16	-			$1,000	$1,000
SLIDING DOORS:, 14' X9'-6" FOR STRUCTURE	2	EA	INCL	16	32	$24.41	$0	$781		$781
REINFORCED CONCRETE SLAB	62	CYD	$50	0.492	31	$24.41	$3,100	$757		$3,857
SODIUM VAPOR LAMP, 400 WATTS, HIGH PRESSURE, 3 PHASE	2	EA	$5,380	28	56	$24.74	$10,760	$1,385		$12,145
ELECTRICAL WIRING, CONDUIT FOR THIS LAMPS (SUBCONTR.)	1	LS	-	140	140	-			$5,000	$5,000
OFFICE TRAILERS-60' DOUBLEWIDE	-	-	-	-	-	-	-	-	-	-
A). FOR PERSONNEL CLEANING FACILITY & ASSOC.EQUIPMENT	1	EA	$54,000	64	64	$24.41	$54,000	$1,562		$55,562
B). FOR PERSONNEL DECON. & ASSOC. EQUIPMENT.	1	EA	$145,000	160	160	$24.41	$145,000	$3,906		$148,906
C). FOR HEALTH PHYSICS/QUALITY ASSURANCE & ASSOC. EQUIP	1	EA	$67,000	64	64	$24.41	$67,000	$1,562		$68,562
D). FOR ADMINISTRATIVE FACILITY & ASSOC. EQUIPMENT.	1	EA	$57,000	64	64	$24.41	$57,000	$1,562		$58,562
PARKING AREA w/6" CRUSHED STONE(1" MAX.)	1,667	SYD	$14.28	0.408	680	$24.35	$23,805	$16,558		
SUB-TOTAL			371,788		7,707		$435,719	$44,048	$607,297	$1,087,064
PRODUCTIVITY FACTOR(17% ADD TO MANHOURS & DOLLARS) , (I			-		1,310	$27.12		$35,527	$103,240	$138,767
RENTAL EQUIPMENT MANHOURS					1,210	$26.73		$32,343	$48,400	$80,743
TOTAL	1	LS			10,227		$435,719	$111,918	$758,937	$1,306,574
INDIRECTS:	1	LS								
SMALL TOOLS (3% OF TOTAL COSTS)	1	LS			-				$39,197	$39,197
CLEAN UP LABOR (3% OF TOTAL COSTS)	1	LS			1,783				$39,197	$39,197
TEMP. SERV. & FAC. (5% OF TOTAL COSTS)	1	LS							$65,329	$65,329
FIELD STAFF (4% OF TOTAL COSTS)	1	LS			2,751				$52,263	$52,263
SCAFFOLDING (2% OF TOTAL COSTS)	1	LS			1,050				$26,131	$26,131
SUBTOTAL PROJECT COSTS					15,811		$435,719	$111,918	$981,054	$1,528,691

DRAFT

FERNALD PROJECT

11/26/90

I. T.PROJECT NO.:303317 OP.UNIT #1

ESTIMATOR: F.H.GASLIGHTWALA

AREA EAST OF O.U.#1

PROJ.ENGR:KEN STIER

TYPE OF ESTIMATE:-30%-+30%

PROJ. MGR.DAVID HARMER

FY 91-1 DOLLARS

DESCRIPTION	Qty.	Unit	MAT'L $/UNIT	MAN-HRS /UNIT	TOTAL MAN-HRS	$/HR	$ MATERIAL	$ LABOR	1ST OR 2ND TIER OR EQUP. RNTL	TOTAL COST
CARRYFORWARD					15,811		$455,719	$111,918	$981,054	$1,528,691
HEALTH PHYSICS (20% OF LABOR & S/C COSTS) (#2)					4,372			$22,584	$196,211	$218,595
SALES TAX (5.5% OF MATERIAL COSTS)							$23,965	-	-	$23,965
SUBTOTAL					20,183		$459,684	$134,502	$1,177,265	$1,771,251
CERCLA REQMTS & PERSONNEL PROTECTION(12% OF TOTAL COS					2,099		$55,162	$16,116	$141,272	$212,550
BOND(3%)							$13,791	$4,029	$35,318	$53,138
SUBTOTAL					22,282		$528,637	$154,447	$1,353,855	$2,036,939
MARKUP BY GENERAL CONTRACTOR ON 2ND & 3RD TIER CONTR									$67,693	$67,693
PROFIT OF PRIME CONTRACTOR (20%) (#5)							$105,727	$30,889	-	$136,616
SUBTOTAL					22,282		$634,364	$185,336	$1,421,548	$2,241,248
CONSTRUCTION MANAGEMENT FEE (24% OF TOTAL COSTS) (#6)							$152,247	$44,481	$341,172	$537,900
SUBTOTAL					22,282		$786,611	$229,817	$1,762,720	$2,779,148
FSAR (SAFETY REPORT),(3% OF LABOR & S/C COSTS BEFORE FEES)					482			$5,560	$42,646	$48,206
EMISSIONS MODELING,(3% OF TOTAL COST BEFORE FEES)					672		$19,031	$5,560	$42,646	$67,237
PROJ.MGMT -WMCO- (8%OF COSTS EXCL. RUST FEE)							$50,749	$14,827	$113,724	$179,300
ENGINEERING (20% (TITLE 1 & 2) OF COST EXCL ALL FEES)					4,485		$126,873	$37,067	$284,310	$448,250
SUBTOTAL					27,918		$983,264	$292,831	$2,246,046	$3,522,141

DRAFT

FERNALD PROJECT

I. T.PROJECT NO.:303317 OP.UNIT #1

AREA EAST OF O.U.#1

TYPE OF ESTIMATE:-30%--+50%

FY 91-1 DOLLARS

11/26/90

ESTIMATOR: F.H.GASLIGHTWALA

PROJ.ENGR:KEN STIER

PROJ. MGR.DAVID HARMER

DESCRIPTION	Qty.	Unit	MAT'L $/UNIT	MAN-HRS /UNIT	TOTAL MAN-HRS	RATE	$ MATERIAL	$ LABOR	1ST OR 2ND TIERO EQUP. RNTL	TOTAL COST
CARRY FORWARD					27,918		$983,264	$292,831	$2,246,046	$3,522,141
DECONTAMINATE & DISASSEMBLE SYSTEM					1,600		-	-	$160,000	$160,000
SUBTOTAL COSTS					29,518	-	$983,264	$292,831	$2,406,046	$3,682,141
CONTINGENCY 25%						-	$245,816	$73,208	$601,512	$920,535
TOTAL ESTIMATED COSTS					29,518	-	$1,229,080	$366,039	$3,007,558	$4,602,677
ESCALATION FOR THIS ALTERNATE,(16.5%)(/13)					-	-	$202,798	$60,396	$496,247	$759,441
TOTAL ESTIMATED COSTS, (CAPITAL)					29,518	-	$1,431,878	$426,435	$3,503,805	$5,362,118

NOTES:
1).INCL.ALL CONSTRUCTION PERSONNEL SAFETY TRAINING PER OSHA REQMTS.
2).HEALTH PHYSICS FACTOR 20%PER RAY ROPPEL OF WMCO.
3).THIS IS FOR CERCLA & PERSONNEL PROTECTION REQUIREMENTS
4).2ND & 3RD TIER CONTRACTOR MARKUP TO PRIME 3%
5).PRIME CONTRACTOR'S MARKUP 20%. OF HIS MATERIAL & LABOR COSTS.
6).RUST MANAGEMENT FEE PER RAY ROPPEL OF WMCO.
7).ALL PROTECTIVE CLOTHING, RESPIRATORY EQPT. ETC MUST BE WORN.
8).NO FUNDING FOR CERCLA,FSAR, OR OTHER REGULATORY PROGRAMS INCLUDED.
9) WORK TO BE DONE BY A FIXED PRICE CONTRACTOR AND SUBCONTRACTORS.
10).WORK SCHEDULE IS FIRST SHIFT,ON A 4DAY/WEEK,10 HR./DAY(40 HR. BASIS)
11).DECON TRAILERS NOT PROVIDED. USE EXISTING SITE FACILITIES.
12).LONG TERM MONITORING COSTS NOT INCLUDED IN THIS OPTION.
13)ESCALATION ASSUMES MIDPOINT OF CONSTRUCTION AS FY 94-1.

DRAFT

FERNALD PROJECT 11/26/90

I.T.CORP.PROJ.# 303317-OP. UNIT #1 ESTIMATOR: F.H.GASLIGHTWALA

COSTS:OP. UNIT 1.-PIT DREDGING,CAPITAL-OPTION 4A,4B,5A,5B PROJ.ENGR:DARRELL DROUHARD

TYPE OF ESTIMATE: -30%--50%

FY 91-1 DOLLARS

DESCRIPTION	Qty.	Unit	MAT'L $/UNIT	M.H. /UNIT	TOTAL MAN-HRS	$/HR	$ MATERIAL	$ LABOR	1ST OR 2ND TIER EQUP. RNTL	TOTAL COST
AUTOMATED FLOATING DREDGE w/ OPTIONAL EQUIPME	1	EA.	$74,538		420	$26.73	$74,538	$11,227		$85,765
INLINE BOOSTER PUMP	1	EA.	$5,400		32	$27.12	$5,400	$868		$6,268
BUTYL TUBING-6"	500	FT	$6	0.41	205	$27.12	$3,000	$5,560		$8,560
DOUBLE WALLED PIPE ASSUME 6" C.S.	500	FT	$28	0.774	387	$27.12	$14,000	$10,495		$24,495
POWER SUPPLIES:	1	LS	-		-	-	-	-		-
GENERATOR, PORTABLE,30 K.W.	1	LS	$13,400	40	40	$24.74	$13,400	$990		$14,390
GENERATOR, PORTABLE,25 K.W.	1	LS	$13,400	40	40	$24.74	$13,400	$990		$14,390
(BOTH GENERATORS ARE 240VOLT, 3 PH. DIESEL OR GAS	-	EA.	-		-	-	-	-		-
POWERED)	-	LS	-		-	-	-	-		-
WORKLIGHTS FOR NIGHT DREDGING(w/GEN.&MOTOR,DI	4	EA	$2,432	20	80	$24.74	$9,728	$1,979		$11,707
SUBTOTAL THIS PAGE	1	LS			1,204		$133,466	$32,109	-	$165,575
PRODUCTIVITY FACTOR(17% ADD TO MANHOURS &DOL		LS			205	$27.12		$5,560	-	$5,560
EQUIPMENT RENTAL HOURS,(FOR PIPING)	1	LS			40	$26.73		$1,069	$3,000	$4,069
SUBTOTAL	1	LS			1,449		$133,466	$38,738	$3,000	$175,204

DRAFT

FERNALD PROJECT 11/26/90

I.T.CORP.PROJ.# 503317-OP. UNIT #1 ESTIMATOR: F.H.GASLIGHTWALA

COSTS:OP. UNIT 1.-PIT DREDGING,CAPITAL-OPTION 4A,4B,5A,5B PROJ.ENGR:DARRELL DROUHARD

TYPE OF ESTIMATE:-30%-+30%

FY 91-1 DOLLARS

DESCRIPTION	Qty.	Unit	MAT'L $/UNIT	M.H. /UNIT	TOTAL MAN-HRS	$/HR	$ MATERIAL	$ LABOR	1ST OR 2ND TIER EQUP. RNTL	TOTAL COST
CARRYOVER FROM PREVIOUS PAGE					1,449		$133,466	$38,738	$3,000	$175,204
INDIRECTS:	1	LS								
SMALL TOOLS (3% OF TOTAL COSTS)	1	LS			-				$5,256	$5,256
CLEAN UP LABOR (3% OF TOTAL COSTS)	1	LS			239				$5,256	$5,256
TEMP. SERV. & FAC. (5% OF TOTAL COSTS)	1	LS							$8,760	$8,760
FIELD STAFF (4% OF TOTAL COSTS)	1	LS			369				$7,008	$7,008
SCAFFOLDING (2% OF TOTAL COSTS)	1	LS			141				$3,504	$3,504
SUBTOTAL PROJECT COSTS					2,198		$133,466	$38,738	$32,784	$204,988
HEALTH PHYSICS (20% OF LABOR & S/C COSTS) (#2)					286			$7,748	$6,557	$14,304
SALES TAX (5.5% OF MATERIAL COSTS)							$7,341	-	-	$7,341
SUBTOTAL					2,484		$140,807	$46,486	$39,341	$226,633
CERCLA REQMTS & PERSONNEL PROTECTION(12% OF TO					137		$16,897	$5,578	$4,721	$27,196
BOND(3%)							$4,224	$1,395	$1,180	$6,799
SUBTOTAL					2,621		$161,928	$53,459	$45,242	$260,628
MARKUP BY GENERAL CONTRACTOR ON 2ND & 3RD TIE									$2,262	$2,262
PROFIT OF PRIME CONTRACTOR (20%) (#5)							$32,386	$10,692	-	$43,078
SUBTOTAL					2,621		$194,314	$64,151	$47,504	$305,968
CONSTRUCTION MANAGEMENT FEE (24% OF TOTAL COS							$46,635	$15,396	$11,401	$73,432
SUBTOTAL					2,621		$240,949	$79,547	$58,905	$379,400
FSAR (SAFETY REPORT),(3% OFLABOR & S/C COSTSBEFO					34			$1,925	$1,425	$3,350
EMISSIONS MODELING,(3% OF TOTAL COST BEFORE FEE					92		$5,829	$1,925	$1,425	$9,179
PROJ.MGMT -WMCO- (8%OF COSTS EXCL. RUST FEE)							$15,545	$5,132	$3,800	$24,477
ENGINEERING (20% (TITLE 1 & 2) OF COST EXCL ALL FEE					612		$38,863	$12,830	$9,501	$61,194
SUBTOTAL					3,359		$301,186	$101,359	$75,056	$477,600

DRAFT

FERNALD PROJECT

11/26/90

I.T.CORP.PROJ.# 303317-OP. UNIT #1

ESTIMATOR: F.H.GASLIGHTWALA

COSTS:OP. UNIT 1.- PIT DREDGING,CAPITAL-OPTION 4A,4B,5A,5B

PROJ.ENGR:DARRELL DROUHARD

TYPE OF ESTIMATE:-30%--+50%

FY 91-1 DOLLARS

DESCRIPTION	Qty.	Unit	MAT'L $/UNIT	MAN-/UNIT	TOTAL MAN-HRS	RATE	$ MATERIAL	$ LABOR	1ST OR 2ND TIER EQUP. RNTL	TOTAL COST
CARRY FORWARD					3,359		$301,186	$101,359	$75,056	$477,600
DECONTAMINATE & DISASSEMBLE SYSTEM					1,600		-	-	$160,000	$160,000
SUBTOTAL COSTS					4,959	-	$301,186	$101,359	$235,056	$637,600
CONTINGENCY 25%						-	$75,297	$25,340	$58,764	$159,400
TOTAL ESTIMATED COSTS					4,959	-	$376,483	$126,698	$293,820	$797,001
ESCALATION FOR THIS ALTERNATE,(21.2%X/13)					-	-	$79,814	$26,860	$62,290	$168,964
TOTAL ESTIMATED COSTS, (CAPITAL)					4,959	-	$456,297	$153,558	$356,110	$965,965

NOTES:
1).INCL.ALL CONSTRUCTION PERSONNEL SAFETY TRAINING PER OSHA REQMTS.
2).HEALTH PHYSICS FACTOR 20%PER RAY ROPPEL OF WMCO.
3).THIS IS FOR CERCLA & PERSONNEL PROTECTION REQUIREMENTS
4).2ND & 3RD TIER CONTRACTOR MARKUP TO PRIME 5%
5).PRIME CONTRACTOR'S MARKUP 20%. OF HIS MATERIAL & LABOR COSTS.
6).RUST MANAGEMENT FEE PER RAY ROPPEL OF WMCO.
7).ALL PROTECTIVE CLOTHING, RESPIRATORY EQPT. ETC MUST BE WORN.
8).NO FUNDING FOR CERCLA,FSAR, OR OTHER REGULATORY PROGRAMS INCLUDED.
9) WORK TO BE DONE BY A FIXED PRICE CONTRACTOR AND SUBCONTRACTORS.
10).WORK SCHEDULE IS FIRST SHIFT,ON A 4DAY/WEEK,10 HR./DAY(40 HR. BASIS)
11).DECON TRAILERS NOT PROVIDED. USE EXISTING SITE FACILITIES.
12).LONG TERM MONITORING COSTS NOT INCLUDED IN THIS OPTION.
13)ESCALATION ASSUMES MIDPOINT OF CONSTRUCTION AS FY 94-4.

DRAFT

FERNALD PROJECT

11/26/90

I. T.PROJECT NO.:303517 OP.UNIT #1

ESTIMATOR: F.H.GASLIGHTWALA

RAW MATERIAL TRANSFER STATION @ R.&R. TRACKS(BLDG.69) OPTION 4A,5A, 4B,5B

PROJ.ENGR:SCOTT McCOMB

TYPE OF ESTIMATE:-30% --50%

PROJ. MGR.DAVID HARMER

FY 91-1 DOLLARS

DESCRIPTION	Qty.	Unit	MAT'L $/UNIT	MAN-H /UNIT	TOTAL MAN-HRS	$/HR	$ MATERI	$ LABOR	1ST OR 2ND TIER OR EQUP. RNTL	TOTAL COST
PRE-ENGINEERED METAL BLDG, 69' X 25' X 25'	1	EA	$51,948	1,508	1,508	$24.41	$51,948	$36,810	$7,444	$96,202
w/CUSTOM SBF II FRAME w/BUTLER II	-	-	-	-	-	-	-	-	-	-
ROOF SYSTEM (26 GAGE)										
SUBTOTAL					1,508		$51,948	$36,810	$7,444	$96,202
PRODUCTIVITY FACTOR(17% ADD TO MANHOURS & DOLLARS) . (#					256	$24.41		$6,249	$1,265	$7,514
RENTAL EQUIPMENT MANHOURS					237	$26.73		$6,335	$9,480	$15,815
TOTAL	1	LS			2,001		$51,948	$49,394	$18,189	$119,531
INDIRECTS:	1	LS								
SMALL TOOLS (3% OF TOTAL COSTS)	1	LS							$3,586	$3,586
CLEAN UP LABOR (3% OF TOTAL COSTS)	1	LS			163				$3,586	$3,586
TEMP. SERV. & FAC. (5% OF TOTAL COSTS)	1	LS							$5,977	$5,977
FIELD STAFF (4% OF TOTAL COSTS)	1	LS			252				$4,781	$4,781
SCAFFOLDING (2% OF TOTAL COSTS)	1	LS			96				$2,391	$2,391
SUBTOTAL PROJECT COSTS					2,512		$51,948	$49,394	$38,510	$139,852
HEALTH PHYSICS (20% OF LABOR & S/C COSTS) (#2)					352			$9,879	$7,702	$17,581
SALES TAX (5.5% OF MATERIAL COSTS)							$2,857			$2,857
SUBTOTAL					2,864		$54,805	$59,273	$46,212	$160,290
CERCLA REQMTS & PERSONNEL PROTECTION(12% OF TOTAL COS					169		$6,577	$7,113	$5,545	$19,235
BOND(3%)							$1,644	$1,778	$1,386	$4,808
SUBTOTAL					3,033		$63,026	$68,164	$53,143	$184,333
MARKUP BY GENERAL CONTRACTOR ON 2ND & 3RD TIER CONTR.									$2,657	$2,657
PROFIT OF PRIME CONTRACTOR (20%) (#5)							$12,605	$13,633		$26,238
SUBTOTAL					3,033		$75,631	$81,797	$55,800	$213,228
CONSTRUCTION MANAGEMENT FEE (24% OF TOTAL COSTS) (#6)							$18,151	$19,631	$13,392	$51,174
SUBTOTAL					3,033		$93,782	$101,428	$69,192	$264,402
FSAR (SAFETY REPORT),(3% OF LABOR & S/C COSTS BEFORE FEES)					41			$2,454	$1,674	$4,128
EMISSIONS MODELING,(3% OF TOTAL COST BEFORE FEES)					64		$2,269	$2,454	$1,674	$6,397
PROJ.MGMT -WMCO- (8%OF COSTS EXCL. RUST FEE)							$6,030	$6,544	$4,464	$17,038
ENGINEERING (20% (TITLE 1 & 2) OF COST EXCL ALL FEES)					426		$15,126	$16,359	$11,160	$42,645
SUBTOTAL					3,564		$117,227	$129,239	$88,164	$334,630

FERNALD PROJECT

11/26/90

I. T.PROJECT NO.:903317 OP.UNIT #1

ESTIMATOR: F.H.GASLIGHTWALA

RAW MATERIAL TRANSFER STATION @ R.&R. TRACKS(BLDG.#9) OPTION 4A,5A, 4B,5B

PROJ.ENGR:SCOTT McCOMB

TYPE OF ESTIMATE: -30%-+50%

PROJ. MGR.DAVID HARMER

FY 91-1 DOLLARS

DESCRIPTION	Qty.	Unit	MAT'L $/UNIT	MAN-H /UNIT	TOTAL MAN-HRS	RATE	$ MATERI	$ LABOR	1ST OR 2ND TIERO EQUP. RNTL	TOTAL COST
CARRY FORWARD					5,564		$117,227	$129,239	$88,164	$334,630
DECONTAMINATE & DISASSEMBLE SYSTEM					1,600				$160,000	$160,000
SUBTOTAL COSTS					5,164	-	$117,227	$129,239	$248,164	$494,630
CONTINGENCY 25%						-	$29,307	$32,310	$62,041	$123,658
TOTAL ESTIMATED COSTS					5,164	-	$146,534	$161,549	$310,205	$618,288
ESCALATION FOR THIS ALTERNATE,(14.9%)(#13)					-	-	$21,834	$24,071	$46,221	$92,126
TOTAL ESTIMATED COSTS, (CAPITAL)					5,164	-	$168,368	$185,620	$356,426	$710,414

NOTES:
1).INCL.ALL CONSTRUCTION PERSONNEL SAFETY TRAINING PER OSHA REQMTS.
2).HEALTH PHYSICS FACTOR 20%PER RAY ROPPEL OF WMCO.
3).THIS IS FOR CERCLA & PERSONNEL PROTECTION REQUIREMENTS
4).2ND & 3RD TIER CONTRACTOR MARKUP TO PRIME 5%
5).PRIME CONTRACTOR'S MARKUP 20%. OF HIS MATERIAL & LABOR COSTS.
6).RUST MANAGEMENT FEE PER RAY ROPPEL OF WMCO.
7).ALL PROTECTIVE CLOTHING, RESPIRATORY EQPT. ETC MUST BE WORN.
8).NO FUNDING FOR CERCLA,FSAR, OR OTHER REGULATORY PROGRAMS INCLUDED.
9) WORK TO BE DONE BY A FIXED PRICE CONTRACTOR AND SUBCONTRACTORS.
10).WORK SCHEDULE IS FIRST SHIFT,ON A 4DAY/WEEK,10 HR./DAY(40 HR. BASIS)
11).DECON TRAILERS NOT PROVIDED. USE EXISTING SITE FACILITIES.
12).LONG TERM MONITORING COSTS NOT INCLUDED IN THIS OPTION.
13)ESCALATION ASSUMES MIDPOINT OF CONSTRUCTION AS FY 93-4.

DRAFT

FERNALD PROJECT

11/26/90

I. T.PROJECT NO.:303317 OP.UNIT #1

ESTIMATOR: F.H.GASLIGHTWALA

SEGREGATION FACILITY-OPTION 4A,5A,4B,5B

PROJ.ENGR:KEN STIER

TYPE OF ESTIMATE:-30%--50%

PROJ. MGR.DAVID HARMER

FY 91-1 DOLLARS

DESCRIPTION	Qty.	Unit	MAT'L $/UNIT	MAN-H /UNIT	TOTAL MAN-HRS	$/HR	$ MATERIAL	$ LABOR	1ST OR 2ND TIER OR EQUP. RNTL	TOTAL COST
WASTE SEGREGATION FACILITY:	-	-	-	-	-	-	-	-	-	-
WHEEL LOADER, CATERPILLAR MODEL 980C, BUCKET TYPE	3	EA	$301,400				$904,200	$0	$0	$904,200
TOYOTA FD 70 FORKLIFT, CAPACITY 15,000 lb	2	EA	$61,620				$123,240	$0	$0	$123,240
CATERPILLAR SKIDDER, (GRAPPLER), MODEL 518	2	EA	$125,736				$251,472	$0	$0	$251,472
EQUIPMENT ENVIRONMENTAL ENCLOSURE, 1% OF ABOVE COSTS	7	LS					$12,789	$0	$0	$12,789
FABRIC ARCH STRUCTURE, 175' W X 150' L X 24' H	1	EA	$1,346,000	3,140	3,140	$24.41	$1,346,000	$76,647	$0	$1,422,647
LOADING DOORFOR SPRING STRUCTURE	1	EA	INCL	18	18	$24.41		$439	$0	$439
SLIDING DOOR 14' X 9'-6" FOR SPRING STRUCT	1	EA	INCL	16	16	$24.41		$391	$0	$391
CRANE FOR ERRECTING FABRIC ARCH STRUCTURE	1	LS		196	196	$26.75		$5,239	$9,500	$14,739
SCAFFOLDING FOR THIS STRUCTURE	1	LS		314	314	$24.41		$7,665	$12,000	$19,665
SUPERVISOR FOR THIS STRUCTURE	1	EA		196	196	$24.41		$4,784	$2,824	$7,608
FREIGHT COST FOR STRUCTURE	1	LS				-		$0	$0	$9,000
REINFORCED CONCRETE SLAB - 26,250 sq. ft., 12" thick	972	CYD	$50	0.492	478	$24.41	$48,600	$11,668	$0	$60,268
SUMPS - 9' x 4' WITH LINER - HIGH DENSITY POLYETHYLENE	8	EA	$2,700	32	256	$27.12	$21,600	$6,943	$0	$28,543
SODIUM VAPOR LAMP, 400 WATTS, HIGH PRESSURE, 3 PHASE	15	EA	$5,380	28	420	$24.74	$80,700	$10,391	$0	$91,091
ELECTRICAL WIRING, CONDUIT FOR THESE LAMPS	1	LS	-	1,050	1,050	-	-		$37,500	$37,500
GRAVEL LOT - 40,000 sq. ft. w/6" CRUSHED STONE (1" max grade)	4,444	SYD	-	0.056	249	-	-		$63,324	$63,324
GRIZZLY, 5' X 20', FMC SG520, 100 TON/HR.	2	EA	$35,000			-	$70,000			$70,000
GRIZZLY, 6' X 20', FMC SG620, 100 TON/HR	2	EA	$40,000			-	$80,000			$80,000
BUCKET ELEVATOR FMC MODEL 149, CAPACITY 76 cyd/hr	1	EA	$9,000			-	$9,000			$9,000
CRUSHER	1	EA	$500,000			-	$500,000			$500,000
SHREDDER (COMPACTOR)	1	EA	$500,000			-	$500,000			$500,000
MAGNETIC SEPARATOR	1	EA	$1,200,000			-	$1,200,000			$1,200,000
		EA				-				$0
		EA				-				$0
SUBTOTAL					6,333		$5,147,601	$124,167	$125,148	$5,405,916
PRODUCTIVITY FACTOR(17% ADD TO MANHOURS & DOLLARS) , (f					1,077	$27.12		$29,208	-	$29,208
RENTAL EQUIPMENT MANHOURS					950	$26.75		$25,394	$38,000	$63,394
TOTAL	1	LS			8,360		$5,147,601	$178,769	$163,148	$5,489,518
INDIRECTS:	1	LS								
SMALL TOOLS (3% OF TOTAL COSTS)	1	LS			-				$164,686	$164,686
CLEAN UP LABOR (3% OF TOTAL COSTS)	1	LS			7,493				$164,686	$164,686
TEMP. SERV. & FAC. (5% OF TOTAL COSTS)	1	LS							$274,476	$274,476
FIELD STAFF (4% OF TOTAL COSTS)	1	LS			11,557				$219,581	$219,581
SCAFFOLDING (2% OF TOTAL COSTS)	1	LS			4,413				$109,790	$109,790
SUBTOTAL PROJECT COSTS					31,823		$5,147,601	$178,769	$1,096,367	$6,422,737

DRAFT

FERNALD PROJECT

11/26/90

I. T.PROJECT NO.:903317 OP.UNIT #1

ESTIMATOR: F.H.GASLIGHTWALA

SEGREGATION FACILITY-OPTION 4A,5A,4B,5B

PROJ.ENGR:KEN STIER

TYPE OF ESTIMATE:-30%→30%

PROJ. MGR.DAVID HARMER

FY 91-1 DOLLARS

DESCRIPTION	Qty.	Unit	MAT'L $/UNIT	MAN-H /UNIT	TOTAL MAN-HRS	$/HR	$ MATERIAL	$ LABOR	1ST OR 2ND TIER OR EQUP. RNTL	TOTAL COST
CARRY FORWARD					31,823		$5,147,601	$178,769	$1,096,567	$6,422,737
HEALTH PHYSICS (20% OF LABOR & S/C COSTS) (#2)					5,101			$35,754	$219,273	$255,027
SALES TAX (5.5% OF MATERIAL COSTS)							$283,118	-	-	$283,118
SUBTOTAL					36,924		$5,430,719	$214,523	$1,315,840	$6,960,882
CERCLA REQMTS & PERSONNEL PROTECTION(12% OF TOTAL COS					2,448			$25,743	$157,877	$183,620
BOND(3%)								$6,436	$39,469	$45,905
SUBTOTAL					39,372		$5,430,719	$246,702	$1,512,986	$7,190,407
MARKUP BY GENERAL CONTRACTOR ON 2ND & 3RD TIER CONTR.									$75,649	$75,649
PROFIT OF PRIME CONTRACTOR (20%) (#5)							$1,086,144	$49,340	-	$1,135,484
SUBTOTAL					39,372		$6,516,863	$296,042	$1,588,635	$8,401,540
CONSTRUCTION MANAGEMENT FEE (24% OF TOTAL COSTS) (#6)								$71,050	$381,272	$452,322
SUBTOTAL					39,372		$6,516,863	$367,092	$1,969,907	$8,853,862
FSAR (SAFETY REPORT),(1% OF LABOR & S/C COSTS BEFORE FEES)					565			$8,881	$47,659	$56,540
EMISSIONS MODELING,(1% OF TOTAL COST BEFORE FEES)					565			$8,881	$47,659	$56,540
PROJ.MGMT -WMCO- (8%OF COSTS EXCL. RUST FEE)								$23,683	$127,091	$150,774
ENGINEERING (20% (TITLE 1 & 2) OF COST EXCL ALL FEES)					3,769			$59,208	$317,727	$376,935
SUBTOTAL					44,272		$6,516,863	$467,745	$2,510,043	$9,494,651

FERNALD PROJECT

11/26/90

I. T.PROJECT NO.:303317 OP.UNIT #1

ESTIMATOR: F.H.GASLIGHTWALA

SEGREGATION FACILITY-OPTION 4A,5A,4B,5B

PROJ.ENGR:KEN STIER

TYPE OF ESTIMATE:-30%-+50%

PROJ. MGR.DAVID HARMER

FY 91-1 DOLLARS

DESCRIPTION	Qty.	Unit	MAT'L $/UNIT	MAN-H /UNIT	TOTAL MAN-HRS	RATE	$ MATERIAL	$ LABOR	1ST OR 2ND TIERO EQUP. RNTL	TOTAL COST
CARRY FORWARD					44,272		$6,516,863	$467,745	$2,510,043	$9,494,651
DECONTAMINATE & DISASSEMBLE SYSTEM					1,600		-	-	$160,000	$160,000
SUBTOTAL COSTS					45,872	-	$6,516,863	$467,745	$2,670,043	$9,654,651
CONTINGENCY 25%						-	$1,629,216	$116,936	$667,511	$2,413,663
TOTAL ESTIMATED COSTS					45,872	-	$8,146,079	$584,681	$3,337,554	$12,068,314
ESCALATION FOR THIS ALTERNATE,(16.5%X/13)					-	-	$1,344,103	$96,472	$550,696	$1,991,271
TOTAL ESTIMATED COSTS, (CAPITAL)					45,872	-	$9,490,182	$681,153	$3,888,250	$14,059,585

NOTES:
1).INCL.ALL CONSTRUCTION PERSONNEL SAFETY TRAINING PER OSHA REQMTS.
2).HEALTH PHYSICS FACTOR 20%PER RAY ROPPEL OF WMCO.
3).THIS IS FOR CERCLA & PERSONNEL PROTECTION REQUIREMENTS
4).2ND & 3RD TIER CONTRACTOR MARKUP TO PRIME 5%
5).PRIME CONTRACTOR'S MARKUP 20%. OF HIS MATERIAL & LABOR COSTS.
6).RUST MANAGEMENT FEE PER RAY ROPPEL OF WMCO.
7).ALL PROTECTIVE CLOTHING, RESPIRATORY EQPT. ETC MUST BE WORN.
8).NO FUNDING FOR CERCLA,FSAR, OR OTHER REGULATORY PROGRAMS INCLUDED.
9) WORK TO BE DONE BY A FIXED PRICE CONTRACTOR AND SUBCONTRACTORS.
10).WORK SCHEDULE IS FIRST SHIFT,ON A 4DAY/WEEK,10 HR./DAY(40 HR. BASIS)
11).DECON TRAILERS NOT PROVIDED. USE EXISTING SITE FACILITIES.
12).LONG TERM MONITORING COSTS NOT INCLUDED IN THIS OPTION.
13)ESCALATION ASSUMES MIDPOINT OF CONSTRUCTION AS FY 94-1.

DRAFT

FERNALD PROJECT

11/26/90

I. T.PROJECT NO.:303317 OP.UNIT #1

ESTIMATOR: F.H.GASLIGHTWALA

WASTE LAYDOWN & TRANSFER FACILITY-OPTION 4A, 5A

PROJ.ENGR:SCOTT McCOMB

TYPE OF ESTIMATE:-30%-+50%

PROJ. MGR.DAVID HARMER

FY 91-4 DOLLARS

DESCRIPTION	Qty.	Unit	MAT'L $/UNIT	MAN-H /UNIT	TOTAL MAN-HRS	$/HR	$ MATERIAL	$ LABOR	1ST OR 2ND TIER OR EQUP. RNTL	TOTAL COST
WASTE LAYDOWN AND TRANSFER FACILITY:	-	-	-	-	-	-	-	-	-	-
FABRIC ARCH STRUCTURE, 120' W X 365' L X 58' H	1	EA	$778,900	1,920	1,920	$24.41	$778,900	$46,867		$825,767
PERSONNEL & EQUIPMENT, SERVICE ENTRANCE (20'x20'	2	EA	-	32	64	$24.41	$0	$1,562		$1,562
w/SINGLE SLIDE DOOR-8'4" HT. X8'-0" WIDTH.	-	-	-	-	-	-	-	-	-	-
REINFORCED CONCRETE SLAB - 43,800 sq. ft., 8" thick	1,081	CYD	$50	0.492	532	$24.41	$54,050	$12,986		$67,036
SODIUM VAPOR LAMP, 400 WATTS, HIGH PRESSURE, 3 PH	25	EA	$380	28	700	$24.74	$134,500	$17,318		$151,818
FREIGHT COST FOR STRUCTURE	1	LS		-	-	-				$12,000
ELECTRICAL WIRING, CONDUIT FOR THESE LIGHTS	1	LS		1,750	1,750	-			$62,500	$10,130
CRANE FOR ERECTING FABRIC ARCH STRUCTURE	1	LS		240	240	$26.73		$6,415	$2,400	$8,815
SCAFFOLDING FOR ERECTING STRUCTURE	1	LS		192	192	$24.41		$4,687	$3,600	$8,287
SUPERVISOR FOR ERECTING STRUCTURE	1	LS		240	240	$24.41		$5,858	$3,280	$9,138
		EA				-				
		EA				-				
SUBTOTAL					5,658		$967,450	$95,695	$71,780	$1,134,923
PRODUCTIVITY FACTOR(17% ADD TO M.H.& S/C DOLLAR					958	$26.73		$25,607	$12,203	$37,810
RENTAL EQUIPMENT MANHOURS					885	$26.73		$23,656	$35,400	$59,056
TOTAL	1	LS			7,481		$967,450	$144,956	$119,383	$1,231,789
INDIRECTS:	1	LS								
SMALL TOOLS (3% OF TOTAL COSTS)	1	LS			-				$36,954	$36,954
CLEAN UP LABOR (3% OF TOTAL COSTS)	1	LS			1,681				$36,954	$36,954
TEMP. SERV. & FAC. (5% OF TOTAL COSTS)	1	LS							$61,589	$61,589
FIELD STAFF (4% OF TOTAL COSTS)	1	LS			2,595				$49,272	$49,272
SCAFFOLDING (2% OF TOTAL COSTS)	1	LS			990				$24,636	$24,636
SUBTOTAL PROJECT COSTS					12,745		$967,450	$144,956	$328,788	$1,441,194
HEALTH PHYSICS (20% OF LABOR & S/C COSTS) (#2)					1,895			$28,991	$65,758	$94,749
SALES TAX (5.5% OF MATERIAL COSTS)							$53,210	-	-	$53,210
SUBTOTAL					14,640		$1,020,660	$173,947	$394,546	$1,589,153
CERCLA REQMTS & PERSONNEL PROTECTION(12% OF TO					910		$122,479	$20,874	$47,345	$190,698
BOND(3%)							$30,620	$5,218	$11,836	$47,674
SUBTOTAL					15,550		$1,173,759	$200,039	$453,727	$1,827,325
MARKUP BY GENERAL CONTRACTOR ON 2ND & 3RD TIE									$22,686	$22,686
PROFIT OF PRIME CONTRACTOR (20%) (#3)							$234,752	$40,008	-	$274,760
SUBTOTAL					15,550		$1,408,511	$240,047	$476,413	$2,124,971
CONSTRUCTION MANAGEMENT FEE (24% OF TOTAL COS							$338,043	$57,611	$114,339	$509,993
SUBTOTAL					15,550		$1,746,554	$297,658	$590,752	$2,634,964
FSAR (SAFETY REPORT),(3% OF LABOR & S/C COSTS BEF					213			$7,201	$14,292	$21,493
EMISSIONS MODELING,(3% OF TOTAL COST BEFORE FEE					637		$42,255	$7,201	$14,292	$63,748
PROJ.MGMT -WMCO- (8%OF COSTS EXCL. RUST FEE)							$112,681	$19,204	$38,113	$169,998
ENGINEERING (20% (TITLE 1 & 2) OF COST EXCL ALL FEE					4,330		$281,702	$48,009	$95,283	$424,994
SUBTOTAL					20,693		$2,183,192	$379,273	$752,732	$3,315,197

FERNALD PROJECT

11/26/90

I. T.PROJECT NO.:103317 OP.UNIT #1

ESTIMATOR: F.H.GASLIGHTWALA

WASTE LAYDOWN & TRANSFER FACILITY-OPTION 4A, 5A

PROJ.ENGR:SCOTT McCOMB

TYPE OF ESTIMATE:-30%→30%

PROJ. MGR.DAVID HARMER

FY 91-1 DOLLARS

DESCRIPTION	Qty.	Unit	MAT'L $/UNIT	MAN-H /UNIT	TOTAL MAN-HRS	RATE	$ MATERIAL	$ LABOR	1ST OR 2ND TIERO EQUP. RNTL	TOTAL COST
CARRY FORWARD					20,652		$2,183,192	$379,273	$732,732	$3,315,197
DECONTAMINATE & DISASSEMBLE SYSTEM					1,600		-	-	$160,000	$160,000
SUBTOTAL COSTS					22,252	-	$2,183,192	$379,273	$912,732	$3,475,197
CONTINGENCY 25%						-	$545,798	$94,818	$228,183	$868,799
TOTAL ESTIMATED COSTS					22,252	-	$2,728,990	$474,092	$1,140,915	$4,343,996
ESCALATION FOR THIS ALTERNATE.(16.5%)(FY3)					-	-	$450,285	$78,225	$188,251	$716,759
TOTAL ESTIMATED COSTS, (CAPITAL)					22,252	-	$3,179,273	$552,317	$1,329,166	$5,060,755

NOTES:
1).INCL.ALL CONSTRUCTION PERSONNEL SAFETY TRAINING PER OSHA REQMTS.
2).HEALTH PHYSICS FACTOR 20%PER RAY ROPPEL OF WMCO.
3).THIS IS FOR CERCLA & PERSONNEL PROTECTION REQUIREMENTS
4).2ND & 3RD TIER CONTRACTOR MARKUP TO PRIME 5%
5).PRIME CONTRACTOR'S MARKUP 20%. OF HIS MATERIAL & LABOR COSTS.
6).RUST MANAGEMENT FEE PER RAY ROPPEL OF WMCO.
7).ALL PROTECTIVE CLOTHING, RESPIRATORY EQPT. ETC MUST BE WORN.
8).NO FUNDING FOR CERCLA,FSAR, OR OTHER REGULATORY PROGRAMS INCLUDED.
9) WORK TO BE DONE BY A FIXED PRICE CONTRACTOR AND SUBCONTRACTORS.
10).WORK SCHEDULE IS FIRST SHIFT,ON A 4DAY/WEEK,10 HR./DAY(40 HR. BASIS)
11).DECON TRAILERS NOT PROVIDED. USE EXISTING SITE FACILITIES.
12).LONG TERM MONITORING COSTS NOT INCLUDED IN THIS OPTION.
13)ESCALATION ASSUMES MIDPOINT OF CONSTRUCTION AS FY 94-1.

DRAFT

FERNALD PROJECT 11/26/90

I.T.CORP.PROJ.# 303317-OP. UNIT #1 ESTIMATOR: F.H.GASLIGHTWALA

COSTS:OP. UNIT 1.- PIT DREDGING,CAPITAL-OPTION 4A,4B,5A,5B PROJ.ENGR:DARRELL DROUHARD

TYPE OF ESTIMATE:-30%→+50%

FY 91-1 DOLLARS

DESCRIPTION	Qty.	Unit	MAT'L $/UNIT	M.H. /UNIT	TOTAL MAN-HRS	$/HR	$ MATERIAL	$ LABOR	1ST OR 2ND TIER EQUP. RNTL	TOTAL COST
AUTOMATED FLOATING DREDGE w/ OPTIONAL EQUIPME	1	EA.	$74,538		420	$26.73	$74,538	$11,227		$85,765
INLINE BOOSTER PUMP	1	EA.	$5,400		32	$27.12	$5,400	$868		$6,268
BUTYL TUBING-6"	500	FT	$6	0.41	205	$27.12	$3,000	$5,560		$8,560
DOUBLE WALLED PIPE ASSUME 6" C.S.	500	FT	$28	0.774	387	$27.12	$14,000	$10,495		$24,495
POWER SUPPLIES:	1	LS	-		-	-	-	-		-
GENERATOR, PORTABLE,30 K.W.	1	LS	$13,400	40	40	$24.74	$13,400	$990		$14,390
GENERATOR, PORTABLE,25 K.W.	1	LS	$13,400	40	40	$24.74	$13,400	$990		$14,390
(BOTH GENERATORS ARE 240VOLT, 3 PH. DIESEL OR GAS	-	EA.	-		-	-	-	-		-
POWERED)	-	LS	-		-	-	-	-		-
WORKLIGHTS FOR NIGHT DREDGING(w/GEN.&MOTOR,DI	4	EA	$2,432	20	80	$24.74	$9,728	$1,979		$11,707
SUBTOTAL THIS PAGE	1	LS			1,204		$133,466	$32,109	-	$165,575
PRODUCTIVITY FACTOR(17% ADD TO MANHOURS &DOL		LS			205	$27.12		$5,560	-	$5,560
EQUIPMENT RENTAL HOURS,(FOR PIPING)	1	LS			40	$26.73		$1,069	$3,000	$4,069
SUBTOTAL	1	LS			1,449		$133,466	$38,738	$3,000	$175,204

DRAFT

FERNALD PROJECT 11/26/90

I.T.CORP.PROJ.# 303517-OP. UNIT #1 ESTIMATOR: F.H.GASLIGHTWALA

COSTS:OP. UNIT 1.- PIT DREDGING,CAPITAL-OPTION 4A,4B,5A,5B PROJ.ENGR:DARRELL DROUHARD

TYPE OF ESTIMATE:-30%→50%

FY 91-1 DOLLARS

DESCRIPTION	Qty.	Unit	MAT'L $/UNIT	M.H. /UNIT	TOTAL MAN-HRS	$/HR	$ MATERIAL	$ LABOR	1ST OR 2ND TIER EQUP. RNTL	TOTAL COST
CARRYOVER FROM PREVIOUS PAGE					1,449		$133,466	$38,738	$3,000	$175,204
INDIRECTS:	1	LS								
SMALL TOOLS (3% OF TOTAL COSTS)	1	LS			-				$5,256	$5,256
CLEAN UP LABOR (3% OF TOTAL COSTS)	1	LS			239				$5,256	$5,256
TEMP. SERV. & FAC. (5% OF TOTAL COSTS)	1	LS							$8,760	$8,760
FIELD STAFF (4% OF TOTAL COSTS)	1	LS			369				$7,008	$7,008
SCAFFOLDING (2% OF TOTAL COSTS)	1	LS			141				$3,504	$3,504
SUBTOTAL PROJECT COSTS					2,198		$133,466	$38,738	$32,784	$204,988
HEALTH PHYSICS (20% OF LABOR & S/C COSTS) (#2)					286			$7,748	$6,557	$14,304
SALES TAX (5.5% OF MATERIAL COSTS)							$7,341	-	-	$7,341
SUBTOTAL					2,484		$140,807	$46,486	$39,341	$226,633
CERCLA REQMTS & PERSONNEL PROTECTION(12% OF TO					137		$16,897	$5,578	$4,721	$27,196
BOND(3%)							$4,224	$1,395	$1,180	$6,799
SUBTOTAL					2,621		$161,928	$53,459	$45,242	$260,628
MARKUP BY GENERAL CONTRACTOR ON 2ND & 3RD TIE									$2,262	$2,262
PROFIT OF PRIME CONTRACTOR (20%) (#5)							$32,386	$10,692	-	$43,078
SUBTOTAL					2,621		$194,314	$64,151	$47,504	$305,968
CONSTRUCTION MANAGEMENT FEE (24% OF TOTAL COS							$46,635	$15,396	$11,401	$73,432
SUBTOTAL					2,621		$240,949	$79,547	$58,905	$379,400
FSAR (SAFETY REPORT),(3% OFLABOR & S/C COSTSBEFO					34			$1,925	$1,425	$3,350
EMISSIONS MODELING,(3% OF TOTAL COST BEFORE FEE					92		$5,829	$1,925	$1,425	$9,179
PROJ.MGMT -WMCO- (8%OF COSTS EXCL. RUST FEE)							$15,545	$5,132	$3,800	$24,477
ENGINEERING (20% (TITLE 1 & 2) OF COST EXCL ALL FEE					612		$38,863	$12,830	$9,501	$61,194
SUBTOTAL					3,359		$301,186	$101,359	$75,056	$477,600

DRAFT

FERNALD PROJECT 11/26/90

I.T.CORP.PROJ.# 303317-OP. UNIT #1 ESTIMATOR: F.H.GASLIGHTWALA

COSTS:OP. UNIT 1.- FIT DREDGING,CAPITAL-OPTION 4A,4B,5A,5B PROJ.ENGR:DARRELL DROUHARD

TYPE OF ESTIMATE:-30%-+50%

FY 91-1 DOLLARS

DESCRIPTION	Qty.	Unit	MAT'L $/UNIT	MAN-/UNIT	TOTAL MAN-HRS	RATE	$ MATERIAL	$ LABOR	1ST OR 2ND TIER EQUP. RNTL	TOTAL COST
CARRY FORWARD					5,559		$301,186	$101,359	$75,056	$477,600
DECONTAMINATE & DISASSEMBLE SYSTEM					1,600		-	-	$160,000	$160,000
SUBTOTAL COSTS					4,959	-	$301,186	$101,359	$235,056	$637,600
CONTINGENCY 25%						-	$75,297	$25,340	$58,764	$159,400
TOTAL ESTIMATED COSTS					4,959	-	$376,483	$126,698	$293,820	$797,001
ESCALATION FOR THIS ALTERNATE,(21.2%X#13)					-	-	$79,814	$26,860	$62,290	$168,964
TOTAL ESTIMATED COSTS, (CAPITAL)					4,959	-	$456,297	$153,558	$356,110	$965,965

NOTES:
1).INCL.ALL CONSTRUCTION PERSONNEL SAFETY TRAINING PER OSHA REQMTS.
2).HEALTH PHYSICS FACTOR 20%PER RAY ROPPEL OF WMCO.
3).THIS IS FOR CERCLA & PERSONNEL PROTECTION REQUIREMENTS.
4).2ND & 3RD TIER CONTRACTOR MARKUP TO PRIME 5%
5).PRIME CONTRACTOR'S MARKUP 20%. OF HIS MATERIAL & LABOR COSTS.
6).RUST MANAGEMENT FEE PER RAY ROPPEL OF WMCO.
7).ALL PROTECTIVE CLOTHING, RESPIRATORY EQPT. ETC MUST BE WORN.
8).NO FUNDING FOR CERCLA,FSAR, OR OTHER REGULATORY PROGRAMS INCLUDED.
9) WORK TO BE DONE BY A FIXED PRICE CONTRACTOR AND SUBCONTRACTORS.
10).WORK SCHEDULE IS FIRST SHIFT,ON A 4DAY/WEEK,10 HR./DAY(40 HR. BASIS)
11).DECON TRAILERS NOT PROVIDED. USE EXISTING SITE FACILITIES.
12).LONG TERM MONITORING COSTS NOT INCLUDED IN THIS OPTION.
13)ESCALATION ASSUMES MIDPOINT OF CONSTRUCTION AS FY 94-4.

DRAFT

FERNALD PROJECT

11/26/90

I. T.PROJECT NO.:303317 OP.UNIT #1

ESTIMATOR: F.H.GASLIGHTWALA

RAW MATERIAL TRANSFER STATION @ R.&R. TRACKS(BLDG.#9) OPTION 4A,5A, 4B,5B

PROJ.ENGR:SCOTT McCOMB

TYPE OF ESTIMATE:-30%-+30%

PROJ. MGR.DAVID HARMER

FY 91-1 DOLLARS

DESCRIPTION	Qty.	Unit	MAT'L $/UNIT	MAN-H /UNIT	TOTAL MAN-HRS	$/HR	$ MATERI	$ LABOR	1ST OR 2ND TIER OR EQUP. RNTL	TOTAL COST
PRE-ENGINEERED METAL BLDG, 69' X 25' X 25'	1	EA	$51,948	1,508	1,508	$24.41	$51,948	$36,810	$7,444	$96,202
w/CUSTOM SBF II FRAME w/BUTLER II	-	-	-	-	-	-	-	-	-	-
ROOF SYSTEM (26 GAGE)										
SUBTOTAL					1,508		$51,948	$36,810	$7,444	$96,202
PRODUCTIVITY FACTOR(17% ADD TO MANHOURS & DOLLARS) , (#					256	$24.41		$6,249	$1,265	$7,514
RENTAL EQUIPMENT MANHOURS					237	$26.73		$6,333	$9,480	$15,815
TOTAL	1	LS			2,001		$51,948	$49,394	$18,189	$119,531
INDIRECTS:	1	LS								
SMALL TOOLS (3% OF TOTAL COSTS)	1	LS							$3,586	$3,586
CLEAN UP LABOR (3% OF TOTAL COSTS)	1	LS			163				$3,586	$3,586
TEMP. SERV. & FAC. (5% OF TOTAL COSTS)	1	LS							$5,977	$5,977
FIELD STAFF (4% OF TOTAL COSTS)	1	LS			252				$4,781	$4,781
SCAFFOLDING (2% OF TOTAL COSTS)	1	LS			96				$2,391	$2,391
SUBTOTAL PROJECT COSTS					2,512		$51,948	$49,394	$38,510	$139,852
HEALTH PHYSICS (20% OF LABOR & S/C COSTS) (#7)					552			$9,879	$7,702	$17,581
SALES TAX (5.5% OF MATERIAL COSTS)							$2,857			$2,857
SUBTOTAL					2,864		$54,805	$59,273	$46,212	$160,290
CERCLA REQMTS & PERSONNEL PROTECTION(12% OF TOTAL COS					169		$6,577	$7,113	$5,545	$19,235
BOND(3%)							$1,644	$1,778	$1,386	$4,808
SUBTOTAL					3,033		$63,026	$68,164	$53,143	$184,333
MARKUP BY GENERAL CONTRACTOR ON 2ND & 3RD TIER CONTR.									$2,657	$2,657
PROFIT OF PRIME CONTRACTOR (20%) (#5)							$12,605	$13,635		$26,238
SUBTOTAL					3,033		$75,631	$81,797	$55,800	$213,228
CONSTRUCTION MANAGEMENT FEE (24% OF TOTAL COSTS) (#6)							$18,151	$19,631	$13,392	$51,174
SUBTOTAL					3,033		$93,782	$101,428	$69,192	$264,402
FSAR (SAFETY REPORT),(3% OF LABOR & S/C COSTS BEFORE FEES)					41			$2,454	$1,674	$4,128
EMISSIONS MODELING,(3% OF TOTAL COST BEFORE FEES)					64		$2,269	$2,454	$1,674	$6,397
PROJ.MGMT -WMCO- (8%OF COSTS EXCL. RUST FEE)							$6,050	$6,544	$4,464	$17,058
ENGINEERING (20% (TITLE 1 & 2) OF COST EXCL ALL FEES)					426		$15,126	$16,359	$11,160	$42,645
SUBTOTAL					3,564		$117,227	$129,239	$88,164	$334,630

FERNALD PROJECT

11/26/90

I. T.PROJECT NO.:303317 OP.UNIT #1

ESTIMATOR: F.H.GASLIGHTWALA

RAW MATERIAL TRANSFER STATION @ R.&R. TRACKS(BLDG.69) OPTION 4A,5A, 4B,5B

PROJ.ENGR:SCOTT McCOMB

TYPE OF ESTIMATE:-30%-+50%

PROJ. MGR.DAVID HARMER

FY 91-1 DOLLARS

DESCRIPTION	Qty.	Unit	MAT'L $/UNIT	MAN-H /UNIT	TOTAL MAN-HRS	RATE	$ MATERI	$ LABOR	1ST OR 2ND TIERO EQUP. RNTL	TOTAL COST
CARRY FORWARD					3,564		$117,227	$129,259	$88,164	$334,630
DECONTAMINATE & DISASSEMBLE SYSTEM					1,600				$160,000	$160,000
SUBTOTAL COSTS					5,164	-	$117,227	$129,259	$248,164	$494,630
CONTINGENCY 25%						-	$29,307	$32,310	$62,041	$123,658
TOTAL ESTIMATED COSTS					5,164	-	$146,534	$161,549	$310,205	$618,288
ESCALATION FOR THIS ALTERNATE,(14.9%X/13)					-	-	$21,834	$24,071	$46,221	$92,126
TOTAL ESTIMATED COSTS, (CAPITAL)					5,164	-	$168,368	$185,620	$356,426	$710,414

NOTES:
1).INCL.ALL CONSTRUCTION PERSONNEL SAFETY TRAINING PER OSHA REQMTS.
2).HEALTH PHYSICS FACTOR 20%PER RAY ROPPEL OF WMCO.
3).THIS IS FOR CERCLA & PERSONNEL PROTECTION REQUIREMENTS
4).2ND & 3RD TIER CONTRACTOR MARKUP TO PRIME 3%
5).PRIME CONTRACTOR'S MARKUP 20%. OF HIS MATERIAL & LABOR COSTS.
6).RUST MANAGEMENT FEE PER RAY ROPPEL OF WMCO.
7).ALL PROTECTIVE CLOTHING, RESPIRATORY EQPT. ETC MUST BE WORN.
8).NO FUNDING FOR CERCLA,FSAR, OR OTHER REGULATORY PROGRAMS INCLUDED.
9) WORK TO BE DONE BY A FIXED PRICE CONTRACTOR AND SUBCONTRACTORS.
10).WORK SCHEDULE IS FIRST SHIFT,ON A 4DAY/WEEK,10 HR./DAY(40 HR. BASIS)
11).DECON TRAILERS NOT PROVIDED. USE EXISTING SITE FACILITIES.
12).LONG TERM MONITORING COSTS NOT INCLUDED IN THIS OPTION.
13)ESCALATION ASSUMES MIDPOINT OF CONSTRUCTION AS FY 93-4.

DRAFT

FERNALD PROJECT

11/26/90

I. T.PROJECT NO.:303517 OP.UNIT #1

ESTIMATOR: F.H.GASLIGHTWALA

SEGREGATION FACILITY-OPTION 4A.

PROJ.ENGR:KEN STIER

TYPE OF ESTIMATE:-30%++30%

PROJ. MGR.DAVID HARMER

FY 91-1 DOLLARS

DESCRIPTION	Qty.	Unit	MAT'L $/UNIT	MAN-H /UNIT	TOTAL MAN-HRS	$/HR	$ MATERIAL	$ LABOR	1ST OR 2ND TIER OR EQUP. RNTL	TOTAL COST
CARRY FORWARD					31,823		$5,147,601	$178,769	$1,096,367	$6,422,737
HEALTH PHYSICS (20% OF LABOR & S/C COSTS) (#2)					5,101			$35,754	$219,273	$255,027
SALES TAX (5.5% OF MATERIAL COSTS)							$283,118	-	-	$283,118
SUBTOTAL					36,924		$5,430,719	$214,523	$1,315,640	$6,960,882
CERCLA REQMTS & PERSONNEL PROTECTION(12% OF TOTAL COS					2,448			$25,743	$157,877	$183,620
BOND(3%)								$6,436	$39,469	$45,905
SUBTOTAL					39,372		$5,430,719	$246,702	$1,512,986	$7,190,407
MARKUP BY GENERAL CONTRACTOR ON 2ND & 3RD TIER CONTR.									$75,649	$75,649
PROFIT OF PRIME CONTRACTOR (20%) (#5)							$1,086,144	$49,340	-	$1,135,484
SUBTOTAL					39,372		$6,516,863	$296,042	$1,588,635	$8,401,540
CONSTRUCTION MANAGEMENT FEE (24% OF TOTAL COSTS) (#6)								$71,050	$381,272	$452,322
SUBTOTAL					39,372		$6,516,863	$367,092	$1,969,907	$8,853,862
FSAR (SAFETY REPORT),(3% OF LABOR & S/C COSTS BEFORE FEES)					565			$8,831	$47,659	$56,540
EMISSIONS MODELING,(3% OF TOTAL COST BEFORE FEES)					565			$8,831	$47,659	$56,540
PROJ.MGMT -WMCO- (8%OF COSTS EXCL. RUST FEE)								$23,683	$127,091	$150,774
ENGINEERING (20% (TITLE 1 & 2) OF COST EXCL ALL FEES)					3,769			$59,208	$317,727	$376,935
SUBTOTAL					44,272		$6,516,863	$467,745	$2,510,043	$9,494,651

DRAFT

FERNALD PROJECT

I. T.PROJECT NO.:505317 OP.UNIT #1

SEGREGATION FACILITY-OPTION 4A.

TYPE OF ESTIMATE:-30%-+50%

FY 91-1 DOLLARS

11/26/90

ESTIMATOR: F.H.GASLIGHTWALA

PROJ.ENGR:KEN STIER

PROJ. MGR.DAVID HARMER

DESCRIPTION	Qty.	Unit	MAT'L $/UNIT	MAN-H /UNIT	TOTAL MAN-HRS	RATE	$ MATERIAL	$ LABOR	1ST OR 2ND TIERO EQUP. RNTL	TOTAL COST
CARRY FORWARD					44,272		$6,516,863	$467,745	$2,510,043	$9,494,651
DECONTAMINATE & DISASSEMBLE SYSTEM					1,600		-	-	$160,000	$160,000
SUBTOTAL COSTS					45,872	-	$6,516,863	$467,745	$2,670,043	$9,654,651
CONTINGENCY 25%						-	$1,629,216	$116,936	$667,511	$2,413,663
TOTAL ESTIMATED COSTS					45,872	-	$8,146,079	$584,681	$3,337,554	$12,068,314
ESCALATION FOR THIS ALTERNATE,(16.5%X#13)					-	-	$1,344,103	$96,472	$550,696	$1,991,271
TOTAL ESTIMATED COSTS, (CAPITAL)					45,872	-	$9,490,182	$681,153	$3,888,250	$14,059,585

NOTES:
1).INCL.ALL CONSTRUCTION PERSONNEL SAFETY TRAINING PER OSHA REQMTS.
2).HEALTH PHYSICS FACTOR 20%PER RAY ROPPEL OF WMCO.
3).THIS IS FOR CERCLA & PERSONNEL PROTECTION REQUIREMENTS
4).2ND & 3RD TIER CONTRACTOR MARKUP TO PRIME 5%
5).PRIME CONTRACTOR'S MARKUP 20%. OF HIS MATERIAL & LABOR COSTS.
6).RUST MANAGEMENT FEE PER RAY ROPPEL OF WMCO.
7).ALL PROTECTIVE CLOTHING, RESPIRATORY EQPT. ETC MUST BE WORN.
8).NO FUNDING FOR CERCLA,FSAR, OR OTHER REGULATORY PROGRAMS INCLUDED.
9) WORK TO BE DONE BY A FIXED PRICE CONTRACTOR AND SUBCONTRACTORS.
10).WORK SCHEDULE IS FIRST SHIFT,ON A 4DAY/WEEK,10 HR./DAY(40 HR. BASIS)
11).DECON TRAILERS NOT PROVIDED. USE EXISTING SITE FACILITIES.
12).LONG TERM MONITORING COSTS NOT INCLUDED IN THIS OPTION.
13)ESCALATION ASSUMES MIDPOINT OF CONSTRUCTION AS FY 94-1.

DRAFT

FERNALD PROJECT

I. T.PROJECT NO.:303317 OP.UNIT #1

AREA EAST OF O.U.#1

TYPE OF ESTIMATE:-30%--+50%

FY 91-1 DOLLARS

11/26/90

ESTIMATOR: F.H.GASLIGHTWALA

PROJ.ENGR:KEN STIER

PROJ. MGR.DAVID HARMER

DESCRIPTION	Qty.	Unit	MAT'L $/UNIT	MAN-HRS /UNIT	TOTAL MAN-HRS	$/HR	$ MATERIAL	$ LABOR	1ST OR 2ND TIER OR EQUP. RNTL	TOTAL COST
EXCAVATION	37,037	CYD	-	0.045	1,667	-	-	-	$207,407	$207,407
SEED & MULCH	55,556	SYD	-	0.048	2,667	-	-	-	$95,890	$95,890
SERVICE ROAD-20' WIDE w/6" CRUSHED STONE(1' MAX)	1,100	FT	-	0.056	62	-	-	-	$33,000	$33,000
SERVICE ROAD-30' WIDE w/6" CRUSHED STONE(1' MAX)	1300	FT	-	0.056	73	-	-	-	$65,000	$65,000
CHAIN LINK SECURITYFENCE-7'HT.,TOPPED w/3 STRANDS OF BAR	800	FT	$10	0.3036	243	$24.41	$8,000	$5,932	-	$13,932
GATES-7'HT. X15'DOUBLE,CHAIN LINK,TOPPED w/3 STRANDS BAR	1	EA	$665	20	20	$24.41	$665	$488	-	$1,153
GATES-7'HT. X4'SINGLE,CHAIN LINK,TOPPED w/3 STRANDS BARB	2	EA	$305	10	20	$24.41	$610	$488	-	$1,098
HEALTH PHYSICS-24 HRS/DAY, GEIGER COUNTER MONITORING S	1	LS	-	-	-	-	-	-	$162,000	$162,000
SECURITY LIGHTS-150 WATTS, NEON VAPOR MOUNTED ON 30' PO	16	EA	$1,361	16	256	$24.74	$24,976	$6,333	-	$31,309
ELECTRICAL WIRING, CONDUIT FOR THIS LIGHTS (SUBCONTR.)	1	LS	-	1,280	1,280	-			$40,000	$40,000
FABRIC ARCH STRUCTURE-50' X50' X24'	1	LS	$40,000	96	96	$24.41	$40,000	$2,343		$42,343
FREIGHT COSTS FOR 50'W X 50'L X 24'H	1	EA	$603	-	-	-	$603			$603
SCAFFOLDING FOR THIS STRUCTURE	1	LS	$200	16	16	$24.41	$200	$391		$591
SUPERVISOR FOR THIS STRUCTURE	1	LS	-	16	16	-			$1,000	$1,000
SLIDING DOORS:, 14' X9'-6" FOR STRUCTURE	2	EA	INCL	16	32	$24.41	$0	$781		$781
REINFORCED CONCRETE SLAB	62	CYD	$50	0.492	31	$24.41	$3,100	$757		$3,857
SODIUM VAPOR LAMP, 400 WATTS, HIGH PRESSURE, 3 PHASE	2	EA	$5,380	28	56	$24.74	$10,760	$1,385		$12,145
ELECTRICAL WIRING, CONDUIT FOR THIS LAMPS (SUBCONTR.)	1	LS	-	140	140	-			$5,000	$5,000
OFFICE TRAILERS-60' DOUBLEWIDE	-	-	-	-	-	-	-	-	-	-
A). FOR PERSONNEL CLEANING FACILITY & ASSOC.EQUIPMENT	1	EA	$54,000	64	64	$24.41	$54,000	$1,562		$55,562
B). FOR PERSONNEL DECON. & ASSOC. EQUIPMENT.	1	EA	$145,000	160	160	$24.41	$145,000	$3,906		$148,906
C). FOR HEALTH PHYSICS/QUALITY ASSURANCE & ASSOC. EQUIP	1	EA	$67,000	64	64	$24.41	$67,000	$1,562		$68,562
D). FOR ADMINISTRATIVE FACILITY & ASSOC. EQUIPMENT.	1	EA	$57,000	64	64	$24.41	$57,000	$1,562		$58,562
PARKING AREA w/6" CRUSHED STONE(1" MAX.)	1,667	SYD	$14.28	0.408	680	$24.35	$23,805	$16,558		
SUB-TOTAL			371,788		7,707		$435,719	$44,048	$607,297	$1,087,064
PRODUCTIVITY FACTOR(17% ADD TO MANHOURS & DOLLARS) , (#					1,310	$27.12		$35,527	$103,240	$138,767
RENTAL EQUIPMENT MANHOURS					1,210	$26.73		$32,343	$48,400	$80,743
TOTAL	1	LS			10,227		$435,719	$111,918	$758,937	$1,306,574
INDIRECTS:	1	LS								
SMALL TOOLS (3% OF TOTAL COSTS)	1	LS			-				$39,197	$39,197
CLEAN UP LABOR (3% OF TOTAL COSTS)	1	LS			1,783				$39,197	$39,197
TEMP. SERV. & FAC. (5% OF TOTAL COSTS)	1	LS							$65,329	$65,329
FIELD STAFF (4% OF TOTAL COSTS)	1	LS			2,751				$52,263	$52,263
SCAFFOLDING (2% OF TOTAL COSTS)	1	LS			1,050				$26,131	$26,131
SUBTOTAL PROJECT COSTS					15,811		$435,719	$111,918	$981,054	$1,528,691

DRAFT

FERNALD PROJECT

11/26/90

I. T.PROJECT NO.:303317 OP.UNIT #1

ESTIMATOR: F.H.GASLIGHTWALA

AREA EAST OF O.U.#1

PROJ.ENGR:KEN STIER

TYPE OF ESTIMATE:-30%-+30%

PROJ. MGR.DAVID HARMER

FY 91-1 DOLLARS

DESCRIPTION	Qty.	Unit	MAT'L $/UNIT	MAN-HRS /UNIT	TOTAL MAN-HRS	$/HR	$ MATERIAL	$ LABOR	1ST OR 2ND TIER OR EQUP. RNTL	TOTAL COST
CARRYFORWARD					15,811		$435,719	$111,918	$981,054	$1,528,691
HEALTH PHYSICS (20% OF LABOR & S/C COSTS) (#2)					4,372			$22,384	$196,211	$218,595
SALES TAX (5.5% OF MATERIAL COSTS)							$23,965	-	-	$23,965
SUBTOTAL					20,183		$459,684	$134,302	$1,177,265	$1,771,251
CERCLA REQMTS & PERSONNEL PROTECTION(12% OF TOTAL COS					2,099		$55,162	$16,116	$141,272	$212,550
BOND(3%)							$13,791	$4,029	$35,318	$53,138
SUBTOTAL					22,282		$528,637	$154,447	$1,353,855	$2,036,939
MARKUP BY GENERAL CONTRACTOR ON 2ND & 3RD TIER CONTR.									$67,693	$67,693
PROFIT OF PRIME CONTRACTOR (20%) (#5)							$105,727	$30,889	-	$136,616
SUBTOTAL					22,282		$634,364	$185,336	$1,421,548	$2,241,248
CONSTRUCTION MANAGEMENT FEE (24% OF TOTAL COSTS) (#6)							$152,247	$44,481	$341,172	$537,900
SUBTOTAL					22,282		$786,611	$229,817	$1,762,720	$2,779,148
FSAR (SAFETY REPORT),(3% OF LABOR & S/C COSTS BEFORE FEES)					482			$5,560	$42,646	$48,206
EMISSIONS MODELING,(3% OF TOTAL COST BEFORE FEES)					672		$19,031	$5,560	$42,646	$67,237
PROJ.MGMT -WMCO- (8%OF COSTS EXCL. RUST FEE)							$50,749	$14,827	$113,724	$179,300
ENGINEERING (20% (TITLE 1 & 2) OF COST EXCL ALL FEES)					4,483		$126,875	$37,067	$284,310	$448,250
SUBTOTAL					27,918		$983,264	$292,831	$2,246,046	$3,522,141

DRAFT

FERNALD PROJECT

11/26/90

I. T.PROJECT NO.:505317 OP.UNIT #1

ESTIMATOR: F.H.GASLIGHTWALA

AREA EAST OF O.U.#1

PROJ.ENGR:KEN STIER

TYPE OF ESTIMATE: -50%--30%

PROJ. MGR.DAVID HARMER

FY 91-1 DOLLARS

DESCRIPTION	Qty.	Unit	MAT'L $/UNIT	MAN-HRS /UNIT	TOTAL MAN-HRS	RATE	$ MATERIAL	$ LABOR	1ST OR 2ND TIERO EQUP. RNTL	TOTAL COST
CARRY FORWARD					27,918		$985,264	$292,851	$2,246,046	$3,522,141
DECONTAMINATE & DISASSEMBLE SYSTEM					1,600		-	-	$160,000	$160,000
SUBTOTAL COSTS					29,518	-	$985,264	$292,851	$2,406,046	$3,682,141
CONTINGENCY 25%						-	$245,816	$73,208	$601,512	$920,535
TOTAL ESTIMATED COSTS					29,518	-	$1,229,080	$366,059	$3,007,558	$4,602,677
ESCALATION FOR THIS ALTERNATE,(16.5%)(#13)					-	-	$202,798	$60,396	$496,247	$759,441
TOTAL ESTIMATED COSTS, (CAPITAL)					29,518	-	$1,431,878	$426,455	$3,503,805	$5,362,118

NOTES:
1).INCL.ALL CONSTRUCTION PERSONNEL SAFETY TRAINING PER OSHA REQMTS.
2).HEALTH PHYSICS FACTOR 20%PER RAY ROPPEL OF WMCO.
3).THIS IS FOR CERCLA & PERSONNEL PROTECTION REQUIREMENTS
4).2ND & 3RD TIER CONTRACTOR MARKUP TO PRIME 5%
5).PRIME CONTRACTOR'S MARKUP 20%. OF HIS MATERIAL & LABOR COSTS.
6).RUST MANAGEMENT FEE PER RAY ROPPEL OF WMCO.
7).ALL PROTECTIVE CLOTHING, RESPIRATORY EQPT. ETC MUST BE WORN.
8).NO FUNDING FOR CERCLA,FSAR, OR OTHER REGULATORY PROGRAMS INCLUDED.
9) WORK TO BE DONE BY A FIXED PRICE CONTRACTOR AND SUBCONTRACTORS.
10).WORK SCHEDULE IS FIRST SHIFT,ON A 4DAY/WEEK,10 HR./DAY(40 HR. BASIS)
11).DECON TRAILERS NOT PROVIDED. USE EXISTING SITE FACILITIES.
12).LONG TERM MONITORING COSTS NOT INCLUDED IN THIS OPTION.
13)ESCALATION ASSUMES MIDPOINT OF CONSTRUCTION AS FY 94-1.

DRAFT

FERNALD PROJECT

11/26/90

I. T.PROJECT NO.:303317 OP.UNIT #1

ESTIMATOR: F.H.GASLIGHTWALA

WASTE LAYDOWN & TRANSFER FACILITY-OPTION 4A, 5A

PROJ.ENGR:SCOTT McCOMB

TYPE OF ESTIMATE: -30% -+50%

PROJ. MGR.DAVID HARMER

FY 91-1 DOLLARS

DESCRIPTION	Qty.	Unit	MAT'L $/UNIT	MAN-H /UNIT	TOTAL MAN-HRS	$/HR	$ MATERIAL	$ LABOR	1ST OR 2ND TIER OR EQUP. RNTL	TOTAL COST
WASTE LAYDOWN AND TRANSFER FACILITY:	-	-	-	-	-	-	-	-	-	-
FABRIC ARCH STRUCTURE, 120' W X 365' L X 58' H	1	EA	$778,900	1,920	1,920	$24.41	$778,900	$46,867		$825,767
PERSONNEL & EQUIPMENT, SERVICE ENTRANCE (20'x20'	2	EA	-	32	64	$24.41	$0	$1,562		$1,562
w/SINGLE SLIDE DOOR-8'4" HT. X8'-0" WIDTH.	-	-	-	-	-	-	-	-	-	-
REINFORCED CONCRETE SLAB - 43,800 sq. ft., 8" thick	1,081	CYD	$50	0.492	532	$24.41	$54,050	$12,986		$67,056
SODIUM VAPOR LAMP, 400 WATTS, HIGH PRESSURE, 3 PH	25	EA	$580	28	700	$24.74	$134,500	$17,318		$151,818
FREIGHT COST FOR STRUCTURE	1	LS		-	-	-				$12,000
ELECTRICAL WIRING, CONDUIT FOR THESE LIGHTS	1	LS		1,750	1,750	-			$62,500	$10,150
CRANE FOR ERECTING FABRIC ARCH STRUCTURE	1	LS		240	240	$26.73		$6,415	$2,400	$8,815
SCAFFOLDING FOR ERECTING STRUCTURE	1	LS		192	192	$24.41		$4,687	$3,600	$8,287
SUPERVISOR FOR ERECTING STRUCTURE	1	LS		240	240	$24.41		$5,858	$3,280	$9,138
		EA				-				
		EA				-				
SUBTOTAL					5,638		$967,450	$95,693	$71,780	$1,134,925
PRODUCTIVITY FACTOR(17% ADD TO M.H.& S/C DOLLAR					958	$26.73		$25,607	$12,205	$37,810
RENTAL EQUIPMENT MANHOURS					885	$26.73		$23,656	$33,400	$39,056
TOTAL	1	LS			7,481		$967,450	$144,956	$119,385	$1,231,789
INDIRECTS:	1	LS								
SMALL TOOLS (3% OF TOTAL COSTS)	1	LS			-				$36,954	$36,954
CLEAN UP LABOR (3% OF TOTAL COSTS)	1	LS			1,681				$36,954	$36,954
TEMP. SERV. & FAC. (5% OF TOTAL COSTS)	1	LS							$61,589	$61,589
FIELD STAFF (4% OF TOTAL COSTS)	1	LS			2,593				$49,272	$49,272
SCAFFOLDING (2% OF TOTAL COSTS)	1	LS			990				$24,636	$24,636
SUBTOTAL PROJECT COSTS					12,745		$967,450	$144,956	$328,788	$1,441,194
HEALTH PHYSICS (20% OF LABOR & S/C COSTS) (#2)					1,895			$28,991	$65,758	$94,749
SALES TAX (5.5% OF MATERIAL COSTS)							$53,210	-	-	$53,210
SUBTOTAL					14,640		$1,020,660	$173,947	$394,546	$1,589,153
CERCLA REQMTS & PERSONNEL PROTECTION(12% OF TO					910		$122,479	$20,874	$47,345	$190,698
BOND(3%)							$30,620	$5,218	$11,836	$47,674
SUBTOTAL					15,550		$1,173,759	$200,039	$453,727	$1,827,525
MARKUP BY GENERAL CONTRACTOR ON 2ND & 3RD TIE									$22,686	$22,686
PROFIT OF PRIME CONTRACTOR (20%) (#5)							$234,752	$40,008	-	$274,760
SUBTOTAL					15,550		$1,408,511	$240,047	$476,413	$2,124,971
CONSTRUCTION MANAGEMENT FEE (24% OF TOTAL COS							$338,043	$57,611	$114,339	$509,995
SUBTOTAL					15,550		$1,746,554	$297,658	$590,752	$2,634,964
FSAR (SAFETY REPORT),(3% OF LABOR & S/C COSTS BEF					215			$7,201	$14,292	$21,493
EMISSIONS MODELING,(3% OF TOTAL COST BEFORE FEE					637		$42,235	$7,201	$14,292	$63,748
PROJ.MGMT -WMCO- (8%OF COSTS EXCL. RUST FEE)							$112,681	$19,204	$38,113	$169,998
ENGINEERING (20% (TITLE 1 & 2) OF COST EXCL ALL FEE					4,250		$281,702	$48,009	$95,283	$424,994
SUBTOTAL					20,652		$2,183,192	$379,273	$752,732	$3,315,197

FERNALD PROJECT

11/26/90

I. T.PROJECT NO.:903317 OP.UNIT #1

ESTIMATOR: F.H.GASLIGHTWALA

WASTE LAYDOWN & TRANSFER FACILITY-OPTION 4A, 5A

PROJ.ENGR:SCOTT McCOMB

TYPE OF ESTIMATE:-30%→50%

PROJ. MGR.DAVID HARMER

FY 91-1 DOLLARS

DESCRIPTION	Qty.	Unit	MAT'L $/UNIT	MAN-H /UNIT	TOTAL MAN-HRS	RATE	$ MATERIAL	$ LABOR	1ST OR 2ND TIERO EQUP. RNTL	TOTAL COST
CARRY FORWARD					20,652		$2,183,192	$379,273	$752,732	$3,315,197
DECONTAMINATE & DISASSEMBLE SYSTEM					1,600		-	-	$160,000	$160,000
SUBTOTAL COSTS					22,252	-	$2,183,192	$379,273	$912,732	$3,475,197
CONTINGENCY 25%						-	$545,798	$94,818	$228,183	$868,799
TOTAL ESTIMATED COSTS					22,252	-	$2,728,990	$474,092	$1,140,915	$4,343,996
ESCALATION FOR THIS ALTERNATE.(16.5%)(/13)					-	-	$450,285	$78,225	$188,251	$716,759
TOTAL ESTIMATED COSTS, (CAPITAL)					22,252	-	$3,179,275	$552,317	$1,329,166	$5,060,755

NOTES:
1).INCL.ALL CONSTRUCTION PERSONNEL SAFETY TRAINING PER OSHA REQMTS.
2).HEALTH PHYSICS FACTOR 20%PER RAY ROPPEL OF WMCO.
3).THIS IS FOR CERCLA & PERSONNEL PROTECTION REQUIREMENTS
4).2ND & 3RD TIER CONTRACTOR MARKUP TO PRIME 5%
5).PRIME CONTRACTOR'S MARKUP 20%. OF HIS MATERIAL & LABOR COSTS.
6).RUST MANAGEMENT FEE PER RAY ROPPEL OF WMCO.
7).ALL PROTECTIVE CLOTHING, RESPIRATORY EQPT. ETC MUST BE WORN.
8).NO FUNDING FOR CERCLA,FSAR, OR OTHER REGULATORY PROGRAMS INCLUDED.
9) WORK TO BE DONE BY A FIXED PRICE CONTRACTOR AND SUBCONTRACTORS.
10).WORK SCHEDULE IS FIRST SHIFT,ON A 4DAY/WEEK,10 HR./DAY(40 HR. BASIS)
11).DECON TRAILERS NOT PROVIDED. USE EXISTING SITE FACILITIES.
12).LONG TERM MONITORING COSTS NOT INCLUDED IN THIS OPTION.
13)ESCALATION ASSUMES MIDPOINT OF CONSTRUCTION AS FY 94-1.

DRAFT

FERNALD PROJECT

I. T.PROJECT NO.:303317 OP.UNIT #1

BATCH PLANT -ON SITE DISPOSAL-OPTION 4A.

TYPE OF ESTIMATE:-30%-+50%

FY 91-1 DOLLARS

11/26/90

ESTIMATOR: F.H.GASLIGHTWALA

PROJ.ENGR:SCOTT McCOMB

PROJ. MGR.DAVID HARMER

DESCRIPTION	Qty.	Unit	MAT'L $/UNIT	MAN-HRS /UNIT	TOTAL MAN-HR	$/HR	$ MATERIAL	$ LABOR	1ST OR 2ND TIER OR EQUP. RNTL	TOTAL COST
MOBILE UNIT 150 CU.YD. BATCH PLANT	1	EA	$135,000	120	120	$27.12	$135,000	$3,254		$138,254
EXTRA DUST CONTROL EQUIPMENT	1	EA	$13,000	32	32	$27.12	$13,000	$868		$13,868
HIGH ENERGY 150 CU. YD./HR. MIXER	1	EA	$150,000	60	60	$27.12	$150,000	$1,627		$151,627
STORAGE TANK FOR SLURRY,15,000 GALLONS.	2	EA	-	224	448	-			$400,000	$400,000
ELECTRICAL CONNECTIONS	1	LS	$5,000	60	60	$24.74	$5,000	$1,484		$6,484
WATER CONNECTIONS	1	LS	$2,000	60	60	$27.12	$2,000	$1,627		$3,627
FOUNDATIONS FOR SLURRY TANK (#12)	2	LS	$30,000	120	240	$24.41	$60,000	$5,858		$65,858
FOUNDATIONS FOR SILOS(#12)	2	LS	$20,000	80	160	$24.41	$40,000	$3,906		$43,906
ASH & CEMENT TRANSFER STATION w/ PIPING(SUBCONTRACT PRI	1	LS	-	-	480	-			$879,000	$879,000
FORKLIFT TRUCKS-9 TONS CAPACITY	2	EA	$70,000	32	64	$26.73	$140,000	$1,711		$141,711
TRACTOR TRAILER TRUCKS, 20 TONS w/40 FT. FLAT BEDS	4	EA	$79,000	16	64	$26.73	$316,000	$1,711		$317,711
CHILLER-129 TONS AIR COOLED	1	EA	$60,000	60	60	$26.73	$60,000	$1,604		$61,604
AIR HANDLER 51,600 C.F.M. w ELECTRIC HEAT 3,000,000 B.T.U.	1	EA	$25,000	40	40	$27.12	$25,000	$1,085		$26,085
PUMPS CHILLED WATER 420 G.P.M. @ 50' HD.	2	EA	$2,500	32	64	$27.12	$5,000	$1,736		$6,736
PUMPS CONDENSING WATER 360 G.P.M. @ 40' HD	2	EA	$2,500	32	64	$27.12	$5,000	$1,736		$6,736
PIPING-6" CHILLED WATER w/ INSULATION	400	FT.	$27.54	0.92	367	$27.12	$11,016	$9,953		$20,969
PIPING-6" CONDENSING WATER w/ INSULATION	300	FT.	$27.54	0.92	275	$27.12	$8,262	$7,458		$15,720
DUCTWORK	51,600	LBS	0.50	0.19	9,804	$25.46	$25,800	$230,002		$255,802
INSULATION FOR THIS DUCTWORK	40,000	SFT	1.25	0.11	4,240	$27.65	$50,000	$117,151		$167,151
ADDITIONAL FANS TO MAKE-UP VENTILATION, 75,000 C.F.M	4	EA	$10,000	48	192	$23.46	$40,000	$4,504		$44,504
CONTROLS FOR ABOVE SYSTEM	1	LS	$15,000	60	60	$27.74	$15,000	$1,664		$16,664
MISCELANEOUS DAMPERS, LOUVERS	1	LS	$7,000	60	60	$23.46	$7,000	$1,408		$8,408
TRANSFER FACILITY: AT BATCH PLANT	1	LS		-	-		-	-		-
FABRIC ARCH STRUCTURE,50'WIDTH X 50FT.LGTH.X24'HT.	1	EA	$40,000	96	96	$24.41	$40,000	$2,343		$42,343
FREIGHT COSTS FOR 50'WX 50'L X 24'H	1	EA	$603	-	-	-	$603			$603
SCAFFOLDING FOR THIS STRUCTURE	1	LS	$200	16	16	$24.41	$200	$391		$591
SUPERVISOR FOR THIS STRUCTURE	1	LS	-	16	16	-			$1,000	$1,000
SLIDING DOOR, 14'X9'-6" FOR THIS STRUCTURE	2	EA	INCL.	16	32	$24.41		$781		$781
REINFORCED CONCRETE SLAB	62	CY	$50	0.492	31	$24.41	$3,100	$757		$3,857
SODIUM VAPOR LAMP, 400 WATTS, HIGH PRESSURE, 3 PHASE	2	EA	$5,380	28	56	$24.74	$10,760	$1,385		$12,145
ELECTRICAL WIRING, CONDUIT FOR THIS LIGHTS (SUBCONTR.)	1	LS	-	140	140	-			$5,000	$5,000
GROUT PLANT:	1	LS		-	-		-	-	-	-
FABRIC ARCH STRUCTURE,120'WIDTH X 100FT.LGTH.X58'HT.	1	EA	$225,000	160	160	$24.41	$225,000	$3,906		$228,906
FREIGHT COSTS FOR 120'W X 100'L X 58'H	1	EA	$2,897	-	-	-	$2,897			$2,897
SCAFFOLDING FOR THIS STRUCTURE	1	LS	$200	16	16	$24.41	$200	$391		$591
SUPERVISOR FOR THIS STRUCTURE	1	LS	-	16	16	$24.41			$1,000	$1,000
PERSONNEL & EQUPT. SERVICE ENTRANCE, 20'X20'X20'w/8'-4"HT	1	EA	INCL.	32	32	$24.41		$781		$781
WIDTH SINGLE SLIDE DOOR.	-	-	-	-	-	-	-	-	-	-
REINFORCED CONCRETE SLAB	296	CY	$50	0.492	146	$24.41	$14,800	$3,564		$18,364
SODIUM VAPOR LAMP, 400 WATTS, HIGH PRESSURE, 3 PHASE	7	EA	$5,380	28	196	$24.74	$37,660	$4,849		$42,509
ELECTRICAL WIRING, CONDUIT FOR THIS LAMPS (SUBCONTR.)	1	LS	-	490	490	-			$17,500	$17,500
SUMPS-9'X4' w/LINER, HIGH DENSITY POLYETHYLENE	6	EA	$2,700	32	192	$24.41	$16,200	$4,687		$20,887
REINFORCED CONC. FOOTINGS, 30.25 SQ. FT.-12" THICK	1,120	CY	$200	0.400	448	$24.41	$224	$206		$430
SLIDING DOORS:, 14' X9'-6" FOR STRUCTURE	1	EA	INCL	16	16	$24.41		$391		$391
SUB-TOTAL					18,673		$1,464,722	$424,779	$1,303,500	$3,193,001

FERNALD PROJECT

11/26/90

I. T.PROJECT NO.:303317 OP.UNIT #1

ESTIMATOR: F.H.GASLIGHTWALA

BATCH PLANT -ON SITE DISPOSAL-OPTION 4A.

PROJ.ENGR:SCOTT McCOMB

TYPE OF ESTIMATE:-30%-+30%

PROJ. MGR.DAVID HARMER

FY 91-1 DOLLARS

DESCRIPTION	Qty.	Unit	MAT'L $/UNIT	MAN-HRS /UNIT	TOTAL MAN-HR	$/HR	$ MATERIAL	$ LABOR	1ST OR 2ND TIER OR EQUP. RNTL	TOTAL COST
CARRYOVER FROM PREVIOUS PAGE					18,673		$1,464,722	$424,779	$1,303,500	$3,193,001
RAW MATERIALS STORAGE FACILITY:	1	LS		-	-		-	-	-	-
PRE-ENGINEERED BLDG.70'X70'X30'EAVES HT.w/BUTLERRIB, DOU	1	EA	-	-	60				$118,000	$118,000
SLIDE DOOR14'-4"X18' & BUTLERRIB II WALL PANELS, 26GA. &	-	-	INCL.	-	-		-	-	-	-
BUTLERRIB II ROOF SYSTEM-26 GA.	-	-	INCL.	-	-		-	-	-	-
REINFORCED CONCRETE SLAB	121	CY	$50	0.492	60	$24.41	$6,050	$1,465	-	$7,515
SODIUM VAPOR LAMP, 400 WATTS, HIGH PRESSURE, 3 PHASE	3	EA	$5,380	28	84	$24.74	$16,140	$2,078		$18,218
ELECTRICAL WIRING, CONDUIT FOR THIS LAMPS (SUBCONTRACT)	1	LS	-	210	210	-			$7,500	$7,500
MISCELLANEOUS ITEMS:	1	LS		-	-		-	-	-	-
REINFORCED CONCRETE APRON (OUTSIDE TRANSFER FACILITY)	49	CY	$50	0.327	16	$24.41	$2,444	$391	-	$2,835
REINFORCED CONCRETE APRON (OUTSIDE RAW MATERIAL STOR	34	CY	$50	0.327	12	$24.41	$1,711	$293	-	$2,004
SUBTOTAL THIS PAGE	1	LS			19,115		$1,491,067	$429,006	$1,429,000	$3,349,073
PRODUCTIVITY FACTOR(17% ADD TO MANHOURS & DOLLARS) ,U					3,250	$27.12		$88,140	$242,930	$331,070
RENTAL EQUIPMENT MANHOURS					3,001	$26.73		$80,217	$120,040	$200,257
TOTAL	1	LS			25,366		$1,491,067	$597,363	$1,791,970	$3,880,400

DRAFT

FERNALD PROJECT

11/26/90

I. T.PROJECT NO.:303317 OP.UNIT #1

ESTIMATOR: F.H.GASLIGHTWALA

BATCH PLANT -ON SITE DISPOSAL-OPTION 4A.

PROJ.ENGR:SCOTT McCOMB

TYPE OF ESTIMATE: -30%-+30%

PROJ. MGR.DAVID HARMER

FY 91-1 DOLLARS

DESCRIPTION	Qty.	Unit	MAT'L $/UNIT	MAN-HRS /UNIT	TOTAL MAN-HR	$/HR	$ MATERIAL	$ LABOR	1ST OR 2ND TIER OR EQUP. RNTL	TOTAL COST
CARRYOVER FROM PREVIOUS PAGE					25,366		$1,491,067	$597,363	$1,791,970	$3,880,400
SMALL TOOLS (3% OF TOTAL COSTS)	1	LS			-				$116,412	$116,412
CLEAN UP LABOR (3% OF TOTAL COSTS)	1	LS			5,296				$116,412	$116,412
TEMP. SERV. & FAC. (5% OF TOTAL COSTS)	1	LS							$194,020	$194,020
FIELD STAFF (4% OF TOTAL COSTS)	1	LS			8,169				$155,216	$155,216
SCAFFOLDING (2% OF TOTAL COSTS)	1	LS			3,119				$77,608	$77,608
SUBTOTAL PROJECT COSTS					41,950		$1,491,067	$597,363	$2,451,638	$4,540,068
HEALTH PHYSICS (20% OF LABOR & S/C COSTS) (#2)					12,196			$119,473	$490,328	$609,800
SALES TAX (5.5% OF MATERIAL COSTS)							$82,009	-	-	$82,009
SUBTOTAL					54,146		$1,573,076	$716,836	$2,941,966	$5,231,877
CERCLA REQMTS & PERSONNEL PROTECTION(12% OF TOTAL COS					5,854		$188,769	$86,020	$353,036	$627,825
BOND(3%)							$47,192	$21,503	$88,259	$156,956
SUBTOTAL					60,001		$1,809,037	$824,361	$3,383,261	$6,016,658
MARKUP BY GENERAL CONTRACTOR ON 2ND & 3RD TIER CONTR									$169,163	$169,163
PROFIT OF PRIME CONTRACTOR (20%) (#5)							$361,807	$164,872	-	$526,679
SUBTOTAL					60,001		$2,170,844	$989,233	$3,552,424	$6,712,500
CONSTRUCTION MANAGEMENT FEE (24% OF TOTAL COSTS) (#6)							$521,003	$237,416	$852,582	$1,611,001
SUBTOTAL					60,001		$2,691,847	$1,226,649	$4,405,006	$8,323,501
FSAR (SAFETY REPORT),(3% OF LABOR & S/C COSTS BEFORE FEES)					1,363			$29,677	$106,573	$136,250
EMISSIONS MODELING,(3% OF TOTAL COST BEFORE FEES)					2,014		$65,125	$29,677	$106,573	$201,375
PROJ.MGMT -WMCO- (8%OF COSTS EXCL. RUST FEE)							$173,668	$79,139	$284,194	$537,001
ENGINEERING (20% (TITLE 1 & 2) OF COST EXCL ALL FEES)					13,425		$434,169	$197,847	$710,485	$1,342,501
SUBTOTAL					76,802		$3,364,809	$1,562,989	$5,612,831	$10,540,628

DRAFT

FERNALD PROJECT

11/26/90

I. T.PROJECT NO.:303317 OP.UNIT #1

ESTIMATOR: F.H.GASLIGHTWALA

BATCH PLANT -ON SITE DISPOSAL-OPTION 4A.

PROJ.ENGR:SCOTT McCOMB

TYPE OF ESTIMATE:-50%→50%

PROJ. MGR.DAVID HARMER

FY 91-1 DOLLARS

DESCRIPTION	Qty.	Unit	MAT'L $/UNIT	MAN-HRS /UNIT	TOTAL MAN-HR	RATE	$ MATERIAL	$ LABOR	1ST OR 2ND TIER EQUP. RNTL	TOTAL COST
CARRY FORWARD					76,802		$3,364,809	$1,562,989	$5,612,831	$10,540,628
DECONTAMINATE & DISASSEMBLE SYSTEM					1,600		-	-	$160,000	$160,000
SUBTOTAL COSTS					78,402	-	$3,364,809	$1,562,989	$5,772,831	$10,700,628
CONTINGENCY 25%						-	$841,202	$390,747	$1,443,208	$2,675,157
TOTAL ESTIMATED COSTS					78,402	-	$4,206,011	$1,953,736	$7,216,038	$13,375,785
ESCALATION FOR THIS ALTERNATE,(16.5%)(#13)					-	-	$693,992	$322,366	$1,190,646	$2,207,004
TOTAL ESTIMATED COSTS, (CAPITAL)					78,402	-	$4,900,003	$2,276,102	$8,406,684	$15,582,789

NOTES:
1).INCL.ALL CONSTRUCTION PERSONNEL SAFETY TRAINING PER OSHA REQMTS.
2).HEALTH PHYSICS FACTOR 20%PER RAY ROPPEL OF WMCO.
3).THIS IS FOR CERCLA & PERSONNEL PROTECTION REQUIREMENTS
4).2ND & 3RD TIER CONTRACTOR MARKUP TO PRIME 5%
5).PRIME CONTRACTOR'S MARKUP 20%. OF HIS MATERIAL & LABOR COSTS.
6).RUST MANAGEMENT FEE PER RAY ROPPEL OF WMCO.
7).ALL PROTECTIVE CLOTHING, RESPIRATORY EQPT. ETC MUST BE WORN.
8).NO FUNDING FOR CERCLA,FSAR, OR OTHER REGULATORY PROGRAMS INCLUDED.
9) WORK TO BE DONE BY A FIXED PRICE CONTRACTOR AND SUBCONTRACTORS.
10).WORK SCHEDULE IS FIRST SHIFT,ON A 4DAY/WEEK,10 HR./DAY(40 HR. BASIS)
11).DECON TRAILERS NOT PROVIDED. USE EXISTING SITE FACILITIES.
12).LONG TERM MONITORING COSTS NOT INCLUDED IN THIS OPTION.
13)ESCALATION ASSUMES MIDPOINT OF CONSTRUCTION AS FY 94-1.

DRAFT

SUMMARY OF COSTS

OP. UNIT #1. ALTERNATE 4A

REMOVAL, SLUDGE TREATMENT AND ON-SITE DISPOSAL

CAPITAL COSTS

ITEM	TOTAL COST
BATCH PLANT	$15,582,789
DRUM HANDLING	$3,558,371
SITE PREP.:-EAST OF OPERABLE UNIT 1.	$5,362,118
PIT DREDGING	$965,965
RAW MATERIAL TRANSFER STATION & R.R. TRACK	$710,414
SEGREGATION FACILITY	$14,059,585
SLUDGE & WATER TREATMENT PLANT.	$23,279,985
WASTE LAYDOWN - TRANSFER FACILITY.	$5,060,755
TOTAL CAPITAL COSTS	$68,579,982

SOME MAJOR CAPITAL COST ITEMS

ITEM	TOTAL COST*
STORAGE TANK FOR SLURRY	$1,606,304
ASH & CEMENTTRANSFER STATION	$3,529,853
FABRIC ARCH STRUCTURES	$10,093,691
PRE-ENGINEERED BUILDING	$1,198,309
MECHANICAL EXCAVATING & LIFTING EQUIPMENT	$6,103,661
REVERSE OSMOSIS	$2,163,411
TANK-800,000 GALLONS FOR TREATMENT FACILIT	$4,750,320
PIPE-6" DOUBLEWALL CARBON STEEL.	$1,235,276
OTHER ITEMS	$37,879,157
TOTAL COST	$68,579,982

*: TOTAL COSTS ARE DIRECT COSTS OF ITEM MULTIPLIED BY FACTOR TO COVER ALL ADD-ONS.

DRAFT

SUMMARY OF COSTS

OP. UNIT #1. ALTERNATE 4A

REMOVAL, SLUDGE TREATMENT AND ON-SITE DISPOSAL

CAPITAL COSTS

ITEM	TOTAL COST
BATCH PLANT	$15,582,789
DRUM HANDLING	$3,558,571
SITE PREP.:-EAST OF OPERABLE UNIT 1.	$5,362,118
PIT DREDGING	$965,965
RAW MATERIAL TRANSFER STATION & R.R. TRACK	$710,414
SEGREGATION FACILITY	$14,059,585
SLUDGE & WATER TREATMENT PLANT.	$23,279,985
TUMULUS	$300,043,000
WASTE LAYDOWN - TRANSFER FACILITY.	$5,060,755
TOTAL CAPITAL COSTS	$368,622,982

DRAFT

FERNALD PROJECT

11/30/90

I. T.PROJECT NO.:303317 OP.UNIT #1

ESTIMATOR: F.H.GASLIGHTWALA

VIT.DATA-OPTIONS 4B.

PROJ.ENGR:SCOTT McCOMB

TYPE OF ESTIMATE:-30%-+50%

PROJ. MGR.DAVID HARMER

FY 91-1 DOLLARS

DESCRIPTION	Qty.	Unit	MAT'L $/UNIT	MAN-H /UNIT	TOTAL MAN-HRS	$/HR	$ MATERIAL	$ LABOR	1ST OR 2ND TIER OR EQUP. RNTL	TOTAL COST
CARRYFORWARD	1	LS			15,956		$971,675	$334,281	$383,025	$1,688,981
INDIRECTS:	1	LS								
SMALL TOOLS (3% OF TOTAL COSTS)	1	LS			-				$50,669	$50,669
CLEAN UP LABOR (3% OF TOTAL COSTS)	1	LS			2,305				$50,669	$50,669
TEMP. SERV. & FAC. (5% OF TOTAL COSTS)	1	LS							$84,449	$84,449
FIELD STAFF (4% OF TOTAL COSTS)	1	LS			3,556				$67,559	$67,559
SCAFFOLDING (2% OF TOTAL COSTS)	1	LS			1,358				$33,780	$33,780
SUBTOTAL PROJECT COSTS					25,175		$971,675	$334,281	$670,151	$1,976,107
HEALTH PHYSICS (20% OF LABOR & S/C COSTS) (#2)					4,018			$66,856	$134,030	$200,886
SALES TAX (5.5% OF MATERIAL COSTS)							$53,442	-	-	$53,442
SUBTOTAL					27,193		$1,025,117	$401,137	$804,181	$2,230,435
CERCLA REQMTS & PERSONNEL PROTECTION(12% OF TOTAL COS					1,929		$123,014	$48,136	$96,502	$267,652
BOND(3%)							$30,754	$12,034	$24,125	$66,913
SUBTOTAL					29,122		$1,178,885	$461,307	$924,808	$2,565,000
MARKUP BY GENERAL CONTRACTOR ON 2ND & 3RD TIER CONTR.									$46,240	$46,240
PROFIT OF PRIME CONTRACTOR (20%) (#3)							$235,777	$92,261	-	$328,038
SUBTOTAL					29,122		$1,414,662	$553,568	$971,048	$2,939,278
CONSTRUCTION MANAGEMENT FEE (24% OF TOTAL COSTS) (#6)							$339,519	$132,856	$233,052	$705,427
SUBTOTAL					29,122		$1,754,181	$686,424	$1,204,100	$3,644,705
FSAR (SAFETY REPORT),(3% OF LABOR & S/C COSTS BEFORE FEES)					457			$16,607	$29,131	$45,738
EMISSIONS MODELING,(3% OF TOTAL COST BEFORE FEES)					882		$42,440	$16,607	$29,131	$88,178
PROJ.MGMT -WMCO- (8%OF COSTS EXCL. RUST FEE)							$113,173	$44,285	$77,684	$235,142
ENGINEERING (20% (TITLE 1 & 2) OF COST EXCL ALL FEES)					5,879		$282,932	$110,714	$194,210	$587,856
SUBTOTAL					36,339		$2,192,726	$874,637	$1,534,256	$4,601,619

DRAFT

FERNALD PROJECT

11/30/90

I. T.PROJECT NO.:305317 OP.UNIT #1

ESTIMATOR: F.H.GASLIGHTWALA

VIT.DATA-OPTIONS 4B.

PROJ.ENGR:SCOTT McCOMB

TYPE OF ESTIMATE:-30%-+50%

PROJ. MGR.DAVID HARMER

FY 91-1 DOLLARS

DESCRIPTION	Qty.	Unit	MAT'L $/UNIT	MAN-H /UNIT	TOTAL MAN-HRS	RATE	$ MATERIAL	$ LABOR	1ST OR 2ND TIERO EQUP. RNTL	TOTAL COST
CARRY FORWARD					36,339		$2,192,726	$874,637	$1,534,256	$4,601,619
DECONTAMINATE & DISASSEMBLE SYSTEM					1,600		-	-	$160,000	$160,000
SUBTOTAL COSTS					37,939	-	$2,192,726	$874,637	$1,694,256	$4,761,619
CONTINGENCY 25%						-	$548,182	$218,659	$423,564	$1,190,405
TOTAL ESTIMATED COSTS					37,939	-	$2,740,908	$1,093,297	$2,117,820	$5,952,024
ESCALATION FOR THIS ALTERNATE.(16.5%X/13)					-	-	$452,250	$180,394	$349,460	$982,084
TOTAL ESTIMATED COSTS. (CAPITAL)					37,939	-	$3,193,158	$1,273,691	$2,467,280	$6,934,108

NOTES:
1).INCL.ALL CONSTRUCTION PERSONNEL SAFETY TRAINING PER OSHA REQMTS.
2).HEALTH PHYSICS FACTOR 20%PER RAY ROPPEL OF WMCO.
3).THIS IS FOR CERCLA & PERSONNEL PROTECTION REQUIREMENTS
4).2ND & 3RD TIER CONTRACTOR MARKUP TO PRIME 5%
5).PRIME CONTRACTOR'S MARKUP 20%. OF HIS MATERIAL & LABOR COSTS.
6).RUST MANAGEMENT FEE PER RAY ROPPEL OF WMCO.
7).ALL PROTECTIVE CLOTHING, RESPIRATORY EQPT. ETC MUST BE WORN.
8).NO FUNDING FOR CERCLA,FSAR, OR OTHER REGULATORY PROGRAMS INCLUDED.
9) WORK TO BE DONE BY A FIXED PRICE CONTRACTOR AND SUBCONTRACTORS.
10).WORK SCHEDULE IS FIRST SHIFT,ON A 4DAY/WEEK,10 HR./DAY(40 HR. BASIS)
11).DECON TRAILERS NOT PROVIDED. USE EXISTING SITE FACILITIES.
12).LONG TERM MONITORING COSTS NOT INCLUDED IN THIS OPTION.
13)ESCALATION ASSUMES MIDPOINT OF CONSTRUCTION AS FY 94-1.

DRAFT

FERNALD PROJECT

I. T.PROJECT NO.:503317 OP.UNIT #1

VIT.DATA-OPTIONS 4B.

TYPE OF ESTIMATE:-50%→50%

FY 91-1 DOLLARS

11/30/90

ESTIMATOR: P.H.OASLIGHTWALA

PROJ.ENGR:SCOTT McCOMB

PROJ. MGR.DAVID HARMER

DESCRIPTION	Qty.	Unit	MAT'L $/UNIT	MAN-H /UNIT	TOTAL MAN-HRS	$/HR	$ MATERIAL	$ LABOR	1ST OR 2ND TIER OR EQUP. RNTL	TOTAL COST
VITRIFICATION FACILITY										
PRE-ENGINEERED METAL BLDG, 365'X120'X24', w/BUTLER II ROOF	1	EA	$378,091	6,740	6,740	$24.41	$378,091	$164,525	$50,325	$592,959
(26 GAGE), 4' ENDWALL OVERHANG.										
REINFORCED CONCRETE SLAB - 43,800 sq. ft., 12" thick	1,622	CY	$50	0.492	798	$24.41	$81,100	$19,479	$0	$100,579
SODIUM VAPOR LAMP, 400 WATTS, HIGH PRESSURE, 3 PHASE	25	EA	$5,380	28	700	$24.74	$134,500	$17,318	$0	$151,818
ELECTRICAL WIRING, CONDUIT FOR THESE LIGHTS	1	LS	-	1,750	1,750	-	$0	$0	$62,300	$62,300
TRANSFER FACILITY: AT VITRIFICATION FACILITY	1	LS		-	-		-	-		-
FABRIC ARCH STRUCTURE,50'WIDTH X 50FT.LGTH.X24'HT.	1	EA	$40,000	96	96	$24.41	$40,000	$2,343		$42,343
FREIGHT COSTS FOR 50'WX 50'L X 24'H	1	EA	$605	-	-	-	$605			$605
SCAFFOLDING FOR THIS STRUCTURE	1	LS	$200	16	16	$24.41	$200	$391		$591
SUPERVISOR FOR THIS STRUCTURE	1	LS	-	16	16	-			$1,000	$1,000
SLIDING DOOR, 14'X9'-6" FOR THIS STRUCTURE	2	EA	INCL.	16	32	$24.41		$781		$781
REINFORCED CONCRETE SLAB	62	CY	$50	0.492	31	$24.41	$3,100	$757		$3,857
SODIUM VAPOR LAMP, 400 WATTS, HIGH PRESSURE, 3 PHASE	2	EA	$5,380	28	56	$24.74	$10,760	$1,385		$12,145
ELECTRICAL WIRING, CONDUIT FOR THIS LIGHTS (SUBCONTR.)	1	LS	-	140	140	-			$5,000	$5,000
MIXING FACILITY	1	LS		-	-		-	-	-	-
FABRIC ARCH STRUCTURE,120'WIDTH X 100FT.LGTH.X58'HT.	1	EA	$225,000	96	96	$24.41	$225,000	$2,343		$227,343
FREIGHT COSTS FOR 120'W X 100'L X 58'H	1	EA	$2,897	-	-	-	$2,897			$2,897
SCAFFOLDING FOR THIS STRUCTURE	1	LS	$200	16	16	$24.41	$200	$391		$591
SUPERVISOR FOR THIS STRUCTURE	1	LS	-	16	16	-			$1,000	$1,000
PERSONNEL & EQUPT. SERVICE ENTRANCE, 20'X20'X20'w/8'-4"HT	1	EA	INCL.	32	32	$24.41		$781		$781
WIDTH SINGLE SLIDE DOOR.	-	-	-	-	-	-	-	-	-	-
REINFORCED CONCRETE SLAB	296	CY	$50	0.492	146	$24.41	$14,800	$3,564		$18,364
SODIUM VAPOR LAMP, 400 WATTS, HIGH PRESSURE, 3 PHASE	7	EA	$5,380	28	196	$24.74	$37,660	$4,849		$42,509
ELECTRICAL WIRING, CONDUIT FOR THIS LAMPS (SUBCONTR.)	1	LS	-	490	490	-			$17,500	$17,500
SUMPS-9'X4' w/LINER, HIGH DENSITY POLYETHYLENE	6	EA	$2,700	32	192	$24.41	$16,200	$4,687		$20,887
FREIGHT FOR THE STRUCTURE	1	LS	INCL.	-	-	-		$0		$0
REINFORCED CONC. FOOTINGS, 30.25 SQ. FT.-12" THICK	1.120	CY	$200	0.400	8	$24.41	$224	$206		$430
SLIDING DOORS:, 14' X9'-6" FOR STRUCTURE	1	EA	INCL.	16	16	$24.41	$0	$391	$0	$391
RAW MATERIALS STORAGE FACILITY										
PRE-ENGINEERED METAL BLDG, 70' X 70' X 30,EAVES HT.w/BUTL	1	EA	-	60	60	-	-	-	$118,000	$118,000
DOUBLE SLIDE DOOR, 14'-4" X18' & BUTLERRIB II WALL PANELS,	-	-	-	-	-	-	-	-	-	-
GAGE & BUTLERRIB II ROOF SYSTEM-26 GAGE.	-	-	-	-	-	-	-	-	-	-
REINFORCED CONC. SLAB	121	CY	$50	0.492	60	$24.41	$6,050	$1,453		$7,503
SODIUM VAPOR LAMP, 400 WATTS, HIGH PRESSURE, 3 PHASE	3	EA	$5,380	28	84	$24.74	$16,140	$2,078		$18,218
ELECTRICAL WIRING, CONDUIT FOR LIGHTS.	1	LS	-	210	210	-	-	-	$7,500	$7,500
REINFORCED CONCRETE APRON (OUTSIDE TRANSFER FACILITY)	49	CY	$50	0.327	16	$24.41	$2,450	$391		$2,841
REINFORCED CONCRETE APRON (OUTSIDE RAW MATERIAL)	54	CY	$50	0.327	11	$24.41	$1,700	$271		$1,971
SUBTOTAL					12,024		$971,675	$228,582	$262,825	$1,462,882
PRODUCTIVITY FACTOR(17% ADD TO MANHOURS & DOLLARS) . (#					2,044	$27.12		$55,433	$44,680	$100,113
RENTAL EQUIPMENT MANHOURS					1,888	$26.73		$50,466	$75,520	$125,986
SUBTOTAL	1	LS			15,856		$971,675	$334,281	$383,025	$1,688,981

FERNALD PROJECT

11/30/90

I. T.PROJECT NO.:505517 OP.UNIT #1

ESTIMATOR: F.H.GASLIGHTWALA

VIT.DATA-OPTIONS 4B.

PROJ.ENGR:SCOTT McCOMB

TYPE OF ESTIMATE: -30% -+50%

PROJ. MGR.DAVID HARMER

FY 91-1 DOLLARS

DESCRIPTION	Qty.	Unit	MAT'L $/UNIT	MAN-H /UNIT	TOTAL MAN-HRS	$/HR	$ MATERIAL	$ LABOR	1ST OR 2ND TIER OR EQUP. RNTL	TOTAL COST
CARRYFORWARD	1	LS			15,956		$971,675	$334,281	$383,025	$1,688,981
INDIRECTS:	1	LS								
SMALL TOOLS (3% OF TOTAL COSTS)	1	LS			-				$50,669	$50,669
CLEAN UP LABOR (3% OF TOTAL COSTS)	1	LS			2,305				$50,669	$50,669
TEMP. SERV. & FAC. (5% OF TOTAL COSTS)	1	LS							$84,449	$84,449
FIELD STAFF (4% OF TOTAL COSTS)	1	LS			3,556				$67,559	$67,559
SCAFFOLDING (2% OF TOTAL COSTS)	1	LS			1,358				$33,780	$33,780
SUBTOTAL PROJECT COSTS					25,175		$971,675	$334,281	$670,151	$1,976,107
HEALTH PHYSICS (20% OF LABOR & S/C COSTS) (#2)					4,018			$66,856	$134,030	$200,886
SALES TAX (5.5% OF MATERIAL COSTS)							$53,442	-	-	$53,442
SUBTOTAL					27,193		$1,025,117	$401,137	$804,181	$2,230,435
CERCLA REQMTS & PERSONNEL PROTECTION(11% OF TOTAL COS					1,929		$123,014	$48,136	$96,302	$267,652
BOND(3%)							$30,754	$12,034	$24,125	$66,913
SUBTOTAL					29,122		$1,178,885	$461,307	$924,808	$2,565,000
MARKUP BY GENERAL CONTRACTOR ON 2ND & 3RD TIER CONTR									$46,240	$46,240
PROFIT OF PRIME CONTRACTOR (20%) (#5)							$235,777	$92,261	-	$328,038
SUBTOTAL					29,122		$1,414,662	$555,568	$971,048	$2,939,278
CONSTRUCTION MANAGEMENT FEE (24% OF TOTAL COSTS) (#6)							$339,519	$132,856	$233,052	$705,427
SUBTOTAL					29,122		$1,754,181	$686,424	$1,204,100	$3,644,705
FSAR (SAFETY REPORT),(3% OF LABOR & S/C COSTS BEFORE FEES)					457			$16,607	$29,131	$45,738
EMISSIONS MODELING,(3% OF TOTAL COST BEFORE FEES)					882		$42,440	$16,607	$29,131	$88,178
PROJ.MGMT -WMCO- (8%OF COSTS EXCL. RUST FEE)							$113,173	$44,285	$77,684	$235,142
ENGINEERING (20% (TITLE 1 & 2) OF COST EXCL ALL FEES)					5,879		$282,932	$110,714	$194,210	$587,856
SUBTOTAL					36,339		$2,192,726	$874,637	$1,534,256	$4,601,619

DRAFT

FERNALD PROJECT

I. T.PROJECT NO.:303317 OP.UNIT #1

VIT.DATA-OPTIONS 4B.

TYPE OF ESTIMATE:-30%--+30%

FY 91-1 DOLLARS

11/30/90

ESTIMATOR: F.H.GASLIGHTWALA

PROJ.ENGR:SCOTT McCOMB

PROJ. MGR.DAVID HARMER

DESCRIPTION	Qty.	Unit	MAT'L $/UNIT	MAN-H /UNIT	TOTAL MAN-HRS	RATE	$ MATERIAL	$ LABOR	1ST OR 2ND TIERO EQUP. RNTL	TOTAL COST
CARRY FORWARD					36,339		$2,192,726	$874,637	$1,534,256	$4,601,619
DECONTAMINATE & DISASSEMBLE SYSTEM					1,600		-	-	$160,000	$160,000
SUBTOTAL COSTS					37,939	-	$2,192,726	$874,637	$1,694,256	$4,761,619
CONTINGENCY 25%						-	$548,182	$218,659	$423,564	$1,190,405
TOTAL ESTIMATED COSTS					37,939	-	$2,740,908	$1,093,297	$2,117,820	$5,952,024
ESCALATION FOR THIS ALTERNATE,(16.5%)(#13)					-	-	$452,250	$180,394	$349,440	$982,084
TOTAL ESTIMATED COSTS, (CAPITAL)					37,939	-	$3,193,158	$1,273,691	$2,467,260	$6,934,108

NOTES:
1).INCL.ALL CONSTRUCTION PERSONNEL SAFETY TRAINING PER OSHA REQMTS.
2).HEALTH PHYSICS FACTOR 20%PER RAY ROPPEL OF WMCO.
3).THIS IS FOR CERCLA & PERSONNEL PROTECTION REQUIREMENTS
4).2ND & 3RD TIER CONTRACTOR MARKUP TO PRIME 5%
5).PRIME CONTRACTOR'S MARKUP 20%. OF HIS MATERIAL & LABOR COSTS.
6).RUST MANAGEMENT FEE PER RAY ROPPEL OF WMCO.
7).ALL PROTECTIVE CLOTHING, RESPIRATORY EQPT. ETC MUST BE WORN.
8).NO FUNDING FOR CERCLA,FSAR, OR OTHER REGULATORY PROGRAMS INCLUDED.
9) WORK TO BE DONE BY A FIXED PRICE CONTRACTOR AND SUBCONTRACTORS.
10).WORK SCHEDULE IS FIRST SHIFT,ON A 4DAY/WEEK,10 HR./DAY(40 HR. BASIS)
11).DECON TRAILERS NOT PROVIDED. USE EXISTING SITE FACILITIES.
12).LONG TERM MONITORING COSTS NOT INCLUDED IN THIS OPTION.
13)ESCALATION ASSUMES MIDPOINT OF CONSTRUCTION AS FY 94-1.

DRAFT

FERNALD PROJECT — 11/30/90

I.T.CORP.PROJ.# 303317 — ESTIMATOR: F.H.GASLIGHTWALA

COSTS: OP. UNIT 1.- VITRIFICATION, ON-SITE,CAPITAL, ALT4B — PROJ.ENGR:DARRELL DROUHARD

TYPE OF ESTIMATE:-30%-+50%

FY 90 DOLLARS

DESCRIPTION	Qty.	Unit	MAT'L $/UNIT	TOTAL MAN-HRS	$/HR	$ MATERIAL	$ LABOR	1ST OR 2NDTIER OR EQUPT. RNTL	TOTAL COST
VITRIFICATION EQUIPMENT:	-	-							-
FEED HOPPER	1	EA.	$340,000	2,400	$26.73	$340,000	$64,152		$404,152
CONVEYORS-75' TO 400' RANGE IN LENGTH	5	EA.	INCL	INCL	$26.73	-	-		-
DUST ABATEMENT UNIT	1	EA.	$1,125,000	8,552	$26.73	$1,125,000	$225,000		$1,350,000
MULTI HOPPERS & ROTARY FEED VALVES	1	LS	$375,000	2,851	$26.73	$375,000	$75,000		$450,000
MELTERS	1	LS	$33,750,000	256,556	$26.73	$33,750,000	$6,857,742		$40,607,742
OFF-GAS TREATMENT	1	LS	$2,625,000	19,954	$26.73	$2,625,000	$525,000		$3,150,000
QUENCHER, FRIT CONVEYOR & FRIT BIN	1	EA.	$750,000	5,701	$26.73	$750,000	$150,000		$900,000
SUBTOTAL OF VITRIFICATION COSTS	1	LS	-	296,014		$38,965,000	$7,896,894	-	$46,861,894
INSTRUMENTATION & CONTROL(15% OF VITRIFICATION MAT.	1	LS	$4,000,000	72,639	$24.74	$4,000,000	$1,797,089		$5,797,089
PROCESS PIPING(12% OF VITRIFICATION MATERIAL COSTS)	1	LS	$3,100,000	58,139	$27.12	$3,100,000	$1,576,730		$4,676,730
ELECTRICAL WORK(20% OF VITRIFICATION MATERIAL COSTS	1	LS	$5,200,000	104,923	$24.74	$5,200,000	$2,595,795		$7,795,795
LICENSING(2% OF VITRIFICATION MATERIAL COSTS)	1	LS	-	5,195	-	-	$779,300		$779,300
AUXILIARIES (20% OF VITRIFICATION MATERIAL COSTS)	1	LS	$5,200,000	104,923	$24.74	$5,200,000	$2,595,795		$7,795,795
SUBTOTAL OF POWER & INSTRUMENTATION COSTS	1	LS	-	345,819		$17,500,000	$9,344,709	-	$26,844,709
ON-SITE SUBSTATION	1	LS	$1,400,250	6,667	$30.00	$1,400,250	$200,000		$1,600,250
MODIFICATION OF WILEY STATION	1	LS	$1,750,000	8,333	$30.00	$1,750,000	$249,990		$1,999,990
POWER LINE	1	LS	$328,125	1,562	$30.00	$328,125	$46,860		$374,985
TRUCKS-15 TON CAPACITY	4	EA.	$30,000	128	$26.73	$120,000	$5,421		$125,421
CRANES-15 TONS-20 TONS CAPACITY	2	EA.	$75,000	80	$26.73	$150,000	$2,138		$152,138
SUBTOTAL OF MODIFICATION & MISCELLANEOUS COSTS	1	LS	-	16,770		$3,748,375	$502,409	-	$4,250,784
SUBTOTAL THIS PAGE	1	LS	-	658,603		$60,213,375	$17,744,012	-	$77,957,387
PRODUCTIVITY FACTOR(17% ADD TO MANHOURS& S/C DOLL		LS		111,962	$26.73		$2,992,744	-	$2,992,744
EQUIPMENT RENTAL HOURS	1	LS		98,790	$26.73		$2,640,657	-	$2,640,657
SUBTOTAL				869,355		$60,213,375	$23,377,413	-	$83,590,788

FERNALD PROJECT

11/30/90

I.T.CORP.PROJ.# 503517

ESTIMATOR: F.H.GASLIGHTWALA

COSTS: OP. UNIT 1.- VITRIFICATION, ON-SITE,CAPITAL, ALT4B

PROJ.ENGR:DARRELL DROUHARD

TYPE OF ESTIMATE:-30%-+50%

FY 90 DOLLARS

DESCRIPTION	Qty.	Unit	MAT'L $/UNIT	TOTAL MAN-HRS	$/HR	$ MATERIAL	$ LABOR	1ST OR 2NDTIER OR EQUPT. RNTL	TOTAL COST
CARRYOVER FROM PREVIOUS PAGE				869,555		$60,213,375	$23,377,413	-	$83,590,788
INDIRECTS:	1	LS							
SMALL TOOLS (3% OF TOTAL COSTS)	1	LS			-			$2,507,724	$2,507,724
CLEAN UP LABOR (3% OF TOTAL COSTS)	1	LS		114,091				$2,507,724	$2,507,724
TEMP. SERV. & FAC. (5% OF TOTAL COSTS)	1	LS						$4,179,539	$4,179,539
FIELD STAFF (4% OF TOTAL COSTS)	1	LS		175,981				$3,343,632	$3,343,632
SCAFFOLDING (2% OF TOTAL COSTS)	1	LS		67,195				$1,671,816	$1,671,816
SUBTOTAL PROJECT COSTS				1,226,622		$60,213,375	$25,377,413	$14,210,435	$97,801,223
HEALTH PHYSICS (20% OF LABOR & S/C COSTS) (#3)				150,351			$4,675,483	$2,842,087	$7,517,570
SALES TAX (5.5% OF MATERIAL COSTS)						$3,311,756		-	$3,311,756
SUBTOTAL				1,376,975		$63,525,111	$28,052,896	$17,052,522	$108,630,529
CERCLA REQMTS & PERSONNEL PROTECTION(1% OF TOTAL C				6,014		$635,251	$280,529	$170,525	$1,086,305
BOND(3%)						$1,905,753	$841,587	$511,576	$3,258,916
SUBTOTAL				1,382,987		$66,066,115	$29,175,012	$17,734,625	$112,975,750
MARKUP BY GENERAL CONTRACTOR ON 2ND & 3RD TIER CON								$886,731	$886,731
PROFIT OF PRIME CONTRACTOR (20%) (#5)						$13,213,223	$5,835,002		$19,934,956
SUBTOTAL				1,382,987		$79,279,338	$35,010,014	$18,621,354	$132,910,706
CONSTRUCTION MANAGEMENT FEE (24% OF TOTAL COSTS) (#						$19,027,041	$8,402,405	$4,469,125	$31,898,569
SUBTOTAL				1,382,987		$98,306,379	$43,412,417	$23,090,479	$164,809,275
FSAR (SAFETY REPORT),(1% OF LABOR & S/C COSTS BEFORE F				5,563			$350,100	$186,214	$536,314
EMISSIONS MODELING,(1/4% OF TOTAL COST BEFORE FEES)				3,323		$198,198	$87,525	$46,553	$332,276
PROJ.MGMT -WMCO- (8%OF COSTS EXCL. RUST FEE)						$6,342,347	$2,800,801	$1,489,708	$10,632,856
ENGINEERING (20% (TITLE 1 & 2) OF COST EXCL ALL FEES)				265,821		$15,855,868	$7,002,005	$3,724,271	$26,582,142
SUBTOTAL				1,657,494		$120,702,792	$53,652,846	$28,537,225	$202,892,863

FERNALD PROJECT

11/30/90

I.T.CORP.PROJ.# 303517

ESTIMATOR: F.H.OASLIGHTWALA

COSTS: OP. UNIT 1.- VITRIFICATION, ON-SITE,CAPITAL, ALT4B

PROJ.ENGR:DARRELL DROUHARD

TYPE OF ESTIMATE: -30% --+30%

FY 90 DOLLARS

DESCRIPTION	Qty.	Unit	MAT'L $/UNIT	TOTAL MAN-HRS	$/HR	$ MATERIAL	$ LABOR	1ST OR 2NDTIER OR EQUPT. RNTL	TOTAL COST
CARRY FORWARD				1,657,494		$120,702,792	$53,652,846	$28,537,225	$202,892,863
DECONTAMINATE & DISASSEMBLE SYSTEM				3,600			-	$360,000	$360,000
SUBTOTAL COSTS				1,661,094		$120,702,792	$53,652,846	$28,897,225	$203,252,863
CONTINGENCY 25%						$30,175,698	$13,413,211	$7,224,306	$50,813,216
TOTAL ESTIMATED COSTS				1,661,094		$150,878,490	$67,066,057	$36,121,531	$254,066,078
ESCALATION FOR THIS ALTERNATE,(26.2%X/13)				-		$39,530,164	$17,571,307	$9,463,841	$66,565,312
TOTAL ESTIMATED COSTS, (CAPITAL)				1,661,094		$190,408,654	$84,637,364	$45,585,372	$320,631,390

NOTES:
1).INCL.ALL CONSTRUCTION PERSONNEL SAFETY TRAINING PER OSHA REQMTS.
2).HEALTH PHYSICS FACTOR 20%PER RAY ROPPEL OF WMCO.
3).THIS IS FOR CERCLA & PERSONNEL PROTECTION REQUIREMENTS
4).2ND & 3RD TIER CONTRACTOR MARKUP TO PRIME 5%
5).PRIME CONTRACTOR'S MARKUP 20%. OF HIS MATERIAL & LABOR COSTS.
6).RUST MANAGEMENT FEE PER RAY ROPPEL OF WMCO.
7).ALL PROTECTIVE CLOTHING, RESPIRATORY EQPT. ETC MUST BE WORN.
8).NO FUNDING FOR CERCLA,PSAR, OR OTHER REGULATORY PROGRAMS INCLUDED.
9) WORK TO BE DONE BY A FIXED PRICE CONTRACTOR AND SUBCONTRACTORS.
10).WORK SCHEDULE IS FIRST SHIFT,ON A 4DAY/WEEK,10 HR./DAY(40 HR. BASIS)
11).DECON TRAILERS NOT PROVIDED. USE EXISTING SITE FACILITIES.
12).LONG TERM MONITORING COSTS NOT INCLUDED IN THIS OPTION.
13)ESCALATION ASSUMES MIDPOINT OF CONSTRUCTION AS FY 95-3.

DRAFT

SUMMARY OF COSTS

OP. UNIT #1. ALTERNATE 4A

REMOVAL, SLUDGE TREATMENT AND ON-SITE DISPOSAL

CAPITAL COSTS

ITEM	TOTAL COST
BATCH PLANT	$15,582,789
DRUM HANDLING	$3,558,371
SITE PREP.:-EAST OF OPERABLE UNIT 1.	$5,362,118
PIT DREDGING	$965,965
RAW MATERIAL TRANSFER STATION & R.R. TRACK	$710,414
SEGREGATION FACILITY	$14,059,585
SLUDGE & WATER TREATMENT PLANT.	$23,279,985
WASTE LAYDOWN - TRANSFER FACILITY.	$3,060,755
TOTAL CAPITAL COSTS	$68,579,982

SOME MAJOR CAPITAL COST ITEMS

ITEM	TOTAL COST*
STORAGE TANK FOR SLURRY	$1,606,304
ASH & CEMENTTRANSFER STATION	$3,529,853
FABRIC ARCH STRUCTURES	$10,093,491
PRE-ENGINEERED BUILDING	$1,198,509
MECHANICAL EXCAVATING & LIFTING EQUIPMENT	$6,103,661
REVERSE OSMOSIS	$2,163,411
TANK-800,000 GALLONS FOR TREATMENT FACILIT	$4,750,320
PIPE-6" DOUBLEWALL CARBON STEEL.	$1,255,276
OTHER ITEMS	$37,879,157
TOTAL COST	$68,579,982

*: TOTAL COSTS ARE DIRECT COSTS OF ITEM MULTIPLIED BY FACTOR TO COVER ALL ADD-ONS.

DRAFT

FERNALD PROJECT

I. T.PROJECT NO.:505117 OP.UNIT #1

BATCH PLANT -OFF SITE DISPOSAL - OPTION 5A

TYPE OF ESTIMATE:-30%-+50%

FY 91-1 DOLLARS

11/26/90

ESTIMATOR: F.H.GASLIGHTWALA

PROJ.ENGR:SCOTT McCOMB

PROJ. MGR.DAVID HARMER

DESCRIPTION	Qty.	Unit	MAT'L $/UNIT	MAN-HRS /UNIT	TOTAL MAN-HRS	$/HR	$ MATERIAL	$ LABOR	1ST OR 2ND TIER OR EQUP. RNTL	TOTAL COST
MOBILE UNIT 150 CU.YD. BATCH PLANT	1	EA	$135,000	120	120	$27.12	$135,000	$3,254		$138,254
EXTRA DUST CONTROL EQUIPMENT	1	EA	$13,000	32	32	$27.12	$13,000	$868		$13,868
HIGH ENERGY 150 CU. YD./HR. MIXER	1	EA	$150,000	60	60	$27.12	$150,000	$1,627		$151,627
STORAGE TANK FOR SLURRY,15,000 GALLONS.	2	EA	-	224	448	-	-		$400,000	$400,000
ELECTRICAL CONNECTIONS	1	LS	$5,000	60	60	$24.74	$5,000	$1,484		$6,484
WATER CONNECTIONS	1	LS	$2,000	60	60	$27.12	$2,000	$1,627		$3,627
FOUNDATIONS FOR SLURRY TANK (#12)	2	LS	$30,000	120	240	$24.41	$60,000	$5,858		$65,858
FOUNDATIONS FOR SILOS(#12)	2	LS	$20,000	80	160	$24.41	$40,000	$3,906		$43,906
ASH & CEMENT TRANSFER STATION w/ PIPING(SUBCONTRACT PRI	1	LS	-	-	480	-	-		$879,000	$879,000
FORKLIFT TRUCKS-9 TONS CAPACITY	4	EA	$70,000	32	128	$26.75	$280,000	$3,421		$283,421
CHILLER-129 TONS AIR COOLED	1	EA	$60,000	60	60	$26.75	$60,000	$1,604		$61,604
AIR HANDLER 51,600 C.F.M. w ELECTRIC HEAT 7,000,000 B.T.U	1	EA	$25,000	40	40	$27.12	$25,000	$1,085		$26,085
PUMPS CHILLED WATER 420 G.P.M. @ 50' HD.	2	EA	$2,500	32	64	$27.12	$5,000	$1,736		$6,736
PUMPS CONDENSING WATER 360 G.P.M. @ 40' HD.	2	EA	$2,500	32	64	$27.12	$5,000	$1,736		$6,736
PIPING-6" CHILLED WATER w/ INSULATION	400	FT.	$27.54	0.92	367	$27.12	$11,016	$9,953		$20,969
PIPING-6" CONDENSING WATER w/ INSULATION	300	FT.	$27.54	0.92	275	$27.12	$8,262	$7,458		$15,720
DUCTWORK	51,600	LBS	0.50	0.19	9,804	$23.46	$25,800	$230,002		$255,802
INSULATION FOR THIS DUCTWORK	40,000	SFT	1.25	0.11	4,240	$27.63	$50,000	$117,151		$167,151
ADDITIONAL FANS TO MAKE-UP VENTILATION, 75,000 C.F.M.	4	EA	$10,000	48	192	$23.46	$40,000	$4,504		$44,504
CONTROLS FOR ABOVE SYSTEM	1	LS	$15,000	60	60	$24.74	$15,000	$1,484		$16,484
MISCELANEOUS DAMPERS, LOUVERS	1	LS	$7,000	60	60	$23.46	$7,000	$1,408		$8,408
TRANSFER FACILITY AT BATCH PLANT	1	LS		-	-	-	-	-		-
FABRIC ARCH STRUCTURE,50'WIDTH X 50FT.LGTH.X24'HT.	1	EA	$40,000	96	96	$24.41	$40,000	$2,343		$42,343
FREIGHT COSTS FOR 50'W X50' L X24' H	1	EA	$603			$24.41	$603			$603
SCAFFOLDING FOR THIS STRUCTURE	1	LS	$200	16	16	$24.41	$200	$391		$591
SUPERVISOR FOR THIS STRUCTURE	1	LS	-	16	16	-			$1,000	$1,000
SLIDING DOOR, 14'X9'-6" FOR THIS STRUCTURE	2	EA	INCL.	16	32	$24.41		$781		$781
REINFORCED CONCRETE SLAB	62	CY	$50	0.492	31	$24.41	$3,100	$757		$3,857
SODIUM VAPOR LAMP, 400 WATTS, HIGH PRESSURE, 3 PHASE	2	EA	$3,380	28	56	$24.74	$10,760	$1,385		$12,145
ELECTRICAL WIRING, CONDUIT FOR THIS LIGHTS (SUBCONTR.)	1	LS	-	140	140	-			$5,000	$5,000
GROUT PLANT:	1	LS		-	-	-	-	-	-	-
FREIGHT COSTS FOR 120'W X100' L X58' H	1	EA	$2,897			-	$2,897			$2,897
FABRIC ARCH STRUCTURE,120'WIDTH X 100FT.LGTH.X58'HT.	1	EA	$225,000	160	160	$24.41	$225,000	$3,906		$228,906
SCAFFOLDING FOR THIS STRUCTURE	1	LS	$200	16	16	$24.41	$200	$391		$591
SUPERVISOR FOR THIS STRUCTURE	1	LS	-	16	16	-			$1,000	$1,000
PERSONNEL & EQUPT. SERVICE ENTRANCE, 20'X20'X20'w/8'-4"HT	1	EA	INCL.	32	32	$24.41		$781		$781
WIDTH SINGLE SLIDE DOOR.	-	-	-	-	-	-	-	-	-	-
REINFORCED CONCRETE SLAB	296	CY	$50	0.492	146	$24.41	$14,800	$3,564		$18,364
SODIUM VAPOR LAMP, 400 WATTS, HIGH PRESSURE, 3 PHASE	7	EA	$5,380	28	196	$24.74	$37,660	$4,849		$42,509
ELECTRICAL WIRING, CONDUIT FOR THIS LIGHTS (SUBCONTR.)	1	LS	-	490	490	-			$17,500	$17,500
SUMPS-9'X4' w/LINER, HIGH DENSITY POLYETHYLENE	6	EA	$2,700	32	192	$27.12	$16,200	$5,207		$21,407
REINFORCED CONC. FOOTINGS, 30.25 SQ. FT.-12" THICK	1.120	CY	$200	0.400	0.448	$24.41	$224	$206		$430
SLIDING DOOR, 14' X9'-6: FOR STRUCTURE	1	EA	INCL.	16	16	$24.41		$391		$391
SUB-TOTAL					18,673		$1,288,722	$425,118	$1,303,500	$3,017,340

FERNALD PROJECT

11/26/90

I. T.PROJECT NO.:303317 OP.UNIT #1

ESTIMATOR: F.H.GASLIGHTWALA

BATCH PLANT -OFF SITE DISPOSAL - OPTION 5A

PROJ.ENGR:SCOTT McCOMB

TYPE OF ESTIMATE:-30%→50%

PROJ. MGR.DAVID HARMER

FY 91-1 DOLLARS

DESCRIPTION	Qty.	Unit	MAT'L $/UNIT	MAN-HRS /UNIT	TOTAL MAN-HRS	$/HR	$ MATERIAL	$ LABOR	1ST OR 2ND TIER OR EQUP. RNTL	TOTAL COST
CARRYOVER FROM PREVIOUS PAGE					18,675		$1,288,722	$425,118	$1,303,500	$3,017,340
RAW MATERIALS STORAGE FACILITY:	1	LS		-	-		-	-	-	-
PRE-ENGINEERED BLDG.70'X70'X30'EAVES HT.w/BUTLERRIB, DOU	1	EA	-	-	60				$118,000	$118,000
SLIDE DOOR14'-4"X18' & BUTLERRIB II WALL PANELS, 26GA. &	-	-	INCL.	-	-		-	-	-	-
BUTLERRIB II ROOF SYSTEM-26 GA.	-	-	INCL.	-	-		-	-	-	-
REINFORCED CONCRETE SLAB	121	CY	$50	0.492	60	$24.41	$6,050	$1,465	-	$7,515
SODIUM VAPOR LAMP, 400 WATTS, HIGH PRESSURE, 3 PHASE	3	EA	$5,380	28	84	$24.74	$16,140	$2,078		$18,218
ELECTRICAL WIRING, CONDUIT FOR THIS LIGHTS	1	LS	-	210	210	-			$7,500	$7,500
MISCELLANEOUS ITEMS:	1	LS		-	-		-	-	-	-
REINFORCED CONCRETE APRON (OUTSIDE TRANSFER FACILITY)	49	CY	$50	0.327	16	$24.41	$2,444	$391	-	$2,835
REINFORCED CONCRETE APRON (OUTSIDE RAW MATERIAL)	34	CY	$50	0.327	12	$24.41	$1,711	$293	-	$2,004
SUBTOTAL THIS PAGE	1	LS			19,115		$1,313,067	$429,345	$1,429,000	$3,175,412
PRODUCTIVITY FACTOR(17% ADD TO MANHOURS & DOLLARS) (F					3,250	$27.12		$88,140	$242,930	$331,070
RENTAL EQUIPMENT MANHOURS					3,001	$26.73		$80,217	$120,040	$200,257
TOTAL	1	LS			25,366		$1,313,067	$597,702	$1,791,970	$3,704,739

DRAFT

FERNALD PROJECT

11/26/90

I. T.PROJECT NO.:303317 OP.UNIT #1

ESTIMATOR: F.H.GASLIGHTWALA

BATCH PLANT -OFF SITE DISPOSAL - OPTION 5A

PROJ.ENGR:SCOTT McCOMB

TYPE OF ESTIMATE:-30%→50%

PROJ. MGR.DAVID HARMER

FY 91-1 DOLLARS

DESCRIPTION	Qty.	Unit	MAT'L $/UNIT	MAN-HRS /UNIT	TOTAL MAN-HRS	$/HR	$ MATERIAL	$ LABOR	1ST OR 2ND TIER OR EQUP. RNTL	TOTAL COST
CARRYOVER FROM PREVIOUS PAGE					25,366		$1,315,067	$597,702	$1,791,970	$3,704,739
SMALL TOOLS (3% OF TOTAL COSTS)	1	LS			-				$111,142	$111,142
CLEAN UP LABOR (5% OF TOTAL COSTS)	1	LS			5,057				$111,142	$111,142
TEMP. SERV. & FAC. (5% OF TOTAL COSTS)	1	LS							$185,237	$185,237
FIELD STAFF (4% OF TOTAL COSTS)	1	LS			7,799				$148,190	$148,190
SCAFFOLDING (2% OF TOTAL COSTS)	1	LS			2,978				$74,095	$74,095
SUBTOTAL PROJECT COSTS					41,200		$1,315,067	$597,702	$2,421,776	$4,334,545
HEALTH PHYSICS (20% OF LABOR & S/C COSTS) (#2)					12,078			$119,540	$484,355	$603,896
SALES TAX (5.5% OF MATERIAL COSTS)							$72,329	-	-	$72,329
SUBTOTAL					53,278		$1,387,396	$717,242	$2,906,131	$5,010,770
CERCLA REQMTS & PERSONNEL PROTECTION(12% OF TOTAL COS					5,797		$166,488	$86,069	$348,736	$601,293
BOND(3%)							$41,622	$21,517	$87,184	$150,323
SUBTOTAL					59,076		$1,595,506	$824,828	$3,342,051	$5,762,386
MARKUP BY GENERAL CONTRACTOR ON 2ND & 3RD TIER CONTR.									$167,103	$167,103
PROFIT OF PRIME CONTRACTOR (20%) (#5)							$319,101	$164,966	-	$484,067
SUBTOTAL					59,076		$1,914,607	$989,794	$3,509,154	$6,413,556
CONSTRUCTION MANAGEMENT FEE (24% OF TOTAL COSTS) (#6)							$459,506	$237,551	$842,197	$1,539,254
SUBTOTAL					59,076		$2,374,113	$1,227,345	$4,351,351	$7,952,810
FSAR (SAFETY REPORT),(3% OF LABOR & S/C COSTS BEFORE FEES)					1,530			$29,694	$105,275	$134,969
EMISSIONS MODELING,(3% OF TOTAL COST BEFORE FEES)					1,924		$57,438	$29,694	$105,275	$192,407
PROJ.MGMT -WMCO- (8%OF COSTS EXCL. RUST FEE)							$133,169	$79,184	$280,732	$513,085
ENGINEERING (20% (TITLE 1 & 2) OF COST EXCL ALL FEES)					12,827		$382,921	$197,959	$701,831	$1,282,711
SUBTOTAL					75,177		$2,967,641	$1,563,876	$5,544,464	$10,075,982

DRAFT

FERNALD PROJECT

11/26/90

I. T.PROJECT NO.:903317 OP.UNIT #1

ESTIMATOR: F.H.GASLIGHTWALA

BATCH PLANT -OFF SITE DISPOSAL - OPTION 5A

PROJ.ENGR:SCOTT McCOMB

TYPE OF ESTIMATE:-30%→50%

PROJ. MGR.DAVID HARMER

FY 91-1 DOLLARS

DESCRIPTION	Qty.	Unit	MAT'L $/UNIT	MAN-HRS /UNIT	TOTAL MAN-HRS	RATE	$ MATERIAL	$ LABOR	1ST OR 2ND TIER EQUP. RNTL	TOTAL COST
CARRY FORWARD					75,177		$2,967,641	$1,563,876	$5,544,464	$10,075,982
DECONTAMINATE & DISASSEMBLE SYSTEM					1,600		-	-	$160,000	$160,000
SUBTOTAL COSTS					76,777	-	$2,967,641	$1,563,876	$5,704,464	$10,235,982
CONTINGENCY 25%						-	$741,910	$390,969	$1,426,116	$2,558,995
TOTAL ESTIMATED COSTS					76,777	-	$3,709,551	$1,954,846	$7,130,580	$12,794,977
ESCALATION FOR THIS ALTERNATE,(16.5%)(/13)					-	-	$612,076	$322,550	$1,176,546	$2,111,172
TOTAL ESTIMATED COSTS. (CAPITAL)					76,777	-	$4,321,627	$2,277,396	$8,307,126	$14,906,149

NOTES:
1).INCL.ALL CONSTRUCTION PERSONNEL SAFETY TRAINING PER OSHA REQMTS.
2).HEALTH PHYSICS FACTOR 20%PER RAY ROPPEL OF WMCO.
3).THIS IS FOR CERCLA & PERSONNEL PROTECTION REQUIREMENTS
4).2ND & 3RD TIER CONTRACTOR MARKUP TO PRIME 5%
5).PRIME CONTRACTOR'S MARKUP 20%. OF HIS MATERIAL & LABOR COSTS.
6).RUST MANAGEMENT FEE PER RAY ROPPEL OF WMCO.
7).ALL PROTECTIVE CLOTHING, RESPIRATORY EQPT. ETC MUST BE WORN.
8).NO FUNDING FOR CERCLA,FSAR, OR OTHER REGULATORY PROGRAMS INCLUDED.
9) WORK TO BE DONE BY A FIXED PRICE CONTRACTOR AND SUBCONTRACTORS.
10).WORK SCHEDULE IS FIRST SHIFT,ON A 4DAY/WEEK,10 HR./DAY(40 HR. BASIS)
11).DECON TRAILERS NOT PROVIDED. USE EXISTING SITE FACILITIES.
12).LONG TERM MONITORING COSTS NOT INCLUDED IN THIS OPTION.
13)ESCALATION ASSUMES MIDPOINT OF CONSTRUCTION AS FY 92-3.

DRAFT

FERNALD PROJECT 11/26/90

I. T. PROJECT #303317-OP. UNIT #1 ESTIMATOR: F.H.GASLIGHTWALA

COSTS-SLUDGE & WATER TREATMENT ALTERNATIVE-A-OPTION 4A, 5A PROJ.ENGR:SUSAN RHYNE

TYPE OF ESTIMATE:-30%-+50%

FY 91-1 DOLLARS

DESCRIPTION	Qty.	Unit	MAT'L $/UNIT	MAN-HRS /UNIT	TOTAL MAN-HRS	$/HR	$ MATERIAL	$ LABOR	1st or 2ND TIER OR EQUP. RNTL.	TOTAL COST
THICKENER, (TH-1), 60 FT. DIA., (SUBCONTRACT PRICE)	1	EA		320	320				$235,000	$235,000
CLARIFIER, (CL-1), 60 FT. DIA., (SUBCONTRACT PRICE)	1	EA		1,360	1,360				$140,000	$140,000
MULTIMEDIA FILTER, (F-1), 12 FT.	1	EA	$90,000	48	48	$27.12	$90,000	$1,302		$91,302
REVERSE OSMOSIS, (R01A, B), 125 G.P.M.	2	EA	$270,000	120	240	$27.12	$540,000	$6,509		$546,509
ION EXCHANGE(IE-1A, B), 100GPM, (1 SET OF CATION BEDS,	2	EA	$150,000	160	320	$27.12	$300,000	$8,678		$308,678
1 SET OF ANION BEDS)	1	EA	-	-	-	-	-	-	-	-
LIFT STATION:200 G.P.M.DUPLEX PUMPS, 20' LIFT INCL. AL	1	EA	$21,000	80	80	$27.12	$21,000	$2,170		$23,170
VACCUM TRAILER, 30 CU. YDS.	1	EA	$130,000	40	40	$27.12	$130,000	$1,085		$131,085
VACCUM TRUCKS, 16 CU. YD., AUXILIARY ENGINE	1	EA	$139,000	40	40	$27.12	$139,000	$1,085		$140,085
THICKNER, w/ UNDERFLOW PUMP, (P01), 200 G.P.M. 30% SO	1	EA	$42,000	160	160	$27.12	$42,000	$4,339		$46,339
30 P.S.I. PRESSURE	-	-	-	-	-	-	-	-	-	-
FRONT END LOADER, MODEL 916, 1.71 CU.YD. CAPACITY.	1	EA	$74,000	16	16	$26.73	$74,000	$428		$74,428
FEED PUMPS(P02-P07B)	-	-	-	-	-	-	-	-	-	-
P-02, P03THRU P07 A,B	7	EA	$2,234	32	224	$27.12	$15,638	$6,075		$21,713
P03, P04	2	EA	$2,717	32	64	$27.12	$5,434	$1,736		$7,170
DOUBLE WALL PIPE -6" C.S.	450	FT	$28	0.774	348	$27.12	$12,600	$9,438		$22,038
TANK,800,000 GALS.,80 FT.DIA.X 30 FT. HIGH,SLAB BOTTOM	2	EA	-	640	1,280	-	-	-	$1,200,000	$1,200,000
DOME TOP,4 MANHOLES,1 INLET,2 OUTLET, NON ASME	-	-	-	-	-	-	-	-	-	-
TANK, 700,000 GALS, 80 FT.DIA.X 25 FT. HIGH, SLAB BOTTO	1	EA	-	560	560	-	-	-	$500,000	$500,000
DOME TOP, NON ASME, VERTICAL, 4 MANHOLES,1 INLET,2	-	-	-	-	-	-	-	-	-	-
HEAT TRACING	400	FT	$8	0.8	320	$24.74	$3,200	$7,917	-	$11,117
PIPING CARBON STEEL-4" SCH.40	800	FT	$11.29	0.444	355	$27.12	$9,032	$9,628	-	$18,660
WWTP HEATING SYSTEM:	-	-	-	-	-	-	-	-	-	-
ELECTRIC HEATING SYSTEM-772 KW*	1	EA	$44,800	160	160	$24.74	$44,800	$3,958	-	$48,758
WWTP VENTILATION SYSTEM:	-	-	-	-	-	-	-	-		-
6,300 C.F.M. SYSTEM	2	EA	-	180	-	-	-	-	$75,600	$75,600
TANK FILTER/VENTILATION, 70 C.F.M.	2	EA	-	4	-	-	-	-	$840	$840
FABRIC ARCH STRUCTURE, 120' W X 260'L X58'H	1	EA	$583,600	1477	1,477	$24.41	$583,600	$36,054	-	$619,654
CRANE OPERATOR FOR FABRIC ARCH STRUCTURE	1	LS	-	185	185	$24.41	-	$4,516	$2,200	$6,716
SCAFFOLDING FOR FABRIC ARCH STRUCTURE	1	LS	-	148	148	$24.41	-	$3,613	$3,000	$6,613
SUPERVISOR FOR FABRIC ARCH STRUCTURE	1	LS	-	-	0	-	-	$0	$7,200	$7,200
FREIGHT COST FOR FABRIC ARCH STRUCTURE	1	LS	-	-	-	-	-	-	$9,000	$9,000
REINFORCED CONCRETE SLAB, 31,200 SQ. FT. 9" THICK	867	CYDS	$30	0.492	427	$24.41	$45,350	$10,423	-	$55,773
SUMPS,9' X4' WITH LINER, HIGH DENSITY POLYETHYLENE	14	EA	$3,700	32	448	$24.41	$37,800	$10,936	-	$48,736
REINFORCED CONCRETE PADS, 82' DIA. X9" THICK	441	CYDS	$30	0.492	217	$24.41	$22,050	$5,297	-	$27,347
400 WATT HIGH PRESSURE SODIUM VAPOR LIGHTS, 3 PHASE	18	EA	$3,580	28	504	$24.74	$96,840	$12,469	-	$109,309
WIRING CONDUIT FOR ABOVE LIGHTS	1	LS	-	1260	1,260	-	-	$0	$45,000	$45,000
END SLIDING DOOR 14' HEIGHT X9'-6" WIDTH	2	EA	$6,000	16	32	$24.41	$12,000	$781		$12,781
REINFORCED CONCRETE w/ONE LAYER 6 X6, 10/10 WELD WI	27	CYDS	$50	0.492	15	$24.41	$1,350	$317	-	$1,667
VALVE PIT 2185 SQ FT, 4" THICK w/WATERPROOFING	-	-	-	-	-	-	-	-	-	-
EARTHERN BERM FOR UNTREATED WATER TANKS	617	CYDS	-	0.582	359	-	-		$16,716	$16,716
CLAY, 95% COMPACTION, 6'-6" LIFTS, 10 MILE HAUL DISTA	-	-	-	-	-	-	-	-	-	-
SUBTOTAL THIS PAGE	1	LS			11,005		$2,223,694	$148,754	$2,234,556	$4,607,004

FERNALD PROJECT 11/26/90

I. T. PROJECT #903317-OP. UNIT #1 ESTIMATOR: F.H.GASLIGHTWALA

COSTS-SLUDGE & WATER TREATMENT ALTERNATIVE-A-OPTION 4A, 5A PROJ.ENGR:SUSAN RHYNE

TYPE OF ESTIMATE:-30%--+50%

FY 91-1 DOLLARS

DESCRIPTION	Qty.	Unit	MAT'L $/UNIT	MAN-HRS /UNIT	TOTAL MAN-HRS	$/HR	$ MATERIAL	$ LABOR	1st or 2ND TIER OR EQUP. RNTL.	TOTAL COST
CARRYFORWARD FROM PREVIOUS PAGE	1	LS			11,005		$2,225,694	$148,754	$2,234,556	$4,607,004
6" DIAMETER, DOUBLE WALL CARBON STEEL PIPE BURIED,	6,500	FT	$28	0.774	5,031	$27.12	$182,000	$136,441	-	$318,441
BELOW SOIL SURFACE	-	-	-	-	-	-	-	-	-	-
4" DIAMETER, DOUBLE WALL CARBON STEEL PIPE BURIED,	800	FT	$11.29	0.444	355	$27.12	$9,052	$9,628	-	$18,660
BELOW SOIL SURFACE	-	-	-	-	-	-	-	-	-	-
GRAVEL LOT w/6" CRUSHED STONE (1" MAX. GRADE)	866	CYDS	-	0.056	48		-		$12,340	$12,340
HDPE LINING, 80 MIL FOR UNTREATED WATER TANKS.	29,100	CYDS	-	-	-	-	$16,800	$43,650	-	$60,450
SUBTOTAL THIS PAGE	1	LS			16,459		$2,431,526	$338,475	$2,246,896	$5,016,895
PRODUCTIVITY FACTOR(17% ADD TO MANHOURS & DOLLA	1	LS			2,795	$27.12	-	$75,800	$381,972	$457,772
EQUIPMENT MANHOURS	1	LS			1,644	$26.75	-	$43,944	$82,200	$126,144
TOTAL MECHANICAL WORK	1	LS			20,878		$2,431,526	$458,217	$2,711,068	$5,600,811
TOTAL ELECTRICAL WORK (5% OF TOTAL MECHANICAL)	1	LS			6,395		$121,576	$22,911	$135,555	$280,040
TOTAL	1	LS			27,273		$2,553,102	$481,128	$2,846,621	$5,880,851

DRAFT

FERNALD PROJECT

11/26/90

I. T. PROJECT #505317-OP. UNIT #1

ESTIMATOR: F.H.GASLIGHTWALA

COSTS-SLUDGE & WATER TREATMENT ALTERNATIVE-A-OPTION 4A,5A

PROJ.ENGR:SUSAN RHYNE

TYPE OF ESTIMATE:-30%-+50%

FY 91-1 DOLLARS

DESCRIPTION	Qty.	Unit	MAT'L $/UNIT	MAN-HRS /UNIT	TOTAL MAN-HRS	$/HR	$ MATERIAL	$ LABOR	1st or 2ND TIER OR EQUP. RNTL.	TOTAL COST
CARRYOVER FROM PREVIOUS PAGE					27,275		$2,555,102	$481,128	$2,846,621	$5,880,851
SMALL TOOLS (3% OF TOTAL COSTS)	1	LS			-				$176,426	$176,426
CLEAN UP LABOR (3% OF TOTAL COSTS)	1	LS			8,027				$176,426	$176,426
TEMP. SERV. & FAC. (5% OF TOTAL COSTS)	1	LS							$294,043	$294,043
FIELD STAFF (4% OF TOTAL COSTS)	1	LS			12,581				$235,234	$235,234
SCAFFOLDING (2% OF TOTAL COSTS)	1	LS			4,727				$117,617	$117,617
SUBTOTAL PROJECT COSTS					52,408		$2,555,102	$481,128	$3,846,367	$6,880,597
HEALTH PHYSICS (20% OF LABOR & S/C COSTS) (#2)					17,310			$96,226	$769,273	$865,499
SALES TAX (5.5% OF MATERIAL COSTS)							$140,421	-	-	$140,421
SUBTOTAL					69,718		$2,695,523	$577,354	$4,615,640	$7,886,517
CERCLA REQMTS & PERSONNEL PROTECTION(12% OF TOTA					8,309		$323,223	$69,282	$553,877	$946,382
BOND(3%)							$80,806	$17,321	$138,469	$236,596
SUBTOTAL					78,027		$3,097,552	$663,957	$5,307,986	$9,069,495
MARKUP BY GENERAL CONTRACTOR ON 2ND & 3RD TIER C									$265,399	$265,399
PROFIT OF PRIME CONTRACTOR (20%) (#5)							$619,510	$132,791	-	$752,301
SUBTOTAL					78,027		$3,717,062	$796,748	$5,573,385	$10,087,195
CONSTRUCTION MANAGEMENT FEE (24% OF TOTAL COSTS)							$892,095	$191,219	$1,337,612	$2,420,926
SUBTOTAL					78,027		$4,609,157	$987,967	$6,910,997	$12,508,121
FSAR (SAFETY REPORT),(3% OF LABOR & S/C COSTS BEFORE					1,911			$23,902	$167,202	$191,104
EMISSIONS MODELING,(3% OF TOTAL COST BEFORE FEES)					3,026		$111,512	$23,902	$167,202	$302,616
PROJ.MGMT -WMCO- (8%OF COSTS EXCL. RUST FEE)							$297,363	$63,740	$445,871	$806,976
ENGINEERING (20% (TITLE 1 & 2) OF COST EXCL ALL FEES)					20,174		$743,412	$159,350	$1,114,677	$2,017,439
SUBTOTAL					103,138		$5,761,446	$1,258,861	$8,805,949	$15,826,256

FERNALD PROJECT

11/26/90

I. T. PROJECT #503517-OP. UNIT #1

ESTIMATOR: F.H.GASLIGHTWALA

COSTS-SLUDGE & WATER TREATMENT ALTERNATIVE-A-OPTION 4A,5A

PROJ.ENGR:SUSAN RHYNE

TYPE OF ESTIMATE:-30%→+50%

FY 91-1 DOLLARS

DESCRIPTION	Qty.	Unit	MAT'L $/UNIT	MAN-HRS /UNIT	TOTAL MAN-HRS	RATE	$ MATERIAL	$ LABOR	1ST OR 2ND TIERO EQUP. RNTL	TOTAL COST
CARRY FORWARD					103,138		$5,761,446	$1,258,861	$8,805,949	$15,826,256
DECONTAMINATE & DISASSEMBLE SYSTEM					1,600		-	-	$160,000	$160,000
SUBTOTAL COSTS					104,738	-	$5,761,446	$1,258,861	$8,965,949	$15,986,256
CONTINGENCY 25%						-	$1,440,362	$314,715	$2,241,487	$3,996,564
TOTAL ESTIMATED COSTS					104,738	-	$7,201,808	$1,573,576	$11,207,437	$19,982,820
ESCALATION FOR THIS ALTERNATE.(16.5%X/13)					-	-	$1,188,298	$259,640	$1,849,227	$3,297,165
TOTAL ESTIMATED COSTS, (CAPITAL)					104,738	-	$8,390,106	$1,833,216	$13,056,664	$23,279,985

NOTES:
1).INCL.ALL CONSTRUCTION PERSONNEL SAFETY TRAINING PER OSHA REQMTS.
2).HEALTH PHYSICS FACTOR 20%PER RAY ROPPEL OF WMCO.
3).THIS IS FOR CERCLA & PERSONNEL PROTECTION REQUIREMENTS
4).2ND & 3RD TIER CONTRACTOR MARKUP TO PRIME 5%
5).PRIME CONTRACTOR'S MARKUP 20%. OF HIS MATERIAL & LABOR COSTS.
6).RUST MANAGEMENT FEE PER RAY ROPPEL OF WMCO.
7).ALL PROTECTIVE CLOTHING, RESPIRATORY EQPT. ETC MUST BE WORN.
8).NO FUNDING FOR CERCLA,FSAR, OR OTHER REGULATORY PROGRAMS INCLUDED.
9) WORK TO BE DONE BY A FIXED PRICE CONTRACTOR AND SUBCONTRACTORS.
10).WORK SCHEDULE IS FIRST SHIFT,ON A 4DAY/WEEK,10 HR./DAY(40 HR. BASIS)
11).DECON TRAILERS NOT PROVIDED. USE EXISTING SITE FACILITIES.
12).LONG TERM MONITORING COSTS NOT INCLUDED IN THIS OPTION.
13)ESCALATION ASSUMES MIDPOINT OF CONSTRUCTION AS FY 94-1.

DRAFT

FERNALD PROJECT — 11/30/90

I.T.CORP.PROJ.# 303317 — ESTIMATOR: F.H.GASLIGHTWALA

COSTS: OP. UNIT 1.- VITRIFICATION, OFF-SITE, CAPITAL, ALT5B — PROJ.ENGR:DARRELL DROUHARD

TYPE OF ESTIMATE: -30%-+50%

FY 91-1 DOLLARS

DESCRIPTION	Qty.	Unit	MAT'L $/UNIT	TOTAL MAN-HRS	$/HR	$ MATERIAL	$ LABOR	1ST OR 2NDTIER OR EQUPT. RNT	TOTAL COST
VITRIFICATION EQUIPMENT	-	-							-
FEED HOPPER	1	EA.	$340,000	2,400	$26.75	$340,000	$64,152		$404,152
CONVEYORS-75' TO 400' RANGE IN LENGTH	5	EA.	INCL	INCL	$26.75	-	-		-
DUST ABATEMENT UNIT	1	EA.	$1,125,000	8,552	$26.75	$1,125,000	$225,000		$1,350,000
MULTI HOPPERS & ROTARY FEED VALVES	1	LS	$375,000	2,851	$26.75	$375,000	$75,000		$450,000
MELTERS	1	LS	$33,750,000	256,556	$26.75	$33,750,000	$6,857,742		$40,607,742
OFF-GAS TREATMENT	1	LS	$2,625,000	19,954	$26.75	$2,625,000	$525,000		$3,150,000
QUENCHER, FRIT CONVEYOR & FRIT BIN	1	EA.	$750,000	5,701	$26.75	$750,000	$150,000		$900,000
SUBTOTAL OF VITRIFICATION COSTS	1	LS	-	296,014		$38,965,000	$7,896,894	-	$46,861,894
INSTRUMENTATION & CONTROL(15% OF VITRIFICATION MAT.	1	LS	$4,000,000	72,639	$24.74	$4,000,000	$1,797,089		$5,797,089
PROCESS PIPING(12% OF VITRIFICATION MATERIAL COSTS)	1	LS	$3,100,000	38,139	$27.12	$3,100,000	$1,576,750		$4,676,750
ELECTRICAL WORK(20% OF VITRIFICATION MATERIAL COSTS	1	LS	$5,200,000	104,923	$24.74	$5,200,000	$2,595,795		$7,795,795
LICENSING(2% OF VITRIFICATION MATERIAL COSTS)	1	LS	-	5,195	-	-	$779,300		$779,300
AUXILIARIES (20% OF VITRIFICATION MATERIAL COSTS)	1	LS	$5,200,000	104,923	$24.74	$5,200,000	$2,595,795		$7,795,795
SUBTOTAL OF POWER & INSTRUMENTATION COSTS	1	LS	-	345,819		$17,500,000	$9,344,709	-	$26,844,709
ON-SITE SUBSTATION	1	LS	$1,400,250	6,667	$30.00	$1,400,250	$200,000		$1,600,250
MODIFICATION OF WILEY STATION	1	LS	$1,750,000	8,333	$30.00	$1,750,000	$249,990		$1,999,990
POWER LINE	1	LS	$328,125	1,562	$30.00	$328,125	$46,860		$374,985
FORKLIFT-7.5 TONS CAPACITY	4	EA.	$70,000	128	$26.75	$280,000	$3,421		$283,421
SUBTOTAL OF MODIFICATION & MISCELLANEOUS COSTS	1	LS	-	16,690		$3,758,375	$500,271	-	$4,258,646
SUBTOTAL THIS PAGE	1	LS	-	658,523		$60,223,375	$17,741,874	-	$77,965,249
PRODUCTIVITY FACTOR(17% ADD TO MANHOURS & S/C DOLL		LS		111,949	$26.75		$2,992,397	-	$2,992,397
EQUIPMENT RENTAL HOURS	1	LS		98,778	$26.75		$2,640,336	-	$2,640,336
SUBTOTAL				869,250		$60,223,375	$23,374,607	-	$83,597,982

DRAFT

FERNALD PROJECT

11/30/90

I.T.CORP.PROJ.# 303317

ESTIMATOR: F.H.GASLIGHTWALA

COSTS: OP. UNIT 1.- VITRIFICATION, OFF-SITE, CAPITAL, ALT5B

PROJ.ENGR:DARRELL DROUHARD

TYPE OF ESTIMATE:-30%-+30%

FY 91-1 DOLLARS

DESCRIPTION	Qty.	Unit	MAT'L $/UNIT	TOTAL MAN-HRS	$/HR	$ MATERIAL	$ LABOR	1ST OR 2ND TIER OR EQUPT. RNT	TOTAL COST
CARRYOVER FROM PREVIOUS PAGE				869,250		$60,223,375	$23,374,607	-	$83,597,982
INDIRECTS:	1	LS							
SMALL TOOLS (3% OF TOTAL COSTS)	1	LS			-			$2,507,959	$2,507,959
CLEAN UP LABOR (3% OF TOTAL COSTS)	1	LS		114,101				$2,507,959	$2,507,959
TEMP. SERV. & FAC. (5% OF TOTAL COSTS)	1	LS						$4,179,899	$4,179,899
FIELD STAFF (4% OF TOTAL COSTS)	1	LS		175,996				$3,343,919	$3,343,919
SCAFFOLDING (2% OF TOTAL COSTS)	1	LS		67,201				$1,671,960	$1,671,960
SUBTOTAL PROJECT COSTS				1,226,548		$60,223,375	$23,374,607	$14,211,656	$97,809,638
HEALTH PHYSICS (20% OF LABOR & S/C COSTS) (#2)				150,345			$4,674,921	$2,842,331	$7,517,253
SALES TAX (5.5% OF MATERIAL COSTS)						$3,312,286		-	$3,312,286
SUBTOTAL				1,376,893		$63,535,661	$28,049,528	$17,053,987	$108,639,177
CERCLA REQMTS & PERSONNEL PROTECTION(1% OF TOTAL C				6,014		$635,357	$280,495	$170,540	$1,086,392
BOND(3%)						$1,906,070	$841,486	$511,620	$3,259,176
SUBTOTAL				1,382,907		$66,077,088	$29,171,509	$17,736,147	$112,984,745
MARKUP BY GENERAL CONTRACTOR ON 2ND & 3RD TIER CON								$886,807	$886,807
PROFIT OF PRIME CONTRACTOR (20%) (#5)						$13,215,418	$5,834,302		$19,936,527
SUBTOTAL				1,382,907		$79,292,506	$35,005,811	$18,622,954	$132,921,272
CONSTRUCTION MANAGEMENT FEE (24% OF TOTAL COSTS) (#						$19,030,201	$8,401,395	$4,469,509	$31,901,105
SUBTOTAL				1,382,907		$98,322,707	$43,407,206	$23,092,463	$164,822,377
FSAR (SAFETY REPORT),(1% OF LABOR & S/C COSTS BEFORE F				5,363			$350,058	$186,230	$536,288
EMISSIONS MODELING,(1/4% OF TOTAL COST BEFORE FEES)				5,323		$198,231	$87,515	$46,557	$332,303
PROJ.MGMT -WMCO- (8% OF COSTS EXCL. RUST FEE)						$6,343,400	$2,800,465	$1,489,836	$10,633,701
ENGINEERING (20% (TITLE 1 & 2) OF COST EXCL ALL FEES)				265,843		$15,858,501	$7,001,162	$3,724,591	$26,584,254
SUBTOTAL				1,657,435		$120,722,839	$53,646,406	$28,539,677	$202,908,923

DRAFT

FERNALD PROJECT

11/30/90

I.T.CORP.PROJ.# 303317

ESTIMATOR: F.H.GASLIGHTWALA

COSTS: OP. UNIT 1.- VITRIFICATION, OFF-SITE, CAPITAL, ALT5B

PROJ.ENGR:DARRELL DROUHARD

TYPE OF ESTIMATE:-30%-+50%

FY 91-1 DOLLARS

DESCRIPTION	Qty.	Unit	MAT'L $/UNIT	TOTAL MAN-HRS	$/HR	$ MATERIAL	$ LABOR	1ST OR 2NDTIER OR EQUPT. RNT	TOTAL COST
CARRY FORWARD				1,657,435		$120,722,839	$53,646,406	$28,539,677	$202,908,923
DECONTAMINATE & DISASSEMBLE SYSTEM				3,600			-	$360,000	$360,000
SUBTOTAL COSTS				1,661,035		$120,722,839	$53,646,406	$28,899,677	$203,268,923
CONTINGENCY 25%						$30,180,710	$13,411,602	$7,224,919	$50,817,231
TOTAL ESTIMATED COSTS				1,661,035		$150,903,549	$67,058,008	$36,124,597	$254,086,153
ESCALATION FOR THIS ALTERNATE,(26.2%)(/13)				-		$39,536,730	$17,569,198	$9,464,644	$66,570,572
TOTAL ESTIMATED COSTS, (CAPITAL)				1,661,035		$190,440,279	$84,627,206	$45,589,241	$320,656,725

NOTES:
1).INCL.ALL CONSTRUCTION PERSONNEL SAFETY TRAINING PER OSHA REQMTS.
2).HEALTH PHYSICS FACTOR 20%PER RAY ROPPEL OF WMCO.
3).THIS IS FOR CERCLA & PERSONNEL PROTECTION REQUIREMENTS
4).2ND & 3RD TIER CONTRACTOR MARKUP TO PRIME 5%
5).PRIME CONTRACTOR'S MARKUP 20%. OF HIS MATERIAL & LABOR COSTS.
6).RUST MANAGEMENT FEE PER RAY ROPPEL OF WMCO.
7).ALL PROTECTIVE CLOTHING, RESPIRATORY EQPT. ETC MUST BE WORN.
8).NO FUNDING FOR CERCLA,FSAR, OR OTHER REGULATORY PROGRAMS INCLUDED.
9) WORK TO BE DONE BY A FIXED PRICE CONTRACTOR AND SUBCONTRACTORS.
10).WORK SCHEDULE IS FIRST SHIFT,ON A 4DAY/WEEK,10 HR./DAY(40 HR. BASIS)
11).DECON TRAILERS NOT PROVIDED. USE EXISTING SITE FACILITIES.
12).LONG TERM MONITORING COSTS NOT INCLUDED IN THIS OPTION.
13)ESCALATION ASSUMES MIDPOINT OF CONSTRUCTION AS FY 95-3.

DRAFT

SUMMARY OF COSTS

OP. UNIT #1. ALTERNATE 4A

REMOVAL, SLUDGE TREATMENT AND ON-SITE DISPOSAL

LONGTERM REMEDIAL OPERATING COSTS

ITEM	TOTAL COST
LONG TERM OPERATING COST	$19,521,600
TOTAL	19,521,600

DECONTAMINATE & DISPOSAL COSTS.

ITEM	TOTAL COST*
BATCH PLANT DECONTAMINATION & DISPOSAL CO	$467,484
OTHER COSTS	$244,027
TOTAL BATCH PLANT DECONTAMINATE & DISPOS	711,511
PIT DREDGING:	-
DECONTAMINATE DREDGE	$1,000
LSA	$5,000
OTHER COSTS	$3,378
TOTAL PIT DREDGING DECONTAMINATE & DISPOS	$9,378
SLUDGE & WATER TTREATMENT PLANT	-
REMOVE STRUCTURE FABRIC, SHRED & PKG.	$64,787
DECONTAMINATE THICKENER	$20,637
DECONTAMINATE CLARIFIER	$11,164
DECONTAMINATE MULTI FILTER EQUIPMENT	$507
DECONTAMINATE REVERSE OSMOSIS EQUIPMENT	$1,015
DECONTAMINATE ION EXCHANGE EQUIPMENT	$1,015
DECON TANKS(NON TRTD,800,000 GALS)	$114,688
DECONTAMINATE VACCUM TRAILER	$338
DECONTAMINATE VACCUUM TRUCK	$677
DECONTAMINATE WWTP SLAB	$105,555
DISMANTLE & PACKAGE WWTP STRUCTURE	$64,787
DECONTAMINATE FRONT END LOADER	$507
DECONTAMINATE PUMPS & LINES	$7,443
EXCAVATE BERMED PIPING & CRUSH	$50,747
TINDALL BOXES FOR PIPING & BUILDING COVER	$100,140
OTHER COSTS	$67,281
TOTAL SLUDGE & WATER TREATMENT PLANT D &	$611,287
EXCAVATION DECONTAMINATION & DEMOLITION	$532,700
TOTAL DECONTAMINATION & DISPOSAL COSTS	$1,864,876

*: TOTAL COSTS ARE DIRECT COSTS OF ITEM MULTIPLIED BY FACTOR TO COVER ALL ADD-ONS.

SUMMARY OF COSTS

OP. UNIT #1. ALTERNATE 4A

REMOVAL, SLUDGE TREATMENT AND ON-SITE DISPOSAL

REMEDIAL OPERATING COSTS

ITEM	TOTAL COST
BATCH PLANT:	
FUEL FOR EQUIPMENT	$1,471,680
OPERATORS	$101,058,090
ELECTRICITY	$208,596
HEALTH PHYSICS (20% OF LABOR COST)	$20,211,618
ASH	$3,263,275
CEMENT	$5,672,000
QUALITY ASSURANCE, (5% OF OPERATOR COSTS)	$5,052,905
LSA BOXES	$444,600,000
TOTAL BATCH PLANT OPERATING COSTS	$581,538,164
EXCAVATION COSTS	$29,740,428
PIT DREDGING:	-
FUEL FOR EQUIPMENT	$33,580
OPERATORS	$1,777,054
FUEL FOR WORKLIGHTS	$5,110
HEALTH PHYSICS (20% OF LABOR COST)	$355,411
TOTAL PIT DREDGING OPERATING COSTS	$2,171,155
SEGREGATION & RAW MATERIAL TRANSFER OPER.	-
FUEL FOR EQUIPMENT	$630,720
OPERATORS	$43,310,610
ELECTRICITY	$89,398
HEALTH PHYSICS (20% OF LABOR COST)	$8,662,122
QUALITY ASSURANCE	$2,165,531
TOTALSEGR.& RAW MAT.TRANSFER OPERATING C	$54,858,381
DRUM HANDLING	$163,301
SLUDGE & WATER TREATMENT PLANT	-
RESIN (200 CU.FT) FOR 3 WEEKS	$2,240,000
R.O. MEMBRANE(1 REPLACEMENT)	$108,000
QA/QC WATER ANALYSIS (PER DAY)	$1,496,500
OPERATORS (2 MEN PER SHIFT)	$1,687,795
SPARE PARTS	-
TOTAL SLUDGE & WATER TREATMENT OPERATING	5,532,295
SUBTOTAL OPERATING COST	674,005,724
CONTINGENCY (25%)	168,500,931
TOTAL OPERATING COST	842,504,655

DRAFT

FERNALD PROJECT

I.T.CORP.PROJ.# 303317 ESTIMATOR: F.H.GASLIGHTWALA 11/30/90

COSTS: OP. UNIT 1.- VITRIFICATION,OPERATING COSTS ON-SITE,ALT4B PROJ.ENGR:DARRELL DROUHARD

TYPE OF ESTIMATE:-30%-+50%

FY 91-1 DOLLARS

DESCRIPTION	Qty.	Unit	MAT'L $/UNIT	TOTAL MAN-HRS	$/HR	$ MATERIAL	$ LABOR	1ST OR 2NDT OR EQUPT. R	TOTAL COST
SAND (AVERAGE EACH 24 HRS CONSUMPTION-205 TONS)	299,300	TO	$4	-		$1,197,200	-	-	$1,197,200
SODA ASH (AVERAGE EACH 24 HRS CONSUMPTION-205 T	299,300	TO	$177.33	-		$53,074,869	-	-	$53,074,869
ELECTRICITY(AVERAGE 73,000KWH per hour)	2,557,920,000	KW	$0.038	-		$96,433,584	-	-	$96,433,584
ELECTRODES (AVERAGE PER 24 HRS)	1,460	DA	$755	-		$1,102,300	-	-	$1,102,300
OPERATORS	1,460	LS	-	700,800	$33.81	-	$23,694,048		$23,694,048
CONCRETE BOXES(BASES)	15,590	EA	$3,000	-		$46,770,000	-	-	$46,770,000
CONCRETE BOXES(RISERS)	31,180	EA	$4,650	-		$144,987,000	-	-	$144,987,000
CONCRETE BOXES(LIDS)	15,590	EA	$2,500			$38,975,000	-	-	$38,975,000
TUMULUS	1,744,925	YD3	$190	1,958,594		$331,535,750	-	-	$331,535,750
HEALTH PHYSICS (20% OF LABOR)							$4,738,810		$4,738,810
SUBTOTAL				2,659,394		$714,075,703	$28,432,858		$742,508,561
QUALITY ASSURANCE (3% OF TOTAL O & M)								$22,275,257	$22,275,257
SUBTOTAL				2,659,394		$714,075,703	$28,432,858	$22,275,257	$764,783,818
ESCALATION (56.5%)				-		$402,024,621	$16,007,699	$12,540,970	$430,573,290
TOTAL				2,659,394		$1,116,100,324	$44,440,557	$34,816,227	$1,195,357,108

DRAFT

FERNALD PROJECT 12/07/90

I.T.CORP.PROJ.# 303317 ESTIMATOR: F.H.GASLIGHTWALA

COSTS: OP. UNIT 1.- BATCH PLANT, OPERATING COSTS , OFF SITE PROJ.ENGR:SCOTT McCOMB

TYPE OF ESTIMATE:-30%-+50%

FY 91-1 DOLLARS

DESCRIPTION	Qty.	Unit	MAT'L $/UNIT	M.H. /UNIT	TOTAL MAN-HRS	$/HR	$ MATERIAL	$ LABOR	1ST OR 2ND TIE	TOTAL COST
FUEL FOR EQUIPMENT	1,471,680	GA	$1				$1,471,680			$1,471,680
OPERATORS					2,363,200	$33.81		$79,899,792		$79,899,792
ELECTRICITY	2,744,683	KW	$0.076				$208,596			$208,596
HEALTH PHYSICS (20% OF LABOR COST)					319,599			$15,979,958		$15,979,958
ASH	326,527,520	LBS	$0.010				$3,265,275			$3,265,275
CEMENT	141,800,000	LBS	$0.040				$5,672,000			$5,672,000
TRANSPORTATION	1	LS	-				$382,536,000			$382,536,000
QUALITY ASSURANCE	1	LS	-				-	$3,994,990		$3,994,990
LSA BOXES	741,000	LS	$600				$444,600,000			$444,600,000
OFFSITE DISPOSAL	42,637,590	FT3	$8				$341,100,720			$341,100,720
SUBTOTAL					2,682,799		$1,178,852,271	$99,874,740		$1,278,727,011
ESCALATION (0%)	1	LS	-				$0	$33,058,539		$33,058,539
TOTAL					2,682,799		$1,178,852,271	$132,933,279		$1,311,785,550

FERNALD PROJECT 12/07/90

I.T.CORP.PROJ.# 303317 ESTIMATOR: F.H.GASLIGHTWALA

COSTS: OP. UNIT 1.- BATCH PLANT, D. & D.COSTS , OFF SITE PROJ.ENGR:SCOTT McCOMB

TYPE OF ESTIMATE:-30%-+50%

FY 91-1 DOLLARS

DESCRIPTION	Qty.	Unit	MAT'L $/UNIT	M.H. /UNIT	TOTAL MAN-HRS	$/HR	$ MATERIAL	$ LABOR	1ST OR 2ND TIE	TOTAL COST
DECONTAMINATE & DISPOSE	1	LS	-				$359,710	-		$359,710
SUBTOTAL					0		$359,710	-		$359,710
ESCALATION (52.2%)	1	LS	-				$187,769	-		$187,769
TOTAL					0		$547,479	-		$547,479

SUMMARY OF COSTS

07-Dec-90

OP. UNIT #1. ALTERNATE 5A

REMOVAL, SLUDGE TREATMENT AND OFF-SITE DISPOSAL

REMEDIAL OPERATING COSTS

ITEM	TOTAL COST*
FUEL FOR EQUIPMENT	1,471,680
OPERATORS	$79,899,792
ELECTRICITY	208,596
HEALTH PHYSICS (20% OF LABOR COST)	$15,979,958
ASH	$3,263,275
CEMENT	$5,672,000
TRANSPORTATION	$382,536,000
QUALITY ASSURANCE	$3,994,990
LSA BOXES	$444,600,000
OFFSITE DISPOSAL COSTS	$341,100,720
SUBTOTAL	$1,278,727,011
TOTAL BATCH PLANT OPERATING COSTS	$1,278,727,011
EXCAVATION COSTS	$29,740,428
PIT DREDGING:	-
FUEL FOR EQUIPMENT	33,580
OPERATORS	1,777,054
FUEL FOR WORKLIGHTS	5,110
HEALTH PHYSICS (20% OF LABOR COST)	355,411
OTHER COSTS	796,814
TOTAL PIT DREDGING OPERATING COSTS	$2,967,969
SEGREGATION & RAW MATERIAL TRANSFER OPER. C	-
FUEL FOR EQUIPMENT	630,720
OPERATORS	$34,242,768
ELECTRICITY	89,398
HEALTH PHYSICS (20% OF LABOR COST)	$6,848,554
QUALITY ASSURANCE	$1,712,138
OTHER COSTS	$14,406,304
TOTAL SEGR. & RAW MAT.TRANSFER OPERATING COS	$57,929,882
DRUM HANDLING	$163,301
SLUDGE & WATER TREATMENT PLANT	-
RESIN (200 CU.FT) FOR 3 WEEKS	$2,240,000
R.O. MEMBRANE(1 REPLACEMENT)	$108,000
QA/QC- WATER ANALYSIS (PER DAY)	$1,496,300
OPERATORS (2 MEN PER SHIFT)	$1,687,795
SPARE PARTS	-
OTHER COSTS	1,831,190
TOTAL SLUDGE & WATER TREATMENT OPERATING C	7,363,485
SUBTOTAL OPERATING COSTS	1,376,892,076
CONTINGENCY	$44,223,019
TOTAL OPERATING COSTS	1,721,115,095

FERNALD PROJECT

I.T.CORP.PROJ.# 303317 ESTIMATOR: F.H.GASLIGHTWALA 12/04/90

COSTS: OP. UNIT 1.- VITRIFICATION,OPERATING COSTS OFF-SITE.ALT5B PROJ.ENGR:DARRELL DROUHARD

TYPE OF ESTIMATE: 50% -+50%

FY 91-1 DOLLARS

DESCRIPTION	Qty.	Unit	MAT'L $/UNIT	TOTAL MAN-HRS	$/HR	$ MATERIAL	$ LABOR	1ST OR 2NDTI OR EQUPT. R	TOTAL COST
SAND (AVERAGE EACH 24 HRS CONSUMPTION-203 TONS)	299,300	TO	$4	-		$1,197,200	-	-	$1,197,200
SODA ASH (AVERAGE EACH 24 HRS CONSUMPTION-205 T	299,300	TO	$177.33	-		$53,074,869	-	-	$53,074,869
ELECTRICITY(AVERAGE 75,000KWH per hour)	2,557,920,000	KW	$0.038	-		$96,435,584	-	-	$96,435,584
ELECTRODES (AVERAGE PER 24 HRS)	1,460	DA	$755	-		$1,102,300	-	-	$1,102,300
OPERATORS	1,460	LS	-	560,640	$33.81		$18,955,238		$18,955,238
LSA BOXES	422,600	EA	$600	-		$253,560,000	-	-	$253,560,000
HEALTH PHYSICS (20% OF LABOR)				75,821	$50.00		$3,791,048		$3,791,048
SUBTOTAL				636,461		$405,367,953	$22,746,286	-	$428,114,239
QUALITY ASSURANCE (3% OF TOTAL O. & M.)				-				$12,843,427	$12,843,427
SUBTOTAL				636,461		$405,367,953	$22,746,286	$12,843,427	$440,957,666
SHIP LSA BOXES OFF-SITE	2,493,340	TO	$96	-		$239,360,640	-		$239,360,640
BURIAL COSTS - NON MIXED WASTE	38,676,352	CFT	$8	-		$309,410,816	-		$309,410,816
BURIAL COSTS - MIXED WASTE	1,893,248	CFT	$34	-	-	$64,370,432	-		$64,370,432
SUBTOTAL				636,461		$1,018,509,841	$22,746,286	$12,843,427	$1,054,099,554
ESCALATION (56.5%)				-		$785,474,789	$12,806,159	$7,230,849	$593,458,049
TOTAL COSTS				636,461		$1,803,984,630	$35,552,445	$20,074,276	$1,839,611,351

DRAFT

FERNALD PROJECT

11/25/90

I. T.PROJECT NO.:303317 OP.UNIT #1

ESTIMATOR: F.H.GASLIGHTWALA

DRUM HANDLING- OPTION 4A.

PROJ.ENGR:KEN STIER

TYPE OF ESTIMATE:-30%→30%

PROJ. MGR.DAVID HARMER

FY 91-1 DOLLARS

DESCRIPTION	Qty.	Unit	MAT'L $/UNIT	MAN-HR /UNIT	TOTAL MAN-HRS	RATE	$ MATERIAL	$ LABOR	1ST OR 2ND TIER EQUP. RNTL	TOTAL COST
CARRY FORWARD					9,100		$1,949,650	$47,861	$352,803	$2,350,313
DECONTAMINATE & DISASSEMBLE SYSTEM					1,600		-	-	$160,000	$160,000
SUBTOTAL COSTS					10,700	-	$1,949,650	$47,861	$512,803	$2,510,313
CONTINGENCY 25%						-	$487,413	$11,965	$128,201	$627,579
TOTAL ESTIMATED COSTS					10,700	-	$2,437,063	$59,827	$641,004	$3,137,893
ESCALATION FOR THIS ALTERNATE,(13.4%)(/13)					-	-	$326,566	$8,017	$85,895	$420,478
TOTAL ESTIMATED COSTS, (CAPITAL)					10,700	-	$2,763,629	$67,844	$726,899	$3,558,371

NOTES:
1).INCL.ALL CONSTRUCTION PERSONNEL SAFETY TRAINING PER OSHA REQMTS.
2).HEALTH PHYSICS FACTOR 20%PER RAY ROPPEL OF WMCO.
3).THIS IS FOR CERCLA & PERSONNEL PROTECTION REQUIREMENTS
4).2ND & 3RD TIER CONTRACTOR MARKUP TO PRIME 5%
5).PRIME CONTRACTOR'S MARKUP 20%. OF HIS MATERIAL & LABOR COSTS.
6).RUST MANAGEMENT FEE PER RAY ROPPEL OF WMCO.
7).ALL PROTECTIVE CLOTHING, RESPIRATORY EQPT. ETC MUST BE WORN.
8).NO FUNDING FOR CERCLA,FSAR, OR OTHER REGULATORY PROGRAMS INCLUDED.
9) WORK TO BE DONE BY A FIXED PRICE CONTRACTOR AND SUBCONTRACTORS.
10).WORK SCHEDULE IS FIRST SHIFT,ON A 4DAY/WEEK,10 HR./DAY(40 HR. BASIS)
11).DECON TRAILERS NOT PROVIDED. USE EXISTING SITE FACILITIES.
12).LONG TERM MONITORING COSTS NOT INCLUDED IN THIS OPTION.
13)ESCALATION ASSUMES MIDPOINT OF CONSTRUCTION AS FY 93-3.

DRAFT

FERNALD PROJECT

I. T.PROJECT NO.:303317 OP.UNIT #1

DRUM HANDLING-OPTION 4A, 5A

TYPE OF ESTIMATE:-30%→50%

FY 91-1 DOLLARS

11/26/90

ESTIMATOR: F.H.GASLIGHTWALA

PROJ.ENGR:KEN STIER

PROJ. MGR.DAVID HARMER

DESCRIPTION	Qty.	Unit	MAT'L $/UNIT	MAN-HR /UNIT	TOTAL MAN-HRS	$/HR	$ MATERIAL	$ LABOR	1ST OR 2ND TIER OR EQUP. RNTL	TOTAL COST
REINFORCED CONCRETE PAD 50' X 50' X 9"THICK	70	YDS	$50	0.492	34	$24.41	$3,500	$830		$4,330
360 DEGREE ROTATING DRUM HANDLER ATTACHMENT	2	EA	$16,120				$32,240			$32,240
CATERPILLAR 235C HYDRAULIC EXCAVATOR	2	EA	$315,000				$630,000			$630,000
ENVIRONMENTAL CAB FOR CATERPILLAR 235C EXCAVATOR	2	EA	$5,500				$11,000			$11,000
C2-U555 2 PIECE MATERIAL HANDLING FRONT	2	EA	$66,500				$133,000			$133,000
DRUM OVERPACKS-55 GALLON CAPACITY	500	EA	$47.75	1	500	$24.41	$23,875	$12,205		$36,080
FORKLIFT-6,000 LBS CAPACITY, 20'LIFT, SOLID TIRES	1	EA	$30,000	16	16	$24.41	$30,000	$391		$30,391
FORKLIFT ATTACHMENT-HERCULES IND.,2 DRUM CAPACITY.	1	EA	$345	8	8	$24.41	$345	$195		$540
SUB-TOTAL			433,563		558		$863,960	$13,621		$877,581
PRODUCTIVITY FACTOR(17% ADD TO MANHOURS & DOLLARS) (#					95	$24.41		$2,319		$2,319
RENTAL EQUIPMENT MANHOURS					88	$26.75		$2,352	$3,520	$5,872
TOTAL	1	LS			741		$863,960	$18,292	$3,520	$885,772
INDIRECTS:	1	LS								
SMALL TOOLS (3% OF TOTAL COSTS)	1	LS			-				$26,573	$26,573
CLEAN UP LABOR (3% OF TOTAL COSTS)	1	LS			1,209				$26,573	$26,573
TEMP. SERV. & FAC. (5% OF TOTAL COSTS)	1	LS							$44,289	$44,289
FIELD STAFF (4% OF TOTAL COSTS)	1	LS			1,865				$35,431	$35,431
SCAFFOLDING (2% OF TOTAL COSTS)	1	LS			712				$17,715	$17,715
SUBTOTAL PROJECT COSTS					4,527		$863,960	$18,292	$154,101	$1,036,353
HEALTH PHYSICS (20% OF LABOR & S/C COSTS) (#2)					690			$3,658	$30,820	$34,479
SALES TAX (5.5% OF MATERIAL COSTS)							$47,518	-	-	$47,518
SUBTOTAL					5,217		$911,478	$21,950	$184,921	$1,118,350
CERCLA REQMTS & PERSONNEL PROTECTION(12% OF TOTAL COS					331		$109,377	$2,634	$22,191	$134,202
BOND(3%)							$27,344	$659	$5,548	$33,551
SUBTOTAL					5,548		$1,048,199	$25,243	$212,660	$1,286,103
MARKUP BY GENERAL CONTRACTOR ON 2ND & 3RD TIER CONTR.									$10,633	$10,633
PROFIT OF PRIME CONTRACTOR (20%) (#5)							$209,640	$5,049	-	$214,689
SUBTOTAL					5,548		$1,257,839	$30,292	$223,293	$1,511,425
CONSTRUCTION MANAGEMENT FEE (24% OF TOTAL COSTS) (#6)							$301,881	$7,270	$53,590	$362,741
SUBTOTAL					5,548		$1,559,720	$37,562	$276,883	$1,874,166
FSAR (SAFETY REPORT),(3% OF LABOR & S/C COSTS BEFORE FEES)					76			$909	$6,699	$7,608
EMISSIONS MODELING,(3% OF TOTAL COST BEFORE FEES)					455		$37,753	$909	$6,699	$45,545
PROJ.MGMT -WMCO- (8%OF COSTS EXCL. RUST FEE)							$100,627	$2,423	$17,863	$120,913
ENGINEERING (20% (TITLE 1 & 2) OF COST EXCL ALL FEES)					3,023		$251,568	$6,058	$44,659	$302,285
SUBTOTAL					9,100		$1,949,650	$47,861	$352,803	$2,350,315

FERNALD PROJECT

I.T.CORP.PROJ.# 503317 ESTIMATOR: F.H.GASLIGHTWALA 11/30/90

COSTS: OP. UNIT 1.- VITRIFICATION, ON-SITE, D & D, ALT4B PROJ.ENGR:DARRELL DROUHARD

TYPE OF ESTIMATE:-50%→50%

FY 91-1 DOLLARS

DESCRIPTION	Qty.	Unit	MAT'L $/UNIT	TOTAL MAN-HRS	$/HR	$ MATERIAL	$ LABOR	1ST OR 2NDTI OR EQUPT. R	TOTAL COST
CUTUP, BREAKUP, VITRIFIER EQUPT..LOAD IN DISPOSAL	1	LS		1,870	$50.00		$93,500	_	$93,500
D & D SC 1020 BASES FOR RUBBLE DISPOSAL	22	EA	$3,000			$66,000		_	$66,000
D & D SC 1020 RISERS FOR RUBBLE DISPOSAL	44	EA	$4,650			$204,600		_	$204,600
D & D SC 1020 LIDS FOR RUBBLE DISPOSAL	22	EA	$2,500			$55,000		_	$55,000
TUMULUS	2462	YDS	$190	2,756		$467,780		_	$467,780
DECONTAMINATE BUILDING & CONCRETE PAD	1	LS		3,500	$50.00		$175,000	_	$175,000
DECONTAMINATE TRUCKS	1	LS		12	$50.00		$600	_	$600
DECONTAMINATE CRANES	1	LS		12	$50.00		$600	_	$600
SUBTOTAL				8,130		$793,380	$269,700	-	$1,063,080
PRODUCTIVITY FACTOR(17% ADD TO MHRS. & DOLLARS		LS		1,382	$26.75		$36,941	-	$36,941
EQUIPMENT RENTAL HOURS	1	LS		1,220	$26.75		$32,611	-	$32,611
SUBTOTAL				10,732		$793,380	$339,252	-	$1,132,632

DRAFT

FERNALD PROJECT

I.T.CORP.PROJ.# 303317 ESTIMATOR: F.H.GASLIGHTWALA 11/30/90

COSTS: OP. UNIT 1.- VITRIFICATION, ON-SITE, D & D, ALT4B PROJ.ENGR:DARRELL DROUHARD

TYPE OF ESTIMATE:-30%→30%

FY 91-1 DOLLARS

DESCRIPTION	Qty.	Unit	MAT'L $/UNIT	TOTAL MAN-HRS	$/HR	$ MATERIAL	$ LABOR	1ST OR 2ND/TI OR EQUPT. R	TOTAL COST
CARRYOVER FROM PREVIOUS PAGE				10,752		$795,580	$339,252	-	$1,132,632
INDIRECTS:	1	LS							
SMALL TOOLS (3% OF TOTAL COSTS)	1	LS			-			$33,979	$33,979
CLEAN UP LABOR (3% OF TOTAL COSTS)	1	LS		1,546				$33,979	$33,979
TEMP. SERV. & FAC. (5% OF TOTAL COSTS)	1	LS						$56,632	$56,632
FIELD STAFF (4% OF TOTAL COSTS)	1	LS		2,584				$45,305	$45,305
SCAFFOLDING (2% OF TOTAL COSTS)	1	LS		910				$22,653	$22,653
SUBTOTAL PROJECT COSTS				15,572		$795,580	$339,252	$192,548	$1,325,180
HEALTH PHYSICS (20% OF LABOR & S/C COSTS)				2,127			$67,850	$38,510	$106,360
SALES TAX (5.5% OF MATERIAL COSTS)						$43,636		-	-
SUBTOTAL				17,699		$1,244,118	$407,102	$231,058	$1,882,278
CERCLA REQMTS & PERSONNEL PROTECTION(12% OF TO				1,391			$48,852	$27,727	$76,579
BOND(3%)						$37,324	$12,213	$6,932	$56,469
SUBTOTAL				19,090		$1,281,442	$468,167	$265,717	$2,015,326
MARKUP BY GENERAL CONTRACTOR ON 2ND & 3RD TIE								$13,286	$13,286
PROFIT OF PRIME CONTRACTOR (20%)						$256,288	$93,633		-
SUBTOTAL				19,090		$1,537,730	$561,800	$279,003	$2,378,533
FSAR (SAFETY REPORT),(3% OFLABOR & S/CCOSTS BEFO				252			$16,854	$8,370	$25,224
EMISSIONS MODELING,(3% OF TOTAL COST BEFORE FEE				714		$46,132	$16,854	$8,370	$71,356
SUBTOTAL				20,056		$1,583,862	$595,508	$295,743	$2,475,113
ESCALATION(77.12%)				-		$1,221,474	$459,256	$228,077	$1,908,807
TOTAL				20,056		$2,805,336	$1,054,764	$523,820	$4,383,920

DRAFT

SUMMARY OF COSTS 28-Nov-90

OP. UNIT #1. ALTERNATE 5A

REMOVAL. SLUDGE TREATMENT AND OFF-SITE DISPOSAL

DECONTAMINATE & DISPOSAL COSTS.

ITEM	TOTAL COST*
BATCH PLANT DECONTAMINATION & DISPOSAL COS	$447,184
OTHER COSTS	$232,536
TOTAL BATCH PLANT DECON.& DISPOSAL COSTS	$679,720
PIT DREDGING:	-
DECONTAMINATE DREDGE	$1,000
LSA	$5,000
OTHER COSTS	$3,378
TOTAL PIT DREDGING DECONTAMINATION & DISPOS	$9,378
SLUDGE & WATER TTREATMENT PLANT	-
REMOVE STRUCTURE FABRIC. SHRED & PKG.	$64,787
DECONTAMINATE THICKENER	$20,637
DECONTAMINATE CLARIFIER	$11,164
DECONTAMINATE MULTI FILTER EQUIPMENT	$507
DECONTAMINATE REVERSE OSMOSIS EQUIPMENT	$1,015
DECONTAMINATE ION EXCHANGE EQUIPMENT	$1,015
DECON TANKS(NON TRTD,800,000 GALS)	$114,688
DECONTAMINATE VACCUM TRAILER	$338
DECONTAMINATE VACCUUM TRUCK	$677
DECONTAMINATE WWTP SLAB	$105,553
DISMANTLE & PACKAGE WWTP STRUCTURE	$64,787
DECONTAMINATE FRONT END LOADER	$507
DECONTAMINATE PUMPS & LINES	$7,443
EXCAVATE BERMED PIPING & CRUSH	$50,747
TINDALL BOXES FOR PIPING & BUILDING COVER	$100,140
OTHER COSTS	$67,281
TOTAL SLUDGE & WATER TRTMNT PLANT D. & D.CO	$611,287
EXCAVATION DECONTAMINATE & DISPOSAL COSTS	$532,700
TOTAL DECONTAMINATE & DISPOSAL COSTS	$1,833,085

* TOTAL COSTS ARE DIRECT COSTS OF ITEM MULTIPLIED BY FACTOR TO COVER ALL ADD-ONS.

DRAFT

FERNALD PROJECT

I.T.CORP.PROJ.# 303317 — ESTIMATOR: F.H.GASLIGHTWALA — 12/04/90

COSTS: OP. UNIT 1.- VITRIFICATION, OFF-SITE,D & D, ALT5B — PROJ.ENGR:DARRELL DROUHARD

TYPE OF ESTIMATE:-30%→50%

FY 91-1 DOLLARS

DESCRIPTION	Qty.	Unit	MAT'L $/UNIT	TOTAL MAN-HRS	$/HR	$ MATERIAL	$ LABOR	1ST OR 2NDTI OR EQUPT. R	TOTAL COST
CUTUP, BREAKUP, VITRIFIER EQUPT.,LOAD IN DISPOSAL	1	LS		1,870	$50.00		$93,500	-	$93,500
DECONTAMINATE BUILDING & CONCRETE PAD	1	LS		3,500	$50.00		$175,000	-	$175,000
LSA BOXES FOR RUBBLE DISPOSAL	1038	EA	$600	-	-	$622,800	-	-	$622,800
SHIP LSA BOXES OFF SITE	3,708	TO	$92	-	-		-	$341,136	$341,136
OFF-SITE BURIAL	99,648	CFT	$8	-	-		-	$797,184	$797,184
DECONTAMINATE FORKLIFTS	4	EA		4	$50.00		$200	-	$200
SUBTOTAL				5,374		$622,800	$268,700	$1,138,320	$2,029,820
PRODUCTIVITY FACTOR(17% ADD TO MANHOURS & DOL		LS		914	$26.73		$24,431	-	$24,431
EQUIPMENT RENTAL HOURS	1	LS		806	$26.73		$21,544	-	$21,544
SUBTOTAL				7,094		$622,800	$314,675	$1,138,320	$2,075,795

FERNALD PROJECT

I.T.CORP.PROJ.# 303317 — ESTIMATOR: F.H.GASLIGHTWALA — 12/04/90

COSTS: OP. UNIT 1.- VITRIFICATION, OFF-SITE,D & D, ALT5B — PROJ.ENGR:DARRELL DROUHARD

TYPE OF ESTIMATE:-30%→50%

FY 91-1 DOLLARS

DESCRIPTION	Qty.	Unit	MAT'L $/UNIT	TOTAL MAN-HRS	$/HR	$ MATERIAL	$ LABOR	1ST OR 2NDTI OR EQUPT. R	TOTAL COST
CARRYOVER FROM PREVIOUS PAGE				7,094		$622,800	$314,675	$1,138,320	$2,075,795
INDIRECTS:	1	LS							
SMALL TOOLS (3% OF TOTAL COSTS)	1	LS			-			$62,274	$62,274
CLEAN UP LABOR (3% OF TOTAL COSTS)	1	LS		2,833				$62,274	$62,274
TEMP. SERV. & FAC. (3% OF TOTAL COSTS)	1	LS						$103,790	$103,790
FIELD STAFF (4% OF TOTAL COSTS)	1	LS		6,570				$83,032	$83,032
SCAFFOLDING (2% OF TOTAL COSTS)	1	LS		1,669				$41,516	$41,516
SUBTOTAL PROJECT COSTS				15,966		$622,800	$314,675	$1,491,206	$2,428,681
HEALTH PHYSICS (20% OF LABOR & S/C COSTS)				7,224			$62,935	$298,241	$361,176
SALES TAX (5.5% OF MATERIAL COSTS)						$34,254		-	-
SUBTOTAL				23,190		$1,034,664	$377,610	$1,789,447	$3,201,721
CERCLA REQMTS & PERSONNEL PROTECTION(12% OF TO				6,330			$45,313	$214,734	$260,047
BOND(3%)						$31,040	$11,328	$53,683	$96,051
SUBTOTAL				29,520		$1,065,704	$434,251	$2,057,864	$3,557,819
MARKUP BY GENERAL CONTRACTOR ON 2ND & 3RD TIE								$102,893	$102,893
PROFIT OF PRIME CONTRACTOR (20%)						$213,141	$86,850		-
SUBTOTAL				29,520		$1,278,845	$521,101	$2,160,757	$3,960,703
FSAR (SAFETY REPORT),(3% OF LABOR & S/C COSTS BEF				805			$15,633	$64,823	$80,456
EMISSIONS MODELING,(3% OF TOTAL COST BEFORE FEE				1,188		$38,365	$15,633	$64,823	$118,821
SUBTOTAL				31,513		1,317,210	552,367	2,290,405	$4,159,980
ESCALATION (77.12%)				-		$1,015,832	$425,985	$1,766,359	$3,208,176
TOTAL COSTS				31,513		$2,333,042	$978,352	$4,056,762	$7,368,156